DRAWING NO.	FEATURE
171651-01	--------
171651-11	1B1 12D
171651-12	1B1 78J
171651-15	265 12D
171651-16	265 78J

RELEASE	REV	DATE	DWG NO
	A		171651

REV	ZONE	REVISION RECORD	DATE	DFTR-ORIG

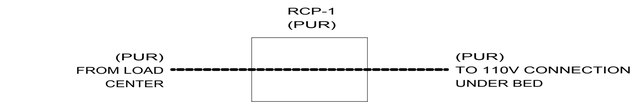

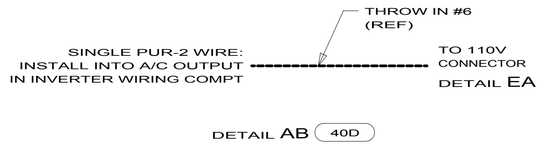

DETAIL AB 40D

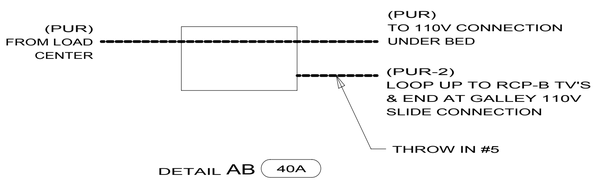

DETAIL AB 40A

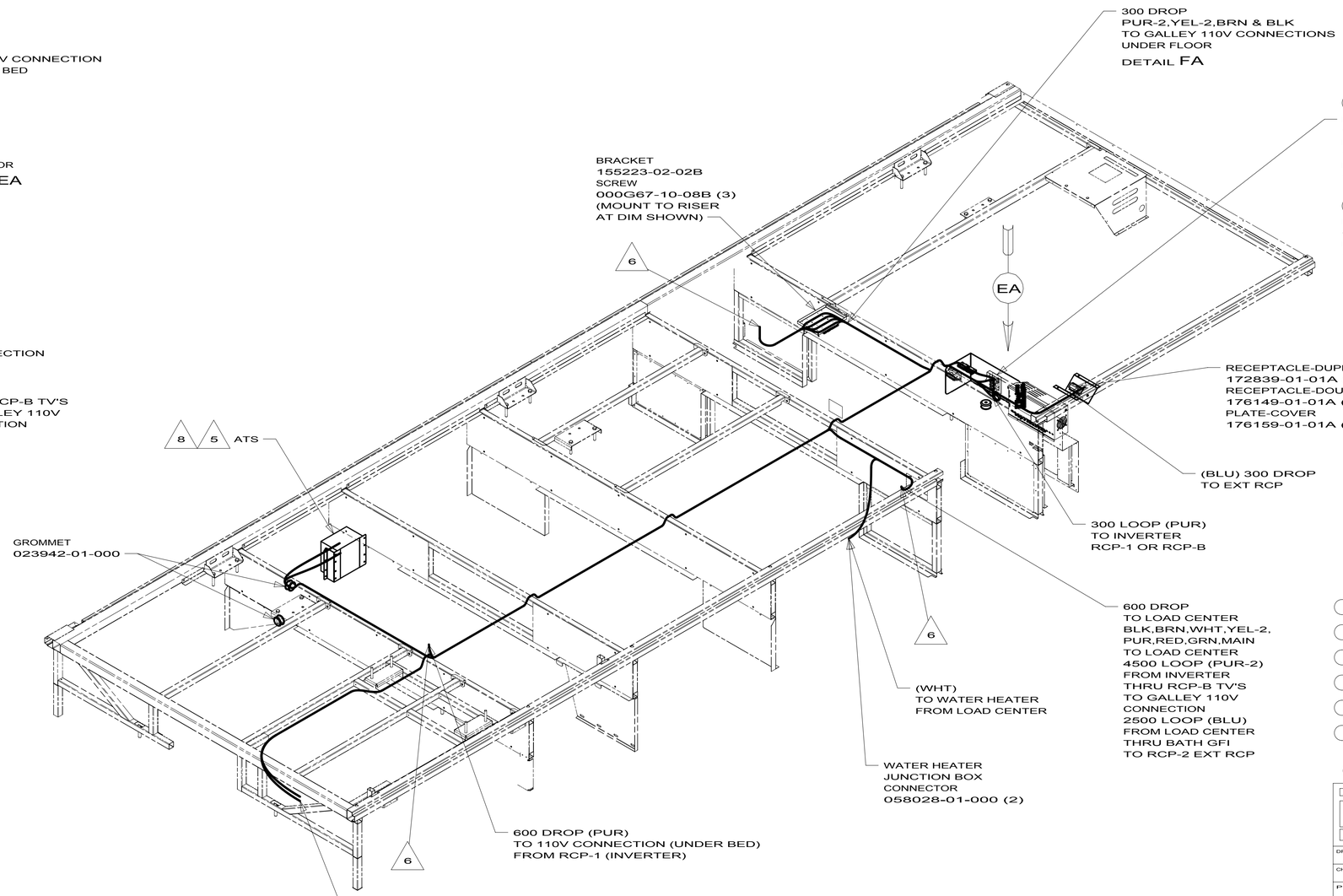

12D	ELECTRICAL SYSTEM 30 AMP
40D	INVERTER-DC/AC,400 WATT
40A	INVERTER-DC/AC WITHOUT
78J	ELECTRICAL SYSTEM-50 AMP
265	CODES/STANDARDS-CSA/CMVSS
1B1	CODES/STANDARDS USA

1B1 265 78J 12D

8. MOUNT ATS AS HIGH AS POSSIBLE IN COMPARTMENT. ROUTE GROUND CABLE WITH GENERATOR WIRES THROUGH PANEL & CONNECT TO FRAME RAIL GROUND.

7. MOUNT 4X4 BOX ON CLOSEOUT PANEL OVER HOLE.

6. WIRE PASSES THROUGH FLOOR AT THIS POINT.

5. SEE LOAD CENTER/ATS ASM FOR ADDITIONAL INFORMATION.

4. SEE WIRING DIAGRAM-BODY,110V FOR ADDITIONAL INFORMATION.

3. ALL GROUND WIRE TO BE COVERED WITH TUBING 008041-02-000.

2. ALL 110V WIRE TO BE CLAMPED WITH CLAMP 010497-05-000 WITHIN 200MM OF OUTLET BOXES, USE SCREW 000G67-10-12B.

1. ALL WIRES TO BE SECURED WITH CLAMP 010495-01-000 OR CLIP 080734-01-000 EVERY 600MM. USE SCREW 000G67-10-12B UNLESS OTHERWISE SPECIFIED.

NOTES:

X-X

FOR ELECTRICAL CALLOUTS SEE DWG NO. 121339-01-000

FOR ELECTRICAL TORQUE SPECIFICATIONS SEE DWG NO. 128783-01-000

COPYRIGHT 2010
WINNEBAGO
INDUSTRIES, INC.

DFTR	ORIG. DATE
CHKR	ALL DIMENSIONS ARE IN MILLIMETERS
P.E.	
M.E.	FIRST USED
DSNR	10 J32H

UNSPECIFIED TOLERANCES ARE:			MATERIAL:
WHOLE DIM (X)	±	3	
ONE-PLACE (X.X)	±	1.5	
TWO-PLACE (X.XX)	±	0.50	
ANGLE	±	1°	

THIRD ANGLE PROJECTION

DO NOT SCALE DRAWING

TITLE: WIRING INSTL-BODY,110V

SHEET 1 OF 6 | PART NO 171651 | REV

REF: 1

3/3/2010

DWG NO 171651

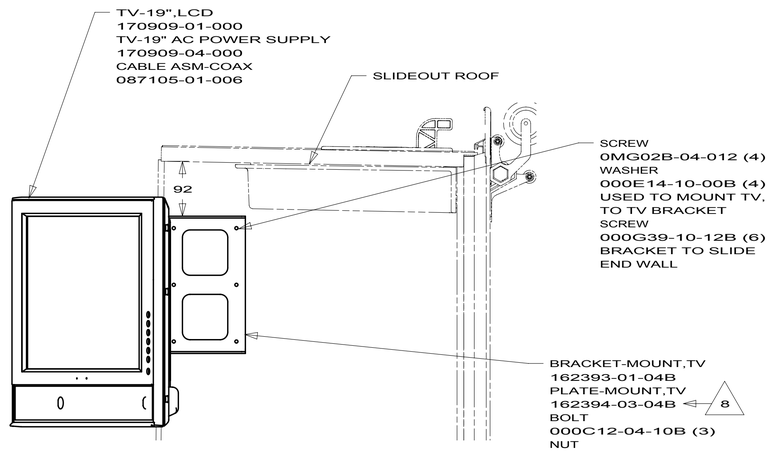

VIEW BB

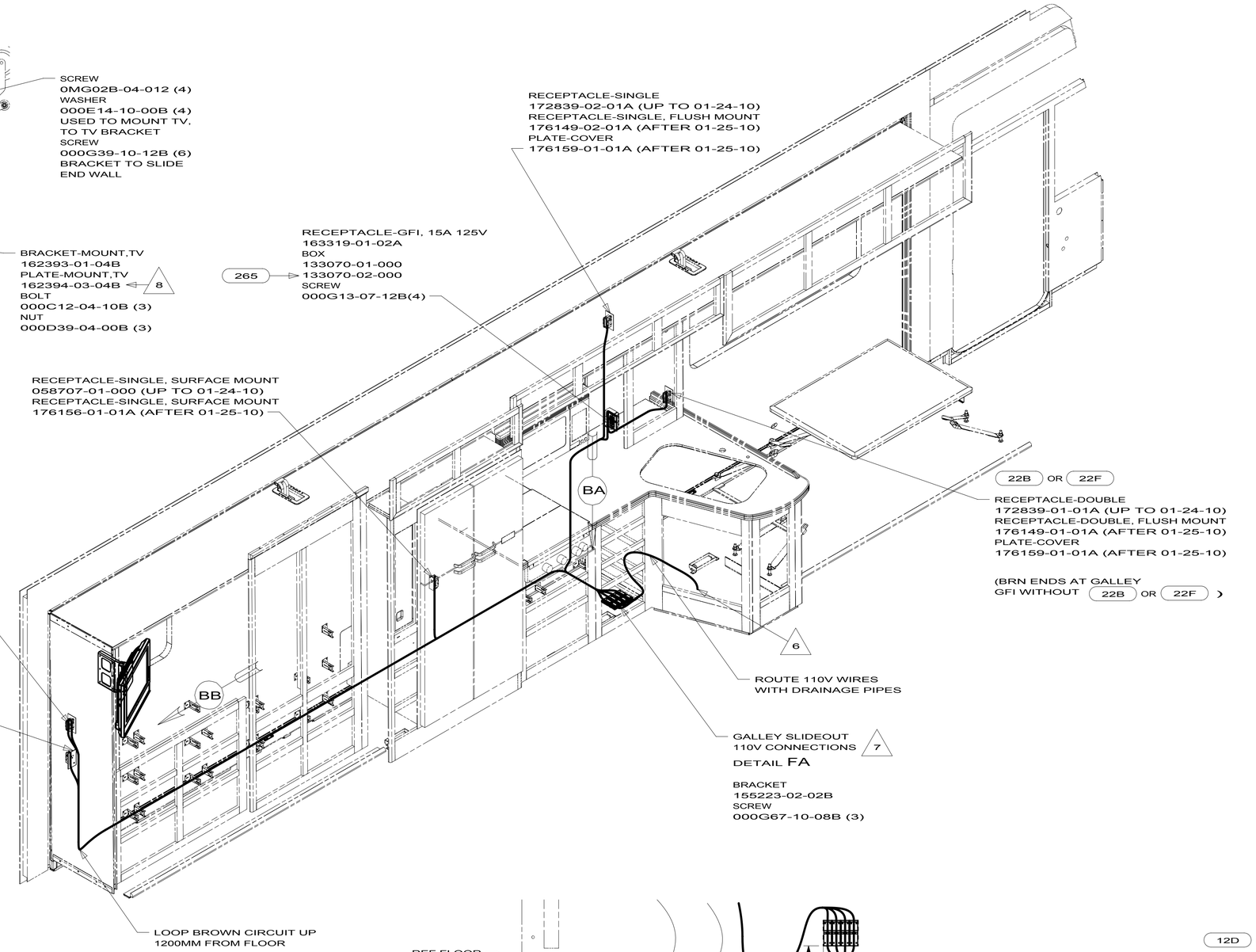

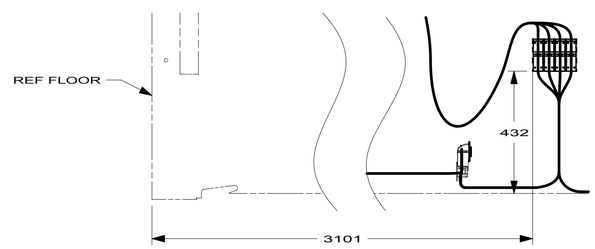

DETAIL BA

8 CLEAN AND APPLY ADHESIVE PROMOTER 900680-04-000 TO BOTH SURFACES AND BOND WITH TAPE 076322-23-000 (900MM) AROUND ENTIRE PERIMETER OF BRACKET

7 LOCATING DIMENSION SEE DETAIL BA

6 WIRE ROUTED THROUGH FLOOR AT THIS POINT.

5 SEE LOAD CENTER/ATS ASM FOR ADDITIONAL INFORMATION.

4. SEE WIRING DIAGRAM-BODY,110V FOR ADDITIONAL INFORMATION.

3. ALL GROUND WIRE TO BE COVERED WITH TUBING 008041-02-000.

2. ALL 110V WIRE TO BE CLAMPED WITH CLAMP 010497-05-000 WITHIN 200MM OF OUTLET BOXES, USE SCREW 000G67-10-12B.

1. ALL WIRES TO BE SECURED WITH CLAMP 010495-01-000 OR CLIP 080734-01-000 EVERY 600MM. USE SCREW 000G67-10-12B UNLESS OTHERWISE SPECIFIED.

NOTES:

X-X

FOR ELECTRICAL CALLOUTS SEE DWG NO. 121339-01-000

FOR ELECTRICAL TORQUE SPECIFICATIONS SEE DWG NO. 128783-01-000

12D	ELECTRICAL SYSTEM 30 AMP
22F	DINETTE, U-SHAPED ULTRALEATH
22B	DINETTE - U-SHAPED
78J	ELECTRICAL SYSTEM-50 AMP
265	CODES/STANDARDS-CSA/CMVSS
1B1	CODES/STANDARDS USA

1B1 265 78J 12D

FIRST USED 10 J32H

DO NOT SCALE DRAWING

TITLE: WIRING INSTL-BODY,110V

SHEET 2 | PART NO 171651 | REV

3/3/2010

DWG NO 171651

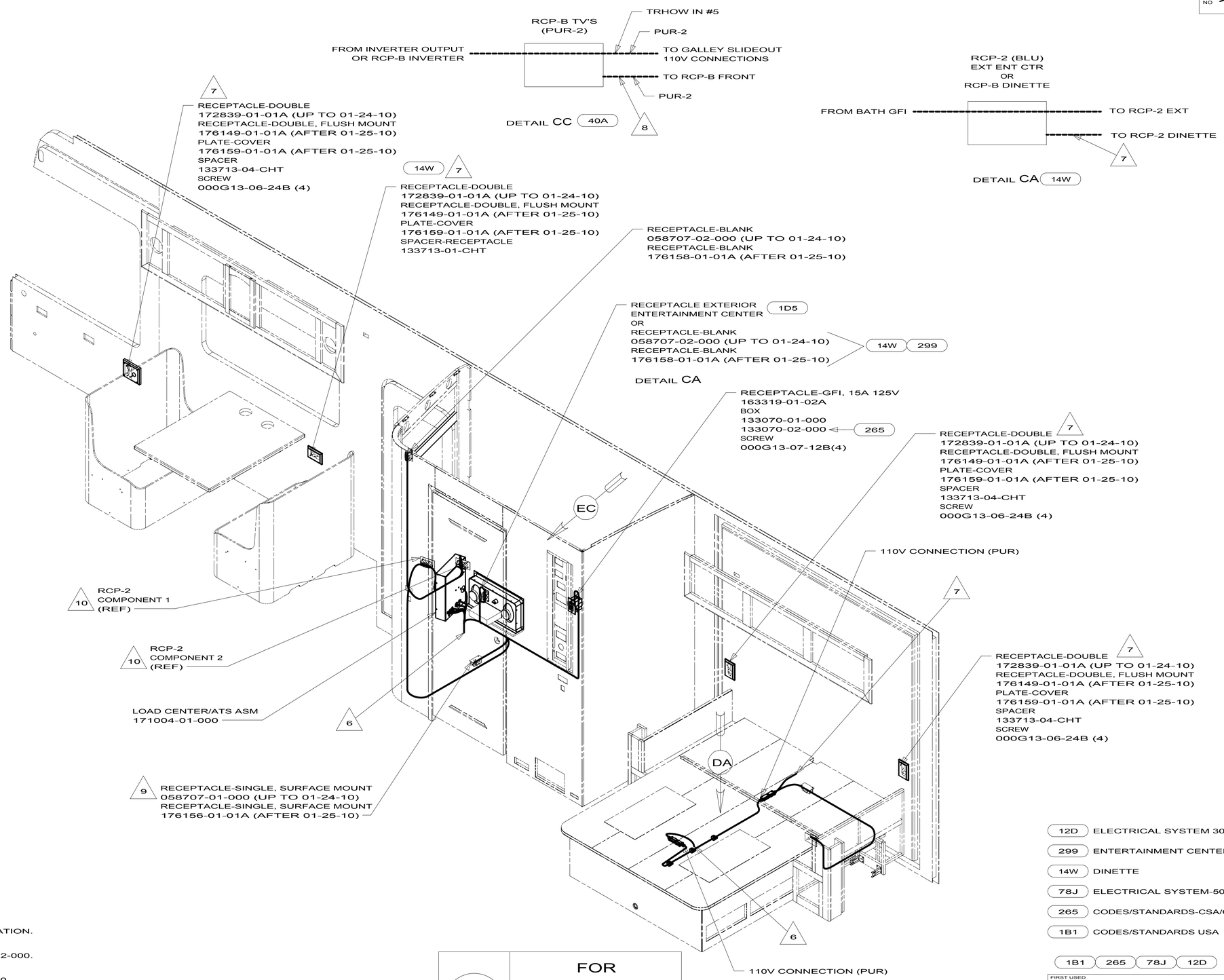

10 SEE WIRING INSTL-TV/DVD FOR ADDITIONAL INFORMATION.

9 SEE VIEW DB FOR POSITIONING.

8 WIRE IN ROOF.

7 WIRE IN SIDEWALL.

6 WIRE ROUTED THROUGH FLOOR AT THIS POINT.

5 SEE LOAD CENTER/ATS ASM FOR ADDITIONAL INFORMATION.

4. SEE WIRING DIAGRAM-BODY,110V FOR ADDITIONAL INFORMATION.

3. ALL GROUND WIRE TO BE COVERED WITH TUBING 008041-02-000.

2. ALL 110V WIRE TO BE CLAMPED WITH CLAMP 010497-05-000 WITHIN 200MM OF OUTLET BOXES, USE SCREW 000G67-10-12B.

1. ALL WIRES TO BE SECURED WITH CLAMP 010495-01-000 OR CLIP 080734-01-000 EVERY 600MM. USE SCREW 000G67-10-12B UNLESS OTHERWISE SPECIFIED.

NOTES:

X-X

FOR ELECTRICAL CALLOUTS SEE DWG NO. 121339-01-000

FOR ELECTRICAL TORQUE SPECIFICATIONS SEE DWG NO. 128783-01-000

12D ELECTRICAL SYSTEM 30 AMP

299 ENTERTAINMENT CENTER EXT.W/O

14W DINETTE

78J ELECTRICAL SYSTEM-50 AMP

265 CODES/STANDARDS-CSA/CMVSS

1B1 CODES/STANDARDS USA

1B1 265 78J 12D

FIRST USED 10 J32H

DO NOT SCALE DRAWING

TITLE: WIRING INSTL-BODY,110V

SHEET 3 | PART NO 171651 | REV

3/3/2010

DWG NO 171651

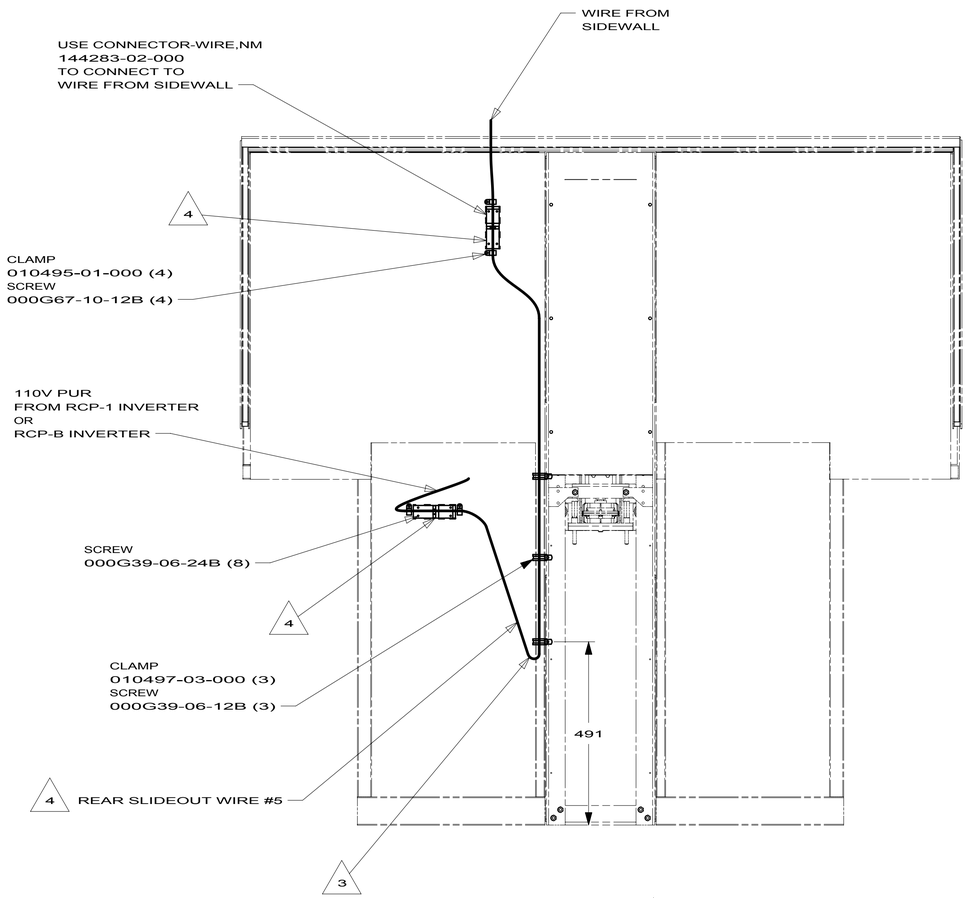

DETAIL DA 5

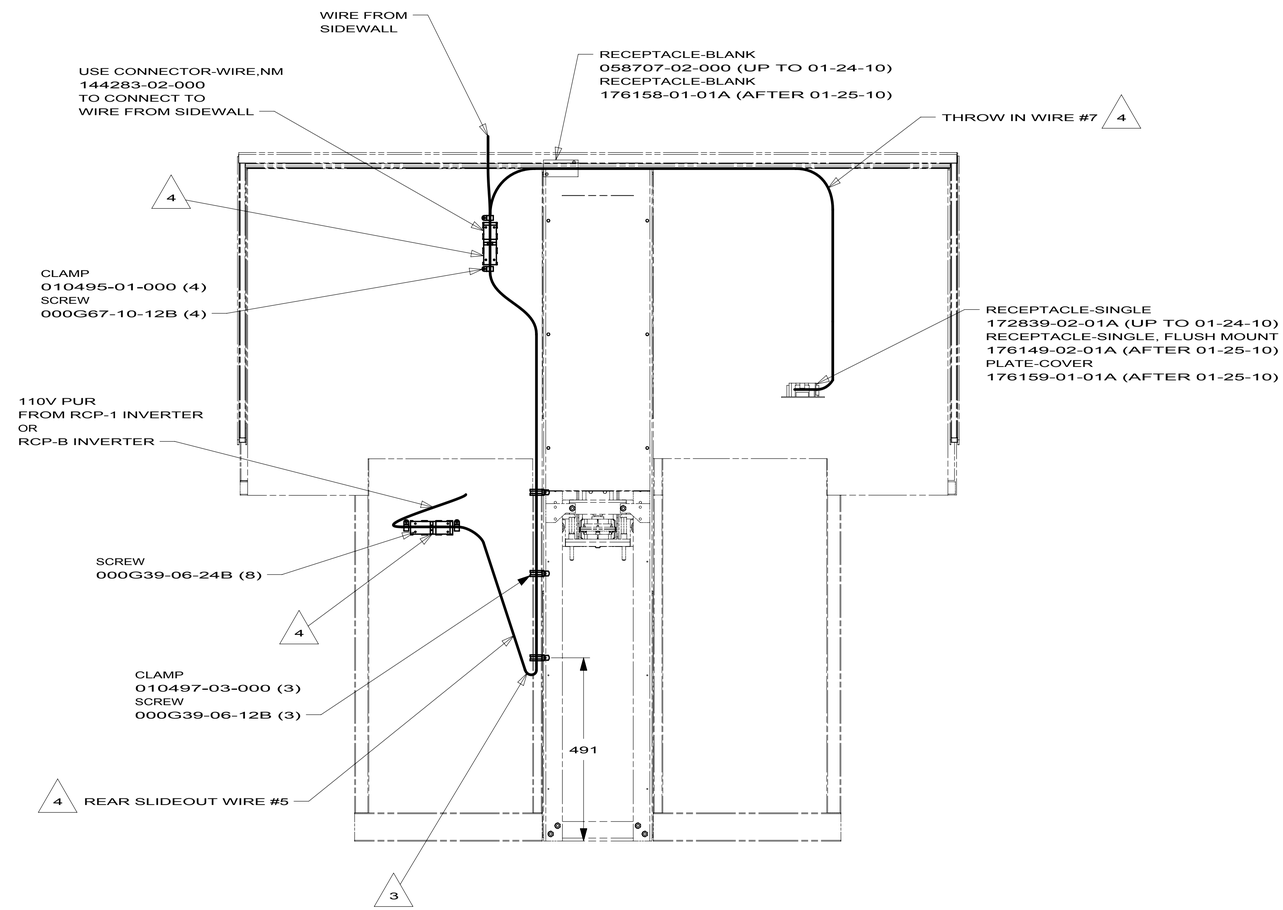

DETAIL DA 49M

5 WITHOUT 49M

4 SEE LOAD CENTER/ATS ASM FOR ADDITIONAL INFORMATION.

3 MAKE LOOP AS SMALL AS POSSIBLE WHEN SLIDEOUT IS COMPLETELY RETRACTED.

2. RUN 12V WIRE ALONG WITH REAR SLIDEOUT WIRE.

1. WIRE MUST BE ROUTED THROUGH CLAMPS AS SHOWN.

NOTES:

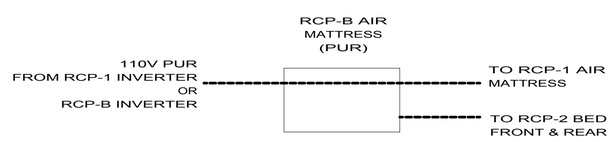

DETAIL DB

X-X

FOR ELECTRICAL CALLOUTS SEE DWG NO. 121339-01-000

FOR ELECTRICAL TORQUE SPECIFICATIONS SEE DWG NO. 128783-01-000

12D ELECTRICAL SYSTEM 30 AMP

49M SLEEP NUMBER BED-QUEEN SIZE

78J ELECTRICAL SYSTEM-50 AMP

265 CODES/STANDARDS-CSA/CMVSS

1B1 CODES/STANDARDS USA

1B1 265 78J 12D

FIRST USED 10 J32H

DO NOT SCALE DRAWING

TITLE: WIRING INSTL-BODY,110V

SHEET 4 | PART NO 171651 | REV

3/3/2010

DWG NO 171651

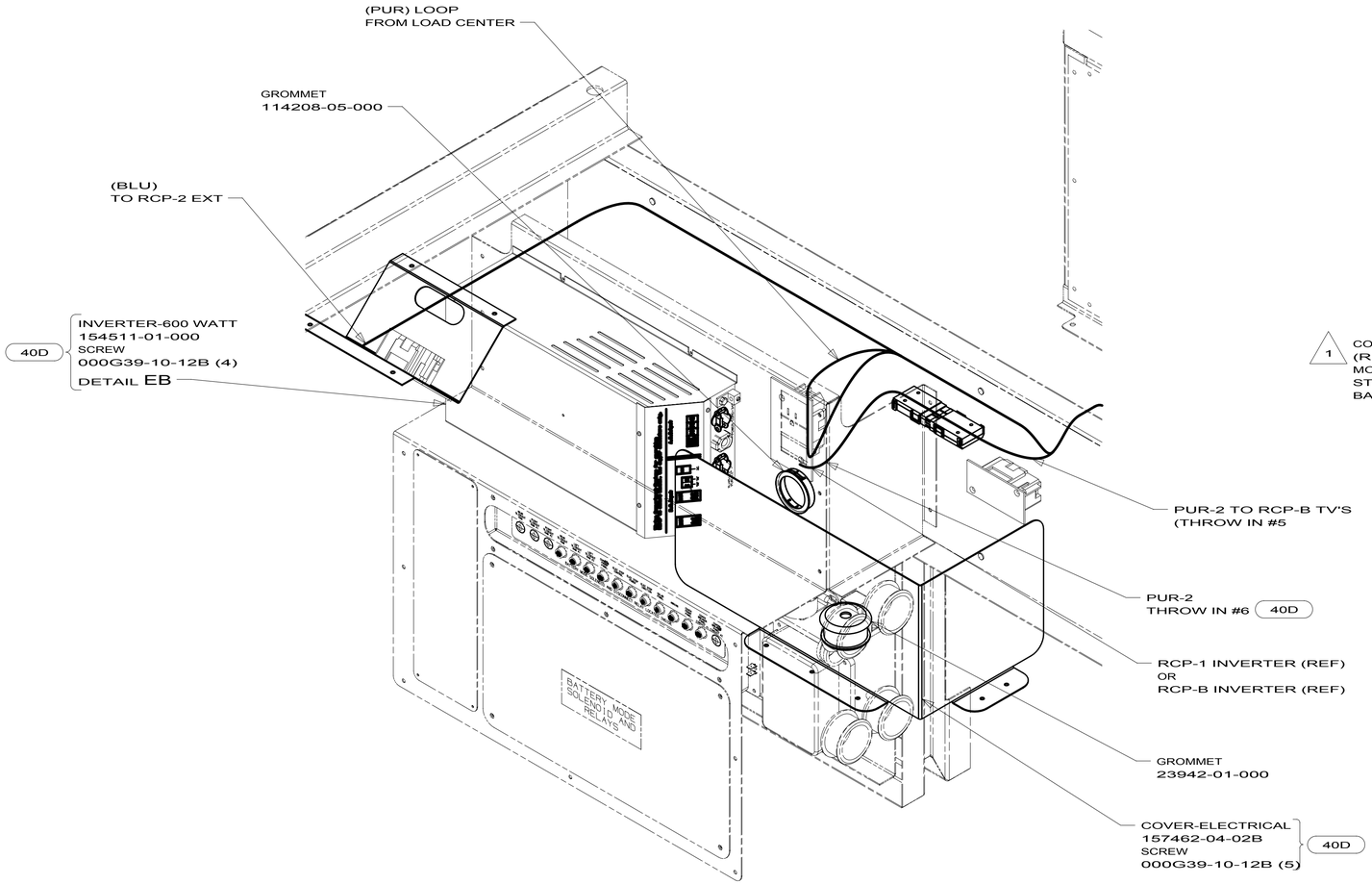

VIEW EA

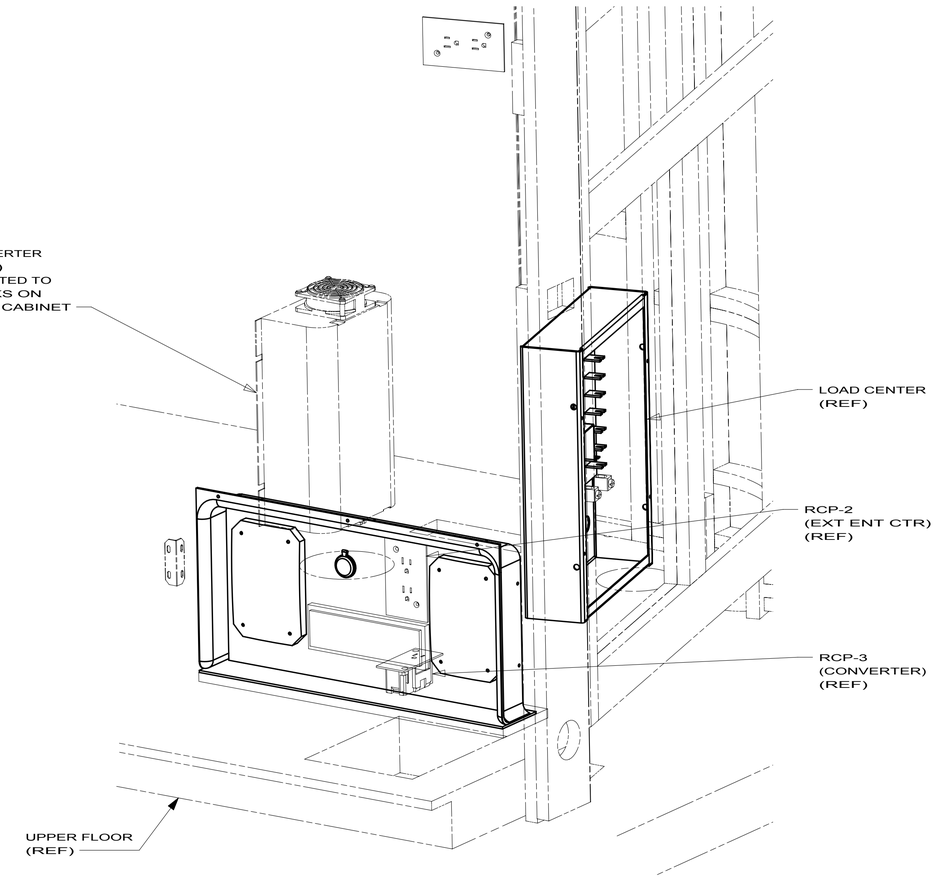

VIEW EC

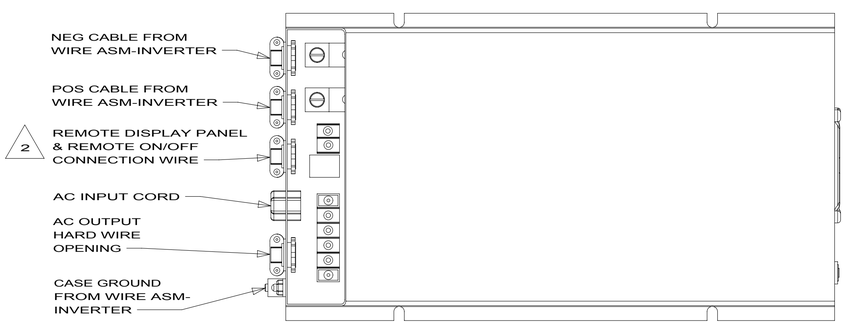

DETAIL EB

X-X

FOR ELECTRICAL CALLOUTS SEE DWG NO. 121339-01-000

FOR ELECTRICAL TORQUE SPECIFICATIONS SEE DWG NO. 128783-01-000

12D	ELECTRICAL SYSTEM 30 AMP
40D	INVERTER-DC/AC,600 WATT
78J	ELECTRICAL SYSTEM-50 AMP
265	CODES/STANDARDS-CSA/CMVSS
1B1	CODES/STANDARDS USA

1B1 265 78J 12D

NOTES:

2 WB FROM WIRE ASM-COACH TO PUR WIRE FROM INVERTER.

1 SEE WIRING INSTL-BODY,12V FOR ADDITIONAL INFORMATION.

FIRST USED 10 J32H

DO NOT SCALE DRAWING

TITLE: WIRING INSTL-BODY,110V

SHEET 5 | PART NO 171651 | REV

3/3/2010

DWG NO 171651

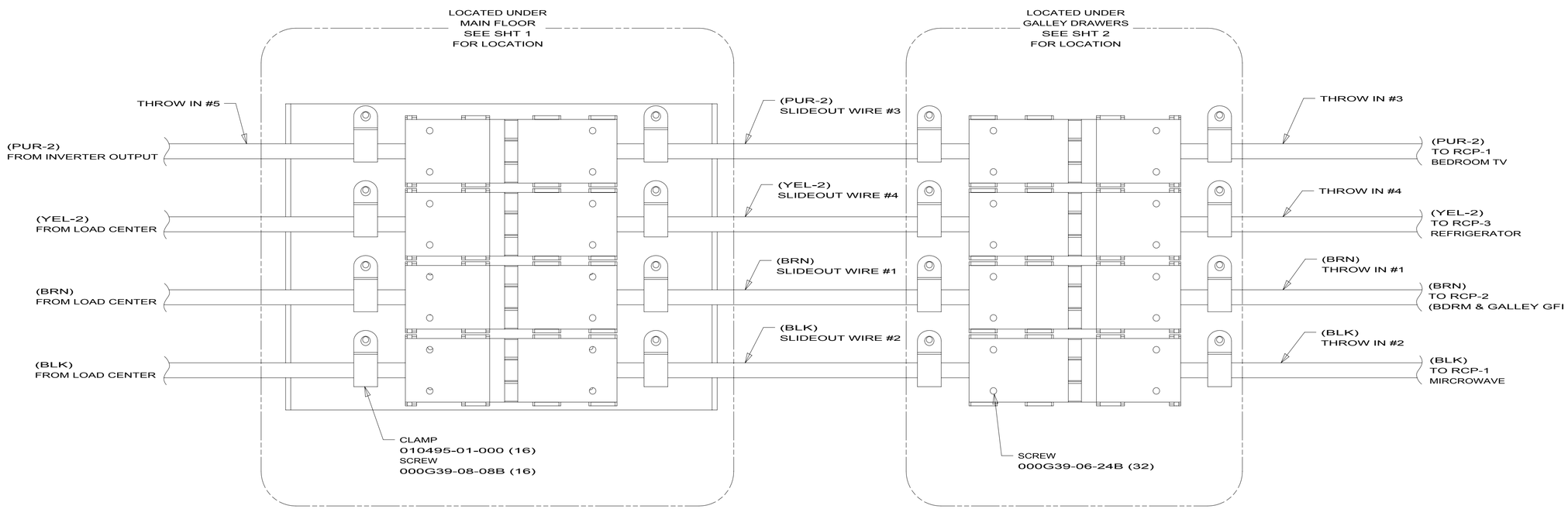

DETAIL FA

X-X

FOR ELECTRICAL CALLOUTS SEE DWG NO. 121339-01-000

FOR ELECTRICAL TORQUE SPECIFICATIONS SEE DWG NO. 128783-01-000

12D ELECTRICAL SYSTEM 30 AMP

78J ELECTRICAL SYSTEM-50 AMP

265 CODES/STANDARDS-CSA/CMVSS

1B1 CODES/STANDARDS USA

1B1 265 78J 12D

FIRST USED

10 J32H

DO NOT SCALE DRAWING

TITLE:

WIRING INSTL-BODY,110V

SHEET 6

PART NO 171651

REV

3/3/2010

170909-01-000

KEY	PART NUMBER	U/M	DESCRIPTION	VENDOR NO.
	170909-01-700	EA	REMOTE - SERVICE PACK	PSVCJE1909

COPYRIGHT © 2009 WINNEBAGO INDUSTRIES INC.

		J32H	J37F	J35Z	J38N	J35P	
BLK	14-UL	136131-06-040 △1	136131-06-085 △1	136131-06-030	136131-06-075 △1	136131-06-040 △1	
	14-CA	136134-06-040 △1	136134-06-085 △1	136134-06-030	136134-06-075 △1	136134-06-040 △1	
BLU	14-UL	136131-02-105	136131-02-270 △1	136131-02-075	136131-02-165	136131-02-135 △1	
	14-CA	136134-02-105	136134-02-250 △1	136134-02-075	136134-02-165	136134-02-135 △1	
BRN	14-UL	136131-03-040 △1	136131-03-085 △1	136131-03-120	136131-03-015	136131-03-040 △1	
	14-CA	136134-03-040 △1	136134-03-085 △1	136134-03-120	136134-03-015	136134-03-040 △1	
GLD	12-UL	N/A	136135-10-085	N/A	136135-10-065	136135-10-046	21M 54E
	12-CA	N/A	136136-10-085	N/A	136136-10-065	136136-10-046	21M 54E
GRN	12-UL	136135-08-090	136135-08-065	136135-08-110	136135-08-095	136135-08-095	78J
	12-CA	136136-08-090	136136-08-065	136136-08-110	136136-08-095	136136-08-095	78J
	12-UL	136135-08-070	136135-08-048	136135-08-093	136135-08-060	136135-08-075	12D
	12-CA	136136-08-070	136136-08-048	136136-08-093	136136-08-060	136136-08-075	12D
GRN 2	12-UL	136135-14-054	136135-14-080	136135-14-054	136135-14-054	136135-14-054	12D
	12-CA	136136-14-054	136136-14-080	136136-14-054	136136-14-054	136136-14-054	12D
PUR	14-UL	136131-04-090 △1	136131-04-065 △1	136131-04-140	136131-04-160 △1	136131-04-090 △1	
	14-CA	136134-04-090 △1	136134-04-065 △1	136134-04-140	136134-04-160 △1	136134-04-090 △1	
RED	12-UL	136135-07-090	136135-07-065	136135-07-110	136135-07-095	136135-07-095	
	12-CA	136136-07-090	136136-07-065	136136-07-110	136136-07-095	136136-07-095	
WHT	12-UL	136135-09-025	136135-09-051	136135-09-075	136135-09-040	136135-09-025	1B2
	12-CA	136136-09-025	136136-09-051	136136-09-075	136136-09-040	136136-09-025	1B2
YEL	14-UL	136131-05-020	136131-05-065	136131-05-030	136131-05-052	136131-05-020	
	14-CA	136134-05-020	136134-05-065	136134-05-030	136134-05-052	136134-05-020	
YEL 2	14-UL	136131-13-040 △1	136131-13-085 △1	136131-13-041	136131-13-055	136131-13-040 △1	
	14-CA	136134-13-040 △1	136134-13-085 △1	136134-13-041	136134-13-055	136134-13-040 △1	
GRY	14-UL	N/A	N/A	N/A	136131-15-075 △1	-----	14C
	14-CA	N/A	N/A	N/A	136134-15-075 △1	-----	14C
MAIN	10-UL	136137-01-070	136137-01-048	136137-01-093	136137-01-060	136137-01-075	12D
	10-CA	136138-01-070	136138-01-048	136138-01-093	136138-01-060	136138-01-075	12D
	6-3 UL	136139-01-070	136139-01-048	136139-01-093	136139-01-060	136139-01-075	78J
	6-3 CA	136140-01-070	136140-01-048	136140-01-093	136140-01-060	136140-01-075	78J
MAIN GROUND		N/A △2	N/A △2	136145-01-030	136145-01-045	-----	
ATS GROUND		136145-01-020	136145-01-020	136145-01-067	136145-01-061	136145-01-020	
CONDUIT ASM-CENTRAL A/C		151704-01-015	151704-01-015	151704-01-015	151704-01-015	151704-01-015	

REV	ZONE	REVISION RECORD	DATE	DFTR-ORIG

RELEASE — REV A — DATE — DWG NO 171004

△2 PART OF WIRE ASM-CHASSIS.

△1 SEE DETAIL EA.

NOTES:

14C	FIREPLACE-ELECTRIC
54E	WASHER/DRYER
21M	WASHER/DRYER PREP
1B2	WTR HTR-10GAL/ELEC/LP/MTRAID
78J	ELECTRICAL SYSTEM-50 AMP
12D	ELECTRICAL SYSTEM 30 AMP
265	CODES/STANDARDS-CSA/CMVSS
1B1	CODES/STANDARDS USA

1B1 265

FOR ELECTRICAL TORQUE SPECIFICATIONS SEE DWG NO. 128783-01-000

X-X FOR ELECTRICAL CALLOUTS SEE DWG NO. 121339-01-000

WINNEBAGO INDUSTRIES

COPYRIGHT 2009 WINNEBAGO INDUSTRIES, INC.

DFTR | ORIG. DATE
CHKR | ALL DIMENSIONS ARE IN MILLIMETERS
P.E.
M.E. | FIRST USED
DSNR | 10 J-SERIES

UNSPECIFIED TOLERANCES ARE:
WHOLE DIM (X) ± 3
ONE-PLACE (X.X) ± 1.5
TWO-PLACE (X.XX) ± 0.50
ANGLE ± 1°

MATERIAL:

THIRD ANGLE PROJECTION

DO NOT SCALE DRAWING

TITLE: LOAD CENTER/ATS ASM

SHEET 1 OF 5 | PART NO 171004 | REV

REF: 1

10/15/2009

DWG NO 171004

	J32H	J37F	J35Z	J38N	J35P
THROW IN WIRE #1	136131-03-145 △1	136131-03-105 △1	136131-03-080 △3	136131-03-075 △4	136131-03-020 △1
	136134-03-145 △1	136134-03-105 △1	136134-03-080 △3	136134-03-075 △4	136134-03-020 △1
THROW IN WIRE #2	136131-06-028 △1	136131-12-040 (21W)	136131-04-025 △1 (10X) OR (10G)	136131-03-017 △4	-------
	136134-06-028 △1	136134-12-040 (21W)	136134-04-025 △1 (10X) OR (10G)	136134-03-017 △4	-------
THROW IN WIRE #3	136131-12-057 △1	136131-12-070 △1	136131-12-052 △1 (10X) OR (10G)	----------	136131-12-057 △1
	136134-12-057 △1	136134-12-070 △1	136134-12-052 △1 (10X) OR (10G)	----------	136134-12-057 △1
THROW IN WIRE #4	136131-13-023 △1	136131-13-028 △1	136131-12-250 △2	136131-12-030 △1	136131-13-028 △1
	136134-13-023 △1	136134-13-028 △1	136134-12-250 △2	136134-12-030 △1	136134-13-028 △1
THROW IN WIRE #5	136131-12-140 △6	136131-12-150 △6	136131-12-006 △1 (40D)	136131-15-010 △1 (14C)	136131-12-145 △6
	136134-12-140 △6	136134-12-150 △6	136134-12-006 △1 (40D)	136134-15-010 △1 (14C)	136134-12-145 △6
THROW IN WIRE #6	136131-12-006 △1 (40D)	136131-12-006 △1 (40D)	136131-04-006 △1	136131-12-006 △1	136131-12-006 △1 (40D)
	136134-12-006 △1 (40D)	136134-12-006 △1 (40D)	136134-04-006 △1	136134-12-006 △1	136134-12-006 △1 (40D)
THROW IN WIRE #7	136131-04-018 △1 (49M)	136131-04-006 △1	136131-12-035 △1 (45X)	136131-12-260 △6	136131-04-018 △1 (49N)
	136134-04-018 △1 (49M)	136134-04-006 △1	136134-12-035 △1 (45X)	136134-12-260 △6	136134-04-018 △1 (49N)
THROW IN WIRE #8	----	136135-10-040	136131-04-070 △1 (45X)	136131-04-018 (49N)	136135-10-040
	----	136136-10-040	136134-04-070 △1 (45X)	136134-04-018 (49N)	136136-10-040
THROW IN FRONT TV	----	----	136131-12-008	----	-------
	----	----	136134-12-008	----	-------
SLIDEOUT WIRE #1	136151-03-017 △5	136151-03-017 △5	136151-03-028 △3	136151-03-028 △2	136151-03-017 △5
SLIDEOUT WIRE #2	136151-06-017 △5	136151-06-017 △5	136151-04-017 △2	136151-06-028 △2	136151-06-017 △5
SLIDEOUT WIRE #3	136151-12-017 △5	136151-12-017 △5	136151-04-023 △2	136151-12-028 △2	136151-12-017 △5
SLIDEOUT WIRE #4	136151-13-017 △5	136151-13-017 △5	136151-12-023 △2	136151-15-028 △2 (14C)	136151-13-017 △5
SLIDEOUT WIRE #5	136151-04-018 △2	136152-10-019 △7	----	136151-04-017 △2	136152-10-019 △7
SLIDEOUT WIRE #6	----	136151-04-015 △2	----	136151-03-026 △4	136151-04-018 △2
SLIDEOUT WIRE #7	----	136151-02-023 △2	----	----	136151-02-023 △2

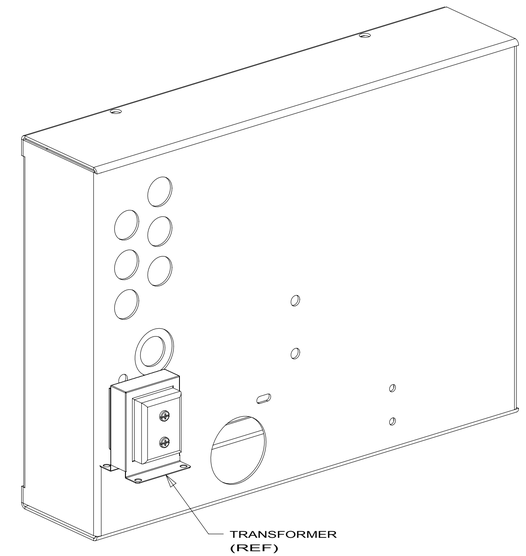

DETAIL BA
(LOAD CENTER SHOWN FROM THE BACK SIDE)

△7 SEE DETAIL EG.
△6 SEE DETAIL EF.
△5 SEE DETAIL EE.
△4 SEE DETAIL ED.
△3 SEE DETAIL EC.
△2 SEE DETAIL EB.
△1 SEE DETAIL EA.

NOTES:

(21W) DINING,BUFFET,TV
(78J) ELECTRICAL SYSTEM-50 AMP
(49N) SLEEP NUMBER BED-KING SIZE
(49M) SLEEP NUMBER BED-QUEEN SIZE
(45X) BED - BUNKS
(40D) INVERTER-DC/AC,600 WATT
(12D) ELECTRICAL SYSTEM 30 AMP
(14C) FIREPLACE-ELECTRIC
(10X) SOFA (BEDROOM)
(10G) SOFA (BEDROOM) ULTRALEATHER
(265) CODES/STANDARDS-CSA/CMVSS
(1B1) CODES/STANDARDS USA

(1B1) (265) (12D) (78J)

FOR ELECTRICAL TORQUE SPECIFICATIONS SEE DWG NO. 128783-01-000

(X-X) FOR ELECTRICAL CALLOUTS SEE DWG NO. 121339-01-000

FIRST USED
10 J-SERIES

DO NOT SCALE DRAWING

TITLE:
LOAD CENTER/ATS ASM

SHEET 2 | PART NO 171004 | REV

10/15/2009

DWG NO 171004

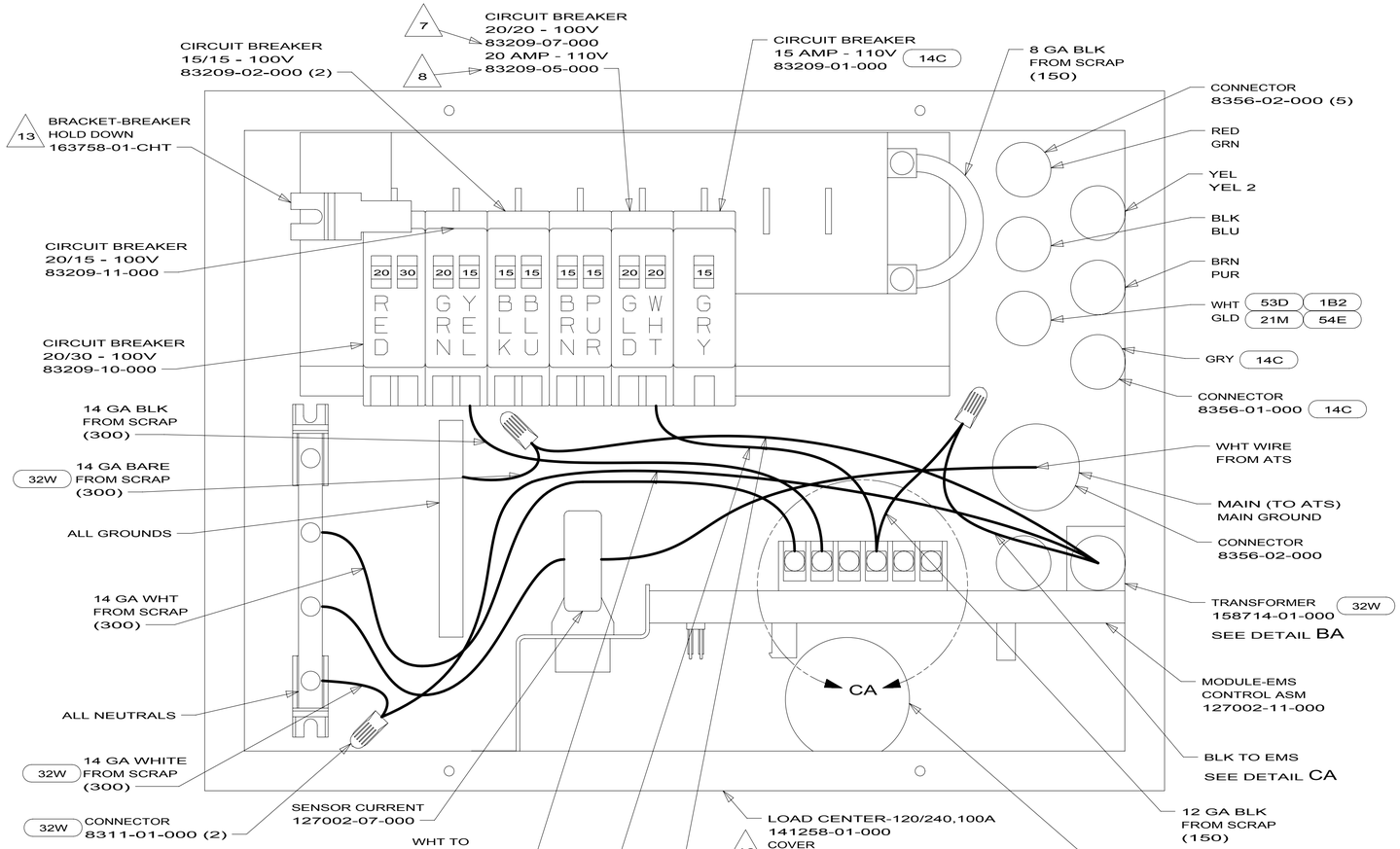

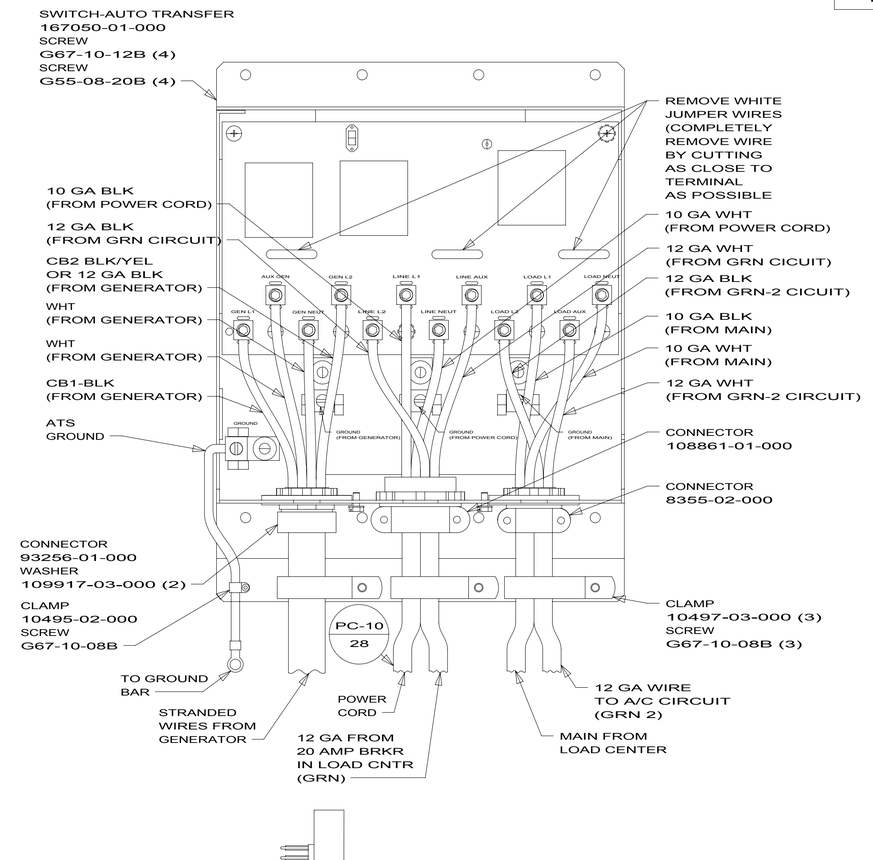

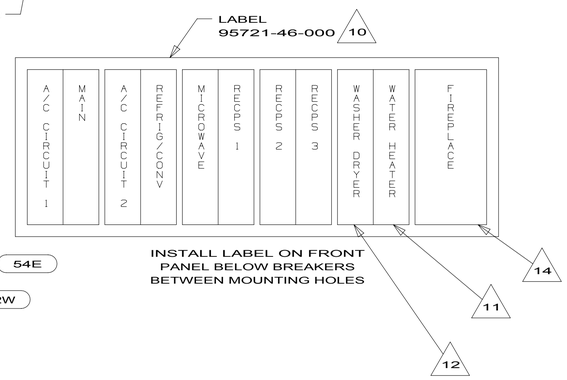

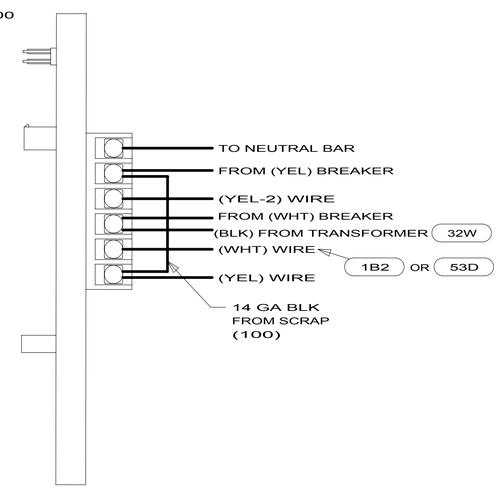

DETAIL CA

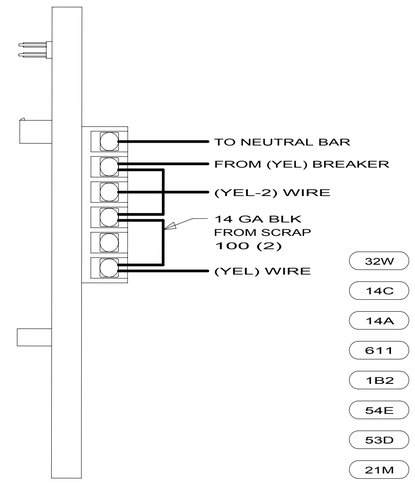

DETAIL CA 9

14 BLACKEN OUT FIREPLACE WITH 14A

13 LOOSEN LEFT BUSS BAR MOUNTING SCREW, INSERT BRACKET-BREAKER HOLD DOWN UNDER SCREW, ORIENTATE BRACKET TOWARD MAIN BREAKER AS SHOWN AND TIGHTEN SCREW.

12 BLACKEN OUT WASHER DRYER WITH BLACK MARKER ON 33V ONLY.

11 BLACKEN OUT WATER HEATER WITH BLACK MARKER WITH 611

10 INSTALLED BY ASSEMBLY LINE.

9 WITHOUT 53D OR 1B2

8 WITH 21M & 611 OR 54E & 611 OR 32W W/O 21M / 54E

7 WITH 21M /54E & 1B2 / 53D OR 21M / 54E & 32W

6. REMOVE 400MM FROM OUTER JACKET ON ALL WIRES ENTERING LOAD CENTER AND TRIM INDIVIDUAL CONDUCTORS AS REQUIRED TO MAKE INTERNAL CONNECTIONS.

5. ATTACH WIRES TO BACKSIDE OF LOAD CENTER, USE EXISTING HOLES AND TIE-WIRE 116673-01-000.

4. ALL 110V STRANDED WIRE W/O TERMINALS TO BE STRIPPED 10MM AND SOLDER DIPPED.

3. ALL WIRES TO BE CLAMPED WITHIN 200MM OF ATS.

2. GROUND WIRES ARE NOT SHOWN FOR CLARITY.

1. ALL GROUND WIRES TO BE COVERED WITH TUBING 8041-02-000.

NOTES:

32W	GENERATOR-START,AUTO SYSTEM
14C	FIREPLACE-ELECTRIC
14A	FIREPLACE-ELECTRIC WITHOUT
611	WTR HTR-AUX AUTO/MOTORAID
1B2	WTR HTR-10GAL/ELEC/LP/MTRAID
54E	WASHER/DRYER
53D	WTR HTR-6GAL/ELE/LP/MOTORAID
21M	WASHER/DRYER PREP
12D	ELECTRICAL SYSTEM 30 AMP
265	CODES/STANDARDS-CSA/CMVSS
1B1	CODES/STANDARDS USA

1B1 265 12D

FOR ELECTRICAL TORQUE SPECIFICATIONS SEE DWG NO. 128783-01-000

X-X FOR ELECTRICAL CALLOUTS SEE DWG NO. 121339-01-000

FIRST USED 10 J-SERIES

DO NOT SCALE DRAWING

TITLE: LOAD CENTER/ATS ASM

SHEET 3 PART NO 171004 REV

10/15/2009

DWG NO 171004

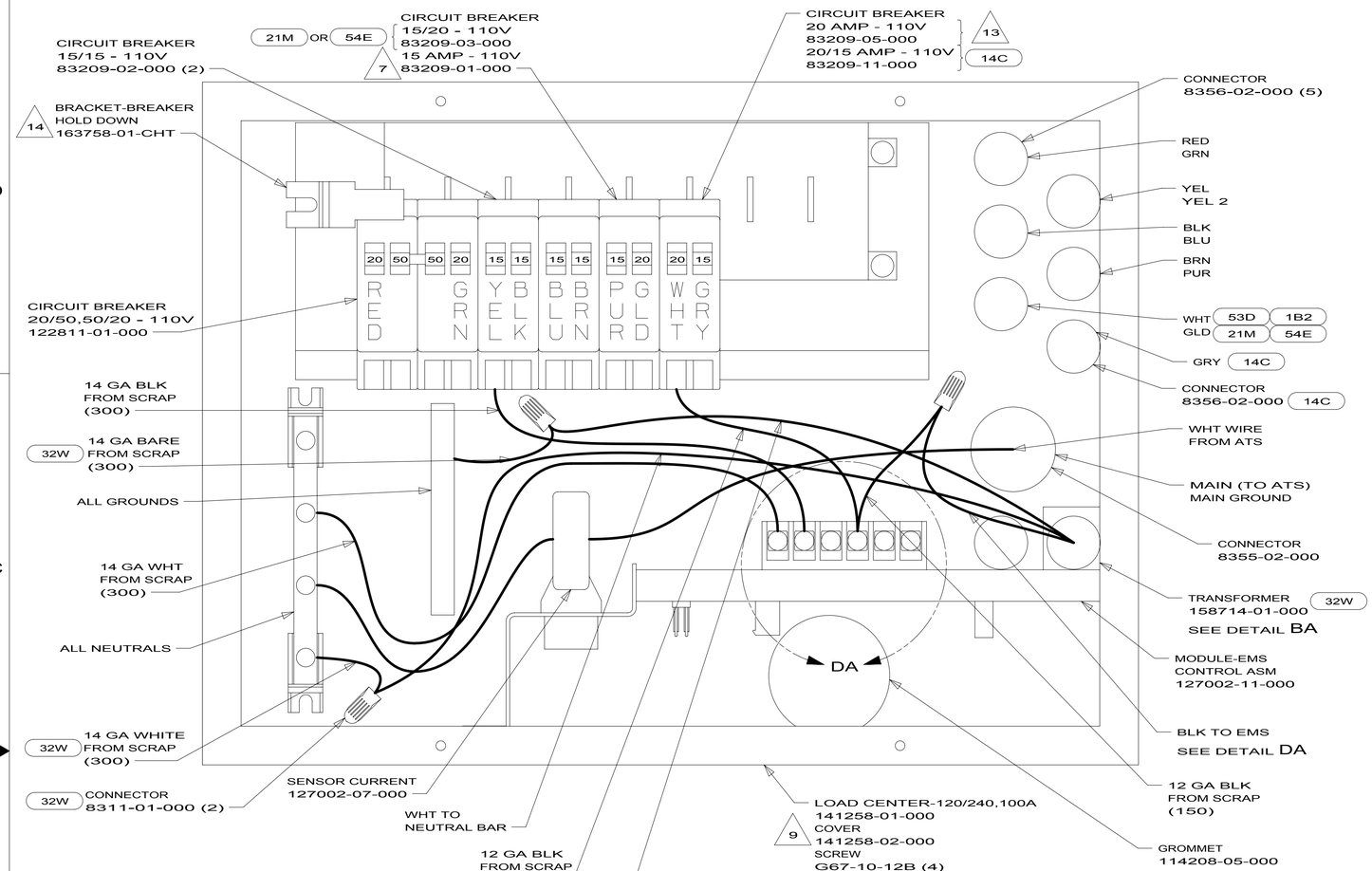

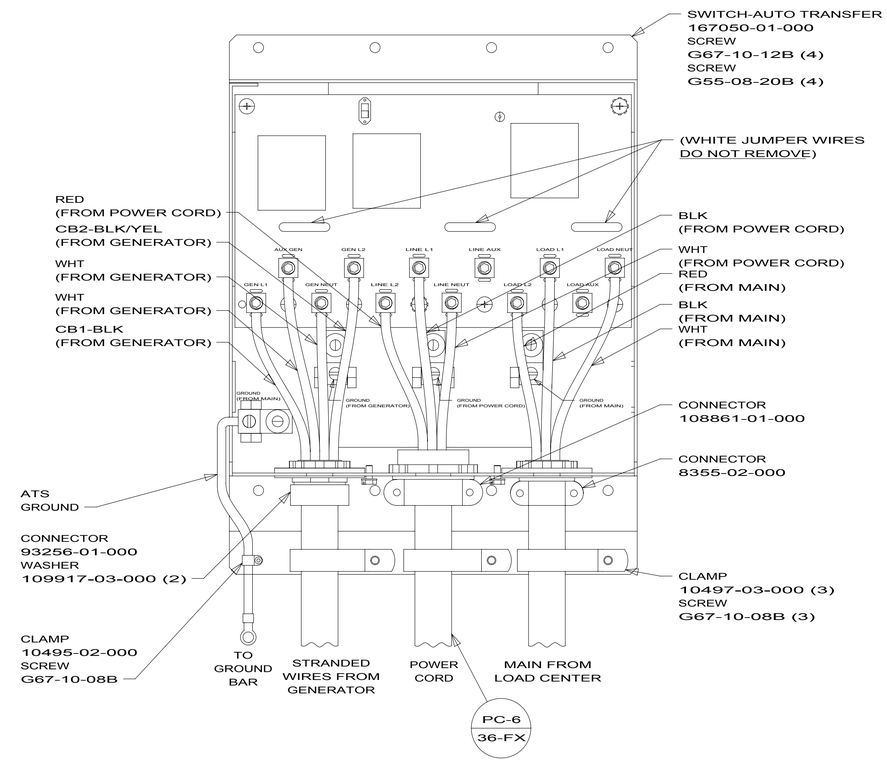

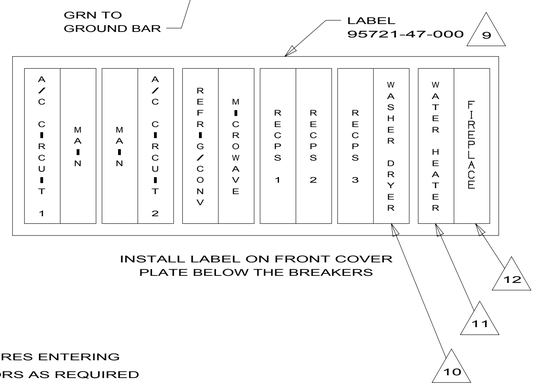

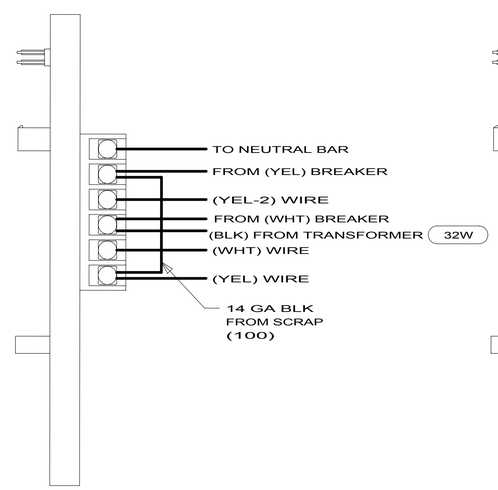

DETAIL DA

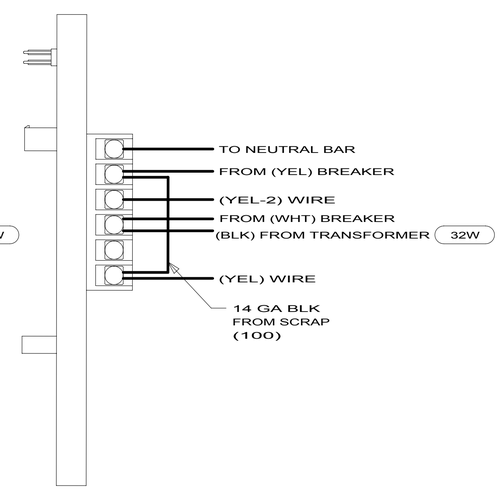

DETAIL DA 8

13 WITHOUT 14C

12 BLACKEN OUT FIREPLACE WITHOUT 14C

11 BLACKEN OUT WATER HEATER WITH BLACK MARKER WITH 611

10 BLACKEN OUT WASHER DRYER WITH BLACK MARKER ON 33V ONLY.

9 INSTALLED BY ASSEMBLY LINE.

8 WITHOUT 53D OR 1B2

7 WITHOUT 21M OR 54E

NOTES:

6. REMOVE 400MM FROM OUTER JACKET ON ALL WIRES ENTERING LOAD CENTER AND TRIM INDIVIDUAL CONDUCTORS AS REQUIRED TO MAKE INTERNAL CONNECTIONS.

5. ATTACH WIRES TO BACKSIDE OF LOAD CENTER, USE EXISTING HOLES AND TIE-WIRE 116673-01-000.

4. ALL 110V STRANDED WIRE W/O TERMINALS TO BE STRIPPED 10MM AND SOLDER DIPPED.

3. ALL WIRES TO BE CLAMPED WITHIN 200MM OF ATS.

2. GROUND WIRES ARE NOT SHOWN FOR CLARITY.

1. ALL GROUND WIRES TO BE COVERED WITH TUBING 8041-02-000.

14 LOOSEN LEFT BUSS BAR MOUNTING SCREW, INSERT BRACKET-BREAKER HOLD DOWN UNDER SCREW, ORIENTATE BRACKET TOWARD MAIN BREAKER AS SHOWN AND TIGHTEN SCREW.

32W	GENERATOR-START,AUTO SYSTEM
14C	FIREPLACE-ELECTRIC
611	WTR HTR-AUX AUTO/MOTORAID
53D	WTR HTR-6GAL/ELE/LP/MOTORAID
1B2	WTR HTR-10GAL/ELEC/LP/MTRAID
54E	WASHER/DRYER
21M	WASHER/DRYER PREP
78J	ELECTRICAL SYSTEM-50 AMP
265	CODES/STANDARDS-CSA/CMVSS
1B1	CODES/STANDARDS USA

1B1 265 78J

FOR ELECTRICAL TORQUE SPECIFICATIONS SEE DWG NO. 128783-01-000

X-X FOR ELECTRICAL CALLOUTS SEE DWG NO. 121339-01-000

FIRST USED

10 J-SERIES

DO NOT SCALE DRAWING

TITLE: LOAD CENTER/ATS ASM

SHEET 4 | PART NO 171004 | REV

10/15/2009

DWG NO 171004

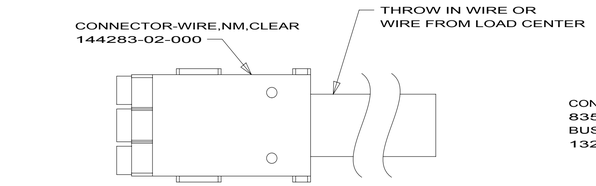

DETAIL EA

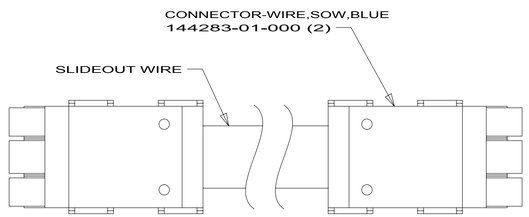

DETAIL EB

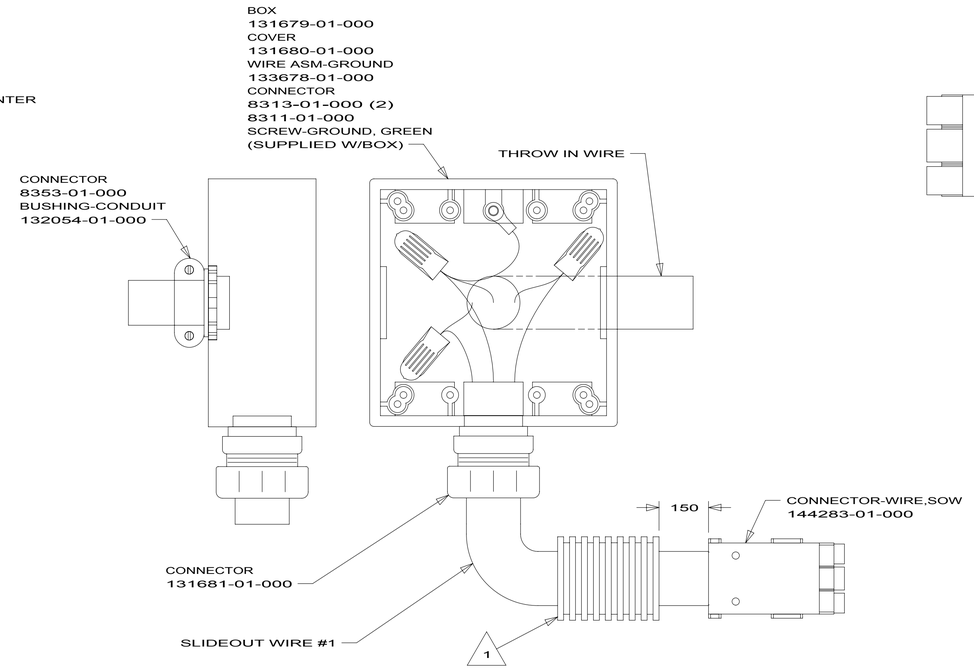

DETAIL EC

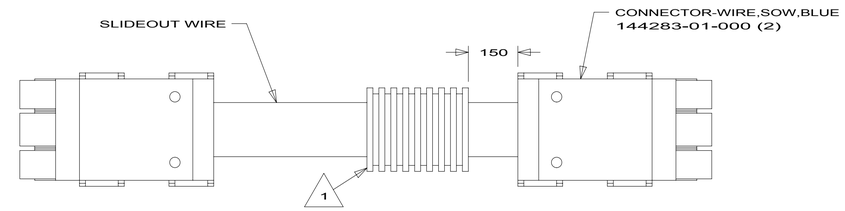

DETAIL EE

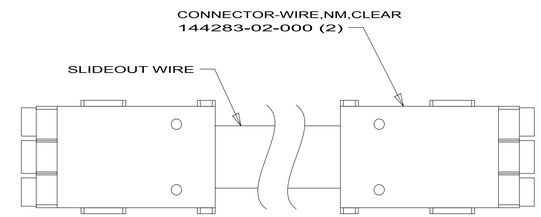

DETAIL EF

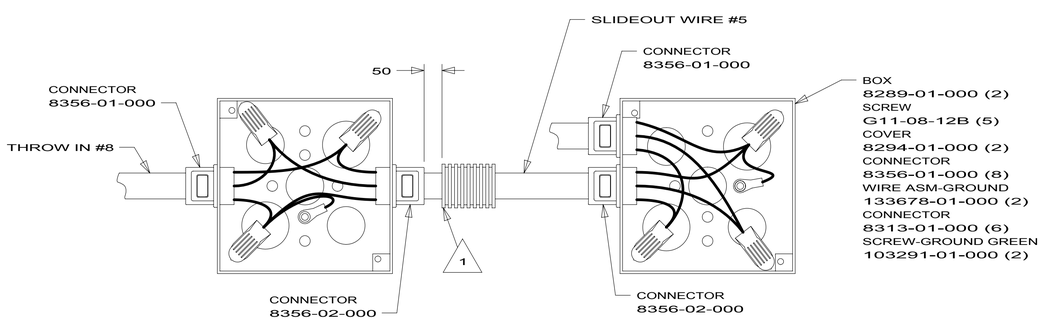

DETAIL EG

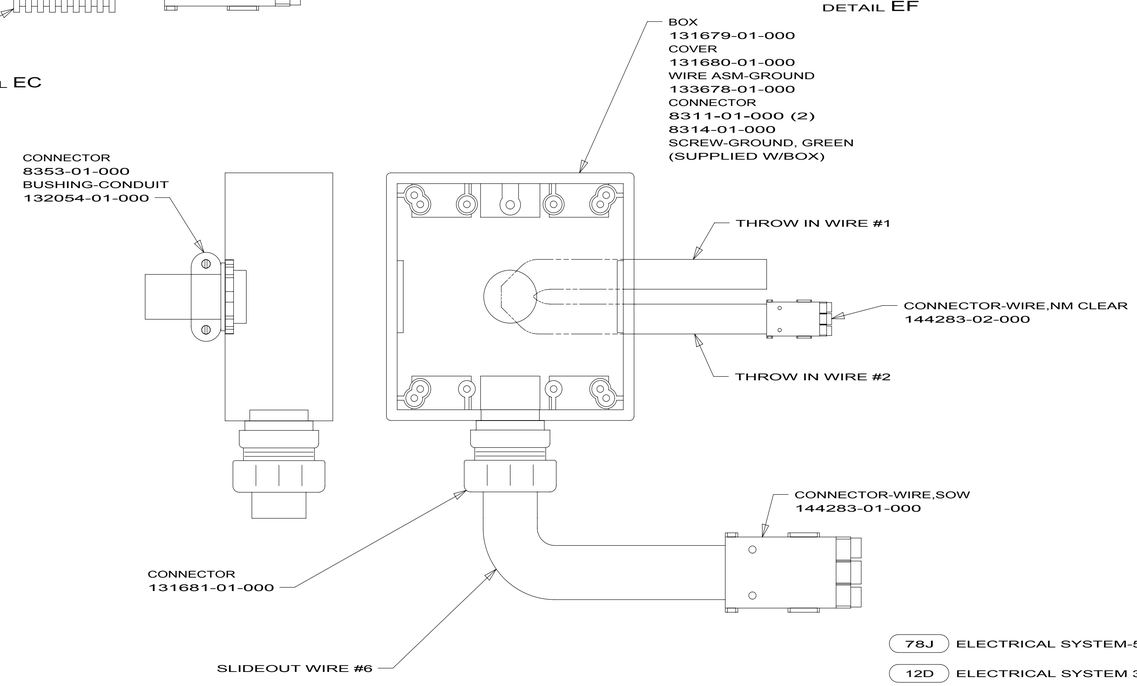

DETAIL ED 2

78J ELECTRICAL SYSTEM-50 AMP

12D ELECTRICAL SYSTEM 30 AMP

265 CODES/STANDARDS-CSA/CMVSS

1B1 CODES/STANDARDS USA

2 THE BLACK INDIVIDUAL CONDUCTORS FOR EACH SPECIFIC COLORED CIRCUIT ARE TO BE CONNECTED TOGETHER. THE WHITE INDIVIDUAL CONDUCTORS FOR EACH SPECIFIC COLORED CIRCUIT ARE TO BE CONNECTED TOGETHER. ALL GROUND WIRES ARE TO BE CONNECTED TOGETHER.

1 APPLY 300MM OF CONDUIT-CONVOLUTE 41953-05-000 OVER WIRE AT DIMENSION SHOWN AND SECURE BOTH ENDS OF TUBING TO WIRE WITH TAPE 8363-01-000.

NOTES:

FOR ELECTRICAL TORQUE SPECIFICATIONS SEE DWG NO. 128783-01-000

X-X FOR ELECTRICAL CALLOUTS SEE DWG NO. 121339-01-000

1B1 265 12D 78J

FIRST USED

10 J-SERIES

DO NOT SCALE DRAWING

TITLE: LOAD CENTER/ATS ASM

SHEET 5 | PART NO 171004 | REV

10/15/2009

RELEASE	REV A	DATE	DWG NO 171650

REV	ZONE	REVISION RECORD	DATE	DFTR-ORIG

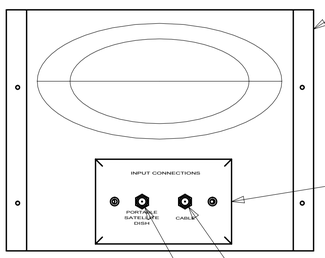

PANEL-SERVICE
132862-07-02B
SCREW
000G67-10-10B (4)

PLATE-WALL,TELEPHONE/COAX
149557-03-01A
SCREW
000G39-08-08B (2)

COAX GLD

COAX RED

VIEW AA

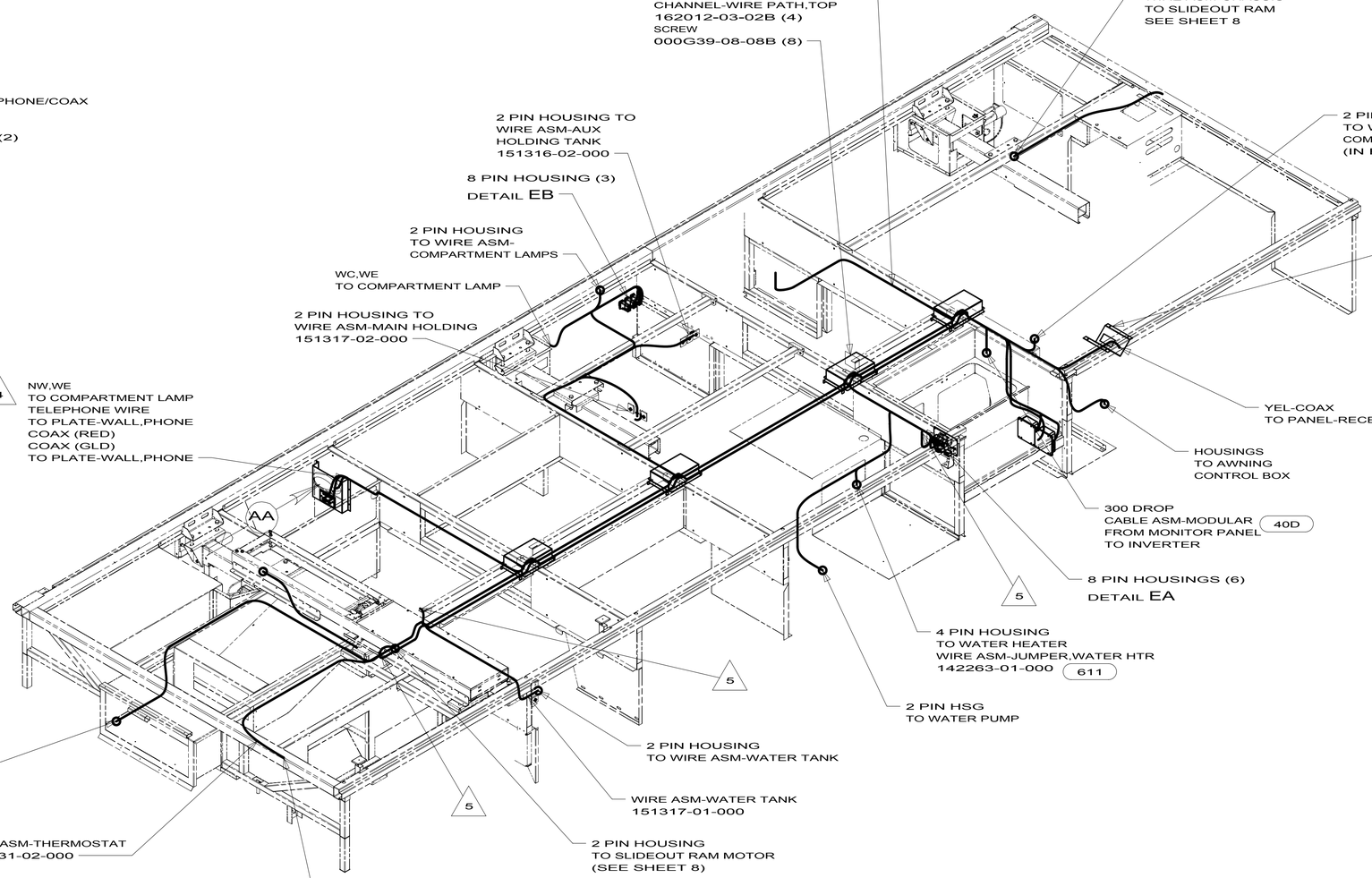

WIRE ASM-COACH
170421-01-000

CHANNEL-WIRE PATH,TOP
162012-03-02B (4)
SCREW
000G39-08-08B (8)

WIRE ASM-CHASSIS
TO SLIDEOUT RAM
SEE SHEET 8

2 PIN HOUSING TO
WIRE ASM-AUX
HOLDING TANK
151316-02-000

8 PIN HOUSING (3)
DETAIL EB

2 PIN HOUSING
TO WIRE ASM-
COMPARTMENT LAMPS
(IN FLOOR)

2 PIN HOUSING
TO WIRE ASM-
COMPARTMENT LAMPS

WC,WE
TO COMPARTMENT LAMP

2 PIN HOUSING TO
WIRE ASM-MAIN HOLDING
151317-02-000

PANEL-RECEPTACLE
151376-02-02B
ADAPTER
082134-01-000
NUT
082136-01-000
LABEL
157486-01-02A
SCREW
000G67-10-12B (4)

4 NW,WE
TO COMPARTMENT LAMP
TELEPHONE WIRE
TO PLATE-WALL,PHONE
COAX (RED)
COAX (GLD)
TO PLATE-WALL,PHONE

YEL-COAX
TO PANEL-RECEPTACLE

HOUSINGS
TO AWNING
CONTROL BOX

AA

300 DROP
CABLE ASM-MODULAR
FROM MONITOR PANEL
TO INVERTER
40D

8 PIN HOUSINGS (6)
DETAIL EA

5

4 PIN HOUSING
TO WATER HEATER
WIRE ASM-JUMPER,WATER HTR
142263-01-000
611

5

2 PIN HSG
TO WATER PUMP

2 PIN HOUSING
TO WIRE ASM-WATER TANK

4 PIN HOUSING
TO FURNACE

5

WIRE ASM-WATER TANK
151317-01-000

WIRE ASM-THERMOSTAT
135131-02-000

2 PIN HOUSING
TO SLIDEOUT RAM MOTOR
(SEE SHEET 8)

WIRE ASM-THERMOSTAT
FROM WIRE ASM-COACH
TO CENTRAL A/C

5 WIRE PASSES THROUGH FLOOR AT THIS POINT.

4 CONNECT TELEPHONE WIRE TO MATCHING COLORS ON PLATE-WALL,TELEPHONE.

3. ROUTE TANK SENSOR WIRES SO THEY DO NOT PASS OVER SENSORS. USE WIRE TIE MOUNT 155366-01-000 AND WIRE TIE 8343-01-000 AS NEEDED. TANK SURFACE MUST BE CLEANED USING ISOPROPYL ALCOHOL AND PRIME WITH PRIMER 94.

2. SEE WIRING DIAGRAM-BODY,12V FOR ADDITIONAL INFORMATION.

1. ALL WIRES TO BE CLAMPED WITH CLAMP 010495-01-000 OR WIRE TIE 008343-02-000 EVERY 6OOMM UNLESS OTHERWISE SPECIFIED.

NOTES:

611	WTR HTR-AUX AUTO/MOTORAID
40D	INVERTER-DC/AC,600 WATT
265	CODES/STANDARDS-CSA/CMVSS
1B1	CODES/STANDARDS USA

1B1 265

FOR ELECTRICAL TORQUE SPECIFICATIONS SEE DWG NO. 128783-01-000

X-X FOR ELECTRICAL CALLOUTS SEE DWG NO. 121339-01-000

WINNEBAGO INDUSTRIES

COPYRIGHT 2010
WINNEBAGO
INDUSTRIES, INC.

DFTR	ORIG. DATE
CHKR	ALL DIMENSIONS ARE IN MILLIMETERS
P.E.	
M.E.	FIRST USED
DSNR	10 J32H

UNSPECIFIED TOLERANCES ARE:		
WHOLE DIM (X)	±	3
ONE-PLACE (X.X)	±	1.5
TWO-PLACE (X.XX)	±	0.50
ANGLE	±	1°

THIRD ANGLE PROJECTION

MATERIAL:

DO NOT SCALE DRAWING

TITLE: WIRING INSTL-BODY,12V

SHEET 1 OF 8 | PART NO 171650 | REV

REF: 1

3/4/2010

DWG NO 171650

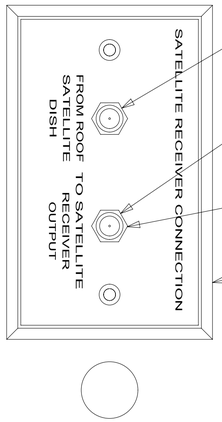

COAX-ORG/ORG
(FROM WIRE ASM-ROOF) 9

COAX-UNMARKED
(TO BEDROOM TV)
(SEE WIRING INSTL-BODY,110V
FOR ADDITIONAL INFORMATION) 9

COAX-GRN/GRN
(FROM WIRE ASM-COACH) 10

PLATE-WALL
149557-05-01A
SCREW
000G12-06-08B

DETAIL BB

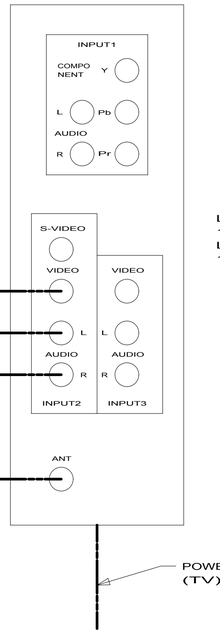

3-WAY
RCA CABLE

GRN COAX
FROM SAT
PREP PLATE

POWER CORD
(TV)

DETAIL BA

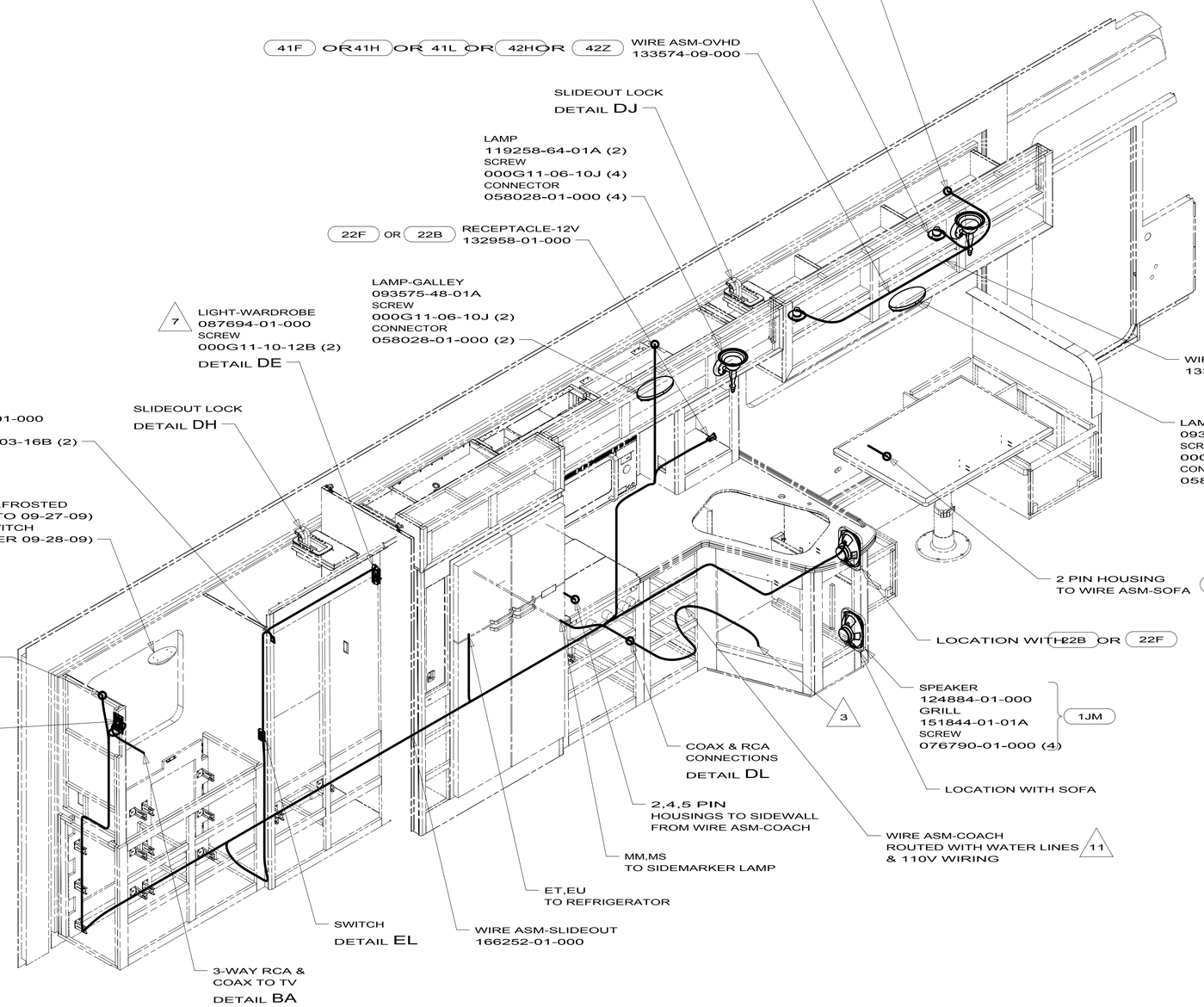

2 PIN HOUSING
FROM WIRE ASM-SIDEWALL

41F OR 41H OR 41L OR 42H OR 42Z
LIGHT-READING,SWIVEL
132427-01-01A (2)

41F OR 41H OR 41L OR 42H OR 42Z
WIRE ASM-OVHD
133574-09-000

SLIDEOUT LOCK
DETAIL DJ

LAMP
119258-64-01A (2)
SCREW
000G11-06-10J (4)
CONNECTOR
058028-01-000 (4)

22F OR 22B
RECEPTACLE-12V
132958-01-000

LAMP-GALLEY
093575-48-01A
SCREW
000G11-06-10J (2)
CONNECTOR
058028-01-000 (2)

7
LIGHT-WARDROBE
087694-01-000
SCREW
000G11-10-12B (2)
DETAIL DE

7 6
SWITCH
056264-01-000
SCREW
000G11-03-16B (2)

SLIDEOUT LOCK
DETAIL DH

LIGHT-OVAL,SGL,W/SW,FROSTED
170693-01-01A (UP TO 09-27-09)
LIGHT-OVAL,SGL,W/SWITCH
170693-02-02A (AFTER 09-28-09)

2 PIN HOUSING
TO SLIDEOUT ROOF

COAX TO SATELLITE
PREP PLATE & TV
DETAIL BB

WIRE ASM-EXTENSION
133572-01-012
22B OR 22F

LAMP ASM-DINETTE
093575-48-01A
SCREW
000G11-06-10J (2)
CONNECTOR
058028-01-000 (2)
22B OR 22F

2 PIN HOUSING
TO WIRE ASM-SOFA
41F OR 41H OR 41L OR 42H OR 42Z

LOCATION WITH 22B OR 22F

SPEAKER
124884-01-000
GRILL
151844-01-01A
SCREW
076790-01-000 (4)
1JM

3

COAX & RCA
CONNECTIONS
DETAIL DL

LOCATION WITH SOFA

2,4,5 PIN
HOUSINGS TO SIDEWALL
FROM WIRE ASM-COACH

WIRE ASM-COACH
ROUTED WITH WATER LINES
& 110V WIRING 11

MM,MS
TO SIDEMARKER LAMP

ET,EU
TO REFRIGERATOR

SWITCH
DETAIL EL

WIRE ASM-SLIDEOUT
166252-01-000

3-WAY RCA &
COAX TO TV
DETAIL BA

1JM	HOME THEATER SOUND SYSTEM
42Z	LOUNGE SEATING-THEATER STYLE
42H	REST EASY-DUAL CONTROL
41L	RESTEASY DUAL CTL ULTRALE LH
41H	REST EASY, ULTRALEATHER
41F	REST EASY MULTI POS LOUNGE
22F	DINETTE, U-SHAPED ULTRALEATH
22B	DINETTE - U-SHAPED
40D	INVERTER-DC/AC,600 WATT
265	CODES/STANDARDS-CSA/CMVSS
1B1	CODES/STANDARDS USA

NOTES:

1. ALL WIRES TO BE CLAMPED WITH CLAMP 010495-01-000 OR WIRE TIE 008343-02-000 EVERY 600MM UNLESS OTHERWISE SPECIFIED.
2. SEE WIRING DIAGRAM-BODY,12V FOR ADDITIONAL INFORMATION.
3. WIRE PASSES THROUGH FLOOR AT THIS POINT.
4. WIRE IN SIDEWALL.
5. WIRE IN ROOF.
6. MOUNT DEVICE AS CLOSE TO WIRE DROP FROM CABINET AS POSSIBLE.
7. ADD CONDUIT 041953-07 TO COVER EXPOSED WIRES.
8. INSTALL GASKET ON BACKSIDE OF ONE PLACE AFTER INSTALLATION OF THERMOSTAT, MAKING SURE THAT THE GASKET COVERS AND SEALS THE HOLE THAT THE WIRES PASS THROUGH.
9. CONNECTS TO REAR OF SATELLITE PREP PLATE.
10. CONNECTS TO FRONT OF SATELLITE PREP PLATE.
11. SEE WIRING INSTL-BODY,12V FOR ADDITIONAL INFORMATION.
12. PLACE CONNECTOR HERE TO MAKE CONNECTION TO WIRE ASM. USE CONNECTOR 058028-01-000 (2).

FOR ELECTRICAL TORQUE SPECIFICATIONS SEE DWG NO. 128783-01-000

X-X
FOR ELECTRICAL CALLOUTS SEE DWG NO. 121339-01-000

1B1 265

FIRST USED
10 J32H

DO NOT SCALE DRAWING

TITLE:
WIRING INSTL-BODY,12V

SHEET 2 | PART NO 171650 | REV

3/4/2010

DWG NO 171650

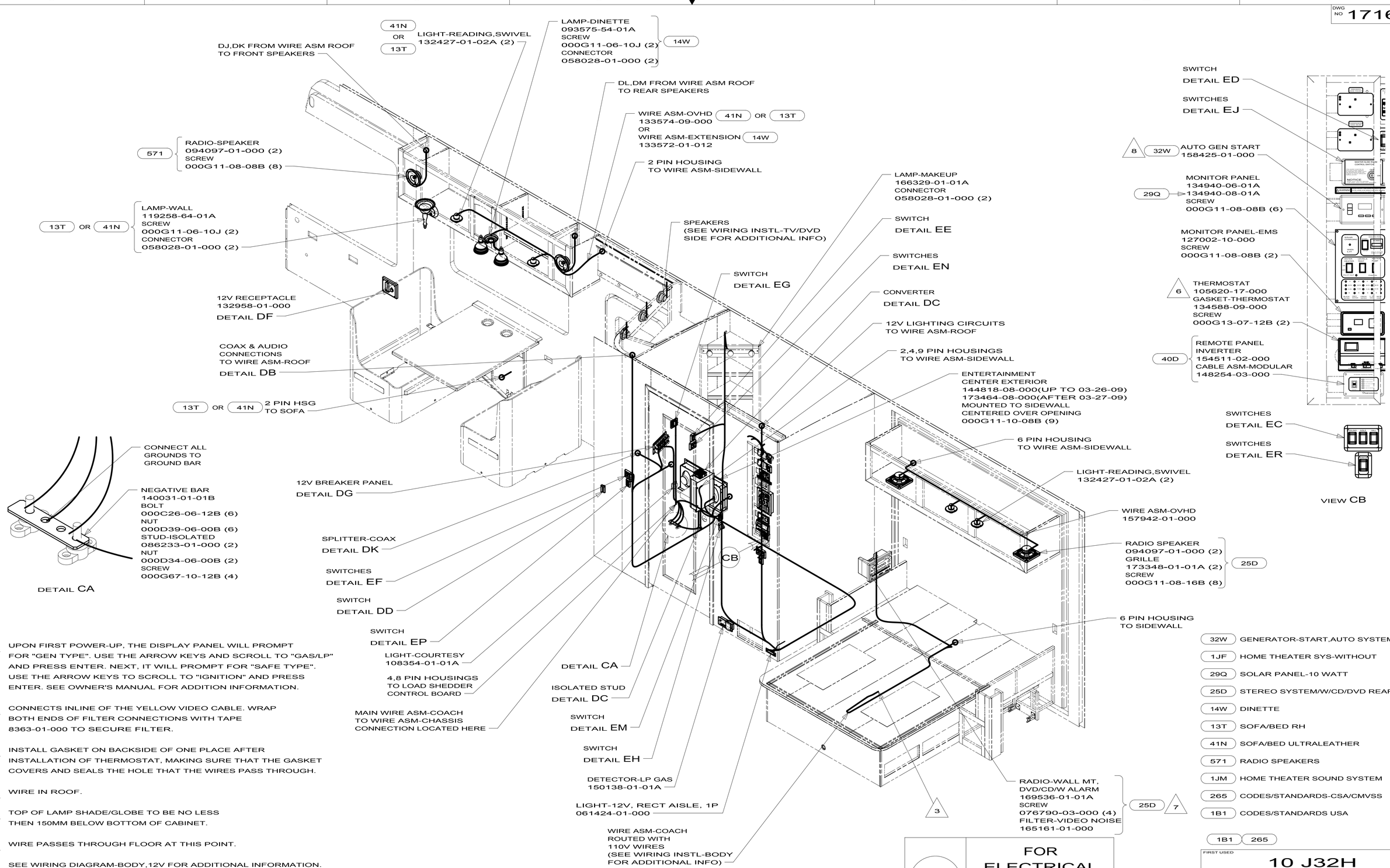

8 UPON FIRST POWER-UP, THE DISPLAY PANEL WILL PROMPT FOR "GEN TYPE". USE THE ARROW KEYS AND SCROLL TO "GAS/LP" AND PRESS ENTER. NEXT, IT WILL PROMPT FOR "SAFE TYPE". USE THE ARROW KEYS TO SCROLL TO "IGNITION" AND PRESS ENTER. SEE OWNER'S MANUAL FOR ADDITION INFORMATION.

7 CONNECTS INLINE OF THE YELLOW VIDEO CABLE. WRAP BOTH ENDS OF FILTER CONNECTIONS WITH TAPE 8363-01-000 TO SECURE FILTER.

6 INSTALL GASKET ON BACKSIDE OF ONE PLACE AFTER INSTALLATION OF THERMOSTAT, MAKING SURE THAT THE GASKET COVERS AND SEALS THE HOLE THAT THE WIRES PASS THROUGH.

5 WIRE IN ROOF.

4 TOP OF LAMP SHADE/GLOBE TO BE NO LESS THEN 150MM BELOW BOTTOM OF CABINET.

3 WIRE PASSES THROUGH FLOOR AT THIS POINT.

2. SEE WIRING DIAGRAM-BODY,12V FOR ADDITIONAL INFORMATION.

1. ALL WIRES TO BE CLAMPED WITH CLAMP 010495-01-000 OR WIRE TIE 008343-02-000 EVERY 600MM UNLESS OTHERWISE SPECIFIED.

NOTES:

32W	GENERATOR-START,AUTO SYSTEM
1JF	HOME THEATER SYS-WITHOUT
29Q	SOLAR PANEL-10 WATT
25D	STEREO SYSTEM/W/CD/DVD REAR
14W	DINETTE
13T	SOFA/BED RH
41N	SOFA/BED ULTRALEATHER
571	RADIO SPEAKERS
1JM	HOME THEATER SOUND SYSTEM
265	CODES/STANDARDS-CSA/CMVSS
1B1	CODES/STANDARDS USA

1B1 265

FOR ELECTRICAL TORQUE SPECIFICATIONS SEE DWG NO. 128783-01-000

X-X

FOR ELECTRICAL CALLOUTS SEE DWG NO. 121339-01-000

FIRST USED 10 J32H

DO NOT SCALE DRAWING

TITLE: WIRING INSTL-BODY,12V

SHEET 3 PART NO 171650 REV

3/4/2010

DWG NO 171650

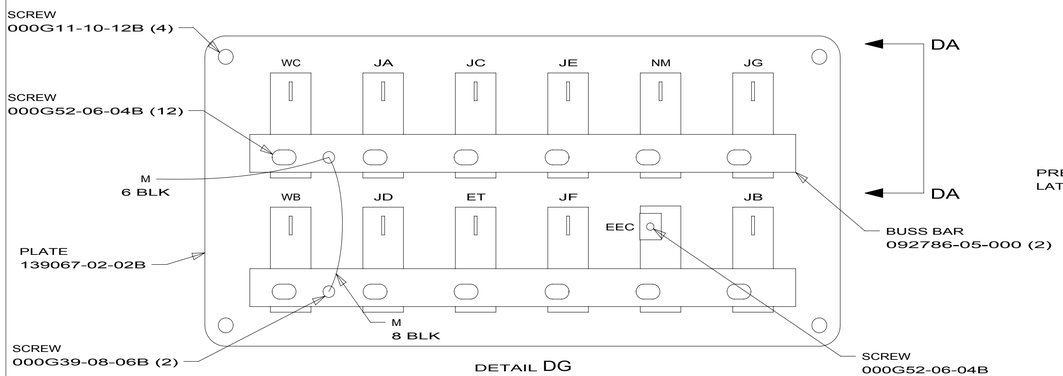

DETAIL DG
(BACK VIEW)

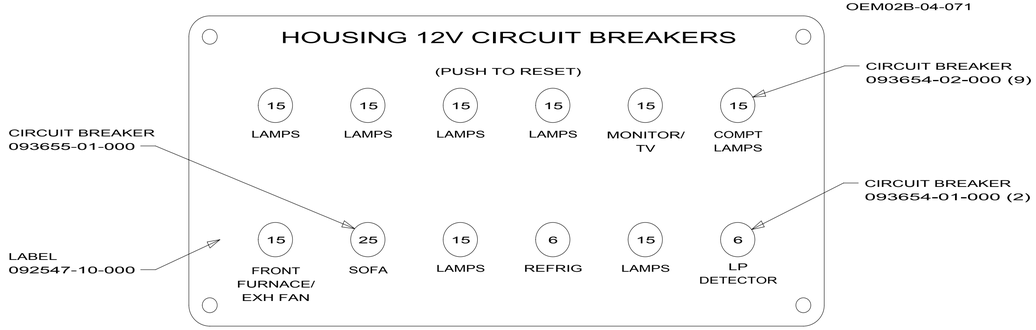

DETAIL DG
(FRONT VIEW)

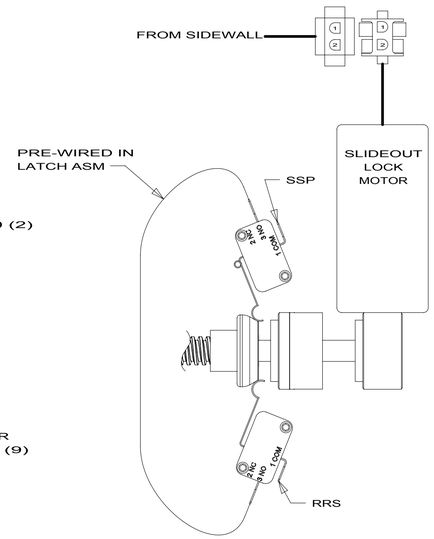

DETAIL DJ
(FRONT)

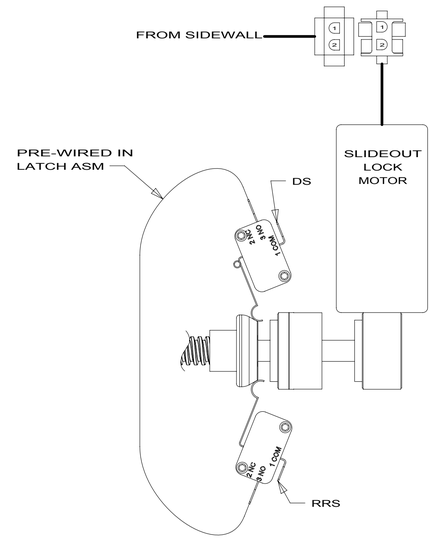

DETAIL DH
(FRONT)

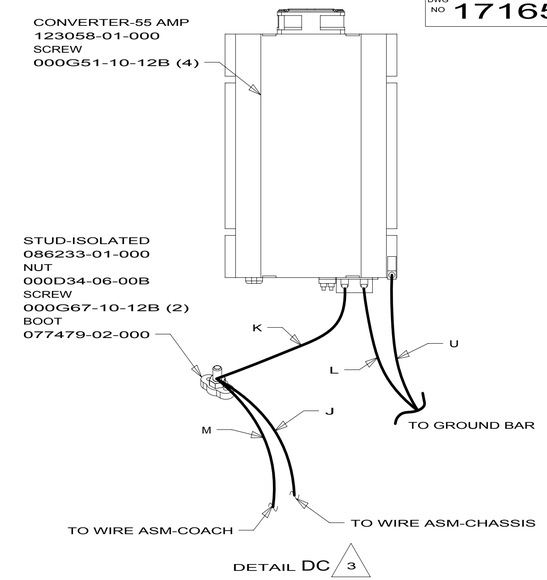

DETAIL DC 3

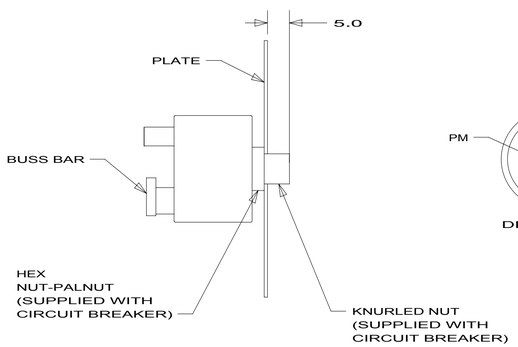

DETAIL DA-DA

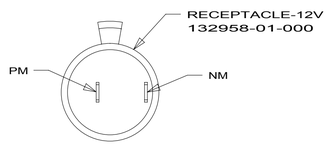

DETAIL DF

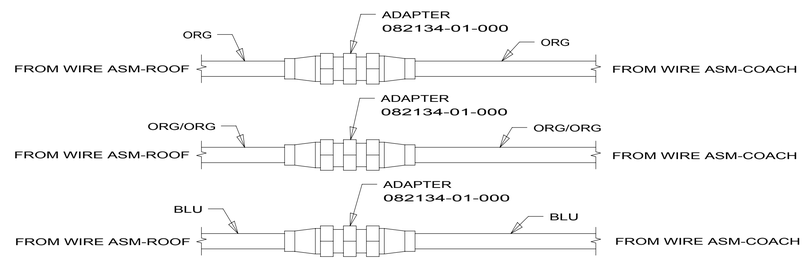

DETAIL DB

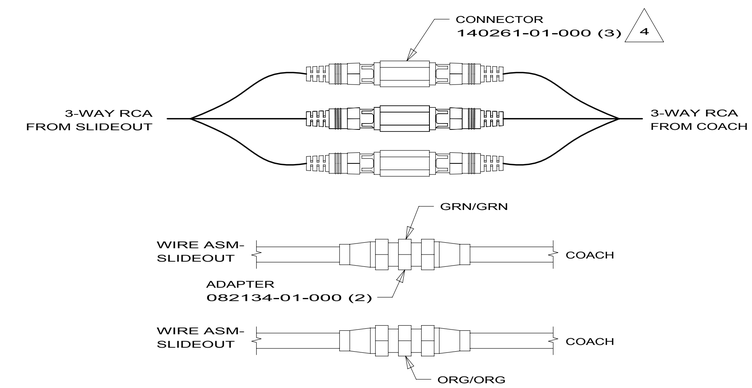

DETAIL DL

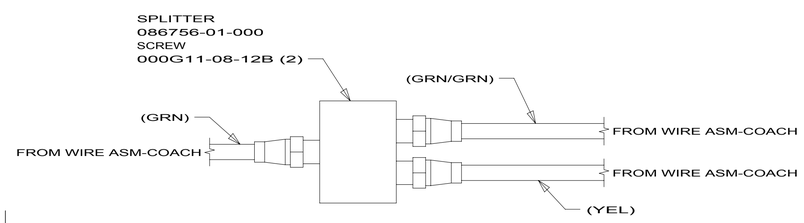

DETAIL DK

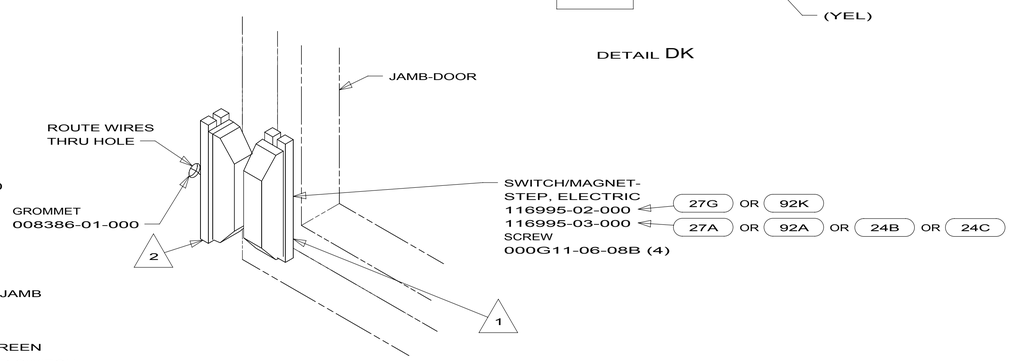

DETAIL DD

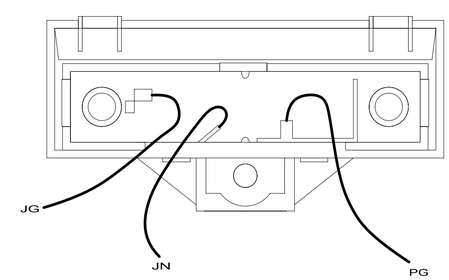

DETAIL DE

27A	EXT FULL BODY PAINT PKG #1
27G	EXTERIOR GRAPHICS PACKAGE #1
92K	EXTERIOR GRAPHICS PACKAGE #2
92A	EXT FULL BODY PAINT PKG # 2
24B	EXT FULL BODY PAINT PKG #4
24C	EXT FULL BODY PAINT PKG # 3
265	CODES/STANDARDS-CSA/CMVSS
1B1	CODES/STANDARDS USA

1B1 265

NOTES:

4. WRAP BOTH ENDS WITH TAPE 8363-01-000 TO SECURE CONNECTION.
3. FOR POSITIONING DIMENSIONS SEE WIRING INSTL-BODY,110V.
2. MOUNT SWITCH AND SPACER TO BLOCK ON JAMB ADJUST HEIGHT TO MATCH MAGNET.
1. MOUNT MAGNET USING PILOT HOLES IN SCREEN DOOR FRAME. MOUNT WITH MAGNET TOWARD SWITCH.

FOR ELECTRICAL TORQUE SPECIFICATIONS SEE DWG NO. 128783-01-000

X-X FOR ELECTRICAL CALLOUTS SEE DWG NO. 121339-01-000

FIRST USED 10 J32H

DO NOT SCALE DRAWING

TITLE: WIRING INSTL-BODY,12V

SHEET 4 | PART NO 171650 | REV

3/4/2010

DWG NO 171650

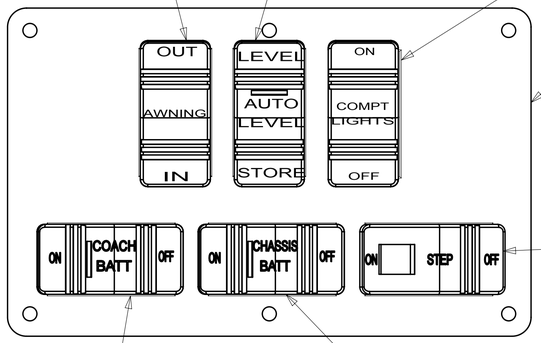

52N
SWITCH-AWNING
108357-07-000
ACTUATOR
108356-12-01A
FFR,FFP,FFN
2
SWITCH-BLANK
096241-03-000

SWITCH-AUTO LEVEL
108357-18-000
ACTUATOR-SWITCH
108356-15-01A
CIRCUITS SSD,SSE,
SSC,SSE,SSF

SWITCH-COMPT LIGHTS
108357-01-000
ACTUATOR-SWITCH
108356-14-01A
CIRCUITS WC,WA

PLATE-SWITCH
158431-03-04B
SCREW
000G11-06-10B (6)

SWITCH-STEP
108357-19-000
CIRCUITS ER,ES

SWITCH-COACH BATT
108357-17-000
ACTUATOR-SWITCH
108356-19-01A
CIRCUITS KF,LG,
LJ,LJ,LH,KF,KF,LK

SWITCH-CHASSIS BATT
108357-17-000
ACTUATOR-SWITCH
108356-20-01A
CIRCUITS UUC,TTY,UUB,
UUB,TTZ,UUC,UUC,UUA

DETAIL EA 3

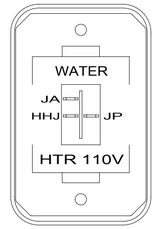

SWITCH-ROCKER
135740-06-01A
SWITCH-BASE
135741-01-01A
SWITCH-BEZEL
135742-35-02A
SCREW
000G11-08-08B (2)

DETAIL ED

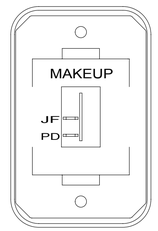

SWITCH-ROCKER
135740-01-01A
SWITCH-BASE
135741-01-01A
SWITCH-BEZEL
135742-08-02A
SCREW
000G11-08-08B (2)

DETAIL EE

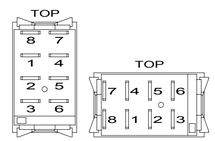

DETAIL EK

LABEL-SLIDEOUT,DRIVERS,FRT
163992-01-01A

DRIVER'S SIDE FRONT

SLIDEOUT-ELEC,FRONT
171341-01-000(2)
SCREW
076790-05-000 (4)

CONNECT TO 12-PIN
HOUSING WITH CIRCUITS
WJ,GGE,GGF,GGD,
DR,DU,WP,WN.

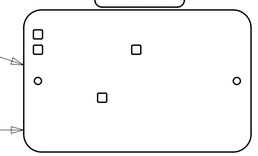

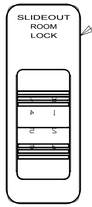

PLATE-SWITCH
144363-09-02B
SWITCH
108357-06-000
ACTUATOR
108356-01-01A
NUT
000D65-08-00B (2)
LABEL
116220-02-000
CONECTS TO
CIRCUITS PPM
,PPN,PPS,PPT.

LABEL-SLIDEOUT,PASS,REAR
163992-03-01A

PASSENGER'S SIDE REAR

CONNECT TO 12-PIN
HOUSING WITH CIRCUITS
WWE,MMB,MMD,MMA,MMC,
LLZ,WWG,WWF.

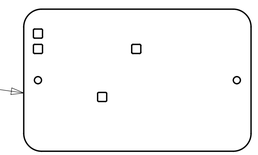

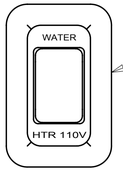

SEE DETAIL ED

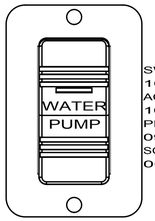

SWITCH-PUMP
108357-15-000
ACTUATOR
108356-23-01A
PLATE
098351-07-03A
SCREW
000G11-06-10B (2)

DETAIL EH

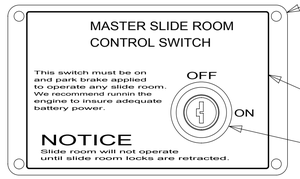

PLATE-KEY, SLIDE ROOM
163987-01-02B
SCREW
076790-05-000 (4)

LABEL-SLIDEROOM CONTROL, MAN
163988-02-01A

SWITCH-KEY,SPST-ILLINOIS LCK
163097-01-000
(CONNECTS TO CIRCUITS DY & DDJ)

WARNING CRUSH HAZARD. Keep people and objects clear of the inside and the outside of the slideout room when operating. Failure to comply could result in death or serious injury.

LABEL-WARNING, SLIDEOUT
116549-01-000

DETAIL EJ

SWITCH-PUMP
108357-15-000
ACTUATOR
108356-03-01A
JY,AG,JA,AF,JS

SWITCH-SERVICE LAMP
108357-01-000
ACTUATOR
108356-01-01A
WC,WA

SWITCH-AUTO LEVEL
108357-18-000
ACTUATOR-SWITCH
108356-03-01A
SSD,SSE,SSC,SSF,SSE

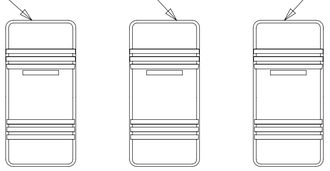

DETAIL EB 3

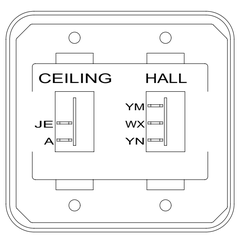

SWITCH-ROCKER
135740-01-01A
135740-02-01A
SWITCH-BASE
135741-02-01A
SWITCH-BEZEL
135742-16-02A
SCREW
000G11-08-08B (4)

DETAIL EF

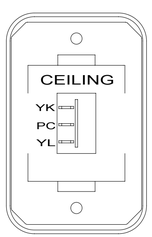

SWITCH-ROCKER
135740-02-01A
SWITCH-BASE
135741-01-01A
SWITCH-BEZEL
135742-07-02A
SCREW
000G11-08-08B (2)

DETAIL EL

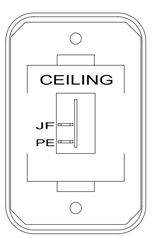

SWITCH-ROCKER
135740-01-01A
SWITCH-BASE
135741-01-01A
SWITCH-BEZEL
135742-07-02A
SCREW
000G11-08-08B (2)

DETAIL EM

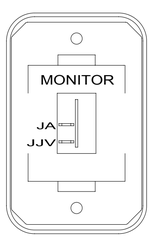

SWITCH-ROCKER
135740-01-01A
SWITCH-BASE
135741-01-01A
SWITCH-BEZEL
135742-30-02A
SCREW
000G11-08-08B (2)

DETAIL ER

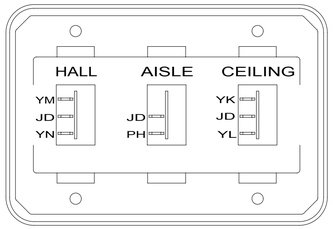

SWITCH-ROCKER
135740-01-01A
135740-02-01A (2)
SWITCH-BASE
135741-03-01A
SWITCH-BEZEL
135742-25-02A
SCREW
000G11-08-08B (4)

DETAIL EC

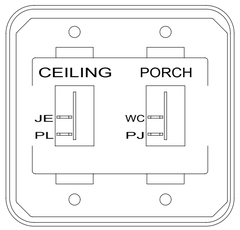

SWITCH-ROCKER
135740-01-01A (2)
SWITCH-BASE
135741-02-01A
SWITCH-BEZEL
135742-19-02A
SCREW
000G11-08-08B (4)

DETAIL EG

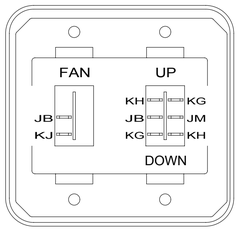

SWITCH-ROCKER
135740-01-01A
135740-03-01A
SWITCH-BASE
135741-02-01A
SWITCH-BEZEL
135742-17-02A
SCREW
000G11-08-08B (4)

DETAIL EN

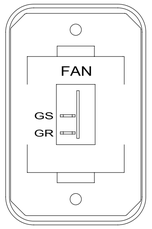

SWITCH-ROCKER
135740-01-01A
SWITCH-BASE
135741-01-01A
SWITCH-BEZEL
135742-12-02A
SCREW
000G11-06-16B (2)

DETAIL EP 41M

41M VENT-POWER VENTILATOR
52N AWNING - PATIO, ELECTRIC
265 CODES/STANDARDS-CSA/CMVSS
1B1 CODES/STANDARDS USA

4 WITHOUT T1B2 OR 53D
3 FOR SWITCH ORIENTATION SEE DETAIL EK.
2 WITHOUT 52N

1. SWITCHES ARE TO BE INSTALLED AS SHOWN ON THIS DRAWING.

NOTES:

FOR ELECTRICAL TORQUE SPECIFICATIONS SEE DWG NO. 128783-01-000

X-X FOR ELECTRICAL CALLOUTS SEE DWG NO. 121339-01-000

1B1 265

FIRST USED 10 J32H

DO NOT SCALE DRAWING

TITLE: WIRING INSTL-BODY,12V

SHEET 5 | PART NO 171650 | REV

3/4/2010

DWG NO 171650

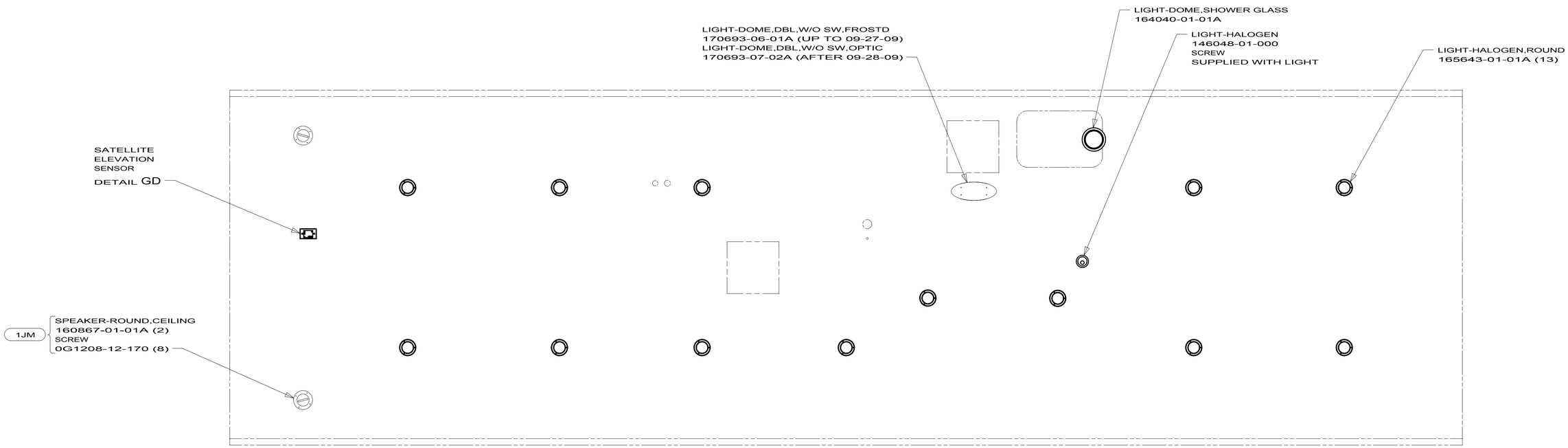

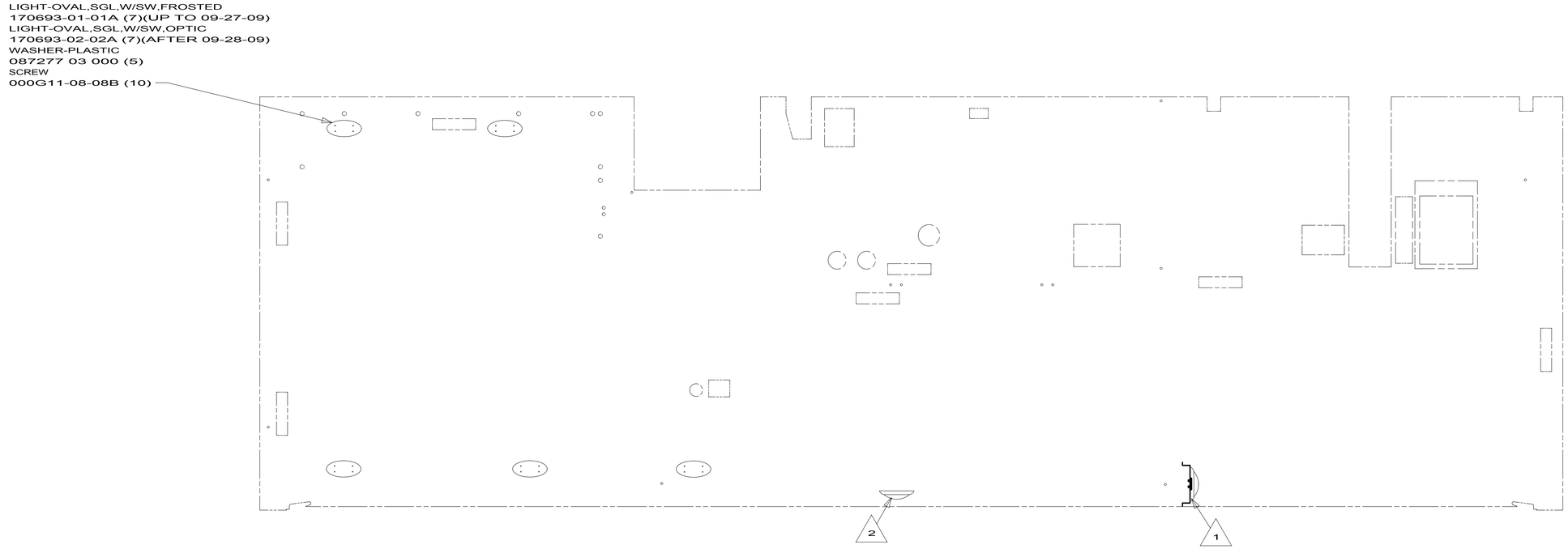

2 LAMP LOCATED IN SERVICE COMPARTMENT.

1 LAMP LOCATED IN POWER CORD COMPARTMENT.

NOTES:

FOR ELECTRICAL TORQUE SPECIFICATIONS SEE DWG NO. 128783-01-000

X-X

FOR ELECTRICAL CALLOUTS SEE DWG NO. 121339-01-000

1JM HOME THEATER SOUND SYSTEM

265 CODES/STANDARDS-CSA/CMVSS

1B1 CODES/STANDARDS USA

1B1 265

FIRST USED 10 J32H

DO NOT SCALE DRAWING

TITLE: WIRING INSTL-BODY,12V

SHEET 6 | PART NO 171650 | REV

3/4/2010

DWG NO 171650

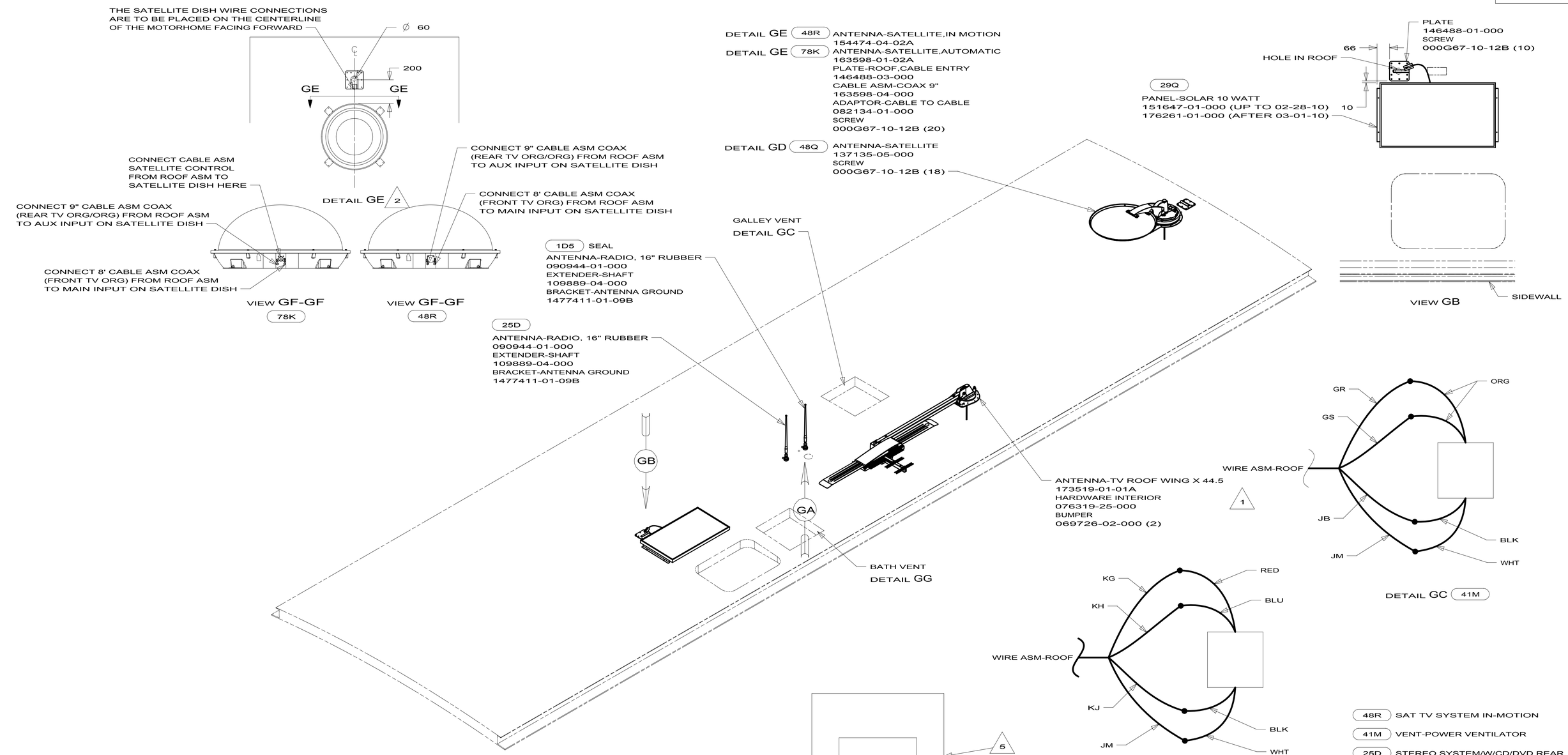

4 SENSOR SUPPLIED WITH SATELLITE ASSEMBLY.

3 WRAP BRACKET LEGS AROUND ANTENNA BASE.

2 REMOVE ALL SHIPPING RESTRAINTS AND FIRMLY INSERT THE SUPPLIED PLUGS INTO THE APPROPRIATE SIZED HOLES AS SPECIFIED IN THE INSTALLATION PROCESS.

1 SEE ANTENNA INSTALLATION MANUAL FOR CORRECT INSTALLATION PROCEDURE.

NOTES:

48R	SAT TV SYSTEM IN-MOTION
41M	VENT-POWER VENTILATOR
25D	STEREO SYSTEM/W/CD/DVD REAR
78K	SATELLITE DISH-AUTOMATIC
48Q	SATELLITE DISH & ELEV.SENSOR
29Q	SOLAR PANEL-10 WATT
1D5	ENTERTAINMENT CENTR/EXT W/CD
265	CODES/STANDARDS-CSA/CMVSS
1B1	CODES/STANDARDS USA

1B1 265

FOR ELECTRICAL TORQUE SPECIFICATIONS SEE DWG NO. 128783-01-000

X-X FOR ELECTRICAL CALLOUTS SEE DWG NO. 121339-01-000

FIRST USED 10 J32H

DO NOT SCALE DRAWING

TITLE: WIRING INSTL-BODY,12V

SHEET 7 PART NO 171650 REV

3/4/2010

DWG NO 171650

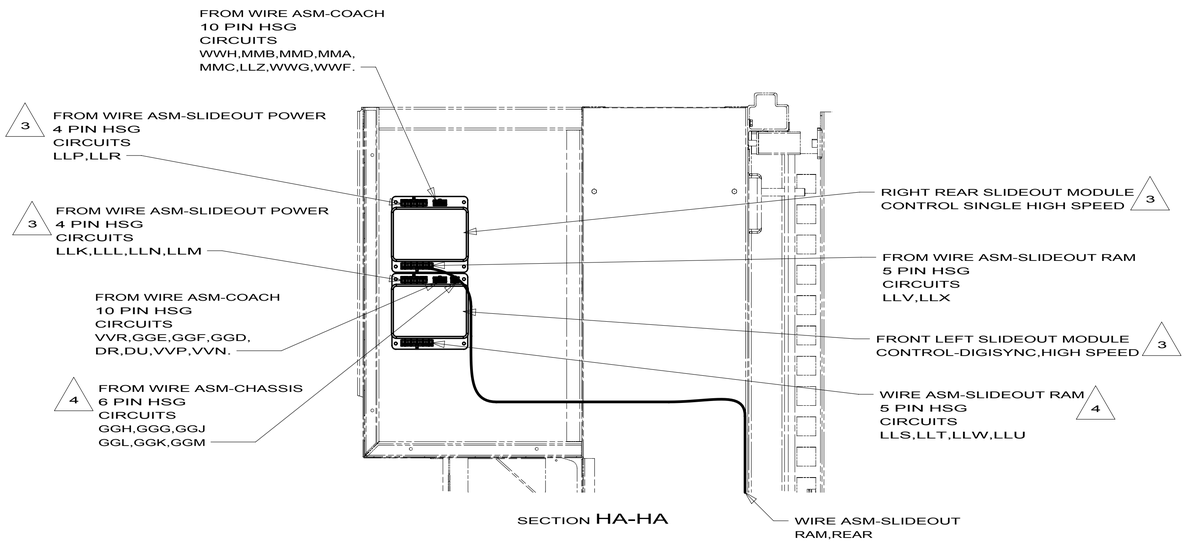

SECTION HA-HA

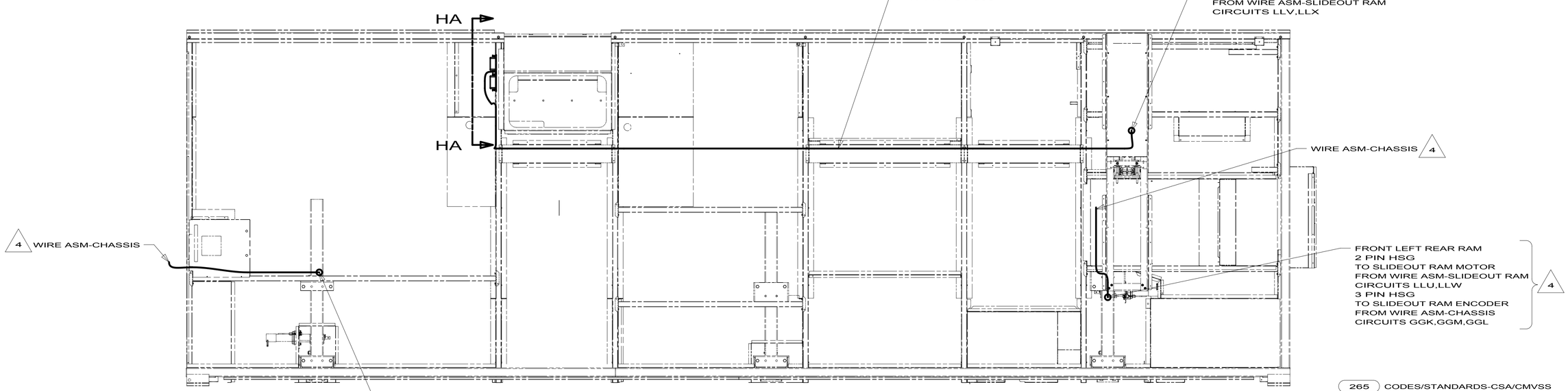

265 CODES/STANDARDS-CSA/CMVSS

1B1 CODES/STANDARDS USA

4 SEE WIRING INSTL-CHASSIS FOR ADDITIONAL INFORMATION.

3 SEE CHASSIS ELECTRICAL BOX ASM FOR ADDITIONAL INFORMATION.

2. SEE WIRING DIAGRAM-BODY,12V FOR ADDITIONAL INFORMATION.

1. ALL WIRES TO BE CLAMPED WITH CLAMP 010495-01-000 OR WIRE TIE 008343-02-000 EVERY 600MM, UNLESS OTHERWISE SPECIFIED.

NOTES:

FOR ELECTRICAL TORQUE SPECIFICATIONS SEE DWG NO. 128783-01-000

X-X FOR ELECTRICAL CALLOUTS SEE DWG NO. 121339-01-000

1B1 265

FIRST USED 10 J32H

DO NOT SCALE DRAWING

TITLE: WIRING INSTL-BODY,12V

SHEET 8 PART NO 171650 REV

3/4/2010

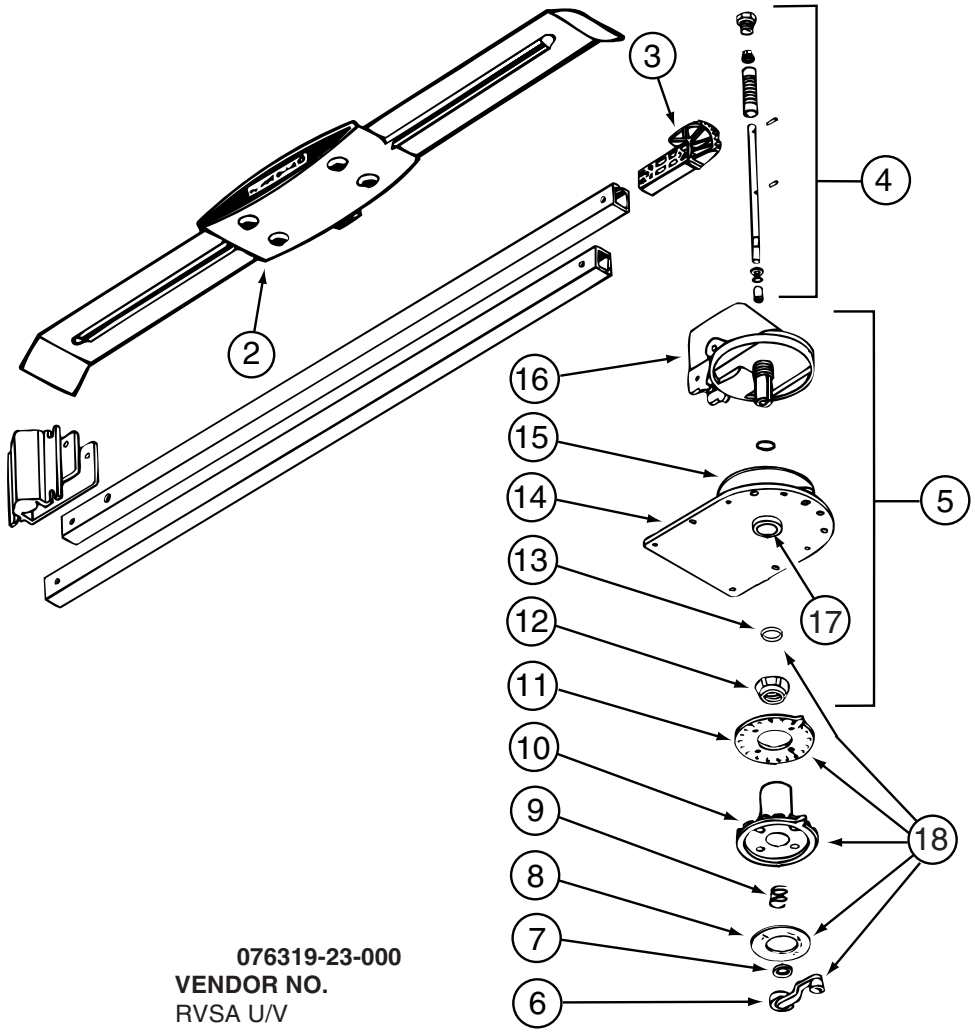

076319-23-000

KEY	PART NUMBER	U/M	DESCRIPTION	VENDOR NO.
2	076319-01-700	EA	HEAD-ANTENNA, AMPLIFIED	RVSA U/V
3	076319-01-701	EA	GEAR-ELEVATING, PLASTIC	2200046
4	076319-01-702	EA	SHAFT ASM-ELEVATING	RP-4000
5	076319-01-711	EA	BASE & LIFT ASM	2762802
7	076319-01-705	EA	GROMMET-NYLON, 7/8"ID	3200658
8	076319-01-708	EA	DECAL-CRANK	5413002
9	076319-01-707	EA	SPRING-HANDLE	2160822
11	076319-01-712	EA	PLATE - CEILING	3200608
12	076319-01-715	EA	NUT (GEAR HOUSING)	2200047
14	076319-01-713	EA	PLATE-BASE, STEEL	3100523
15	076319-01-703	EA	BEARING-NYLON, 5"OD	3200656
16	076319-01-714	EA	HOUSING, ROTATING GEAR	2200049
17	076319-01-704	EA	BEARING-NYLON, 1.25"OD	3200657
18	076319-01-709	EA	HANDLE-HEAD DIRECTIONAL	200644
	076319-01-716	EA	TUBING, ELEVATING	RP-2900

CONTACT WINNEBAGO PART SALES FOR UNLISTED COMPONENT(S)

COPYRIGHT © 2009 WINNEBAGO INDUSTRIES INC.

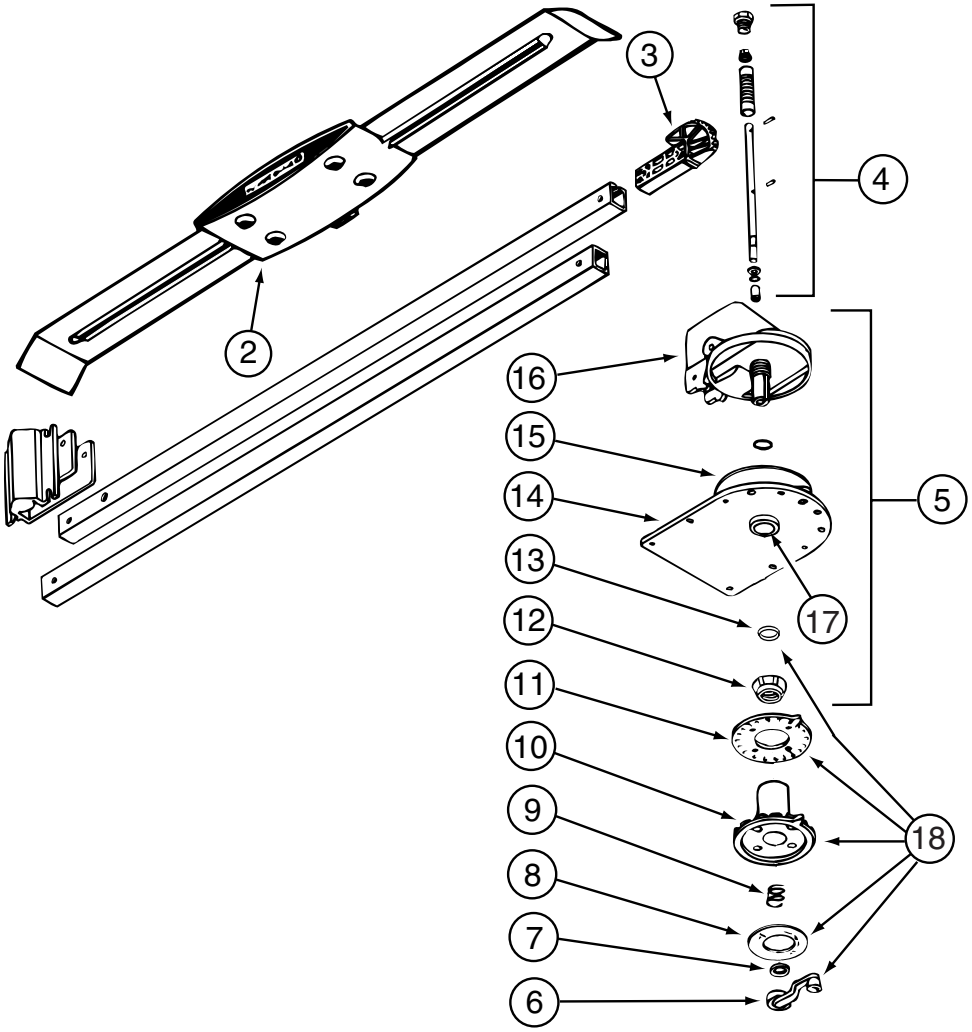

076319-25-000

KEY	PART NUMBER	U/M	DESCRIPTION	VENDOR NO.
6	076319-01-706	EA	CRANK-W/SET SCREW UNIV/BEIGE	2750897
6	120233-01-710	EA	HANDLE-CRANK W/SCREW - WHITE	RP-6795
8	076319-01-708	EA	DECAL-CRANK	5413002
10	076319-25-700	EA	DIRECTIONAL HANDLE(WHITE)	3200612
11	076319-25-701	EA	PLATE - CEILING(WHITE)	3200609
13	120233-01-709	EA	WASHER-NYLON	RP-2658

CONTACT WINNEBAGO PART SALES FOR UNLISTED COMPONENT(S)

COPYRIGHT © 2009 WINNEBAGO INDUSTRIES INC.

087694-01-000

KEY	PART NUMBER	U/M	DESCRIPTION	VENDOR NO.
	087694-01-700	EA	BULB	GE561

COPYRIGHT © 2009 WINNEBAGO INDUSTRIES INC.

108354-01-01A

KEY	PART NUMBER	U/M	DESCRIPTION	VENDOR NO.
	108354-01-700	EA	BULB-COURTESY LIGHT	395-B

COPYRIGHT © 2009 WINNEBAGO INDUSTRIES INC.

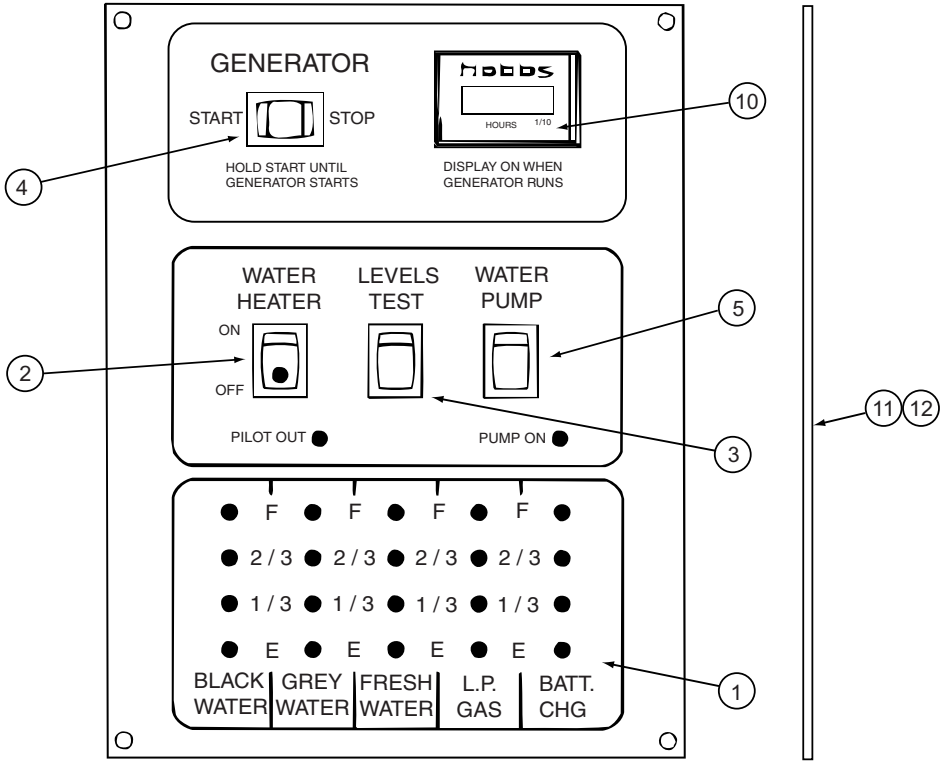

134940-06-01A

KEY	PART NUMBER	U/M	DESCRIPTION	VENDOR NO.
1	134940-01-702	EA	CHASSIS - SILKSCREENED	CC0558-00
2	134940-01-701	EA	SWITCH-SPST/ON-OFF/BLK W/LGT	L0109
3	096983-01-701	EA	SWITCH - SPST/MOM 2 TERMINAL	L0111-00
4	096983-01-702	EA	SWITCH - MOM/OFF/MOM/3 TERM	L0112-00
5	096983-01-703	EA	SWITCH - ON/ON	L0115-00
10	100258-10-701	EA	GAUGE-HR METER ONLY (LCD)	L0775-00
11	134940-06-700	EA	PC BOARD - SENSOR SYSTEM/RED	L5131-02
			CONTACT WINNEBAGO PART SALES FOR UNLISTED COMPONENT(S)	

134940-07-01A

KEY	PART NUMBER	U/M	DESCRIPTION	VENDOR NO.
1	134940-01-702	EA	CHASSIS - SILKSCREENED	CC0558-00
2	134940-01-701	EA	SWITCH-SPST/ON-OFF/BLK W/LGT	L0109
3	096983-01-701	EA	SWITCH - SPST/MOM 2 TERMINAL	L0111-00
4	096983-01-703	EA	SWITCH - ON/ON	L0115-00
5	134940-02-700	EA	SWITCH - DUMMY	L0118
11	134940-06-700	EA	PC BOARD - SENSOR SYSTEM/RED	L5131-02
			CONTACT WINNEBAGO PART SALES FOR UNLISTED COMPONENT(S)	

COPYRIGHT © 2009 WINNEBAGO INDUSTRIES INC.

134940-08-01A

KEY	PART NUMBER	U/M	DESCRIPTION	VENDOR NO.
1	134940-04-700	EA	CHASSIS - SILKSCREENED	CE0136-00
2	134940-01-701	EA	SWITCH-SPST/ON-OFF/BLK W/LGT	L0109
3	096983-01-701	EA	SWITCH - SPST/MOM 2 TERMINAL	L0111-00
4	096983-01-702	EA	SWITCH - MOM/OFF/MOM/3 TERM	L0112-00
5	096983-01-703	EA	SWITCH - ON/ON	L0115-00
10	100258-10-701	EA	GAUGE-HR METER ONLY (LCD)	L0775-00
11	134940-06-700	EA	PC BOARD - SENSOR SYSTEM/RED	L5131-02
12	134940-04-701	EA	BOARD - PC - SOLAR LIGHT	L5121-01
			CONTACT WINNEBAGO PART SALES FOR UNLISTED COMPONENT(S)	

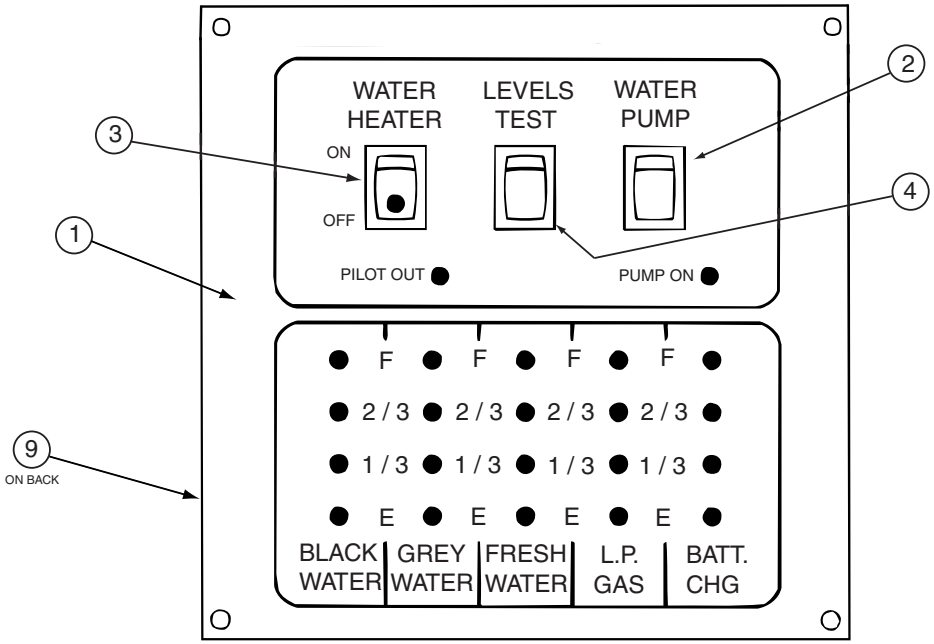

134940-10-01A

KEY	PART NUMBER	U/M	DESCRIPTION	VENDOR NO.
1	134940-10-700	EA	SILKSCREENED CHASSIS	CE0129-00
2	096983-01-703	EA	SWITCH - ON/ON	L0115-00
3	134940-01-701	EA	SWITCH-SPST/ON-OFF/BLK W/LGT	L0109
4	096983-01-701	EA	SWITCH - SPST/MOM 2 TERMINAL	L0111-00
9	134940-06-700	EA	PC BOARD - SENSOR SYSTEM/RED	L5131-02
			CONTACT WINNEBAGO PART SALES FOR UNLISTED COMPONENT(S)	

COPYRIGHT © 2009 WINNEBAGO INDUSTRIES INC.

137135-05-000

KEY	PART NUMBER	U/M	DESCRIPTION	VENDOR NO.
	120233-01-714	EA	CLIP-E	5160818
	120233-01-737	EA	PLATE/INT-W/DIRECTIONAL HDLE	RK-CEIL
	120233-01-738	EA	HDW PKG-HANDLE/SPRING/WASHER	RK-HAND
	120233-04-703	EA	KIT-DIRECTIONAL HDL UPGRADE	RP-RM46
	137135-01-703	EA	KIT ELEV-SHAFT/PLUG/SPRING	RP-4400
	137135-01-704	EA	PIN - 1/4" X 3.25"	2160813
	137135-01-708	EA	TURRET	3100728
	137135-01-710	EA	PLATE - ROTATE LIMIT	3720052
	137135-01-712	EA	BEARING - OUTER	2590347
	137135-01-713	EA	TURRET BASE	3100730
	137135-01-714	EA	GEAR - ELEVATING SHAFT	2200465
	137135-01-715	EA	BEARING - INNER	2590348
	137135-01-717	EA	BOLT - FLAT HEAD	2160362
	137135-01-719	EA	BRACKET - PIVOT	2744945
	137135-01-722	EA	CLAMP	2590343

COPYRIGHT © 2009 WINNEBAGO INDUSTRIES INC.

DWG NO 144818

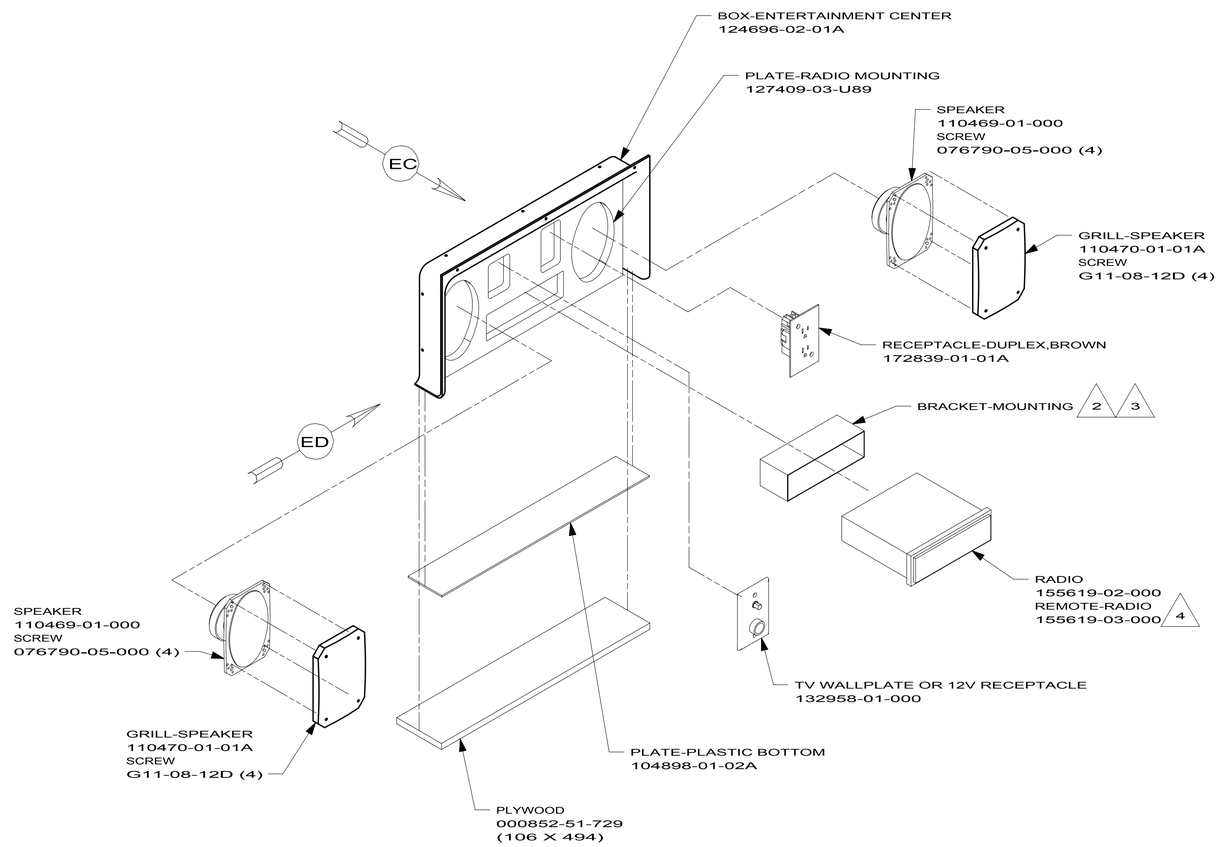

J32H
144818-08

1D5 ENTERTAINMENT CENTER/EXT W/CD

NOTES:

1. SEE WIRING INSTL-BODY FOR ADDITIONAL INFORMATION.

2 BEND TABS ON MOUNTING BRACKET SUPPLIED WITH RADIO, TO HOLD IN PLACE.

3 SUPPLIED WITH RADIO

4 PUT IN INFO CASE.

FOR ELECTRICAL TORQUE SPECIFICATIONS SEE DWG NO. 128783-01-000

X-X FOR ELECTRICAL CALLOUTS SEE DWG NO. 121339-01-000

FIRST USED
04 MOTORHOMES

DO NOT SCALE DRAWING

TITLE:
ENTERTAINMENT CENTER COMPL

SHEET 3 | PART NO 144818 | REV

10/22/2009

DWG NO 144818

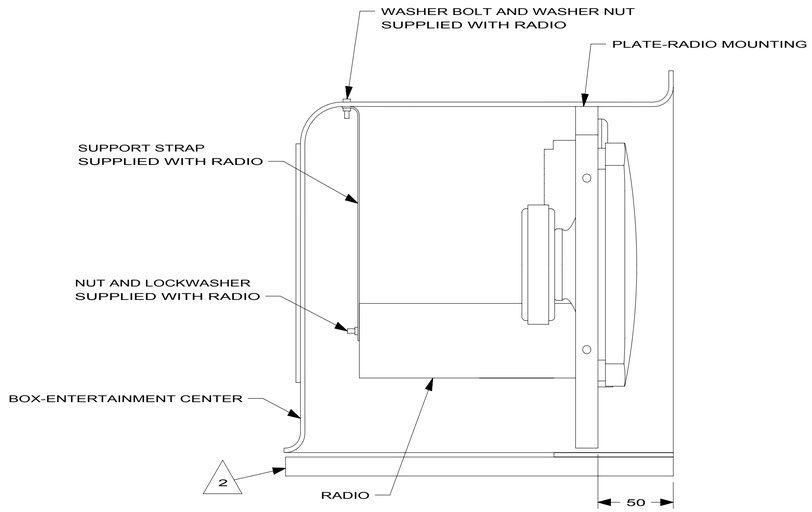

DETAIL EB

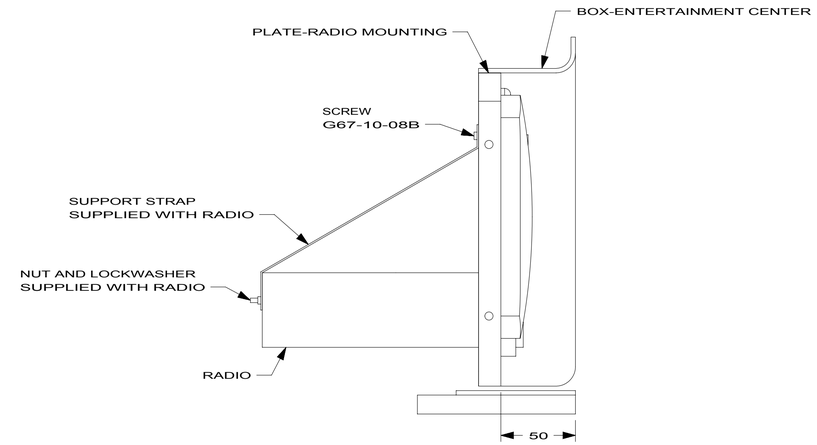

DETAIL ED

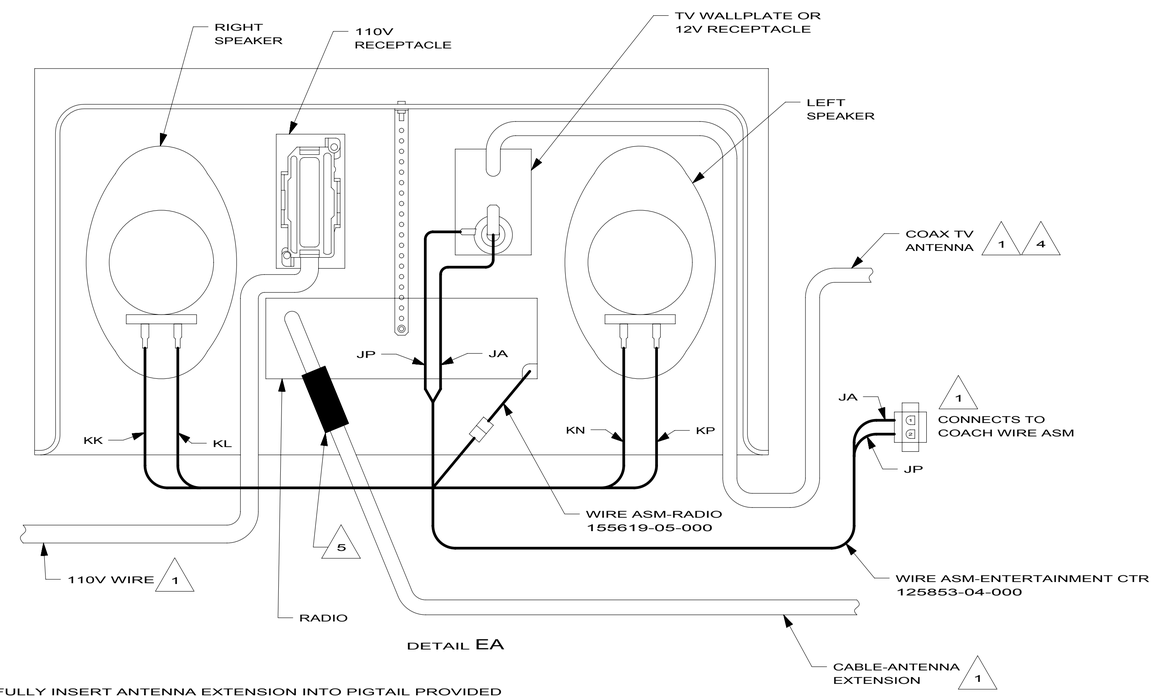

DETAIL EA

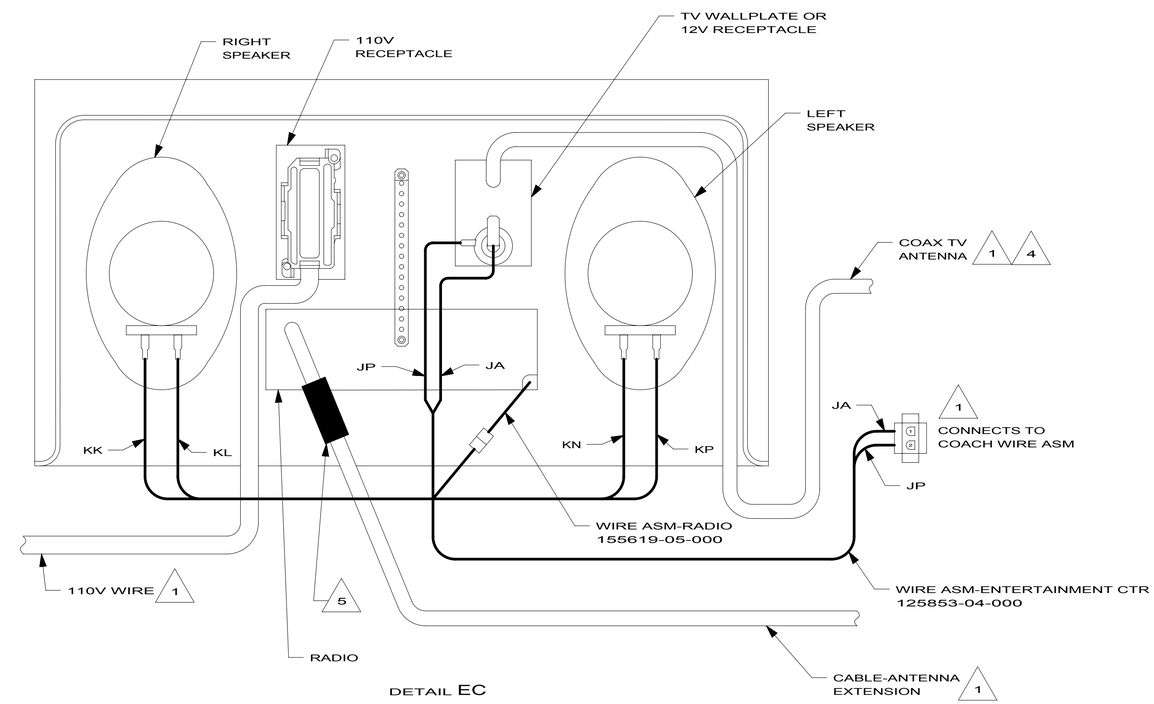

DETAIL EC

5 FULLY INSERT ANTENNA EXTENSION INTO PIGTAIL PROVIDED ON RADIO & WRAP WITH TAPE 008363-01-000 (100mm).

4 COAX ON TABS -02, & -03 ONLY.

2 PLYWOOD ON TAB -02 ONLY.

1 SEE WIRING INSTL-BODY FOR ADDITIONAL INFORMATION.

NOTES:

FOR ELECTRICAL TORQUE SPECIFICATIONS SEE DWG NO. 128783-01-000

X-X FOR ELECTRICAL CALLOUTS SEE DWG NO. 121339-01-000

FIRST USED 04 MOTORHOMES

DO NOT SCALE DRAWING

TITLE: ENTERTAINMENT CENTER COMPL

SHEET 4 | PART NO 144818 | REV

10/22/2009

146048-01-01A

KEY	PART NUMBER	U/M	DESCRIPTION	VENDOR NO.
	123775-01-700	EA	BULB - 10 WATT - HALOGEN	71-JC10

COPYRIGHT © 2009 WINNEBAGO INDUSTRIES INC.

154474-04-01A

KEY	PART NUMBER	U/M	DESCRIPTION	VENDOR NO.
	154474-04-703	EA	BOARD RF ASSEMBLY N/C	100087
	154474-04-705	EA	CABLE OUT DUAL TOP PCBA N/C	20034-1
	154474-04-706	EA	LNB DUAL EAGLE ASPEN N/C	1863-1

154474-04-02A

KEY	PART NUMBER	U/M	DESCRIPTION	VENDOR NO.
	154474-04-702	EA	DOME ONLY-REPLACEMENT-BLACK	1850-B-LP-FS
	154474-04-703	EA	BOARD RF ASSEMBLY N/C	100087
	154474-04-705	EA	CABLE OUT DUAL TOP PCBA N/C	20034-1
	154474-04-706	EA	LNB DUAL EAGLE ASPEN N/C	1863-1

COPYRIGHT © 2009 WINNEBAGO INDUSTRIES INC.

163097-01-000

KEY	PART NUMBER	U/M	DESCRIPTION	VENDOR NO.
	163097-01-700	EA	KEY - #2382 (ILLINOIS LOCK)	2382
	163097-01-701	EA	KEY - #2341 (MILLER DIAL)	PART SALES

COPYRIGHT © 2009 WINNEBAGO INDUSTRIES INC.

163598-01-01A

KEY	PART NUMBER	U/M	DESCRIPTION	VENDOR NO.
	154474-04-706	EA	LNB DUAL EAGLE ASPEN N/C	1863-1
	163598-01-700	EA	BOARD CIRCUIT N/C	1990-RF-LP KIT
	163598-01-701	EA	STUFFED PCB,CWIM DVB N/C	438

163598-01-02A

KEY	PART NUMBER	U/M	DESCRIPTION	VENDOR NO.
	154474-04-702	EA	DOME ONLY-REPLACEMENT-BLACK	1850-B-LP-FS
	154474-04-706	EA	LNB DUAL EAGLE ASPEN N/C	1863-1
	163598-01-700	EA	BOARD CIRCUIT N/C	1990-RF-LP KIT
	163598-01-701	EA	STUFFED PCB,CWIM DVB N/C	438

COPYRIGHT © 2009 WINNEBAGO INDUSTRIES INC.

165170-01-01A

KEY	PART NUMBER	U/M	DESCRIPTION	VENDOR NO.
	165170-01-700	EA	LENS	81230-LENS

COPYRIGHT © 2009 WINNEBAGO INDUSTRIES INC.

169536-01-01A

KEY	PART NUMBER	U/M	DESCRIPTION	VENDOR NO.
	169536-01-700	EA	REMOTE - SERVICE PACK	PSVCAWM970

COPYRIGHT © 2009 WINNEBAGO INDUSTRIES INC.

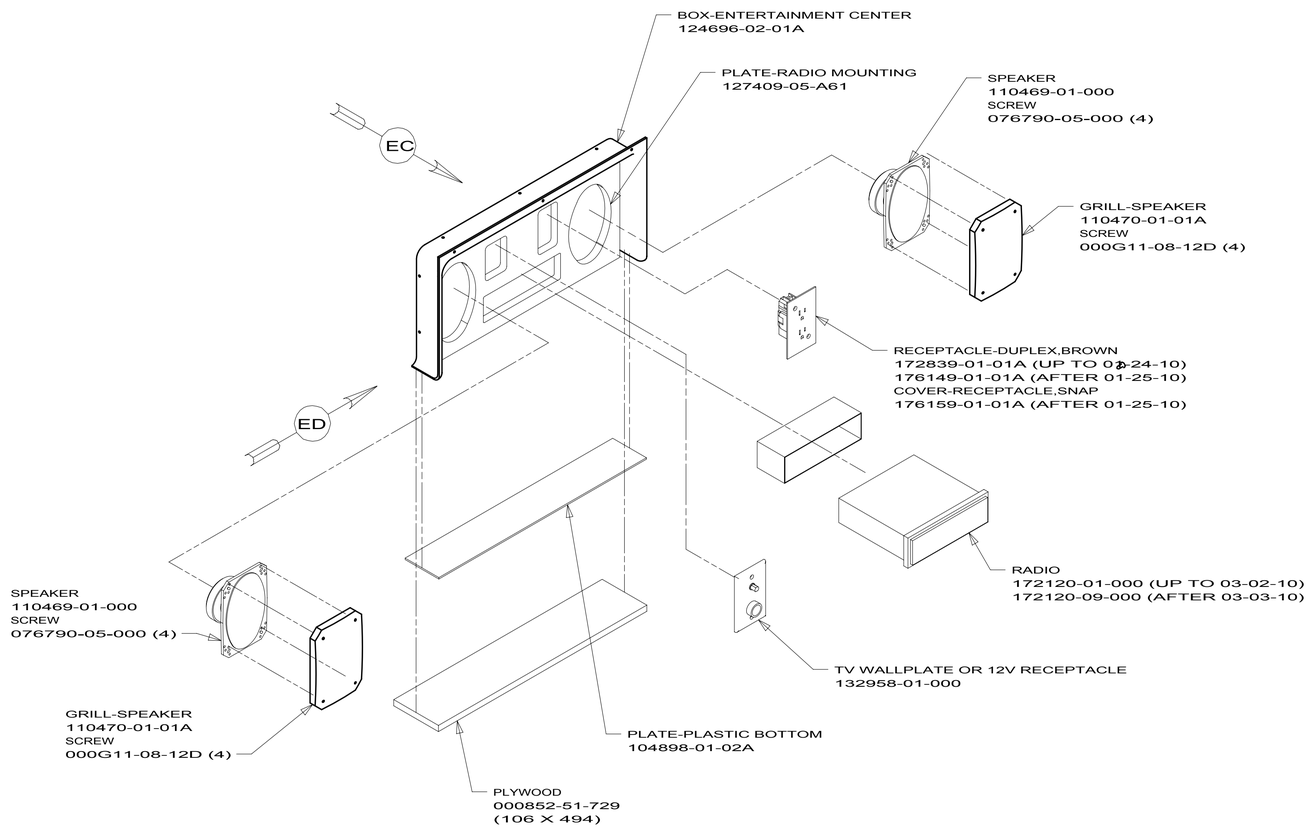

173464-08
J32H
J35P
J37F

1D5 ENTERTAINMENT CENTER/EXT W/CD

FOR ELECTRICAL TORQUE SPECIFICATIONS SEE DWG NO. 128783-01-000

X-X

FOR ELECTRICAL CALLOUTS SEE DWG NO. 121339-01-000

10 MOTORHOMES

ENTERTAINMENT CENTER COMPL

3 173464

NOTES:

1. SEE WIRING INSTL-BODY FOR ADDITIONAL INFORMATION.

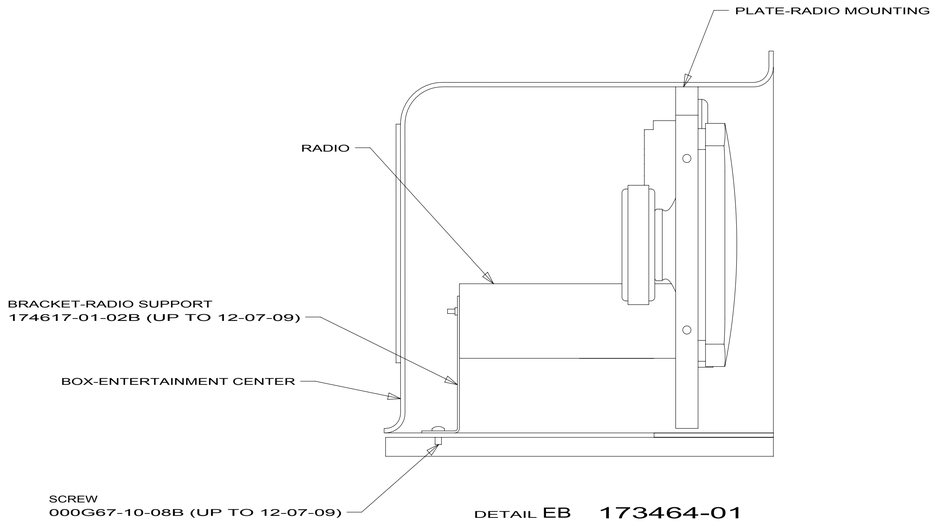

DETAIL EB 173464-01

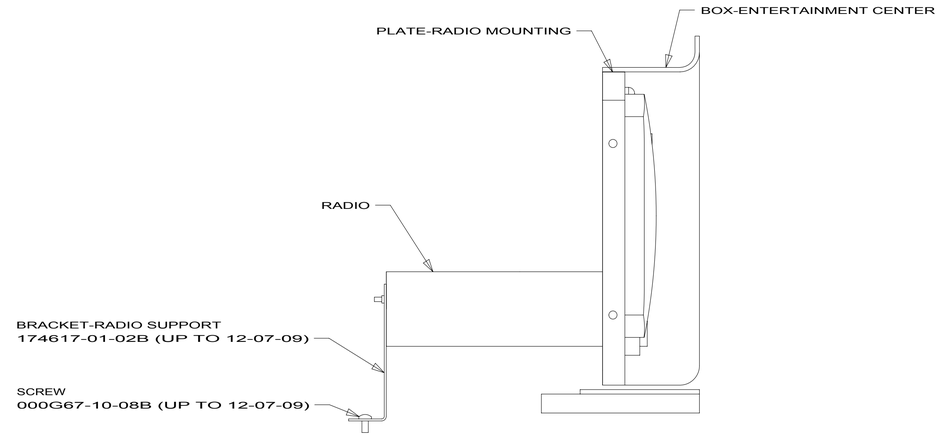

DETAIL ED 173464-03
173464-07
173464-08

173464-01
173464-03
173464-07
173464-08

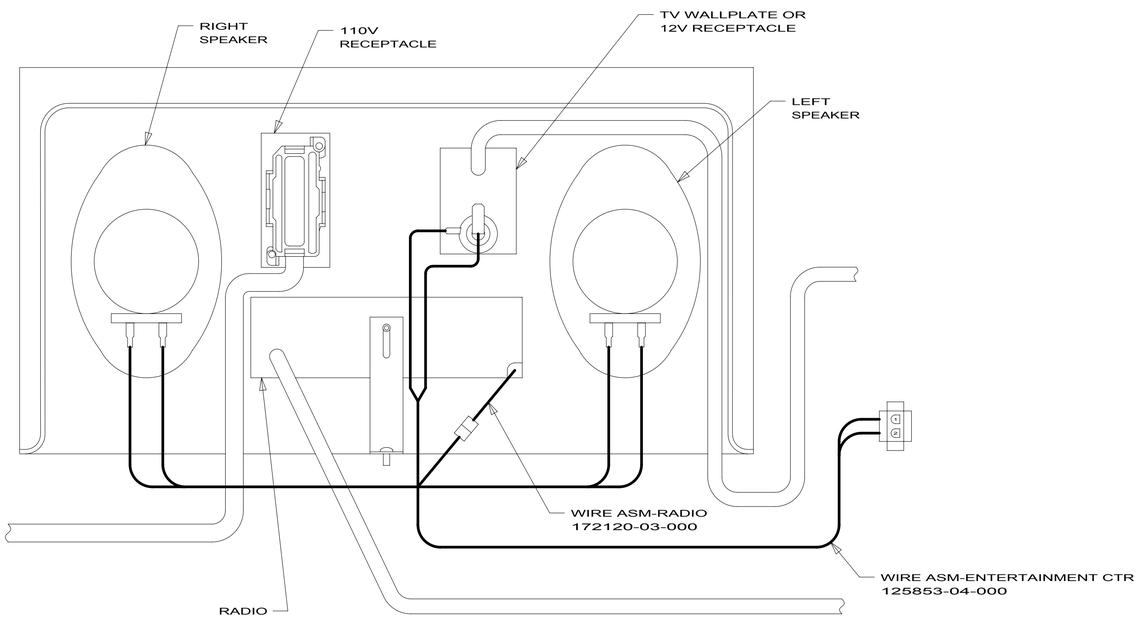

DETAIL EA 173464-01

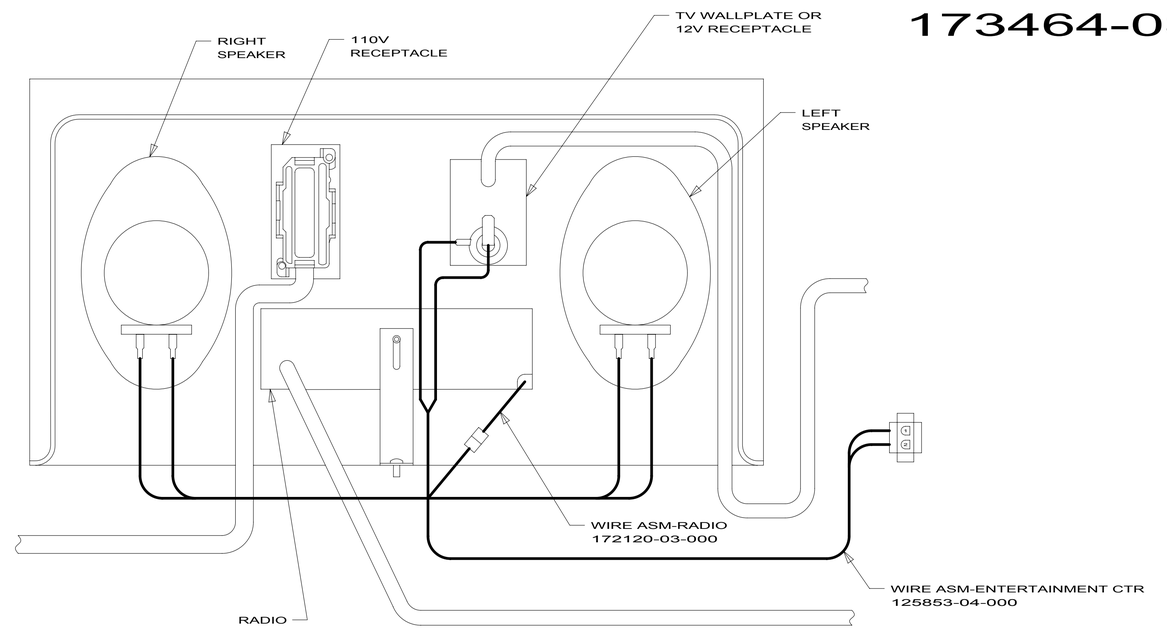

DETAIL EC 173464-03
173464-07
173464-08

1D5 ENTERTAINMENT CENTER/EXT W/CD

FOR ELECTRICAL TORQUE SPECIFICATIONS SEE DWG NO. 128783-01-000

X-X

FOR ELECTRICAL CALLOUTS SEE DWG NO. 121339-01-000

10 MOTORHOMES

ENTERTAINMENT CENTER COMPL

4 173464

2/26/2010

DWG NO 169848

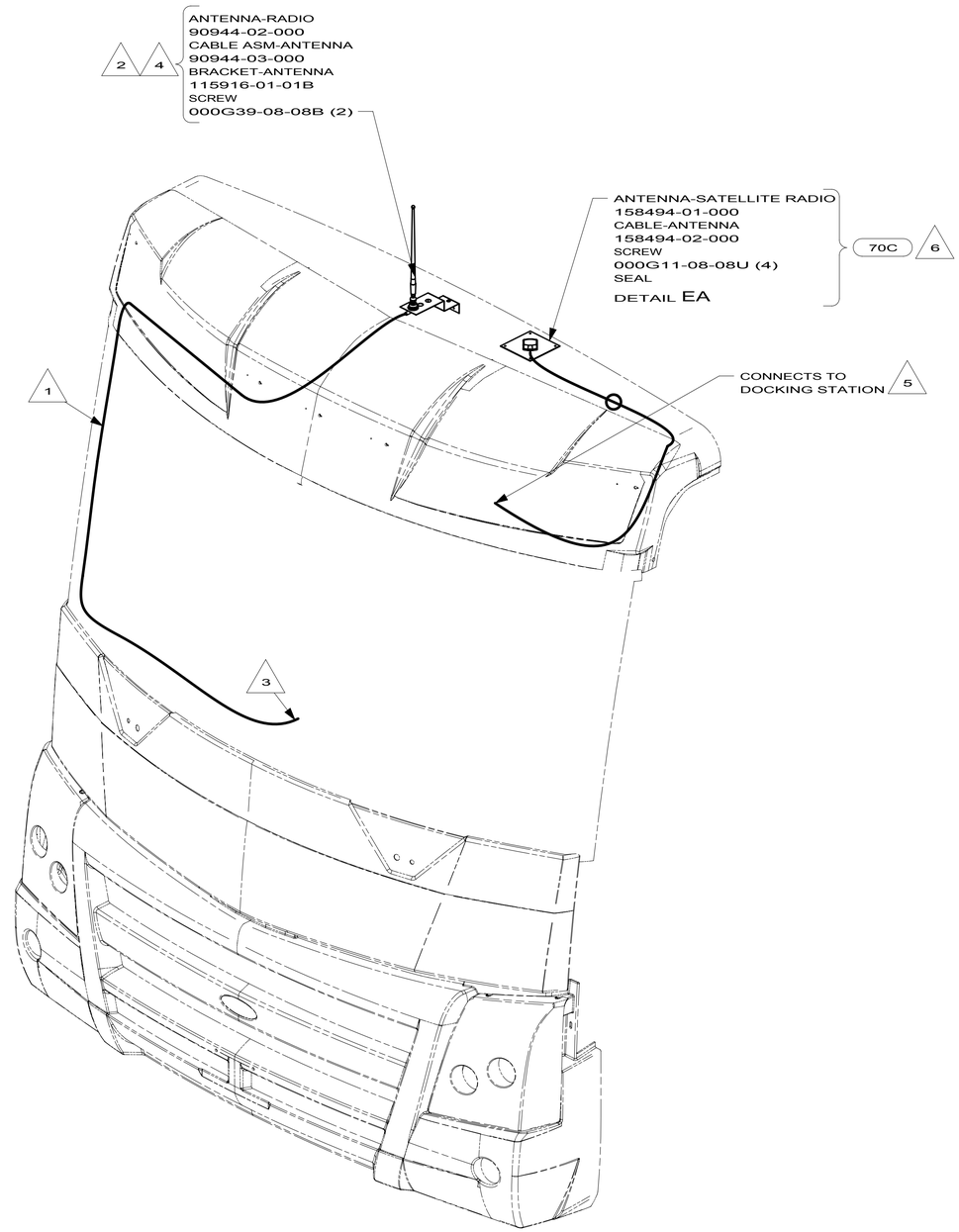

D-Series
E-Series
J-Series
169848-05

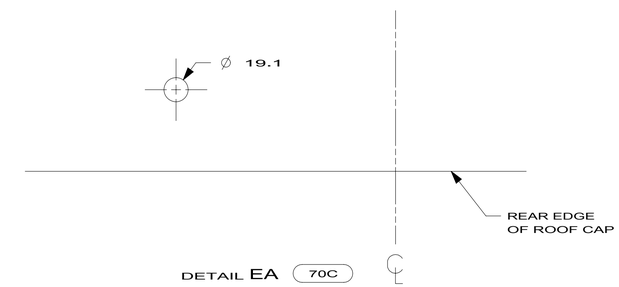

6 MOUNT ANTENNA SUCH THAT BASE IS SQUARE W/REAR OF ROOF CAP & HOLE IS DIRECTLY OVER HOLE IN FIBERGLASS. SEAL HOLE IN ROOF CAP, BASE AT SCREWS.

5 SEE WIRING INSTL-FRONT END FOR ADDITIONAL INFORMATION.

4 USE HOLE IN BRACKET AS GUIDE TO DRILL 13 DIAMETER HOLE IN FIBERGLASS.

3 TO RADIO.

2 SEAL AROUND ANTENNA BASE.

1 ROUTE CABLE ALONG A-POST,UNDER TRIM COVER.

NOTES:

70C RADIO - SATELLITE

265 CODES/STANDARDS-CSA/CMVSS

1B1 CODES/STANDARDS USA

1B1 265

FOR ELECTRICAL TORQUE SPECIFICATIONS SEE DWG NO. 128783-01-000

X-X FOR ELECTRICAL CALLOUTS SEE DWG NO. 121339-01-000

FIRST USED
10 MOTORHOMES

DO NOT SCALE DRAWING

TITLE:
ANTENNA INSTL-RADIO AND CB

SHEET 5 | PART NO 169848 | REV

11/26/2009

DRAWING NO.	FEATURE
169930-01	16L
169930-02	1PV
169930-03	1LI

RELEASE	REV	DATE	DWG NO
	A		169930

REV	ZONE	REVISION RECORD	DATE	DFTR-ORIG

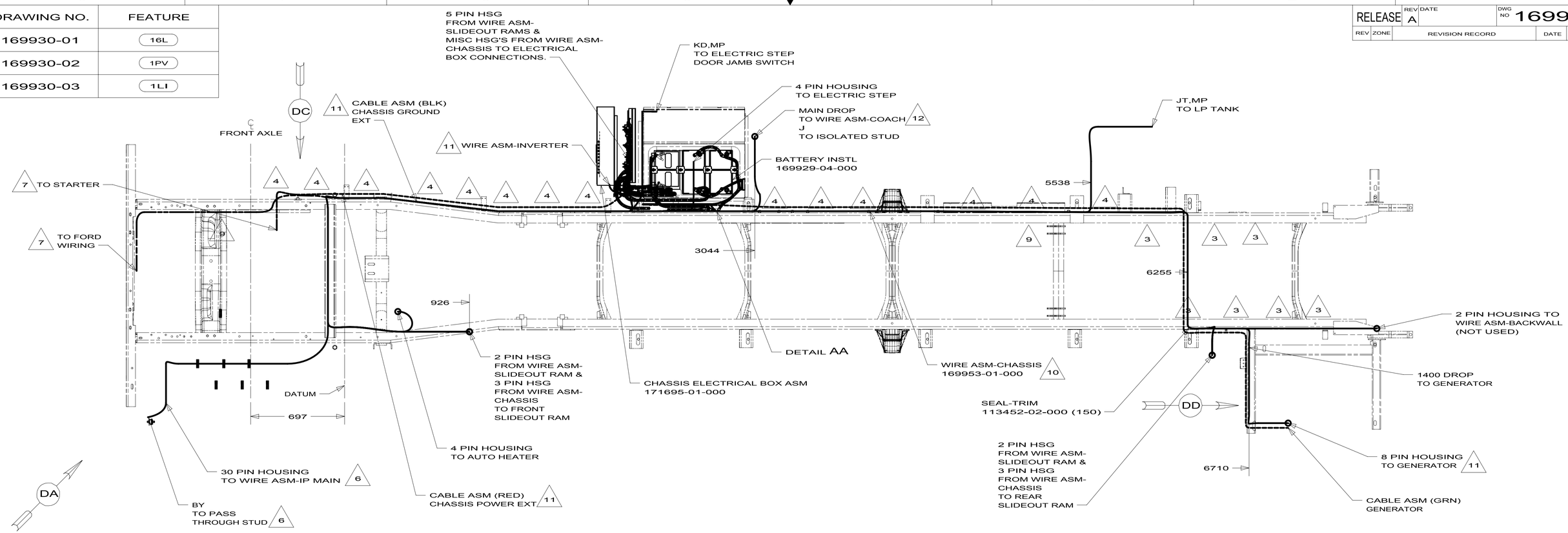

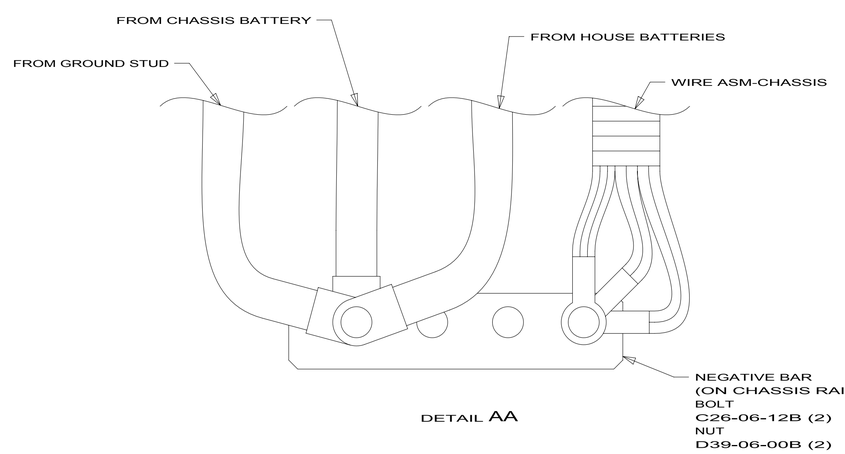

DETAIL AA

1LI	FRTL(FRED)22K-300HP 22.5TIRE
1PV	WORKHORSE 24,000#-22.5 TIRE
16L	FORD 22,000#-22.5 AL WHL
265	CODES/STANDARDS-CSA/CMVSS
1B1	CODES/STANDARDS USA

1B1 265 16L

12 SEE INSTL-BODY,12V FOR ADDITIONAL INFORMATION.

11 SEE BATTERY INSTL FOR ADDITIONAL INFORMATION.

10 COIL UP EXTRA WIRE AND TIE BACK TO LOOM.

9 SECURE SO WIRES DO NOT CONTACT EXHAUST.

8 ROUTE WIRES & CABLE OVER SPRING HANGER AT THIS POINT.

7 SUPPLIED WITH CHASSIS.

6 SEE WIRING INSTL-FRONT END FOR ADDITIONAL INFORMATION.

5 ROUTE WIRES & CABLE INSIDE TOP OF CHASSIS RAIL AT THIS POINT AND TO THE REAR.

4 CLAMP 83610-03-000, SCREW G39-08-12B.

3 CLAMP 83610-01-000, SCREW G39-08-12B.

2. SECURE CONDUIT 41953-09, -10, -11, -13, AND -14 OVER ALL WIRES IN CONTACT WITH SHARP EDGES.

1. LEGEND: WINNEBAGO: CABLE: CHASSIS SUPPLIED WIRING.

NOTES:

FOR ELECTRICAL TORQUE SPECIFICATIONS SEE DWG NO. 128783-01-000

X-X FOR ELECTRICAL CALLOUTS SEE DWG NO. 121339-01-000

COPYRIGHT 2009
WINNEBAGO
INDUSTRIES, INC.

DFTR	ORIG. DATE
CHKR	ALL DIMENSIONS ARE IN MILLIMETERS
P.E.	
M.E.	FIRST USED
DSNR	10 J&K32H

UNSPECIFIED TOLERANCES ARE:

WHOLE DIM (X)	±	3
ONE-PLACE (X.X)	±	1.5
TWO-PLACE (X.XX)	±	0.50
ANGLE	±	1°

MATERIAL:

THIRD ANGLE PROJECTION

DO NOT SCALE DRAWING

TITLE: WIRING INSTL-CHASSIS

SHEET 1 OF 6 | PART NO 169930 | REV

REF: 1

10/7/2009

DWG NO 169930

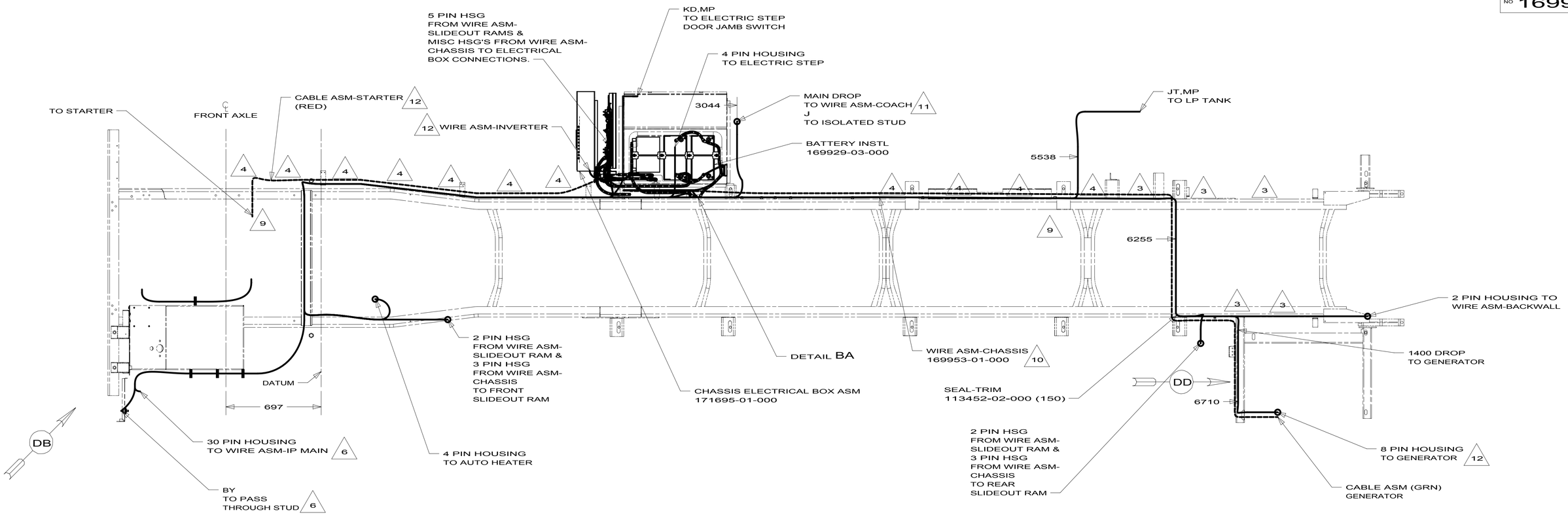

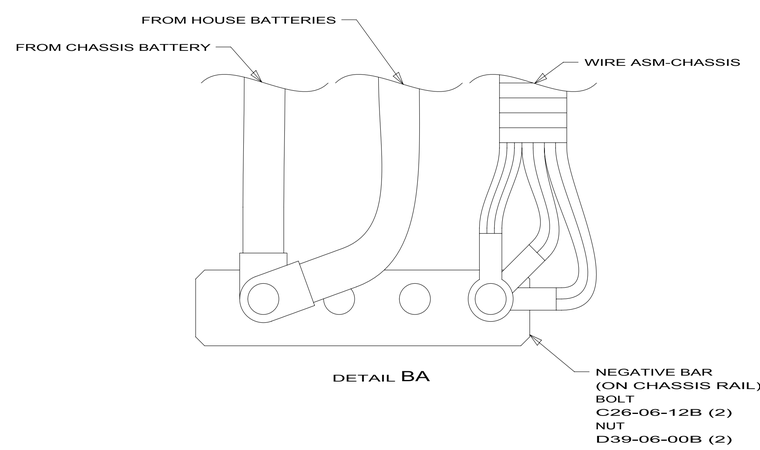

DETAIL BA

12 SEE BATTERY INSTL FOR ADDITIONAL INFORMATION.

11 SEE INSTL-BODY,12V FOR ADDITIONAL INFORMATION.

10 COIL UP EXTRA WIRE AND TIE BACK TO LOOM.

9 SECURE SO WIRES DO NOT CONTACT EXHAUST.

8 ROUTE WIRES & CABLE OVER SPRING HANGER AT THIS POINT.

7 SUPPLIED WITH CHASSIS.

6 SEE WIRING INSTL-FRONT END FOR ADDITIONAL INFORMATION.

5 ROUTE WIRES & CABLE INSIDE CHASSIS RAIL AT THIS POINT AND TO THE REAR.

4 CLAMP 83610-03-000, SCREW G39-08-12B.

3 CLAMP 83610-01-000, SCREW G39-08-12B.

2. SECURE CONDUIT 41953-09, -10, -11, -13, AND -14
OVER ALL WIRES IN CONTACT WITH SHARP EDGES.

1. LEGEND: WINNEBAGO: CABLE: CHASSIS SUPPLIED WIRING.

NOTES:

1PV WORKHORSE 24,000#-22.5 TIRE

265 CODES/STANDARDS-CSA/CMVSS

1B1 CODES/STANDARDS USA

1B1 265 1PV

FOR ELECTRICAL TORQUE SPECIFICATIONS SEE DWG NO. 128783-01-000

X-X FOR ELECTRICAL CALLOUTS SEE DWG NO. 121339-01-000

FIRST USED 10 J&K32H

DO NOT SCALE DRAWING

TITLE: WIRING INSTL-CHASSIS

SHEET 2 PART NO 169930 REV

10/7/2009

DWG NO 169930

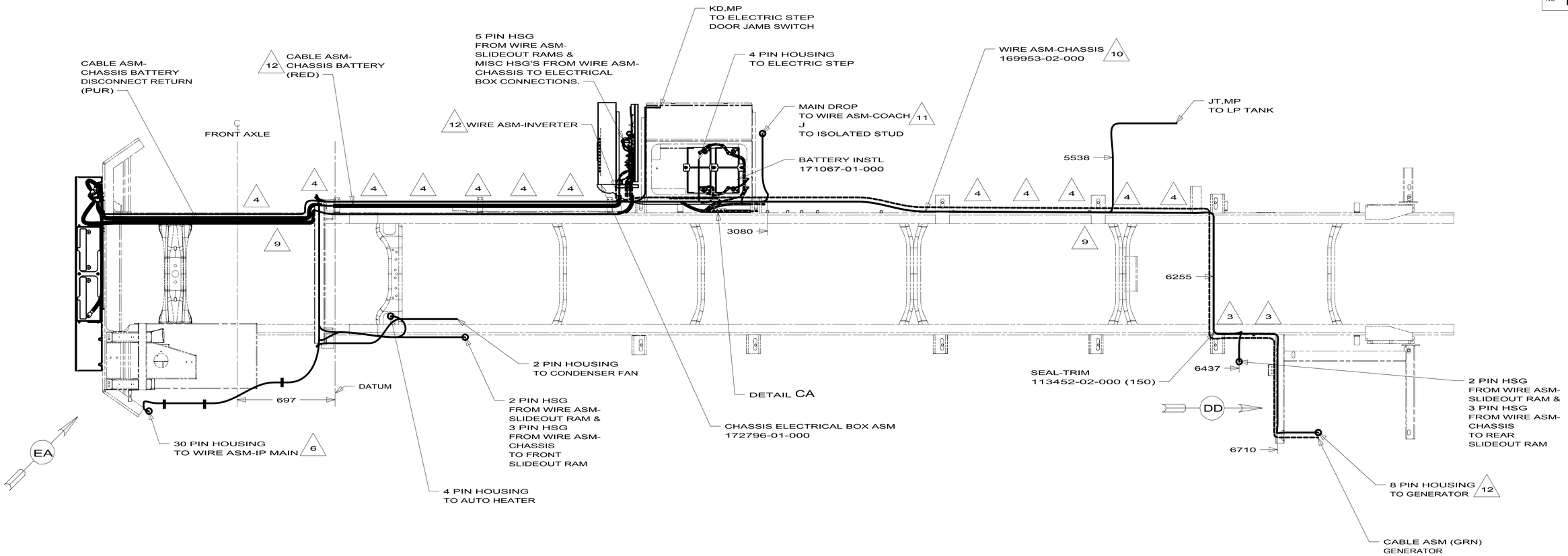

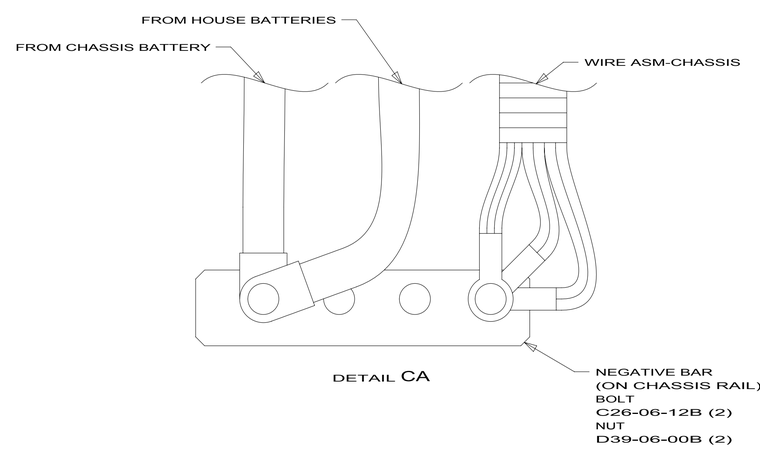

DETAIL CA

12 SEE BATTERY INSTL FOR ADDITIONAL INFORMATION.

11 SEE INSTL-BODY,12V FOR ADDITIONAL INFORMATION.

10 COIL UP EXTRA WIRE AND TIE BACK TO LOOM.

9 SECURE SO WIRES DO NOT CONTACT EXHAUST.

8 ROUTE WIRES & CABLE OVER SPRING HANGER AT THIS POINT.

7 SUPPLIED WITH CHASSIS.

6 SEE WIRING INSTL-FRONT END FOR ADDITIONAL INFORMATION.

5 ROUTE WIRES & CABLE INSIDE CHASSIS RAIL AT THIS POINT AND TO THE REAR.

4 CLAMP 83610-03-000, SCREW G39-08-12B.

3 CLAMP 83610-01-000, SCREW G39-08-12B.

2. SECURE CONDUIT 41953-09, -10, -11, -13, AND -14
OVER ALL WIRES IN CONTACT WITH SHARP EDGES.

1. LEGEND: WINNEBAGO: CABLE: CHASSIS SUPPLIED WIRING.

NOTES:

1LI FRTL(FRED)22K-300HP 22.5TIRE

265 CODES/STANDARDS-CSA/CMVSS

1B1 CODES/STANDARDS USA

1B1 265 1PV

FOR ELECTRICAL TORQUE SPECIFICATIONS SEE DWG NO. 128783-01-000

X-X FOR ELECTRICAL CALLOUTS SEE DWG NO. 121339-01-000

FIRST USED 10 J&K32H

DO NOT SCALE DRAWING

TITLE: WIRING INSTL-CHASSIS

SHEET 3 PART NO 169930 REV

10/7/2009

DWG NO 169930

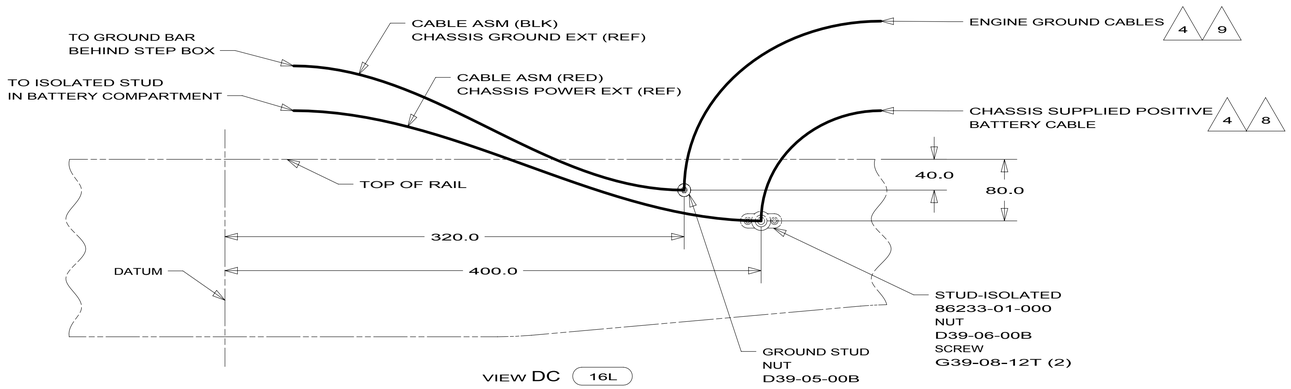

VIEW DC 16L

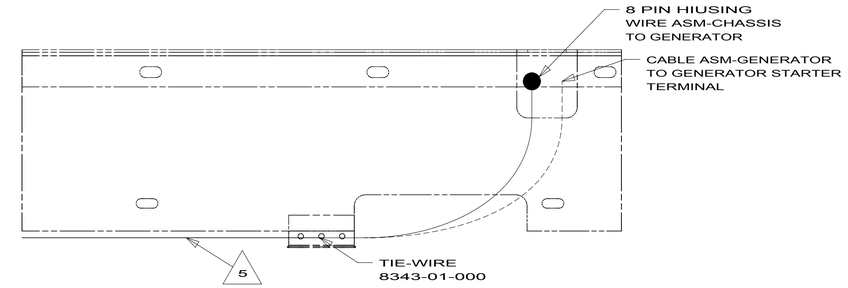

VIEW DD

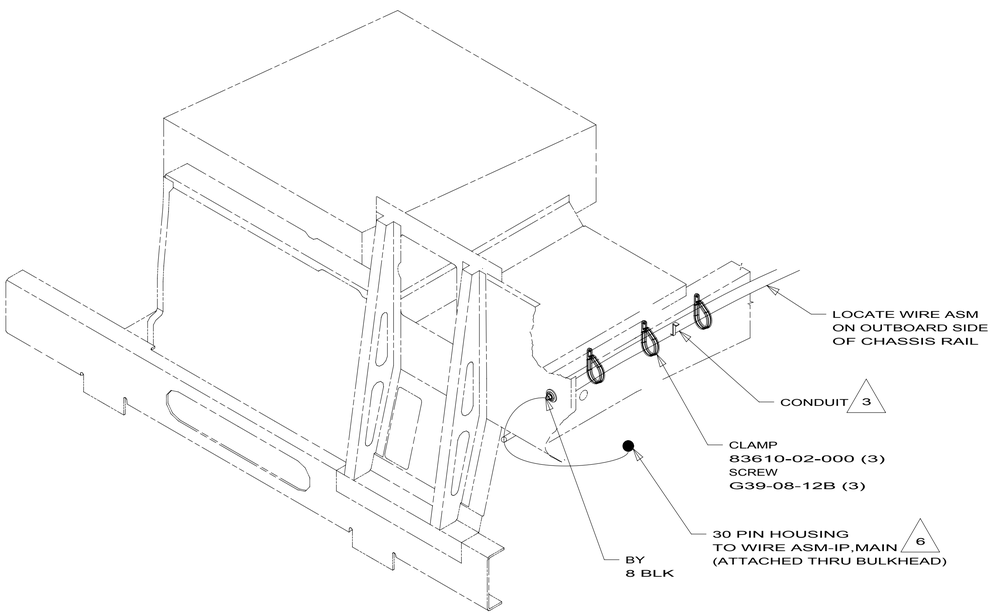

VIEW DA 16L

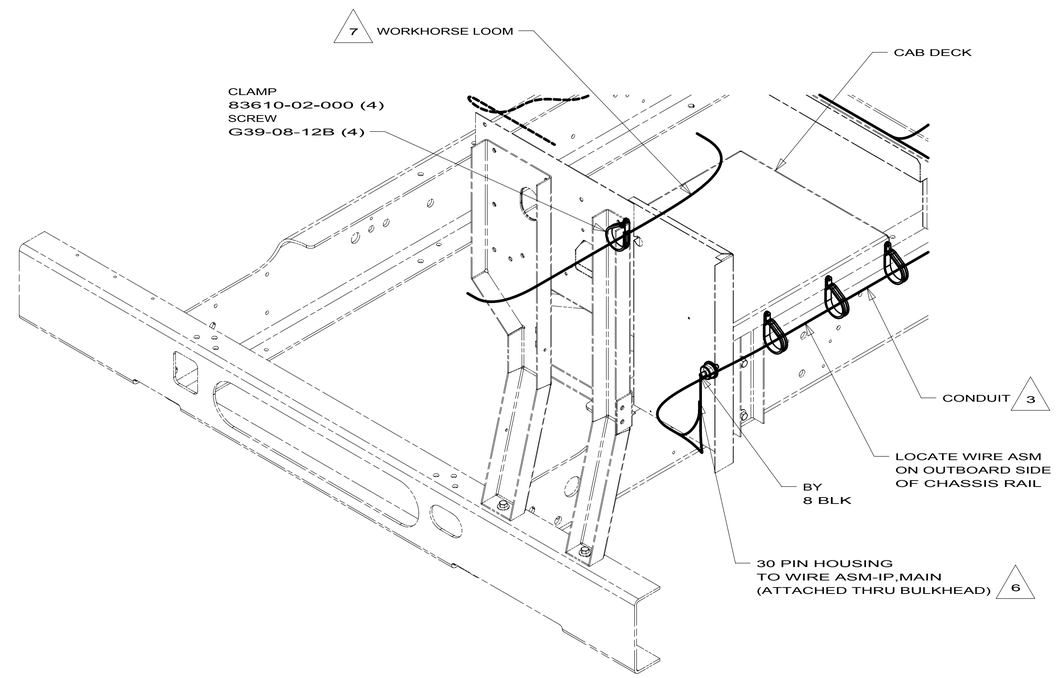

VIEW DB 1PV

7 CLAMP WORKHORSE ENGINE HARNESS TO CAB DECK TO PROTECT HARNESS FROM DAMAGE.

6 SEE WIRING INSTL-FRONT END FOR ADDITIONAL INFORMATION.

5 SECURE SO WIRES DO NOT CONTACT EXHAUST.

4 SUPPLIED WITH CHASSIS.

3 COVER WITH CONDUIT 41953-10-000 AND 41953-11-000 AS REQUIRED.

2. SECURE CONDUIT 41953-09, -10, -11, -13, AND -14 OVER ALL WIRES IN CONTACT WITH SHARP EDGES.

1. LEGEND: ——— WINNEBAGO: - - - - - - - - CABLE: — — — CHASSIS SUPPLIED WIRING.

NOTES:

9 CUT CHASSIS SUPPLIED BATTERY CABLE700MM FROM BATTERY TERMINAL AND ADD TERMINAL 8348-01-000 TO CUT END

8 CUT CHASSIS SUPPLIED POSITIVE BATTERY CABLE 150MM FROM BATTERY TERMINAL END, DISCARD TERMINAL END AND ADD TERMINAL 113738-01-000 TO CUT END. COIL EXCESS ALONG FRAME RAIL JUST BEHIND THE RADIATOR AND TIE UP WITH WIRE-TIE 8343-04-000

FOR ELECTRICAL TORQUE SPECIFICATIONS SEE DWG NO. 128783-01-000

X-X FOR ELECTRICAL CALLOUTS SEE DWG NO. 121339-01-000

1PV WORKHORSE 24,000#-22.5 TIRE

16L FORD 22,000#-22.5 AL WHL

265 CODES/STANDARDS-CSA/CMVSS

1B1 CODES/STANDARDS USA

1B1 265

FIRST USED 10 J&K32H

DO NOT SCALE DRAWING

TITLE: WIRING INSTL-CHASSIS

SHEET 4 | PART NO 169930 | REV

10/7/2009

DWG NO 169930

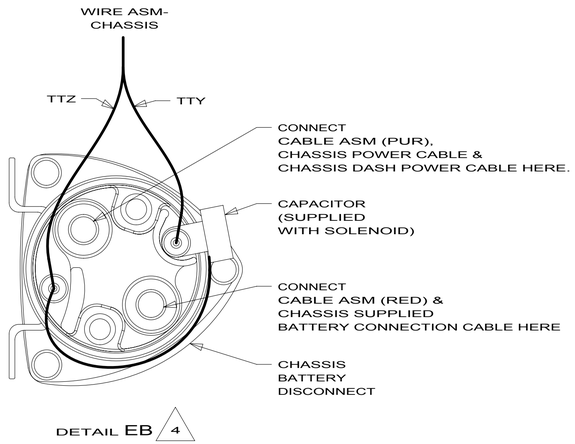

DETAIL EB 4

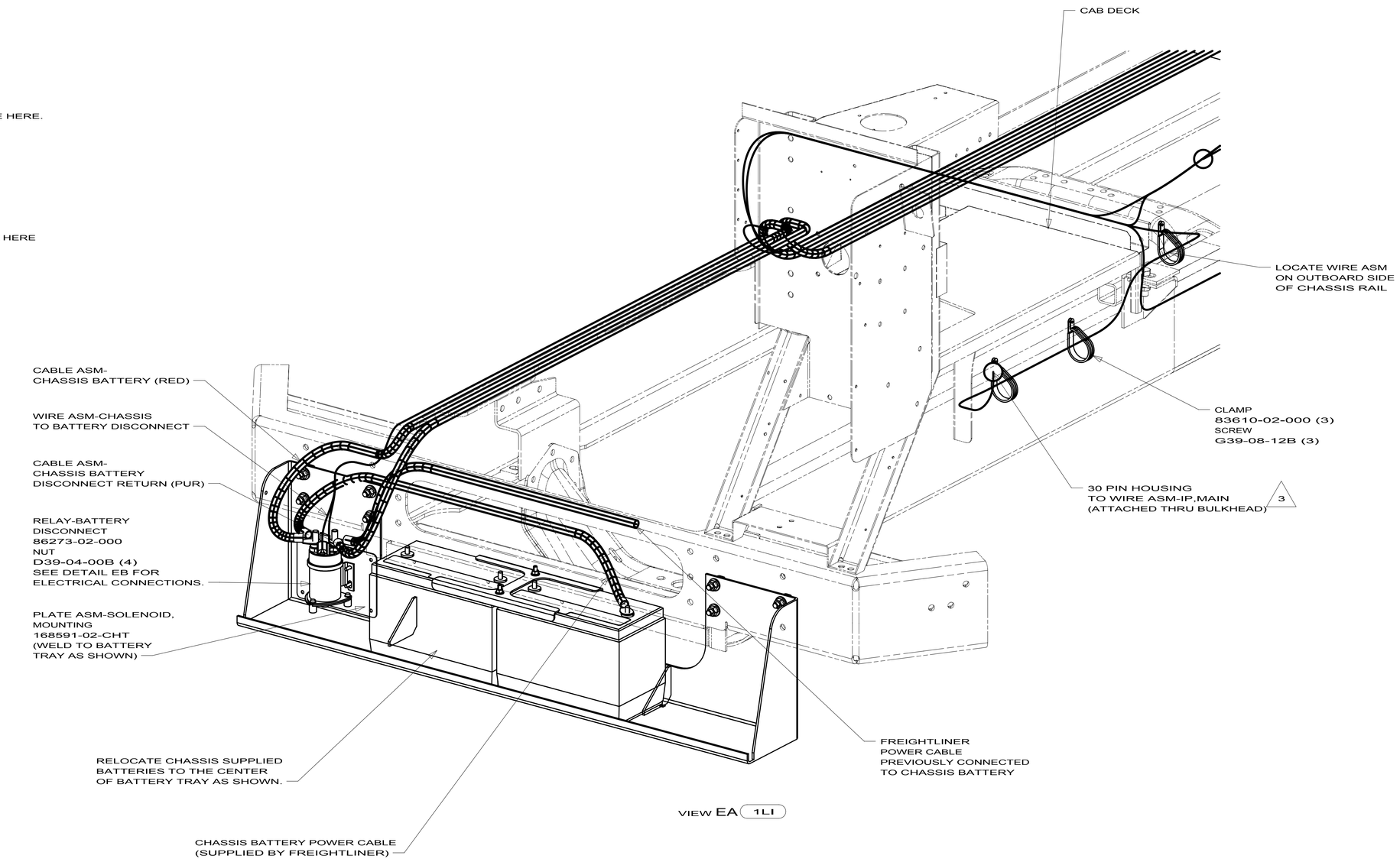

VIEW EA 1LI

1LI FRTL(FRED)22K-300HP 22.5TIRE

265 CODES/STANDARDS-CSA/CMVSS

1B1 CODES/STANDARDS USA

4 SEE BATTERY INSTL FOR ADDITIONAL INFORMATION.

3 SEE WIRING INSTL-FRONT END FOR ADDITIONAL INFORMATION.

2. SECURE CONDUIT 41953-09, -10, -11, -13, AND -14 OVER ALL WIRES IN CONTACT WITH SHARP EDGES.

1. LEGEND: ——— WINNEBAGO: - - - - - - - - CABLE: ——— CHASSIS SUPPLIED WIRING.

NOTES:

FOR ELECTRICAL TORQUE SPECIFICATIONS SEE DWG NO. 128783-01-000

X-X FOR ELECTRICAL CALLOUTS SEE DWG NO. 121339-01-000

1B1 265 1LI

FIRST USED 10 J&K32H

DO NOT SCALE DRAWING

TITLE: WIRING INSTL-CHASSIS

SHEET 5 PART NO 169930 REV

10/7/2009

DWG NO 169930

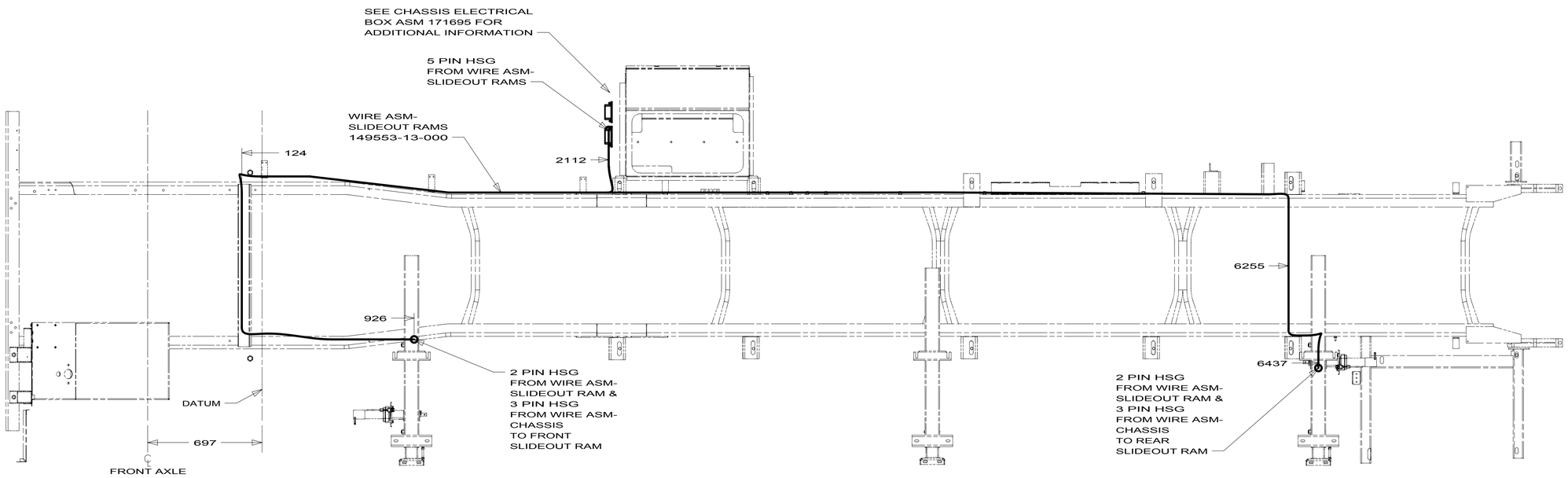

1LI	FRTL(FRED)22K-300HP 22.5TIRE
1PV	WORKHORSE 24,000#-22.5 TIRE
16L	FORD 22,000#-22.5 AL WHL
265	CODES/STANDARDS-CSA/CMVSS
1B1	CODES/STANDARDS USA

1B1 265 16L 1PV 1LI

NOTES:

3. WIRE ASM-SLIDEOUT IS ROUTED AND CLAMPED WITH WIRE ASM-CHASSIS.

2. SECURE CONDUIT 41953, TAB AS REQUIRED, OVER ALL WIRES IN CONTACT WITH SHARP EDGES.

1. LEGEND: ——— WINNEBAGO ---------- CABLE: ——— CHASSIS SUPPLIED WIRING.

FOR ELECTRICAL TORQUE SPECIFICATIONS SEE DWG NO. 128783-01-000

X-X FOR ELECTRICAL CALLOUTS SEE DWG NO. 121339-01-000

FIRST USED 10 J&K32H

DO NOT SCALE DRAWING

TITLE: WIRING INSTL-CHASSIS

SHEET 6 | PART NO 169930 | REV

10/7/2009

DRAWING NO.	FEATURES	SHEETS	
169929-01	1PS 1PV	1,2,4	
169929-02	16L 16Z	1,3,4	
169929-03	1PS 1PV	1,2,5	2
169929-04	16L 16Z	1,3,5	2

		J32H	J35Z	J37F	J38N	J35P	
CABLE ASM-CHASSIS GND EXT (BLK)	16Z 16L	133566-12-031	133566-12-019	133566-12-043	133566-12-047	133566-12-031	
CABLE ASM-CHASSIS POWER EXT (RED)	16Z 16L	141415-32-033	141415-32-020	141415-32-045	141415-32-049	141415-32-033	
CABLE ASM-CHASSIS BATTERY DISCONNECT SUPPLY (RED)	16Z 16L	141415-32-011	141415-32-010	141415-32-011	141415-32-010	141415-32-011	1
CABLE ASM-STARTER (RED)	1PS 1PV	141415-35-038	141415-35-026	141415-35-050	141415-35-054	141415-35-038	
CABLE ASM-COACH BATTERY (YEL)		141416-52-012	141416-52-008	141416-52-012	141416-52-008	141416-52-012	
CABLE ASM-COACH BATTERY GND (BLK)		133567-12-006	133567-12-006	133567-12-006	133567-12-006	133567-12-006	
CABLE ASM-CHASSIS BATTERY DISCONNECT RETURN (PUR)		141415-12-012	141415-12-006	141415-12-012	141415-12-006	141415-12-012	
CABLE ASM-GENERATOR (GRN)	321 52P	141415-42-065	141415-42-085	141415-42-075	141415-42-066	141415-42-075	
WIRE ASM-INVERTER	40D	154845-01-012	154845-01-020	154845-01-012	154845-01-018	154845-01-012	
LEVELING SYSTEM POWER CABLE (BLU)	60M	141415-22-049	141415-22-037	141415-22-061	141415-22-070	141415-22-049	
LEVELING SYSTEM GND CABLE (BLK)	60M	133566-11-008	133566-11-008	133566-11-008	N/A	133566-11-008	
CHASSIS SUPPLIED POSITIVE CABLE CHASSIS BATTERY DISCONNECT SUPPLY (RED)	1PS 1PV	1100	900	1100	900	1100	3

NOTES:

3. LOCATE CHASSIS SUPPLIED POSITIVE CABLE. REDUCE LENGTH TO DIMENSIONS IN COLUMN AND ADD TERMINAL 68070-01-000 TO THE CUT END 1800MM CHASSIS SUPPLIED LENGTH.

2. USED ON J32H, J35P, & J37F.

1. BATTERY CABLES MUST BE INSTALLED TO STARTER MOTOR BEFORE ENGINE WIRING HARNESS AND ROUTED IN SUCH A MANNER AS TO PREVENT ANY POSSIBLE DEGRADATION FROM THE EXHUAST SYSTEM.

FOR ELECTRICAL TORQUE SPECIFICATIONS SEE DWG NO. 128783-01-000

X-X FOR ELECTRICAL CALLOUTS SEE DWG NO. 121339-01-000

52P	GEN-5.5KW ONAN-GAS-MARQ GOLD
321	GENERATOR PREP KIT
60M	HYDRAULIC LEVEL JACKS-AUTO
40D	INVERTER-DC/AC,600 WATT
1PV	WORKHORSE 24,000#-22.5 TIRE
1PS	WORKHORSE 22,000#-22.5 TIRE
16Z	FORD 24,000#-22.5 ALUM WHEEL
16L	FORD 22,000#-22.5 AL WHL
265	CODES/STANDARDS-CSA/CMVSS
1B1	CODES/STANDARDS USA

1B1 265

RELEASE	REV A	DATE	DWG NO 169929

REV	ZONE	REVISION RECORD	DATE	DFTR-ORIG

COPYRIGHT 2009 WINNEBAGO INDUSTRIES, INC.

DFTR | ORIG. DATE
CHKR | ALL DIMENSIONS ARE IN MILLIMETERS
P.E.
M.E. | FIRST USED
DSNR | 10 J-SERIES

UNSPECIFIED TOLERANCES ARE:
WHOLE DIM (X) : 3
ONE-PLACE (X.X) : 1.5
TWO-PLACE (X.XX) : 0.50
ANGLE : 1°

MATERIAL:

THIRD ANGLE PROJECTION

DO NOT SCALE DRAWING

TITLE: BATTERY INSTL

SHEET 1 OF 5 | PART NO 169929 | REV

REF: 1

DWG NO 169929

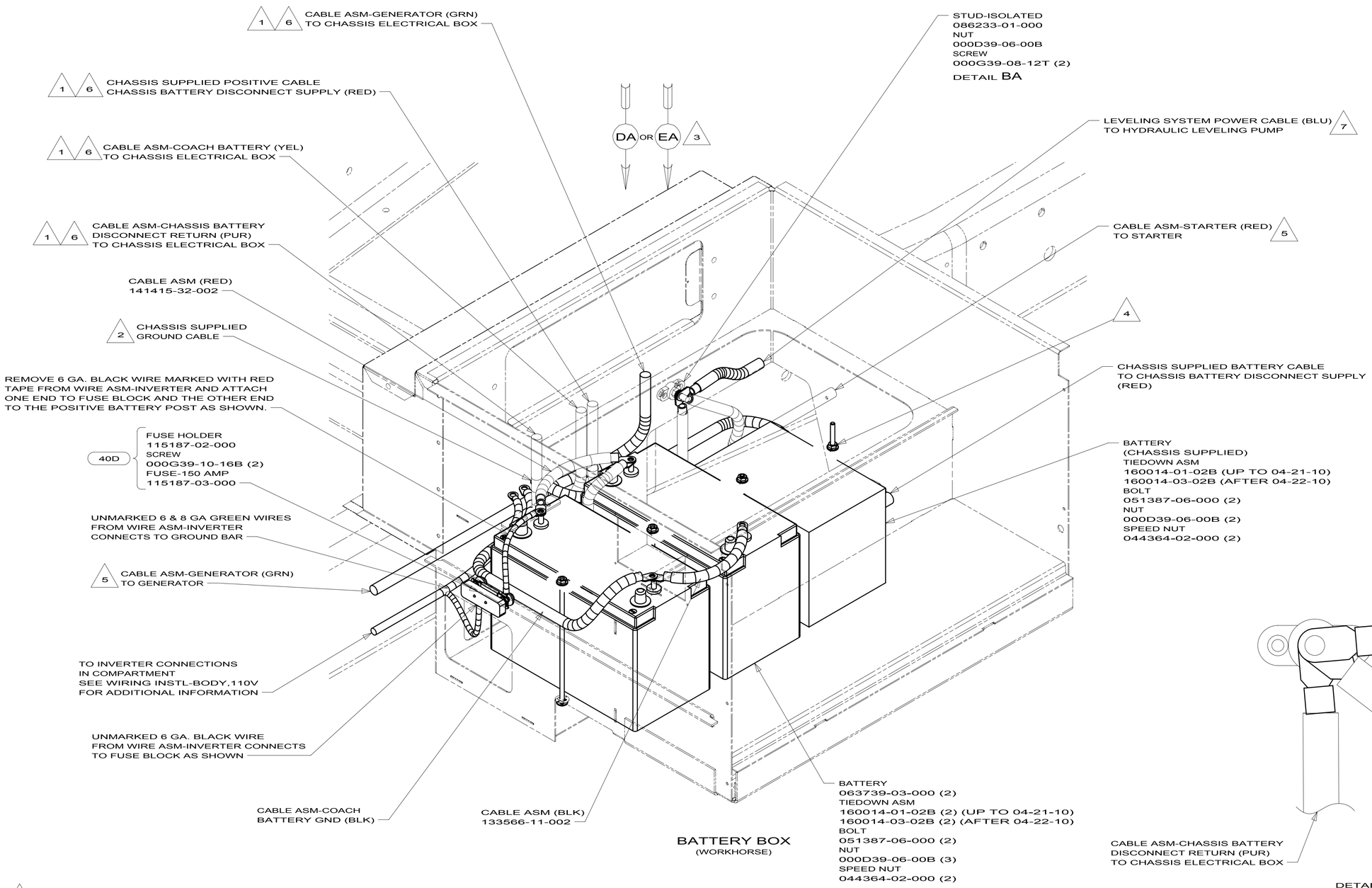

BATTERY BOX
(WORKHORSE)

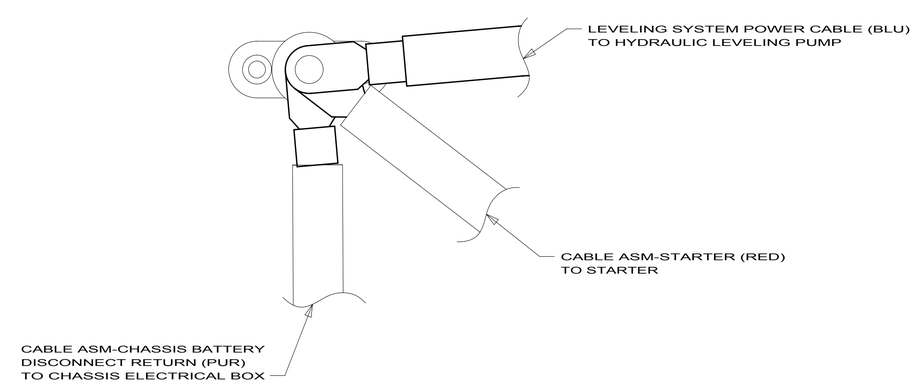

DETAIL BA

7 SEE LEVELING SYSTEM INSTL FOR ADDITIONAL INFORMATION.

6 SEE CHASSIS ELECTRICAL BOX ASM FOR ADDITIONAL INFORMATION.

5 SEE WIRING INSTL-CHASSIS FOR ADDITIONAL INFORMATION.

4 USE TWO NUTS HERE TO ACCOUNT FOR BATTERY HEIGHT DIFFERENCE.

3 USED ON J32H, J35P, & J37F.

2 LOCATE CHASSIS SUPPLIED CABLE REDUCE CABLE TO 700MM AND ADD TERMINAL 8348-01-000 TO THE CUT END.

1 CABLE WILL BE ROUTED TO THE RIGHT SIDE OF STEP BOX ON THE F32H. SEE SHT.5

NOTES:

40D INVERTER-DC/AC,600 WATT

265 CODES/STANDARDS-CSA/CMVSS

1B1 CODES/STANDARDS USA

1B1 265

FOR ELECTRICAL TORQUE SPECIFICATIONS SEE DWG NO. 128783-01-000

X-X FOR ELECTRICAL CALLOUTS SEE DWG NO. 121339-01-000

FIRST USED 10 J-SERIES

DO NOT SCALE DRAWING

TITLE: BATTERY INSTL

SHEET 2 | PART NO 169929 | REV

4/24/2010

DWG NO 169929

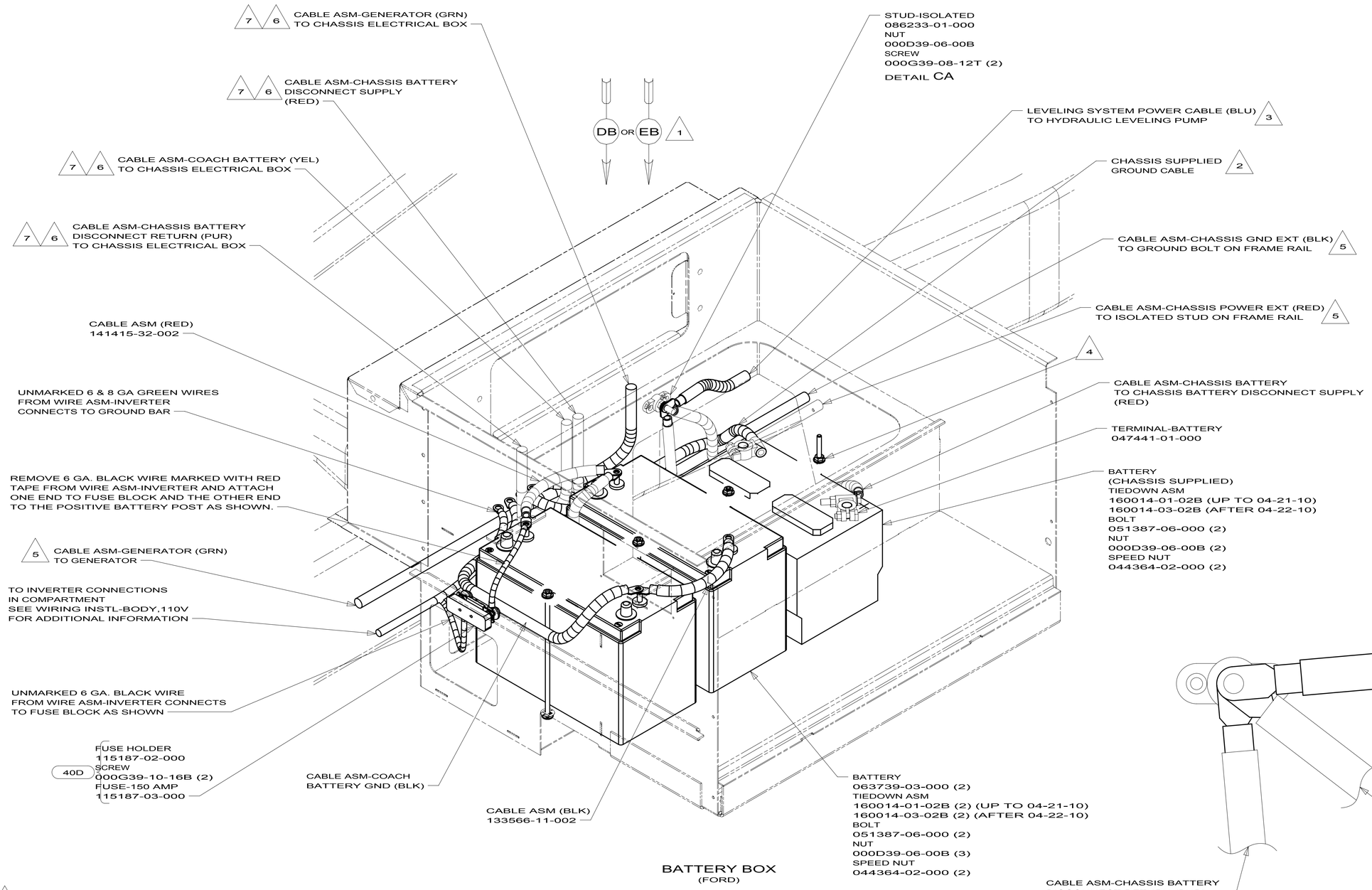

BATTERY BOX
(FORD)

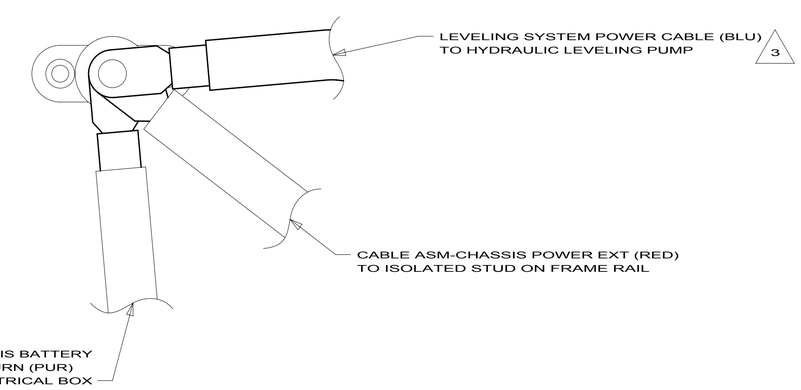

DETAIL CA

NOTES:

7. CABLE WILL BE ROUTED TO THE RIGHT SIDE OF STEP BOX ON THE F32H. SEE SHT.5
6. SEE CHASSIS ELECTRICAL BOX ASM FOR ADDITIONAL INFORMATION.
5. SEE WIRING INSTL-CHASSIS FOR ADDITIONAL INFORMATION.
4. USE TWO NUTS HERE TO ACCOUNT FOR BATTERY HEIGHT DIFFERENCE.
3. SEE LEVELING SYSTEM INSTL FOR ADDITIONAL INFORMATION.
2. LOCATE CHASSIS SUPPLIED GROUND WIRES TO CABLE, AND REDUCE LENGTH TO 700MM AND ADD TERMINAL 8348-01-000 TO THE CUT END.
1. USED ON J32H, J35P, & J37F.

40D INVERTER-DC/AC,600 WATT
265 CODES/STANDARDS-CSA/CMVSS
1B1 CODES/STANDARDS USA

1B1 265

FOR ELECTRICAL TORQUE SPECIFICATIONS SEE DWG NO. 128783-01-000

X-X FOR ELECTRICAL CALLOUTS SEE DWG NO. 121339-01-000

FIRST USED 10 J-SERIES

DO NOT SCALE DRAWING

TITLE: BATTERY INSTL

SHEET 3 | PART NO 169929 | REV

4/24/2010

DWG NO 169929

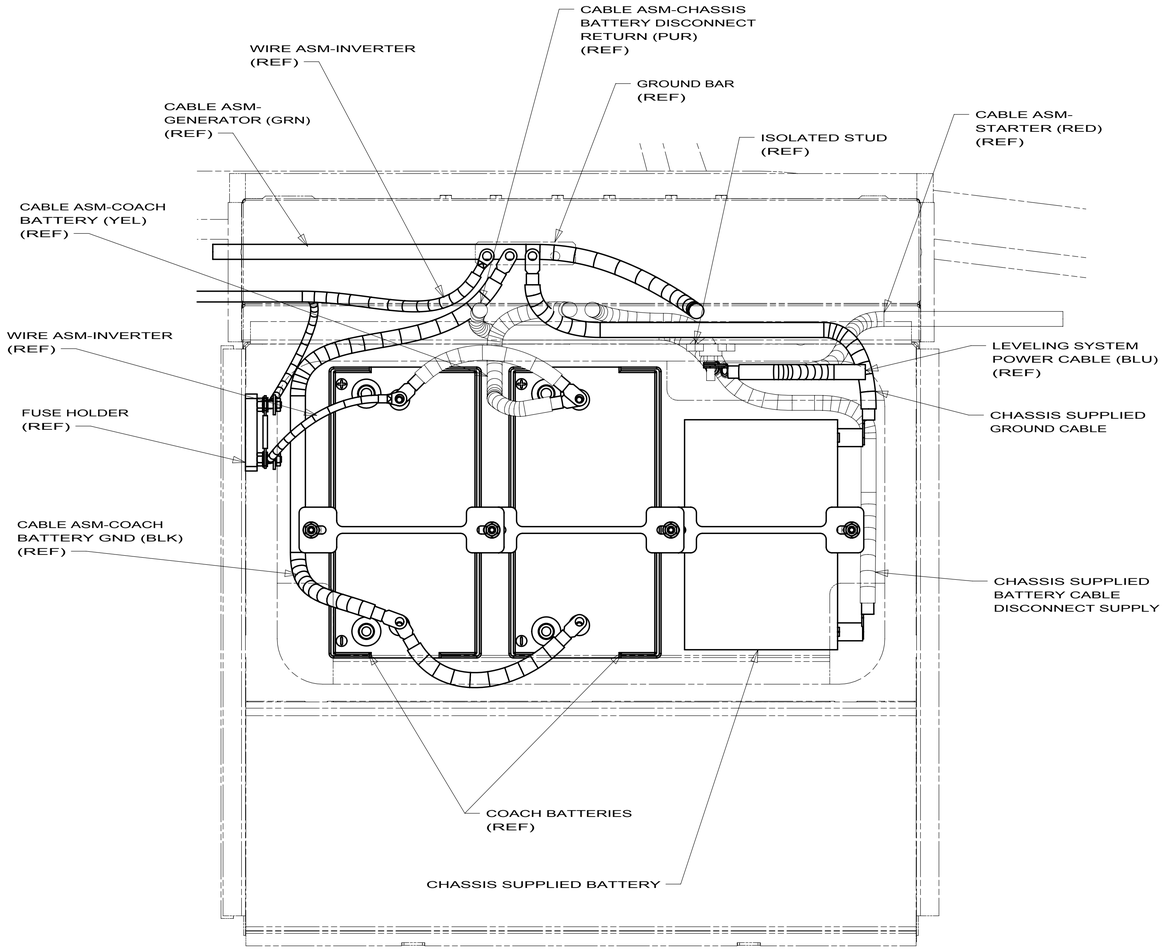

VIEW DA
(WORKHORSE)

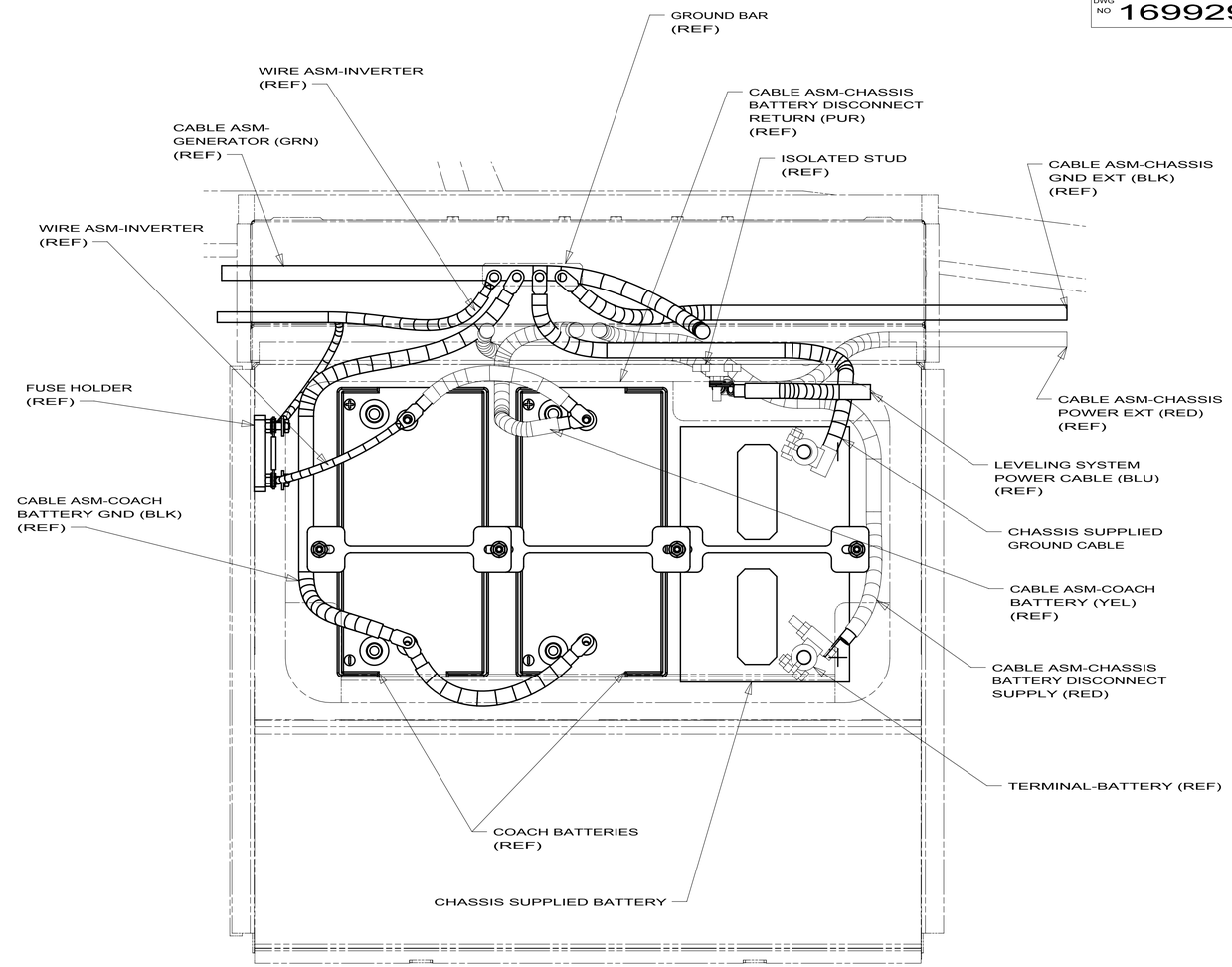

VIEW DB
(FORD)

265 CODES/STANDARDS-CSA/CMVSS

1B1 CODES/STANDARDS USA

1B1 265

FOR ELECTRICAL TORQUE SPECIFICATIONS SEE DWG NO. 128783-01-000

X-X FOR ELECTRICAL CALLOUTS SEE DWG NO. 121339-01-000

FIRST USED

10 J-SERIES

DO NOT SCALE DRAWING

TITLE:

BATTERY INSTL

SHEET 4

PART NO 169929

REV

DWG NO 169929

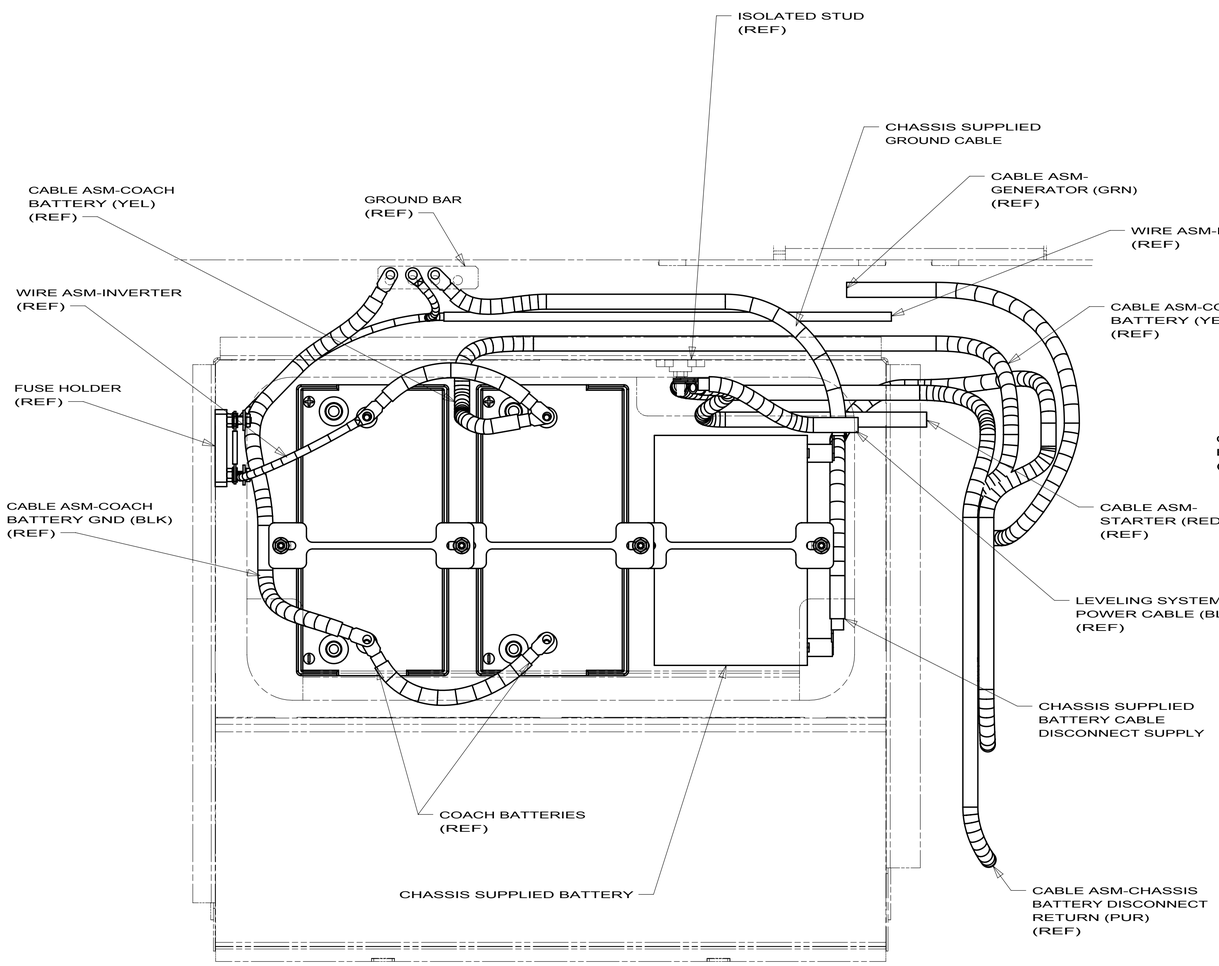

VIEW EA
(WORKHORSE)

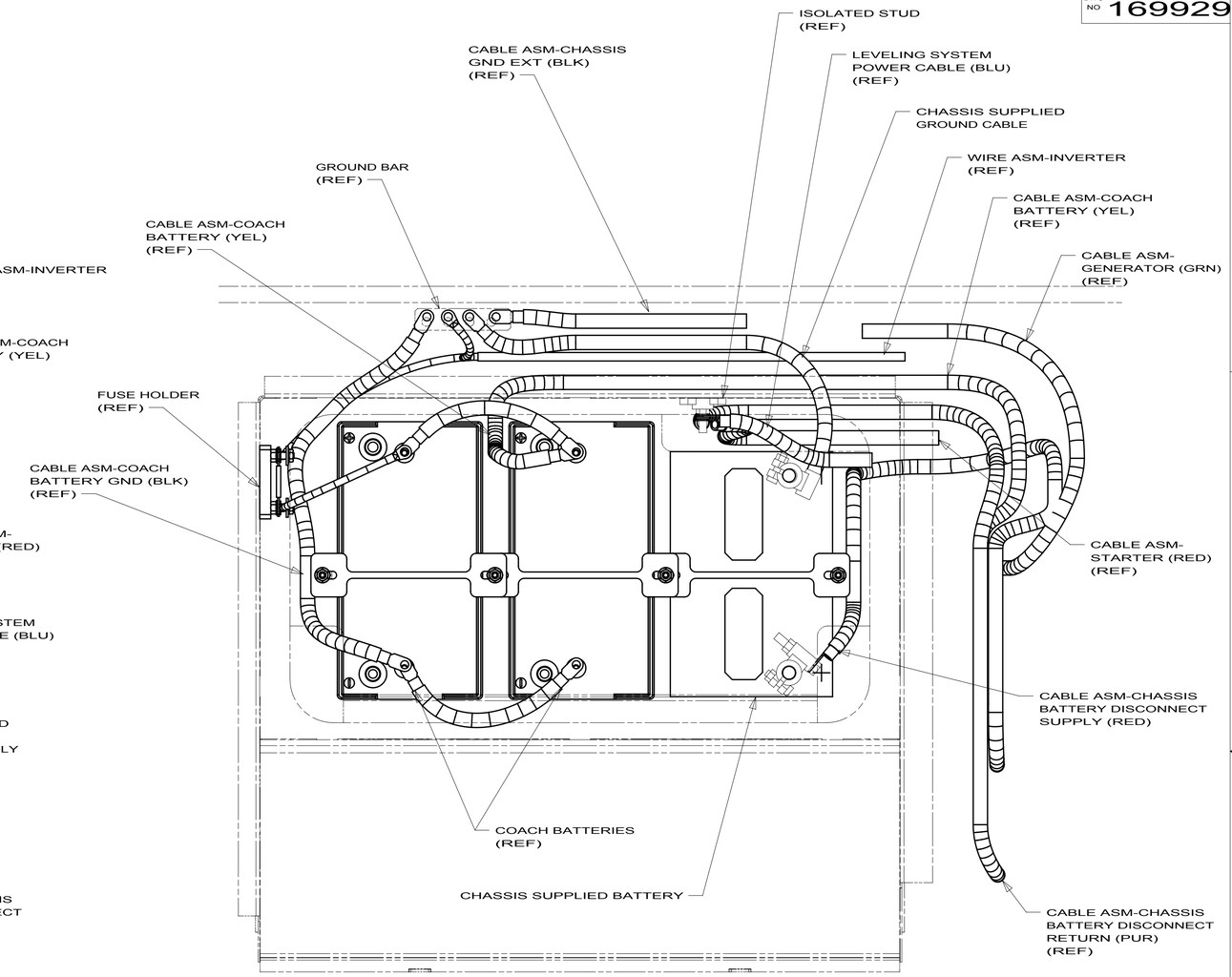

VIEW EB
(FORD)

265 CODES/STANDARDS-CSA/CMVSS

1B1 CODES/STANDARDS USA

1B1 265

FOR ELECTRICAL TORQUE SPECIFICATIONS SEE DWG NO. 128783-01-000

X-X FOR ELECTRICAL CALLOUTS SEE DWG NO. 121339-01-000

FIRST USED
10 J-SERIES

DO NOT SCALE DRAWING

TITLE:
BATTERY INSTL

SHEET 5

PART NO 169929

REV

RELEASE	REV A	DATE	DWG NO 171067

REV	ZONE	REVISION RECORD	DATE	DFTR-ORIG

		J32H	J35P	J35Z	J37F	J38N
CABLE ASM-CHASSIS BATTERY (RED)		141417-35-056	141417-35-056	141417-35-044	141417-35-068	141417-35-072
CABLE ASM-COACH BATTERY (YEL)		141417-52-012	141417-52-012	141417-52-008	141417-52-012	141417-52-008
CABLE ASM-COACH BATTERY GND (BLK)		133568-11-006	133568-11-006	133568-11-006	133568-11-006	133568-11-006
CABLE ASM-GENERATOR (GRN)	321 67A 51M	141415-42-070	141415-42-080	141416-42-091	141416-42-072	141416-42-072
WIRE ASM-INVERTER	40D	154845-01-012	154845-01-012	154845-01-020	154845-01-012	154845-01-018
LEVELING SYSTEM POWER CABLE (BLU)	60M	141415-22-049	141415-22-049	141415-22-037	141415-22-049	141415-27-035(UP TO 03-04-10) 141415-25-035(AFTER 03-05-10)
LEVELING SYSTEM GND CABLE (BLK)	60M	133566-11-008	133566-11-008	133566-11-008	133566-11-008	N/A
GENERATOR GROUND CABLE (BLK)	321 67A	N/A	133566-12-006	133566-12-006	133566-12-006	133566-12-006
FRONT CHASSIS POWER (RED)		141415-32-010	141415-32-010	141415-32-010	141415-32-010	141415-32-010
CHASSIS BATTERY DISCONNECT RETURN (PUR)		141417-15-056	141417-15-056	141417-15-044	141417-15-068	N/A

51M GEN-5.5KW ONAN-LP-MARQ GOLD
1LI FRTL(FRED)22K-300HP 22.5TIRE
40D INVERTER-DC/AC,600 WATT
60M HYDRAULIC LEVEL JACKS-AUTO
321 GENERATOR PREP KIT
1LL FRTL(FRED) 27,000#-22.5 TIRE
67A GEN-6.0KW ONAN QUIET DIESEL
265 CODES/STANDARDS-CSA/CMVSS
1B1 CODES/STANDARDS USA

1B1 265 1LL 1LI

FOR ELECTRICAL TORQUE SPECIFICATIONS SEE DWG NO. 128783-01-000

X-X FOR ELECTRICAL CALLOUTS SEE DWG NO. 121339-01-000

WINNEBAGO INDUSTRIES

COPYRIGHT 2010 WINNEBAGO INDUSTRIES, INC.

DFTR	ORIG. DATE
CHKR	ALL DIMENSIONS ARE IN MILLIMETERS
P.E.	
M.E.	FIRST USED
DSNR	10 J-FREIGHTLINER

UNSPECIFIED TOLERANCES ARE:
WHOLE DIM (X) : 3
ONE-PLACE (X.X) : 1.5
TWO-PLACE (X.XX) : 0.50
ANGLE : 1°

MATERIAL:

THIRD ANGLE PROJECTION

DO NOT SCALE DRAWING

TITLE: BATTERY INSTL,FL

SHEET 1 OF 3 | PART NO 171067 | REV

REF: 1

3/16/2010

DWG NO 171067

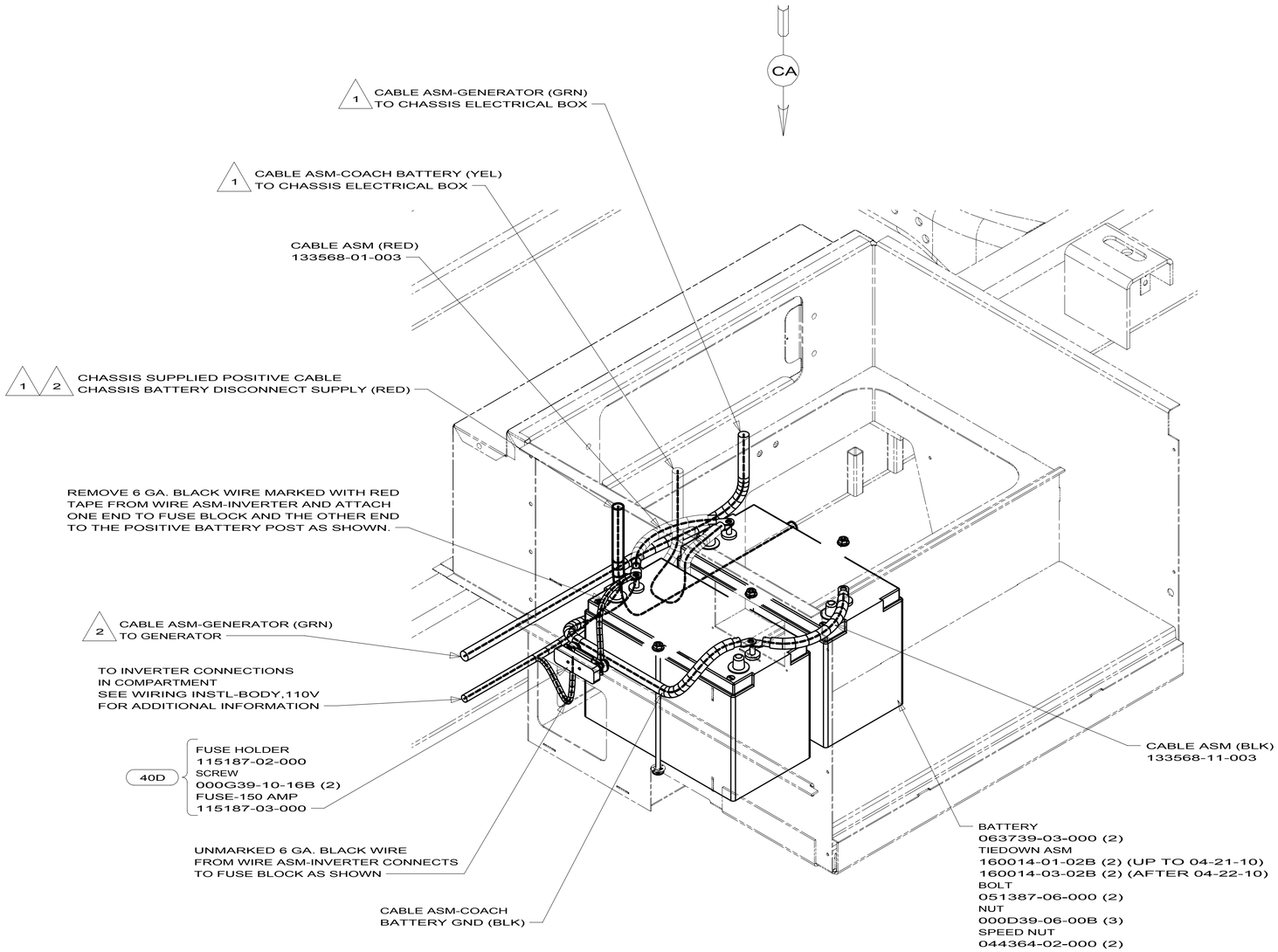

BATTERY BOX
(FREIGHTLINER)

40D INVERTER-DC/AC,600 WATT

265 CODES/STANDARDS-CSA/CMVSS

1B1 CODES/STANDARDS USA

1B1 265

2 SEE WIRING INSTL-CHASSIS FOR ADDITIONAL INFORMATION.

1 SEE CHASSIS ELECTRICAL BOX ASM FOR ADDITIONAL INFORMATION.

NOTES:

FOR ELECTRICAL TORQUE SPECIFICATIONS SEE DWG NO. 128783-01-000

X-X FOR ELECTRICAL CALLOUTS SEE DWG NO. 121339-01-000

FIRST USED
10 J-FREIGHTLINER

DO NOT SCALE DRAWING

TITLE:
BATTERY INSTL,FL

SHEET 2 PART NO 171067 REV

4/24/2010

DWG NO 171067

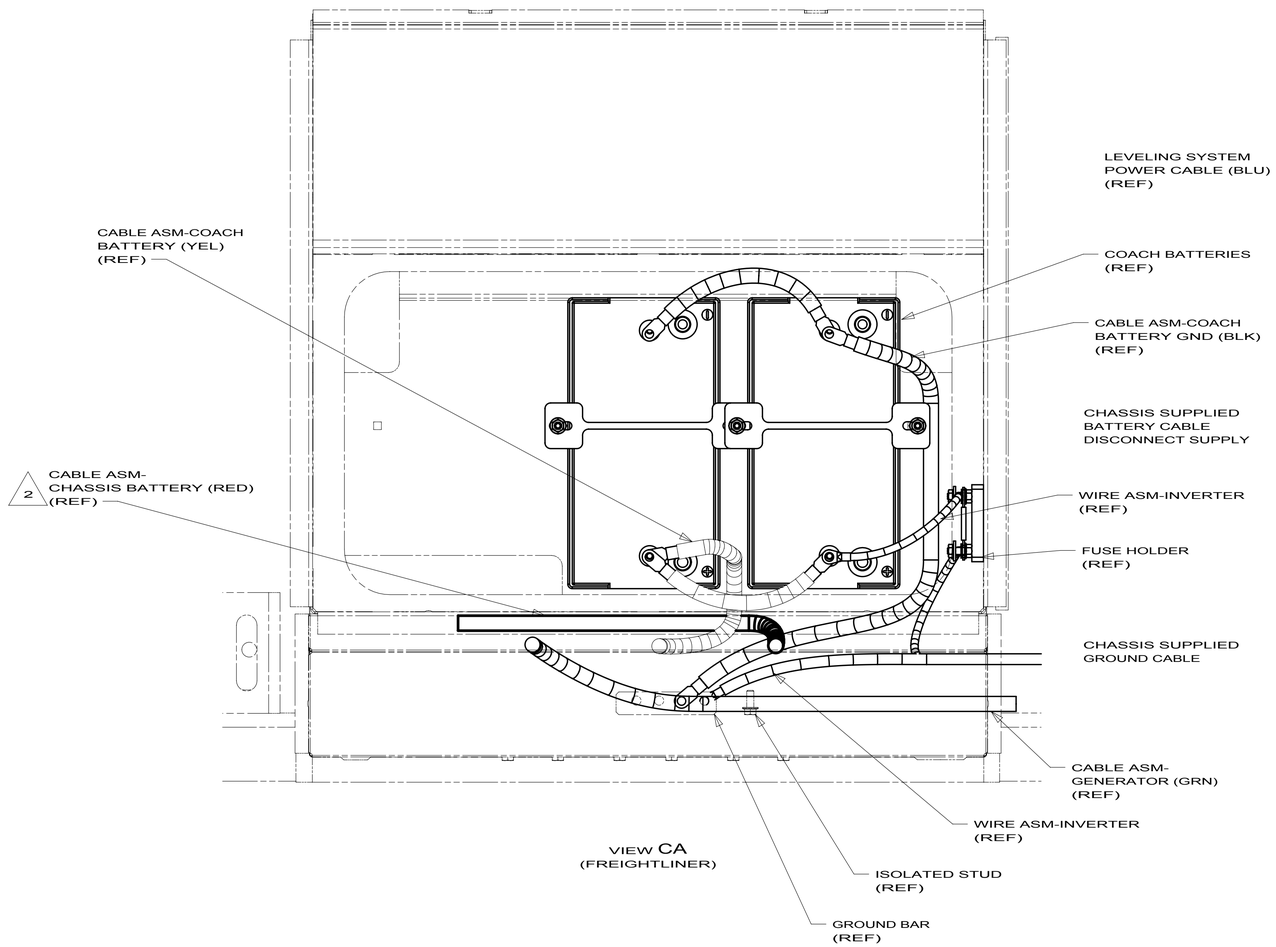

265 CODES/STANDARDS-CSA/CMVSS

1B1 CODES/STANDARDS USA

1B1 265

FIRST USED

10 J-FREIGHTLINER

DO NOT SCALE DRAWING

TITLE:

BATTERY INSTL,FL

SHEET 3 | PART NO 171067 | REV

FOR ELECTRICAL TORQUE SPECIFICATIONS SEE DWG NO. 128783-01-000

X-X FOR ELECTRICAL CALLOUTS SEE DWG NO. 121339-01-000

DRAWING NO.	SHEETS	UNITS
171695-01	1,2,3	J32H,K32H
171695-02	4,5,6	J37F,K35P

RELEASE	REV	DATE	DWG NO
	A		171695

REV	ZONE	REVISION RECORD	DATE	DFTR-ORIG

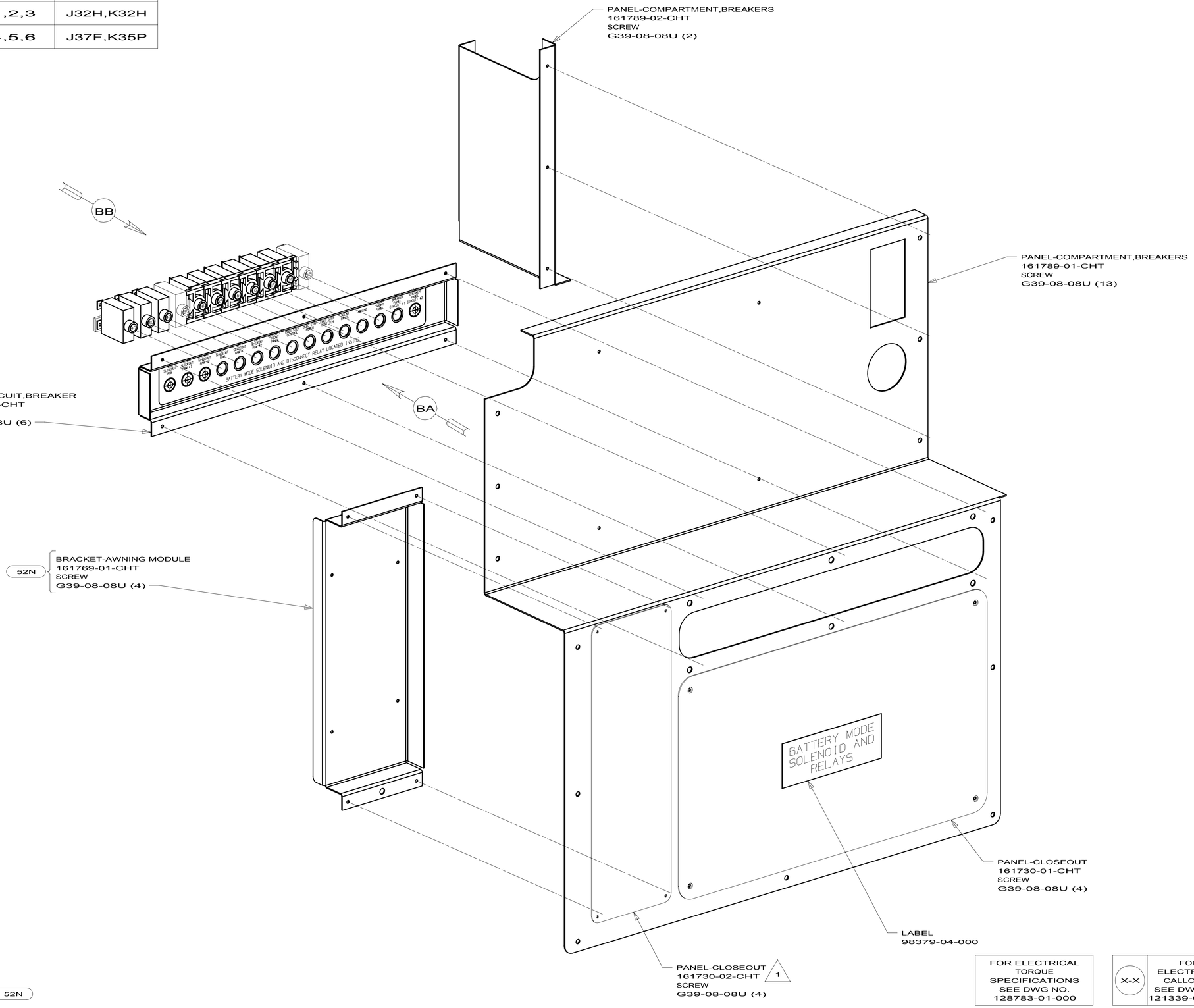

52N AWNING - PATIO, ELECTRIC

29Q SOLAR PANEL-10 WATT

265 CODES/STANDARDS-CSA/CMVSS

1B1 CODES/STANDARDS USA

1B1 265

1 NOT USED WITH 52N

NOTES:

FOR ELECTRICAL TORQUE SPECIFICATIONS SEE DWG NO. 128783-01-000

X-X FOR ELECTRICAL CALLOUTS SEE DWG NO. 121339-01-000

WINNEBAGO INDUSTRIES

COPYRIGHT 2009
WINNEBAGO
INDUSTRIES, INC.

DFTR	ORIG. DATE
CHKR	ALL DIMENSIONS ARE IN MILLIMETERS
P.E.	
M.E.	FIRST USED
DSNR	10 J&K-SERIES

UNSPECIFIED TOLERANCES ARE:

WHOLE DIM (X)	±	3
ONE-PLACE (X.X)	±	1.5
TWO-PLACE (X.XX)	±	0.50
ANGLE	±	1°

THIRD ANGLE PROJECTION

MATERIAL:

DO NOT SCALE DRAWING

TITLE: CHASSIS ELECTRICAL BOX ASM

SHEET 1 OF 6 | PART NO 171695 | REV

REF: 1

10/24/2009

DWG NO 171695

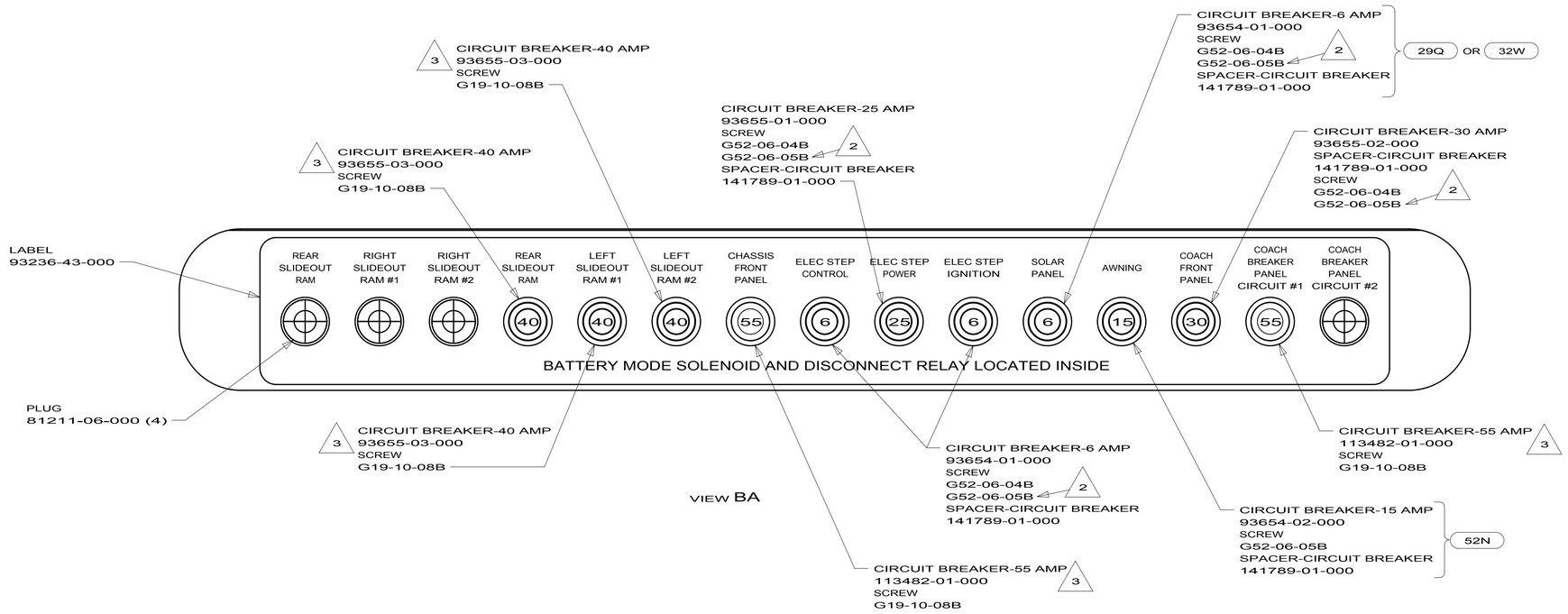

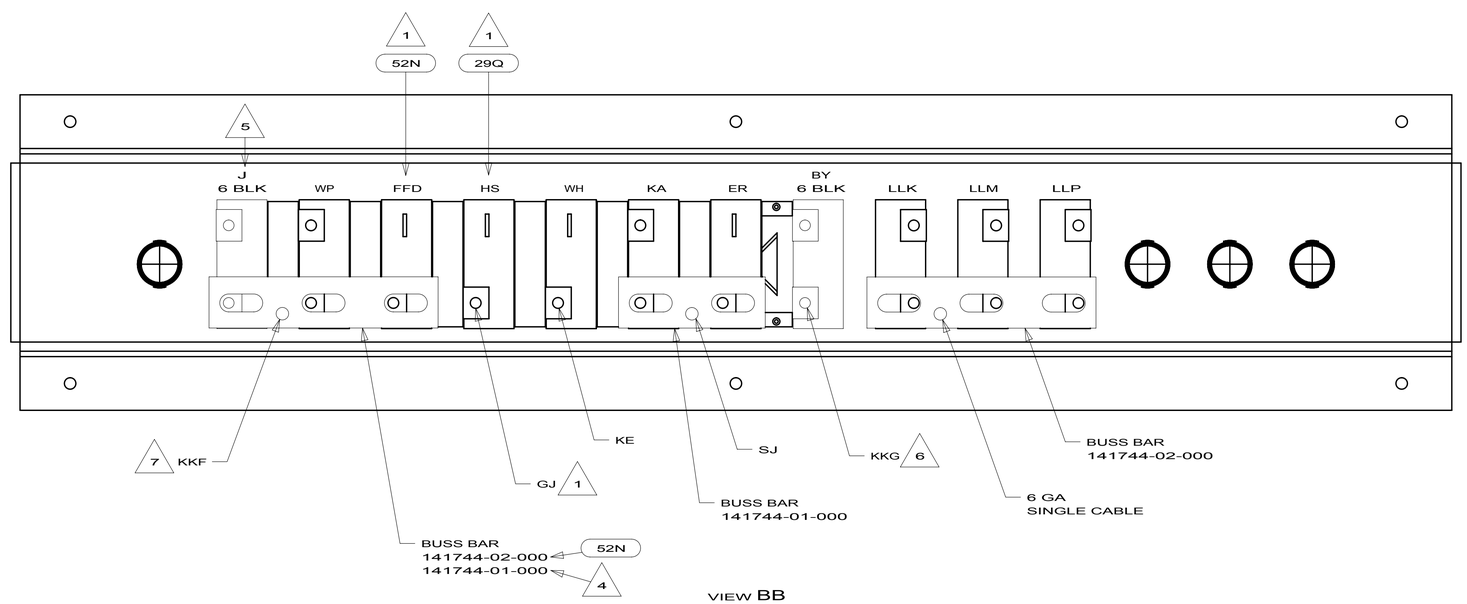

7 WIRE MARKED WITH 2 WRAPS OF YELLOW TAPE.

6 WIRE MARKED WITH PURPLE TAPE.

5 WIRE MARKED WITH YELLOW TAPE.

4 WITHOUT 52N

3 USE THE LONGER SCREW TO PROPERLY ATTACH BREAKER TO BUSS BAR.

2 REPLACE EXISTING SCREW TO PROPERLY ATTACH BREAKER TO BUSS BAR.

1 IF CIRCUIT NOT USED, TAPE BACK TO HARNESS.

NOTES:

32W GENERATOR START,AUTO-SYSTEM

52N AWNING - PATIO, ELECTRIC

29Q SOLAR PANEL-10 WATT

265 CODES/STANDARDS-CSA/CMVSS

1B1 CODES/STANDARDS USA

FOR ELECTRICAL TORQUE SPECIFICATIONS SEE DWG NO. 128783-01-000

X-X FOR ELECTRICAL CALLOUTS SEE DWG NO. 121339-01-000

1B1 265

FIRST USED

10 J&K-SERIES

DO NOT SCALE DRAWING

TITLE: CHASSIS ELECTRICAL BOX ASM

SHEET 2 | PART NO 171695 | REV

10/24/2009

DWG NO 171695

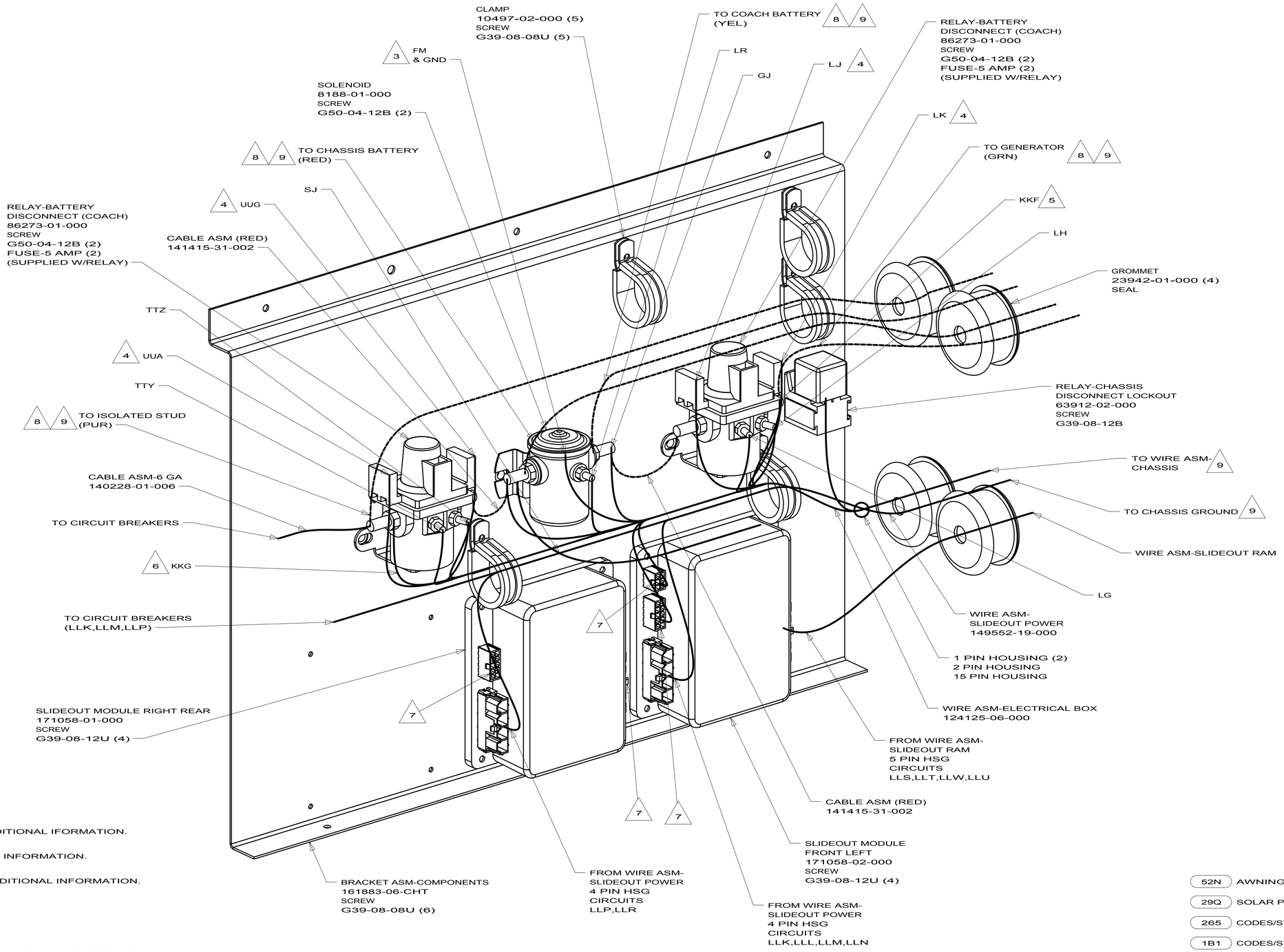

9 SEE WIRING INSTL-CHASSIS FOR ADDITIONAL IFORMATION.

8 SEE BATTERY INSTL FOR ADDITIONAL INFORMATION.

7 SEE WIRING INSTL-BODY,12V FOR ADDITIONAL INFORMATION.

6 WIRE MARKED WITH PURPLE TAPE.

5 WIRE MARKED WITH YELLOW TAPE.

4 INSERT CIRCUIT LJ, UUA, LK, OR UUG INTO UNDERSIDE OF FUSE HOLDER & INSTALL FUSE.

3 SECURE WITH SOLENOID MOUNTING SCREW.

2. SECURE CONDUIT 41953, TAB AS REQUIRED, OVER ALL WIRES IN CONTACT WITH SHARP EDGES.

1. LEGEND: WINNEBAGO: CABLE: CHASSIS SUPPLIED WIRING.

NOTES:

FOR ELECTRICAL TORQUE SPECIFICATIONS SEE DWG NO. 128783-01-000

X-X FOR ELECTRICAL CALLOUTS SEE DWG NO. 121339-01-000

52N AWNING - PATIO, ELECTRIC

29Q SOLAR PANEL-10 WATT

265 CODES/STANDARDS-CSA/CMVSS

1B1 CODES/STANDARDS USA

1B1 265

FIRST USED

10 J&K-SERIES

DO NOT SCALE DRAWING

TITLE: CHASSIS ELECTRICAL BOX ASM

SHEET 3 | PART NO 171695 | REV

10/24/2009

DRAWING NO.	SHEETS	UNITS
172796-01	1,2,3	J32H
172796-02	4,5,6	J35P,J37F

RELEASE	REV	DATE	DWG NO
	A		172796

REV	ZONE	REVISION RECORD	DATE	DFTR-ORIG

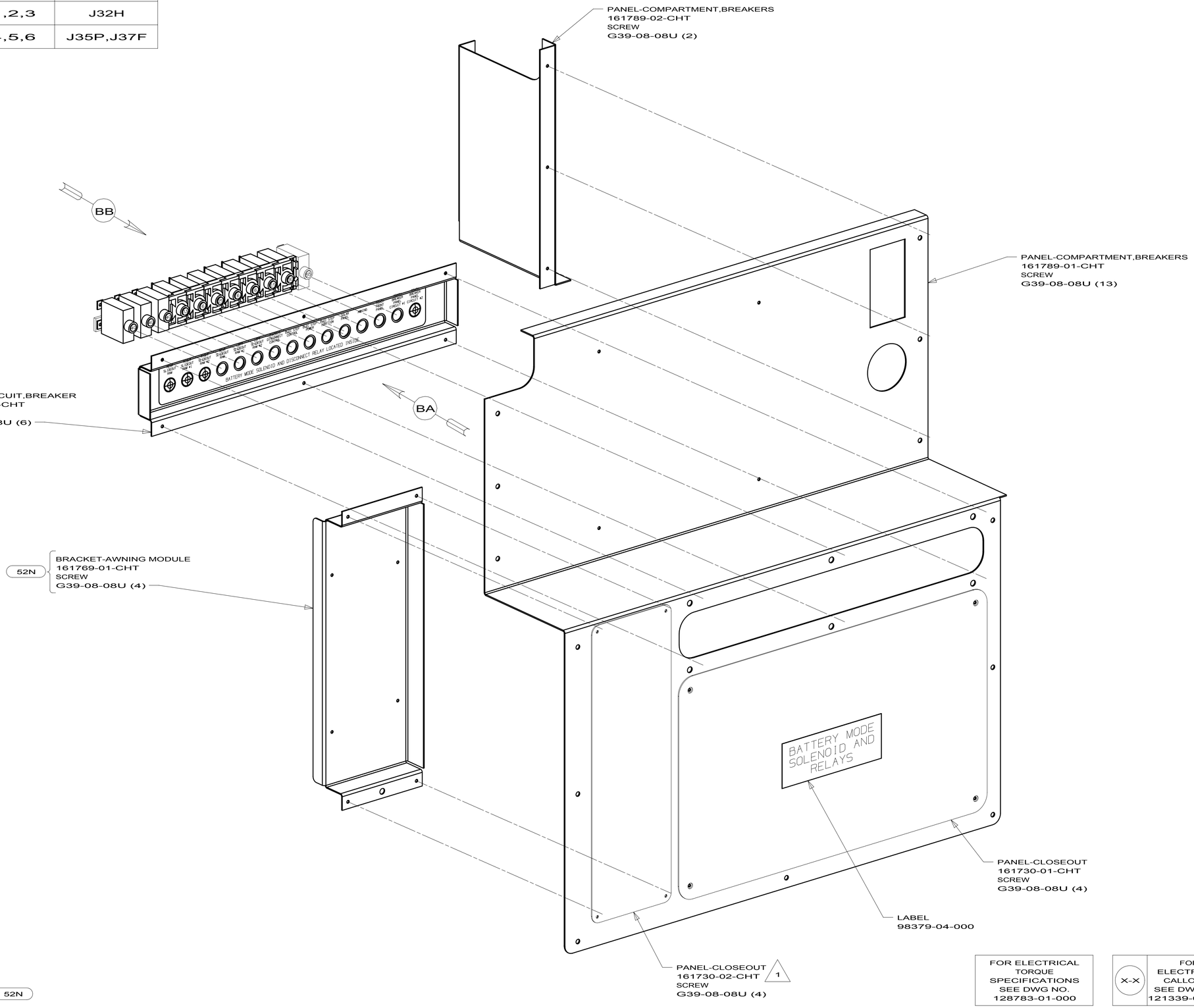

52N AWNING - PATIO, ELECTRIC

29Q SOLAR PANEL-10 WATT

265 CODES/STANDARDS-CSA/CMVSS

1B1 CODES/STANDARDS USA

1B1 265

1 NOT USED WITH 52N

NOTES:

FOR ELECTRICAL TORQUE SPECIFICATIONS SEE DWG NO. 128783-01-000

X-X FOR ELECTRICAL CALLOUTS SEE DWG NO. 121339-01-000

WINNEBAGO INDUSTRIES

COPYRIGHT 2009
WINNEBAGO
INDUSTRIES, INC.

DFTR	ORIG. DATE
CHKR	ALL DIMENSIONS ARE IN MILLIMETERS
P.E.	
M.E.	FIRST USED
DSNR	10 J-SERIES,FL

UNSPECIFIED TOLERANCES ARE:

WHOLE DIM (X)	:	3
ONE-PLACE (X.X)	:	1.5
TWO-PLACE (X.XX)	:	0.50
ANGLE	:	1°

THIRD ANGLE PROJECTION

MATERIAL:

DO NOT SCALE DRAWING

TITLE: CHASSIS ELECTRICAL BOX ASM

SHEET 1 OF 6 | PART NO 172796 | REV

REF: 1

DWG NO 172796

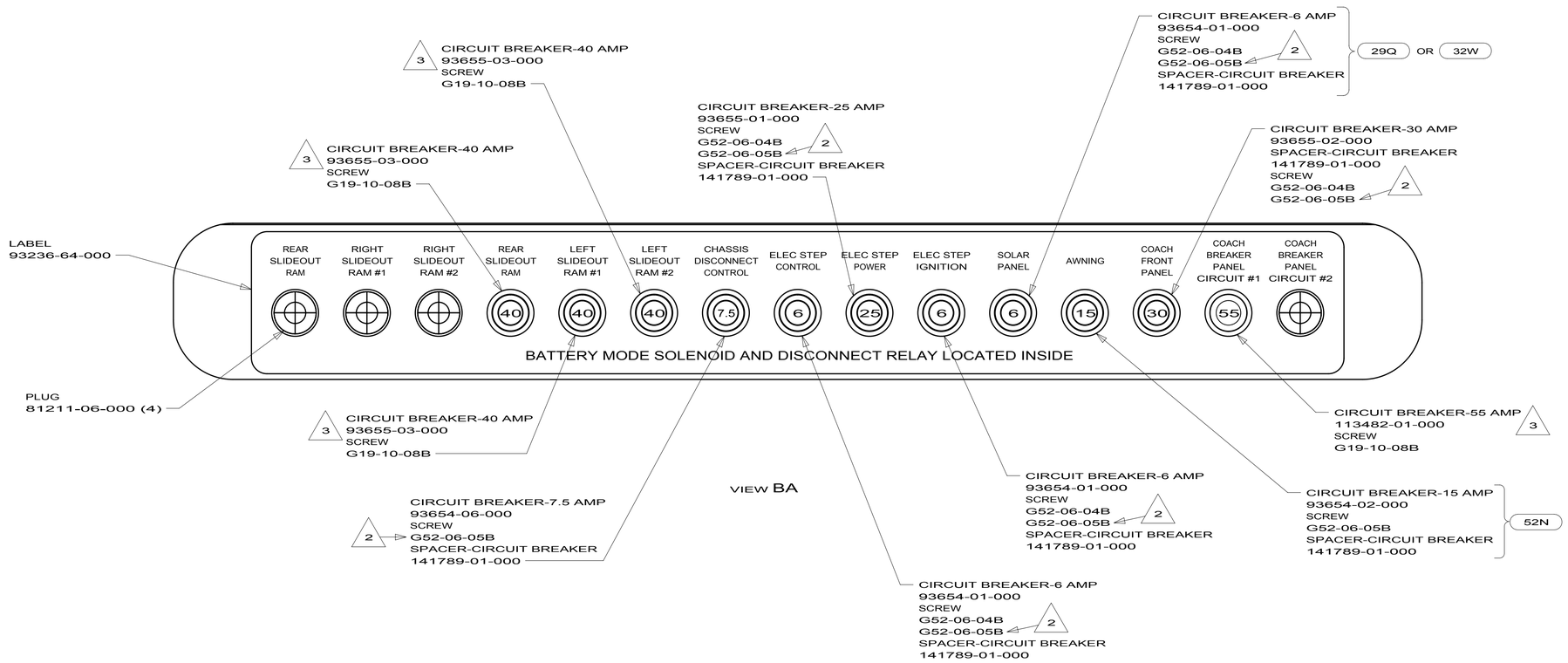

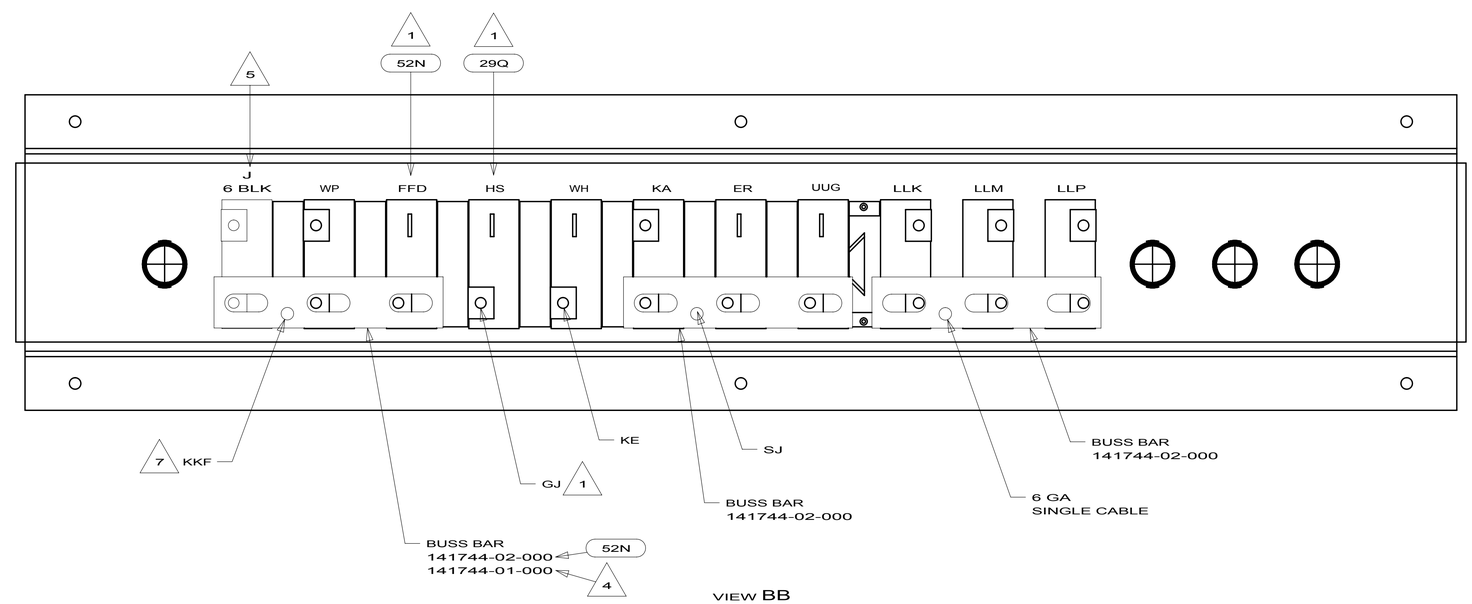

32W	GENERATOR-START,AUTO SYSTEM
52N	AWNING - PATIO, ELECTRIC
29Q	SOLAR PANEL-10 WATT
265	CODES/STANDARDS-CSA/CMVSS
1B1	CODES/STANDARDS USA

NOTES:

1. IF CIRCUIT NOT USED, TAPE BACK TO HARNESS.
2. REPLACE EXISTING SCREW TO PROPERLY ATTACH BREAKER TO BUSS BAR.
3. USE THE LONGER SCREW TO PROPERLY ATTACH BREAKER TO BUSS BAR.
4. WITHOUT 52N
5. WIRE MARKED WITH YELLOW TAPE.
6. WIRE MARKED WITH PURPLE TAPE.
7. WIRE MARKED WITH 2 WRAPS OF YELLOW TAPE.

FOR ELECTRICAL TORQUE SPECIFICATIONS SEE DWG NO. 128783-01-000

X-X FOR ELECTRICAL CALLOUTS SEE DWG NO. 121339-01-000

1B1 265

FIRST USED

10 J-SERIES,FL

DO NOT SCALE DRAWING

TITLE: CHASSIS ELECTRICAL BOX ASM

SHEET 2 | PART NO 172796 | REV

DWG NO 172796

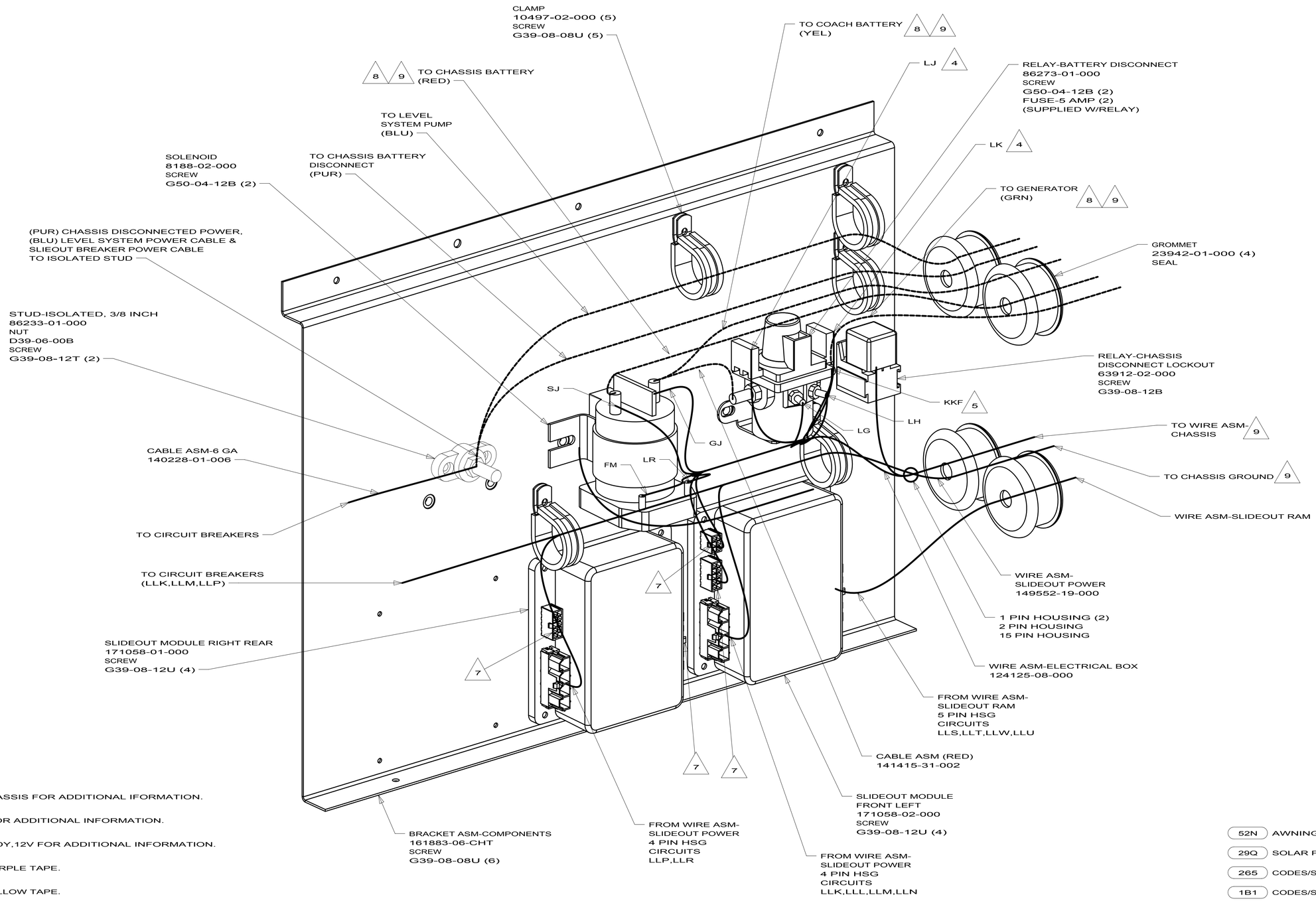

9 SEE WIRING INSTL-CHASSIS FOR ADDITIONAL IFORMATION.

8 SEE BATTERY INSTL FOR ADDITIONAL INFORMATION.

7 SEE WIRING INSTL-BODY,12V FOR ADDITIONAL INFORMATION.

6 WIRE MARKED WITH PURPLE TAPE.

5 WIRE MARKED WITH YELLOW TAPE.

4 INSERT CIRCUIT LJ & LK INTO UNDERSIDE OF FUSE HOLDER & INSTALL FUSE.

3 SECURE WITH SOLENOID MOUNTING SCREW.

2. SECURE CONDUIT 41953, TAB AS REQUIRED, OVER ALL WIRES IN CONTACT WITH SHARP EDGES.

1. LEGEND: ——— WINNEBAGO; - - - - - CABLE: ——— CHASSIS SUPPLIED WIRING.

NOTES:

FOR ELECTRICAL TORQUE SPECIFICATIONS SEE DWG NO. 128783-01-000

X-X FOR ELECTRICAL CALLOUTS SEE DWG NO. 121339-01-000

52N AWNING - PATIO, ELECTRIC

29Q SOLAR PANEL-10 WATT

265 CODES/STANDARDS-CSA/CMVSS

1B1 CODES/STANDARDS USA

1B1 265

FIRST USED
10 J-SERIES,FL

DO NOT SCALE DRAWING

TITLE:
CHASSIS ELECTRICAL BOX ASM

SHEET 3 | PART NO 172796 | REV

RELEASE	REV A	DATE	DWG NO 121339

REV	ZONE	REVISION RECORD	DATE	DFTR-ORIG

TERMINALS

NO.	PART NUMBER	DESCRIPTION
B-1	50003-01	TERMINAL-PIN, 16-14 GA,.156 DIA
B-2	50004-01	TERMINAL-RECP, 16-14 GA,.156 DIA
B-11	50003-02	TERMINAL-PIN, 16-14 GA,.180 DIA
B-12	50004-02	TERMINAL-RECP, 16-14 GA,.180 DIA
WP-1	106950-01	TERMINAL-PIN, 16-14 GA
WP-2	106950-02	TERMINAL-PIN, 10-12 GA
WP-3	106950-03	TERMINAL-PIN, 8 GA
R-1	35416-01	TERMINAL-RING, #10 STD, 8 GA
R-2	35416-02	TERMINAL-RING, #10 STD, 6 GA
R-3	35416-03	TERMINAL-RING, #10 STD, 10-12 GA
R-4	35416-04	TERMINAL-RING, #10 STD, 14-16 GA
R-5	37018-01	TERMINAL-RING, 5/16 STD, 12-10 GA
R-6	102777-01	TERMINAL-RING, #6 STD, 14-16 GA
R-7	102777-02	TERMINAL-RING, #6 STD, 10-12 GA
R-8	102777-03	TERMINAL-RING, #6 STD, 8 GA
R-9	33787-01	TERMINAL-RING, #10 STD, 14 GA
R-60	8325-01	TERMINAL-RING, 1/4 STD, 14-16 GA
R-61	8326-01	TERMINAL-RING, 3/8 STD, 14-16 GA
R-62	8327-01	TERMINAL-RING, #10 STD, 14-16 GA
R-63	8328-01	TERMINAL-RING, #10 STD, 10-12 GA
R-64	8328-02	TERMINAL-RING, 3/8 STD, 10-12 GA
R-65	8329-01	TERMINAL-RING, 3/8 STD, 8 GA
R-66	8331-01	TERMINAL-RING, 3/8 STD, 4 GA
R-67	8332-01	TERMINAL-RING, 1/4 STD, 6 GA
R-68	8332-02	TERMINAL-RING, 1/4 STD, 10 GA
R-69	8350-01	TERMINAL-RING, 3/8 STD, 6 GA
R-70	99275-02	TERMINAL-RING, 7/16 STD, 8 GA
R-71	101397-01	TERMINAL-RING, #10 STD, 14-16 GA
R-91	88791-01	TERMINAL-RING, 3/8, 90°, 1/0 GA
R-92	88791-02	TERMINAL-RING, 3/8, 90°, 2 GA
R-93	8348-01	TERMINAL-RING, 3/8 STD, 2 GA
R-94	99275-01	TERMINAL-RING, 7/16 STD, 1/0 GA
RF-51	7944-01	TERMINAL-SPADE, 12-10 GA, #8 STUD
RF-52	7945-01	TERMINAL-SPADE, 18-14 GA, #8 STUD
TR-1	47443-01	TERMINAL-RECP, 16-14 GA,.25, INS
TR-2	47443-02	TERMINAL-RECP, 12-10 GA,.25, INS
TR-3	47443-05	TERMINAL-RECP, 22-18 GA,.25, INS
TR-11	47443-03	TERMINAL-RECP, 16-14 GA,.19, INS
TR-12	47443-04	TERMINAL-RECP, 16-14 GA,.11, INS
TR-21	80015-01	TERMINAL-RECP, 22-18 GA,.250, 90 DEG FOR USE WITH TAB THICKNESS .032
TR-22	80015-02	TERMINAL-RECP, 16-14 GA,.187, 90 DEG FOR USE WITH TAB THICKNESS .032
TR-23	80015-03	TERMINAL-RECP, 16-14 GA,.250, 90 DEG FOR USE WITH TAB THICKNESS .032
TR-24	80015-04	TERMINAL-RECP, 16-14 GA,.187, 90 DEG FOR USE WITH TAB THICKNESS .020
TR-51	7940-01	TERMINAL-RECP, 16-12 GA,.25, UNINS
TR-52	23809-01	TERMINAL-RECP, 16-14 GA,.19, UNINS
TR-53	23809-02	TERMINAL-RECP, 18-20 GA,.25, UNINS
TR-54	49270-01	TERMINAL-RECP, 18-20 GA,.19, UNINS
TR-55	7940-02	TERMINAL-RECP, 10 GA, .25, UNINS
TT-1	85745-02	TERMINAL-TAB, 16-14 GA,.25, INS
TT-2	85745-03	TERMINAL-TAB, 10-12 GA,.25, INS
TT-11	85745-04	TERMINAL-TAB, 18-22 GA,.19, INS
TT-51	7942-01	TERMINAL-TAB, 16-14 GA,.25, UNINS
TT-52	7943-01	TERMINAL-TAB, 14-10 GA,.25, UNINS
MF6-1	129236-01	TERMINAL-FEM, M/P, 630, 10-12
MF6-2	129236-02	TERMINAL-FEM, M/P, 630, 14-16

SPLICES

NO.	PART NUMBER	DESCRIPTION
BS-1	31876-01	SPLICE-BUTT, 16-14 GA, BLUE
BS-2	31876-02	SPLICE-BUTT, 12-10 GA, YELLOW
BS-3	31876-03	SPLICE-BUTT, 22-18 GA, RED
BS-SB	100070-01	SPLICE-BUTT, 14-16 GA, SHRINK,BLUE
BS-RB	112823-01	SPLICE-BUTT, 14-22 GA, REDUCER
BS-RS	173854-01	SPLICE-BUTT, 14-22 GA, REDUCER, SHRINK
S-1	7946-01	SPLICE, 1-6 MM²
S-2	23808-01	SPLICE, 6-9 MM²
I-2	7956-02	SHRINK WRAP .375 DIA
I-5	7956-05	SHRINK WRAP .25 DIA
SH-1	58028-01	SPLICE-HAT
S-10	101173-01	SPLICE-BARREL, 26300 CMA

NO.	PART NUMBER	DESCRIPTION
SP-1	90986-02	PLUG ASM-ELECTRIC STEP
SP-2	142524-01-000	HOUSING-4 PIN
	098261-01-000	SOCKET-CONNECTOR
	098262-07-000	SEAL-CONNECTOR
	098261-02-000 (3)	SOCKET-CONNECTOR
	098262-01-000 (3)	SEAL-CONNECTOR
HR-1	63910-01	HOUSING-RELAY
MP-8	125323-02	HOUSING-PIN, 8 CAVITY
MP-10	125323-01	HOUSING-PIN, 10 CAVITY
MPP	125324-01	TERMINAL-MALE, M/P, 150
CAV-1	125325-01	SEAL-CAVITY, 150-SERIES M/P
CON-3	98262-03	SEAL-CONNECTOR
LS-8	125323-03	LOCK-SECONDARY 8 POSITION
LS-10	125323-04	LOCK-SECONDARY 10 POSITION
H-8	108355-01	HOUSING-SWITCH, 8 POSITION
H-12	108355-02	HOUSING-SWITCH, 12 POSITION

NO.	PART NUMBER	DESCRIPTION
GEN-1	125323-02-000	HOUSING-8 POSN, MALE ,150 SERIES
	125324-01-000 (4)	TERMINAL-MALE, M/P, 150
	098262-03-000 (4)	SEAL-CONNECTOR
	125325-01-000 (4)	SEAL-CAVITY, 150 SERIES M/P
	125323-03-000	LOCK-SECONDARY 8 POSITION
GEN-2	125323-01-000	HOUSING-10 POSN, MALE ,150 SERIES
	125324-01-000 (5)	TERMINAL-MALE, M/P, 150
	098262-03-000 (5)	SEAL-CONNECTOR
	125325-01-000 (5)	SEAL-CAVITY, 150 SERIES M/P
	125323-04-000	LOCK-SECONDARY 10 POSITION

HOUSINGS AND TERMINALS

NO.	PART NUMBER	DESCRIPTION
HS-2	88474-10	HOUSING-SOCKET, 2 CAVITY
HS-3	88474-09	HOUSING-SOCKET, 3 CAVITY
HS-4	88474-08	HOUSING-S0CKET, 4 CAVITY
HS-5	88474-07	HOUSING-SOCKET, 5 CAVITY
HS-6	88474-06	HOUSING-SOCKET, 6 CAVITY
HS-7	88474-05	HOUSING-SOCKET, 6 CAVITY-IN LINE
HS-9	88474-03	HOUSING-SOCKET, 9 CAVITY
HS-12	88474-01	HOUSING-SOCKET, 12 CAVITY
HS-15	88474-02	HOUSING-SOCKET, 15 CAVITY
HS-2-R	88474-12	HOUSING-SOCKET, 2 CAVITY-RED
HP-2	88473-10	HOUSING-PIN, 2 CAVITY
HP-3	88473-09	HOUSING-PIN, 3 CAVITY
HP-4	88473-08	HOUSING-PIN, 4 CAVITY
HP-5	88473-07	HOUSING-PIN, 5 CAVITY
HP-6	88473-06	HOUSING-PIN, 6 CAVITY
HP-7	88473-05	HOUSING-PIN, 6 CAVITY-IN LINE
HP-8	88473-04	HOUSING-PIN, 8 CAVITY-IN LINE
HP-9	88473-03	HOUSING-PIN, 9 CAVITY
HP-12	88473-01	HOUSING-PIN, 12 CAVITY
HP-15	88473-02	HOUSING-PIN, 15 CAVITY
HP-2-R	88473-15	HOUSING-PIN, 2 CAVITY-RED
HP-3-B	88473-12	HOUSING-PIN, 3 CAVITY-BLUE
HP-3-G	88473-13	HOUSING-PIN, 3 CAVITY-GREEN
HP-3-R	88473-14	HOUSING-PIN, 3 CAVITY-RED
TS-1	88476-01	SOCKET-CONNECTOR, 20-14 GA
TS-2	88476-02	SOCKET-CONNECTOR, 12-10 GA
TP-1	88475-01	PIN-CONNECTOR, 20-14 GA
TP-2	88475-02	PIN-CONNECTOR, 12-10 GA
HS2HA	137208-01	HOUSING-SOCKET, 2 CAVITY-HIGH AMP
HP2HA	137207-01	HOUSING-PIN, 2 CAVITY-HIGH AMP
TS-HA	137210-01	SOCKET-CONNECTOR, 10AWG HIGH AMP
TP-HA	137209-01	PIN-CONNECTOR, 10AWG HIGH AMP
H-HA	104100-01	HOUSING, 1 CAVITY 75 AMP
T-HA	104100-03	TERMINAL 10 AWG - 6 AWG 75 AMP

BALLOON CALLOUT LEGEND

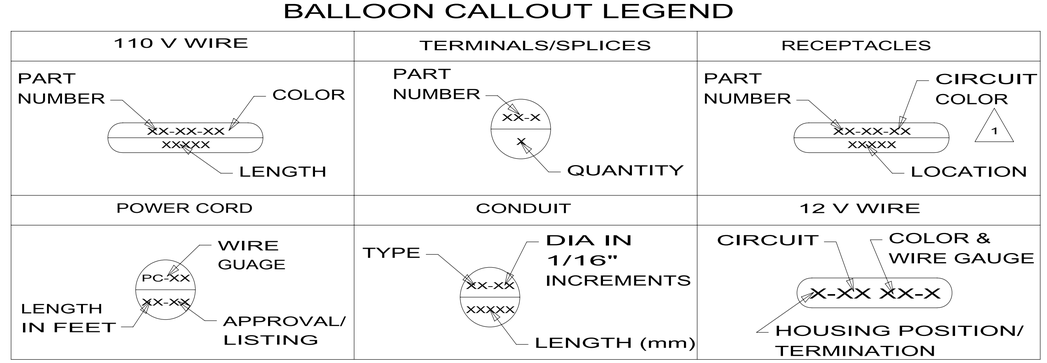

1 FOR RECP-BLANK, DET-X DENOTES DETAIL VIEW.

2 CONTACT WIRE PREP PRIOR TO USING FOR TOOLING PURPOSES.

NOTES:

COPYRIGHT 2010 WINNEBAGO INDUSTRIES, INC.

WINNEBAGO INDUSTRIES

DFTR	ORIG. DATE
CHKR	ALL DIMENSIONS ARE IN MILLIMETERS
P.E.	
M.E.	FIRST USED
DSNR	96 MH'S

UNSPECIFIED TOLERANCES ARE:
WHOLE DIM (X) :
ONE-PLACE (X.X) :
TWO-PLACE (X.XX) :
ANGLE :

MATERIAL:

THIRD ANGLE PROJECTION

DO NOT SCALE DRAWING

TITLE: PART LISTING-ELECTRICAL

SHEET 1 OF 7 | PART NO 121339 | REV

REF: 1

2/17/2010

DWG NO 121339

WIRE-SINGLE INS CONDUCTOR, STRANDED

NO.	PART NUMBER	DESCRIPTION
18-W 18-Y	156658-01 156658-02	WIRE, 18 GA. WHITE, PVC WIRE, 18 GA. YELLOW, PVC
16-Y 16-W	89360-01 89360-02	WIRE, 16 GA. YELLOW, PVC WIRE, 16 GA. WHITE, PVC
14-Y 14-W	48554-02 48554-04	WIRE, 14 GA. YELLOW, PVC WIRE, 14 GA. WHITE, PVC
12-Y 12-W	48555-02 48555-04	WIRE, 12 GA. YELLOW, PVC WIRE, 12 GA. WHITE, PVC
10-Y 10-W	8000-03 8000-05	WIRE, 10 GA. YELLOW, PVC WIRE, 10 GA. WHITE, PVC
8-B 8-G	8005-01 8005-03	WIRE, 8 GA. BLACK, PVC WIRE, 8 GA. GREEN, PVC
6-B 6-G	70065-01 70065-03	WIRE, 6 GA. BLACK, PVC WIRE, 6 GA. GREEN, PVC
18-WX 18-YX	121015-01 121015-02	WIRE, 18 GA. WHITE, XLPE WIRE, 18 GA. YELLOW, XLPE
16-YX 16-WX	116675-01 116675-02	WIRE, 16 GA. YELLOW, XLPE WIRE, 16 GA. WHITE, XLPE
14-YX 14-WX	98586-01 98586-02	WIRE, 14 GA. YELLOW, XLPE WIRE, 14 GA. WHITE, XLPE
12-YX 12-WX	98609-01 98609-02	WIRE, 12 GA. YELLOW, XLPE WIRE, 12 GA. WHITE, XLPE
10-YX 10-WX	116676-03 116676-04	WIRE, 10 GA. YELLOW, XLPE WIRE, 10 GA. WHITE, XLPE
8-BX 8-GX	116674-01 116674-02	WIRE, 8 GA. BLACK, XLPE WIRE, 8 GA. GREEN, XLPE
6-BX 6-GX	116687-01 116687-02	WIRE, 6 GA. BLACK, XLPE WIRE, 6 GA. GREEN, XLPE

WIRE-NM SHEATHED CABLE

NO.	PART NUMBER	DESCRIPTION
14 UL	8027-01-000	WIRE 14-2 ROMEX W/GROUND (UL)
14 CA	8023-02-000	WIRE 14-2 ROMEX W/GROUND (CAN)
12 UL	8026-01-000	WIRE 12-2 ROMEX W/GROUND (UL)
12 CA	8023-01-000	WIRE 12-2 ROMEX W/GROUND (CAN)
12-3 UL	8026-03-000	WIRE 12-3 ROMEX W/GROUND (UL)
12-3 CA	8023-03-000	WIRE 12-3 ROMEX W/GROUND (CAN)
10 UL	8022-01-000	WIRE 10-2 ROMEX W/GROUND (UL)
10 CA	24743-01-000	WIRE 10-2 ROMEX W/GROUND (CAN)
6-3 UL	108914-01-000	WIRE 6-3 ROMEX W/GROUND (UL)
6-3 CA	113136-01-000	WIRE 6-3 ROMEX W/GROUND (CAN)
6-2 UL	108914-02-000	WIRE 6-2 ROMEX W/GROUND (UL)
4-3 UL	128375-01-000	WIRE 4-3 ROMEX W/GROUND (UL)
4-3 CA	128375-01-000	WIRE 4-3 ROMEX W/GROUND (CAN)

CONDUIT

NO.	PART NUMBER	DESCRIPTION	TEMP.
C-4	41953-07-000	CONDUIT-CONVOLUTE,SLIT .25"ID	194° F
C-6	41953-06-000	CONDUIT-CONVOLUTE,SLIT .38"ID	194° F
C-8	41953-01-000	CONDUIT-CONVOLUTE,SLIT .50"ID	194° F
C-10	41953-02-000	CONDUIT-CONVOLUTE,SLIT .63"ID	194° F
C-16	41953-03-000	CONDUIT-CONVOLUTE,SLIT 1.0"ID	194° F
C-24	41953-08-000	CONDUIT-CONVOLUTE,SLIT 1.5"ID	194° F
C-32	41953-15-000	CONDUIT-CONVOLUTE,SLIT 2.0"ID	194° F
CX-8	41953-09-000	CONDUIT-CONVOLUTE,SLIT .50"ID	239° F
CX-12	41953-10-000	CONDUIT-CONVOLUTE,SLIT .75"ID	239° F
CX-16	41953-11-000	CONDUIT-CONVOLUTE,SLIT 1.0"ID	239° F
CX-20	41953-13-000	CONDUIT-CONVOLUTE,SLIT 1.25"ID	239° F
CX-24	41953-14-000	CONDUIT-CONVOLUTE,SLIT 1.50"ID	239° F
CX-32	41953-16-000	CONDUIT-CONVOLUTE,SLIT 2.0"ID	239° F
CN-10	41953-05-000	CONDUIT-CONVOLUTE,NOT SLIT .63"ID	194° F
CN-16	41953-12-000	CONDUIT-CONVOLUTE,NOT SLIT 1.0"ID	194° F

POWER CORDS

NO.	PART NUMBER	DESCRIPTION
PC-10/28	8054-01-000	POWER CORD 10 GA, 30 AMP, 28 FT. (UL/CA)
PC-10/35	8054-02-000	POWER CORD 10 GA, 30 AMP, 35 FT. (UL/CA)
PC-10/30-CA	8052-01-000	SUPERCEEDED BY 8054-01-000
PC-6/36	108934-01-000	POWER CORD 6 GA, 50 AMP, 36 FT. (UL/CA)
PC-6/36-FX	108934-02-000	POWER CORD 6 GA, 50 AMP, 36 FT. (UL/CSA) SUPERFLEX
PC-6/36-CA	113096-01-000	SUPERCEEDED BY 108934-02-000

BATTERY CABLE LEGEND

COLOR	DESCRIPTION
PURPLE	CHASSIS BATTERY TO SOLENOID
BLUE	HYDRAULIC JACKS PUMP
RED	BATTERY TO STARTER
GREEN	BATTERY TO GENERATOR
YELLOW	COACH BATTERY TO SOLENOID

RECEPTACLES(UP TO 01-24-10)

NO.	PART NUMBER	DESCRIPTION
RCP-1	172839-02-CHT	RECEPTACLE-SINGLE, FLUSH MOUNT
RCP-2	172839-01-CHT	RECEPTACLE-DOUBLE, FLUSH MOUNT
RCP-3	58707-01-000	RECEPTACLE-SINGLE, SURFACE MOUNT
RCP-4	157360-01-000	RECEPTACLE-SINGLE,SURFACE MOUNT,20A
RCP-5	160984-01-CHT	RECEPTACLE-SINGLE,FLUSH MOUNT,20A
RCP-B	58707-02-000	RECEPTACLE-BLANK, JUNCTION
RCP-E	131826-01-CHT	INCLUDES COVER & GASKET

RECEPTACLES(AFTER 01-25-10)

NO.	PART NUMBER	DESCRIPTION
RCP-1	176149-02-CHT/176159-01-CHT	RECEPTACLE-SINGLE/PLATE,FLUSH MOUNT
RCP-2	176149-01-CHT/176159-01-CHT	RECEPTACLE-DOUBLE/PLATE,FLUSH MOUNT
RCP-3	176153-01-CHT	RECEPTACLE-SINGLE, SURFACE MOUNT
RCP-4	157360-01-000	RECEPTACLE-SINGLE,SURFACE MOUNT,20A
RCP-5	176144-01-CHT/176159-01-CHT	RECEPTACLE-SINGLE/PLATE,FLUSH MT,20A
RCP-B	176158-01-CHT	RECEPTACLE-BLANK, JUNCTION
RCP-E	131826-01-CHT	INCLUDES COVER & GASKET
SW-1	176157-01-CHT/176159-01-CHT	SWITH-15A,SINGLE POLE/PLATE

CIRCUIT COLOR LEGEND

110V CIRCUIT	WIRE COLOR	COAXIAL CIRCUIT
A/C CIRCUIT 1	RED	CABLE INPUT W/O SPLITTER
A/C CIRCUIT 2	GRN	REAR TV W/O SPLITTER
GENERAL RECPS 1	BLU	ANTENNA
GENERAL RECPS 2	BRN	FRONT TV
GENERAL RECPS 3	PUR	VCR INPUT
GENERAL RECPS 4	GRY	
REFRIGERATOR/ CONVERTER	YEL	EXT ENT CTR
MICROWAVE	BLK	AUX INPUT
WATER HEATER	WHT	
WASHER/DRYER	GLD	
DISHWASHER	SIL	
	ORG	SATELLITE PLATE INPUT
	ORG/ORG	SATELLITE PLATE OUTPUT
	RED/RED	CABLE INPUT W/SPLITTER
	GRN/GRN	REAR TV W/SPLITTER
	PUR/PUR	VCR OUTPUT

FIRST USED: 96 MH'S

DO NOT SCALE DRAWING

TITLE: PART LISTING-ELECTRICAL

SHEET 2 | PART NO 121339 | REV

2/17/2010

DWG NO 121339

LAMP ASM-PACKAGE,PANCAKE

NO	PART NUMBER	DESCRIPTION
LF1-1	LAMP 98024-01-CHT SCREW G11-08-16U (4) CONNECTOR 58028-01-000 (2)	LAMP ASM, FROSTED LENS, 1 BULB W/SWITCH PROGRESSIVE DYNAMICS INC.
LF2-1	LAMP 98024-03-CHT SCREW G11-08-16U (6) CONNECTOR 58028-01-000 (2)	LAMP ASM, FROSTED LENS, 2 BULB W/SWITCH PROGRESSIVE DYNAMICS INC.
LO1-1	LAMP 98024-05-CHT SCREW G11-08-16U (4) CONNECTOR 58028-01-000 (2)	LAMP ASM, OPTI CLEAR LENS, 1 BULB W/SWITCH PROGRESSIVE DYNAMICS INC.
LO2-1	LAMP 98024-06-CHT SCREW G11-08-16U (6) CONNECTOR 58028-01-000 (2)	LAMP ASM, OPTI CLEAR LENS, 2 BULB W/SWITCH PROGRESSIVE DYNAMICS INC.
LF1N1	LAMP 98024-07-CHT SCREW G11-08-16U (4) CONNECTOR 58028-01-000 (2)	LAMP ASM, FROSTED LENS, 1 BULB W/O SWITCH PROGRESSIVE DYNAMICS INC.
LF2N1	LAMP 98024-08-CHT SCREW G11-08-16U (6) CONNECTOR 58028-01-000 (2)	LAMP ASM, FROSTED LENS, 2 BULB W/O SWITCH PROGRESSIVE DYNAMICS INC.
LFSN1	LAMP 98024-09-CHT SCREW G11-08-16U (6) CONNECTOR 58028-01-000 (2)	LAMP ASM, SINGLE FROSTED LENS, 2 BULB W/O SWITCH PROGRESSIVE DYNAMICS INC.

LAMP ASM-PACKAGE,PORCH

NO	PART NUMBER	DESCRIPTION
LEXT-1	LAMP 97917-01-CHT SCREW G67-10-129 (4) CONNECTOR 58028-01-000 (2)	LAMP ASM-PORCH, SURFACE MOUNT BARGMAN
LEXT-2UL	LAMP 8089-01-000 SCREW G68-06-10E (2) CONNECTOR 58028-01-000 (2)	LAMP ASM-PORCH, RECESSED UL LIST JRV PROD
LEXT-2CA	LAMP 8089-02-000 SCREW G68-06-10E (2) CONNECTOR 58028-01-000 (2)	LAMP ASM-PORCH, RECESSED CAN LIST JRV PROD
LEXT-3	LAMP 171513-01-CHT SCREW G67-10-129 (2) CONNECTOR 58028-01-000 (2)	LAMP ASM-PORCH SURFACE MOUNT OPTRONICS

LAMP ASM-PACKAGE,PANCAKE

NO	PART NUMBER	DESCRIPTION
LF1-2	LAMP 137417-01-CHT SCREW G11-08-16U (4) CONNECTOR 58028-01-000 (2)	LAMP ASM, FROSTED LENS, 1 BULB W/SWITCH PROGRESSIVE DYNAMICS INC.
LF2-2	LAMP 137417-04-CHT SCREW G11-08-16U (6) CONNECTOR 58028-01-000 (2)	LAMP ASM, FROSTED LENS, 2 BULB W/SWITCH PROGRESSIVE DYNAMICS INC.
LO1-2	LAMP 137417-02-CHT SCREW G11-08-16U (4) CONNECTOR 58028-01-000 (2)	LAMP ASM, OPTI CLEAR LENS, 1 BULB W/SWITCH PROGRESSIVE DYNAMICS INC.
LO2-2	LAMP 137417-05-CHT SCREW G11-08-16U (6) CONNECTOR 58028-01-000 (2)	LAMP ASM, OPTI CLEAR LENS, 2 BULB W/SWITCH PROGRESSIVE DYNAMICS INC.
LF1N2	LAMP 137417-03-CHT SCREW G11-08-16U (4) CONNECTOR 58028-01-000 (2)	LAMP ASM, FROSTED LENS, 1 BULB W/O SWITCH PROGRESSIVE DYNAMICS INC.
LFSN2	LAMP 137417-06-CHT SCREW G11-08-16U (6) CONNECTOR 58028-01-000 (2)	LAMP ASM, SINGLE FROSTED LENS, 2 BULB W/O SWITCH PROGRESSIVE DYNAMICS INC.

LAMP ASM-PACKAGE,HALOGEN

NO	PART NUMBER	DESCRIPTION
HAL	LAMP 123775-01-CHT SCREW (SUPPLIED) CONNECTOR 58028-01-000 (2)	LAMP ASM-HALOGEN, READING 1 BULB
HAL-S	LAMP 123775-01-CHT SPACER 123775-02-CHT SCREW G13-06-16U (3) CONNECTOR 58028-01-000 (2)	LAMP ASM-HALOGEN, READING WITH 3/4" SPACER 1 BULB
HAL-2	LIGHT-HAL,ROUND 165170-01-CHT SCREW G13-06-12B (2) CONNECTOR 58028-01-000 (2)	LIGHT-HALOGEN, ROUND 3"
HAL-4	LIGHT-HAL,ROUND 165643-01-CHT SCREW G13-05-16B (3) CONNECTOR 58028-01-000 (2) (SEE DETAIL CA)	LIGHT-HALOGEN, ROUND 4.5"

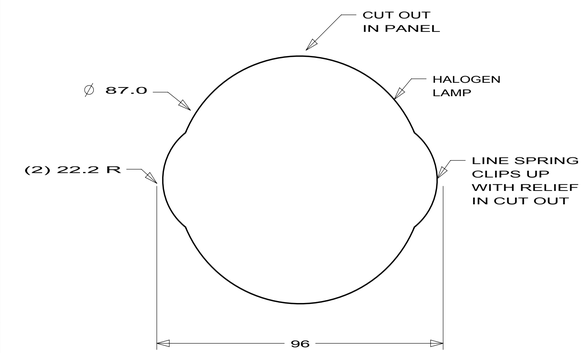

DETAIL CA

LEGEND

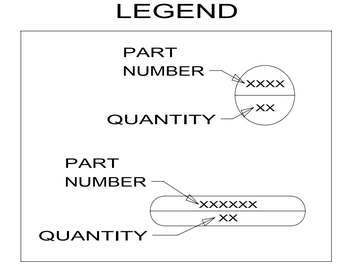

FIRST USED

96 MH'S

DO NOT SCALE DRAWING

TITLE:

PART LISTING-ELECTRICAL

SHEET 3 | PART NO 121339 | REV

2/17/2010

DWG NO 121339

LAMP ASM-PACKAGE,FLUORESCENT

NO	PART NUMBER	DESCRIPTION
FLU-1	LAMP 91936-02-CHT SCREW G11-08-12U (4) CONNECTOR 58028-01-000 (2)	LAMP ASM-FLUORESCENT 12" 2 BULB W/SWITCH THIN-LITE
FLU-2	LAMP 91936-01-CHT SCREW G11-08-12U (4) CONNECTOR 58028-01-000 (2)	LAMP ASM-FLUORESCENT 18" 2 BULB W/SWITCH THIN-LITE
FLU-3	LAMP 127327-01-CHT SCREW G11-08-12U (2) CONNECTOR 58028-01-000 (2)	LAMP ASM-FLUORESCENT 18" 1-12" BULB W/SWITCH THIN-LITE
FLU-4	LAMP 130338-01-CHT SCREW G11-08-12U (4) CONNECTOR 58028-01-000 (2)	LAMP ASM-FLUORESCENT 18" 2 BULB SURFACE MOUNT W/SWITCH THIN-LITE
FLU-5	LAMP 153464-02-CHT SCREW G11-08-12U (4) CONNECTOR 58028-01-000 (2)	LAMP ASM-FLUORESCENT 12" 2 BULB W/SWITCH COOL WHITE BULB THIN-LITE CUTOUT-122 X 336
FLU-6	LAMP 130338-02-CHT SCREW G11-08-12U (4) CONNECTOR 58028-01-000 (2)	LAMP ASM-FLUORESCENT 18" 2 BULB SURFACE MOUNT WARM WHITE BULB W/SWITCH THIN-LITE
FLU-7	LAMP 153464-05-CHT SCREW G11-08-12U (4) CONNECTOR 58028-01-000 (2)	LAMP ASM-FLUORESCENT 12" 2 BULB W/SWITCH WARM WHITE BULB THIN-LITE CUTOUT-122 X 336
FLU-8	LAMP 173072-01-CHT SCREW G11-08-12U (2) CONNECTOR 58028-01-000 (2)	LAMP ASM-FLUORESCENT 18" ONE 8 WATT BULB W/SWITCH OPTRONICS
FLUN1	LAMP 91936-04-CHT SCREW G11-08-12U (4) CONNECTOR 58028-01-000 (2)	LAMP ASM-FLUORESCENT 12" 2 BULB W/O SWITCH THIN-LITE
FLUN2	LAMP 91936-03-CHT SCREW G11-08-12U (4) CONNECTOR 58028-01-000 (2)	LAMP ASM-FLUORESCENT 18" 2 BULB W/O SWITCH THIN-LITE
FLUN3	LAMP 153464-01-CHT SCREW G11-08-12U (4) CONNECTOR 58028-01-000 (2)	LAMP ASM-FLUORESCENT 12" 2 BULB W/O SWITCH COOL WHITE BULB THIN-LITE CUTOUT-122 X 336
FLUN4	LAMP 153464-03-CHT SCREW G11-08-12U (6) CONNECTOR 58028-01-000 (2)	LAMP ASM-FLUORESCENT 18" 2 BULB W/O SWITCH COOL WHITE BULB THIN-LITE CUTOUT-122 X 480
FLUN5	LAMP 153464-06-CHT SCREW G11-08-12U (6) CONNECTOR 58028-01-000 (2)	LAMP ASM-FLUORESCENT 18" 2 BULB W/O SWITCH WARM WHITE BULB THIN-LITE CUTOUT-122 X 480
FLUN6	LAMP 153464-04-CHT SCREW G11-08-12U (6) CONNECTOR 58028-01-000 (2)	LAMP ASM-FLUORESCENT 12" 2 BULB W/O SWITCH WARM WHITE BULB THIN-LITE CUTOUT-122 X 336

LAMP ASM-PACKAGE,MAKEUP LAMP

NO	PART NUMBER	DESCRIPTION
LMU3-1	LAMP 110235-01-CHT SCREW W/SPACER (SUPPLIED) CONNECTOR 58028-01-000 (2)	LAMP ASM-MAKEUP (W/O MIRROR) 3 BULB (SUPPLIED) PROGRESSIVE DYNAMICS
LMM3-2	LAMP 123774-03-CHT SCREW (SUPPLIED) BULB 123918-01-000 (3) CONNECTOR 58028-01-000 (2)	LAMP ASM-MAKEUP (W/MIRROR) 3 BULB GUSTOFSON
LMU3-2	LAMP 138116-01-CHT SCREW (SUPPLIED) BULB 123918-01-000 (3) CONNECTOR 58028-01-000 (2)	LAMP ASM-MAKEUP (W/O MIRROR) 3 BULB GUSTOFSON
LMU3-3	LAMP 162446-01-CHT SCREW (SUPPLIED) BULB 123918-01-000 (3) CONNECTOR 58028-01-000 (2)	LAMP ASM-MAKEUP (W/O MIRROR) 3 BULB GUSTOFSON
LMU4-1	LAMP 110235-02-CHT SCREW G11-08-16U (2) CONNECTOR 58028-01-000 (2)	LAMP ASM-MAKEUP (W/O MIRROR) 4 BULB PROGRESSIVE DYNAMICS
LMU4-2	LAMP 138116-02-CHT SCREW (SUPPLIED) BULB 123918-01-000 (4) CONNECTOR 58028-01-000 (2)	LAMP ASM-MAKEUP (W/O MIRROR) 4 BULB GUSTOFSON
LMU4-3	LAMP 162446-02-CHT SCREW (SUPPLIED) BULB 123918-01-000 (4) CONNECTOR 58028-01-000 (2)	LAMP ASM-MAKEUP (W/O MIRROR) 4 BULB GUSTOFSON
LMM4-2	LAMP 123774-01-CHT SCREW G11-08-16U (2) BULB 123918-01-000 (4) CONNECTOR 58028-01-000 (2)	LAMP ASM-MAKEUP (W/MIRROR) 4 BULB GUSTOFSON

LAMP ASM-PACKAGE,OTHER

NO	PART NUMBER	DESCRIPTION
LSH-1	LAMP 121935-01-CHT SCREW G11-08-16U (4) CONNECTOR 58028-01-000 (2)	LAMP ASM-SHOWER PROGRESSIVE DYNAMICS INC.
LSH-2	LAMP 164039-01-CHT SCREW G11-08-16U (3) CONNECTOR 58028-01-000 (2)	LIGHT-DOME,SHOWER
LSH-3	LAMP 164040-01-CHT SCREW G13-07-12U (3) CONNECTOR 58028-01-000 (2)	LIGHT-DOME,SHOWER GLASS
LCR-1	LAMP 61424-01-000 SCREW G11-08-12U (4) CONNECTOR 58028-01-000 (2)	LAMP ASM-COURTESY,AISLE RAMCO (RECTANGULAR)
LCS-1	LAMP 108354-01-CHT SCREW G11-08-12U (4) CONNECTOR 58028-01-000 (2)	LAMP ASM-COURTESY,AISLE ITC MARINE (SQUARE)
READ-1	LIGHT-READING 132427-01-CHT SCREW SUPPLIED W/ LIGHT CLIP-U 141395-02-CHT (2) CONNECTOR 58028-01-000 (2)	LIGHT-READING,SWIVEL,ROUND 1 BULB
READ-2	LIGHT-READING 128786-02-CHT SCREW G11-08-16J (2) BULB 123917-01-000 CONNECTOR 58028-01-000 (2)	LIGHT,READING,SWIVEL
READ-3	LIGHT-READING 170833-01-CHT SCREW SUPPLIED W/LIGHT CONNECTOR 58028-01-000 (2)	LIGHT,READING,HAL
READ-4	LIGHT-READING, LED,FLEX 174060-01-CHT SCREW SUPPLIED W/LIGHT CONNECTOR 58028-01-000 (2)	LIGHT,READING,LED,FLEX
READ-5	LIGHT-READING, LED,SWIVEL 174815-01-CHT SCREW SUPPLIED W/LIGHT CONNECTOR 58028-01-000 (2)	LIGHT,READING, LED SWIVEL .05 A

LAMP ASM-PACKAGE,PANCAKE

NO	PART NUMBER	DESCRIPTION
LF1-3	LAMP 170693-01-CHT SCREW G11-08-16U (4) CONNECTOR 58028-01-000 (2)	LAMP ASM, FROSTED LENS, 1 BULB W/SWITCH GUSTAFSON
LF2-3	LAMP 170693-04-CHT SCREW G11-08-24U (4) CONNECTOR 58028-01-000 (2)	LAMP ASM, FROSTED LENS, 2 BULB W/SWITCH GUSTAFSON
LO1-3	LAMP 170693-02-CHT SCREW G11-08-16U (4) CONNECTOR 58028-01-000 (2)	LAMP ASM, OPTI CLEAR LENS, 1 BULB W/SWITCH GUSTAFSON
LO2-3	LAMP 170693-05-CHT SCREW G11-08-24U (4) CONNECTOR 58028-01-000 (2)	LAMP ASM, OPTI CLEAR LENS, 2 BULB W/SWITCH GUSTAFSON
LF1N3	LAMP 170693-03-CHT SCREW G11-08-16U (4) CONNECTOR 58028-01-000 (2)	LAMP ASM, FROSTED LENS, 1 BULB W/O SWITCH GUSTAFSON
LFSN3	LAMP 170693-06-CHT SCREW G11-08-24U (4) CONNECTOR 58028-01-000 (2)	LAMP ASM, SINGLE FROSTED LENS, 2 BULB W/O SWITCH GUSTAFSON
LOSN3	LAMP 170693-07-CHT SCREW G11-08-24U (4) CONNECTOR 58028-01-000 (2)	LAMP ASM, OPTICLEAR LENS, 2 BULB W/O SWITCH GUSTAFSON
LO1N3	LAMP 170693-08-CHT SCREW G11-08-16U (4) CONNECTOR 58028-01-000 (2)	LAMP ASM, OPTICLEAR LENS, 1 BULB W/O SWITCH GUSTAFSON

LEGEND

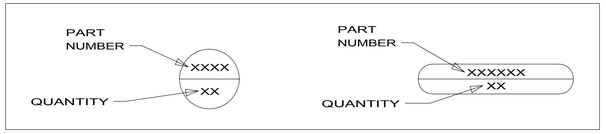

FIRST USED: 96 MH'S

DO NOT SCALE DRAWING

TITLE: PART LISTING-ELECTRICAL

SHEET 4 | PART NO 121339 | REV

2/17/2010

DWG NO 121339

ANTENNA ASM-PACKAGE

NO	PART NUMBER	DESCRIPTION
ANT-1	ANTENNA 76319-24-000 HARDWARE-INTERIOR 76319-25-000 BUMPER 69726-02-000 (2) 1 CLIP 80734-02-000	ROOF MOUNT TV ANTENNA ASM 25.5" MAST 600 MAX COAX LENGTH
ANT-2	ANTENNA 076319-23-000(UP TO 05-31-09) 173519-01-CHT(AFTER 06-01-09) HARDWARE-INTERIOR 76319-25-000 BUMPER 69726-02-000 (2) 1 ADAPTER SUPPLIED W/ANTENNA	ROOF MOUNT TV ANTENNA ASM 44.5" MAST 600 MAX COAX LENGTH
ANT-2W	ANTENNA 076319-23-000(UP TO 05-31-09) 173519-01-CHT(AFTER 06-01-09) HARDWARE-INTERIOR 76319-25-000 BUMPER 69726-02-000 (2) 1 ADAPTER SUPPLIED W/ANTENNA WEDGE 76319-26-000	ROOF MOUNT TV ANTENNA ASM 44.5" MAST 600 MAX COAX LENGTH
ANTA-1	ANTENNA 158270-01-CHT BUMPER 69726-02-000 (2) 1 ADAPTER SUPPLIED W/ANTENNA ANTENNA-WINGMAN, ACCESSORY 173519-03-CHT	ROOF MOUNT TV ANTENNA ASM AUTOMATIC 600 MAX COAX LENGTH
ANT-3	ANTENNA-TV ROOF MNT,ROUND 167632-01-CHT PLATE-ROOF, CABLE ENTRY 146488-01-000 SCREW G67-10-129 (10) CABLE ASM-COAX 87105-01-006 ADAPTER 82134-01-000	ROOF MOUNT OMNI- DIRECTIONAL ANTENNA MOUNTING SCREWS SUPPLIED WITH ANTENNA
ANT-4	ANTENNA 173519-01-CHT HARDWARE-INTERIOR 76319-25-000 BUMPER 69726-02-000 (2) 1 ADAPTER SUPPLIED W/ANTENNA ANTENNA-HANDLE EXTENSION 173519-02-CHT	ROOF MOUNT TV ANTENNA ASM 44.5" MAST 600 MAX COAX LENGTH

SENSORS

NO	PART NUMBER	DESCRIPTION
LPGD	LP GAS DETECTOR 150138-03-CHT SCREW G68-06-10U (2)	DETECTOR-LP GAS

PANELS

NO	PART NUMBER	DESCRIPTION
SOLAR	PANEL-SOLAR 10 WATT 151647-01-000 (UP TO 03-14-10) 176161-01-000 (AFTER 03-15-10) SCREW G11-08-12U (4)	SOLAR PANEL

ANTENNA ASM-PACKAGE

ANTEXT-1	CABLE ASM-EXTENS 77069-02-000	RADIO ANTENNA CABLE EXTENSION 2400MM USABLE LENGTH
ANTKIT-1	ADAPTER-PLATE 76319-06-000 SCREW G11-08-08T (6) CLIP-WIRE 80734-02-000 SCREW G11-08-08T	PLATE ASM-ADAPTERS CABLE ROOF MOUNTING PLATE W/ CABLE-CABLE ADAPTER, FITTINGS, AND CABLE RETAINING CLIP
ANT-R	ANTENNA-RADIO 90944-01-000 EXTENDER-SHAFT ANTENNA 109889-04-000 BRACKET-ANTENNA GROUND 147741-01-CHT	ROOF MOUNT RADIO ANTENNA
ANTEXT-2	CABLE ASM-EXTENS 77069-03-000	RADIO ANTENNA CABLE EXTENSION 6600 MM USABLE LENGTH
ANT-A	ANTENNA-RADIO 90944-01-000 EXTENDER-SHAFT 76 MM 171825-01-000 (2) BRACKET-GROUND 147741-01-CHT NUT OMD01K-06-000 (2)	ROOF MOUNT RADIO ANTENNA THICK ROOF

SATELLITE DISH INSTL

NO	PART NUMBER	DESCRIPTION
DM-1	SATELLITE DISH 137135-02-000 SCREW G67-10-12B (8) PLATE & BRACKET (SUPPLIED) SCREW G67-10-12B (10)	SATELLITE DISH ANTENNA ASM MANUAL SETUP
DA-1	SATELLITE DISH 163598-01-CHT PLATE-ROOF,CABLE ENTRY QUAD 146488-03-000 SCREW G67-10-12U (8) (FOR PLATE) SCREW G39-10-12U (12) (FOR SATELLITE DISH)	SATELLITE DISH ANTENNA ASM AUTOMATIC SETUP
DI-1	SATELLITE DISH 154474-04-CHT SCREW G39-10-12B (12) PLATE 146488-01-000 SCREW G67-10-12B (10)	SATELLITE DISH ANTENNA ASM IN MOTION SETUP

SATELLITE DISH INSTL

NO	PART NUMBER	DESCRIPTION
DA-2	SATELLITE DISH 163598-01-CHT PLATE-ROOF,CABLE ENTRY QUAD 146488-03-000 CABLE ASM-COAX 9" 163598-04-000 ADAPTOR-CABLE TO CABLE 82134-01-000 SCREW G67-10-12U (8) (FOR PLATE) SCREW G39-10-12U (12) (FOR SATELLITE DISH)	SATELLITE DISH ANTENNA ASM AUTOMATIC SETUP
DI-2	SATELLITE DISH 154474-04-CHT PLATE-ROOF,CABLE ENTRY QUAD 146488-03-000 CABLE ASM-COAX 9" 163598-04-000 ADAPTOR-CABLE TO CABLE 82134-01-000 SCREW G67-10-12U (8) (FOR PLATE) SCREW G39-10-12U (12) (FOR SATELLITE DISH)	SATELLITE DISH ANTENNA ASM AUTOMATIC SETUP
DM-2	SATELLITE DISH 137135-05-000 PLATE-ROOF,ENTRY (SUPPLIED WITH SATELLITE DISH) SCREW G67-10-12U (8) (FOR ROOF PLATE) SCREW G67-10-12U (10) (FOR SATELLITE DISH)	SATELLITE DISH ANTENNA ASM MANUAL SETUP

LEGEND

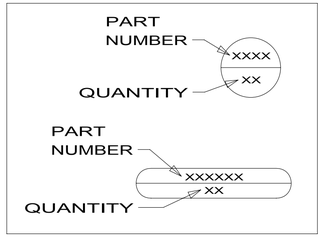

1 ADD BUMPER TO BOTTOM SIDE OF ANTENNA WINGS TO PREVENT DAMAGE TO ROOF.

FIRST USED
96 MH'S

DO NOT SCALE DRAWING

TITLE:
PART LISTING-ELECTRICAL

SHEET 5 | PART NO 121339 | REV

2/17/2010

DWG NO 121339

RECEPTACLE PACKAGE-GFI

NO	PART NUMBER	DESCRIPTION
GFI US	RECEPTACLE 163319-01-CHT BOX 91910-02-000 WIRE-BONDING 133678-03-000 SCREW G13-07-12B (4) CONNECTOR 8313-01-000 TUBING-VINYL 8041-02-000 (300MM) 1	GFI RECEPTACLE WITH COVER AND BOX FOR US APPLICATION 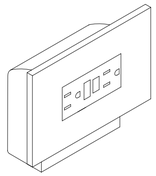
GFI CAN	RECEPTACLE 163319-01-CHT BOX 91910-01-000 WIRE-BONDING 133678-03-000 SCREW G13-07-12B (4) CONNECTOR 8313-01-000 TUBING-VINYL 8041-02-000 (300MM) 1	GFI RECEPTACLE WITH COVER AND BOX FOR CANADA APPLICATION 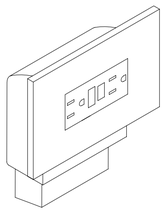

RECEPTACLE PACKAGE-GFI

NO	PART NUMBER	DESCRIPTION
GFI-1 US	RECEPTACLE 163319-01-CHT BOX 133070-01-000 WIRE-BONDING 133678-03-000 SCREW G13-07-12B (4) CONNECTOR 8313-01-000 TUBING-VINYL 8041-02-000 (300MM) 1	GFI RECEPTACLE WITH COVER AND BOX FOR US APPLICATION 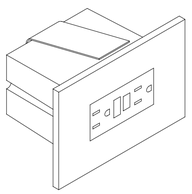
GFI-1 CAN	RECEPTACLE 163319-01-CHT BOX 133070-02-000 WIRE-BONDING 133678-03-000 SCREW G13-07-12B (4) CONNECTOR 8313-01-000 TUBING-VINYL 8041-02-000 (300MM) 1	GFI RECEPTACLE WITH COVER AND BOX FOR CANADA APPLICATION 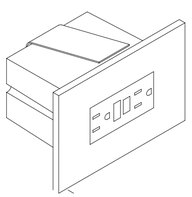

SPACERS

NO	PART NUMBER	DESCRIPTION
SP-01	SPACER 102568-01-XXX	STANDARD 110V RECEPTACLE SPACER (WOOD,VYL RAP,OG) 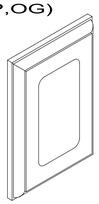
SP-02	SPACER 102568-02-XXX	WOOD SPACER FOR CEILING MOUNTED A/C PREP BOX (US) (WOOD,VYL RAP,OG) 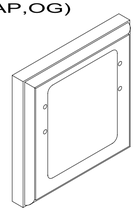
SP-03	SPACER 102568-03-XXX	WOOD SPACER FOR CEILING MOUNTED A/C PREP BOX (CANADA) (WOOD,VYL RAP,OG) 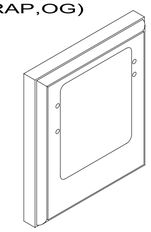
SP-04	SPACER 133713-01-CHT	STANDARD 110V RECEPTACLE SPACER (WOOD,VYL RAP,BEV) 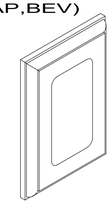
SP-05	SPACER 133713-20-XXX	STANDARD 110V RECEPTACLE SPACER (WOOD,BEV) 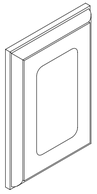
SP-21	SPACER 126052-01-XXX	WOOD SPACER FOR 1 - 110V RECEPTACLE AND 1 - REAR TV (12V) JACK (WOOD,BEV) 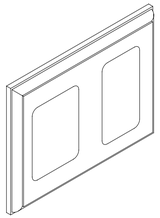

LEGEND

MISC.	SPACER
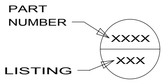	

1 APPLY TUBING TO BARE GROUND WIRES.

NOTES:

FIRST USED 96 MH'S

DO NOT SCALE DRAWING

TITLE: PART LISTING-ELECTRICAL

SHEET 6 | PART NO 121339 | REV

2/17/2010

DWG NO 121339

PREP-A/C,RECESSED (W/OUT FACTORY A/C)

NO	PART NUMBER	DESCRIPTION
PREP A/C-US	BOX 91910-02-000 COVER 84099-02-CHT LABEL 91243-01-000 SCREW G13-07-12B (4) CONNECTOR 8313-01-000 (3)	BOX AND EQUIPMENT USED FOR A/C PREP (W/OUT FACTORY A/C). US APPLICATION (RECESSED IN ROOF) 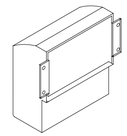
PREP A/C-CAN	BOX 91910-01-000 COVER 84099-02-CHT LABEL 91243-01-000 SCREW G13-07-12B (4) CONNECTOR 8313-01-000 (3)	BOX AND EQUIPMENT USED FOR A/C PREP (W/OUT FACTORY A/C). CANADA APPLICATION (RECESSED IN ROOF) 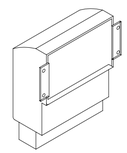

CONNECTION BOX-POWER CORD

NO	PART NUMBER	DESCRIPTION
J-PC 30 J-PC 30-US J-PC 30-CA	BOX 8289-01-000 COVER 8294-01-000 SCREW G67-10-10B (2) WIRE ASM-GROUND 133678-02-000 CONNECTOR 8314-01-000 (3) CONNECTOR 8356-02-000 CONNECTOR (PC) 8355-01-000	CONNECTION BOX IN POWER CORD COMPT FOR POWER CORD (US & CA APPLICATION) 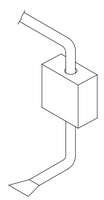

CONNECTION BOX-GENERATOR RECEPTACLE

NO	PART NUMBER	DESCRIPTION
J-RCP 30 J-RCP 30-US J-RCP 30-CA	BOX 8289-01-000 RECEPTACLE 24924-02-000 COVER 69238-01-000 SCREW G67-10-10B (2) WIRE ASM-GROUND 133678-02-000 133678-04-000 CONNECTOR 8314-01-000 TUBING-VINYL 8041-02-000 (150MM) 1	CONNECTION BOX IN POWER CORD COMPT FOR THE GENERATOR RECEPTACLE (US & CA APPLICATION) 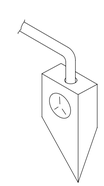

CONNECTION BOX, GENERATOR SERVICE FEED

NO	PART NUMBER	DESCRIPTION
J-GEN 30 J-GEN 30-US J-GEN 30-CA	BOX 8289-01-000 COVER 8294-01-000 SCREW G67-10-10B (2) WIRE ASM-GROUND 133678-02-000 WIRE NUT-GREY 8314-01-000 (3) CONNECTOR-WIRE 8356-01-000	BOX AND EQUIPMENT USED FOR CONNECTING THE GENERATOR LEADS TO THE SERVICE ENTRANCE WIRES (US & CA APPLICATION) 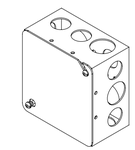

PREP-A/C,SURFACE (W/OUT FACTORY A/C)

NO	PART NUMBER	DESCRIPTION
PREP SURF	BOX 93603-01-000 COVER 53337-01-000 LABEL 91243-01-000 WIRE-BONDING 8019-01-000 SCREW G11-08-12B (2) TERMINAL 8328-01-000 CONNECTOR 8313-01-000 (2) CONNECTOR 8311-01-000	SURFACE MOUNT, US AND CANADA, BOX AND EQUIPMENT FOR A/C PREP (W/OUT FACTORY A/C). TYPICALLY LOCATED ON OVERHEAD CABINET INNER WALL OR ON CEILING. 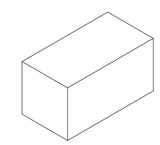

LEGEND

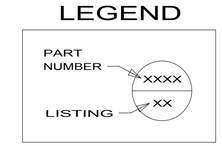

1 APPLY TUBING TO BARE GROUND WIRES.

NOTES:

FIRST USED	96 MH'S
	DO NOT SCALE DRAWING
TITLE:	PART LISTING-ELECTRICAL
SHEET 7	PART NO 121339 REV

2/17/2010

RELEASE	REV A	DATE	DWG NO 171037

REV	ZONE	REVISION RECORD	DATE	DFTR-ORIG

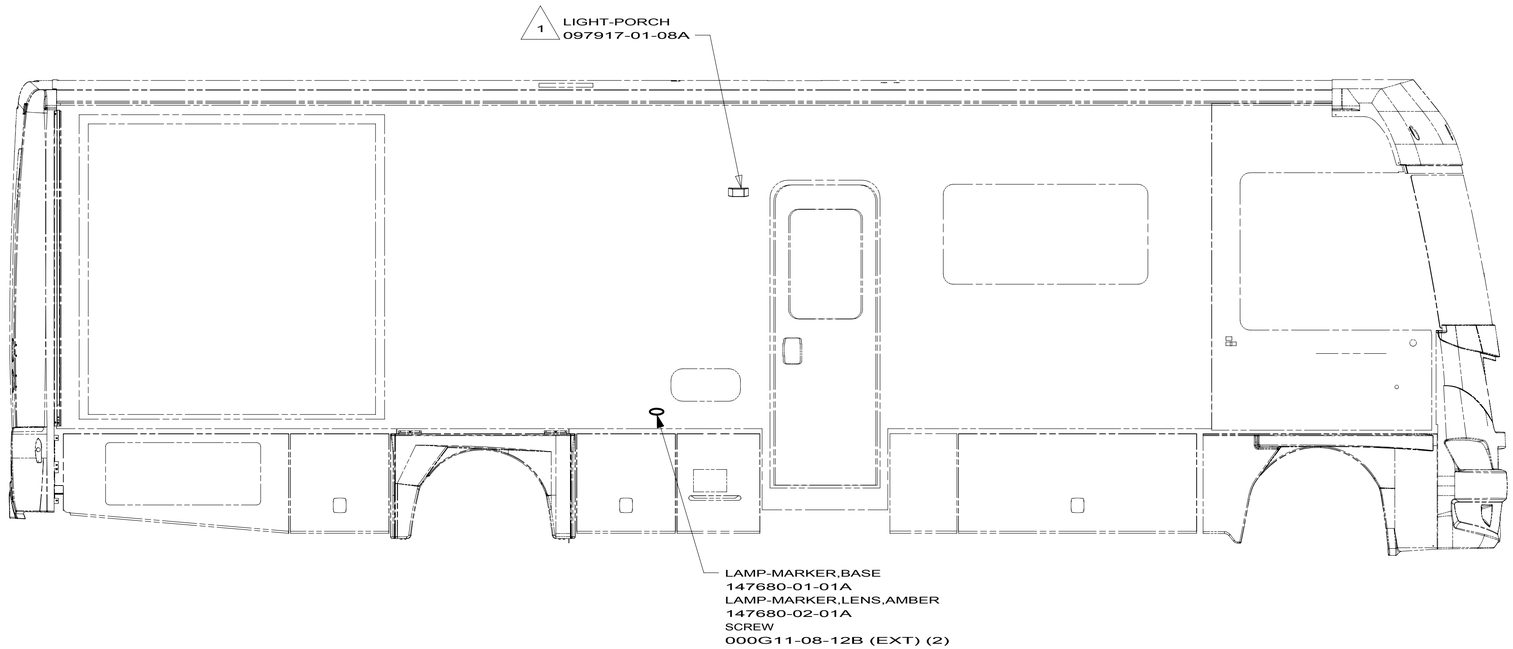

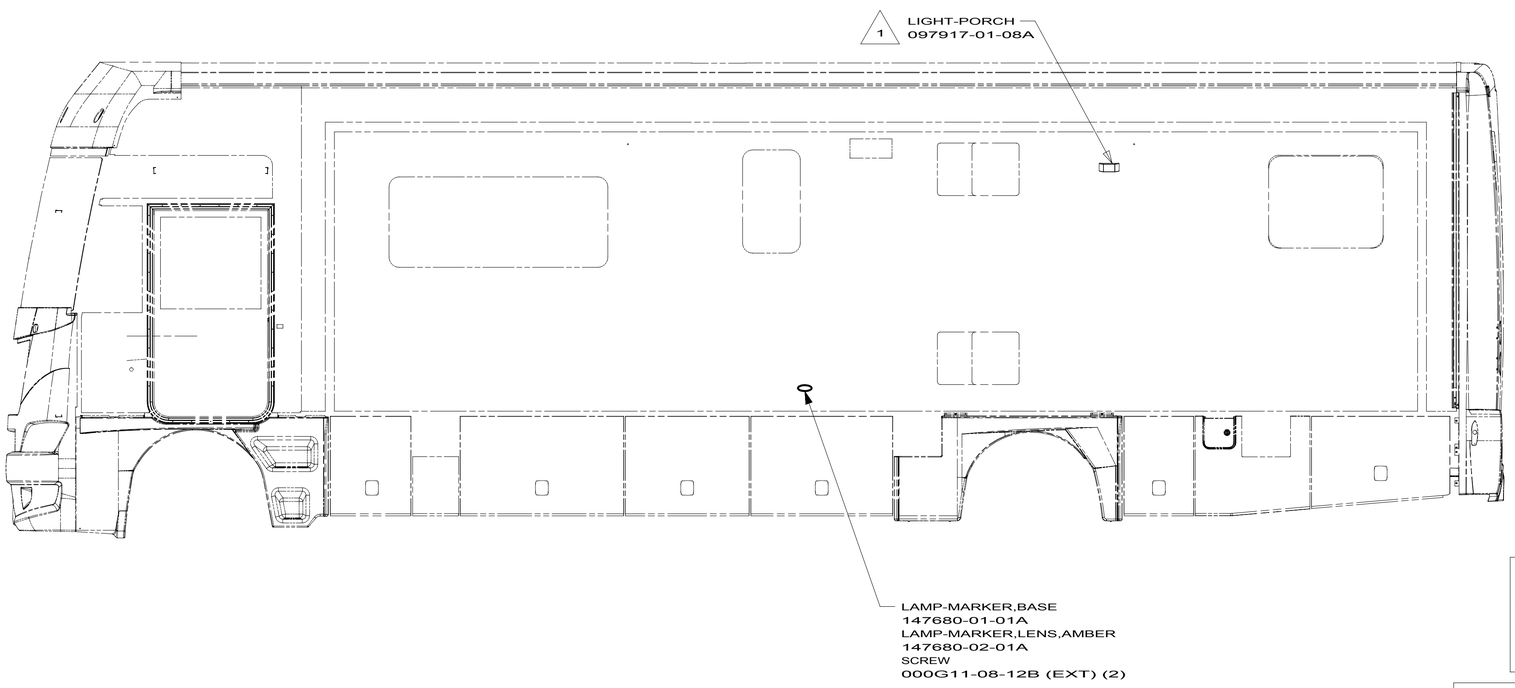

265 CODES/STANDARDS-CSA/CMVSS

1B1 CODES/STANDARDS USA

1B1 265

X-X

FOR ELECTRICAL CALLOUTS SEE DWG NO. 121339-01-000

FOR ELECTRICAL TORQUE SPECIFICATIONS SEE DWG NO. 128783-01-000

1 NOT USED ON SHELLS.

NOTES:

COPYRIGHT 2010
WINNEBAGO
INDUSTRIES, INC.

DFTR	ORIG. DATE
CHKR	ALL DIMENSIONS ARE IN MILLIMETERS
P.E.	
M.E.	FIRST USED
DSNR	10 J-SERIES

UNSPECIFIED TOLERANCES ARE:		
WHOLE DIM (X)	:	3
ONE-PLACE (X.X)	:	1.5
TWO-PLACE (X.XX)	:	0.50
ANGLE	:	1°

THIRD ANGLE PROJECTION

MATERIAL:

DO NOT SCALE DRAWING

TITLE:
WIRING INSTL-EXTERIOR LAMPS

SHEET 1 OF 3	PART NO 171037	REV

REF: 1

3/18/2010

DWG NO 171037

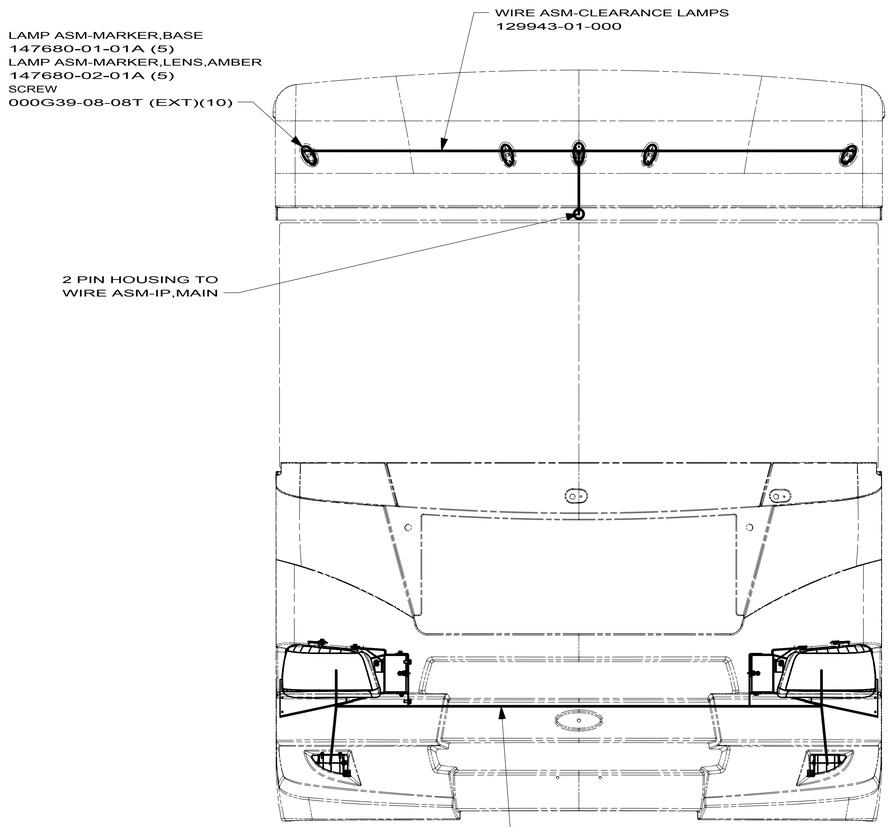

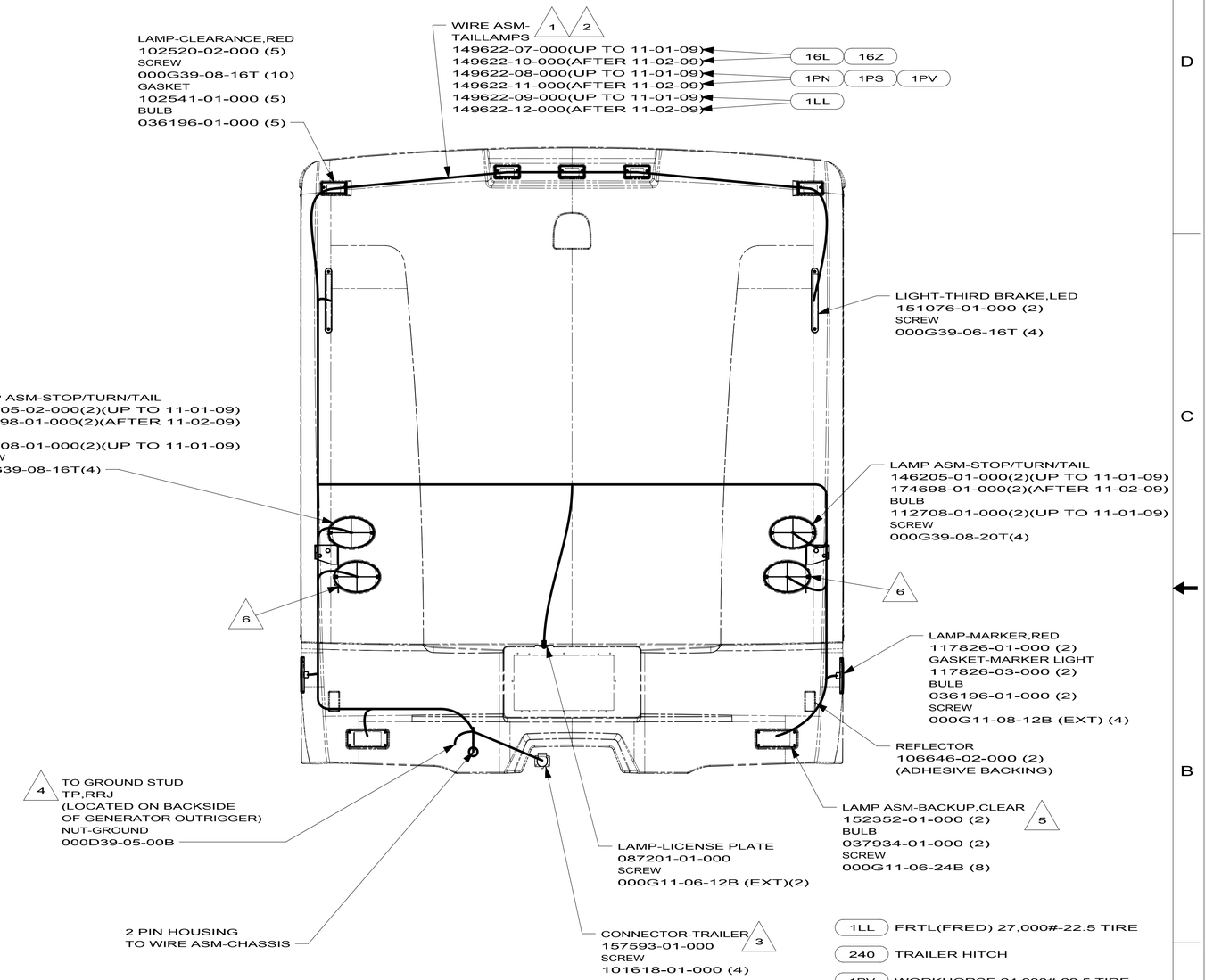

6 LAMP WILL ONLY BE USED AS A TAILLAMP.

5 MOUNT LAMP ASM SO THAT THE LABEL TOP IS IN THE UP POSITION.

4 CLEAN PAINT OFF METAL (BOLT) BEFORE CONNECTING GROUND TO INSURE CONTACT.

3 CONNECTOR-PLUG,TRAILER 146246-01-000 TO BE SUPPLIED LOOSE IN COACH WITH 240

2 SECURE WIRE ASM APPROX. EVERY 450 TO BACKWALL BRACKETS. USE TIE-WIRE 008343-01-000 OR 093147-01-000 AS APPROPRIATE.

1 GATHER ALL EXCESS WIRE AFTER MAKING ALL CONNECTIONS AND BUNDLE AND SECURE WITH TIE-WIRE 008343-01-000 OR 093147-01-000.

NOTES:

1LL	FRTL(FRED) 27,000#-22.5 TIRE
240	TRAILER HITCH
1PV	WORKHORSE 24,000#-22.5 TIRE
1PS	WORKHORSE 22,000#-22.5 TIRE
16Z	FORD 24,000#-22.5 ALUM WHEEL
16L	FORD 22,000#-22.5 AL WHL
265	CODES/STANDARDS-CSA/CMVSS
1B1	CODES/STANDARDS USA

1B1 265

FOR ELECTRICAL TORQUE SPECIFICATIONS SEE DWG NO. 128783-01-000

X-X FOR ELECTRICAL CALLOUTS SEE DWG NO. 121339-01-000

FIRST USED
10 J-SERIES

DO NOT SCALE DRAWING

TITLE:
WIRING INSTL-EXTERIOR LAMPS

SHEET 2 PART NO 171037 REV

3/18/2010

DWG NO 171037

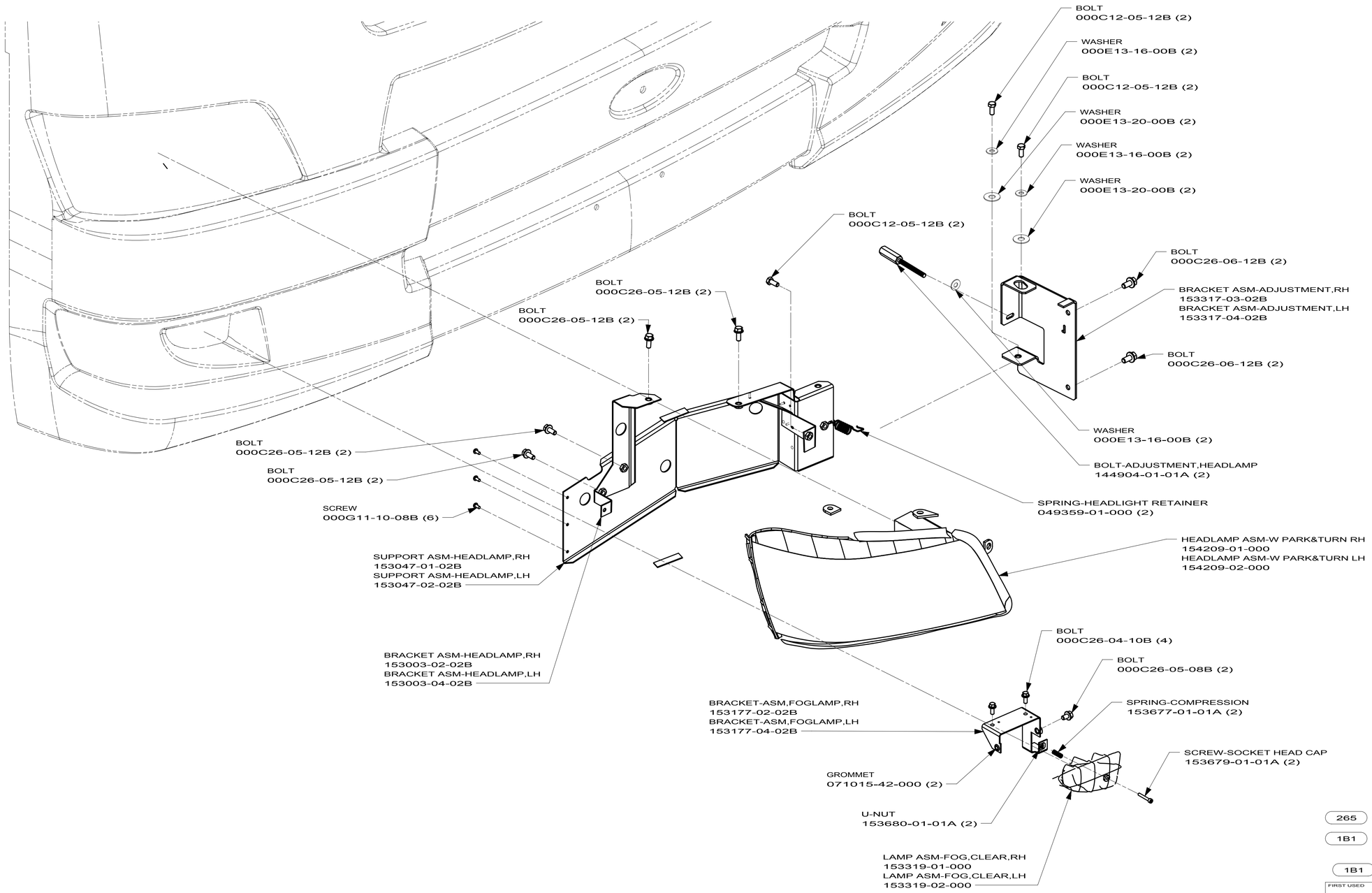

265 CODES/STANDARDS-CSA/CMVSS

1B1 CODES/STANDARDS USA

1B1 265

FOR ELECTRICAL TORQUE SPECIFICATIONS SEE DWG NO. 128783-01-000

X-X FOR ELECTRICAL CALLOUTS SEE DWG NO. 121339-01-000

FIRST USED

10 J-SERIES

DO NOT SCALE DRAWING

TITLE:

WIRING INSTL-EXTERIOR LAMPS

SHEET 3 | PART NO 171037 | REV

3/18/2010

097917-01-08A/09A

KEY	PART NUMBER	U/M	DESCRIPTION	VENDOR NO.
	097917-01-700	EA	LENS-LIGHT, CLEAR	30-78-021

COPYRIGHT © 2009 WINNEBAGO INDUSTRIES INC.

DWG NO 169925

WIRE ASM-IP,MAIN

LABEL-CB PREP OPTION 104678-01-000 (4)

CB POWER PROVISION

YELLOW +12V
WHITE GROUND
COAX ANTENNA
(SEE REVERSE SIDE ALSO)

TO CUSTOMERS CB RADIO WIRING

WHT YEL

DETAIL EA (579)

(193) (9) WIRE ASM-TV ANTENNA,POWER 160533-01-000

2 PIN HOUSING CONNECTS TO WIRE ASM-CLEARANCE FRONT

BUTT SPLICE (2) TO TV POWER CONTROLLER

(36N) FAN DEFROSTER 122856-01-000 (2)
SCREW 000G39-08-16E (6)
BUTT SPLICE TO AUX FANS
LE-GRN
LF-YEL
XW-BLK

(70C) (10) RECEIVER-SAT RADIO 163142-16-000
DOCKING KIT 163142-17-000
BRACKET 168979-03-02B

(7) (70C) CABLE-ANTENNA 158494-02-000

(16L) (16Z) WIRE ASM-IP,MAIN 170456-01-000
(1PV) (1PS) 170457-01-000
(1LL) 170458-01-000

JA

FEMALE TERMINALS TO JACKS DOWN LAMP

TO RELAYS

RING TERMINAL (6) TO GROUND BOLT

3,4 & 6 PIN HOUSINGS TO LEVELING SYSTEM CONTROLS

(1PS) (1PV) BUTT SPLICES (5) TO BRAKE CONTROLLER PREP.
DETAIL EB

(579) BUTT SPLICE (2) TO CB PREP
DETAIL EA

6 & 2 PIN HOUSING TO LEFT MIRROR

12 PIN HOUSING TO WIRE ASM-IP,MIRROR (IN DRIVERS DOOR)

(193) (9) 3-PIN HOUSING FROM TV ANTENNA POWER CONNECTS TO WIRE ASM-CHASSIS

FEMALE TERMINAL (2) TO DOOR DOME LAMP SWITCH

BREAKER PANEL
DETAIL FA

5-PIN HOUSING TO WIRE ASM-ROOF

TO SUNVISOR SHADE (11)
(6) BUTT SPLICES
HHK-BLK
HHL-BLK/GRY } SOLAR SHADE
HHM-BLK
HHN-BLK/GRY } NIGHT SHADE
KE-BRN (2)

3 PIN HOUSING TO VIDEO SWITCH (9) (193)

LIGHT-READING,SWIV W/O SW
149590-01-02A(2)(UP TO 09-27-09)
BULB
123917-01-000(2)(UP TO 09-27-09)
CONNECTOR
058028-01-000(4)(UP TO 09-27-09)
LIGHT-READING,LED
174815-01-01A (AFTER 09-28-09)

TAPE (2) (400MM) (6)

SPEAKER
094097-01-000 (2)
GRILLE
159430-01-01A (2)
SCREW
000G11-08-20B (6)
TAPE-CLEAR
114187-01-000 (600MM)
(2)

SWITCH-MAP LAMP
145638-01-01A
APPLIQUE-SWITCH.RH
156292-05-04A
INSERT-SWITCH.RH
145926-14-02B
(28K)

SWITCH-SUNVISOR
145638-12-01A
APPLIQUE
156292-18-04A
INSERT
145926-08-02B
(28J) OR (15A)

2 PIN HOUSING TO WIRE ASM-SIDEWALL,FRONT

2 & 6 PIN HOUSING TO RIGHT MIRROR

(2) 4 PIN HSGS TO SWITCH LIGHTING

4 PIN HSG TO SWITCH LIGHTING

DETAIL GA

SWITCH
041250-01-000 (12L)
SCREW
000G39-08-16E (2)
SEAL
113285-01-01A (5)

30 PIN HOUSING TO WIRE ASM-CHASSIS

WIRE ASM-IP, MAIN

LABEL 159117-01-01A

TRAILER BRAKE CONTROLLER PROVISION

SEE REVERSE SIDE FOR WIRING INSTRUCTIONS.

(5) BUTT SPLICES SSJ, SSK, LLG, X, ML

DETAIL EB (1PS) (1PV)

J-SERIES

(1LL)	FRTL(FRED) 27,000#-22.5 TIRE
(70C)	RADIO - SATELLITE
(579)	RADIO - CB WIRE PREP
(36N)	FANS-DEFROSTER, AUXILIARY
(28K)	SUNVISORS - MANUAL (2)
(28J)	SUNVISORS - POWERED (2)
(193)	TV ANTENNA-AMPLIFIED SYSTEM
(15D)	GPS-NAVIGATION SYSTEM
(15A)	DRIVER CONVENIENCE PACKAGE
(12L)	DOOR-DRIVER
(1PV)	WORKHORSE 24,000#-22.5 TIRE
(1PS)	WORKHORSE 22,000#-22.5 TIRE
(16Z)	FORD 24,000#-22.5 ALUM WHEEL
(16L)	FORD 22,000#-22.5 AL WHL
(265)	CODES/STANDARDS-CSA/CMVSS
(1B1)	CODES/STANDARDS USA

NOTES:

1. WINNEBAGO WIRE ASSEMBLIES ARE SHOWN FOR CLARITY.

(7) SEE ANTENNA INSTL-RADIO & CB FOR ADDITIONAL INFORMATION.

(6) USE TAPE 136748-01-000 TO SECURE WIRES IN A-POST.

(5) SEAL TO BE INSTALLED OVER SWITCH PLUNGER.

(4) EDGE OF LABEL TO HANG JUST BELOW BOTTOM OF DASH.

(3) CUT LABEL TO READ ONLY MIRROR HEAT. POSITION NEXT TO MIRROR HEAT SWITCH AS SHOWN.

(2) COVER EACH SPEAKER GRILL WITH TAPE-CLEAR 114187-01-000 (600 MM).

(11) CUT VISOR WIRING TO 300MM BEFORE CONNECTING.

(10) NOT USED WITH (15D)

(9) USED ON SHELLS ONLY.

(8) CONNECT CABLE SUPPLIED WITH SATELLITE RADIO TO RECEIVER & PLUG INTO BACK OF RADIO.

X-X FOR ELECTRICAL CALLOUTS SEE DWG NO. 121339-01-000

FOR ELECTRICAL TORQUE SPECIFICATIONS SEE DWG NO. 128783-01-000

(1B1) (265)

FIRST USED 10 D,J,K-SER

DO NOT SCALE DRAWING

TITLE: WIRING INSTL-FRONT END

SHEET 5 | PART NO 169925 | REV

12/29/2009

DWG NO 169925

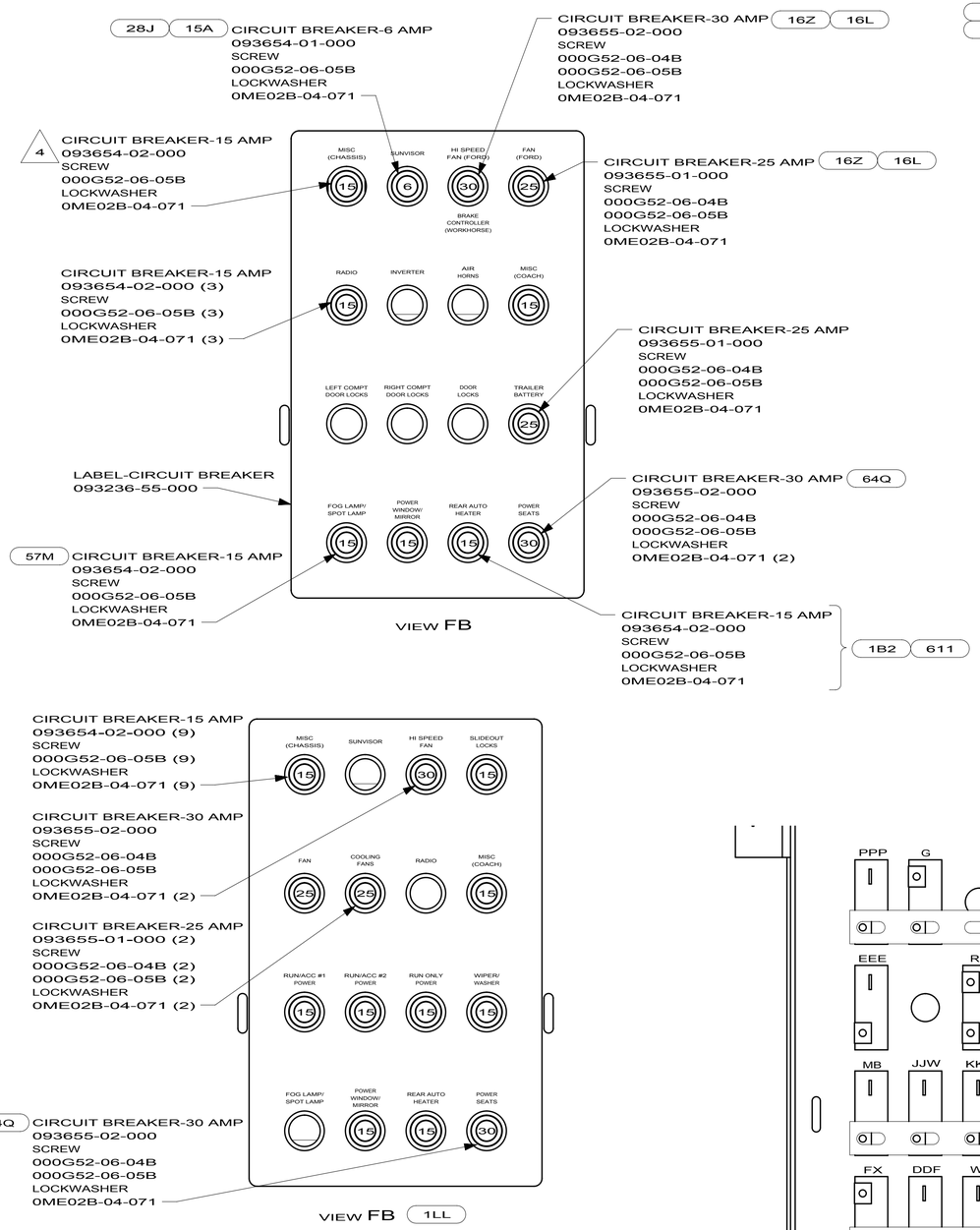

VIEW FB

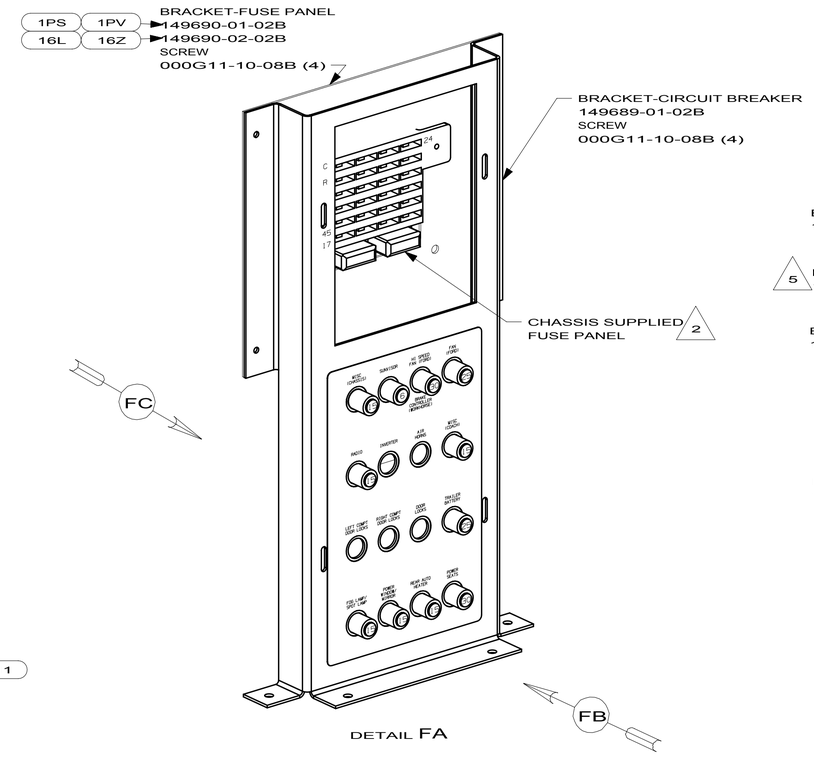

DETAIL FA

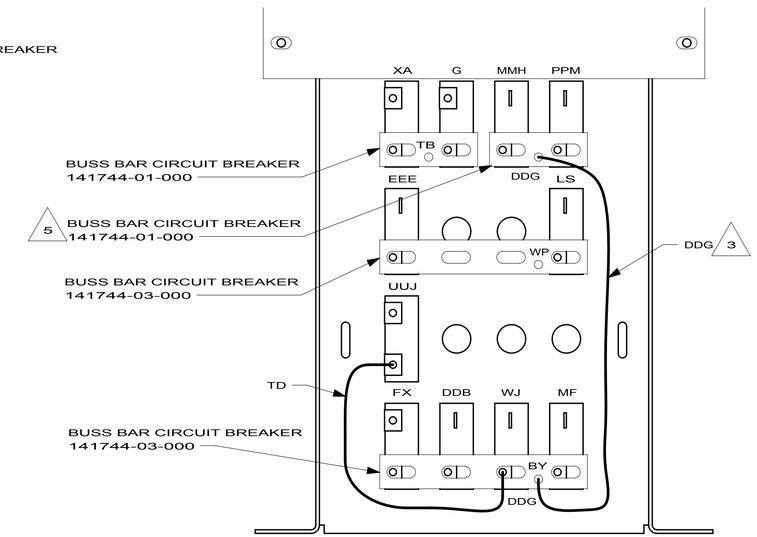

VIEW FC 1 16L 16Z

J-SERIES

VIEW FB 1LL

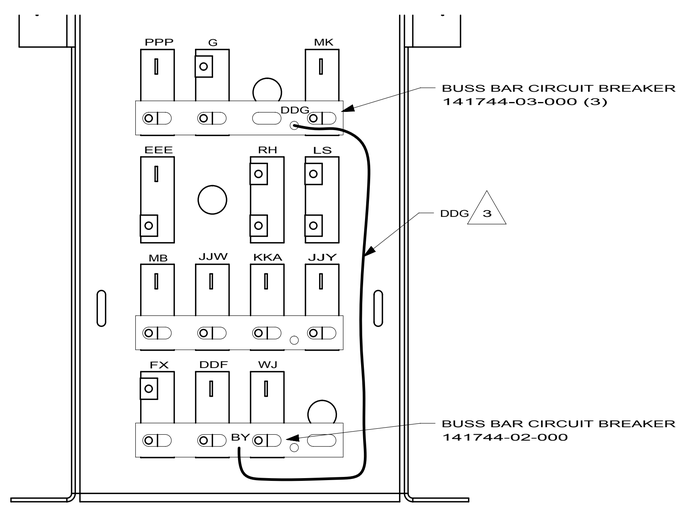

VIEW FC 1LL

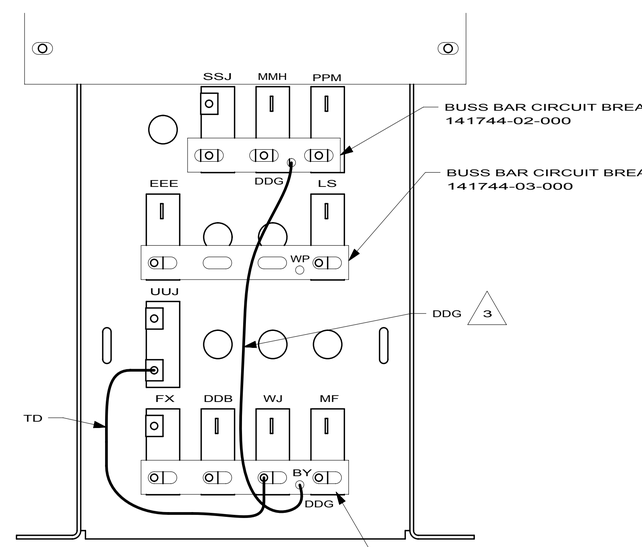

VIEW FC 1 1PS 1PV

1LL	FRTL(FRED) 27,000#-22.5 TIRE
28J	SUNVISORS - POWERED (2)
15A	DRIVER CONVENIENCE PACKAGE
64Q	SEAT PED-6-WAY POWER DRIVER
611	WTR HTR-AUX AUTO/MOTORAID
57M	LAMPS-FOG
1B2	WTR HTR-10GAL/ELEC/LP/MTRAID
1PV	WORKHORSE 24,000#-22.5 TIRE
1PS	WORKHORSE 22,000#-22.5 TIRE
16Z	FORD 24,000#-22.5 ALUM WHEEL
16L	FORD 22,000#-22.5 AL WHL
265	CODES/STANDARDS-CSA/CMVSS
1B1	CODES/STANDARDS USA

NOTES:

1. ALL CIRCUITS ARE IN WIRE ASM-IP,MAIN.
2. WORKHORSE PANEL SHOWN.
3. CONNECT DDG TO HOLE IN BUSS BAR OR TO BOTTOM LUG OF 30 AMP BREAKER.
4. 32H, 35P, 38N, 38T ONLY
5. 32H, 38N, 38T WITH 15A OR 28J

FOR ELECTRICAL TORQUE SPECIFICATIONS SEE DWG NO. 128783-01-000

X-X FOR ELECTRICAL CALLOUTS SEE DWG NO. 121339-01-000

1B1 265

FIRST USED: 10 D,J,K-SER

DO NOT SCALE DRAWING

TITLE: WIRING INSTL-FRONT END

SHEET 6 | PART NO 169925 | REV

12/29/2009

DWG NO 169925

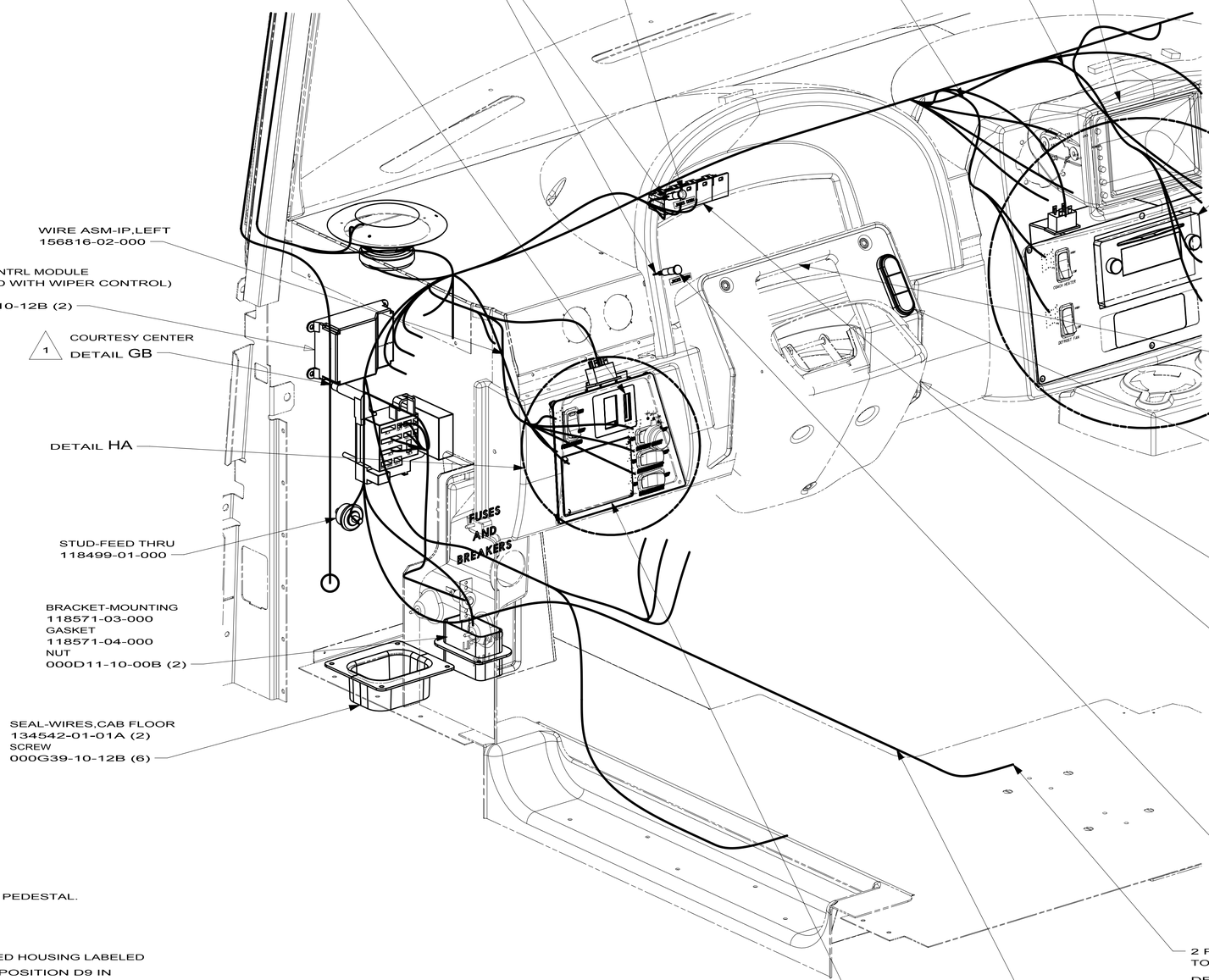

DETAIL GA

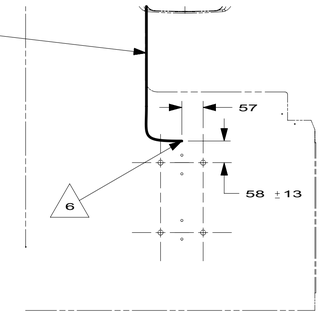

DETAIL GC 64Q

J-SERIES

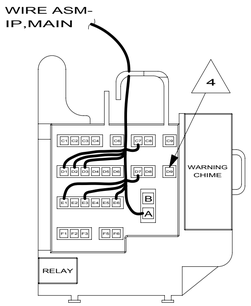

VIEW GB
COURTESY CENTER
(CHASSIS SUPPLIED)
1PS 1PV

1LL	FRTL(FRED) 27,000#-22.5 TIRE
64Q	SEAT PED-6-WAY POWER DRIVER
611	WTR HTR-AUX AUTO/MOTORAID
60M	HYDRAULIC LEVEL JACKS-AUTO
57M	LAMPS-FOG
28X	MIRRORS-EXTERIOR W/DEFROST
1B2	WTR HTR-10GAL/ELEC/LP/MTRAID
1PV	WORKHORSE 24,000#-22.5 TIRE
1PS	WORKHORSE 22,000#-22.5 TIRE
265	CODES/STANDARDS-CSA/CMVSS
1B1	CODES/STANDARDS USA

1B1 265

NOTES:

6. LEAVE 675±50MM OF WIRE PEDESTAL.
5. 2009 FORD CHASSIS.
4. CONNECT CHASSIS SUPPLIED HOUSING LABELED "SEAT BELT BYPASS" TO POSITION D9 IN CONVENIENCE CENTER.
3. WIRING FROM LEVELING SYSTEM. SEE LEVELING SYSTEM INSTL. FOR ADDITIONAL INFORMATION.
2. CONNECT POSITIVE WIRE TO TERMINAL MARKED WITH A "+".
1. CHASSIS SUPPLIED

FOR ELECTRICAL TORQUE SPECIFICATIONS SEE DWG NO. 128783-01-000

X-X FOR ELECTRICAL CALLOUTS SEE DWG NO. 121339-01-000

FIRST USED
10 D,J,K-SER

DO NOT SCALE DRAWING

TITLE:
WIRING INSTL-FRONT END

SHEET 7 | PART NO 169925 | REV

12/29/2009

DWG NO 169925

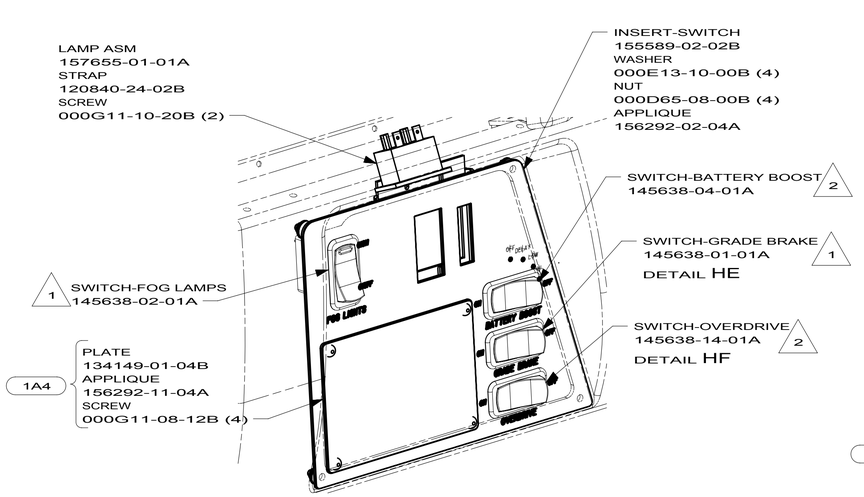

DETAIL HA 1PS 1PV

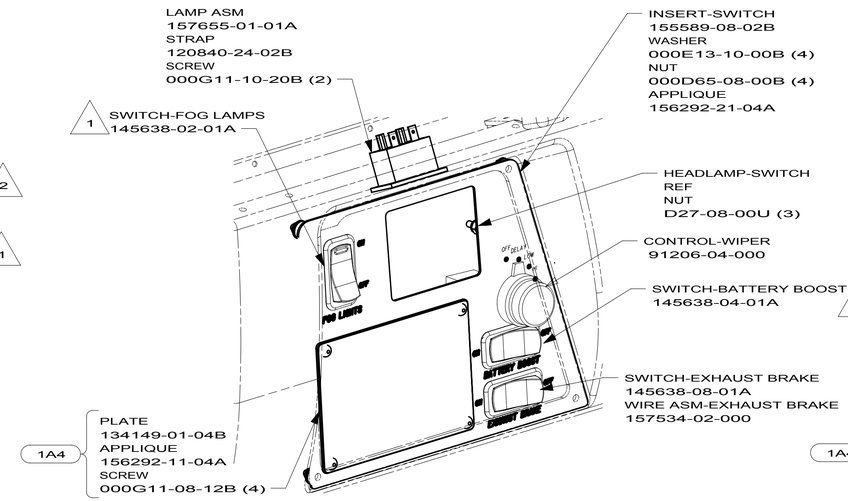

DETAIL HA 1LL

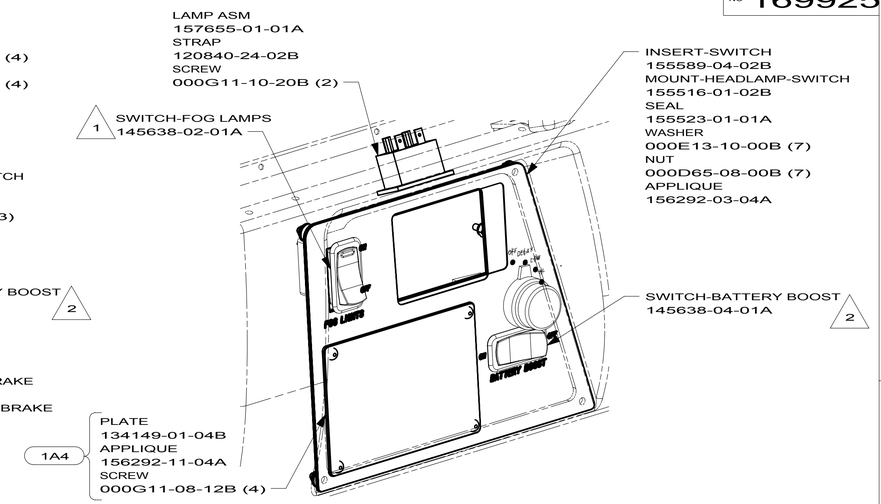

DETAIL HA 16L 16Z

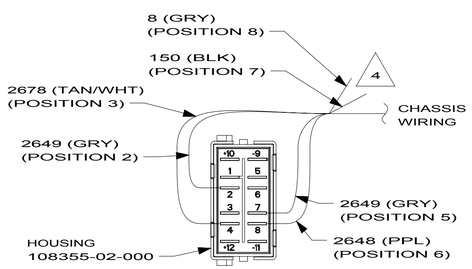

DETAIL HF
(OVERDRIVE
SWITCH)
5

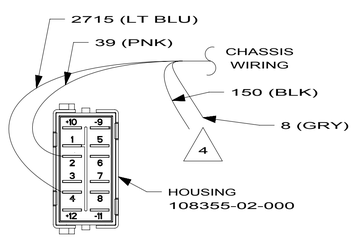

DETAIL HE
(GRADE BRAKE
SWITCH)

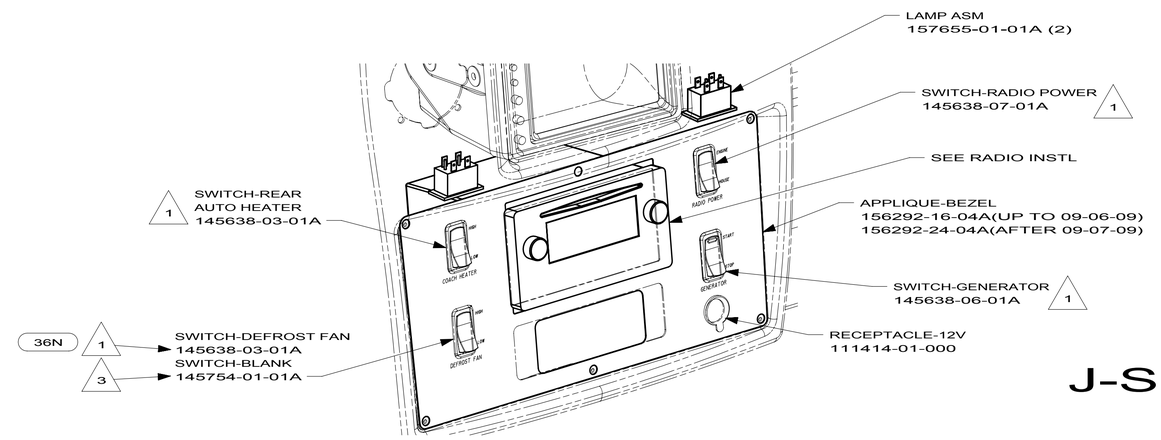

DETAIL HB

J-SERIES

1LL	FRTL(FRED) 27,000#-22.5 TIRE
36N	FANS-DEFROSTER, AUXILIARY
1A4	LEVELING JACK WITHOUT
1PV	WORKHORSE 24,000#-22.5 TIRE
1PS	WORKHORSE 22,000#-22.5 TIRE
16Z	FORD 24,000#-22.5 ALUM WHEEL
16L	FORD 22,000#-22.5 AL WHL
265	CODES/STANDARDS-CSA/CMVSS
1B1	CODES/STANDARDS USA

7 WITH SWITCH INSTALLED THIS SIDE OF SWITCH WILL FACE LEFT SIDEWALL.

6 DETAIL IS LOOKING AT SWITCH FROM THE BACK SIDE OF SWITCH AS ITS INSTALLED.

5 POSITIONS NOTED IN PARENTHESIS ARE LOCATIONS IN WORKHORSE SUPPLIED HOUSING.

4 REMOVE TERMINALS & TAPE BACK TO LOOM.

3 WITHOUT 36N

2 SEE DETAIL HC FOR ORIENTATION.

1 SEE DETAIL HD FOR ORIENTATION.

NOTES:

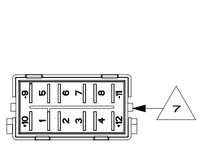

DETAIL HC
(MOUNTED
HORIZONTALLY)
6

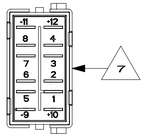

DETAIL HC
(MOUNTED
VERTICALLY)
6

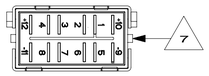

DETAIL HD
(MOUNTED
HORIZONTALLY)
6

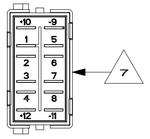

DETAIL HD
(MOUNTED
VERTICALLY)
6

FOR ELECTRICAL TORQUE SPECIFICATIONS SEE DWG NO. 128783-01-000

X-X FOR ELECTRICAL CALLOUTS SEE DWG NO. 121339-01-000

1B1 265

FIRST USED 10 D,J,K-SER

DO NOT SCALE DRAWING

TITLE: WIRING INSTL-FRONT END

SHEET 8 PART NO 169925 REV

12/29/2009

DWG NO 169925

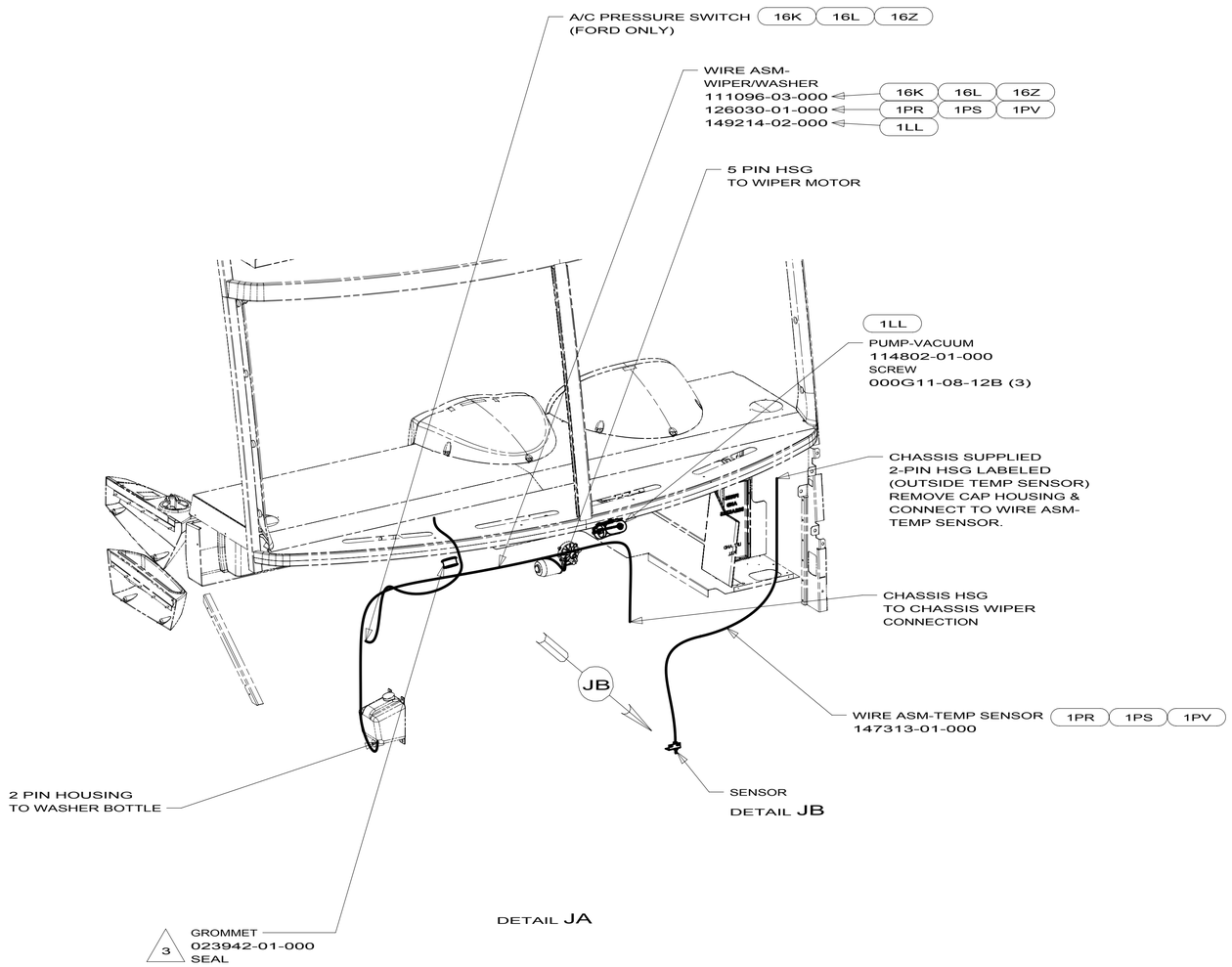

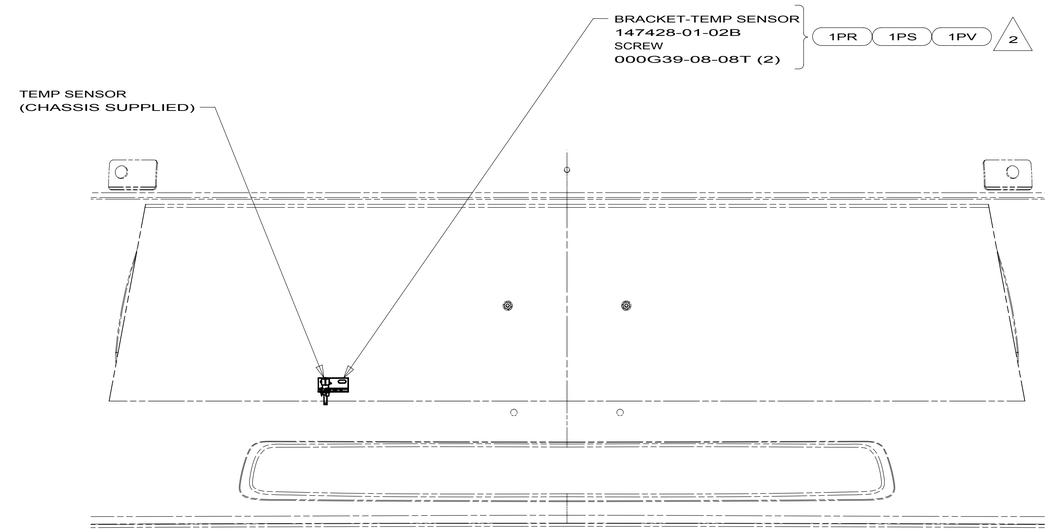

DETAIL JB

D,J-SERIES

1PV	WORKHORSE 24,000#-22.5 TIRE
1PS	WORKHORSE 22,000#-22.5 TIRE
1PR	WORKHORSE 22,000#-19.5 TIRE
1LL	FRTL(FRED) 27,000#-22.5 TIRE
16Z	FORD 24,000#-22.5 ALUM WHEEL
16L	FORD 22,000#-22.5 AL WHL
16K	FORD CHASSIS 22,000
265	CODES/STANDARDS-CSA/CMVSS
1B1	CODES/STANDARDS USA

NOTES:

1. GATHER ALL EXCESS WIRE AFTER MAKING ALL CONNECTIONS. BUNDLEAND SECURE WITH WIRE TIE 008343-01-000 OR 093147-01-000.

2. MOUNT SENSOR OR SENSOR BRACKET TO HORIZONTAL TUBE ON FIBERGLASS AS SHOWN.

3. ROUTE WIRES THROUGH HOLE IN STEEL.

FOR ELECTRICAL TORQUE SPECIFICATIONS SEE DWG NO. 128783-01-000

X-X FOR ELECTRICAL CALLOUTS SEE DWG NO. 121339-01-000

1B1 265

FIRST USED 10 D,J,K-SER

DO NOT SCALE DRAWING

TITLE: WIRING INSTL-FRONT END

SHEET 9 | PART NO 169925 | REV

12/29/2009

091206-04-000

KEY	PART NUMBER	U/M	DESCRIPTION	VENDOR NO.
	091206-02-700	EA	KNOB-INNER	66C-00019
	091206-02-701	EA	KNOB-OUTER	66C-00020
	091206-04-700	EA	SWITCH ASSEM. ONLY	250-6623
	102362-03-700	EA	MODULE-WIPER CONT., DYNAMIC	66D-00093

COPYRIGHT © 2009 WINNEBAGO INDUSTRIES INC.

DWG NO 169847

J-SERIES
P-SERIES
R-SERIES
169847-04

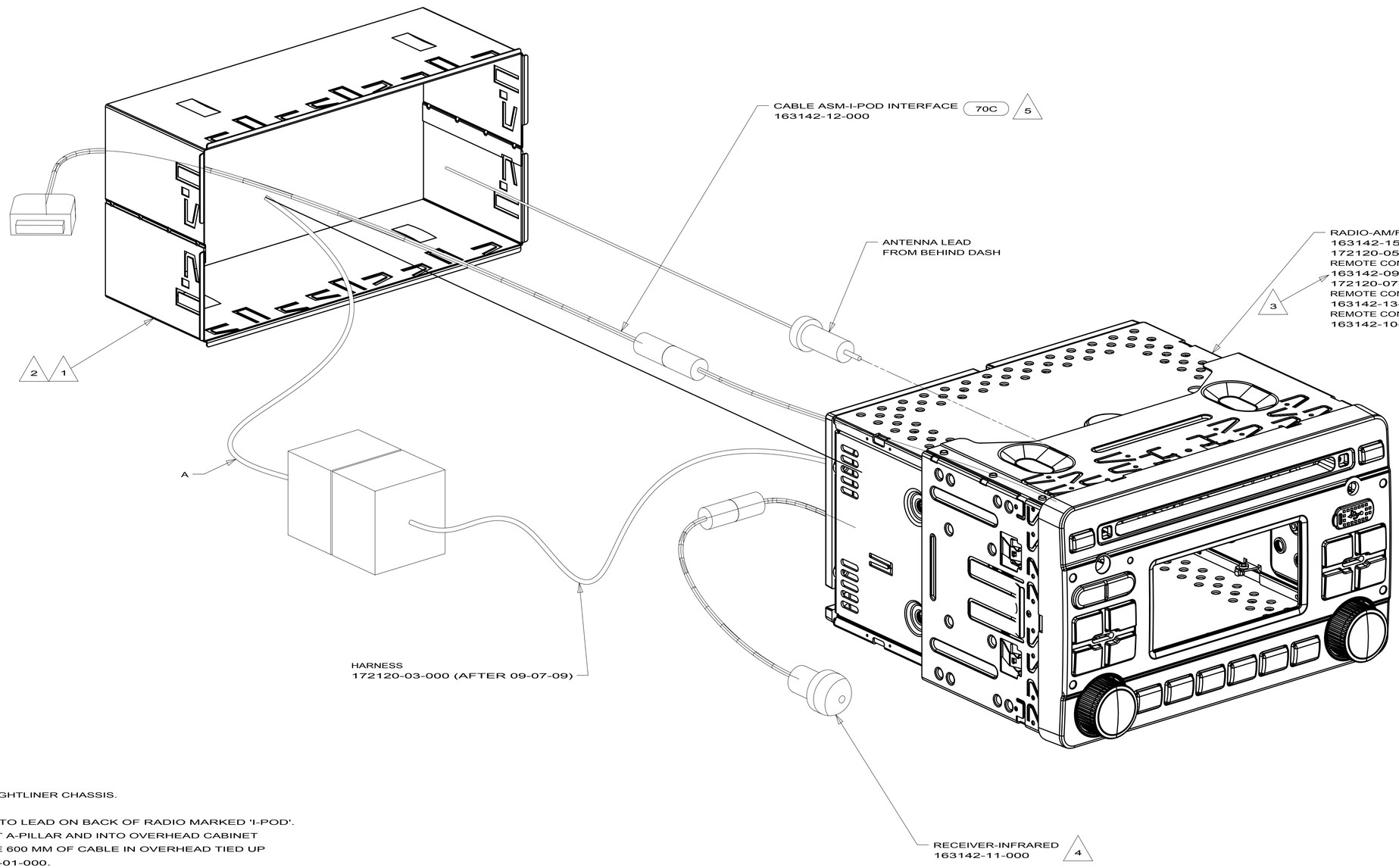

NOTES:

7. FORD CHASSIS.
6. WORKHORSE AND FREIGHTLINER CHASSIS.
5. PLUG I-POD CABLE INTO LEAD ON BACK OF RADIO MARKED 'I-POD'. ROUTE CABLE UP LEFT A-PILLAR AND INTO OVERHEAD CABINET ABOVE DRIVER. LEAVE 600 MM OF CABLE IN OVERHEAD TIED UP WITH WIRE TIE 8343-01-000.
4. INSTALL PER DRAWING 170205.
3. TO BE SUPPLIED LOOSE IN WINNEBAGO OWNERS CASE.
2. BEND TABS ON ALL 4 SIDES TO SECURE MOUNTING BRACKET TO DASH OPENING.
1. SUPPLIED WITH RADIO.

70C RADIO - SATELLITE
19V RADIO-AM/FM STEREO CD PLAYER
265 CODES/STANDARDS-CSA/CMVSS
1B1 CODES/STANDARDS USA

1B1 265 19V

FOR ELECTRICAL TORQUE SPECIFICATIONS SEE DWG NO. 128783-01-000

X-X FOR ELECTRICAL CALLOUTS SEE DWG NO. 121339-01-000

FIRST USED 10 J,P,R-SERIES

DO NOT SCALE DRAWING

TITLE: RADIO INSTL

SHEET 4 | PART NO 169847 | REV

11/3/2009

DRAWING NO.	MODEL	SHEETS
169917-01	J32H	1,6A,6B,6C
169917-02	J35Z	2,7A,7B,9
169917-03	J37F	3,5A,5B,5C,8A,8B
169917-04	J38N	4,11A,11B,11C
169917-05	J35P	10,11A,11B,11C

RELEASE	REV	DATE	DWG NO
	A		169917

REV	ZONE	REVISION RECORD	DATE	DFTR-ORIG

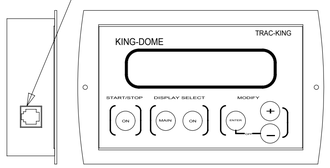

DETAIL AA (48R) △2

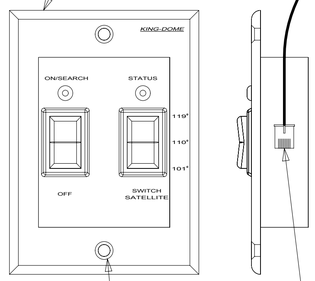

SWITCH-CONTROL
163598-02-000

SCREW
000G12-06-12U

CABLE ASM-SATELLITE
CONTROL FROM ROOF ASM

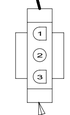

3-PIN HOUSING
CONNECTS TO WIRE
WIRE ASM-ROOF

RJ-11 CONNECTOR IS TO
BE INSERTED INTO CONNECTOR
ON CONTROL SWITCH

DETAIL AA (78K)

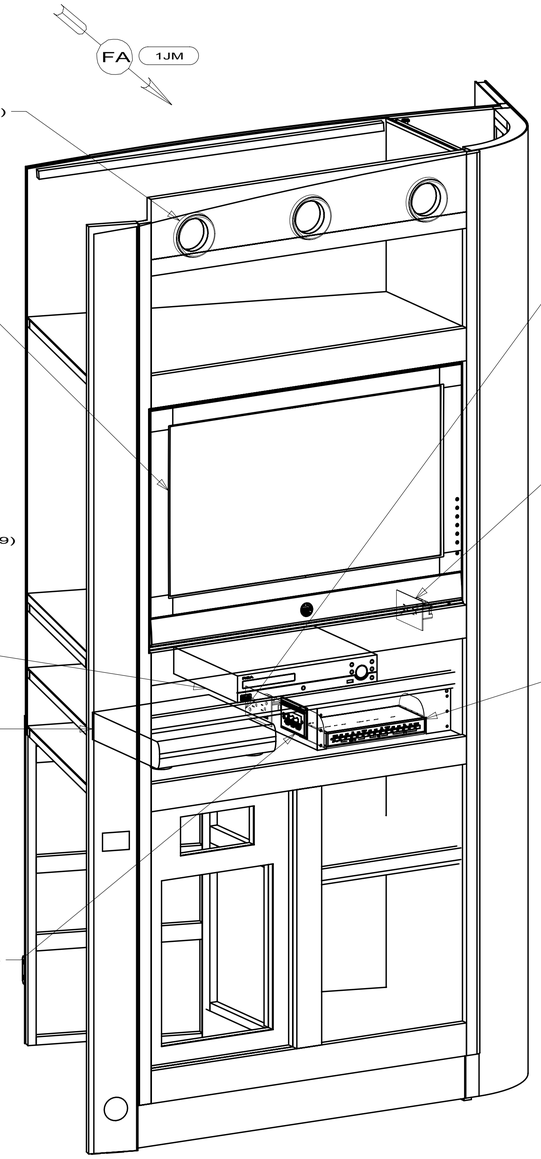

(1JM) SPEAKER
160868-01-000 (3)
GRILLE
160868-02-01A (3)
SCREW
000G11-08-08B (12)

(42K) TV-32",FLAT PANEL LCD
169151-02-000(UP TO 05-03-09)
173556-01-000(AFTER 05-04-09)

HOME THEATER SYSTEM (1JM)
164270-01-000(UP TO 05-03-09)
173514-01-000
(AFTER 05-04-09,UP TO 11-29-09)
173514-02-000(AFTER 11-30-09)
WIRE ASM-JUMPER,SPEAKER
153349-08-000(UP TO 05-03-09)
153349-01-000(AFTER 05-04-09)
FASTENER-DUAL LOCK
085774-01-000
085774-02-000

SATELLITE
RECEIVER (REF)

PLATE-WALL
149557-04-02A
SCREW
000G67-10-08B (2)

RECEPTACLE-DOUBLE
172839-01-01A (UP TO 01-24-10)
RECEPTACLE-DOUBLE, FLUSH MOUNT
176149-01-01A (AFTER 01-25-10)
PLATE-COVER
176159-01-01A (AFTER 01-25-10)
LABEL
158542-02-01A (265)

RECEPTACLE-DOUBLE
172839-01-01A (UP TO 01-24-10)
RECEPTACLE-DOUBLE, FLUSH MOUNT
176149-01-01A (AFTER 01-25-10)
PLATE-COVER
176159-01-01A (AFTER 01-25-10)

CONTROL CENTER SWITCHING
142258-01-000
BRACKET-VIDEO SWITCH
156586-01-02B
SCREW
000G11-08-12B (4)

J32H

△1 SWITCH-SATELLITE
DETAIL AA

RECEPTACLE-BLANK
058707-02-000 (UP TO 01-24-10)
RECEPTACLE-BLANK
176158-01-01A (AFTER 01-25-10)
(DETAIL AB)

RECEPTACLE-DOUBLE
172839-01-01A (UP TO 01-24-10)
RECEPTACLE-DOUBLE, FLUSH MOUNT
176149-01-01A (AFTER 01-25-10)
PLATE-COVER
176159-01-01A (AFTER 01-25-10)

(265) LABEL
158542-02-01A

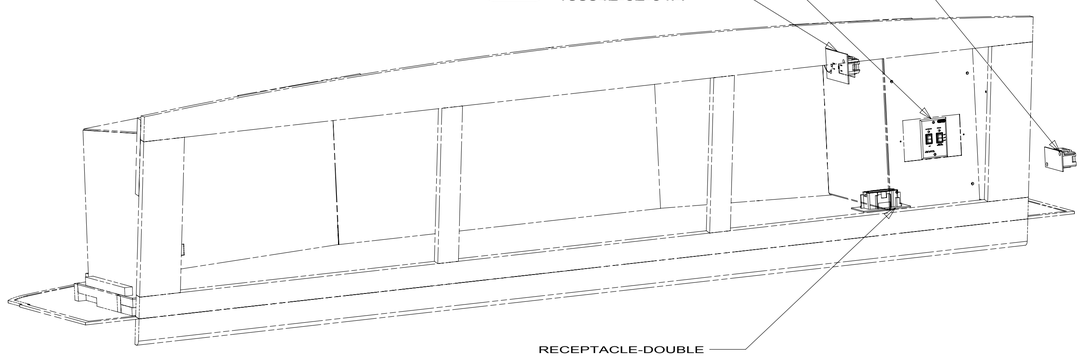

RECEPTACLE-DOUBLE
172839-01-01A (UP TO 01-24-10)
RECEPTACLE-DOUBLE, FLUSH MOUNT
176149-01-01A (AFTER 01-25-10)
PLATE-COVER
176159-01-01A (AFTER 01-25-10)

(48R) SAT TV SYSTEM IN-MOTION
(42K) TV-32" COLOR,STEREO W/REMOTE
(78K) SATELLITE DISH-AUTOMATIC
(25F) DIGITAL VIDEO DISC PLAYER
(1JM) HOME THEATER SOUND SYSTEM
(1JF) HOME THEATER SYS-WITHOUT
(79H) ENTERTAINMENT CTR-INTERIOR
(265) CODES/STANDARDS-CSA/CMVSS
(1B1) CODES/STANDARDS USA

(1B1) (265) (79H)

△2 PARTS ARE SUPPLIED WITH SATELLITE KIT 154474-02-000.

△1 SEE ROOF ASM FOR ADDITIONAL INFORMATION.

NOTES:

RCP-B OVHD
(PUR-2)

FROM RCP-OVHD ---------- [ ] ---------- TO RCP FRONT RH
(WIRE IN SIDEWALL)

DETAIL AB

X-X

FOR
ELECTRICAL
CALLOUTS
SEE DWG NO.
121339-01-000

FOR ELECTRICAL
TORQUE
SPECIFICATIONS
SEE DWG NO.
128783-01-000

WINNEBAGO INDUSTRIES

COPYRIGHT 2010
WINNEBAGO
INDUSTRIES, INC.

DFTR	ORIG. DATE
CHKR	ALL DIMENSIONS ARE IN MILLIMETERS
P.E.	
M.E.	FIRST USED
DSNR	10 J-SERIES

UNSPECIFIED TOLERANCES ARE:

WHOLE DIM (X)	±	3
ONE-PLACE (X.X)	±	1.5
TWO-PLACE (X.XX)	±	0.50
ANGLE	±	1°

MATERIAL:

THIRD ANGLE PROJECTION

DO NOT SCALE DRAWING

TITLE:
WIRING INSTL-TV/DVD

SHEET 1 OF 19 | PART NO 169917 | REV

REF: 1

2/6/2010

DWG NO 169917

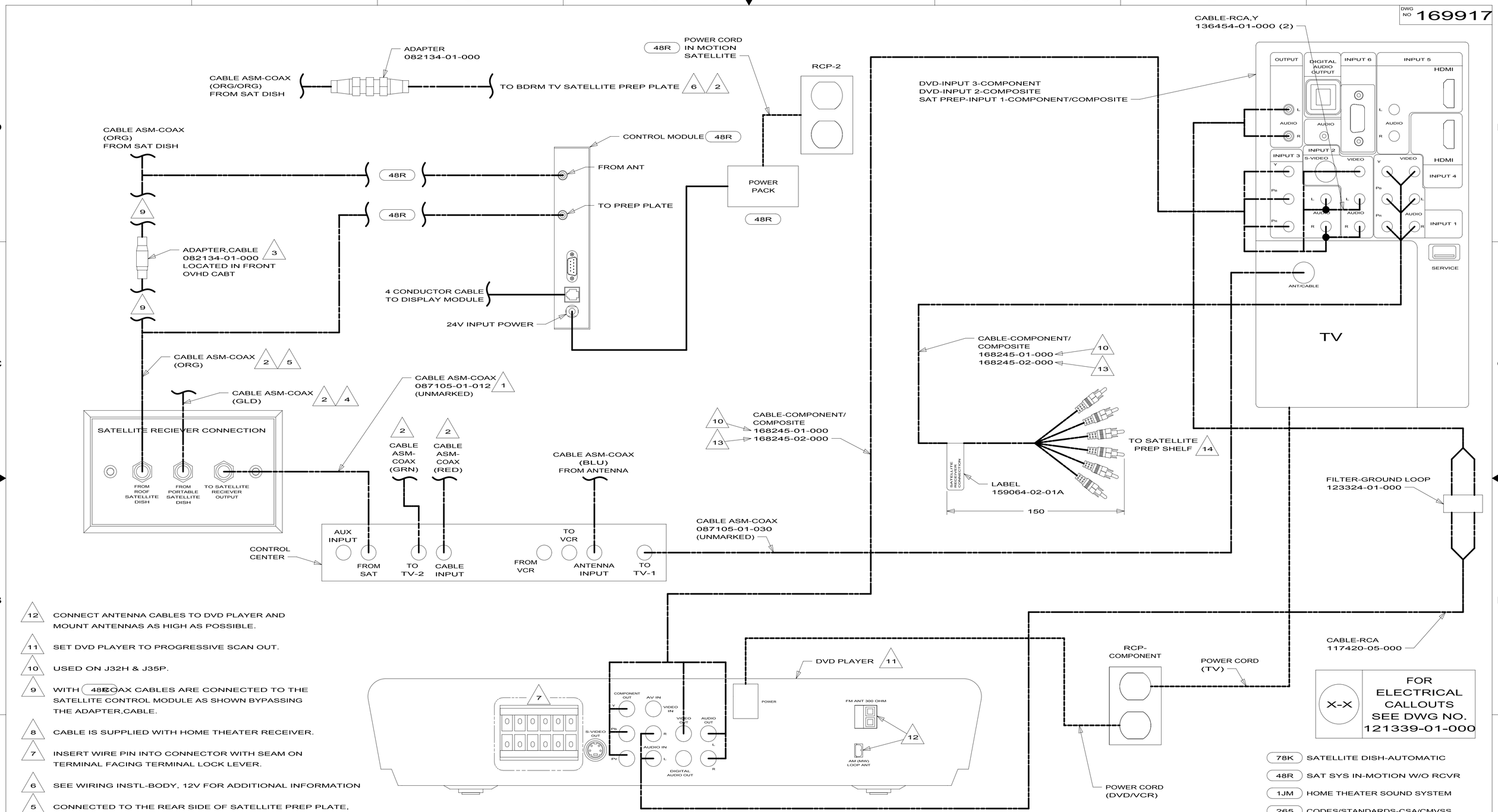

DETAIL FA

12 CONNECT ANTENNA CABLES TO DVD PLAYER AND MOUNT ANTENNAS AS HIGH AS POSSIBLE.

11 SET DVD PLAYER TO PROGRESSIVE SCAN OUT.

10 USED ON J32H & J35P.

9 WITH 48R COAX CABLES ARE CONNECTED TO THE SATELLITE CONTROL MODULE AS SHOWN BYPASSING THE ADAPTER,CABLE.

8 CABLE IS SUPPLIED WITH HOME THEATER RECEIVER.

7 INSERT WIRE PIN INTO CONNECTOR WITH SEAM ON TERMINAL FACING TERMINAL LOCK LEVER.

6 SEE WIRING INSTL-BODY, 12V FOR ADDITIONAL INFORMATION

5 CONNECTED TO THE REAR SIDE OF SATELLITE PREP PLATE, CONNECTION LABELED 'FROM ROOF SATELLITE DISH.'

4 CONNECTED TO THE REAR SIDE OF SATELLITE PREP PLATE, CONNECTION LABELED 'FROM PORTABLE SATELLITE DISH.'

3 NOT USED WITH 48R

2 CABLE ROUTED IN ROOF OR THROUGH WIRE ASM-COACH.

1 CONNECTED TO THE REAR SIDE OF SATELLITE PREP PLATE, CONNECTION LABELED 'TO SATELLITE RECEIVER OUTPUT.'

NOTES:

14 ROUTE CABLE TO LEFT OVHD CABINET AND COIL EXCESS NEXT TO SATELLITE PREP PLATE.

13 USED ON J38N.

J32H
(UP TO 05-03-09)

FOR ELECTRICAL TORQUE SPECIFICATIONS SEE DWG NO. 128783-01-000

X-X FOR ELECTRICAL CALLOUTS SEE DWG NO. 121339-01-000

78K	SATELLITE DISH-AUTOMATIC
48R	SAT SYS IN-MOTION W/O RCVR
1JM	HOME THEATER SOUND SYSTEM
265	CODES/STANDARDS-CSA/CMVSS
1B1	CODES/STANDARDS USA

1B1 265 1JM

FIRST USED 10 J-SERIES

DO NOT SCALE DRAWING

TITLE: WIRING INSTL-TV/DVD

SHEET 6A | PART NO 169917 | REV

10/7/2009

DWG NO 169917

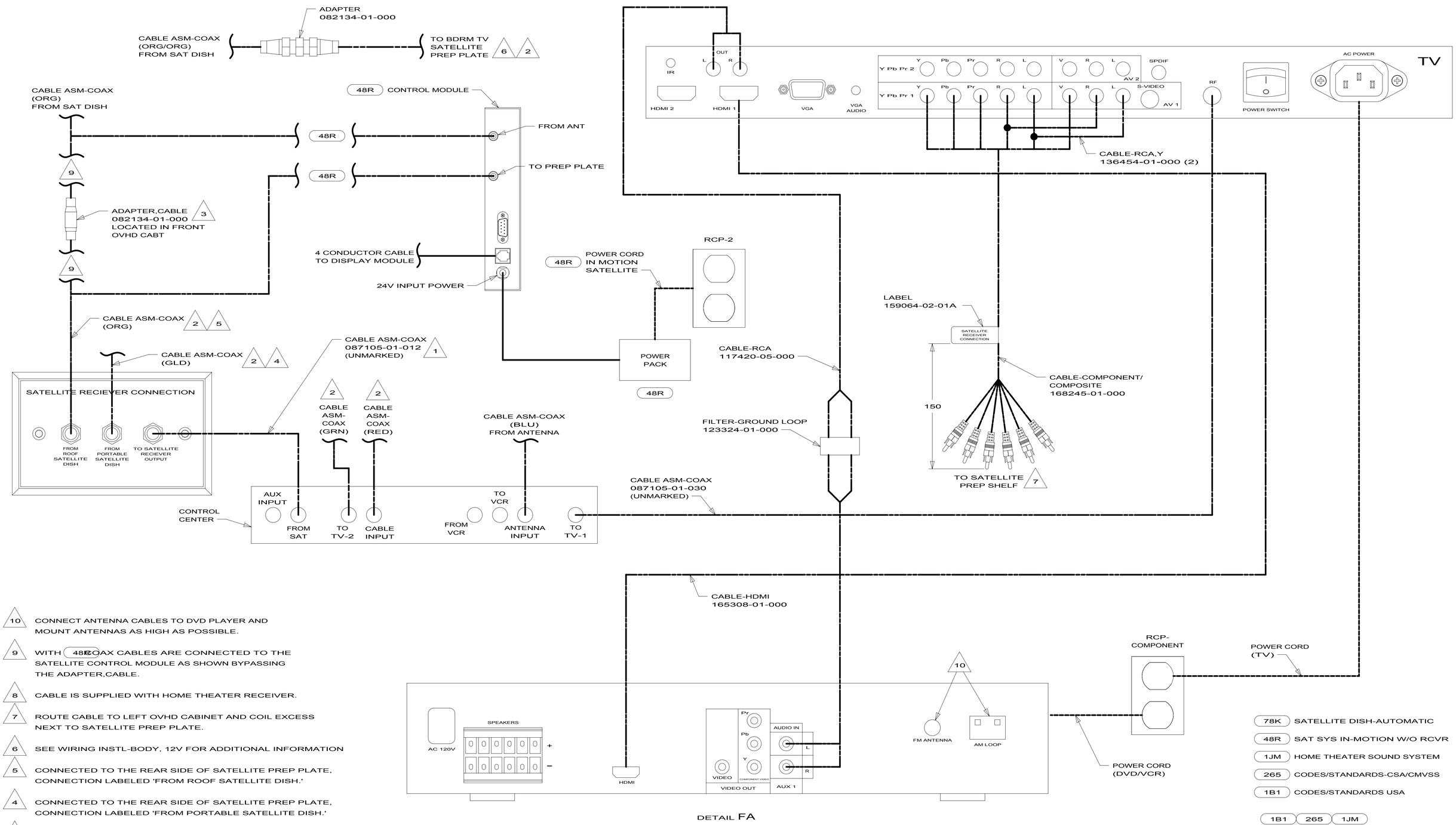

DETAIL FA

10 CONNECT ANTENNA CABLES TO DVD PLAYER AND MOUNT ANTENNAS AS HIGH AS POSSIBLE.

9 WITH 48R COAX CABLES ARE CONNECTED TO THE SATELLITE CONTROL MODULE AS SHOWN BYPASSING THE ADAPTER,CABLE.

8 CABLE IS SUPPLIED WITH HOME THEATER RECEIVER.

7 ROUTE CABLE TO LEFT OVHD CABINET AND COIL EXCESS NEXT TO SATELLITE PREP PLATE.

6 SEE WIRING INSTL-BODY, 12V FOR ADDITIONAL INFORMATION

5 CONNECTED TO THE REAR SIDE OF SATELLITE PREP PLATE, CONNECTION LABELED 'FROM ROOF SATELLITE DISH.'

4 CONNECTED TO THE REAR SIDE OF SATELLITE PREP PLATE, CONNECTION LABELED 'FROM PORTABLE SATELLITE DISH.'

3 NOT USED WITH 48R

2 CABLE ROUTED IN ROOF OR THROUGH WIRE ASM-COACH.

1 CONNECTED TO THE REAR SIDE OF SATELLITE PREP PLATE, CONNECTION LABELED 'TO SATELLITE RECEIVER OUTPUT.'

NOTES:

78K SATELLITE DISH-AUTOMATIC
48R SAT SYS IN-MOTION W/O RCVR
1JM HOME THEATER SOUND SYSTEM
265 CODES/STANDARDS-CSA/CMVSS
1B1 CODES/STANDARDS USA

1B1 265 1JM

J32H
(AFTER 05-04-09, UP TO 11-29-09)

FOR ELECTRICAL TORQUE SPECIFICATIONS SEE DWG NO. 128783-01-000

X-X FOR ELECTRICAL CALLOUTS SEE DWG NO. 121339-01-000

FIRST USED
10 J-SERIES

DO NOT SCALE DRAWING

TITLE:
WIRING INSTL-TV/DVD

SHEET 6B | PART NO 169917 | REV

10/7/2009

DWG NO 169917

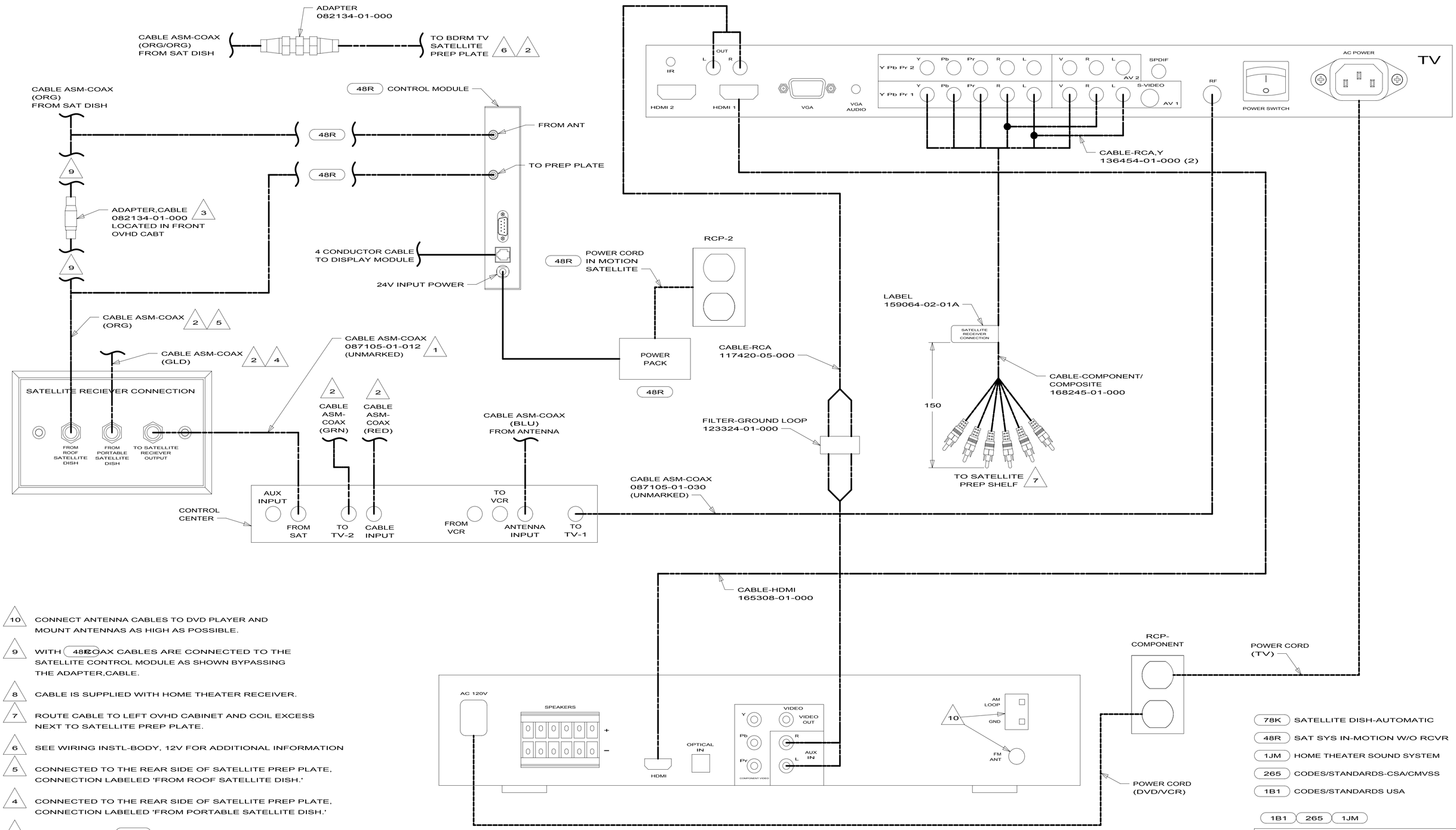

10 CONNECT ANTENNA CABLES TO DVD PLAYER AND MOUNT ANTENNAS AS HIGH AS POSSIBLE.

9 WITH 48R COAX CABLES ARE CONNECTED TO THE SATELLITE CONTROL MODULE AS SHOWN BYPASSING THE ADAPTER,CABLE.

8 CABLE IS SUPPLIED WITH HOME THEATER RECEIVER.

7 ROUTE CABLE TO LEFT OVHD CABINET AND COIL EXCESS NEXT TO SATELLITE PREP PLATE.

6 SEE WIRING INSTL-BODY, 12V FOR ADDITIONAL INFORMATION

5 CONNECTED TO THE REAR SIDE OF SATELLITE PREP PLATE, CONNECTION LABELED 'FROM ROOF SATELLITE DISH.'

4 CONNECTED TO THE REAR SIDE OF SATELLITE PREP PLATE, CONNECTION LABELED 'FROM PORTABLE SATELLITE DISH.'

3 NOT USED WITH 48R

2 CABLE ROUTED IN ROOF OR THROUGH WIRE ASM-COACH.

1 CONNECTED TO THE REAR SIDE OF SATELLITE PREP PLATE, CONNECTION LABELED 'TO SATELLITE RECEIVER OUTPUT.'

NOTES:

J32H
(AFTER 11-30-09)

DETAIL FA

FOR ELECTRICAL TORQUE SPECIFICATIONS SEE DWG NO. 128783-01-000

X-X FOR ELECTRICAL CALLOUTS SEE DWG NO. 121339-01-000

78K SATELLITE DISH-AUTOMATIC
48R SAT SYS IN-MOTION W/O RCVR
1JM HOME THEATER SOUND SYSTEM
265 CODES/STANDARDS-CSA/CMVSS
1B1 CODES/STANDARDS USA

1B1 265 1JM

FIRST USED
10 J-SERIES

DO NOT SCALE DRAWING

TITLE:
WIRING INSTL-TV/DVD

SHEET 6C | PART NO 169917 | REV

12/18/2009

164270-01-000

KEY	PART NUMBER	U/M	DESCRIPTION	VENDOR NO.
	164270-01-700	EA	REMOTE	STS2891REM

COPYRIGHT © 2009 WINNEBAGO INDUSTRIES INC.

168408-01-000

KEY	PART NUMBER	U/M	DESCRIPTION	VENDOR NO.
1	168408-01-700	EA	REMOTE	PSVCDV2007 SVC PK

COPYRIGHT © 2009 WINNEBAGO INDUSTRIES INC.

169151-01-000, 169151-02-000

KEY	PART NUMBER	U/M	DESCRIPTION	VENDOR NO.
	169154-01-700	EA	REMOTE - TV	RRMCGA667WJSA

COPYRIGHT © 2009 WINNEBAGO INDUSTRIES INC.

169154-01-000

KEY	PART NUMBER	U/M	DESCRIPTION	VENDOR NO.
	169154-01-700	EA	REMOTE - TV	RRMCGA667WJSA

COPYRIGHT © 2009 WINNEBAGO INDUSTRIES INC.

171727-01-000

KEY	PART NUMBER	U/M	DESCRIPTION	VENDOR NO.
	171727-01-700	EA	REMOTE	PR7ATSC

COPYRIGHT © 2009 WINNEBAGO INDUSTRIES INC.