DWG NO	----	A	DEFLECTOR
147589-01	J SERIES	1	154181-01-CHT
147589-	D E SERIES	8	-------

RELEASE	REV A	DATE	DWG NO 147589
REV	ZONE	REVISION RECORD	DATE	DFTR-ORIG

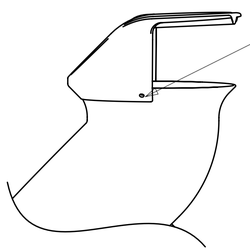

VIEW B

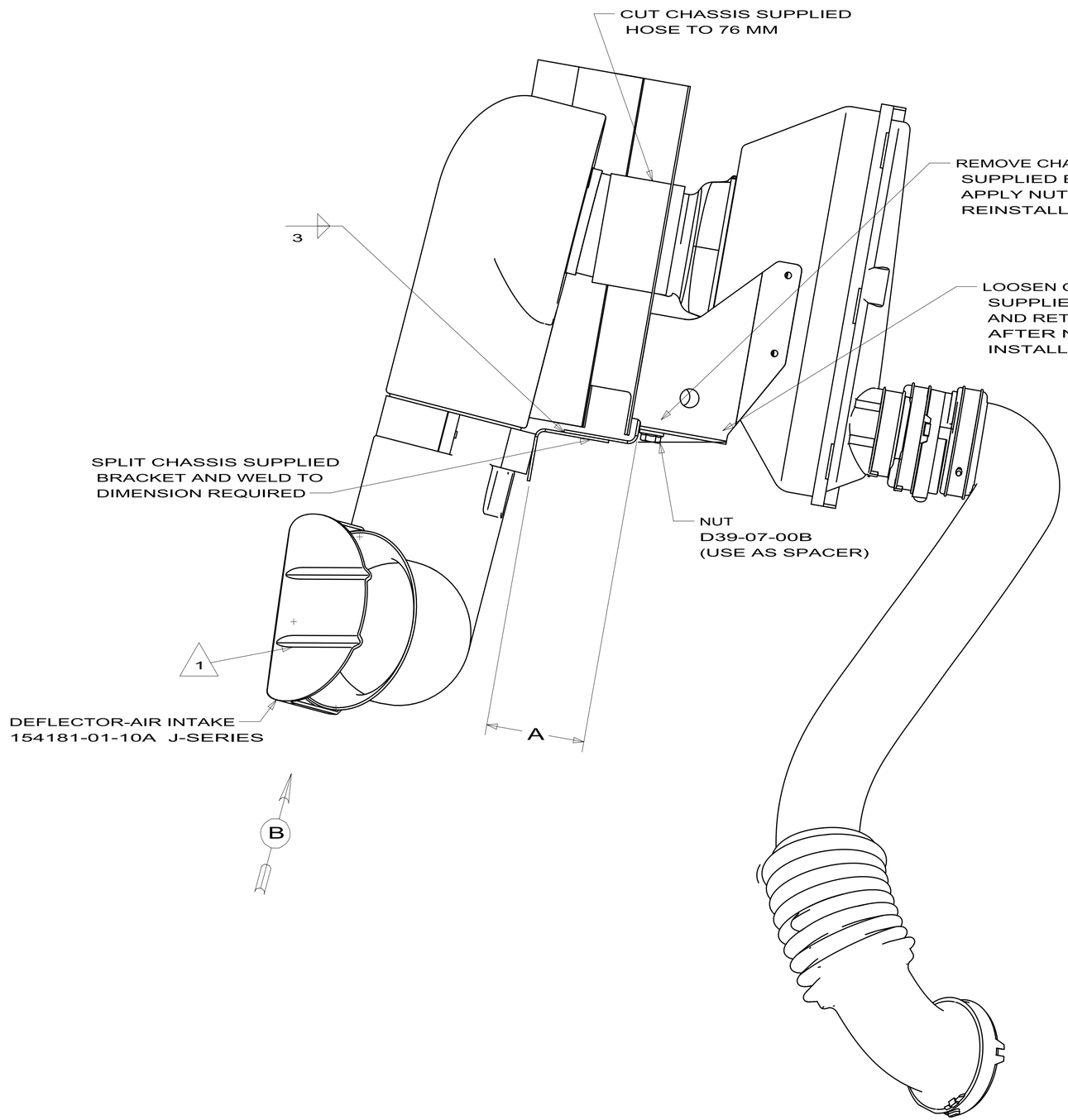

WORKHORSE CHASSIS ONLY

1. ORIENT DEFLECTOR SO THAT GROOVES ARE POSITIONED VERTICALLY WHEN VIEWED FROM FRONT OF VEHICLE.

COPYRIGHT 2009
WINNEBAGO
INDUSTRIES, INC.

DFTR	ORIG. DATE
CHKR	ALL DIMENSIONS ARE IN MILLIMETERS
P.E.	
M.E.	FIRST USED
DSNR	04 F,G-SERIES

UNSPECIFIED TOLERANCES ARE:

WHOLE DIM (X)	:	3
ONE-PLACE (X.X)	:	1.5
TWO-PLACE (X.XX)	:	0.50
ANGLE	:	1°

MATERIAL:

THIRD ANGLE PROJECTION

DO NOT SCALE DRAWING

TITLE: AIR INTAKE INSTL

SHEET 1 OF 1 | PART NO. 147589 | REV

REF: 1

11/6/2009

DWG NO 147430

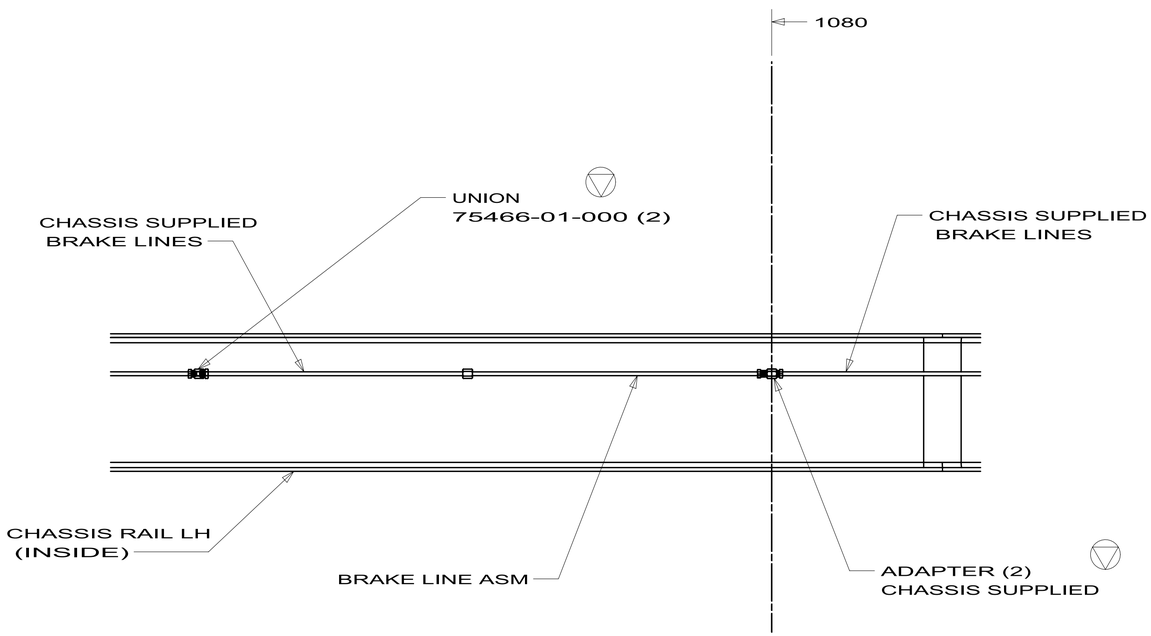

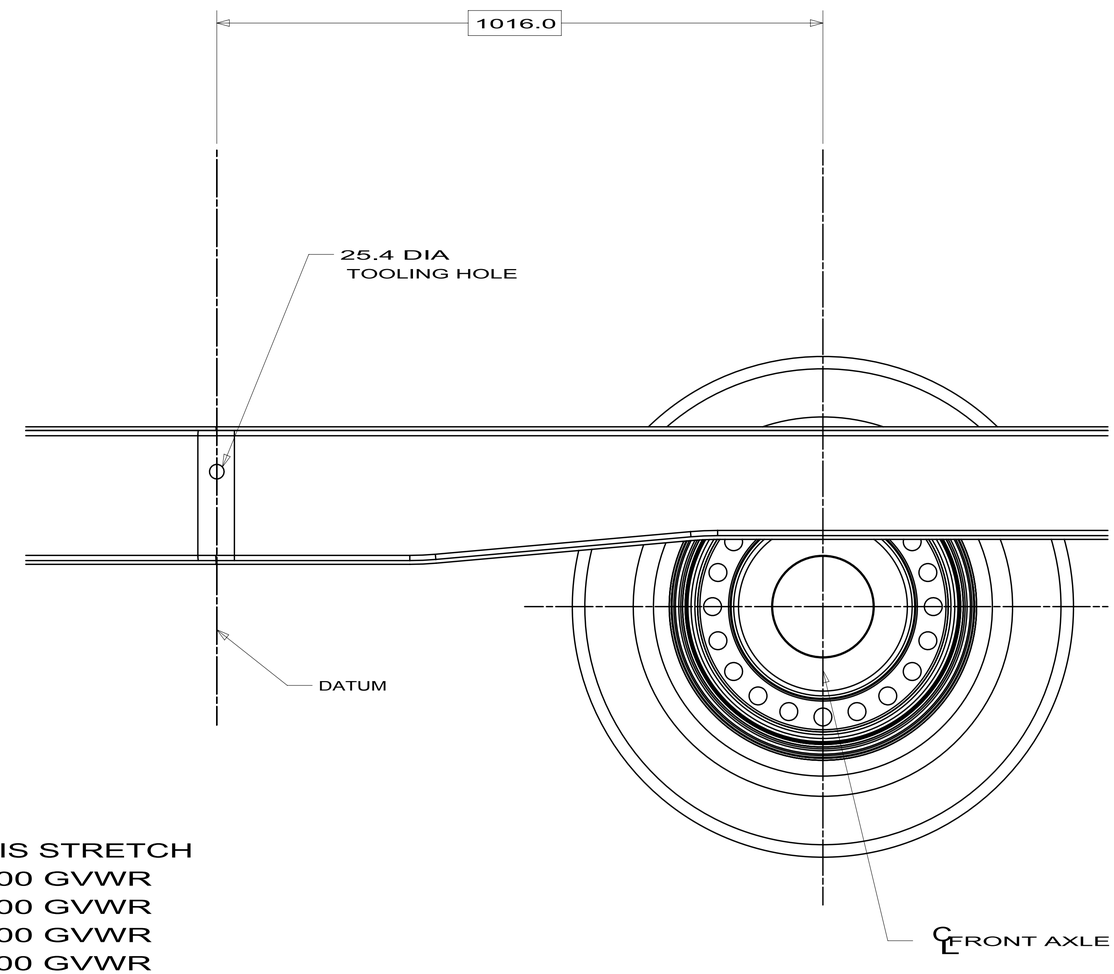

CHASSIS STRETCH
20,500 GVWR
22,000 GVWR
24,000 GVWR
26,000 GVWR

FIRST USED	04 FORD F53
	DO NOT SCALE DRAWING
TITLE:	BRAKE LINE INSTL
SHEET 1	PART NO 147430 REV

DWG NO	----	WHEEL BASE	BRAKE LINE ASM	REAR CONNECTION A	FRONT CONNECTION B	UNIT
147429-01	STRETCH	190" TO 208"	75532-23-000	2800	-----	NOT USED
147429-02	STRETCH	190" TO 220"	75532-01-000	2800	-----	NOT USED
147429-03	STRETCH	208" TO 220"	75532-02-000	3275	-----	J32H
147429-04	STRETCH	208" TO 228"	75532-07-000	3275	-----	J35P,J35Z
147429-05	STRETCH	228" TO 248"	75532-07-000	3750	-----	J37F/38N
147429-06	STRETCH	228" TO 266"	75532-20-000	3750	-----	D37L
147429-07	SHRINK	228" TO 208"	RH=75532-24-000 LH=75532-25-000 △8	3750	840	N/A
147429-08	SHRINK	228" TO 220"	RH=75532-26-000 LH=75532-27-000 △8	3750	840	N/A

RELEASE	REV A	DATE	DWG NO 147429

REV	ZONE	REVISION RECORD	DATE	DFTR-ORIG
B	---	TABS -07 & -08, BRAKE LINE COLUMN	9/15/08	7524-8234

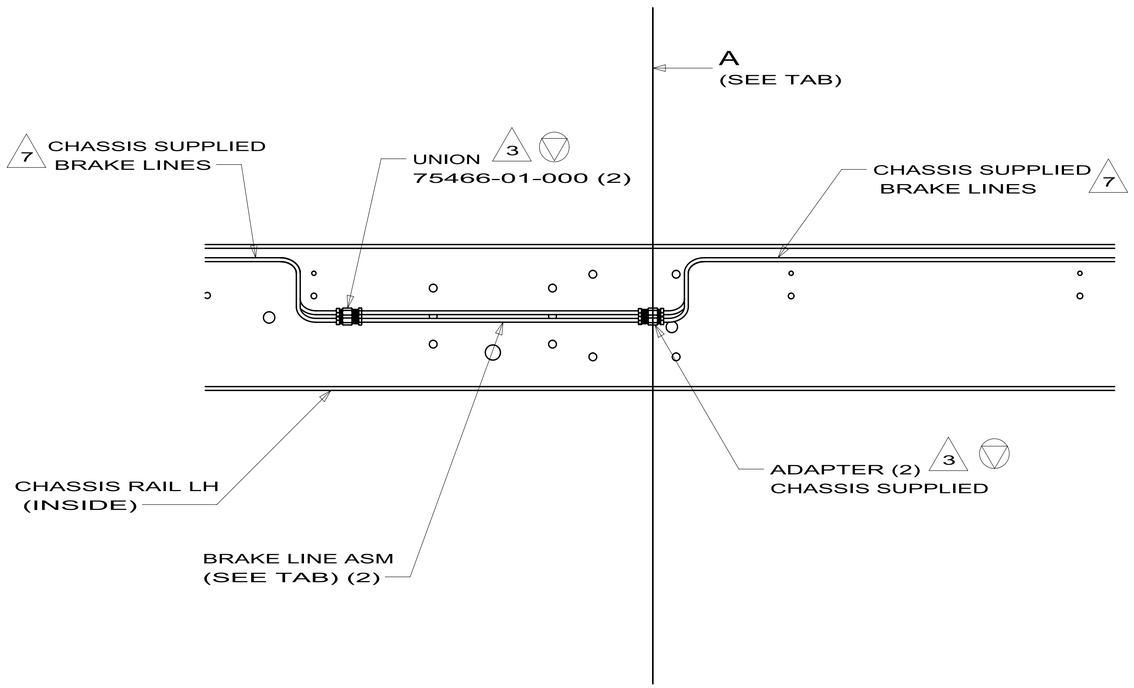

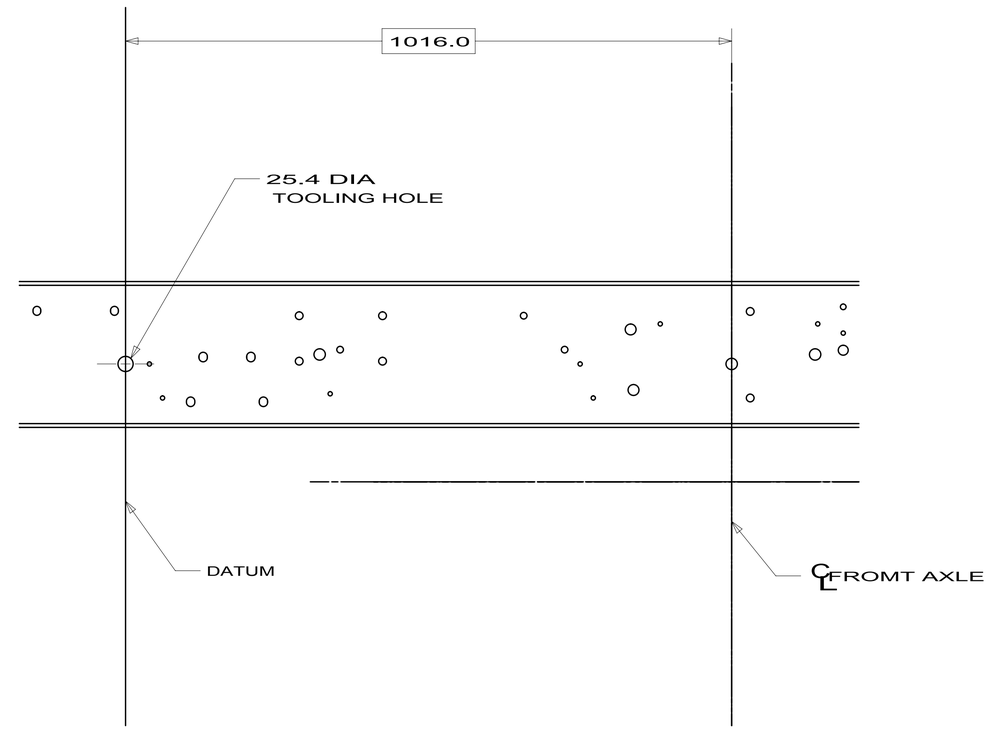

CHASSIS STRETCH

8. REPLACES CHASSIS SUPPLIED LINE BETWEEN A AND B.

7. GOLD NUT TO LEFT REAR BRAKE.
SILVER OR LIGHT GREEN NUT TO RIGHT REAR BRAKE.

6. REFILL BRAKE FLUID RESERVIOR TO CAPACITY USING 73717-01-000.

5. BLEED BRAKE LINES AND CHECK FOR LEAKS AFTER APPLING BRAKES 4 TIMES WITH APPROXIMATELY 150 POUNDS OF PRESSURE. NOTING AND CORRECTING ANY PEDEL BLEED DOWN OR WARNING LIGHT INDICATION.

4. DRAIN, RECOVER, CLEAN-UP AND REMOVE ALL BRAKE FLUID FROM THE AREA PRIOR TO CUTTING OR WELDING. DO NOT REUSE RECOVERED BRAKE FLUID.

3. TORQUE TO 21-27 Nm (14-20 LB/FT).

2. TORQUE TO 14-20 Nm (10-15 LB/FT).

1. FASTEN WITH EXISTING CLAMP WHEN APPLICABLE.

NOTES:

SEE CHART

FOR COLOR VARIATIONS OF THIS PART

COPYRIGHT 2009
WINNEBAGO
INDUSTRIES, INC.

DFTR	ORIG. DATE
CHKR	ALL DIMENSIONS ARE IN MILLIMETERS
P.E.	
M.E.	FIRST USED
DSNR	04 WH W20/22

UNSPECIFIED TOLERANCES ARE:
WHOLE DIM (X) : 3.0
ONE-PLACE (X.X) : 1.5
TWO-PLACE (X.XX) : 0.50
ANGLE : 1°

MATERIAL:

THIRD ANGLE PROJECTION

DO NOT SCALE DRAWING

TITLE: BRAKE LINE INSTL

SHEET 1 OF 1 | PART NO 147429 | REV

REF: 1

DWG NO	FRNT END/CHAS	RAIL ASM	
170801-01	164504-03-CHT	170801-11	16L
170801-02	164623-03-CHT	170801-12	1PS
170801-03	168874-01-CHT	170801-10	1LI

RELEASE	REV	DATE	DWG NO 170801
	A		

REV	ZONE	REVISION RECORD	DATE	DFTR-ORIG

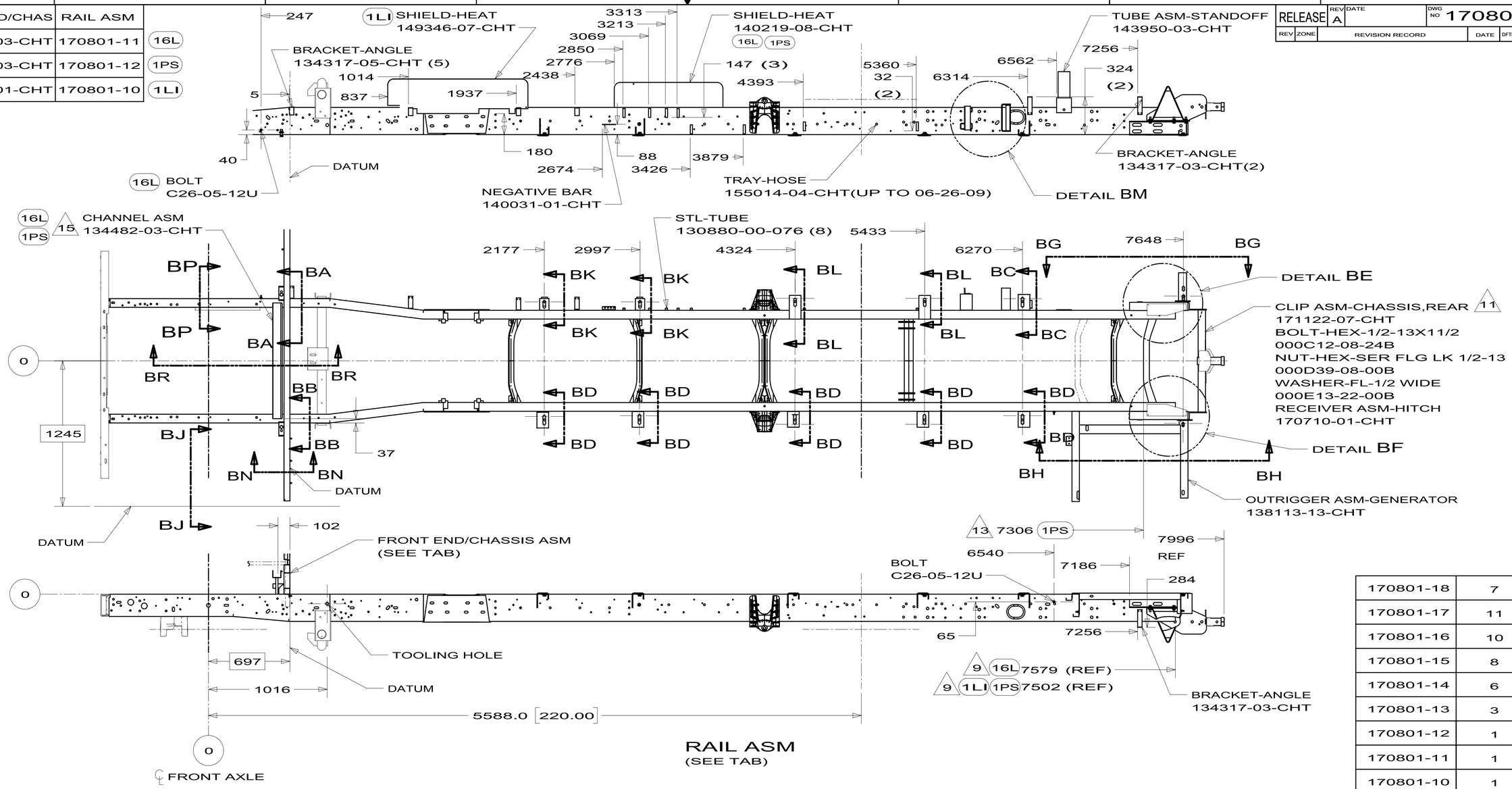

RAIL ASM
(SEE TAB)

TAB	SHEET
170801-18	7
170801-17	11
170801-16	10
170801-15	8
170801-14	6
170801-13	3
170801-12	1
170801-11	1
170801-10	1

NOTES:

11. ADD SHIM 136538-01-CHT (A/R) BETWEEN HITCH AND FRAME TO A MAXIMUM OF 10 MM TO ALIGN HITCH WITH BUMPER: RE-TORQUE BOLTS TO SPECIFICATIONS.
10. REMOVE BEFORE INSTALLATION OF COMPARTMENT.
9. TRIM FRAME RAILS TO THIS DIMENSION.
8. INSTALL AFTER SUB FLOOR PANELS.
7. SECTION OF TUBE TO BE REMOVED.
6. WELD PER ES0063, UNLESS OTHERWISE SPECIFIED.
5. USE SHIMS AS REQUIRED.
4. TORQUE TO 140 ± 14 FT-LBS.
3. SEAL ALL JOINTS OF COMPARTMENTS AND CLOSEOUT PANELS WITH SEALANT 53766-01-000.
2. CLEAN AND E-COAT ALL PIECE PARTS PRIOR TO ASSEMBLY.
1. CLEAN AND PAINT WITH UNDERCOATING 100053-03-000.

22. INSTALL ON THE LINE BEFORE COMPARTMENTS ARE INSTALLED.
21. HOLES 2537.0 FROM END OF TUBE TO FRONT OF UNIT.
20. TORQUE BOLTS TO 70-85 Nm (52-62 FT-LBS.)
19. USE LOCTITE 62917-02-000 ON ALL THREADS WHEN INSTALLING BOLTS.
18. APPLY 2 STRIPS OF TAPE 69640-32-000 (585 LONG.)
17. APPLY UNDERCOATING 100053-03-000 TO WHEELWELL AREA.
16. USE GIMP 113452-01-000 AS REQUIRED,(1800mm).
15. MAINTAIN 25mm GAP FROM HOSE TO CHANNEL.
14. INSTALL DOWN STAIRS.
13. MOVE CROSSMEMBER TO THIS POSITION AND WELD INTO PLACE.
12. TO BE INSTALLED AFTER STEP ASSEMBLY.

1LI FRTL(FRED)22K-300HP 22.5TIRE
1PS WORKHORSE 22,000#-22.5 TIRE
16L FORD 22,000#-22.5 TIRE
1B2 WTR HTR-10GAL/ELEC/LP/MTRAID
611 WTR HTR-6GAL/AUX AUTO/MOTORAID

SEE CHART
FOR COLOR VARIATIONS OF THIS PART

WINNEBAGO INDUSTRIES

COPYRIGHT 2010
WINNEBAGO
INDUSTRIES, INC.

DFTR | ORIG. DATE
CHKR | ALL DIMENSIONS ARE IN MILLIMETERS
P.E.
M.E. | FIRST USED 10 J32H
DSNR

UNSPECIFIED TOLERANCES ARE:
WHOLE DIM (X) : 3
ONE-PLACE (X.X) : 1.5
TWO-PLACE (X.XX) : 0.50
ANGLE : 1°

MATERIAL:

THIRD ANGLE PROJECTION

DO NOT SCALE DRAWING

TITLE: FRAME ASM-CHASSIS

SHEET 1 OF 11 | PART NO 170801 | REV

REF: 1

2/17/2010

DWG NO 170801

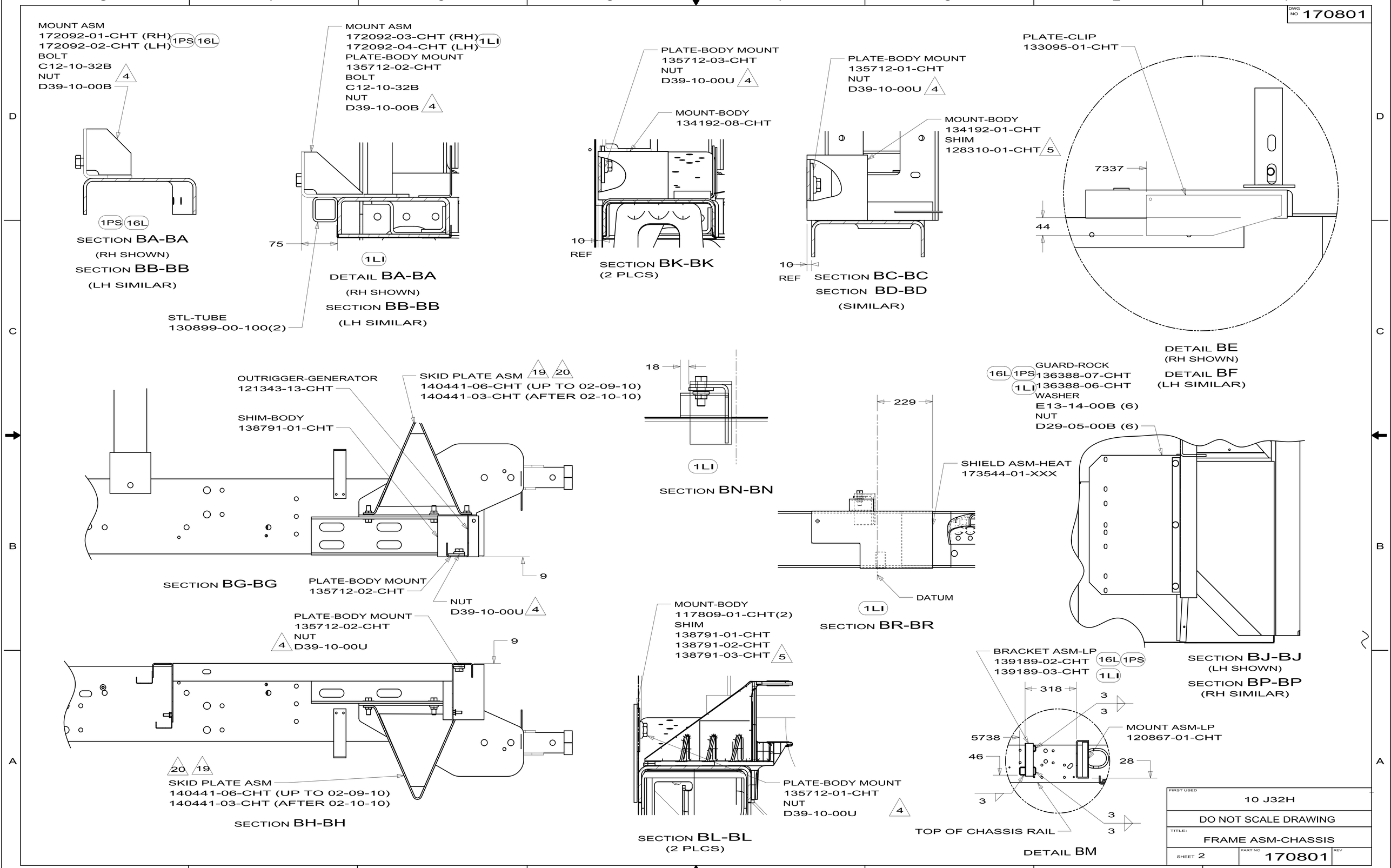

FIRST USED	10 J32H
DO NOT SCALE DRAWING	
TITLE:	FRAME ASM-CHASSIS
SHEET 2	PART NO 170801 REV

2/17/2010

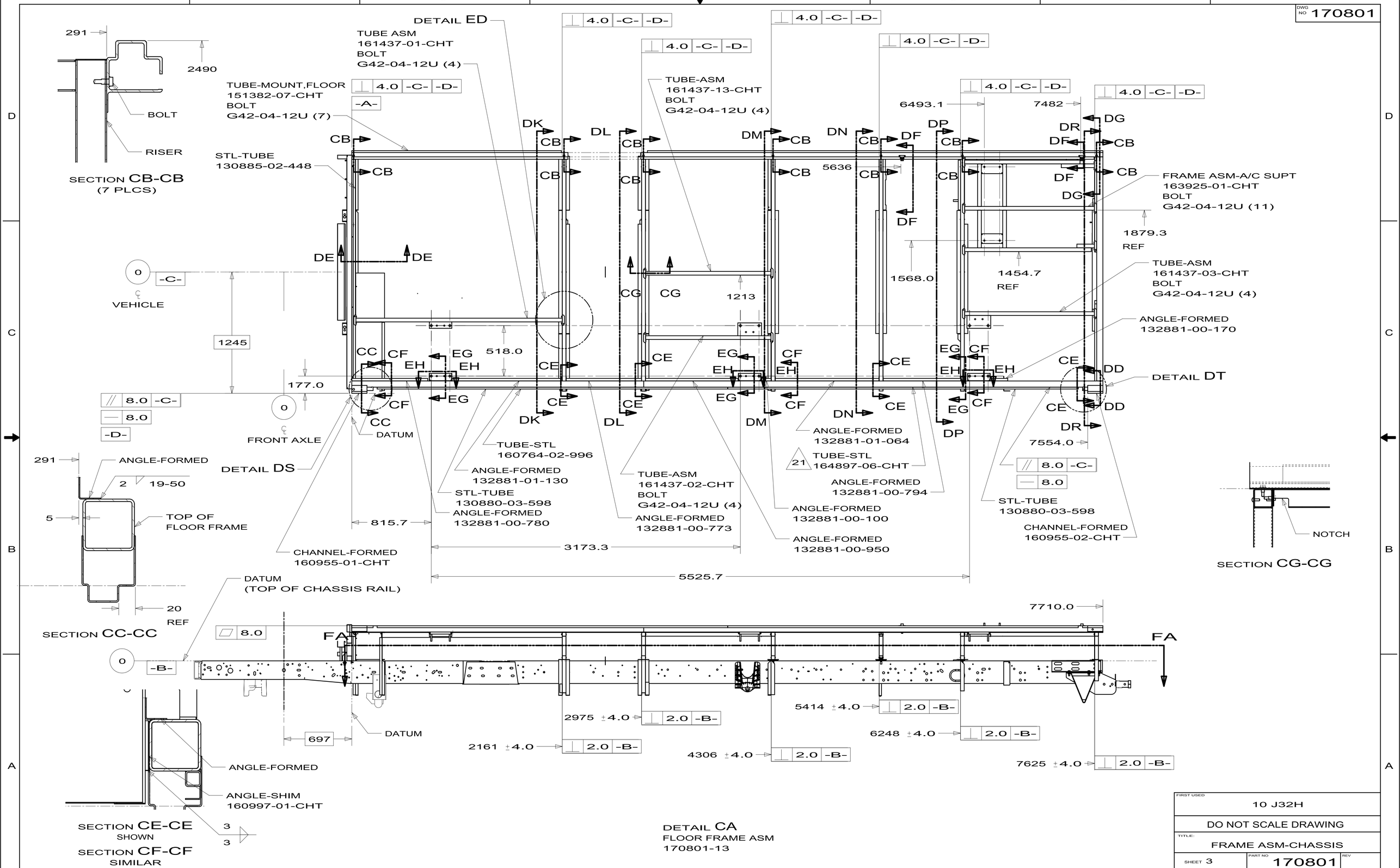
DWG NO 170801
DETAIL ED
TUBE ASM
161437-01-CHT
BOLT
G42-04-12U (4)
TUBE-MOUNT,FLOOR
151382-07-CHT
BOLT
G42-04-12U (7)
STL-TUBE
130885-02-448
TUBE-ASM
161437-13-CHT
BOLT
G42-04-12U (4)
FRAME ASM-A/C SUPT
163925-01-CHT
BOLT
G42-04-12U (11)
TUBE-ASM
161437-03-CHT
BOLT
G42-04-12U (4)
ANGLE-FORMED
132881-00-170
DETAIL DT
SECTION CB-CB
(7 PLCS)
BOLT
RISER
VEHICLE
FRONT AXLE
DATUM
DETAIL DS
TUBE-STL
160764-02-996
ANGLE-FORMED
132881-01-130
STL-TUBE
130880-03-598
ANGLE-FORMED
132881-00-780
CHANNEL-FORMED
160955-01-CHT
TUBE-ASM
161437-02-CHT
BOLT
G42-04-12U (4)
ANGLE-FORMED
132881-00-773
ANGLE-FORMED
132881-01-064
TUBE-STL
164897-06-CHT
ANGLE-FORMED
132881-00-794
ANGLE-FORMED
132881-00-100
ANGLE-FORMED
132881-00-950
STL-TUBE
130880-03-598
CHANNEL-FORMED
160955-02-CHT
NOTCH
SECTION CG-CG
ANGLE-FORMED
TOP OF
FLOOR FRAME
SECTION CC-CC
DATUM
(TOP OF CHASSIS RAIL)
ANGLE-FORMED
ANGLE-SHIM
160997-01-CHT
SECTION CE-CE
SHOWN
SECTION CF-CF
SIMILAR
DETAIL CA
FLOOR FRAME ASM
170801-13
FIRST USED
10 J32H
DO NOT SCALE DRAWING
TITLE:
FRAME ASM-CHASSIS
SHEET 3
PART NO
170801
REV
10/21/2009

DWG NO 170801

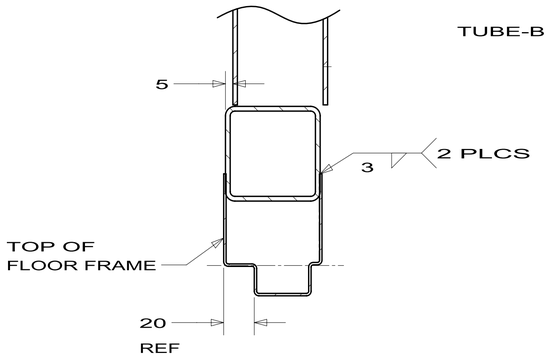

SECTION DD-DD

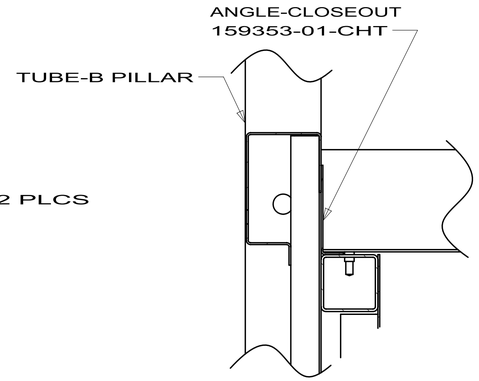

SECTION DE-DE

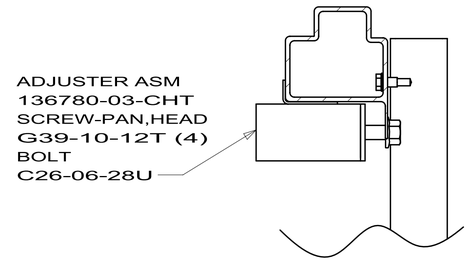

SECTION DF-DF
2 PLCS

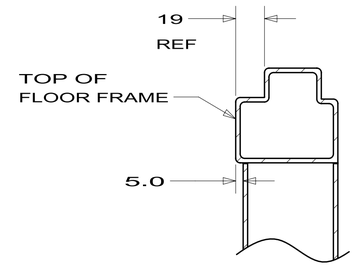

SECTION DG-DG

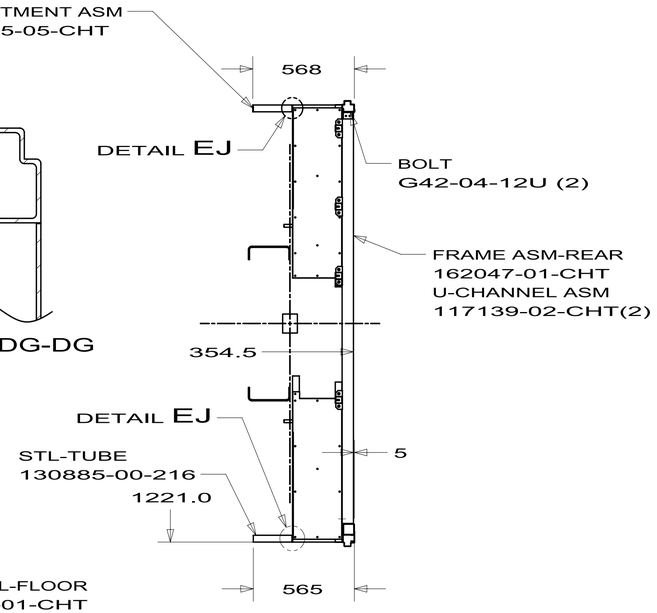

SECTION DR-DR

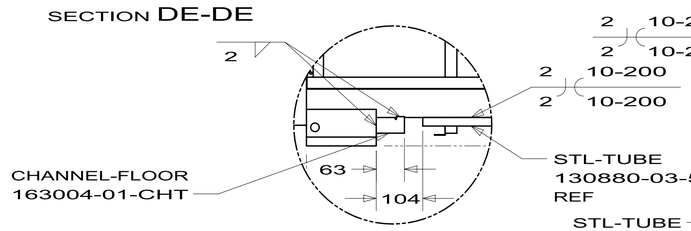

DETAIL DS

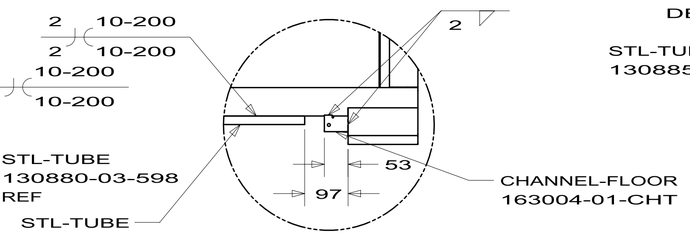

DETAIL DT

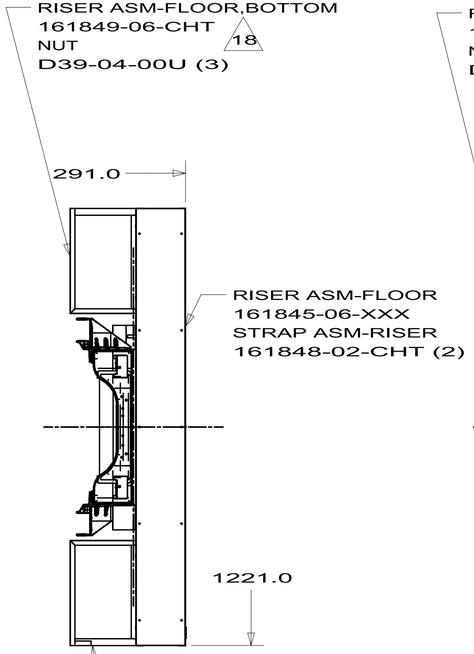

SECTION DK-DK

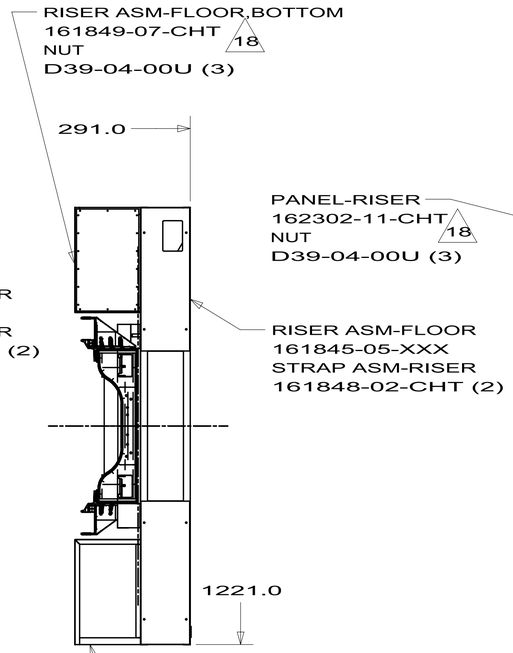

SECTION DL-DL

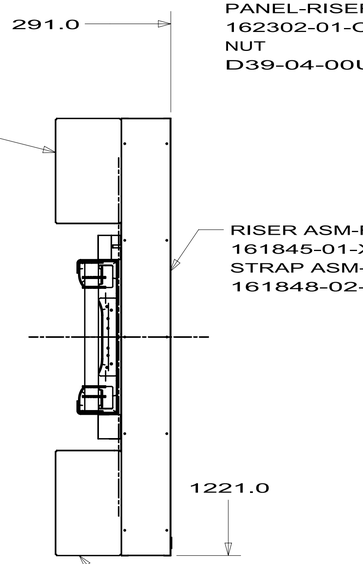

SECTION DM-DM

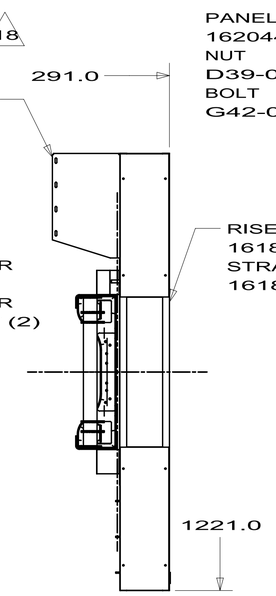

SECTION DN-DN

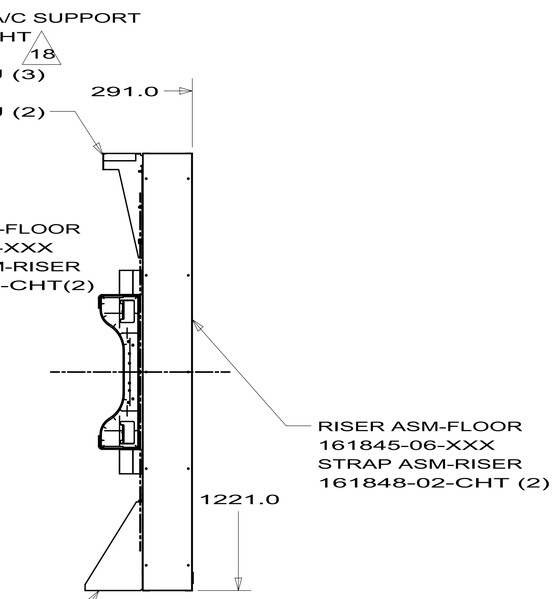

SECTION DP-DP

FIRST USED	10 J32H
DO NOT SCALE DRAWING	
TITLE:	FRAME ASM-CHASSIS
SHEET 4	PART NO 170801 REV

10/21/2009

DWG NO 170801

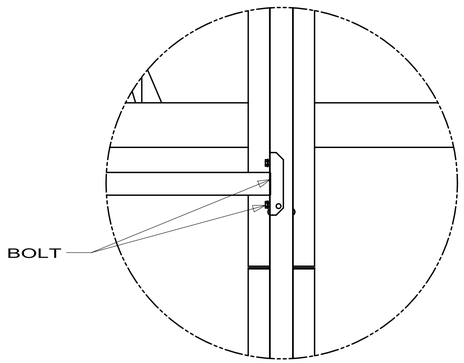

DETAIL ED
12 PLACES

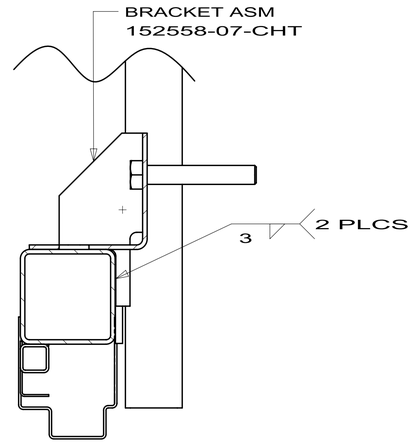

SECTION EG-EG
3 PLCS

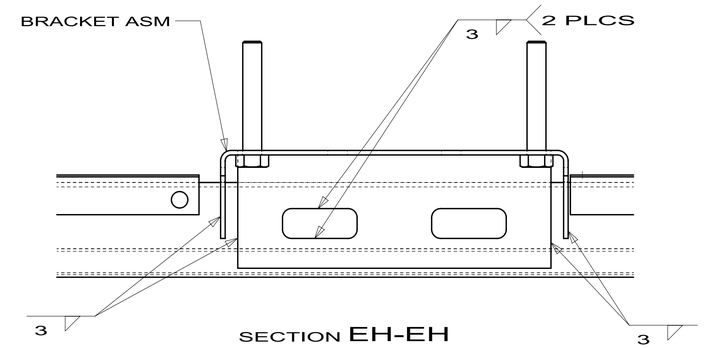

SECTION EH-EH
3 PLCS

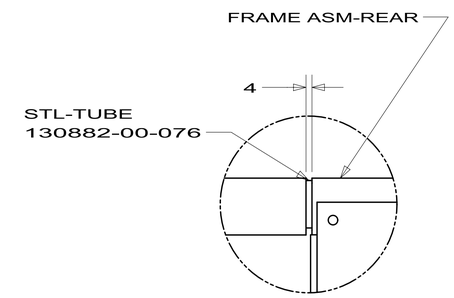

DETAIL EJ
2 PLACES

FIRST USED	10 J32H
DO NOT SCALE DRAWING	
TITLE:	FRAME ASM-CHASSIS
SHEET 5	PART NO 170801 REV

10/21/2009

DWG NO 170801

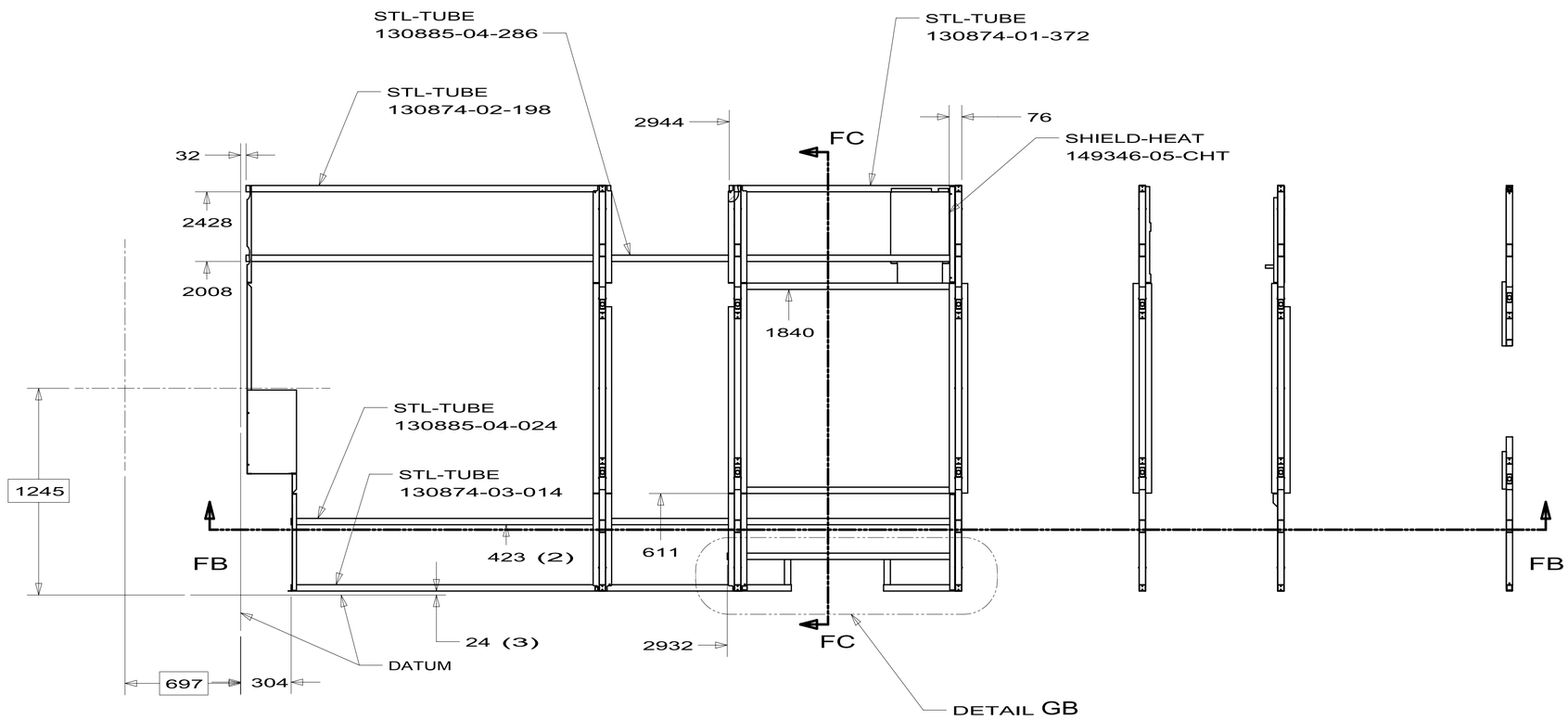

SECTION FA-FA

LOWER TUBES
170801-14

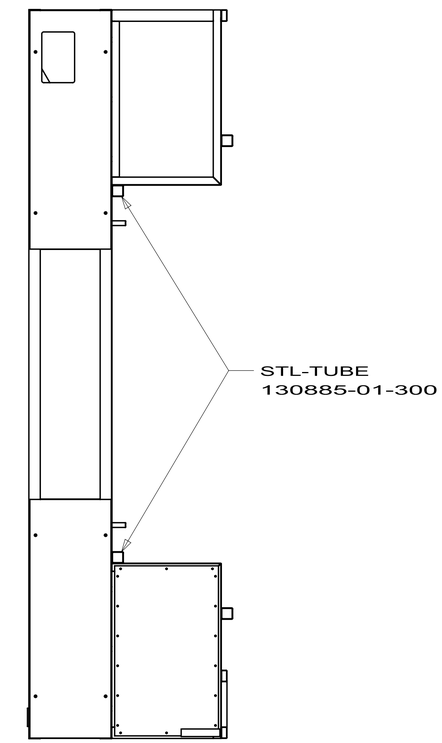

SECTION FC-FC

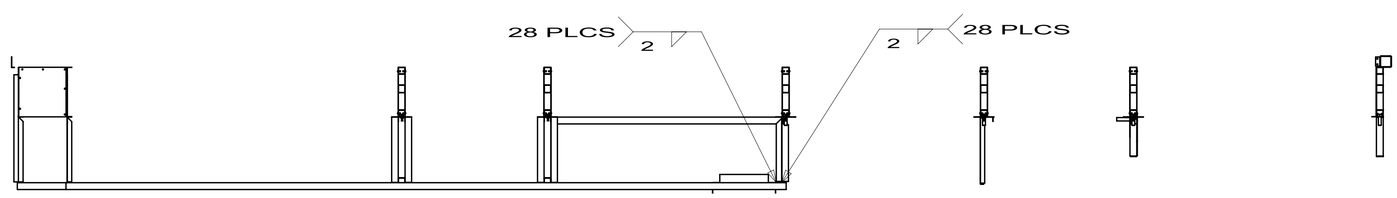

SECTION FB-FB

FIRST USED	10 J32H
	DO NOT SCALE DRAWING
TITLE:	FRAME ASM-CHASSIS
SHEET 6	PART NO 170801 REV

10/21/2009

DWG NO 170801

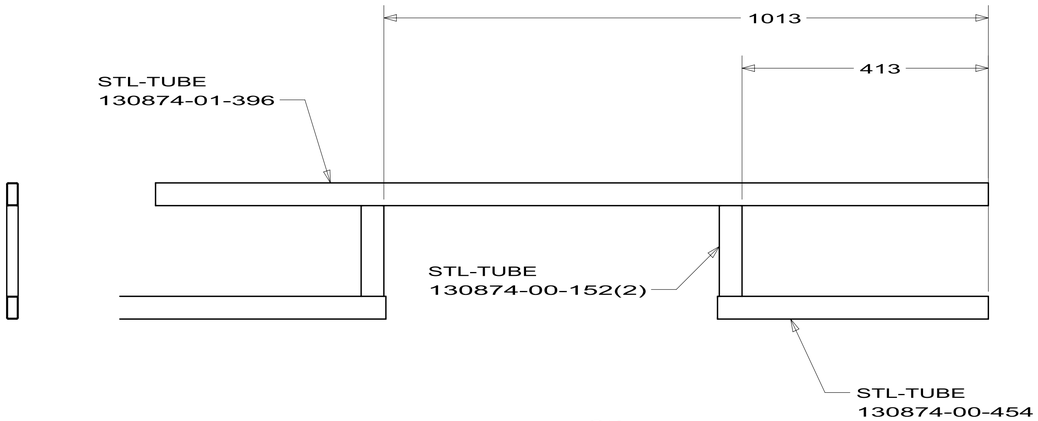

DETAIL GB
FRAME ASM
170801-18

FIRST USED	10 J32H
	DO NOT SCALE DRAWING
TITLE:	FRAME ASM-CHASSIS
SHEET 7	PART NO. 170801 REV

10/21/2009

DWG NO 170801

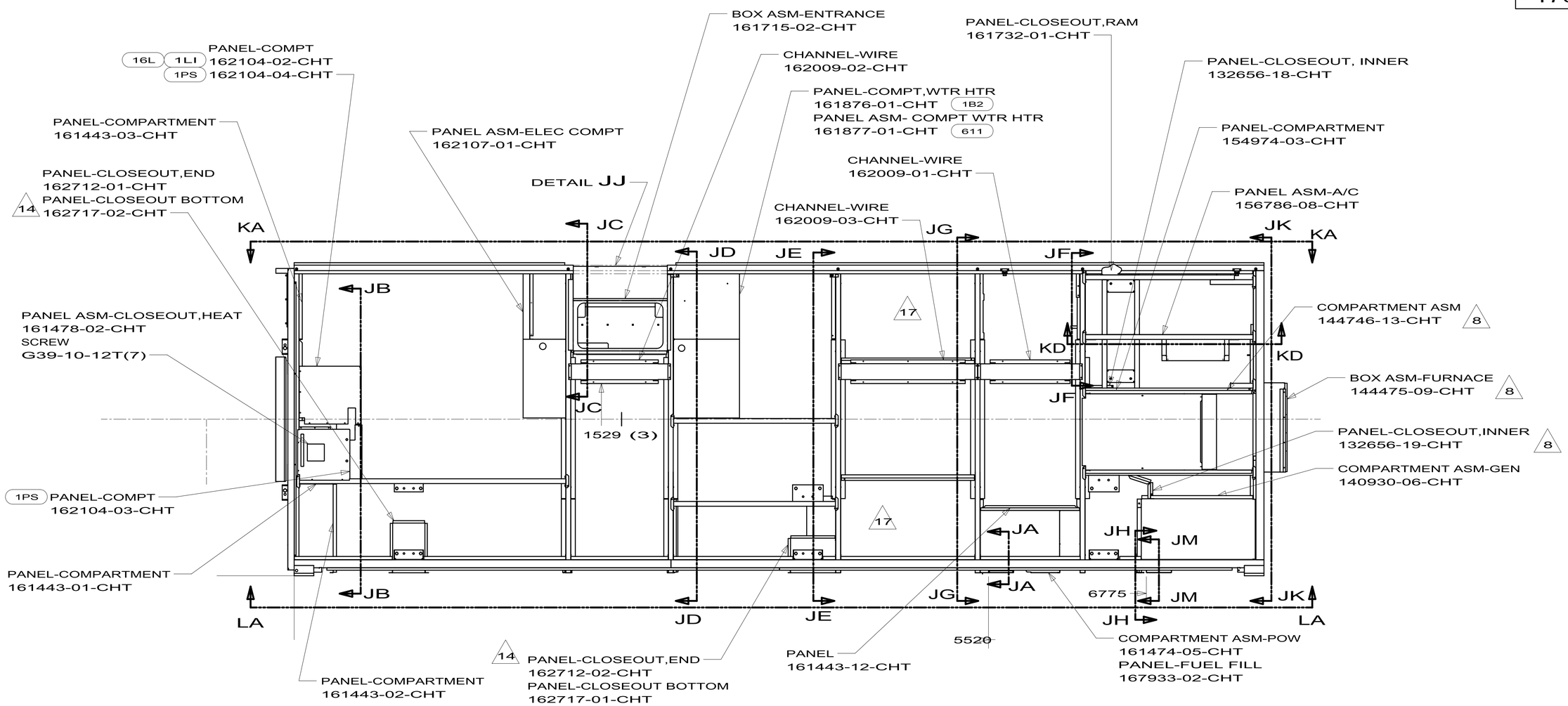

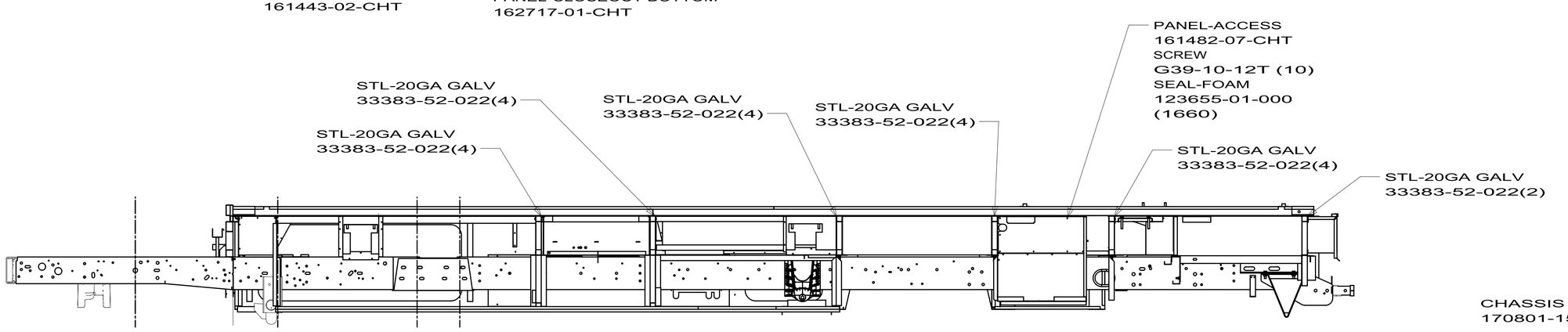

CHASSIS - MISC
170801-15

FIRST USED	10 J32H
	DO NOT SCALE DRAWING
TITLE:	FRAME ASM-CHASSIS
SHEET 8	PART NO 170801 REV

10/21/2009

DWG NO 170801

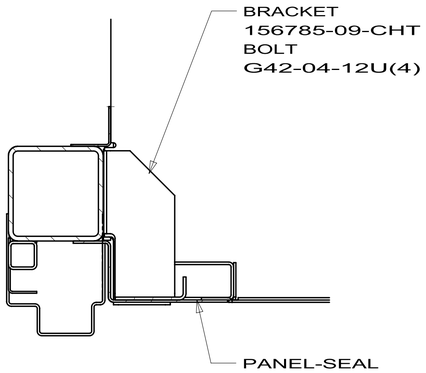

SECTION JA-JA

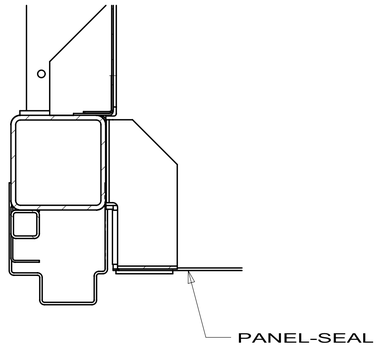

SECTION JM-JM

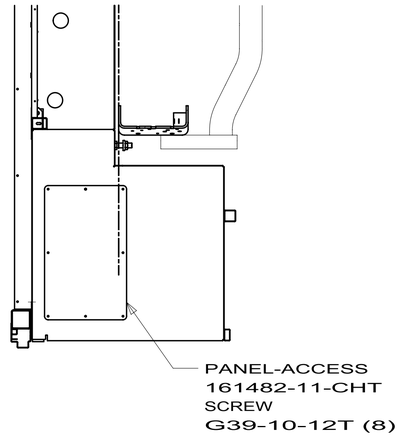

SECTION JB-JB

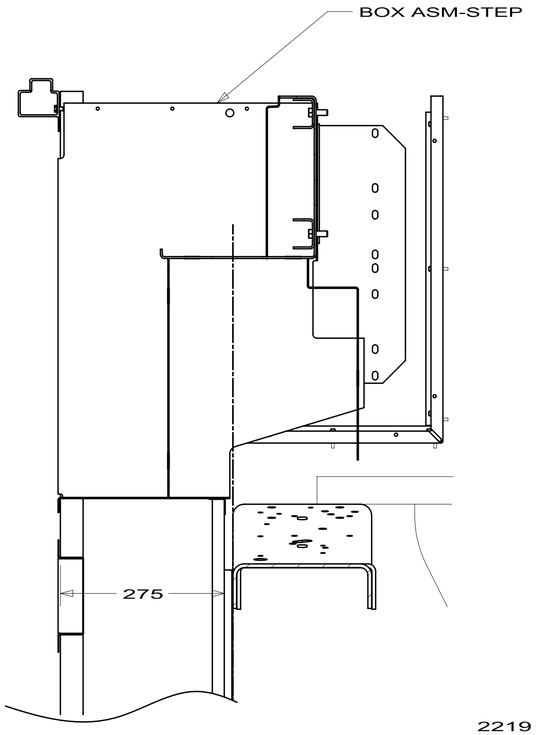

SECTION JC-JC

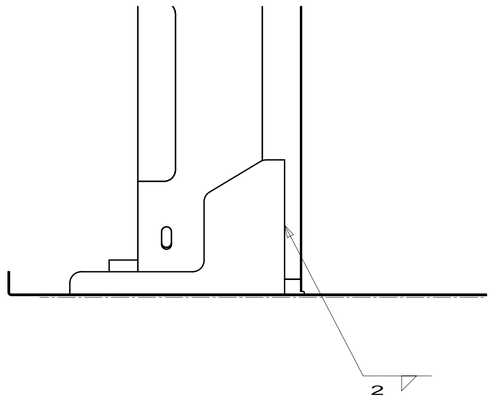

SECTION JH-JH

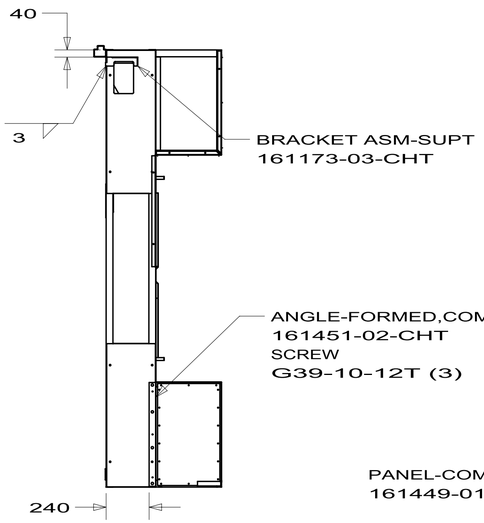

SECTION JD-JD

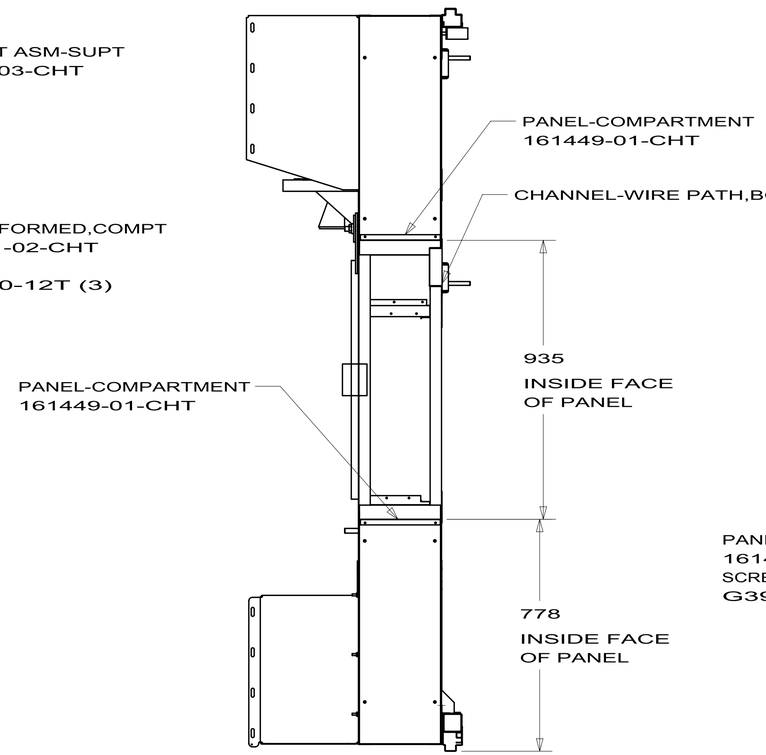

SECTION JG-JG

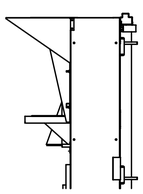

SECTION JF-JF

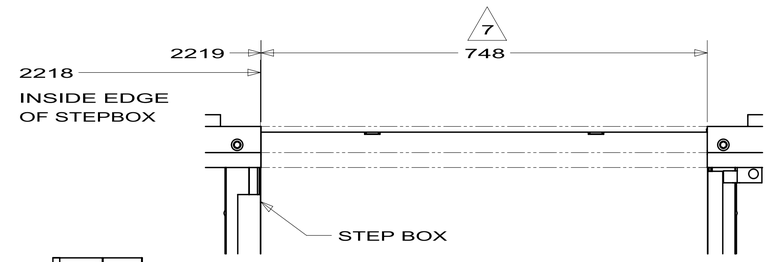

DETAIL JJ

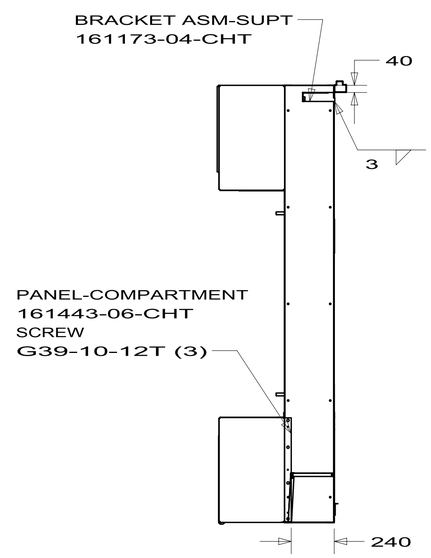

SECTION JE-JE

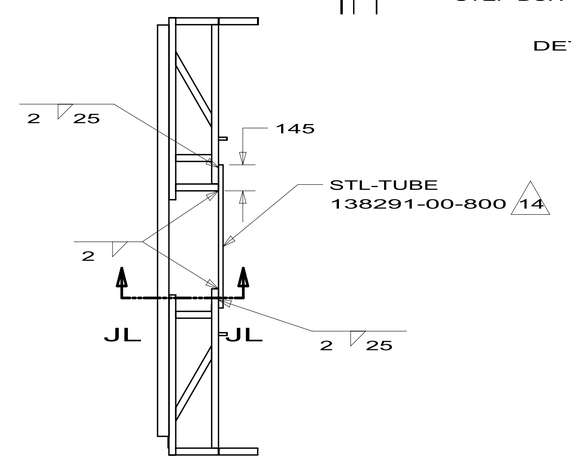

SECTION JK-JK

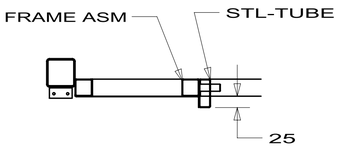

SECTION JL-JL

FIRST USED	10 J32H
DO NOT SCALE DRAWING	
TITLE:	FRAME ASM-CHASSIS
SHEET 9	PART NO 170801 REV

10/21/2009

DWG NO 170801

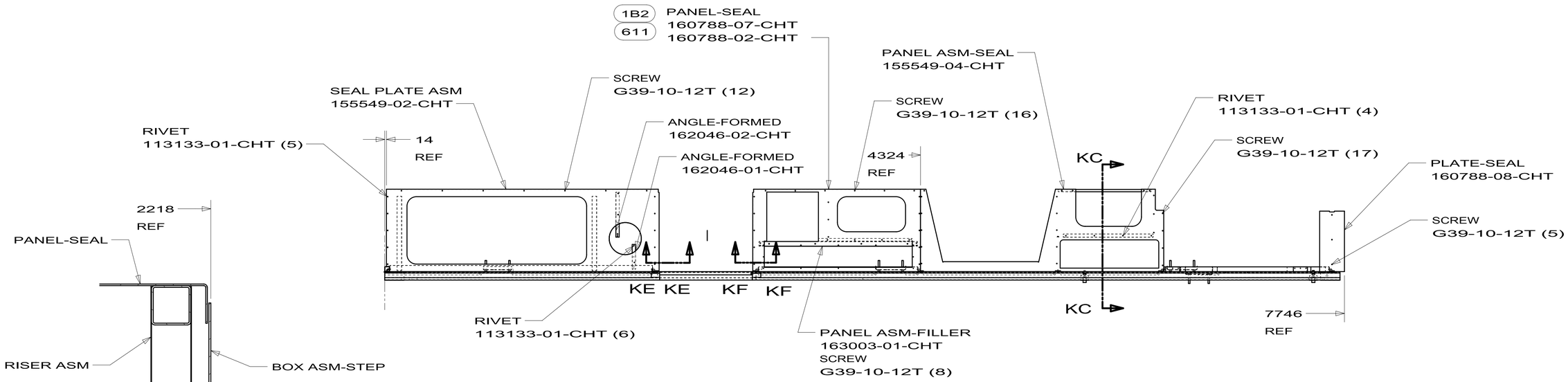

SECTION KA-KA
SEAL PLANE ASM - RH
170801-16

SECTION KE-KE
SHOWN
SECTION KF-KF
SIMILAR

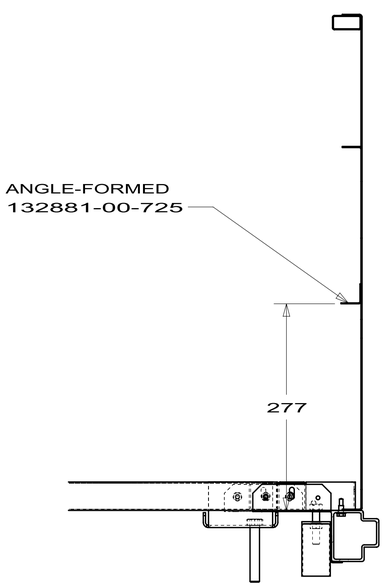

SECTION KC-KC

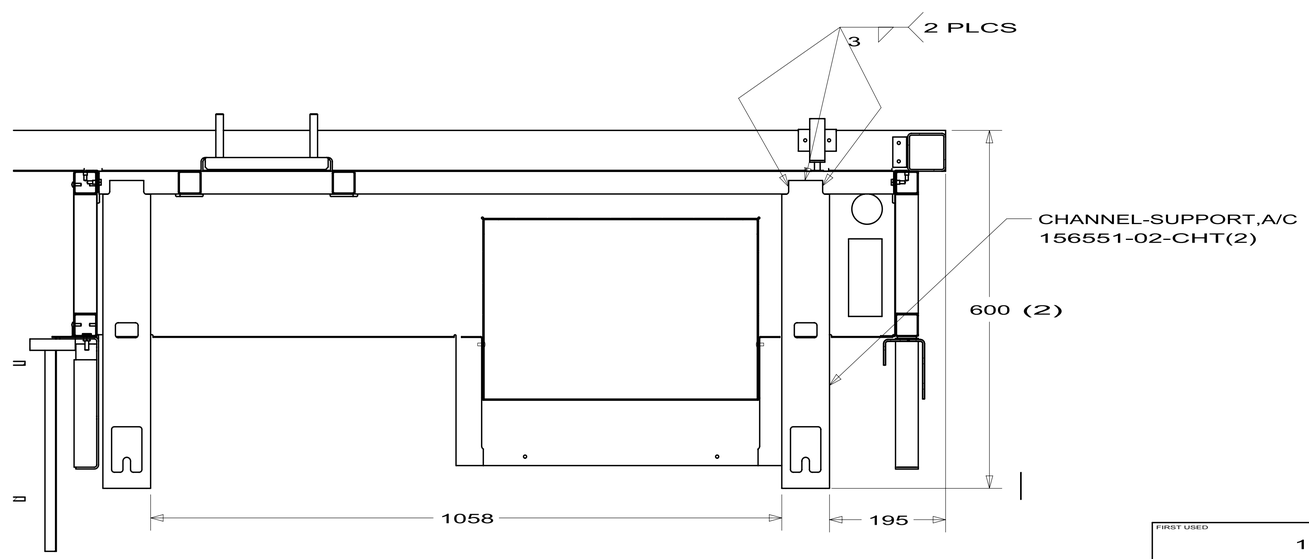

SECTION KD-KD

FIRST USED	10 J32H
	DO NOT SCALE DRAWING
TITLE:	FRAME ASM-CHASSIS
SHEET 10	PART NO. 170801 REV

10/21/2009

DWG NO 170801

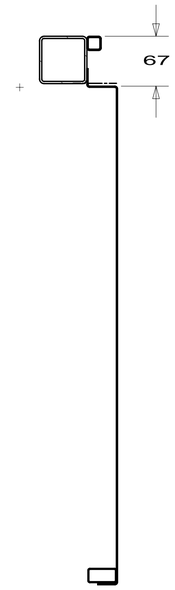

SECTION LC-LC

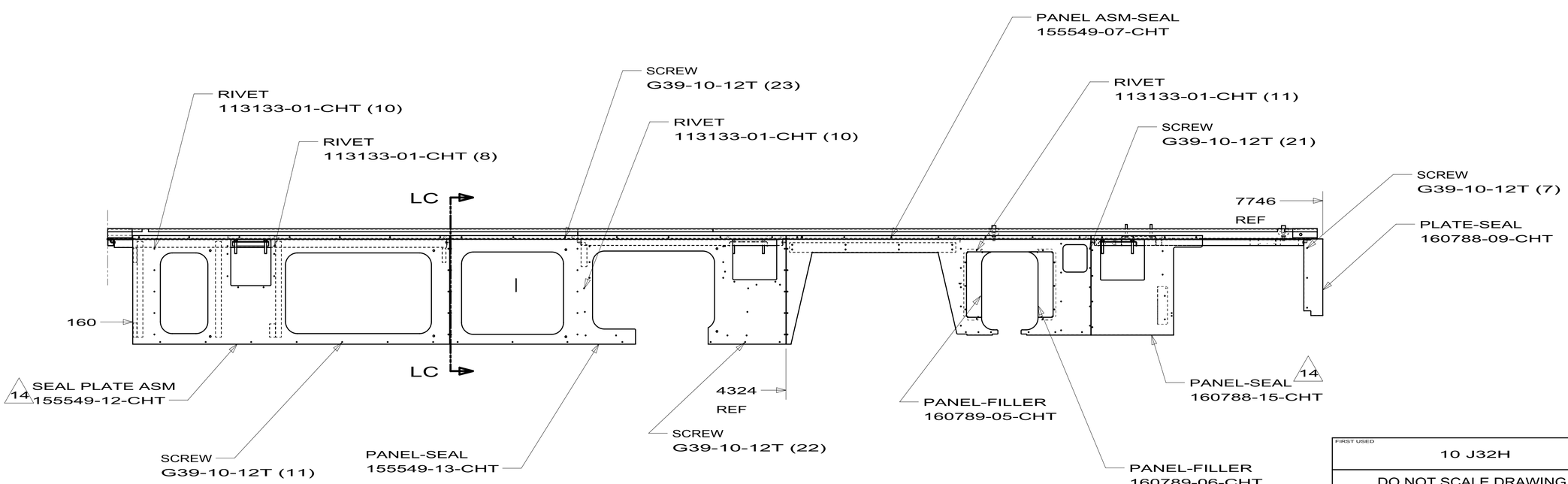

SECTION LA-LA
SEAL PLANE ASM - LH
170801-17

FIRST USED	10 J32H
	DO NOT SCALE DRAWING
TITLE:	FRAME ASM-CHASSIS
SHEET 11	PART NO 170801 REV

10/21/2009

DWG NO	FRONT END ASM	DETAIL	VIEW		
164504-01	164505-01-CHT	BB	EB	NOT USED	
164504-02	164505-02-CHT	FA	EB	NOT USED	
164504-03	164505-03-CHT	FA	EB	W/O TV	J32H,J35P,J37F
164504-04	164505-04-CHT	FA	EB	W/O TV	J35Z,J38N
164504-05	164505-01-CHT	BB	ED	NOT USED	
164504-06	164505-02-CHT	FA	ED	NOT USED	
164504-07	164505-03-CHT	FA	ED	W/O TV	
164504-08	164505-04-CHT	FA	ED	NOT USED	
164504-09	164505-05-CHT	FA	EB	W/TV	J35Z
164504-10	164505-05-CHT	FA	ED	NOT USED	
164504-11	164505-06-CHT	FA	EB	NOT USED	
164504-12	164505-07-CHT	FA	EB	W/TV	J37F

RELEASE	REV A	DATE	DWG NO 164504
REV	ZONE	REVISION RECORD	DATE / DFTR-ORIG

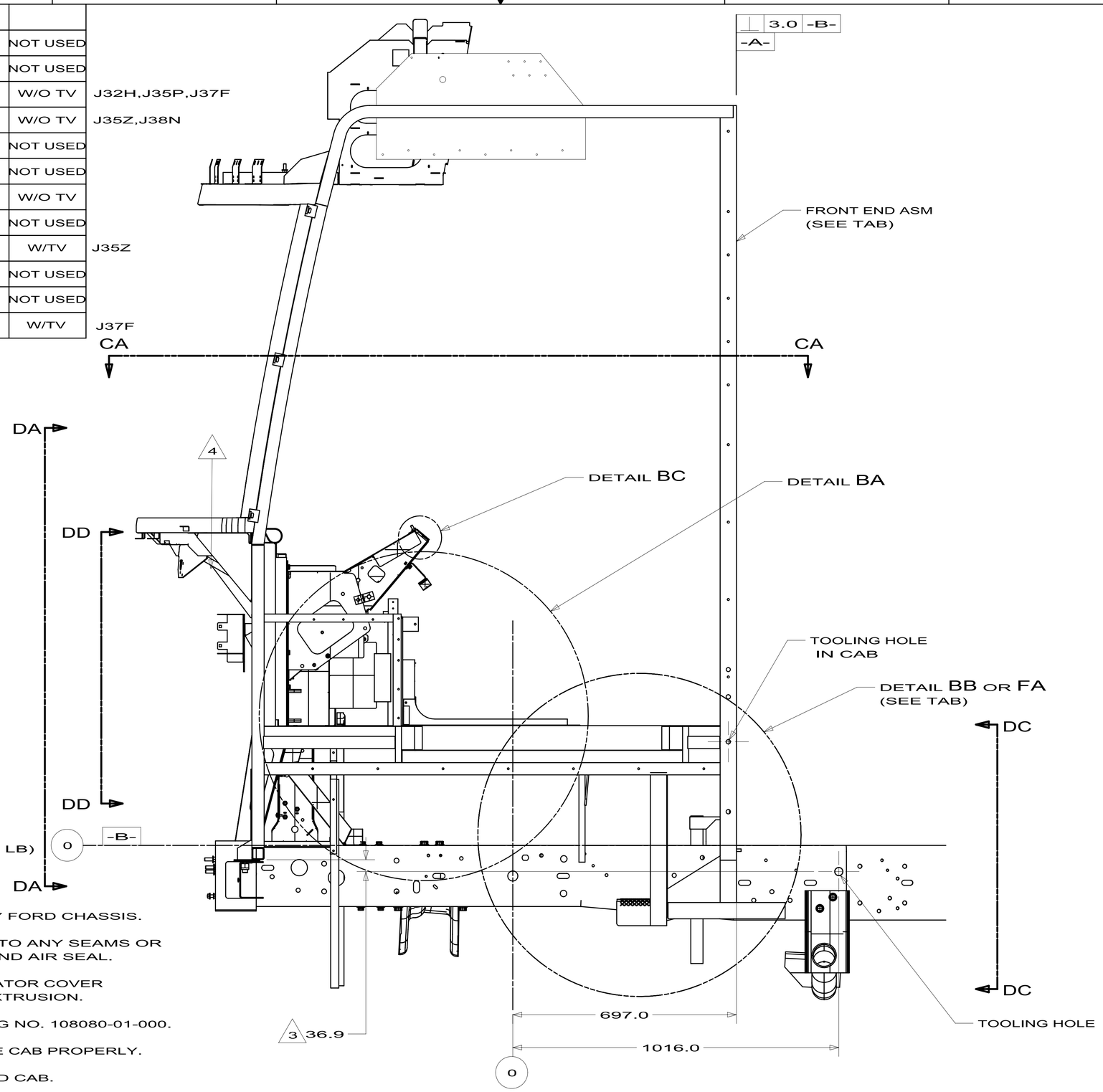

9. TORQUE TO: 191-209 Nm (143-157 FT LB)

8. ADD OR REMOVE SHIMS AS NEEDED TO LEVEL FRONT END ASM.

7. USED TO FILL BULKHEAD AREA ON 2007 FORD CHASSIS.

6. APPLY PUTTY SEALER, 111940-02-000, TO ANY SEAMS OR HOLES THAT NEED A FLEXIBLE DUST AND AIR SEAL.

5. ALIGN FRONT OF PANEL ASM WITH RADIATOR COVER AND REAR WITH ENGINE COVER SEAL EXTRUSION.

4. FOR BRAKE INST-EMERGENCY SEE DWG NO. 108080-01-000.

3. ADJUST HEIGHT OF SUPPORT TO LOCATE CAB PROPERLY.

2. SEAL ALL JOINTS BETWEEN PANELS AND CAB.

1. REMOVE ALL BURRS AND SHARP EDGES.

NOTES:

SEE CHART

FOR COLOR VARIATIONS OF THIS PART

WINNEBAGO INDUSTRIES

COPYRIGHT 2009 WINNEBAGO INDUSTRIES, INC.

DFTR	ORIG. DATE
CHKR	ALL DIMENSIONS ARE IN MILLIMETERS
P.E.	
M.E.	FIRST USED
DSNR	09 J, K FORD

UNSPECIFIED TOLERANCES ARE:
WHOLE DIM (X) : 3
ONE-PLACE (X.X) : 1.5
TWO-PLACE (X.XX) : 0.50
ANGLE : 1°

MATERIAL:

THIRD ANGLE PROJECTION

DO NOT SCALE DRAWING

TITLE: FRONT END/CHASSIS ASM

SHEET 1 OF 6 | PART NO 164504 | REV

REF:

DWG NO 164504

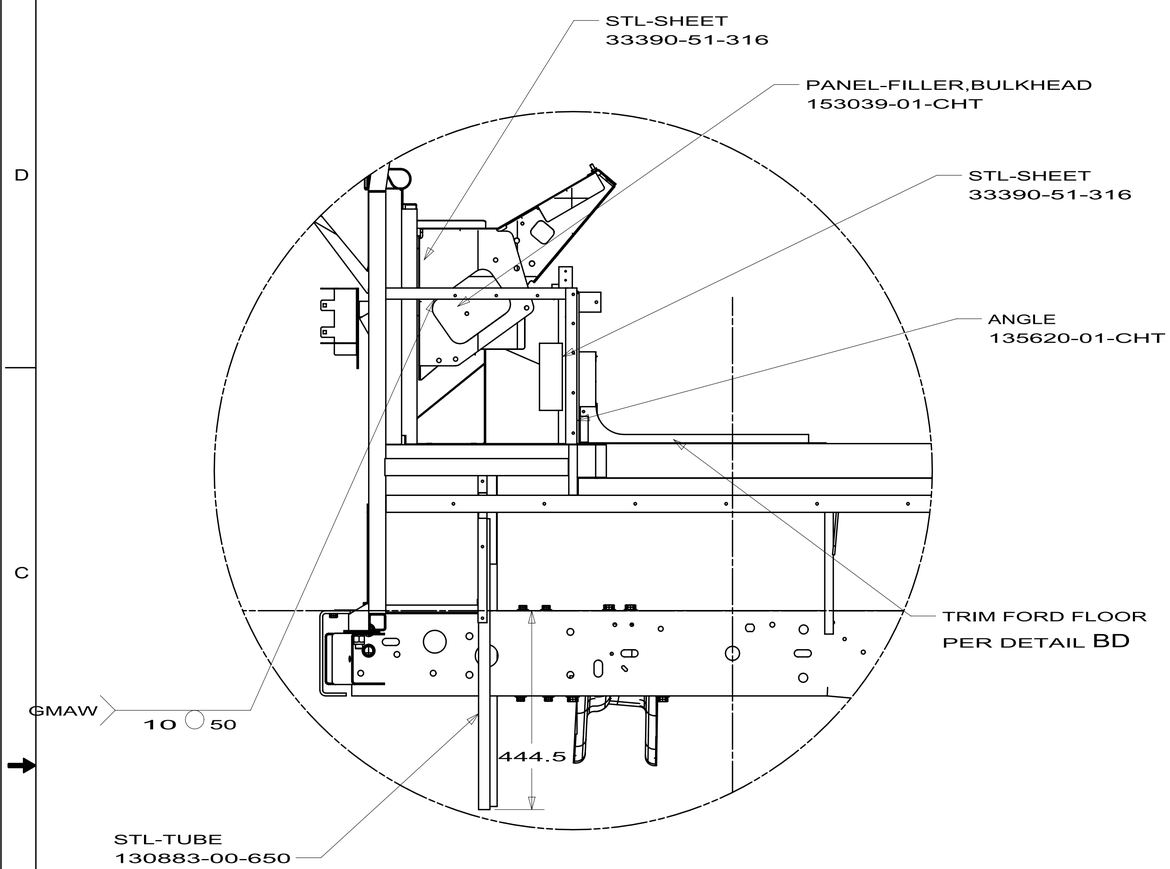

DETAIL BA

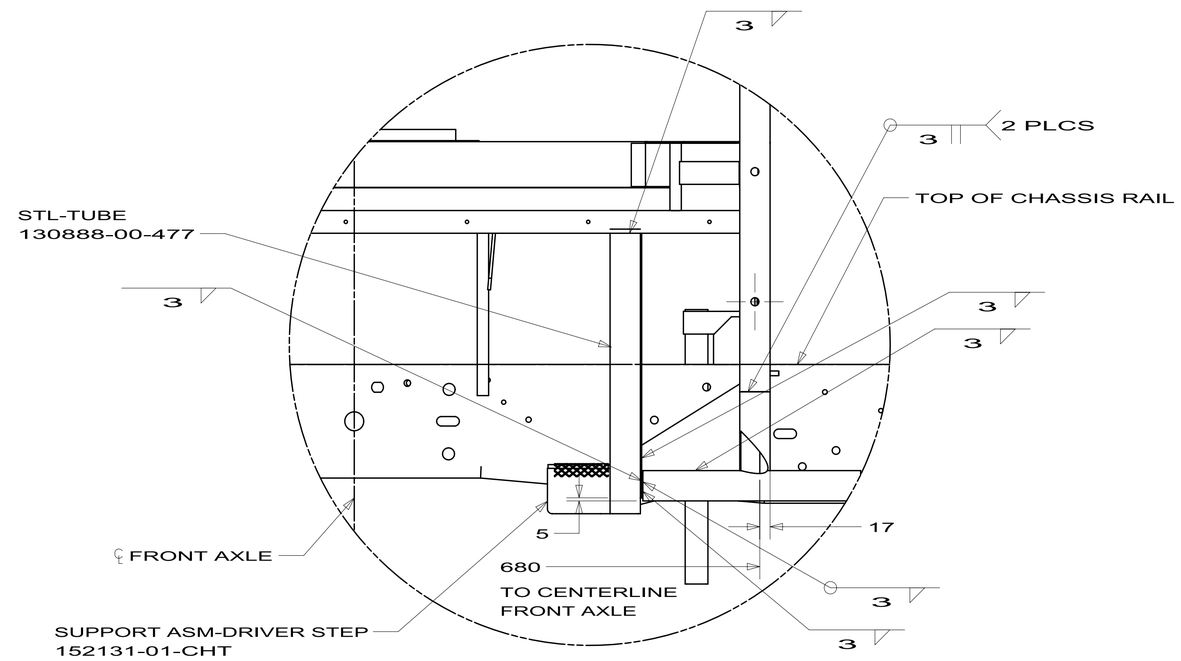

DETAIL BB

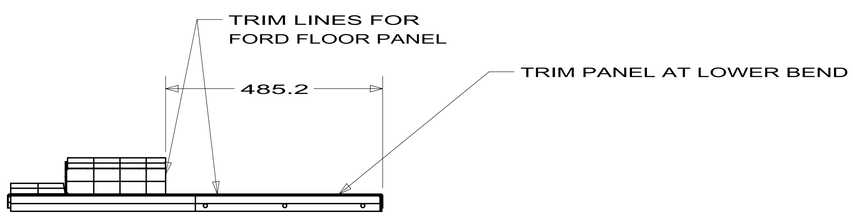

DETAIL BD

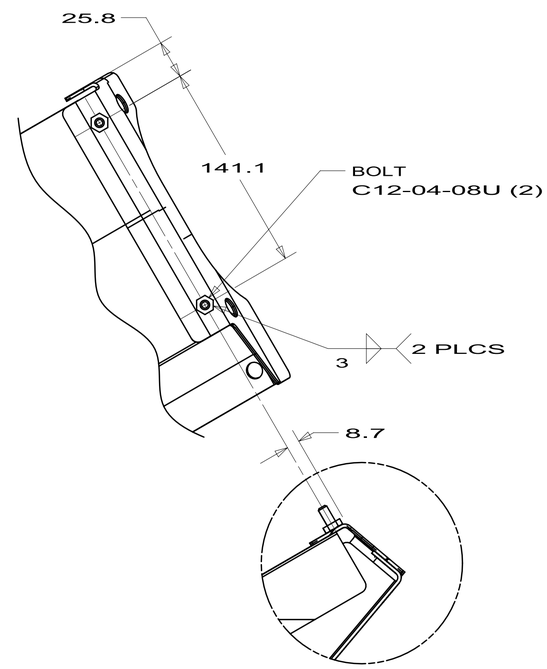

DETAIL BC

FIRST USED	09 J, K FORD
DO NOT SCALE DRAWING	
TITLE:	FRONT END/CHASSIS ASM
SHEET 2	PART NO 164504 REV

DWG NO 164504

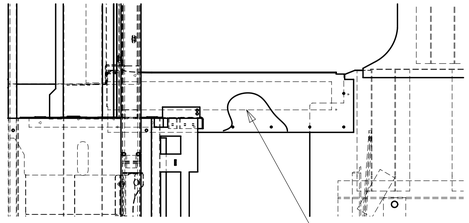

DETAIL CB

INSULATION-FLOOR,CAB
135774-01-000

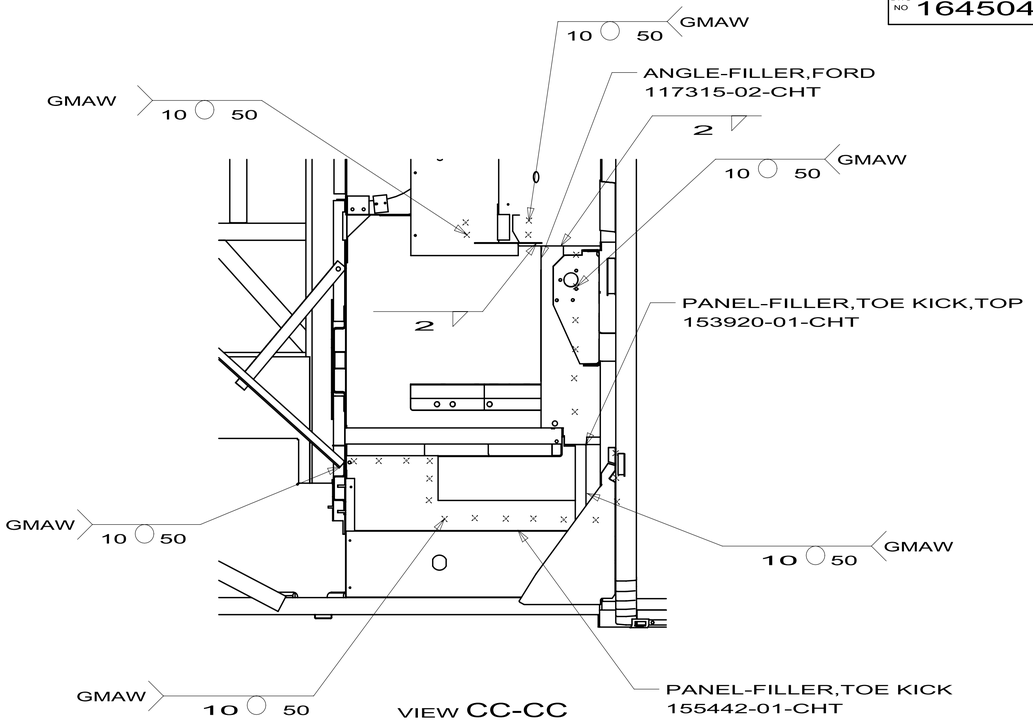

VIEW CC-CC

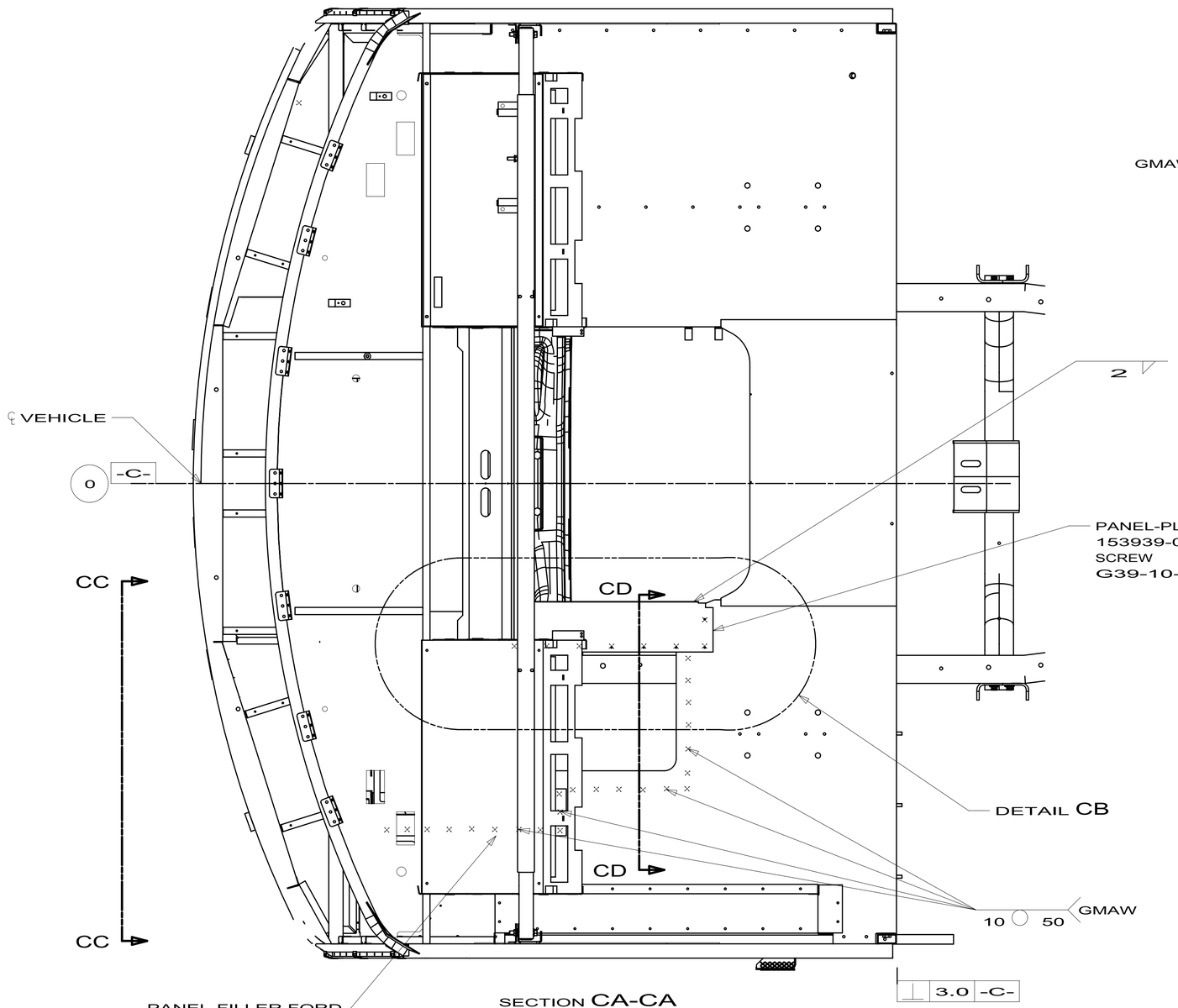

SECTION CA-CA

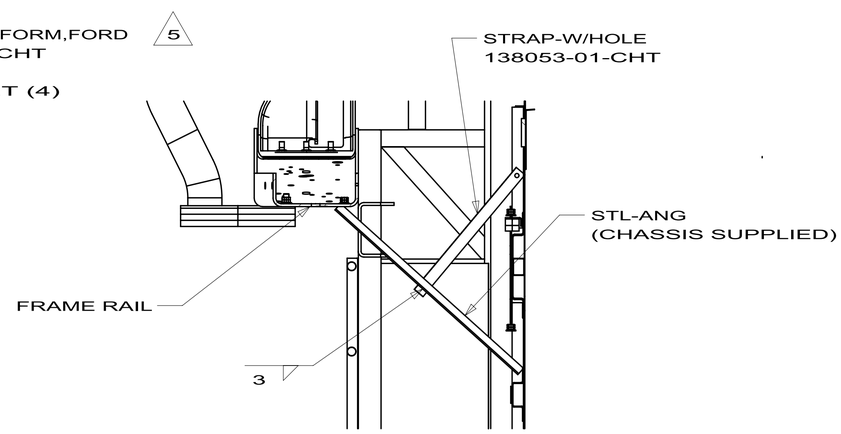

SECTION CD-CD

FIRST USED	09 J, K FORD
	DO NOT SCALE DRAWING
TITLE:	FRONT END/CHASSIS ASM
SHEET 3	PART NO 164504 REV

DWG NO 164504

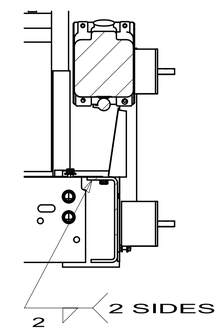

SECTION DB-DB

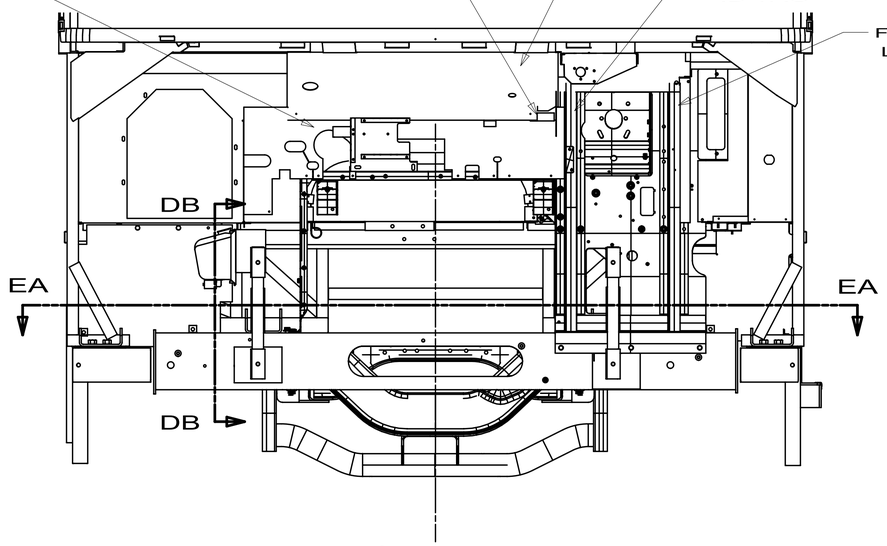

VIEW DA-DA

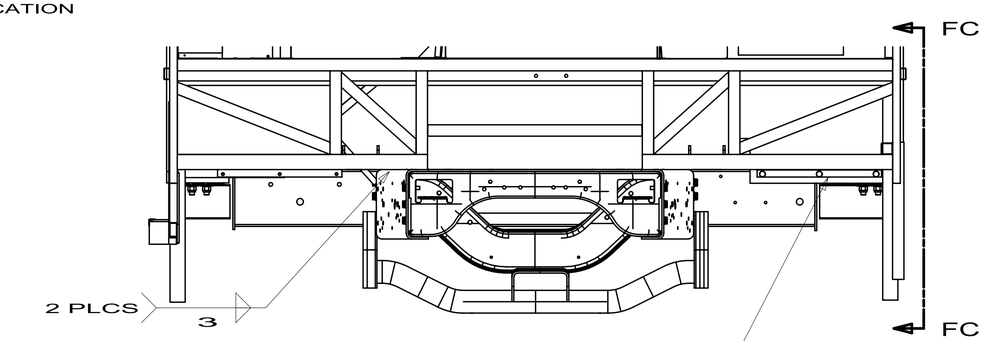

SECTION DC-DC

SHIELD-SPLASH
144679-02-CHT
NUT
D39-04-000 (2)
SCREW
G11-10-12B (2)

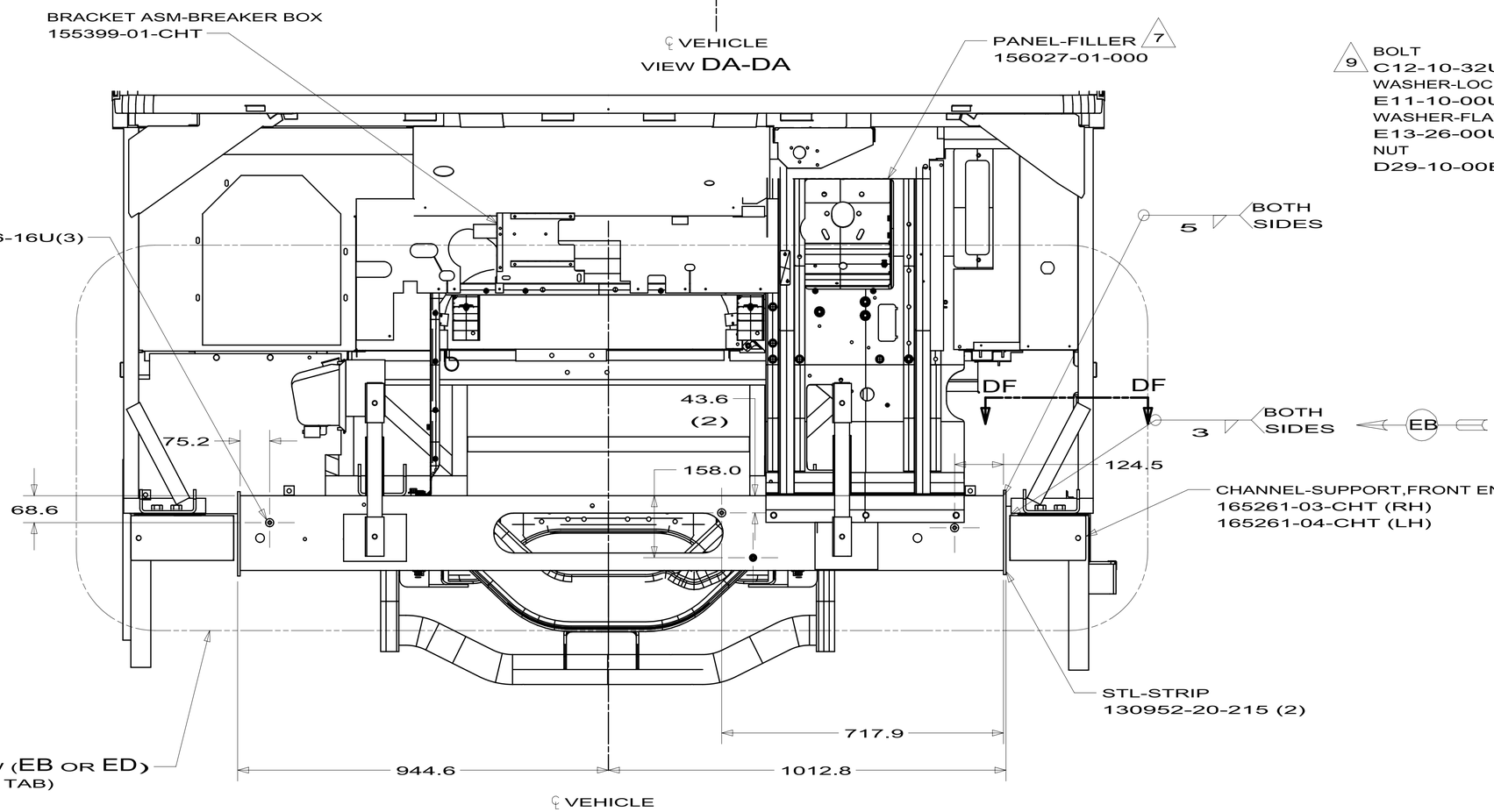

VIEW DD-DD

9 BOLT
C12-10-32U (4)
WASHER-LOCK
E11-10-00U (4)
WASHER-FLAT
E13-26-00U (4)
NUT
D29-10-00B (4)

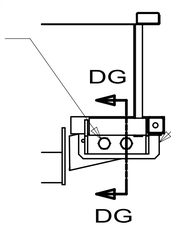

SHIM-SUPPORT,FRONT END
165262-01-CHT (4) 8

SECTION DF-DF

SECTION DG-DG

FIRST USED	09 J, K FORD
DO NOT SCALE DRAWING	
TITLE:	FRONT END/CHASSIS ASM
SHEET 4	PART NO 164504 REV

DWG NO 164504

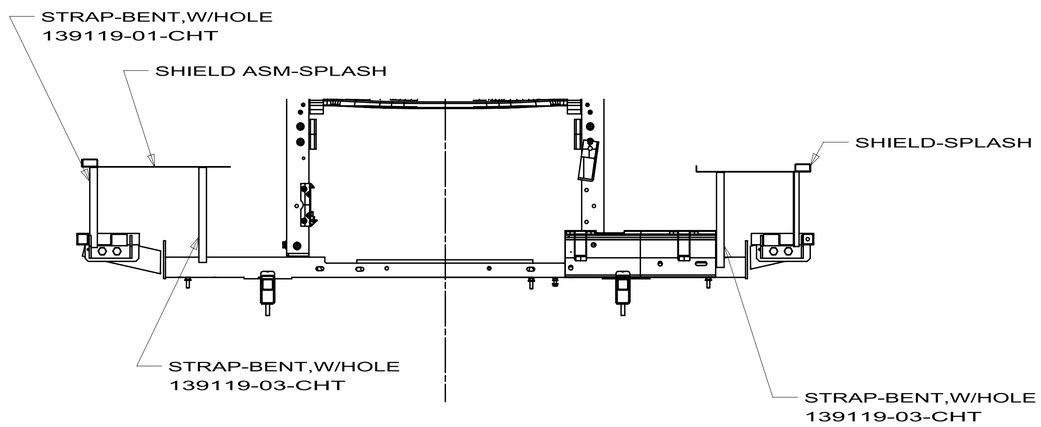

SECTION EA-EA

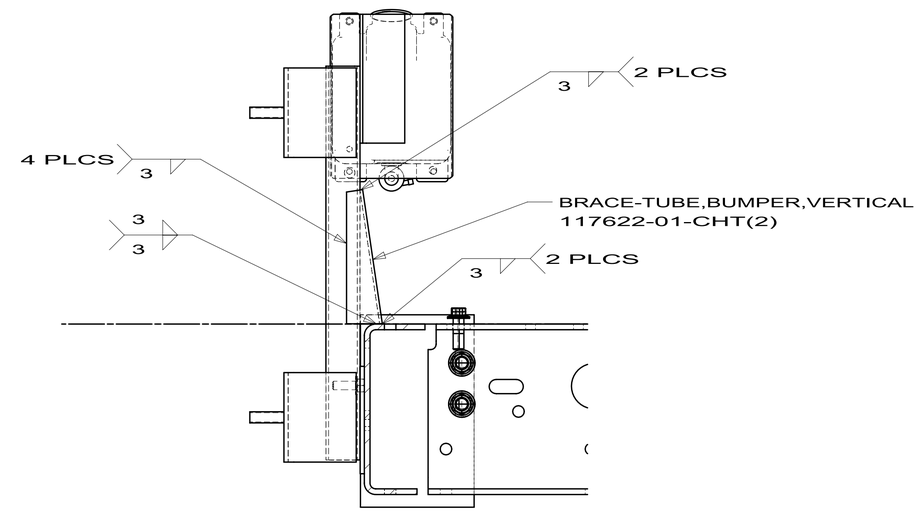

SECTION EC-EC
(SHOWN)
SECTION EF-EF
(SIMILAR)

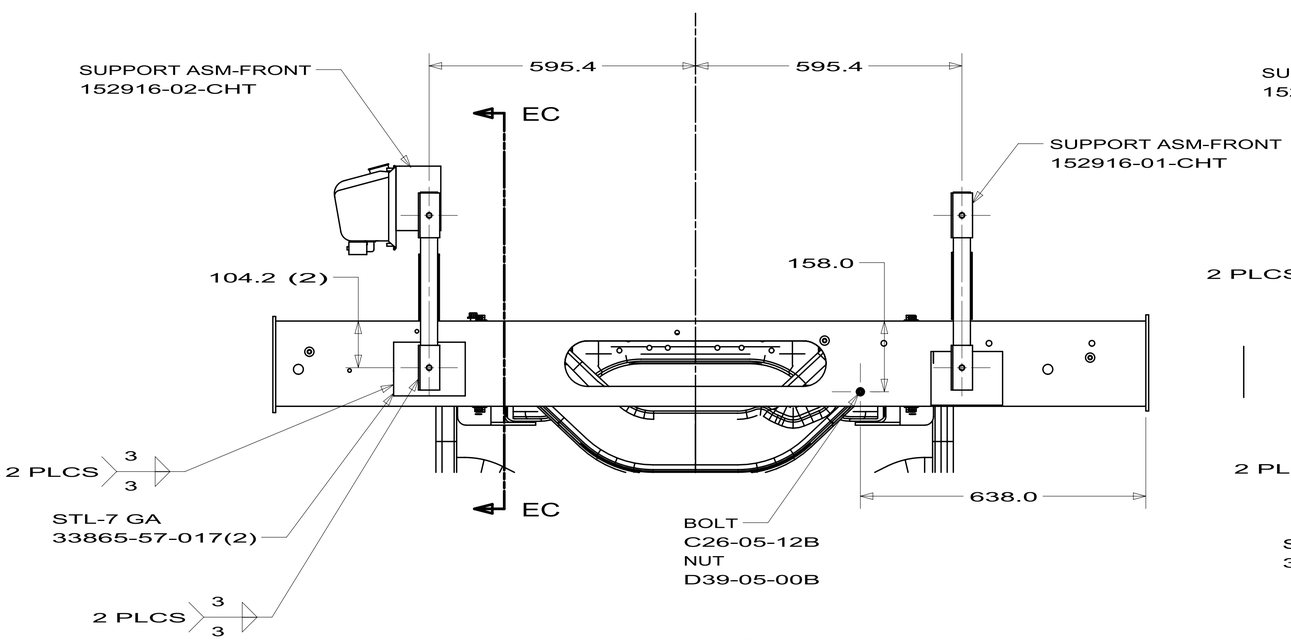

VIEW EB

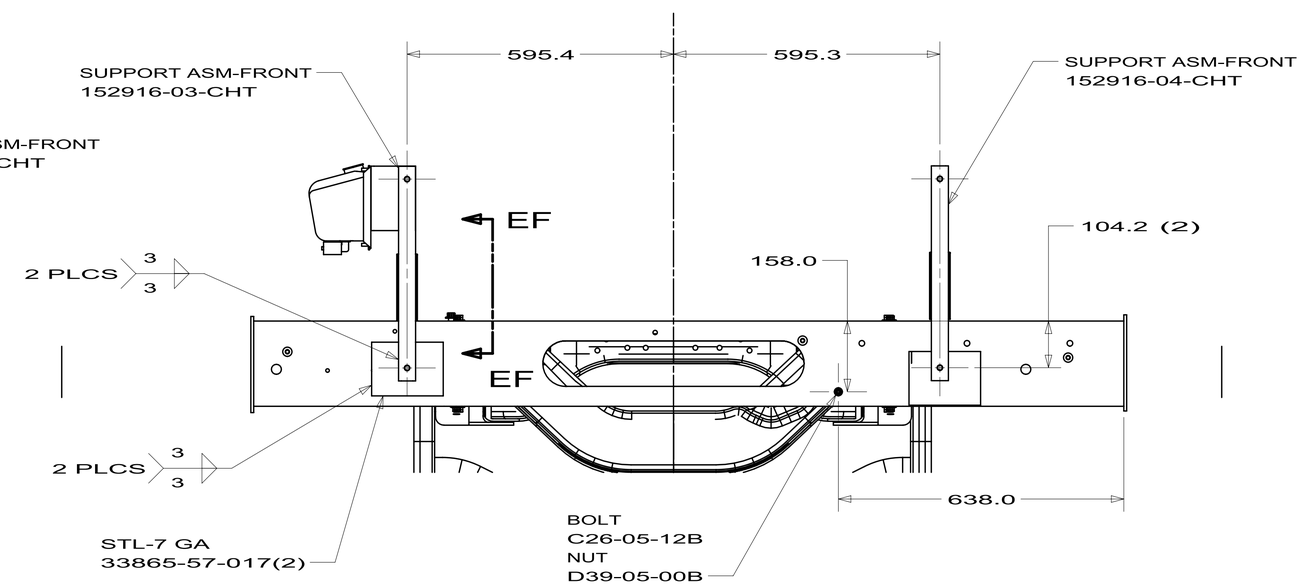

VIEW ED

FIRST USED	09 J, K FORD
	DO NOT SCALE DRAWING
TITLE:	FRONT END/CHASSIS ASM
SHEET 5	PART NO. 164504 REV

DWG NO 164504

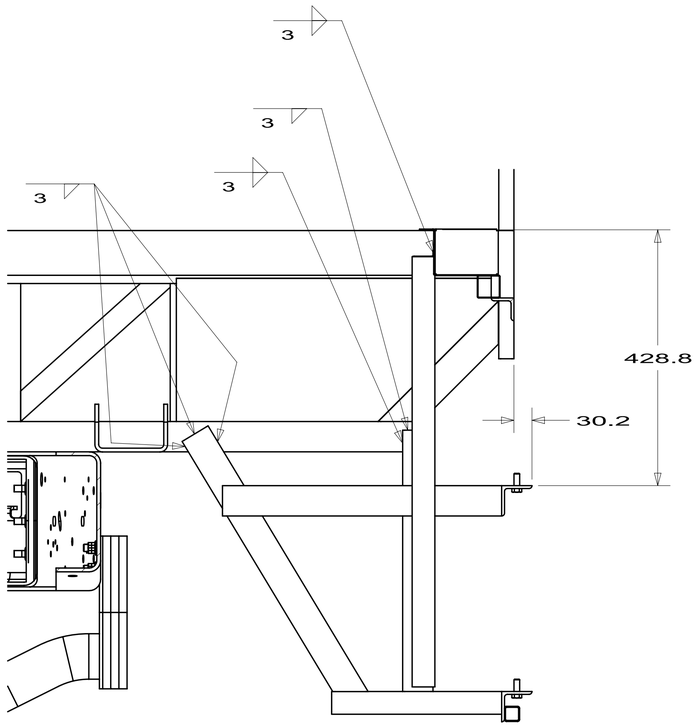

SECTION FB-FB

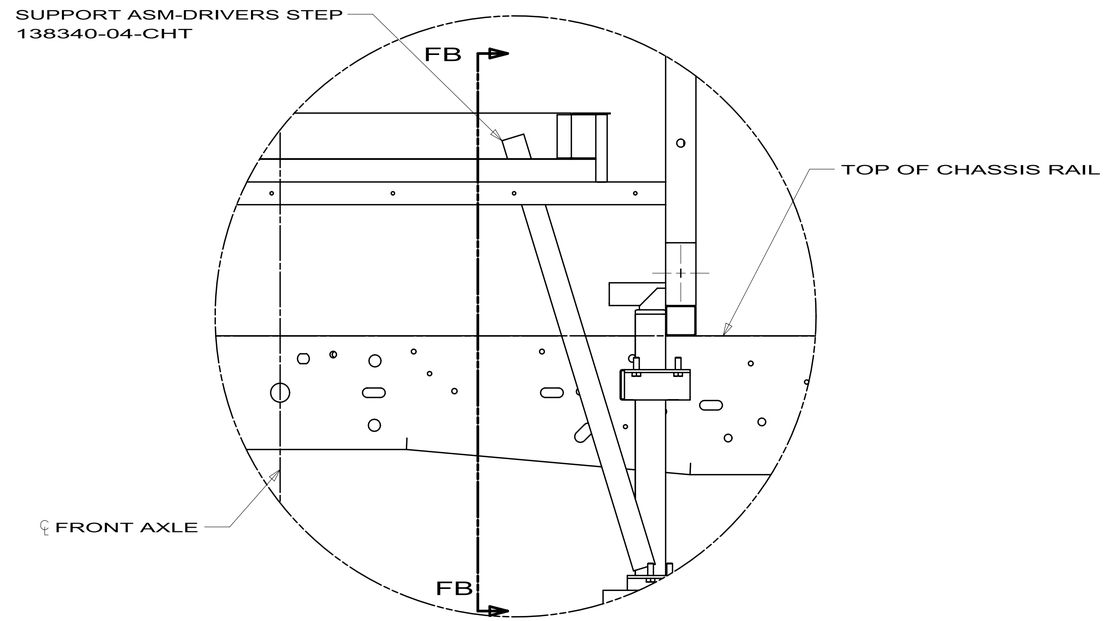

DETAIL FA

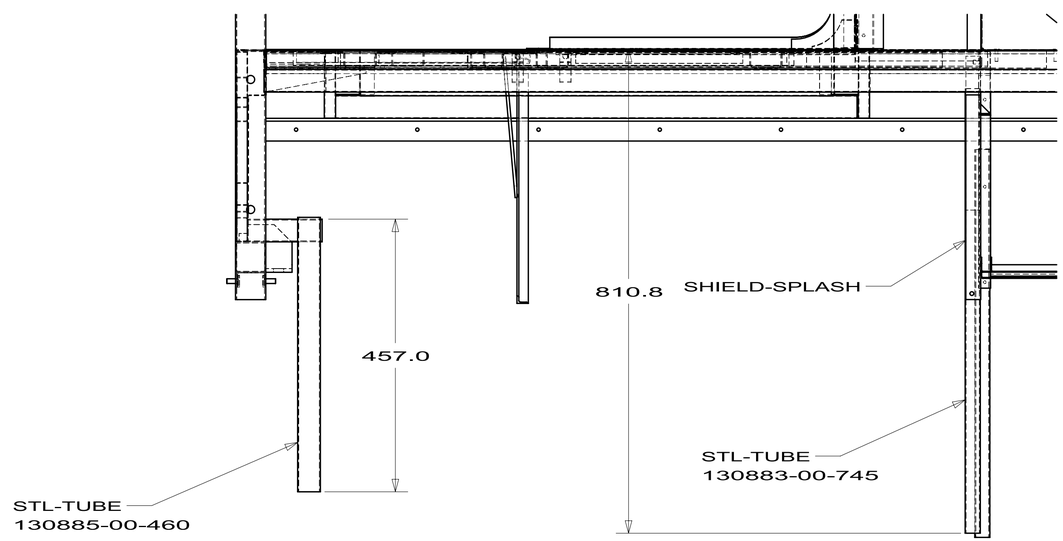

SECTION FC-FC

FIRST USED	09 J, K FORD
	DO NOT SCALE DRAWING
TITLE:	FRONT END/CHASSIS ASM
SHEET 6	PART NO. 164504 REV

DWG NO	LH B PILLAR	RISER ASM-CAB	SUPPORT ASM-TV	TUBE-TOP,LH	PLATE ASM-LH	A	B
164505-01	127874-09-CHT	145125-10-CHT	151975-03-CHT	117344-05-CHT	150653-04-CHT	0.0	10.0
164505-02	127874-10-CHT	145125-07-CHT	151975-03-CHT	117344-05-CHT	150653-04-CHT	0.0	10.0
164505-03	127874-10-CHT	145125-07-CHT	151975-02-CHT	117344-10-CHT	150653-07-CHT	34.0	40.0
164505-04	127874-10-CHT	145125-07-CHT	151975-02-CHT	117344-05-CHT	150653-04-CHT	0.0	10.0
164505-05	127874-10-CHT	145125-07-CHT	151975-04-CHT	117344-05-CHT	150653-04-CHT	0.0	10.0
164505-06	127874-10-CHT	145125-07-CHT	151975-03-CHT	117344-10-CHT	150653-07-CHT	34.0	40.0
164505-07	127874-10-CHT	145125-07-CHT	151975-04-CHT	117344-10-CHT	150653-07-CHT	34.0	40.0
164505-08	127874-10-CHT	145125-07-CHT	151975-05-CHT	117344-10-CHT	150653-07-CHT	34.0	40.0

RELEASE	REV A	DATE	DWG NO 164505
REV	ZONE	REVISION RECORD	DATE	DFTR-ORIG

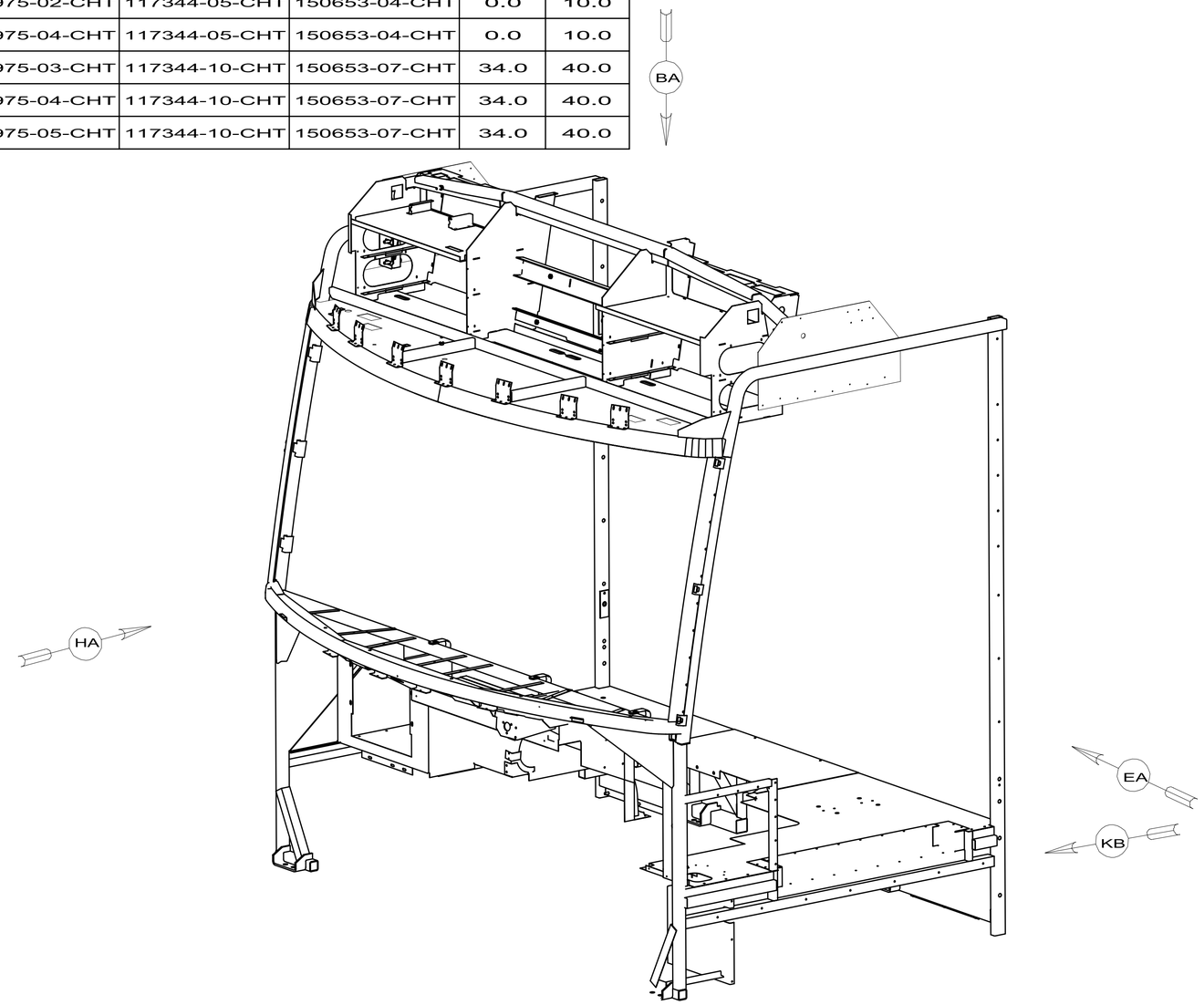

28F FRONT SHADE-POWERED

7. TORQUE BOLT TO 34 FT-LBS.
6. SEAL WITH SEALANT II0744-C3-000 AFTER E-COAT.
5. ALIGN HOLES.
4. HOLES MUST ALIGN TO ALLOW FREE PASSAGE OF A #10 SCREW.
3. MUST BE FLUSH WITHIN ± 1.5.
2. ATTACH AFTER E-COAT.
1. CLEAN, E-COAT AND SEAL CAB WITH 143201-01-000.

NOTES:

SEE CHART
FOR COLOR VARIATIONS OF THIS PART

WINNEBAGO INDUSTRIES

COPYRIGHT 2010
WINNEBAGO
INDUSTRIES, INC.

DFTR	ORIG. DATE
CHKR	ALL DIMENSIONS ARE IN MILLIMETERS
P.E.	
M.E.	FIRST USED
DSNR	09 J,K FORD

UNSPECIFIED TOLERANCES ARE:
WHOLE DIM (X) : 3
ONE-PLACE (X.X) : 1.5
TWO-PLACE (X.XX) : 0.50
ANGLE : 1°

MATERIAL:

THIRD ANGLE PROJECTION

DO NOT SCALE DRAWING

REFER TO ES0018 FOR FASTENER TIGHTENING GUIDELINES

TITLE: FRONT END ASM

SHEET 1 OF 11 | PART NO 164505 | REV

REF: 1

2/23/2010

DWG NO 164505

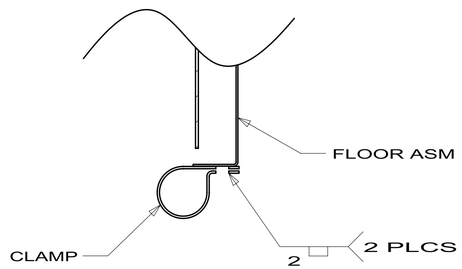

SECTION BB-BB

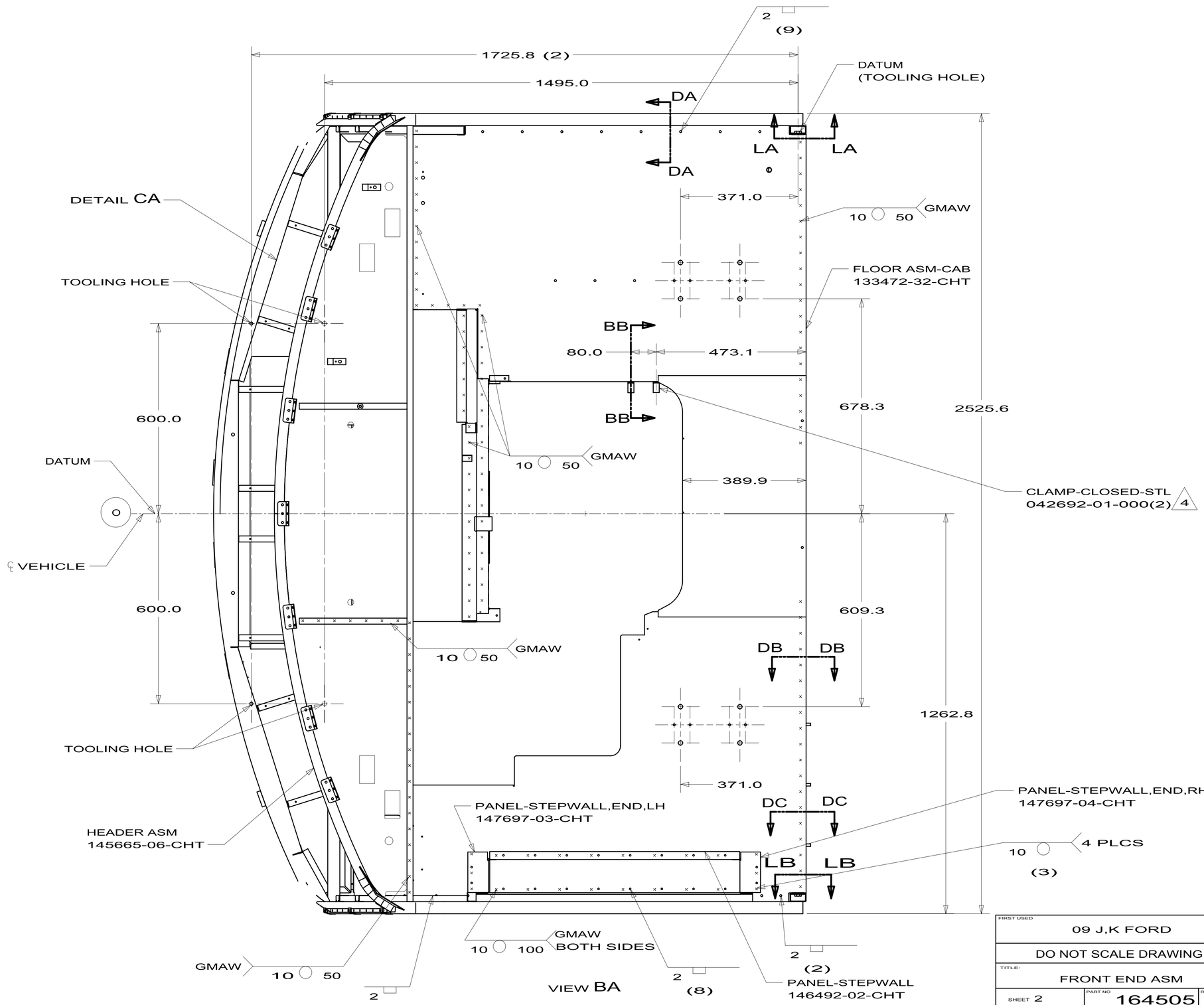

FIRST USED	09 J,K FORD
	DO NOT SCALE DRAWING
TITLE:	FRONT END ASM
SHEET 2	PART NO 164505 REV

2/23/2010

DWG NO 164505

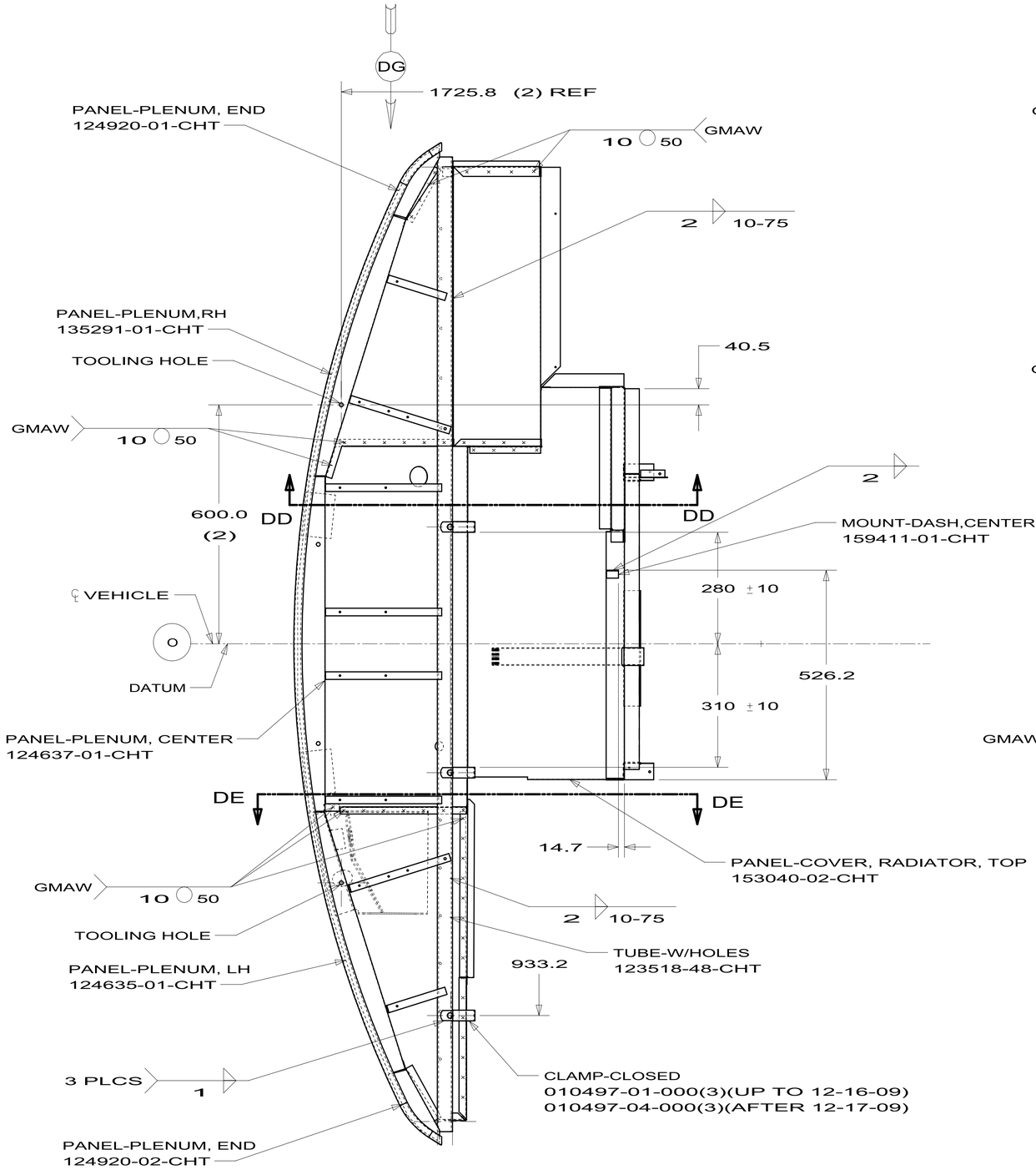

DETAIL CA

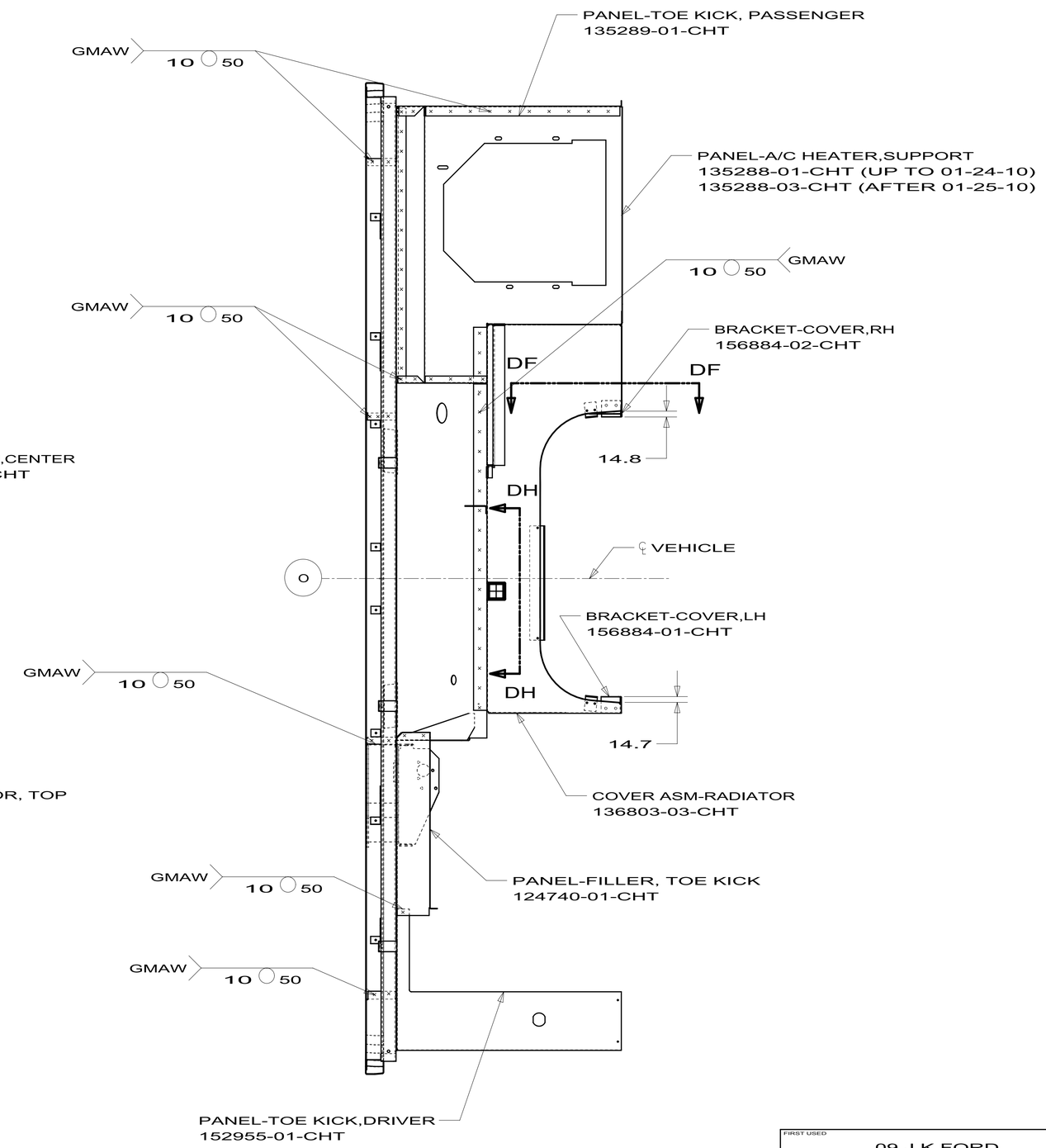

FIRST USED	09 J,K FORD
	DO NOT SCALE DRAWING
TITLE:	FRONT END ASM
SHEET 3	PART NO 164505 REV

2/23/2010

DWG NO 164505

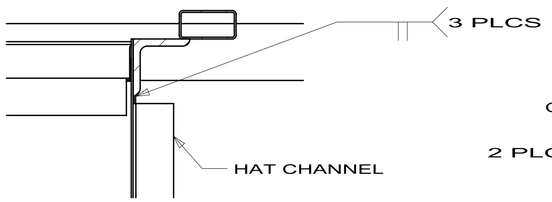

SECTION DA-DA

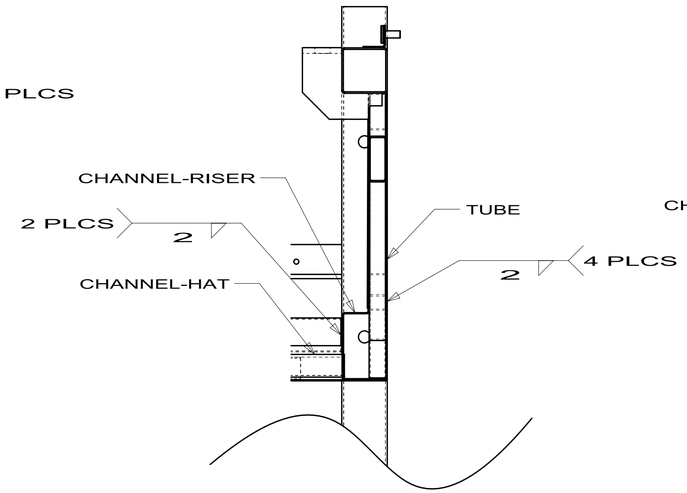

SECTION DB-DB

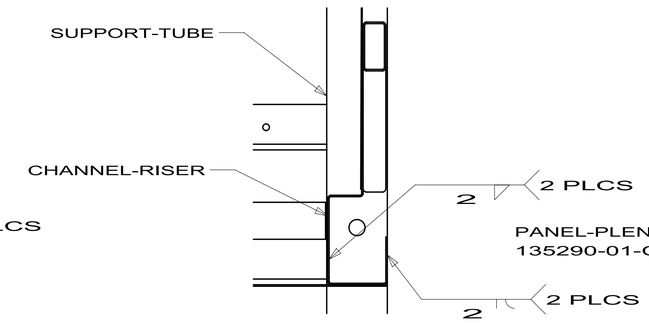

SECTION DC-DC

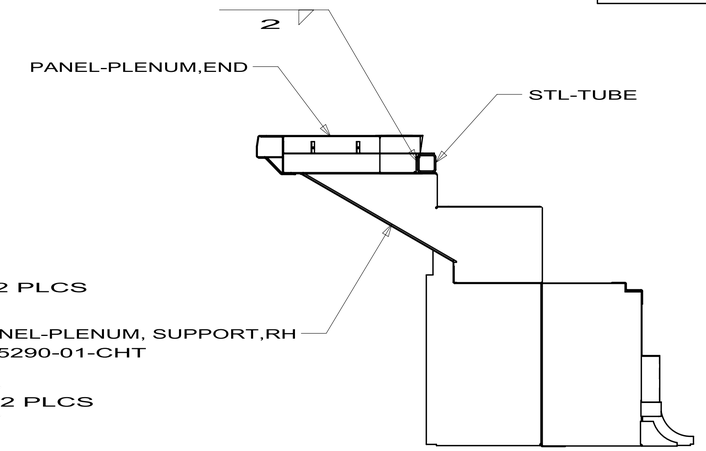

SECTION DD-DD

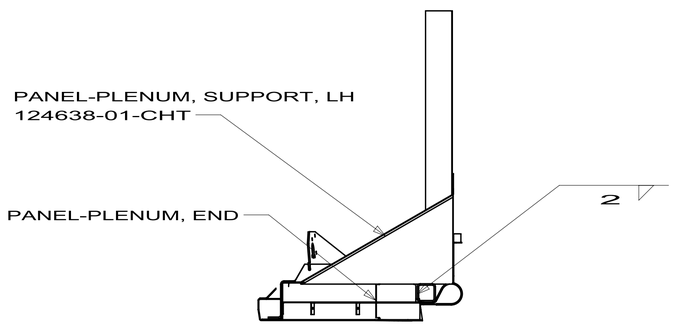

SECTION DE-DE

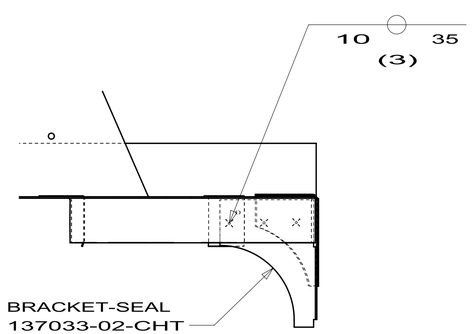

SECTION DF-DF

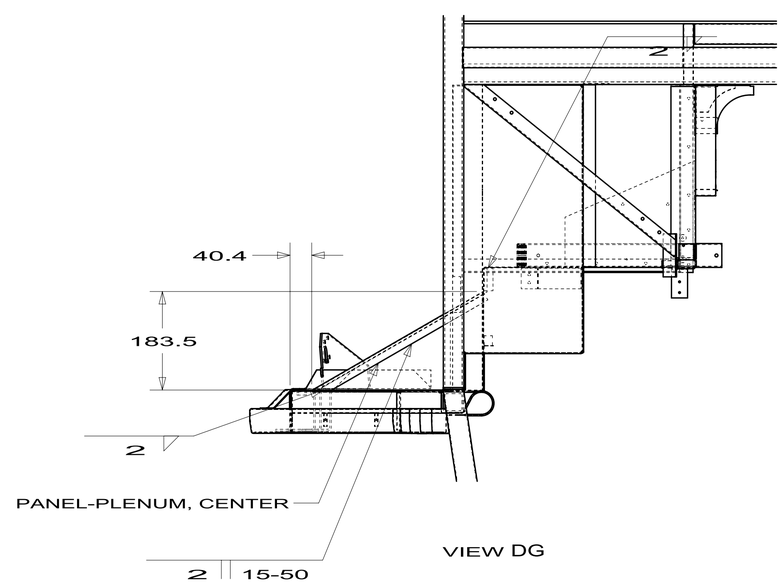

VIEW DG

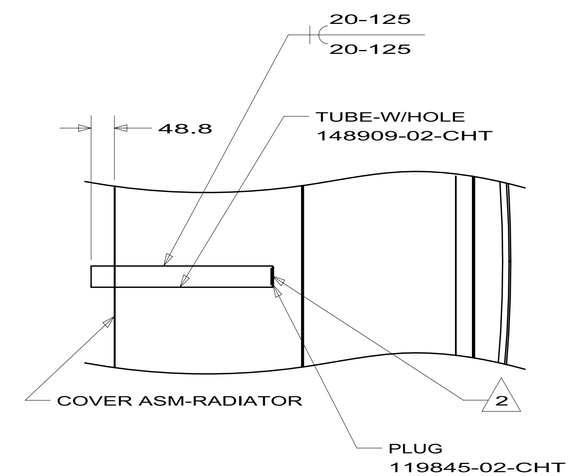

SECTION DH-DH

FIRST USED	09 J,K FORD
DO NOT SCALE DRAWING	
TITLE:	FRONT END ASM
SHEET 4	PART NO 164505 REV

2/23/2010

DWG NO 164505

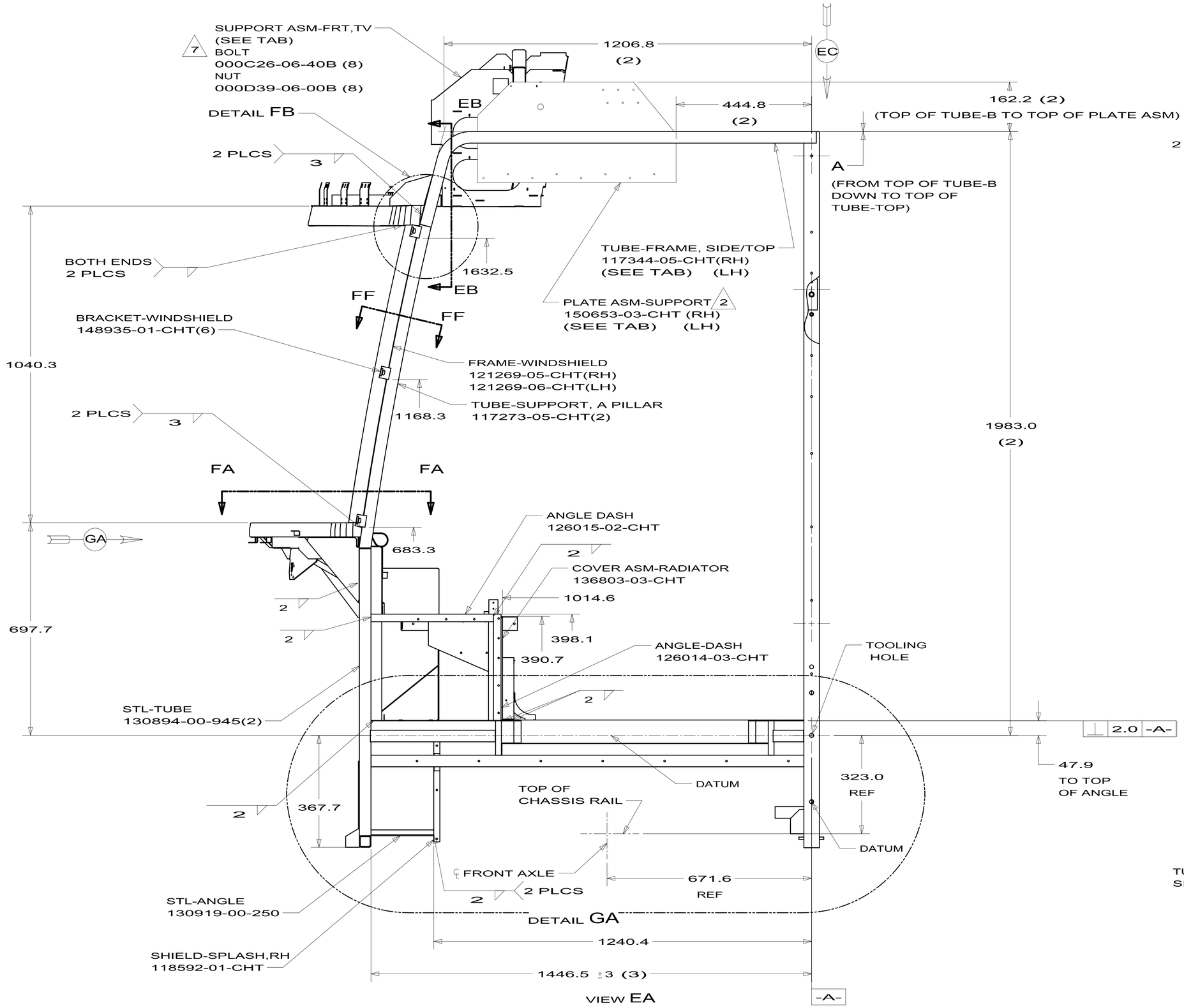

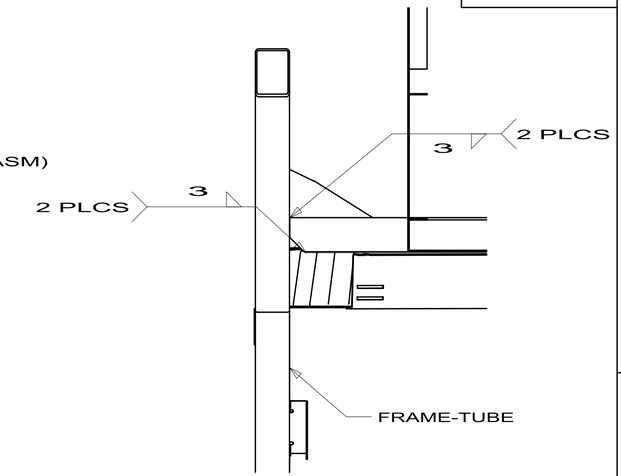

SECTION EB-EB

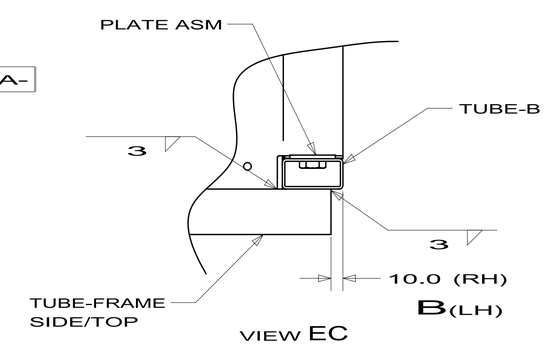

VIEW EC

FIRST USED	09 J,K FORD
	DO NOT SCALE DRAWING
TITLE:	FRONT END ASM
SHEET 5	PART NO 164505 REV

2/23/2010

DWG NO 164505

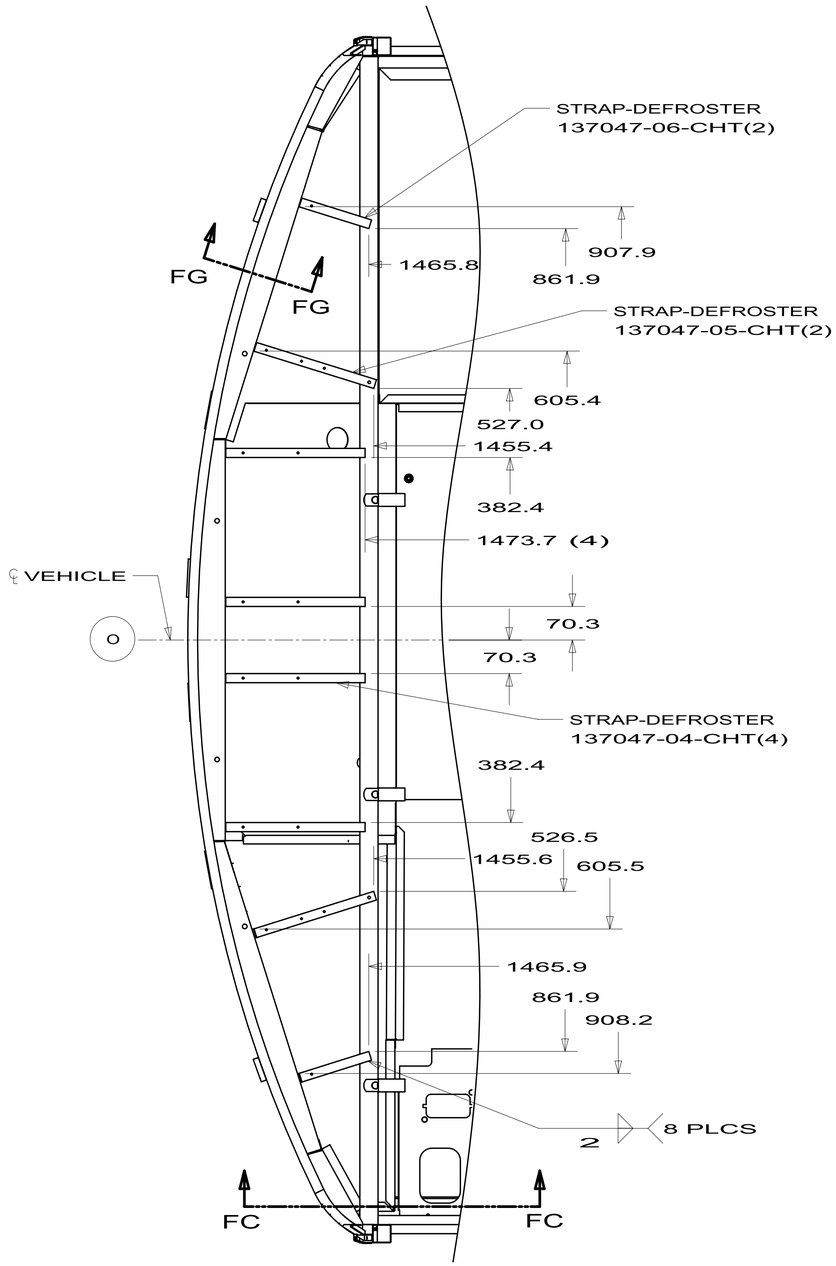

SECTION FA-FA

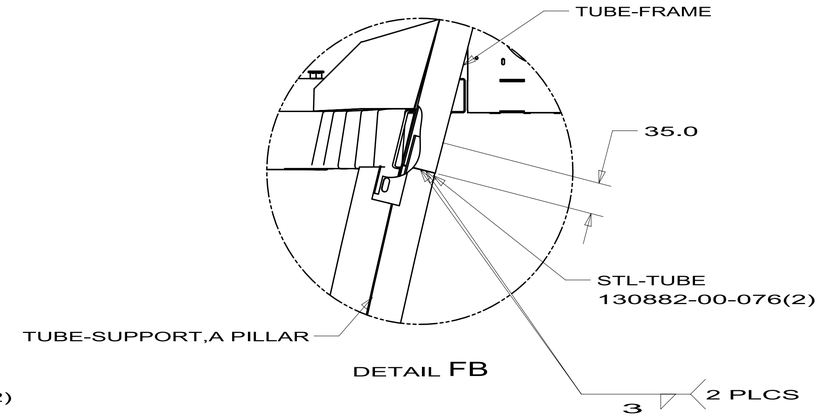

DETAIL FB

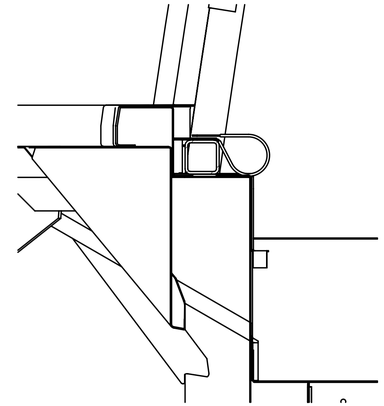

SECTION FC-FC

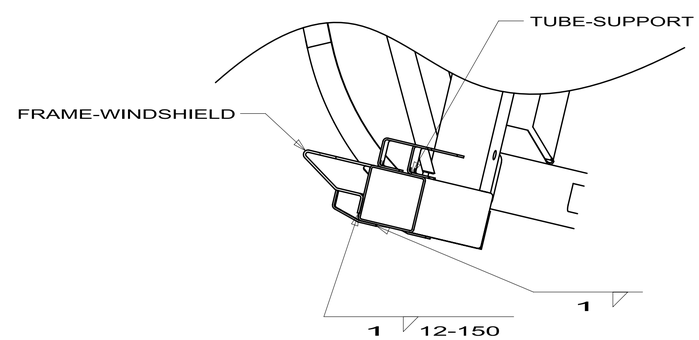

SECTION FF-FF

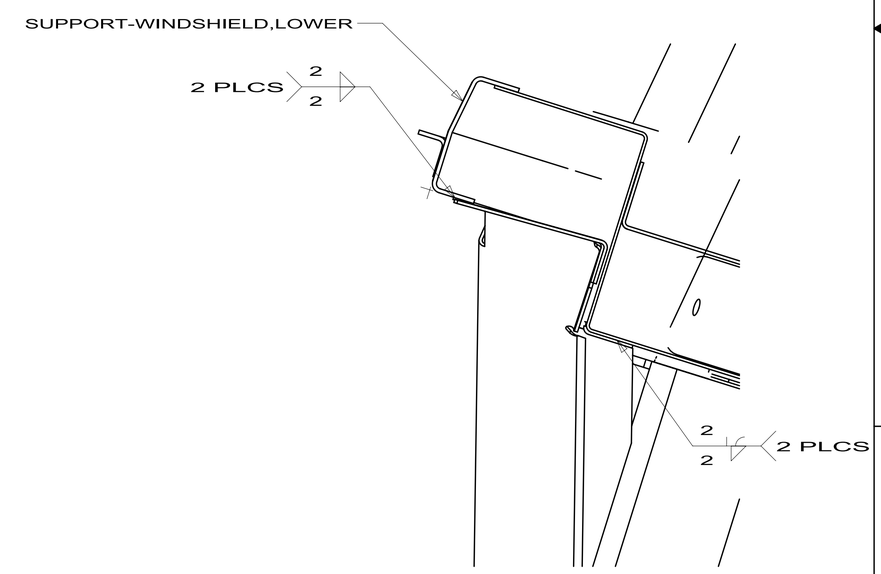

SECTION FG-FG

FIRST USED	09 J,K FORD
	DO NOT SCALE DRAWING
TITLE:	FRONT END ASM
SHEET 6	PART NO 164505 REV

2/23/2010

DWG NO 164505

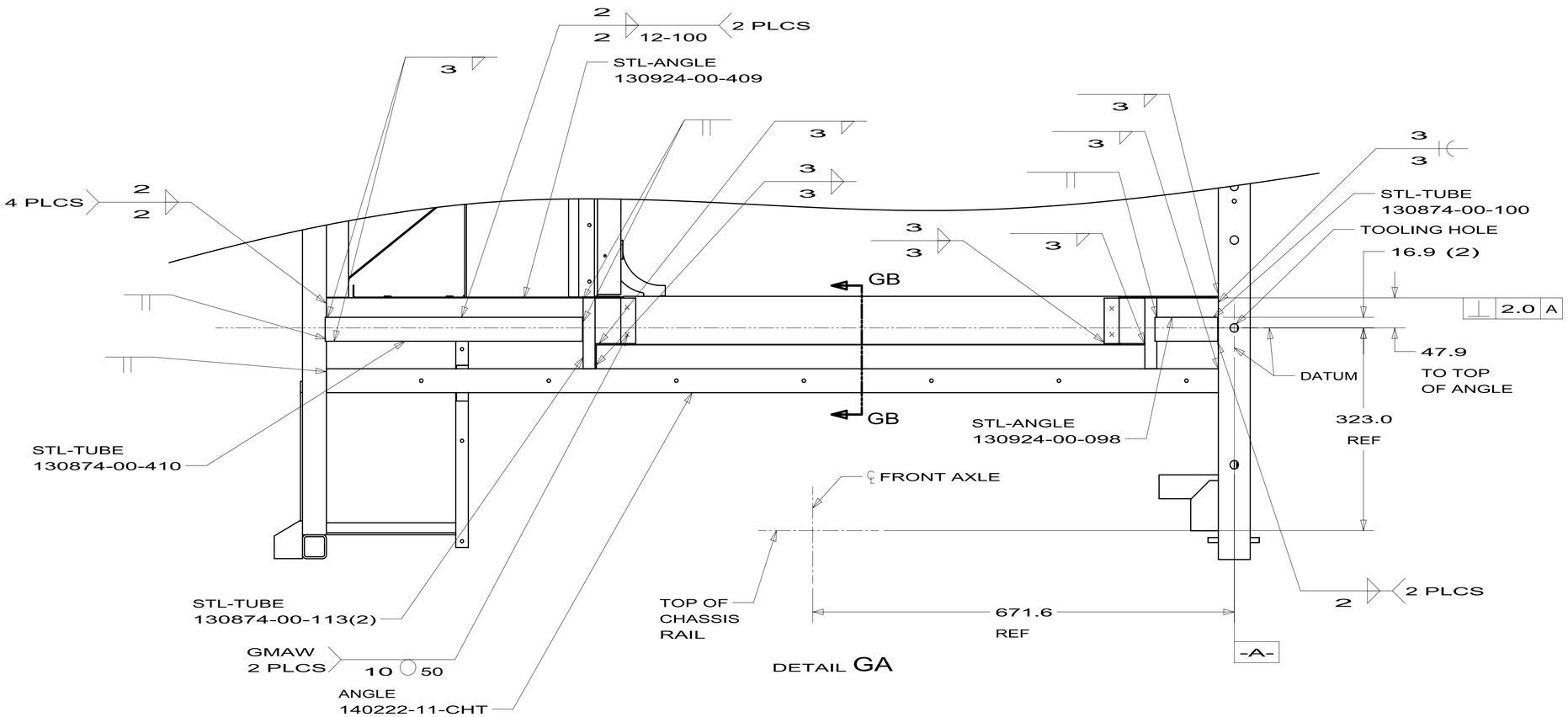

DETAIL GA

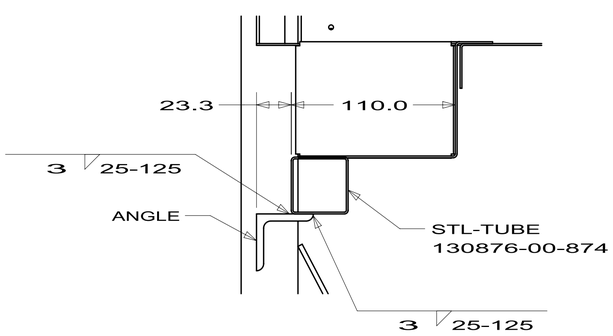

SECTION GB-GB

FIRST USED	09 J,K FORD
	DO NOT SCALE DRAWING
TITLE:	FRONT END ASM
SHEET 7	PART NO 164505 REV

2/23/2010

DWG NO 164505

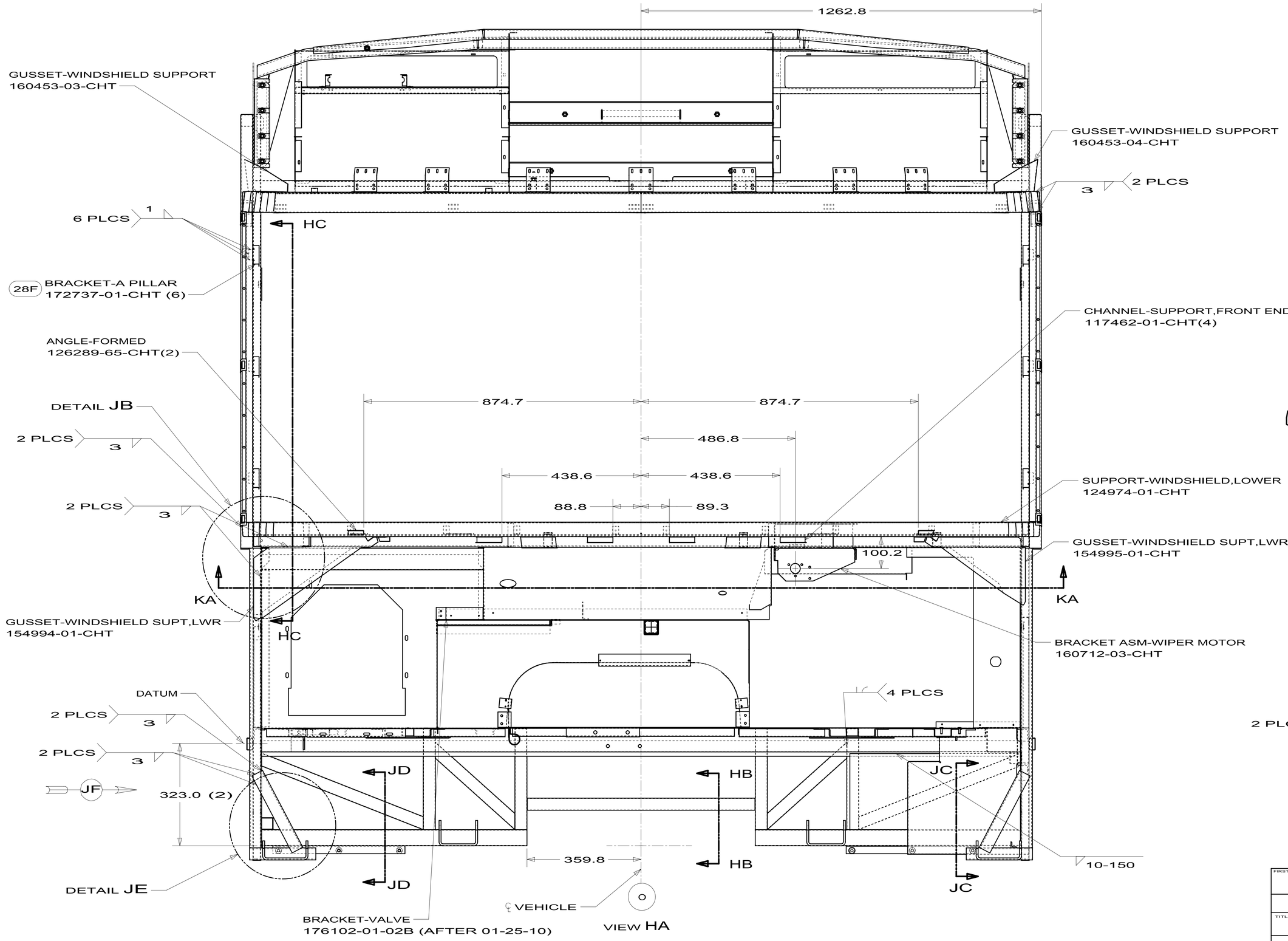

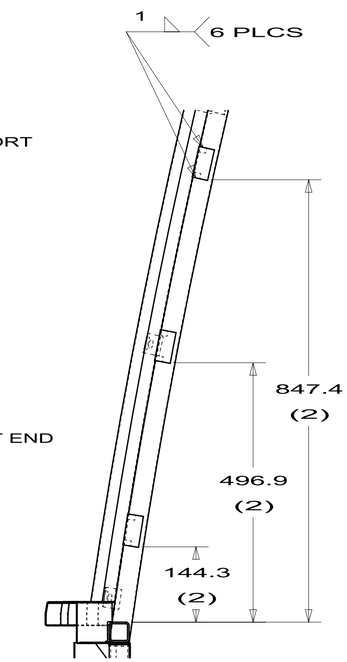

SECTION HC-HC

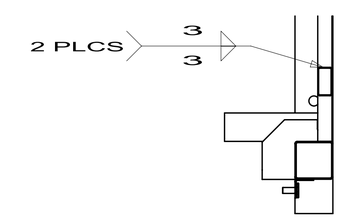

SECTION HB-HB

FIRST USED	09 J,K FORD
	DO NOT SCALE DRAWING
TITLE:	FRONT END ASM
SHEET 8	PART NO 164505 REV

2/23/2010

DWG NO 164505

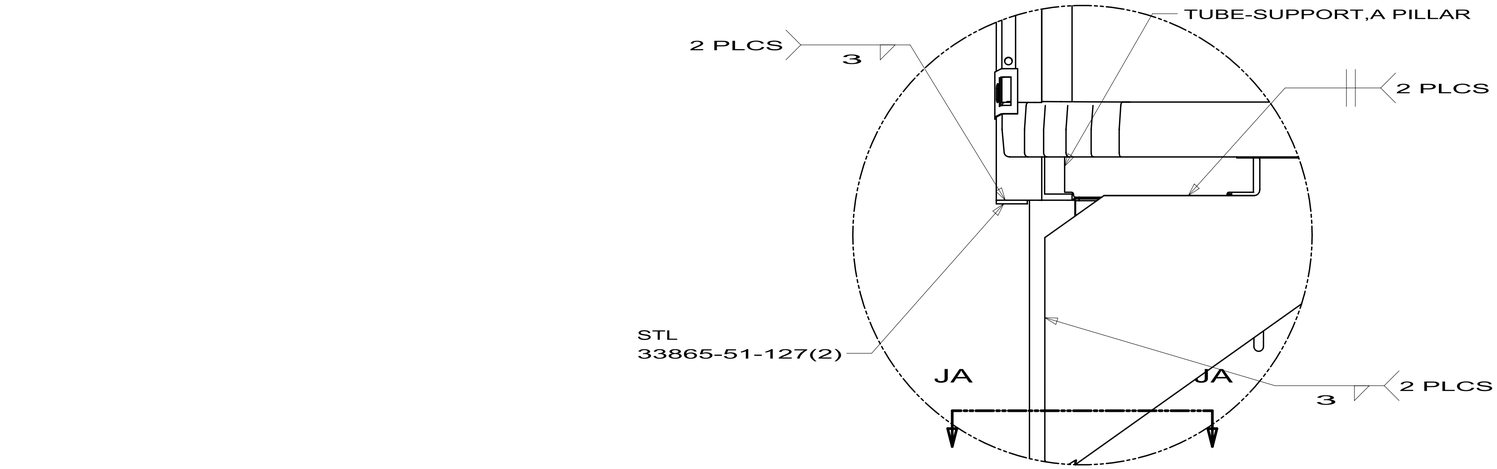

DETAIL JB

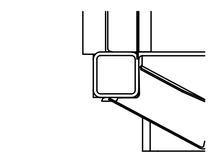

SECTION JA-JA

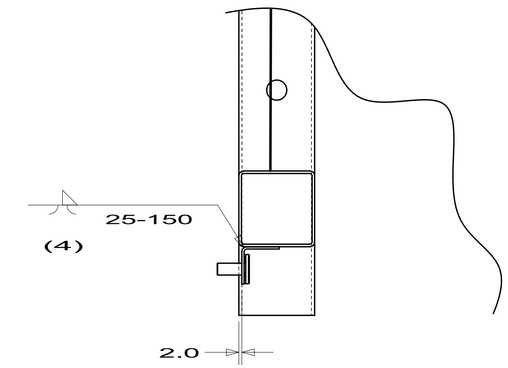

SECTION JC-JC

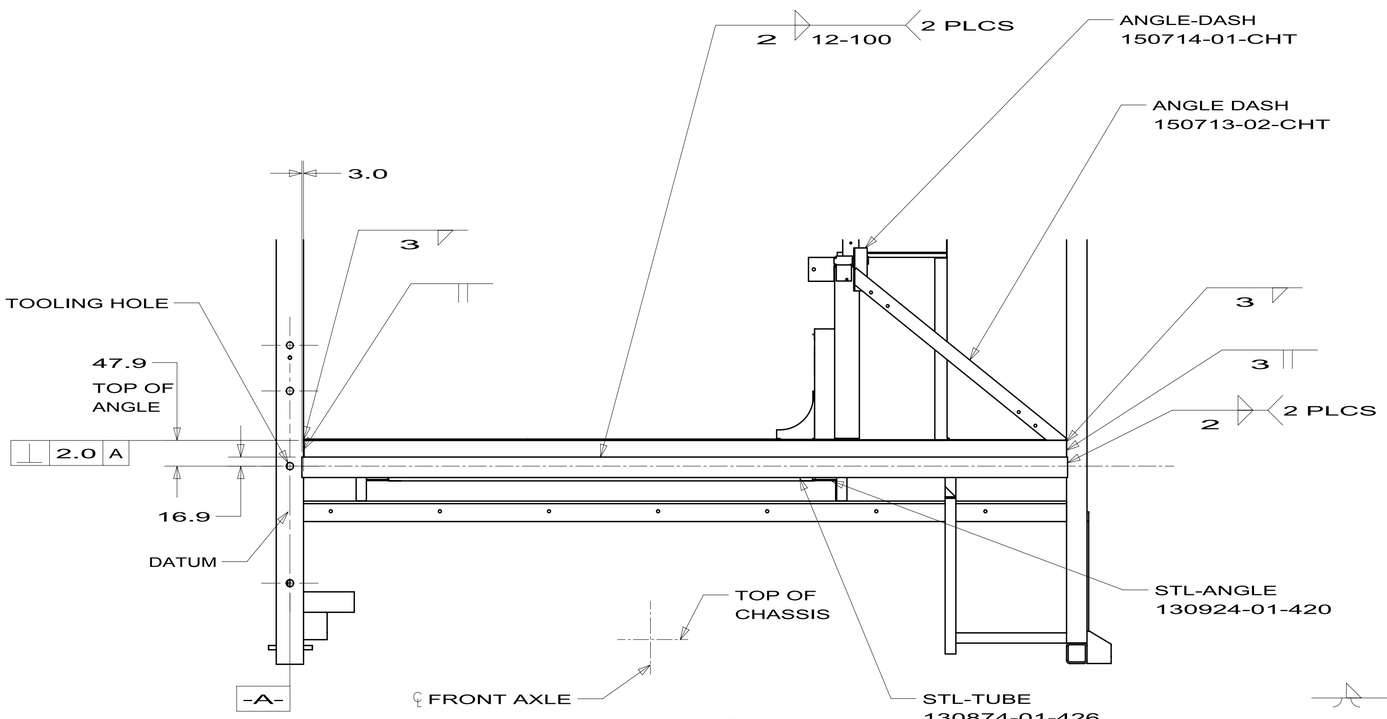

VIEW JF

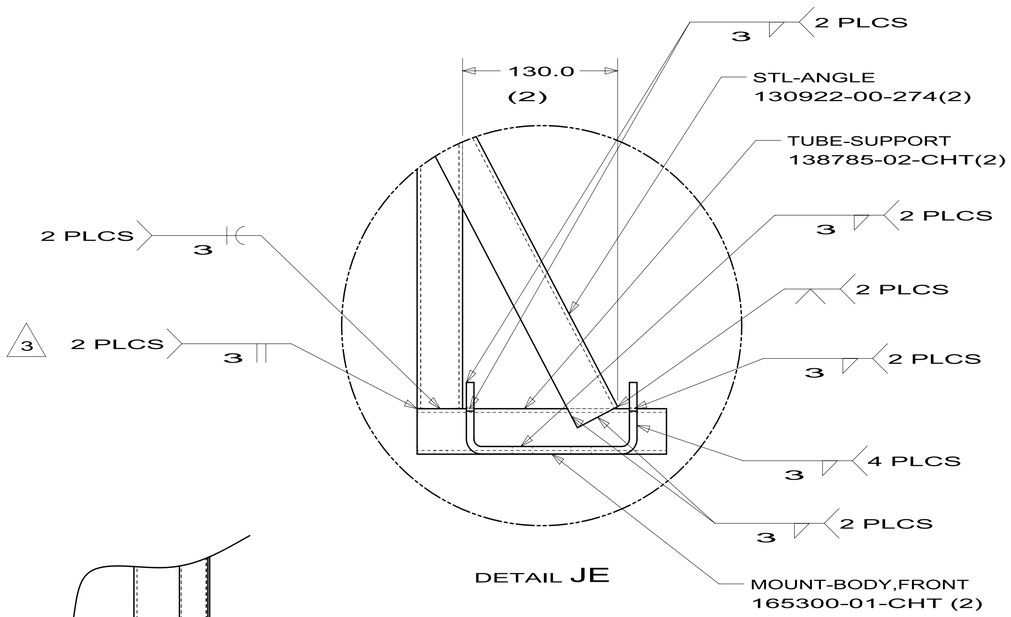

DETAIL JE

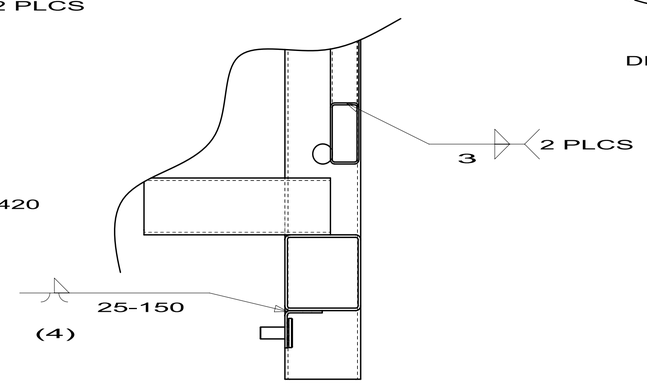

SECTION JD-JD

FIRST USED	09 J,K FORD
	DO NOT SCALE DRAWING
TITLE:	FRONT END ASM
SHEET 9	PART NO 164505 REV

2/23/2010

DWG NO 164505

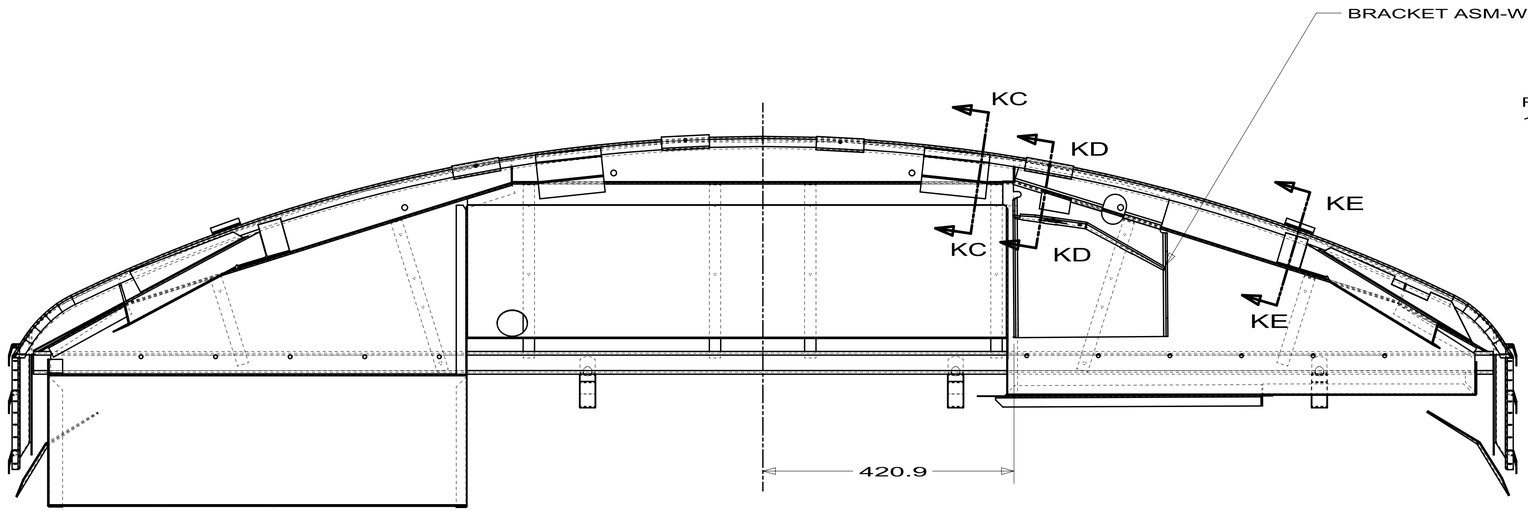

SECTION KA-KA

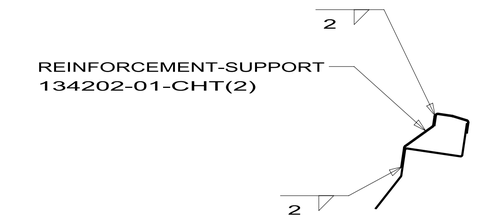

SECTION KC-KC
(2 PLCS)

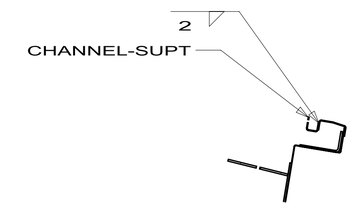

SECTION KD-KD
(4 PLCS)

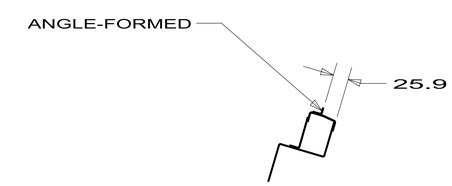

SECTION KE-KE
(2 PLCS)

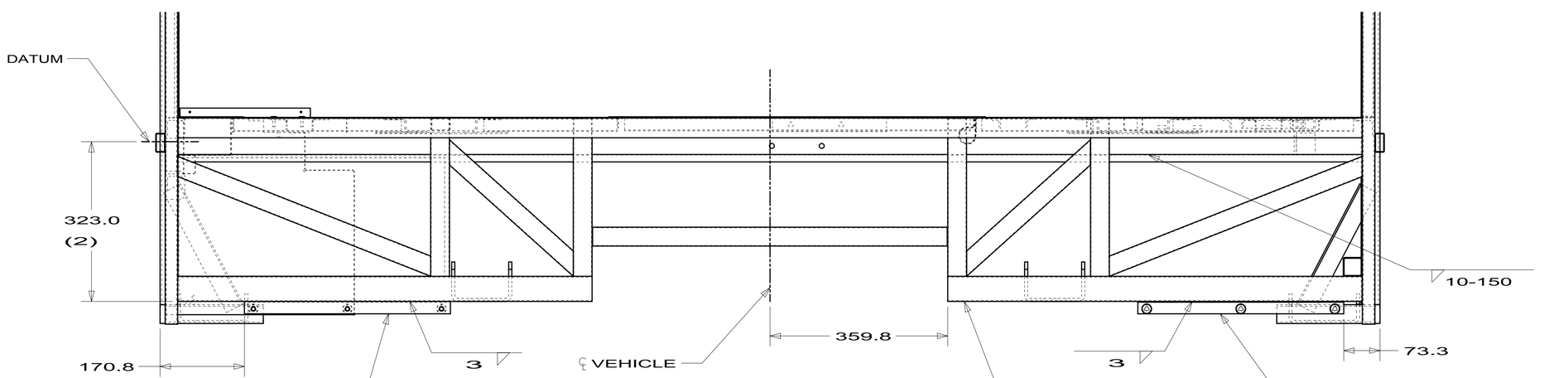

VIEW KB

FIRST USED	09 J,K FORD
	DO NOT SCALE DRAWING
TITLE:	FRONT END ASM
SHEET 10	PART NO 164505 REV

2/23/2010

DWG NO 164505

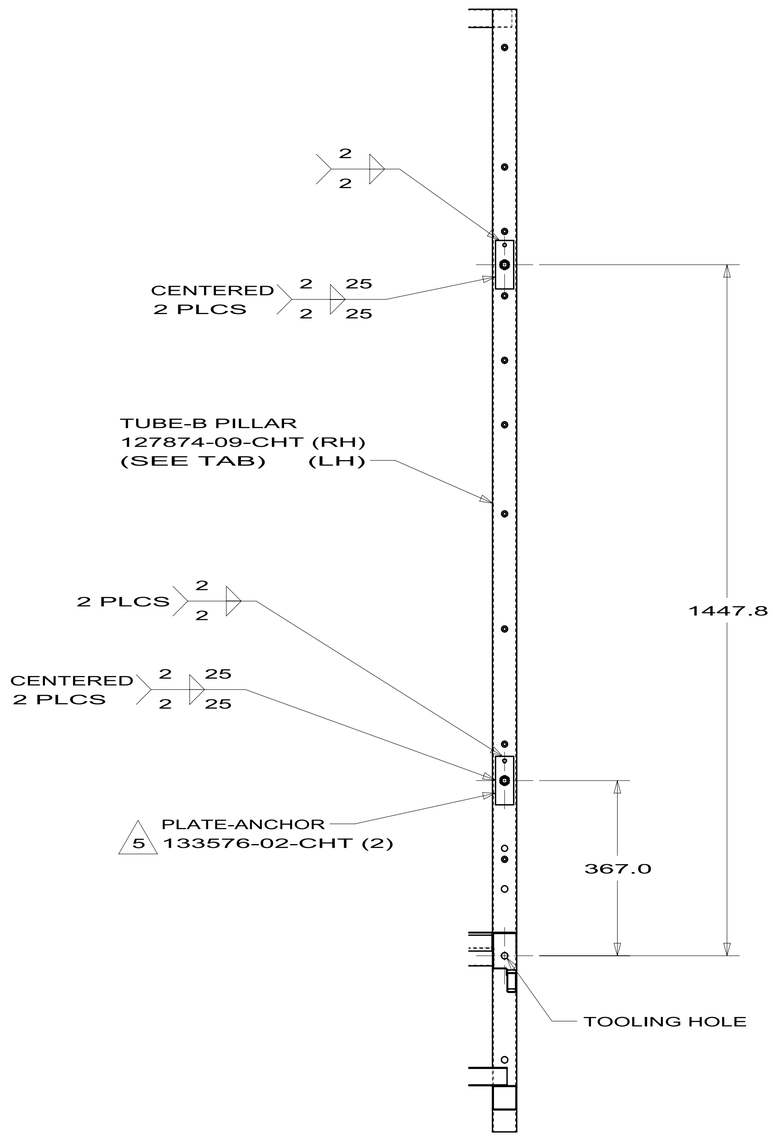

SECTION LA-LA
SHOWN
SECTION LB-LB
OPPOSITE

FIRST USED	09 J,K FORD
	DO NOT SCALE DRAWING
TITLE:	FRONT END ASM
SHEET 11	PART NO 164505 REV

2/23/2010

DWG NO	FRONT END ASM	DETAIL	VIEW		
164623-01	164624-01-CHT	DB	BA	NOT USED	
164623-02	164624-02-CHT	DC	BA	NOT USED	
164623-03	164624-03-CHT	DC	BA	W/O TV	J32H,J35P,J37F
164623-04	164624-04-CHT	DC	BA	W/O TV	J35Z,J38N
164623-05	164624-01-CHT	DB	EA	NOT USED	
164623-06	164624-02-CHT	DC	EA	NOT USED	
164623-07	164624-03-CHT	DC	EA	W/O TV	
164623-08	164624-04-CHT	DC	EA	NOT USED	
164623-09	164624-05-CHT	DC	BA	W/TV	J35Z
164623-10	164624-05-CHT	DC	EA	NOT USED	
164623-11	164624-06-CHT	DC	BA	NOT USED	
164623-12	164624-07-CHT	DC	BA	W/TV	J37F

RELEASE	REV A	DATE	DWG NO 164623
REV	ZONE	REVISION RECORD	DATE	DFTR-ORIG

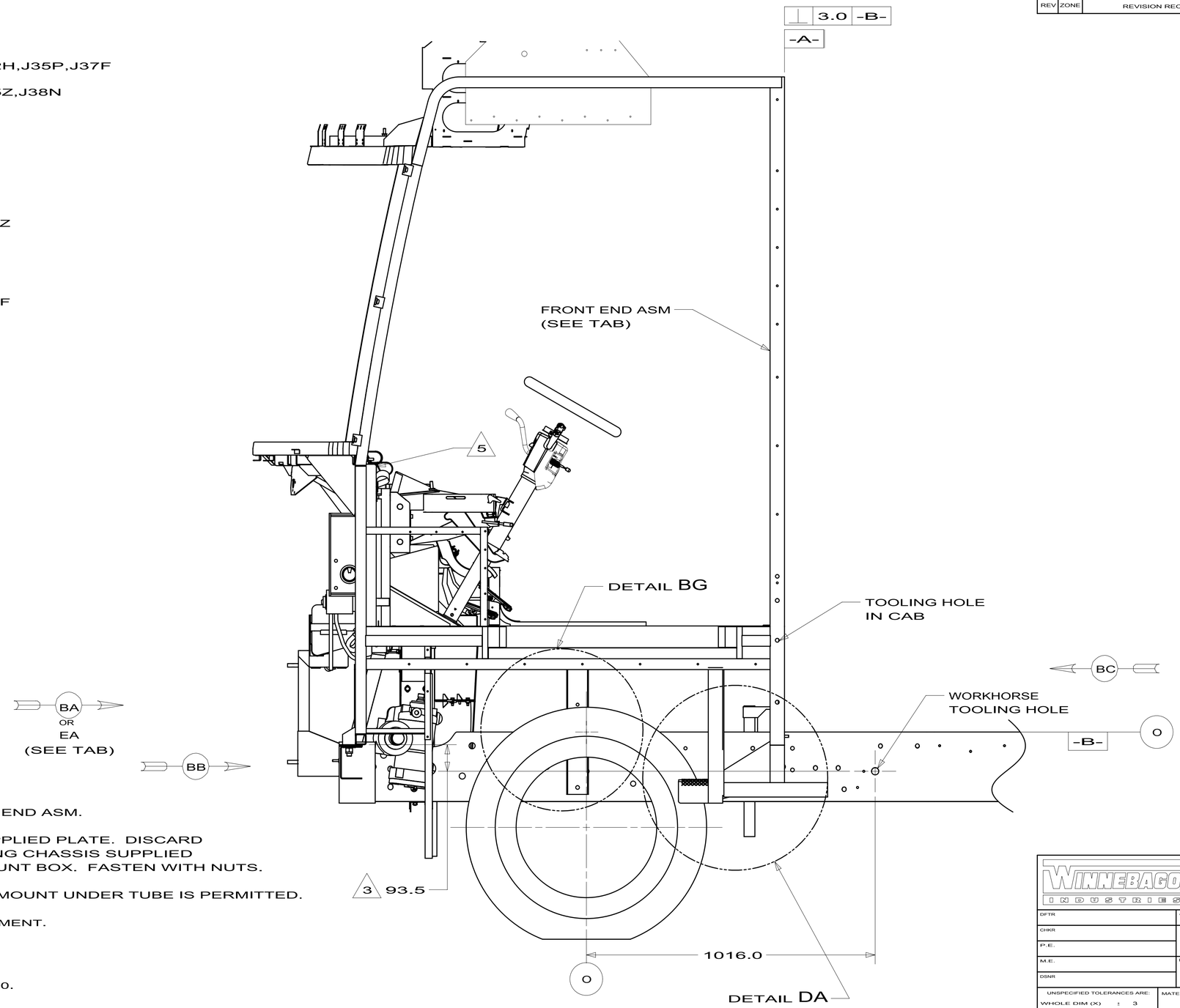

11. TORQUE TO: 191-209 Nm (143-157 FT LB).

10. ADD OR REMOVE SHIMS AS NEEDED TO LEVEL FRONT END ASM.

9. REMOVE FUSE BOX, RUBBER SEAL AND CHASSIS SUPPLIED PLATE. DISCARD CHASSIS SUPPLIED PLATE, INSTALL NEW PLATE USING CHASSIS SUPPLIED BOLTS, INSTALL RUBBER SEAL ONTO STUDS AND MOUNT BOX. FASTEN WITH NUTS.

8. WHEN REAR WELD IS INACCESSIBLE, WELDING BODY MOUNT UNDER TUBE IS PERMITTED.

7. UNBOLT AND WELD AS NEEDED AFTER PLATFORM ADJUSTMENT.

6. APPLY PUTTY SEALER, 111940-02, TO ANY SEAMS OR HOLES THAT NEED A FLEXIABLE DUST AND AIR SEAL.

5. FOR BRAKE INSTL-EMERGENCY SEE DWG NO 108080-01-000.

4. REMOVE RESERVOIR BRACKET (4 SCREWS) AND WELD TO WINNEBAGO BRACKET.

3. ADJUST HEIGHT OF SUPPORT TO LOCATE CAB PROPERLY.

2. SEAL ALL JOINTS BETWEEN PANELS AND CAB.

1. REMOVE ALL BURRS AND SHARP EDGES.

NOTES:

SEE CHART

FOR COLOR VARIATIONS OF THIS PART

COPYRIGHT 2009
WINNEBAGO
INDUSTRIES, INC.

DFTR	ORIG. DATE
CHKR	ALL DIMENSIONS ARE IN MILLIMETERS
P.E.	
M.E.	FIRST USED
DSNR	09 J,K WH

UNSPECIFIED TOLERANCES ARE:
WHOLE DIM (X) : 3
ONE-PLACE (X.X) : 1.5
TWO-PLACE (X.XX) : 0.50
ANGLE : 1°

MATERIAL:

THIRD ANGLE PROJECTION

DO NOT SCALE DRAWING

TITLE: FRONT END/CHASSIS ASM

SHEET 1 OF 5 | PART NO 164623 | REV

REF:

DWG NO 164623

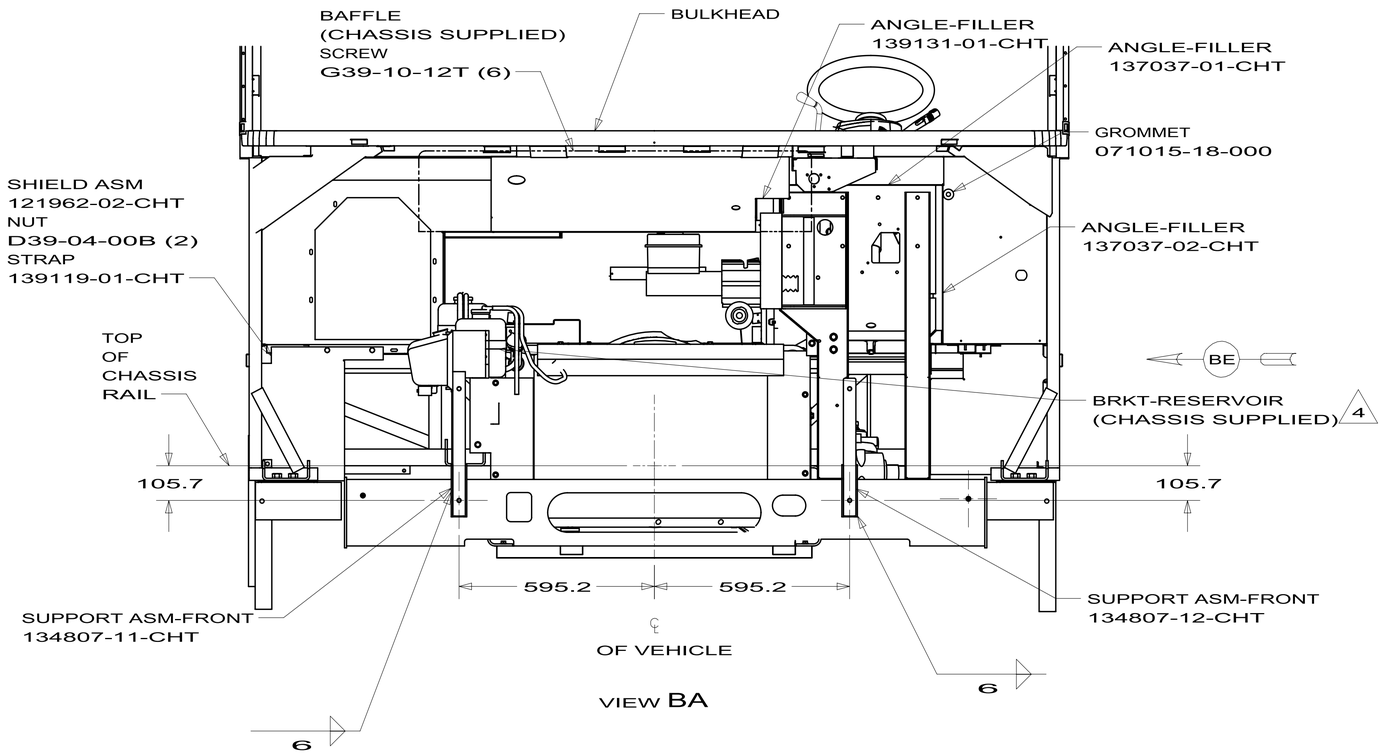

VIEW BA

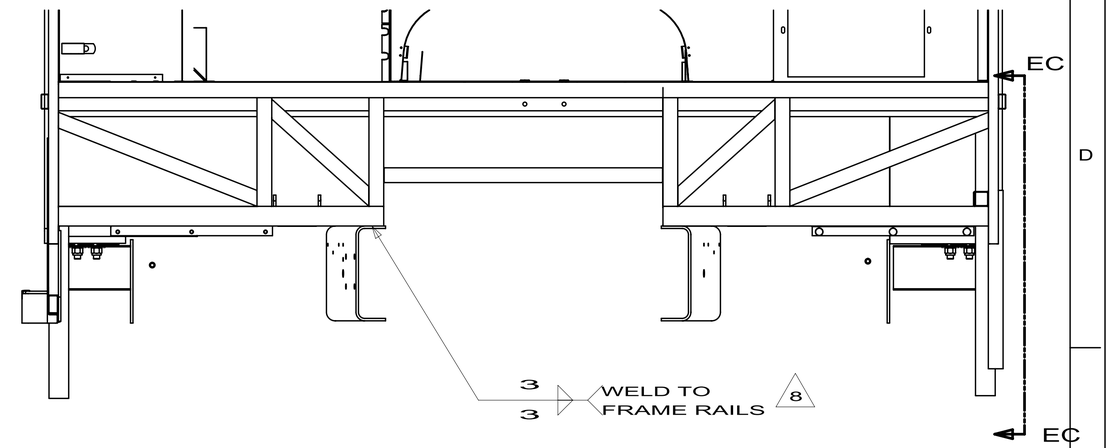

VIEW BC

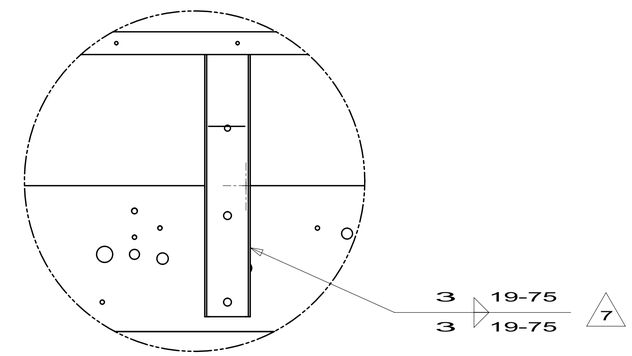

DETAIL BG

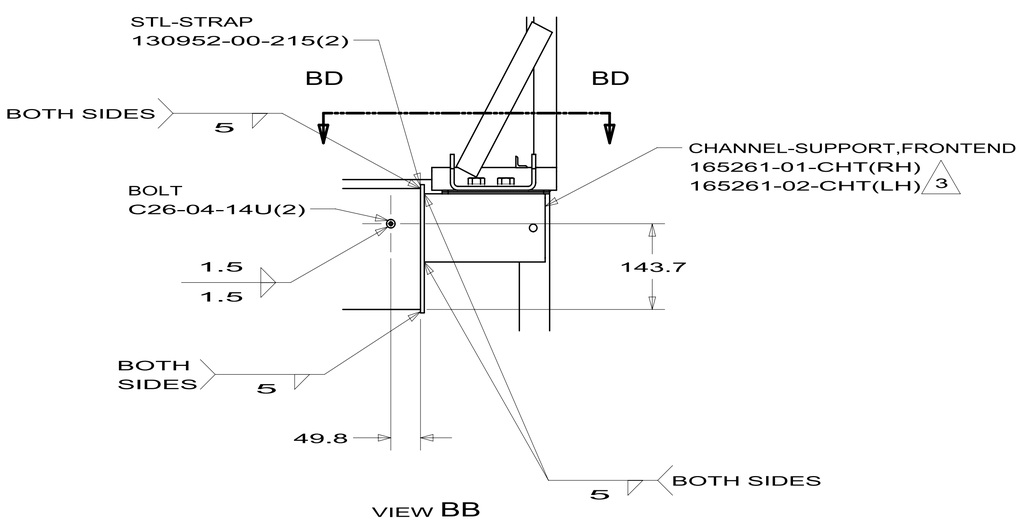

VIEW BB

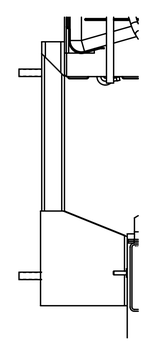

VIEW BF

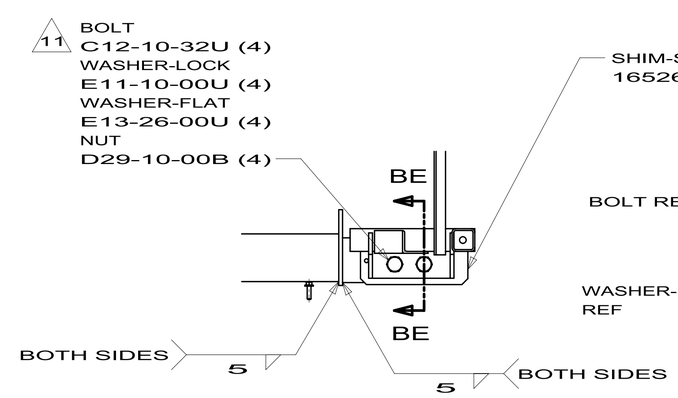

SECTION BD-BD

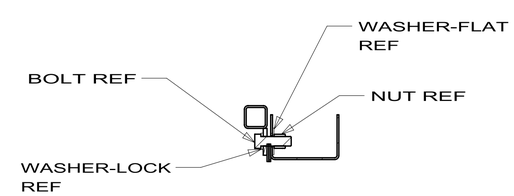

SECTION BE-BE

FIRST USED	09 J,K WH
	DO NOT SCALE DRAWING
TITLE:	FRONT END/CHASSIS ASM
SHEET 2	PART NO 164623 REV

DWG NO 164623

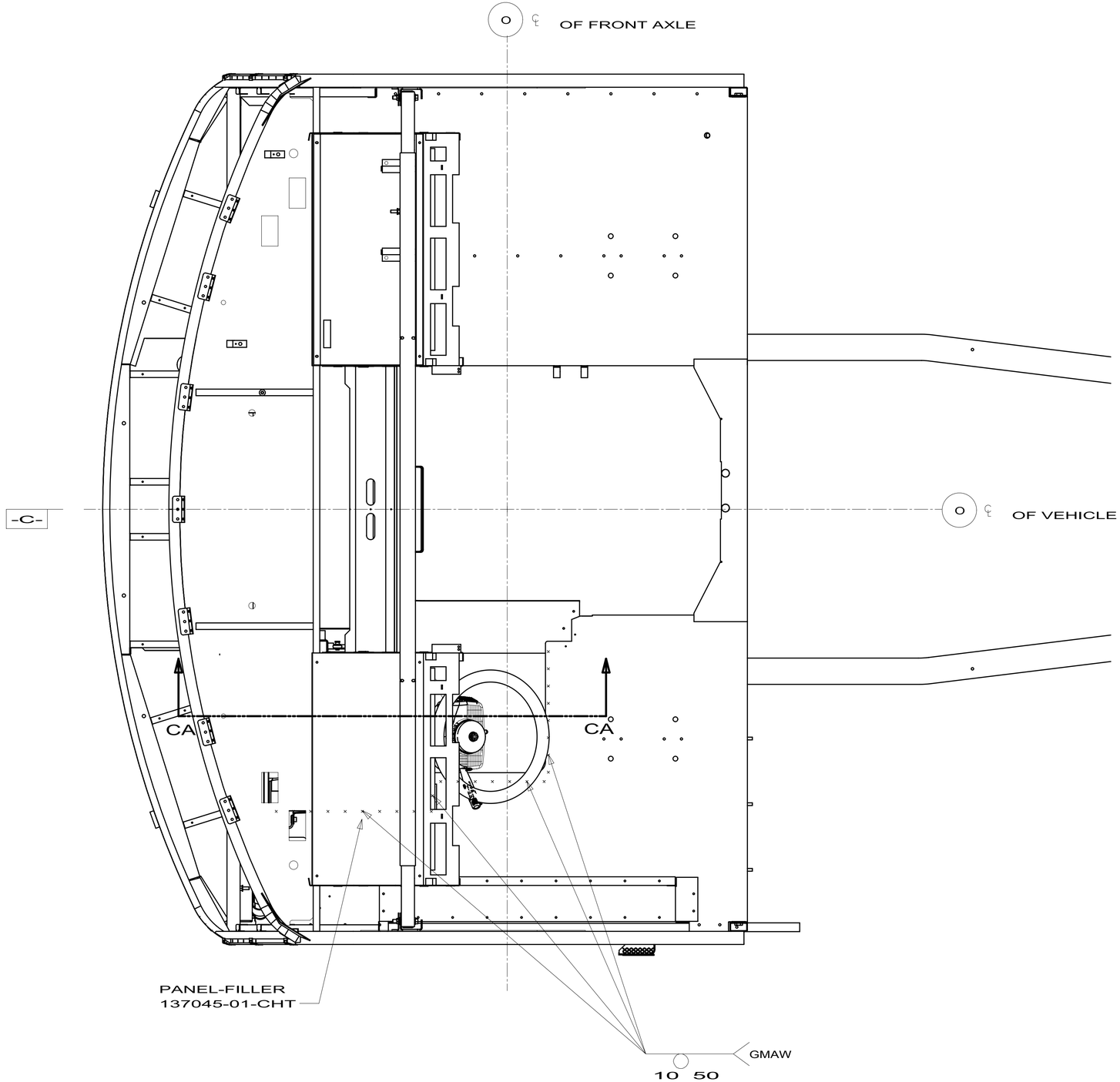

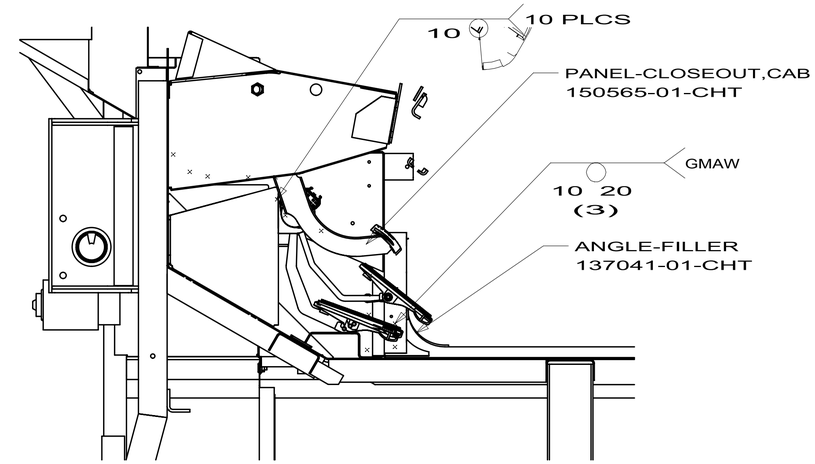

SECTION CA-CA

FIRST USED	09 J,K WH
DO NOT SCALE DRAWING	
TITLE:	FRONT END/CHASSIS ASM
SHEET 3	PART NO 164623 REV

DWG NO 164623

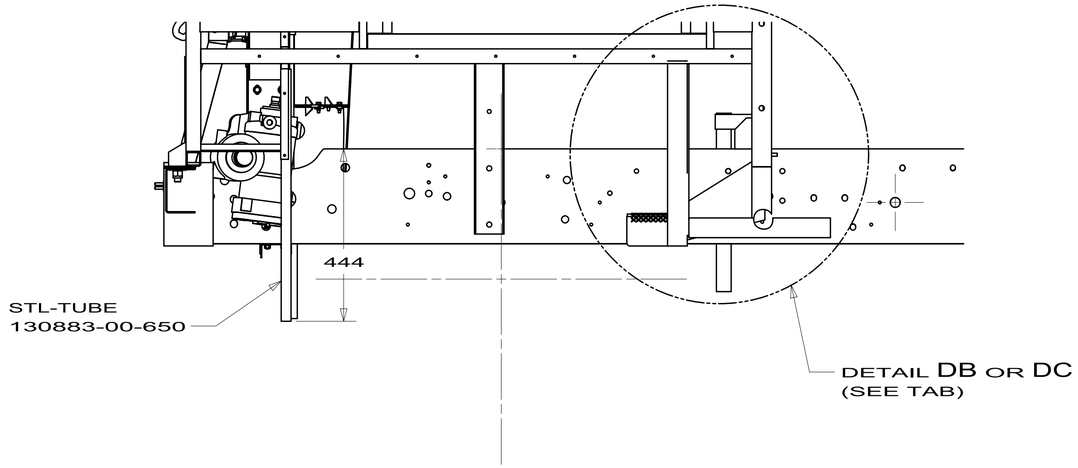

DETAIL DA

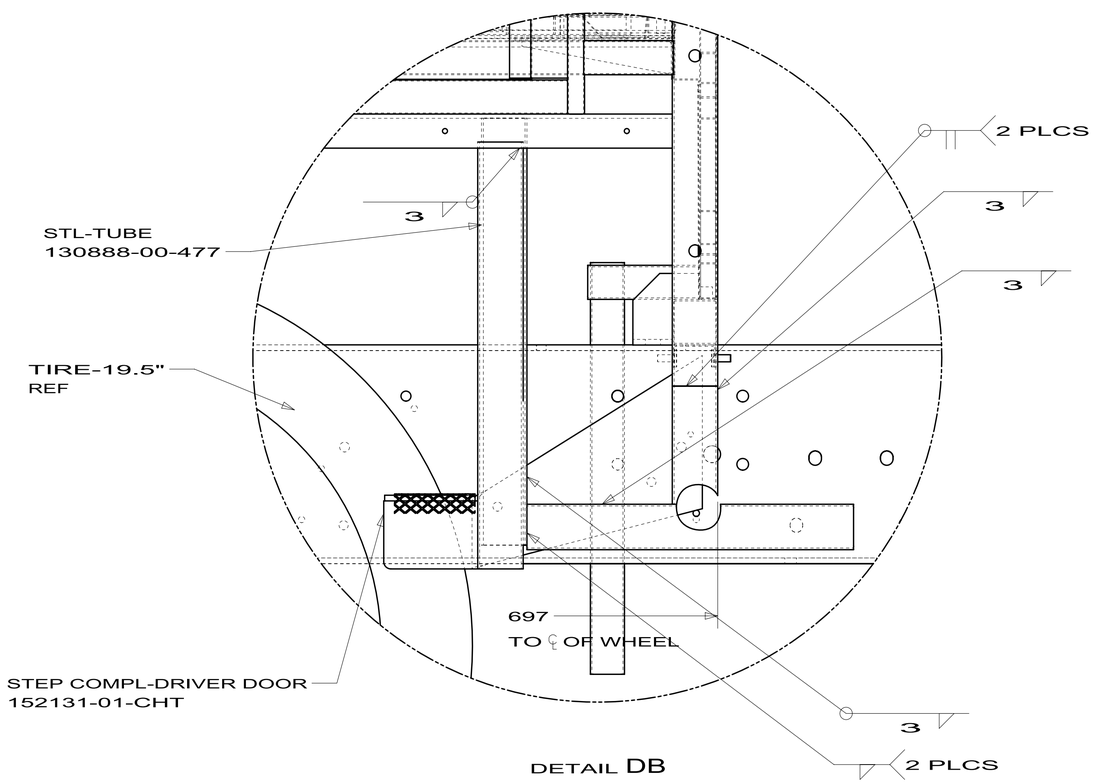

DETAIL DB

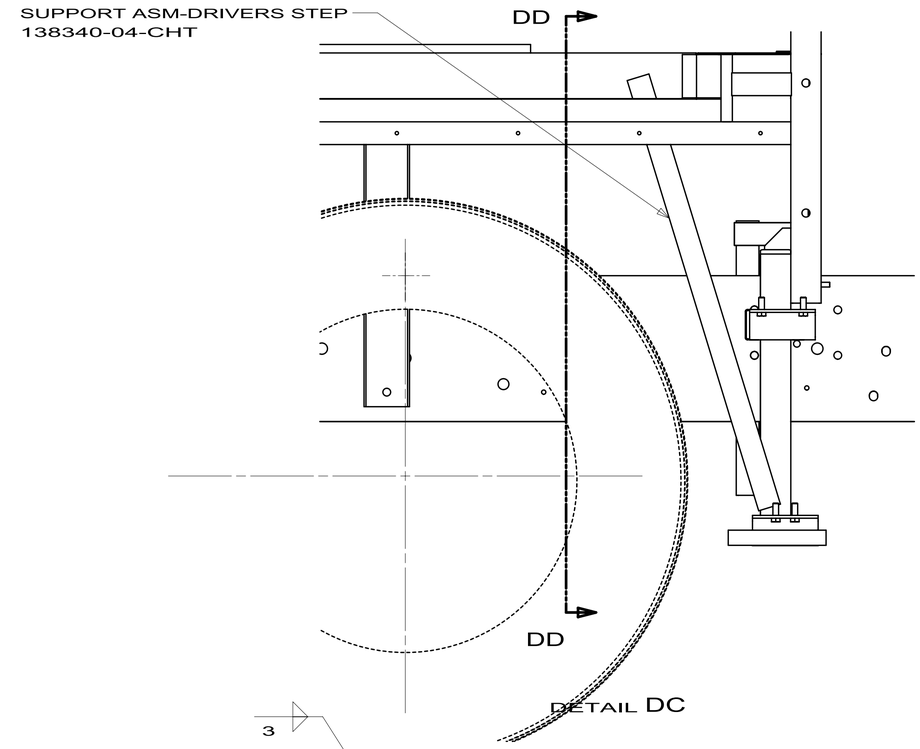

DETAIL DC

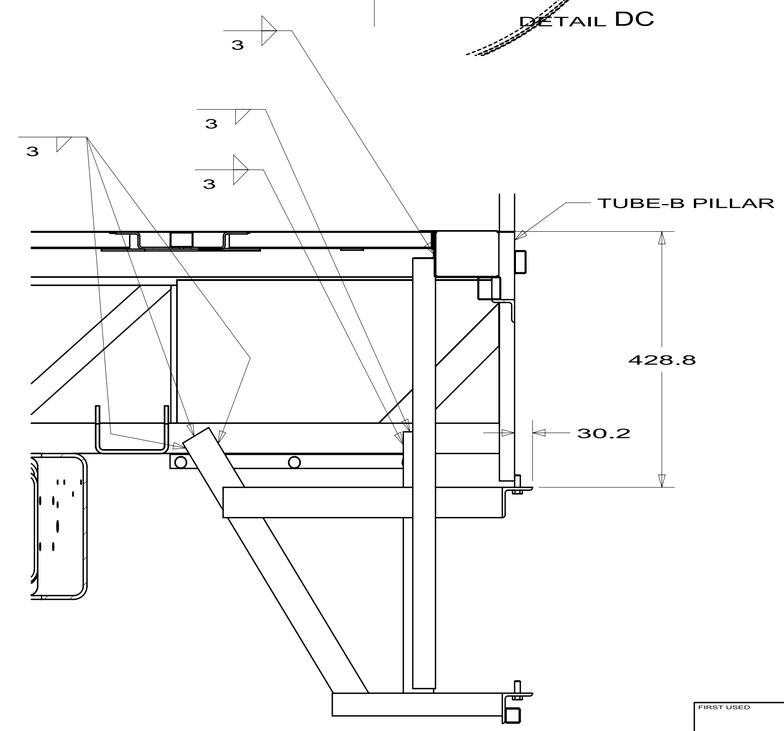

SECTION DD-DD

FIRST USED	09 J,K WH
DO NOT SCALE DRAWING	
TITLE:	FRONT END/CHASSIS ASM
SHEET 4	PART NO 164623 REV

DWG NO 164623

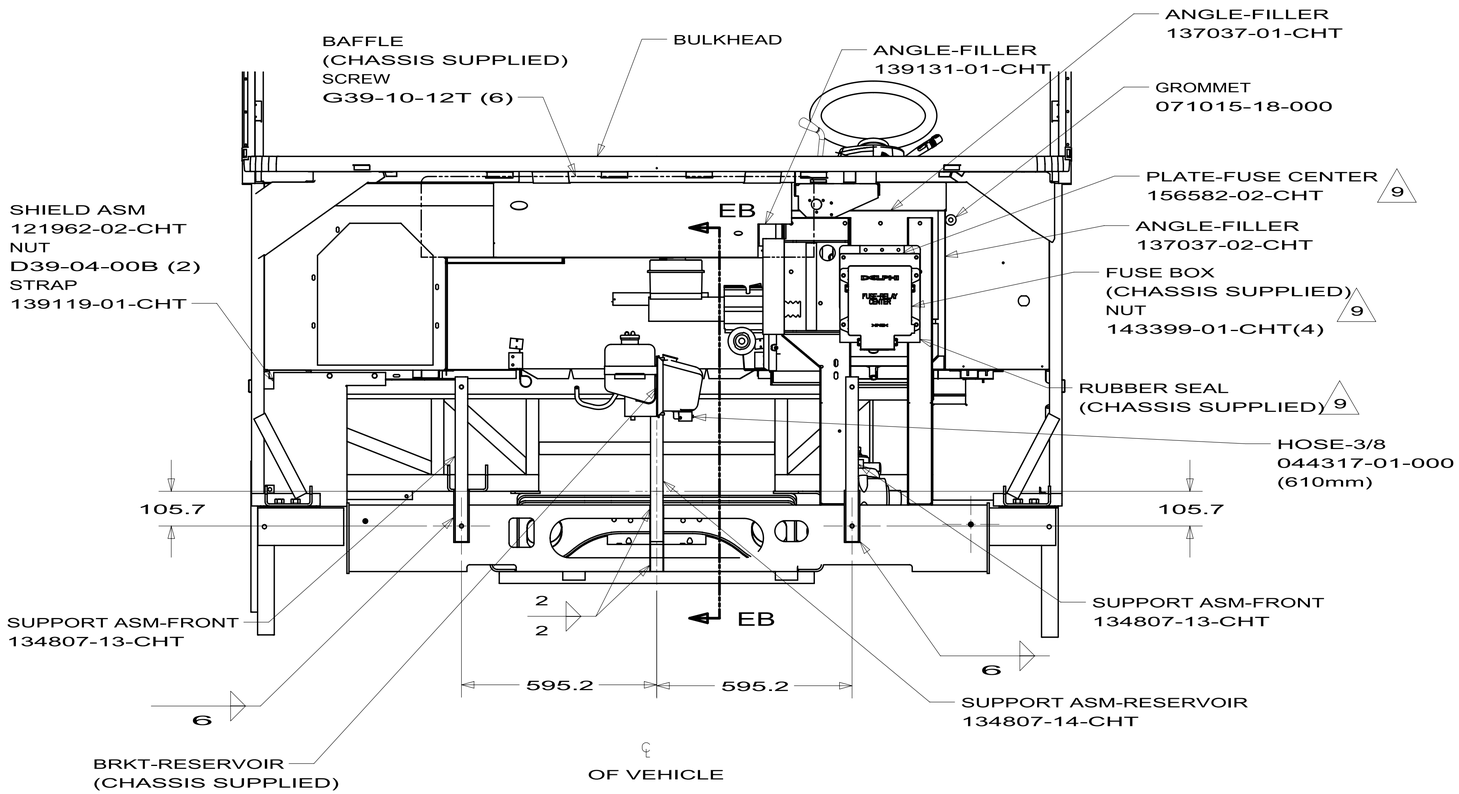

VIEW EA

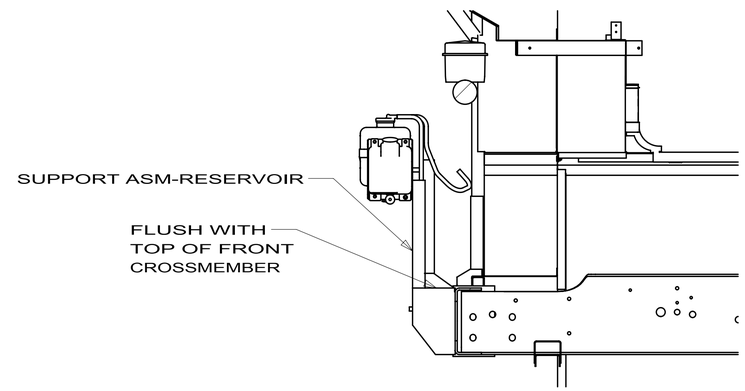

SECTION EB-EB

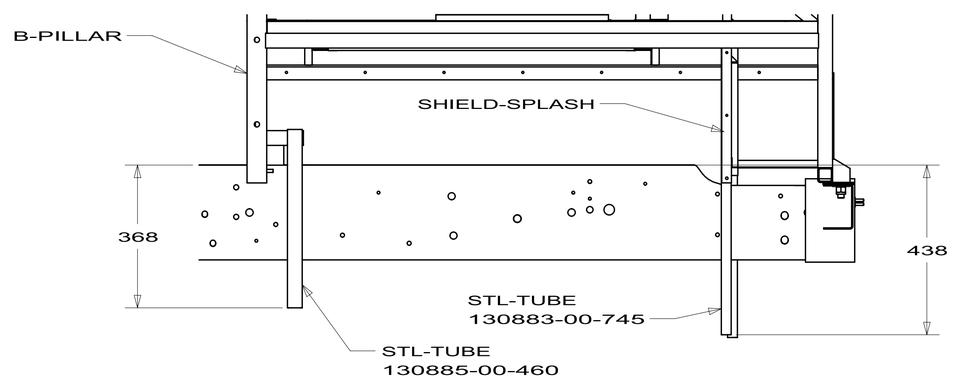

SECTION EC-EC

FIRST USED	09 J,K WH
	DO NOT SCALE DRAWING
TITLE:	FRONT END/CHASSIS ASM
SHEET 5	PART NO 164623 REV

DWG NO	LH B PILLAR	RISER ASM-CAB	SUPPORT ASM-TV	TUBE-TOP,LH	PLATE ASM-LH	A	B	
164624-01	127874-09-CHT	145125-10-CHT	151975-03-CHT	117344-05-CHT	150653-04-CHT	0.0	10.0	NOT USED
164624-02	127874-10-CHT	145125-07-CHT	151975-03-CHT	117344-05-CHT	150653-04-CHT	0.0	10.0	J35Z
164624-03	127874-10-CHT	145125-07-CHT	151975-02-CHT	117344-10-CHT	150653-07-CHT	34.0	40.0	J32H, J37F, K32H, K35P
164624-04	127874-10-CHT	145125-07-CHT	151975-02-CHT	117344-05-CHT	150653-04-CHT	0.0	10.0	J38N
164624-05	127874-10-CHT	145125-07-CHT	151975-04-CHT	117344-05-CHT	150653-04-CHT	0.0	10.0	J35Z 42K

RELEASE	REV A	DATE	DWG NO 164624
REV	ZONE	REVISION RECORD	DATE	DFTR-ORIG

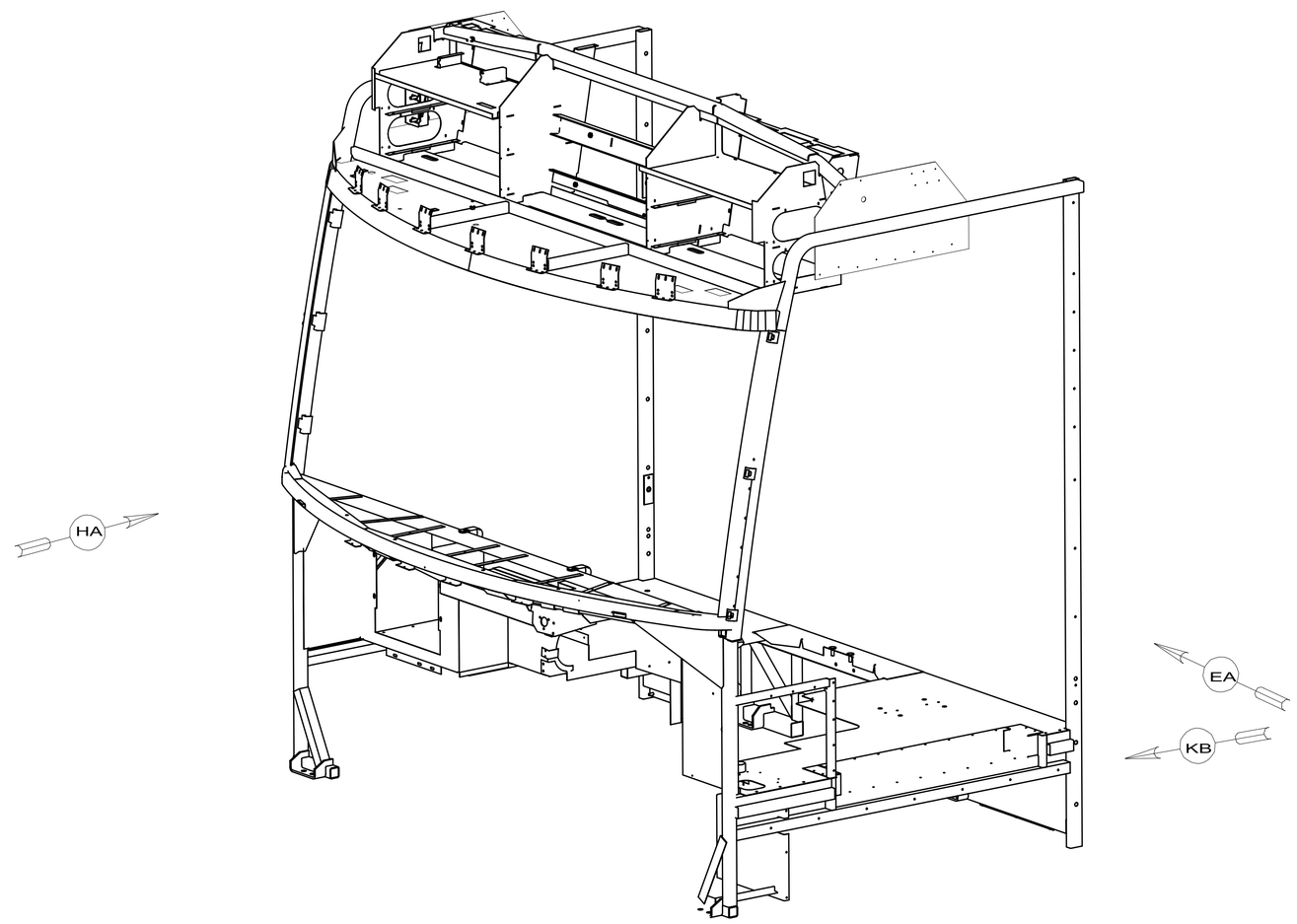

7. TORQUE BOLT TO 34 FT-LBS.

6. SEAL WITH SEALANT II0744-C3-000 AFTER E-COAT.

5. ALIGN HOLES.

4. HOLES MUST ALIGN TO ALLOW FREE PASSAGE OF A #10 SCREW.

3. MUST BE FLUSH WITHIN ± 1.5.

2. ATTACH AFTER E-COAT.

1. CLEAN, E-COAT AND SEAL CAB WITH 143201-01-000.

NOTES:

SEE CHART

FOR COLOR VARIATIONS OF THIS PART

COPYRIGHT 2010
WINNEBAGO
INDUSTRIES, INC.

DFTR	ORIG. DATE
CHKR	ALL DIMENSIONS ARE IN MILLIMETERS
P.E.	
M.E.	FIRST USED
DSNR	09 J,K WH
UNSPECIFIED TOLERANCES ARE: WHOLE DIM (X) : 3; ONE-PLACE (X.X) : 1.5; TWO-PLACE (X.XX) : 0.50; ANGLE : 1°	MATERIAL:
THIRD ANGLE PROJECTION	
DO NOT SCALE DRAWING	REFER TO ES0018 FOR FASTENER TIGHTENING GUIDELINES
TITLE: FRONT END ASM	
SHEET 1 OF 11	PART NO 164624	REV

REF: 1

2/23/2010

DWG NO 164624

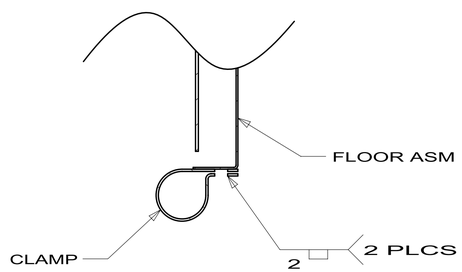

SECTION BB-BB

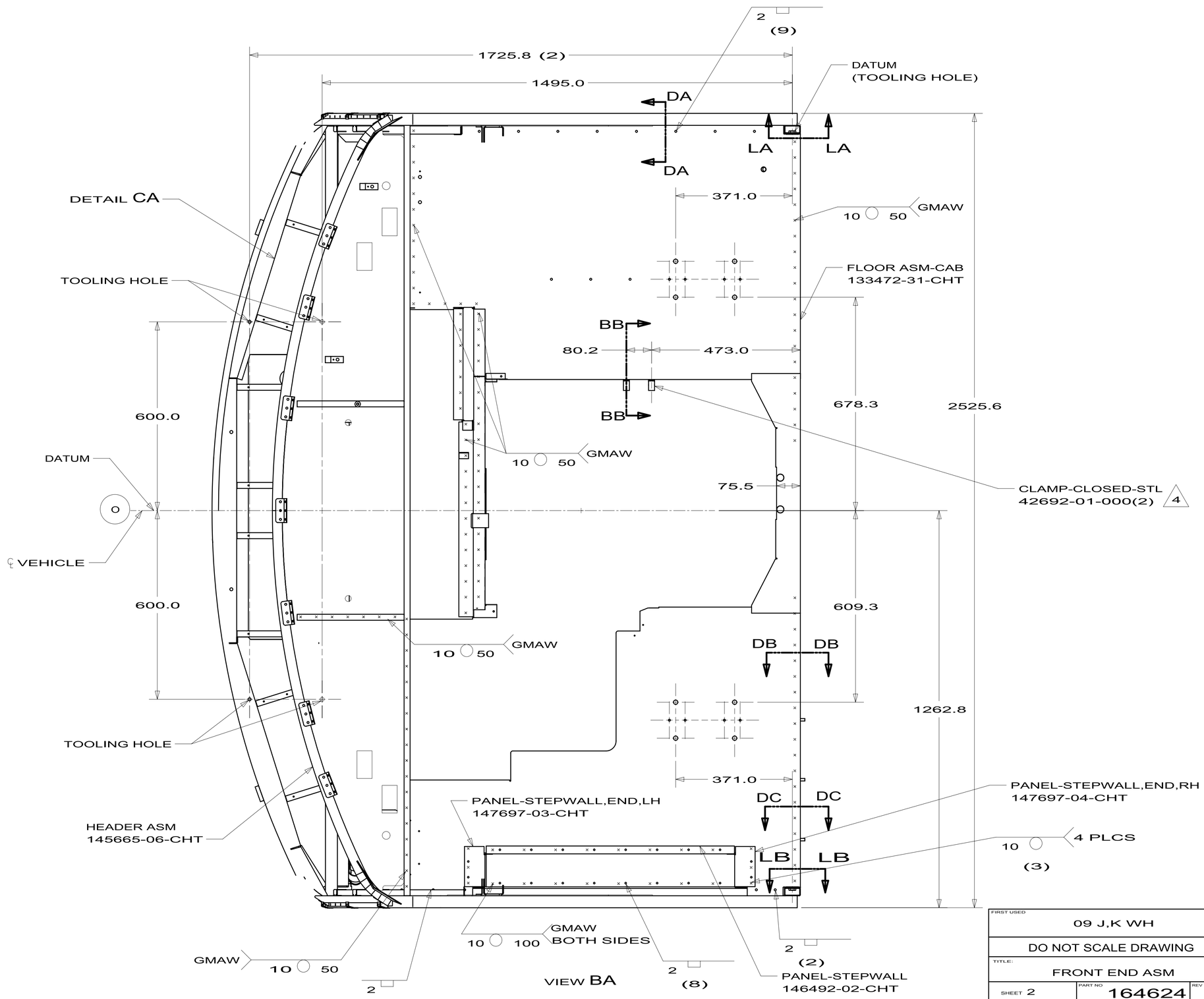

FIRST USED	09 J,K WH
	DO NOT SCALE DRAWING
TITLE:	FRONT END ASM
SHEET 2	PART NO 164624 REV

2/23/2010

DWG NO 164624

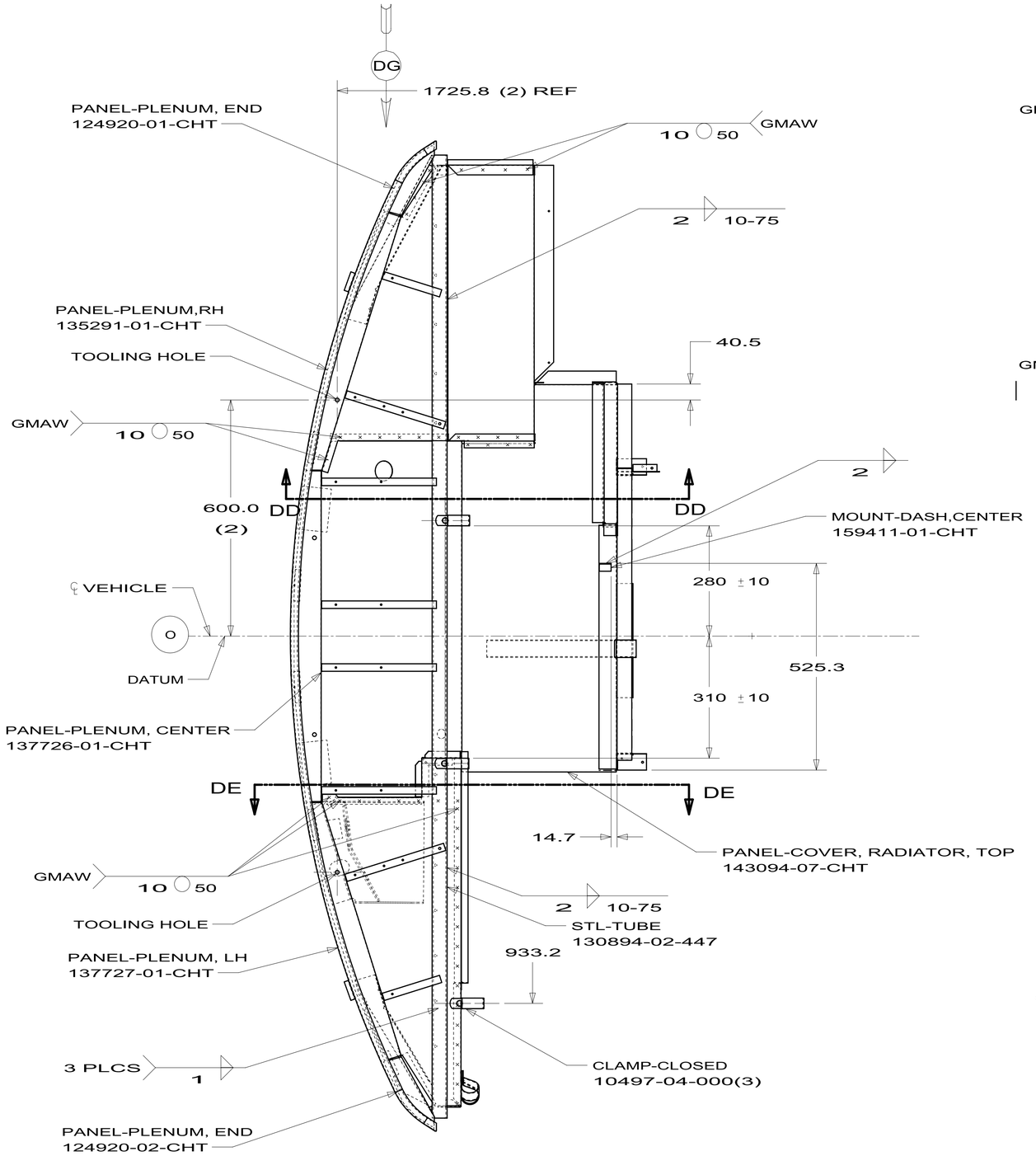

DETAIL CA

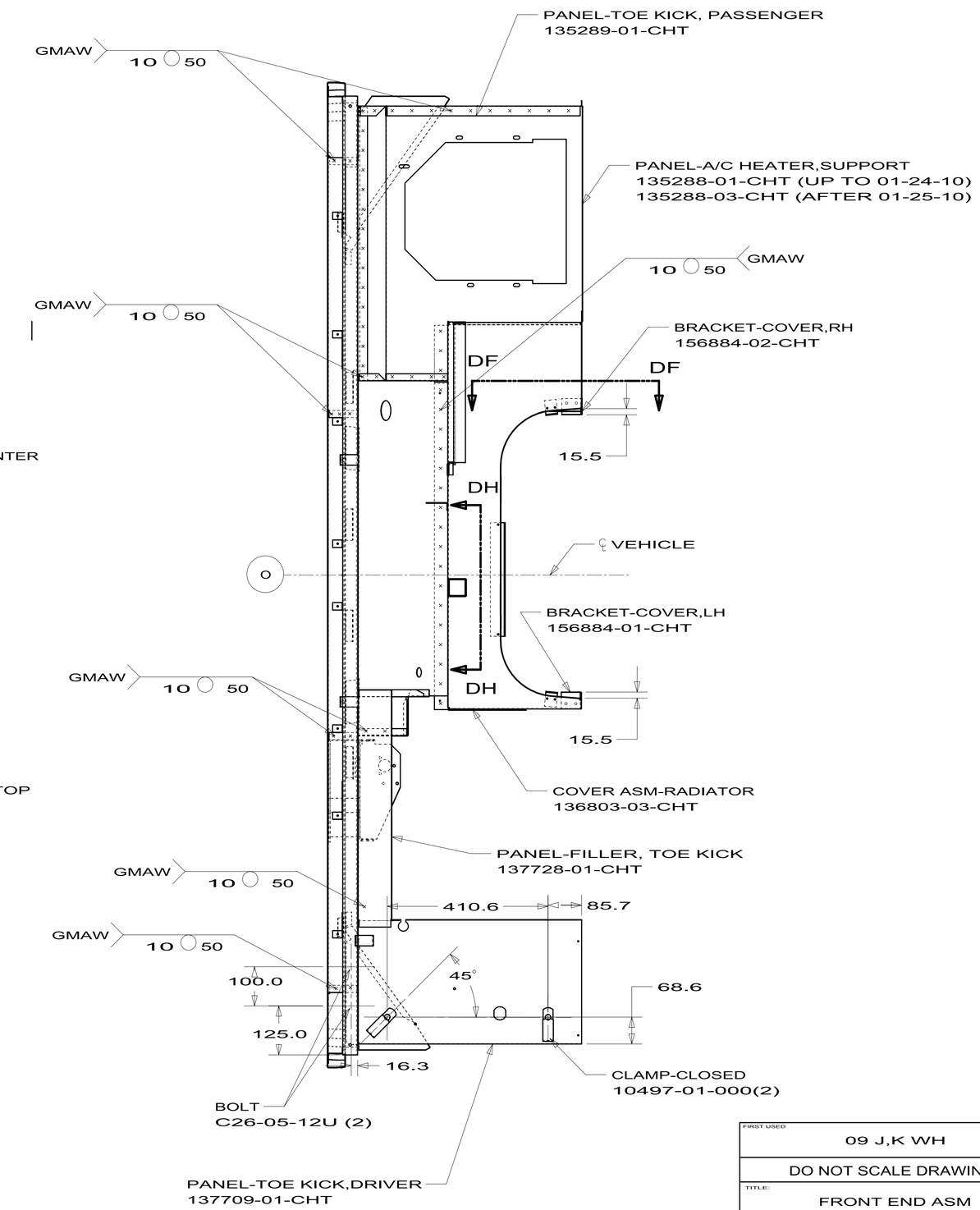

FIRST USED	09 J,K WH
	DO NOT SCALE DRAWING
TITLE:	FRONT END ASM
SHEET 3	PART NO 164624 REV

2/23/2010

DWG NO 164624

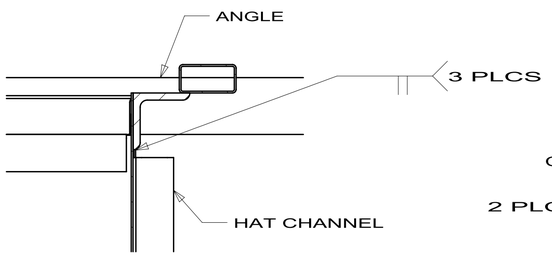

SECTION DA-DA

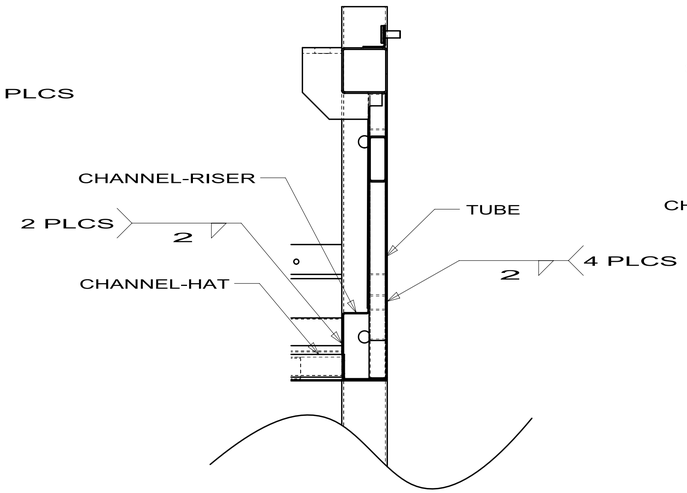

SECTION DB-DB

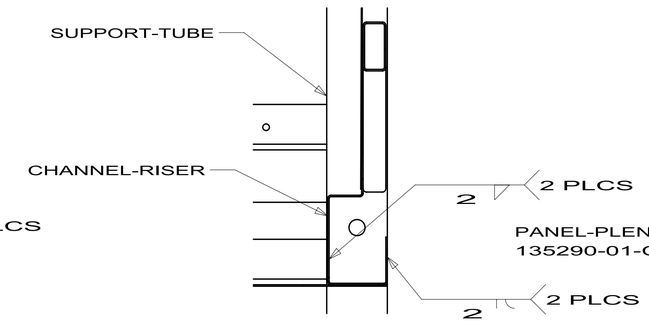

SECTION DC-DC

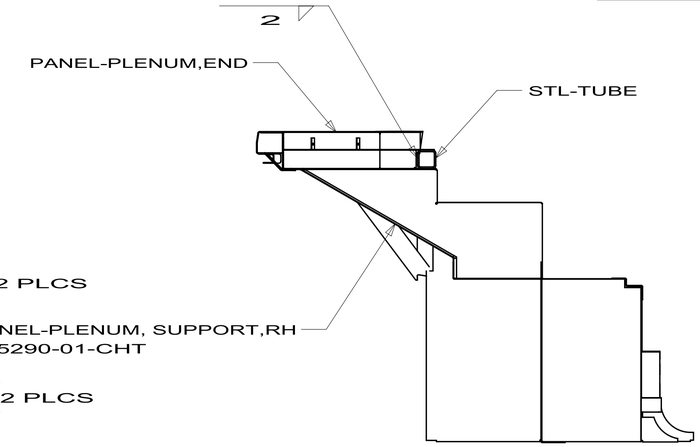

SECTION DD-DD

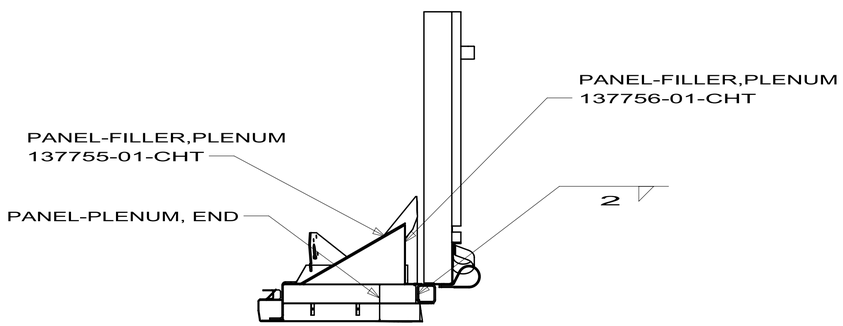

SECTION DE-DE

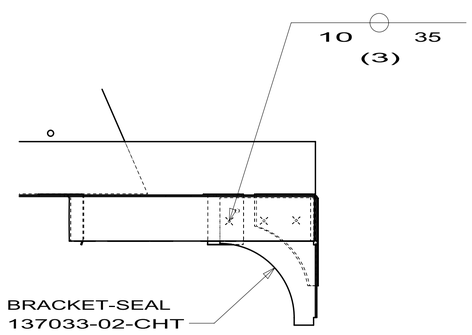

SECTION DF-DF

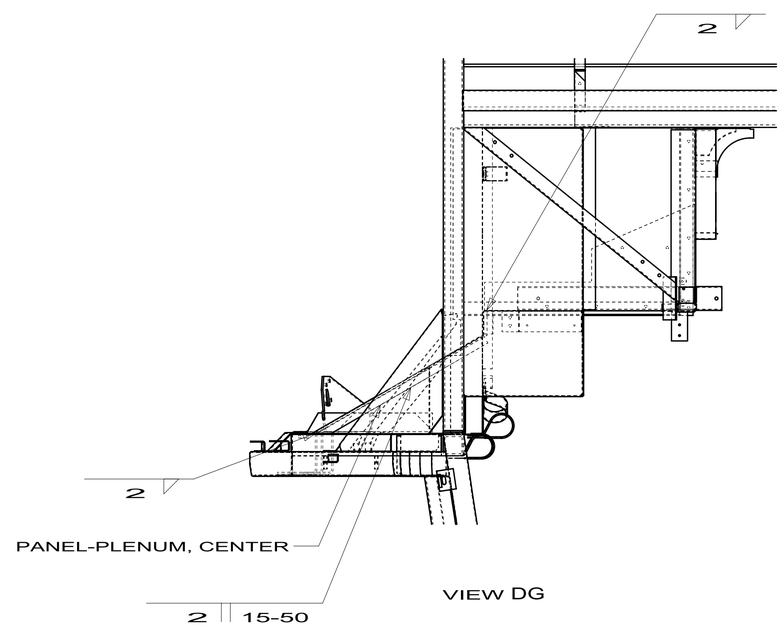

VIEW DG

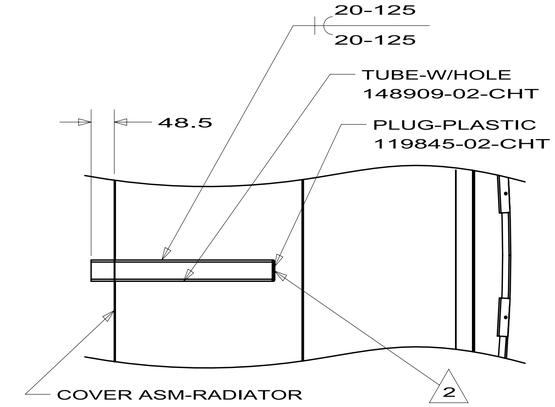

SECTION DH-DH

FIRST USED	09 J,K WH
	DO NOT SCALE DRAWING
TITLE:	FRONT END ASM
SHEET 4	PART NO 164624 REV

2/23/2010

DWG NO 164624

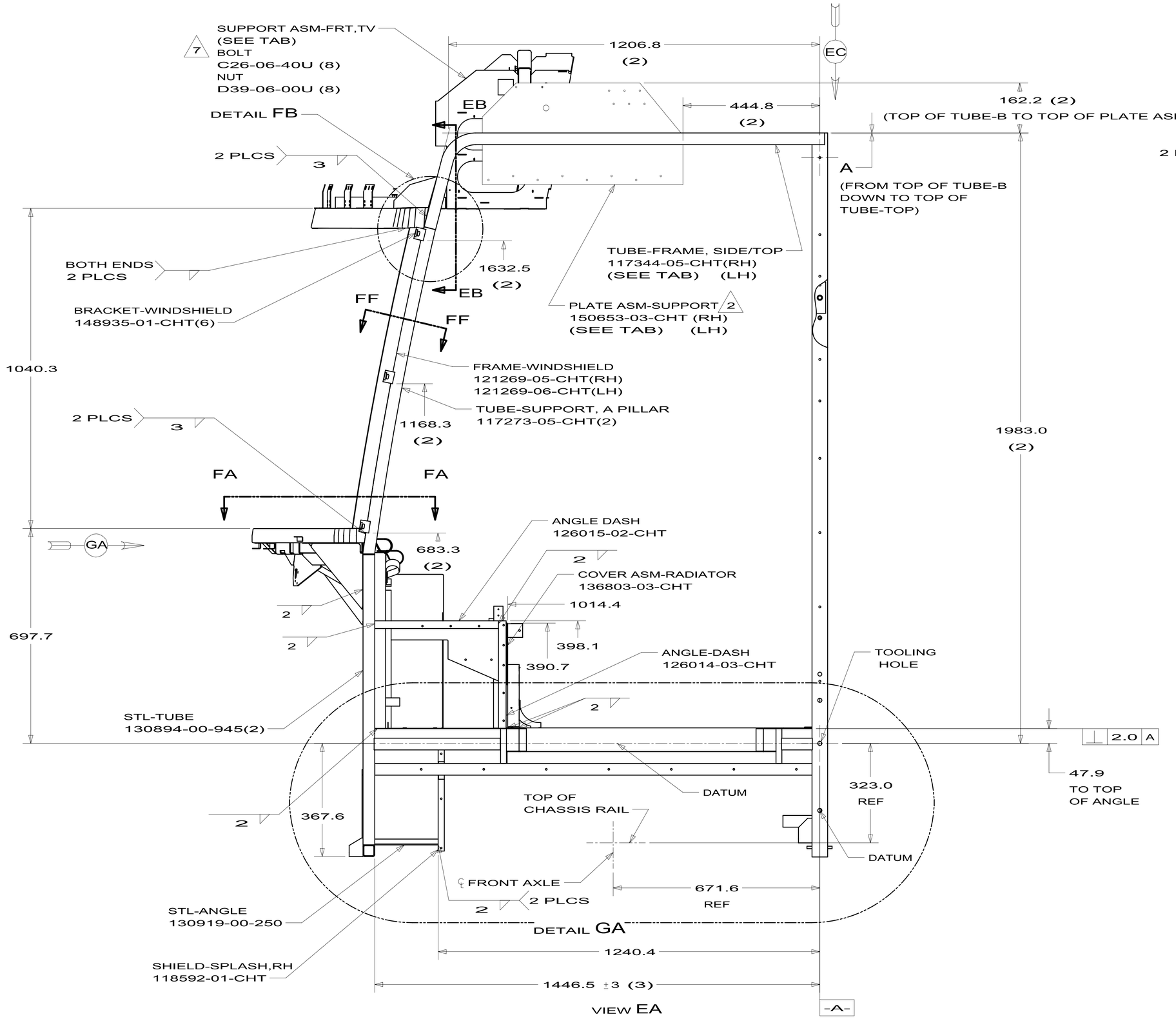

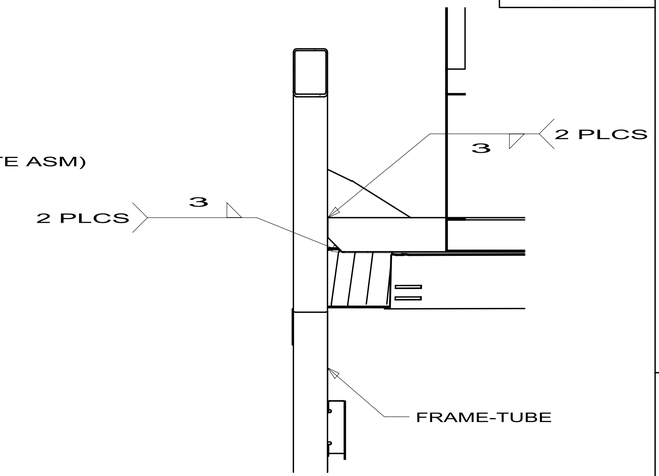

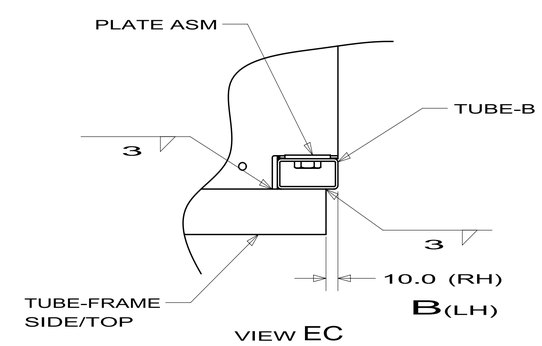

FIRST USED	09 J,K WH
	DO NOT SCALE DRAWING
TITLE:	FRONT END ASM
SHEET 5	PART NO 164624 REV

2/23/2010

DWG NO 164624

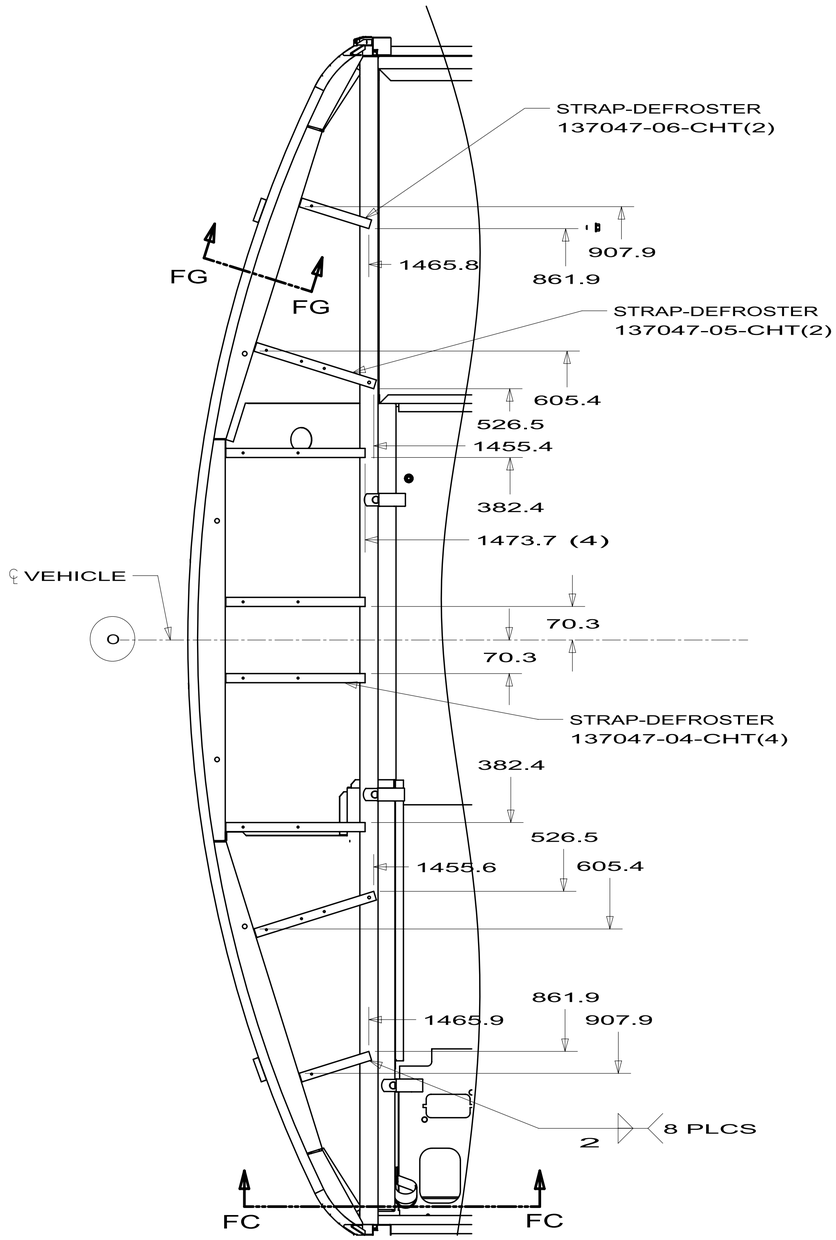

SECTION FA-FA

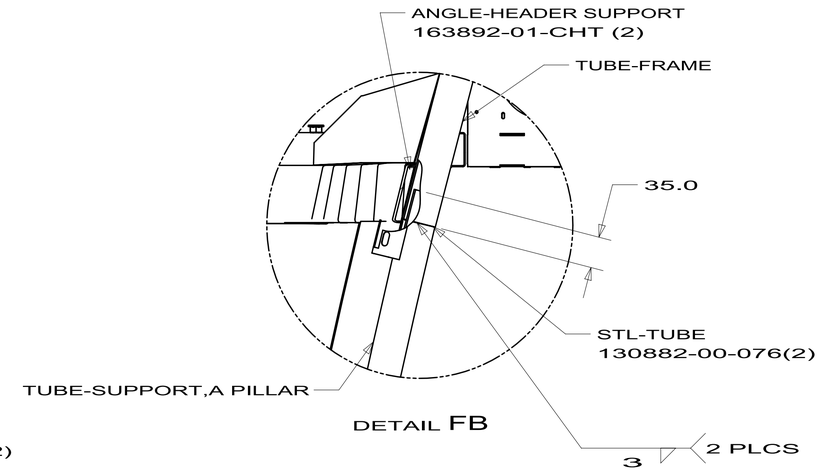

DETAIL FB

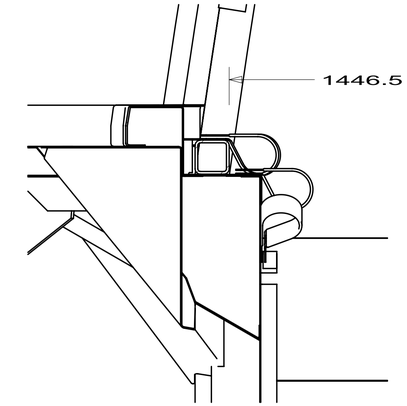

SECTION FC-FC

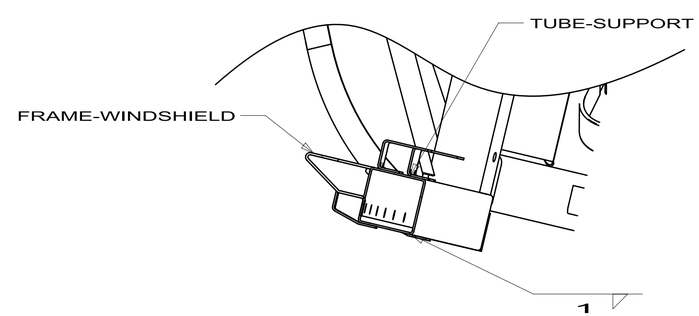

SECTION FF-FF

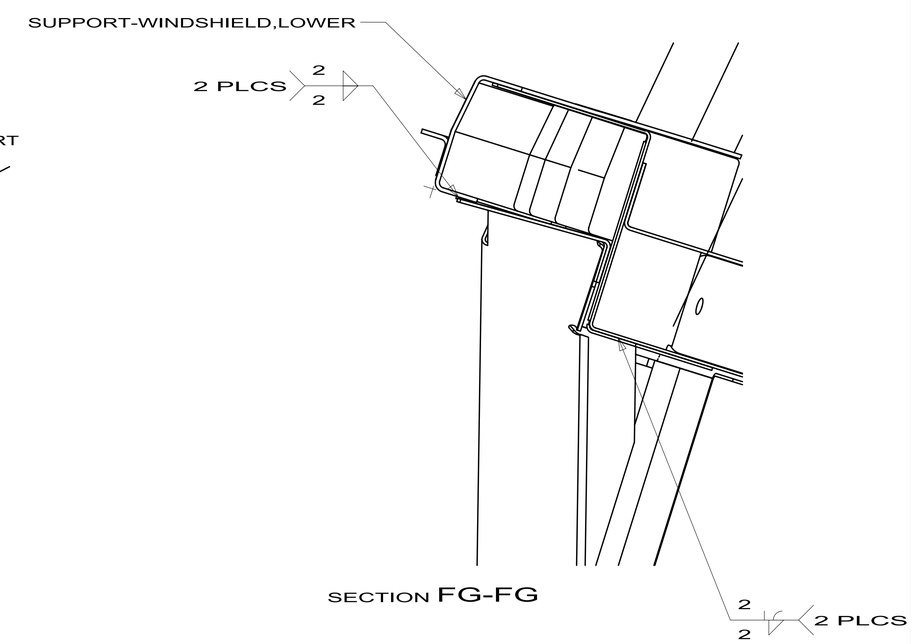

SECTION FG-FG

FIRST USED	09 J,K WH
	DO NOT SCALE DRAWING
TITLE:	FRONT END ASM
SHEET 6	PART NO 164624 REV

2/23/2010

DWG NO 164624

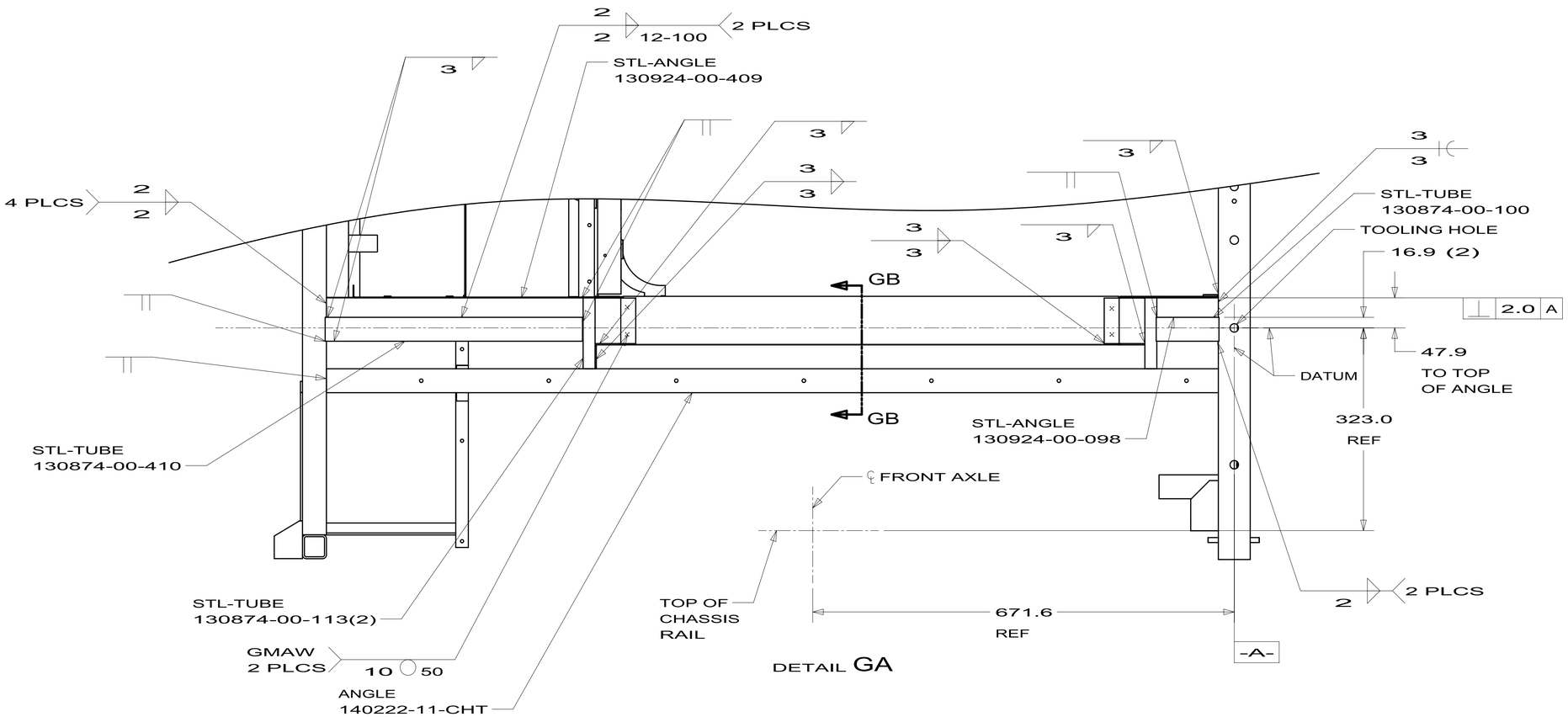

DETAIL GA

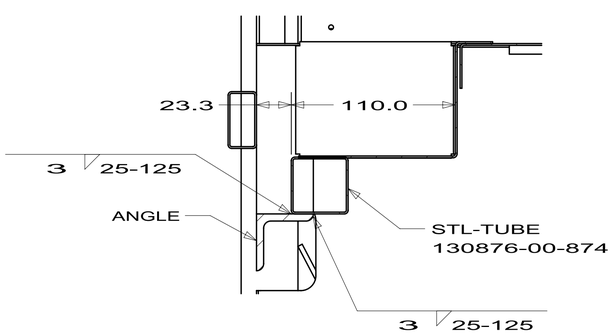

SECTION GB-GB

FIRST USED	09 J,K WH
	DO NOT SCALE DRAWING
TITLE:	FRONT END ASM
SHEET 7	PART NO 164624 REV

2/23/2010

DWG NO 164624

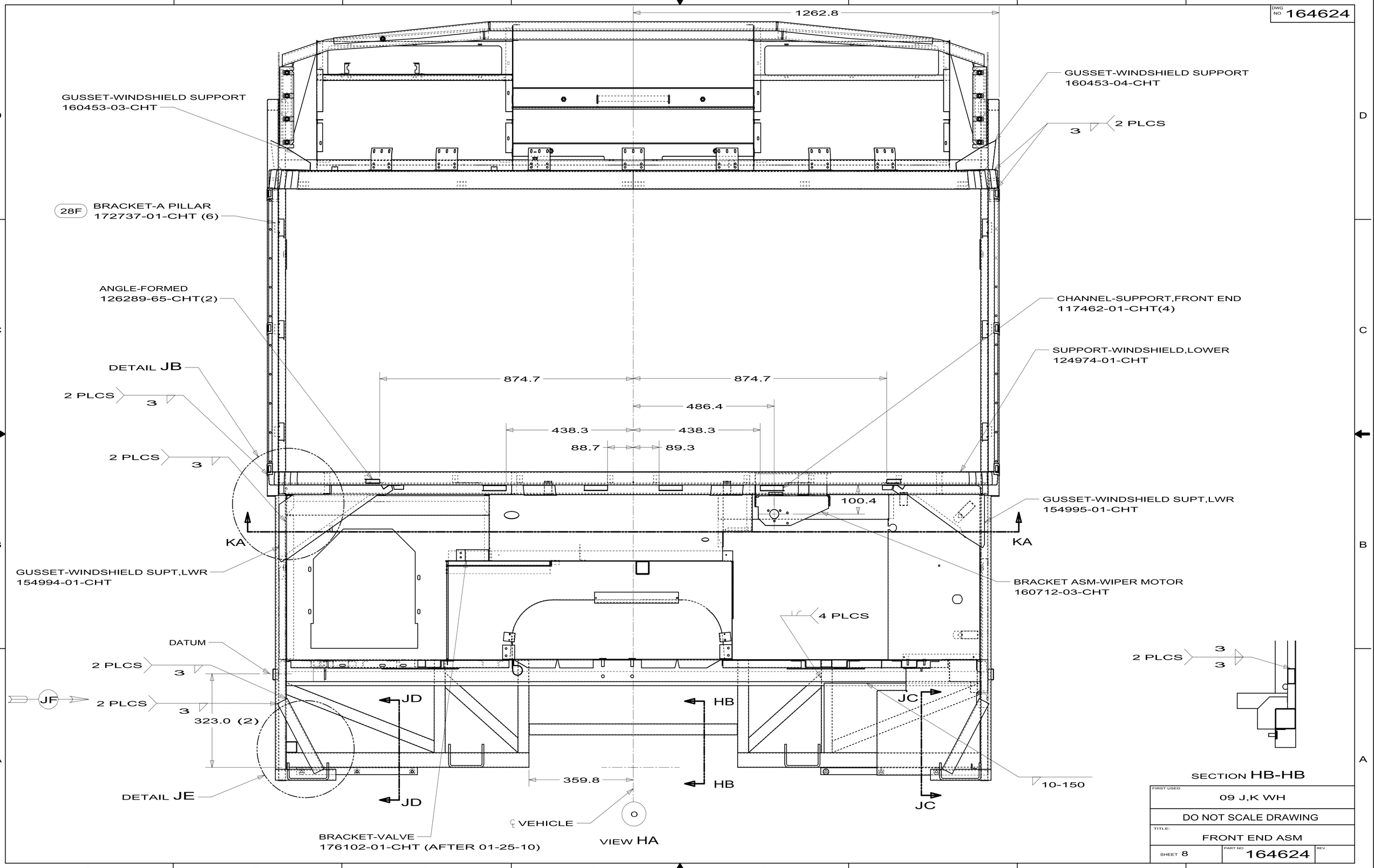

FIRST USED	09 J,K WH
DO NOT SCALE DRAWING	
TITLE:	FRONT END ASM
SHEET 8	PART NO 164624 REV

2/23/2010

DWG NO 164624

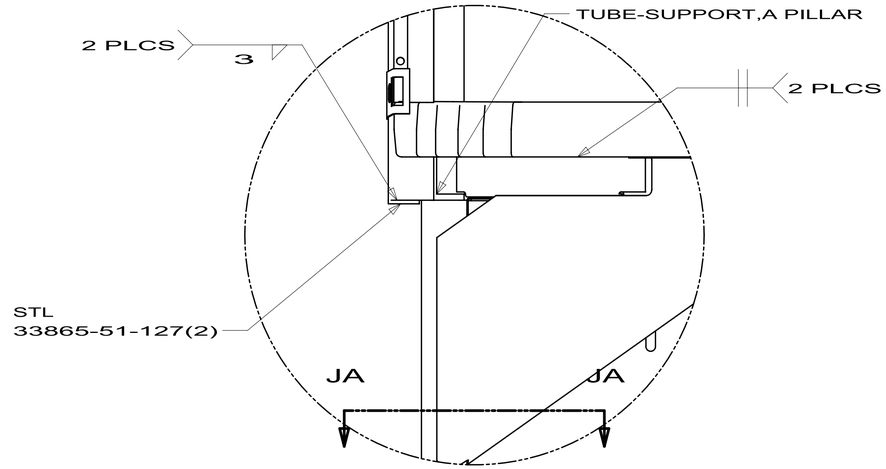

DETAIL JB

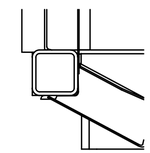

SECTION JA-JA

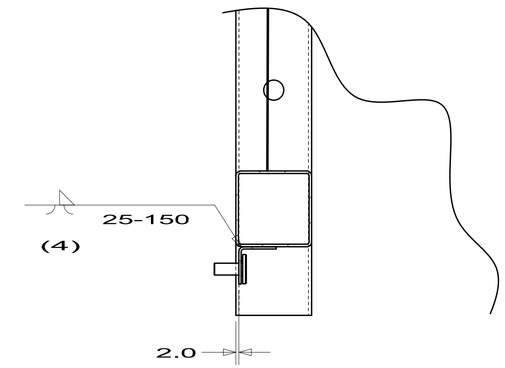

SECTION JC-JC

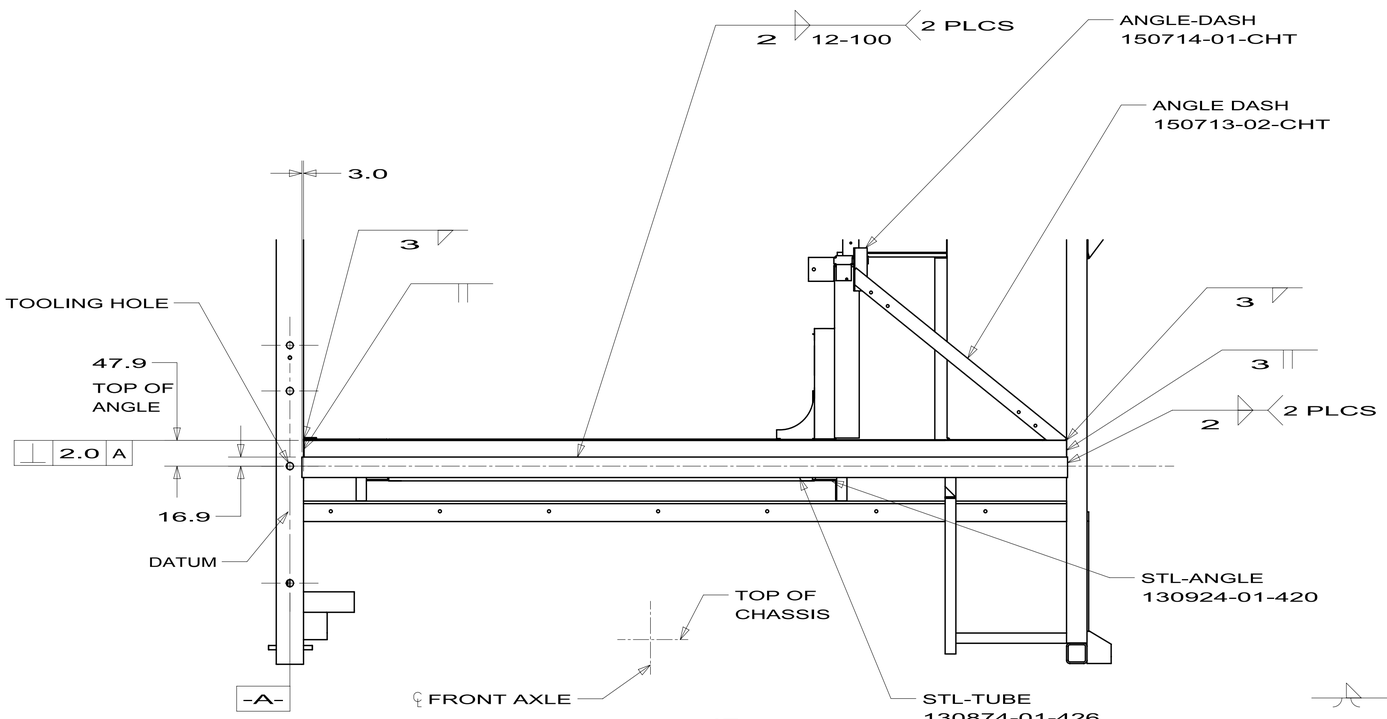

VIEW JF

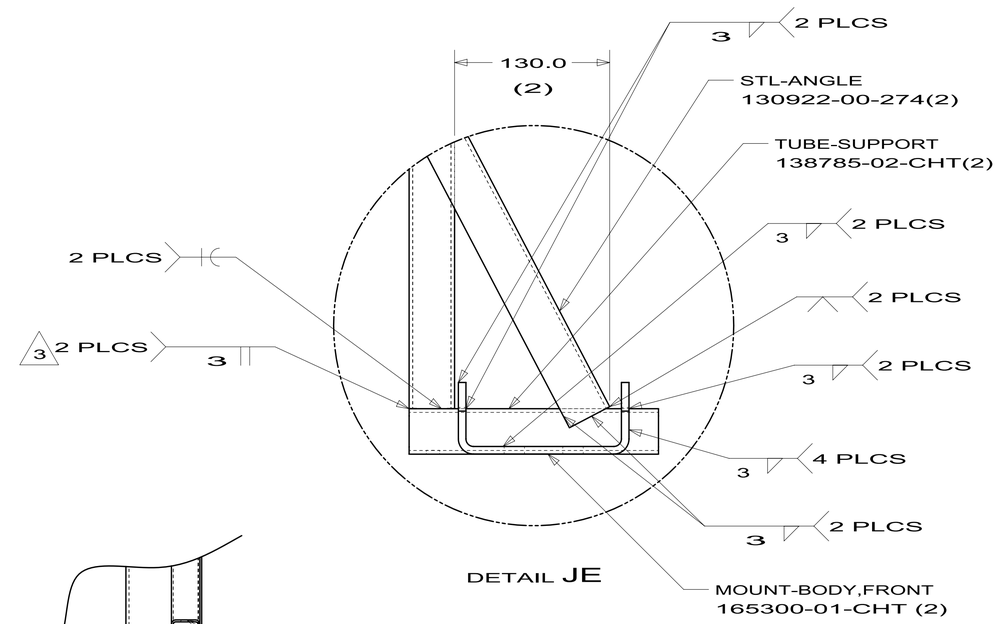

DETAIL JE

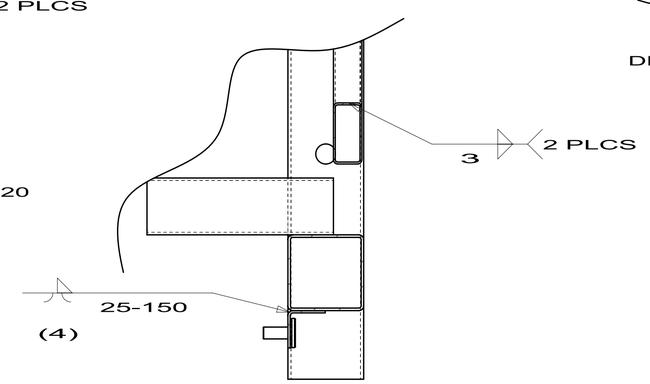

SECTION JD-JD

FIRST USED	09 J,K WH
	DO NOT SCALE DRAWING
TITLE:	FRONT END ASM
SHEET 9	PART NO 164624 REV

2/23/2010

DWG NO 164624

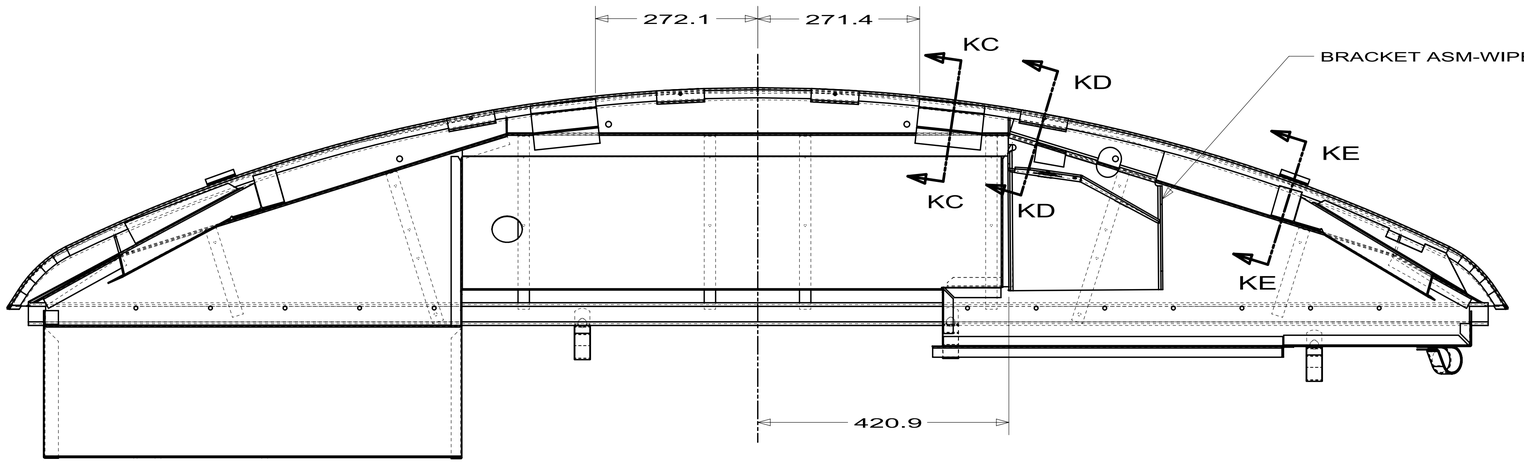

SECTION KA-KA

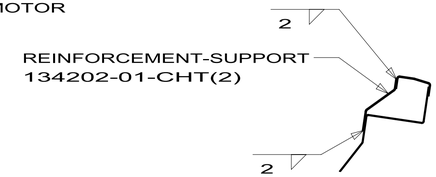

SECTION KC-KC
(2 PLCS)

SECTION KD-KD
(4 PLCS)

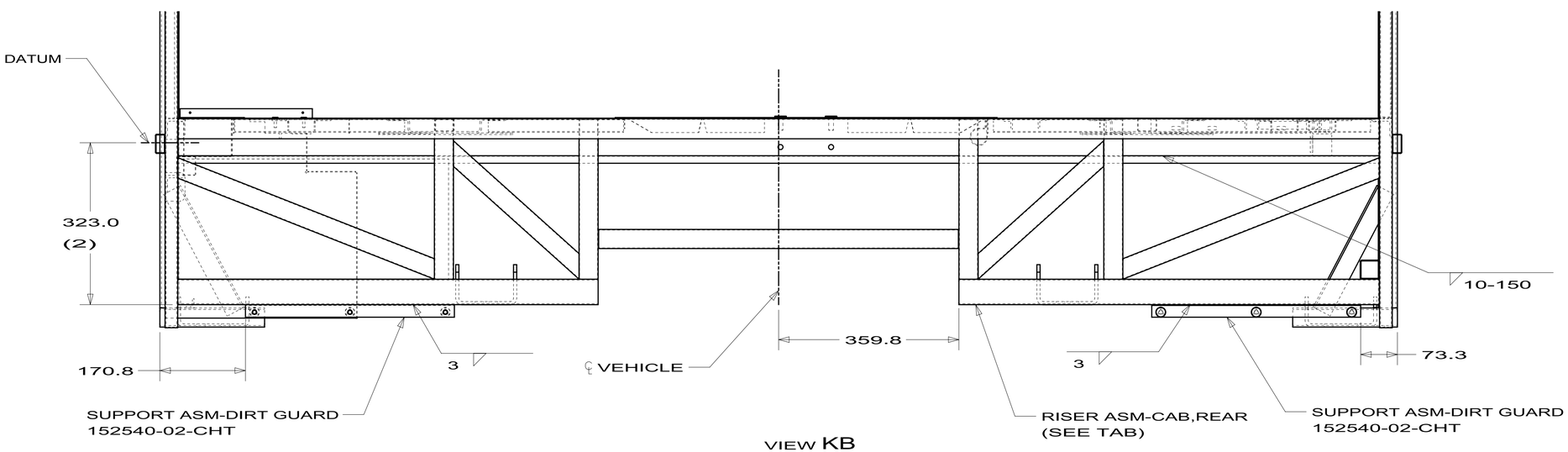

VIEW KB

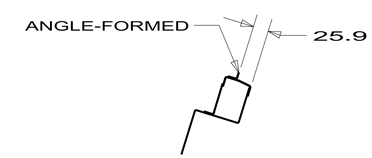

SECTION KE-KE
(2 PLCS)

FIRST USED	09 J,K WH
	DO NOT SCALE DRAWING
TITLE:	FRONT END ASM
SHEET 10	PART NO 164624 REV

2/23/2010

DWG NO 164624

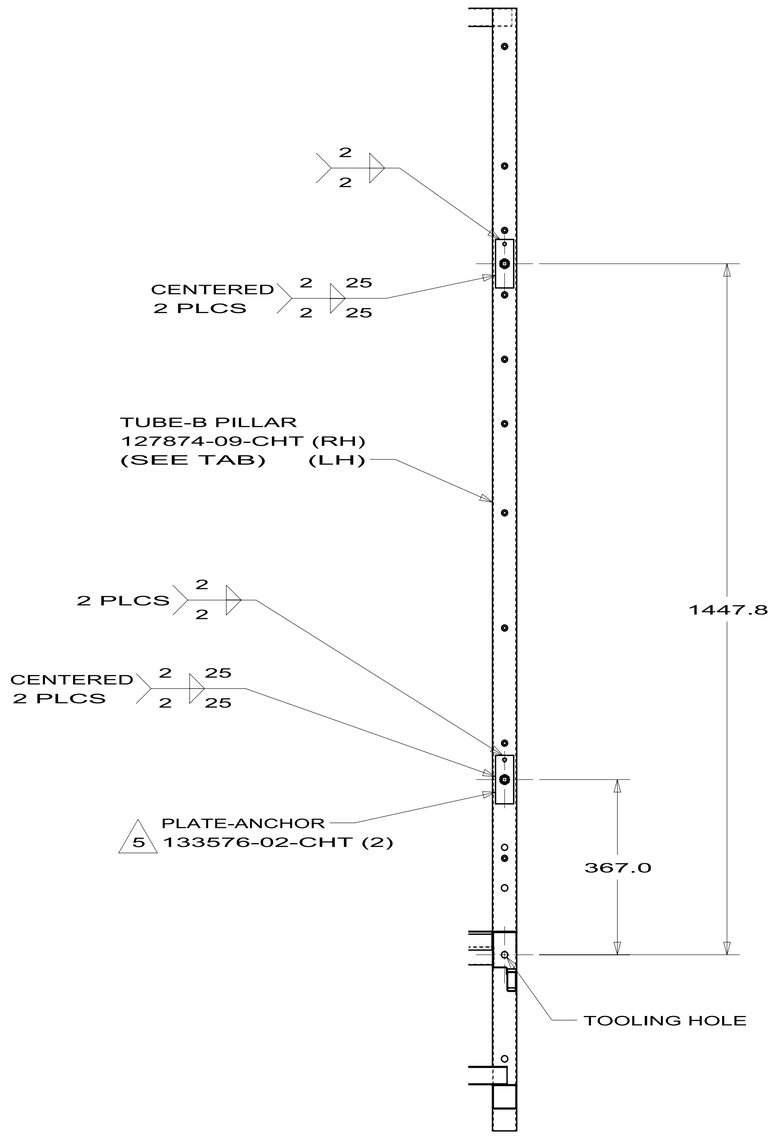

SECTION LA-LA
SHOWN
SECTION LB-LB
OPPOSITE

FIRST USED	09 J,K WH
	DO NOT SCALE DRAWING
TITLE:	FRONT END ASM
SHEET 11	PART NO 164624 REV

2/23/2010

DWG NO	FRONT END ASM	
168874-01	168875-01-CHT	J32H, J35P, J37F - W/O TV
168874-02	168875-02-CHT	J35Z, J38N - W/O TV
168874-03	168875-03-CHT	NOT USED
168874-04	168875-04-CHT	J35Z - W/TV
168874-05	168875-05-CHT	NOT USED
168874-06	168875-06-CHT	J37F - W/TV

RELEASE	REV A	DATE	DWG NO 168874
REV	ZONE	REVISION RECORD	DATE	DFTR-ORIG

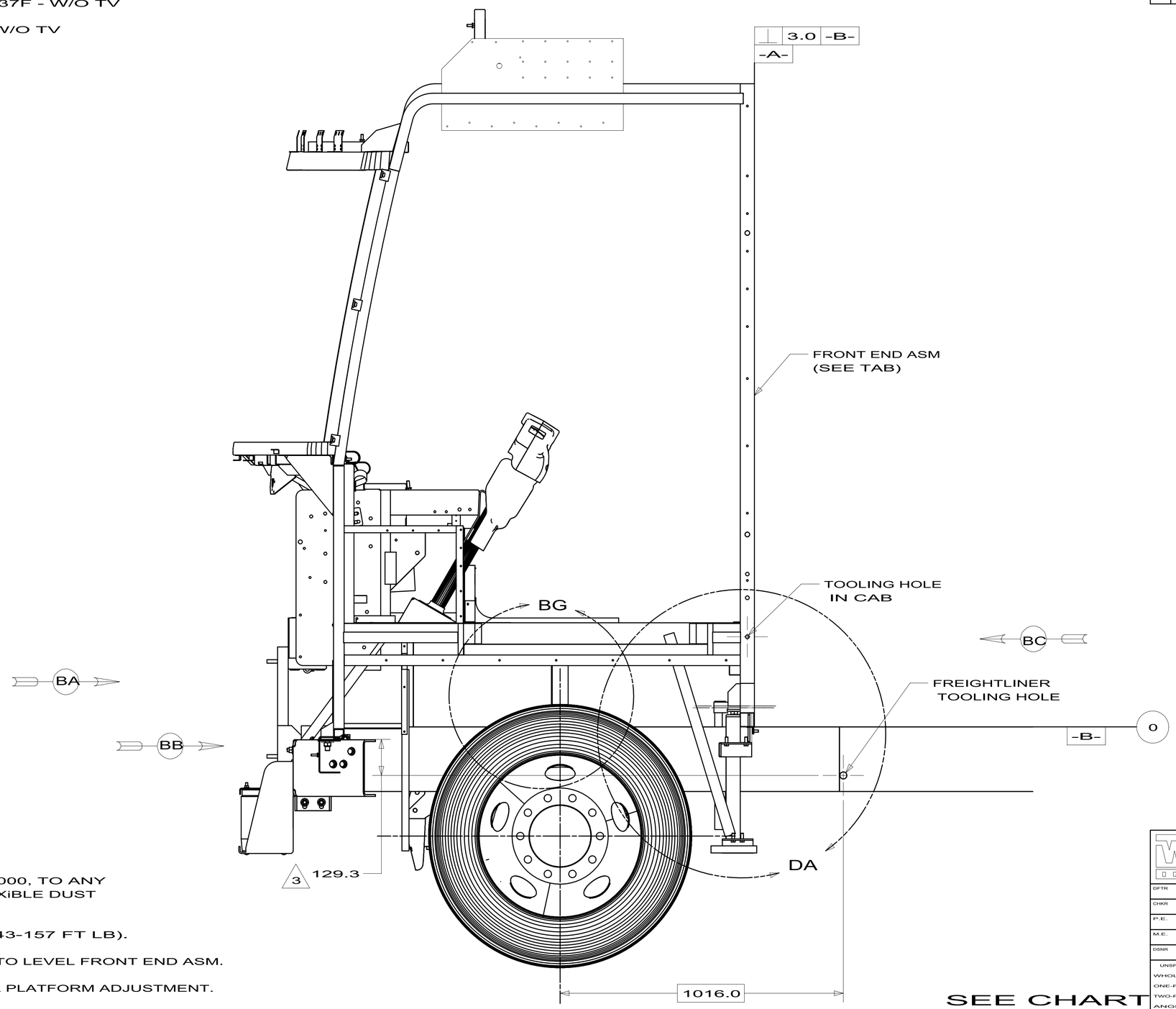

7. APPLY PUTTY SEALER, 111940-02-000, TO ANY SEAMS OR HOLES THAT NEED A FLEXIBLE DUST AND AIR SEAL.
6. TORQUE TO: 191-209 Nm (143-157 FT LB).
5. ADD OR REMOVE SHIMS AS NEEDED TO LEVEL FRONT END ASM.
4. UNBOLT AND WELD AS NEEDED AFTER PLATFORM ADJUSTMENT.
3. ADJUST HEIGHT OF SUPPORT TO LOCATE CAB PROPERLY.
2. SEAL ALL JOINTS BETWEEN PANELS AND CAB.
1. REMOVE ALL BURRS AND SHARP EDGES.

NOTES:

SEE CHART

FOR COLOR VARIATIONS OF THIS PART

INDICATES CRITICAL SAFETY PROCEDURE TO BE FOLLOWED

COPYRIGHT 2009
WINNEBAGO
INDUSTRIES, INC.

DFTR	ORIG. DATE
CHKR	ALL DIMENSIONS ARE IN MILLIMETERS
P.E.	
M.E.	FIRST USED
DSNR	09 J-SER,FL

UNSPECIFIED TOLERANCES ARE:
WHOLE DIM (X) : 3
ONE-PLACE (X.X) : 1.5
TWO-PLACE (X.XX) : 0.50
ANGLE : 1°

MATERIAL:

THIRD ANGLE PROJECTION

DO NOT SCALE DRAWING

TITLE: FRONT END/CHASSIS ASM

SHEET 1 OF 4 | PART NO 168874 | REV

REF:

DWG NO 168874

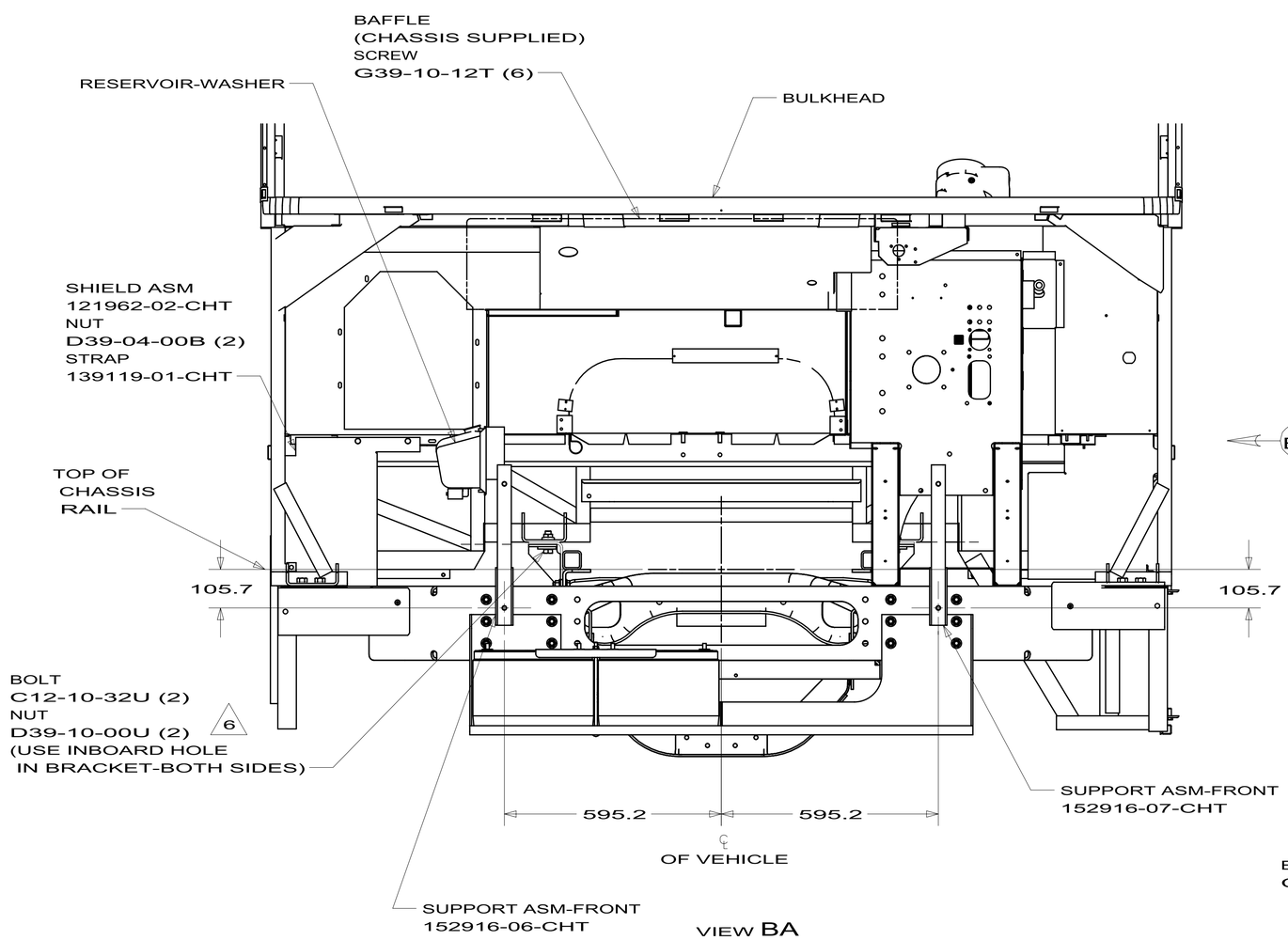

VIEW BA

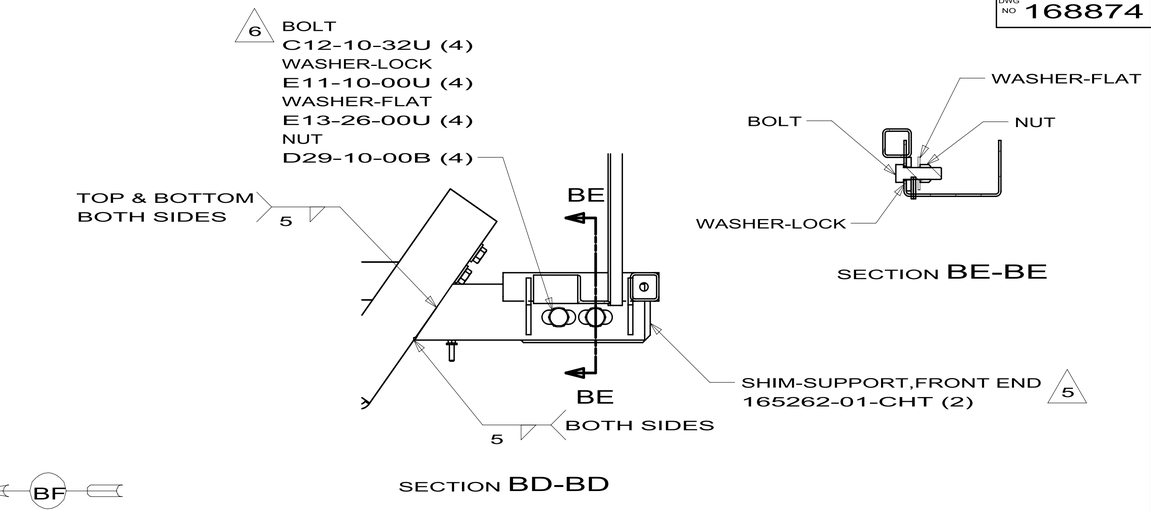

SECTION BE-BE

SECTION BD-BD

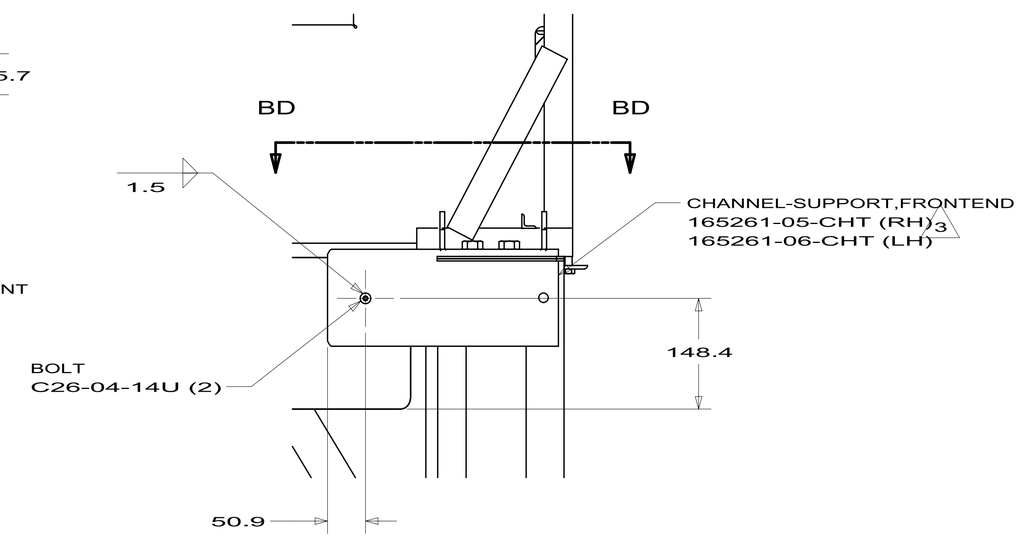

VIEW BB

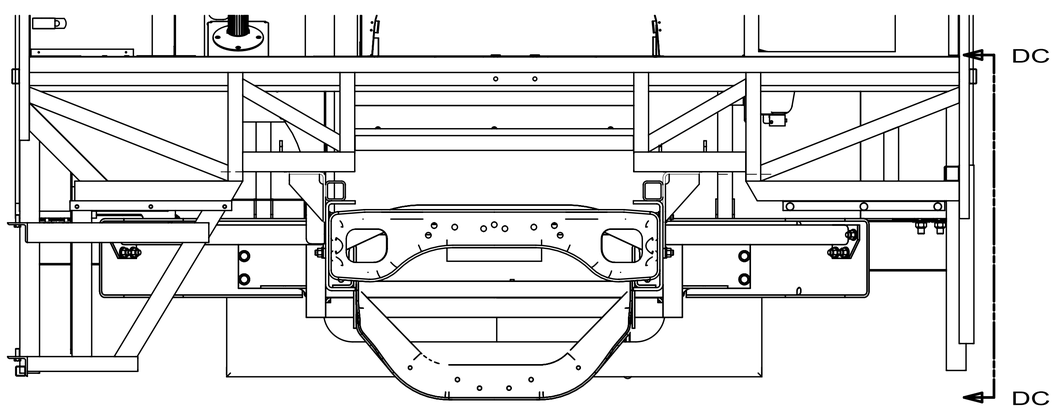

VIEW BC

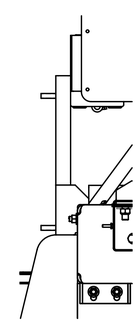

VIEW BF

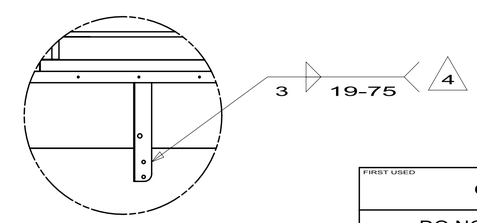

DETAIL BG

FIRST USED	09 J-SER,FL
DO NOT SCALE DRAWING	
TITLE:	FRONT END/CHASSIS ASM
SHEET 2	PART NO 168874 REV

DWG NO 168874

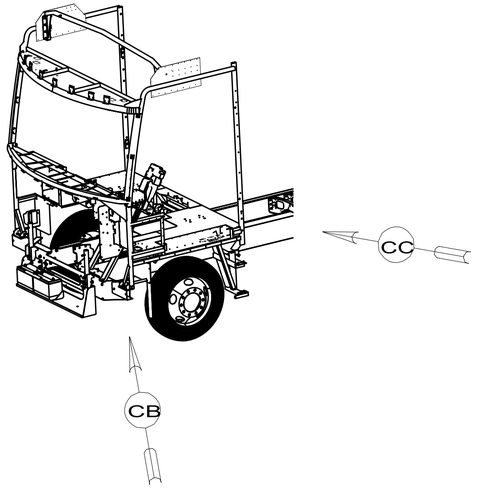

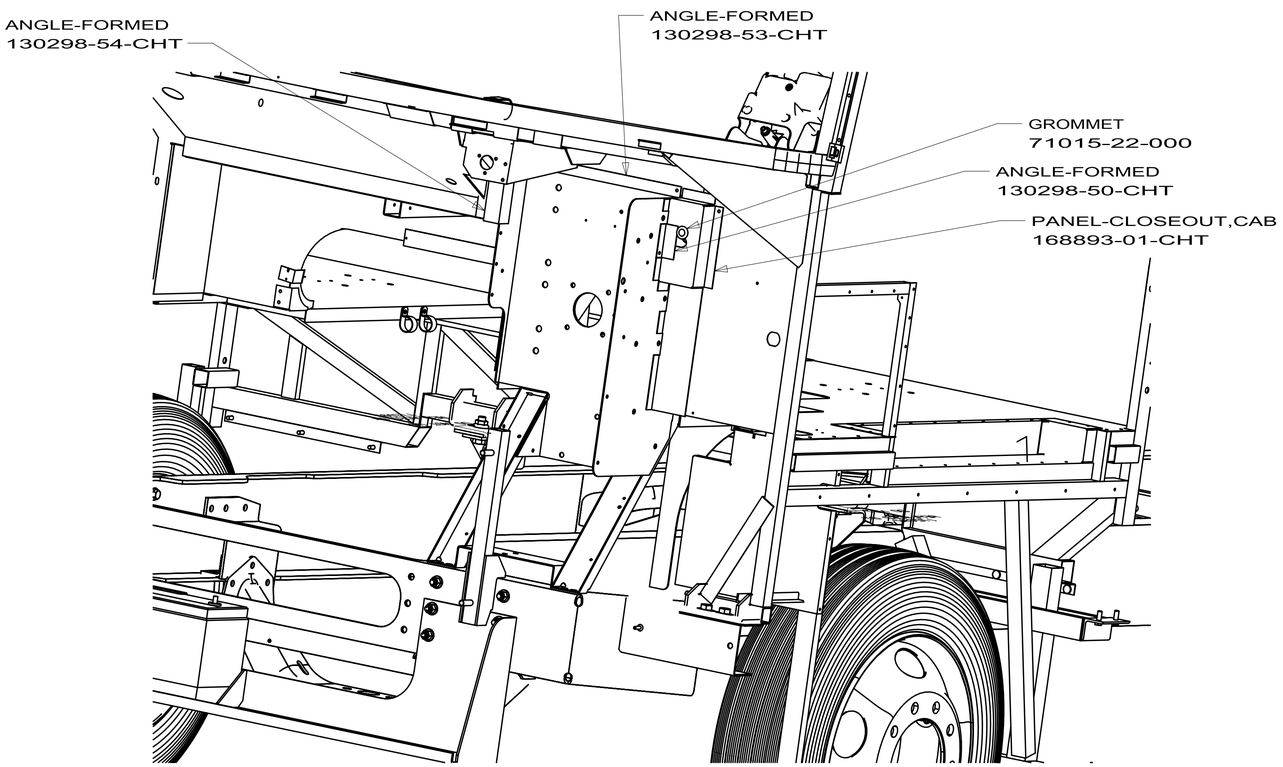

VIEW CB

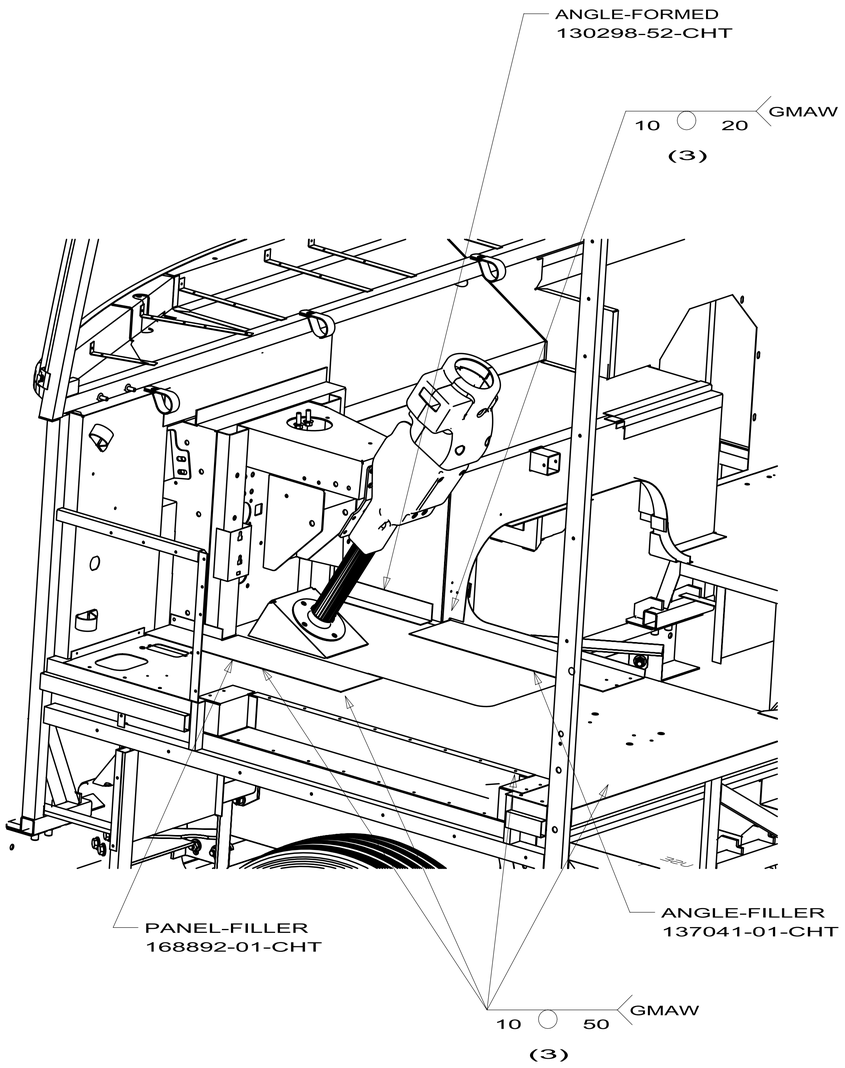

VIEW CC

FIRST USED	09 J-SER,FL
DO NOT SCALE DRAWING	
TITLE:	FRONT END/CHASSIS ASM
SHEET 3	PART NO 168874 REV

DWG NO 168874

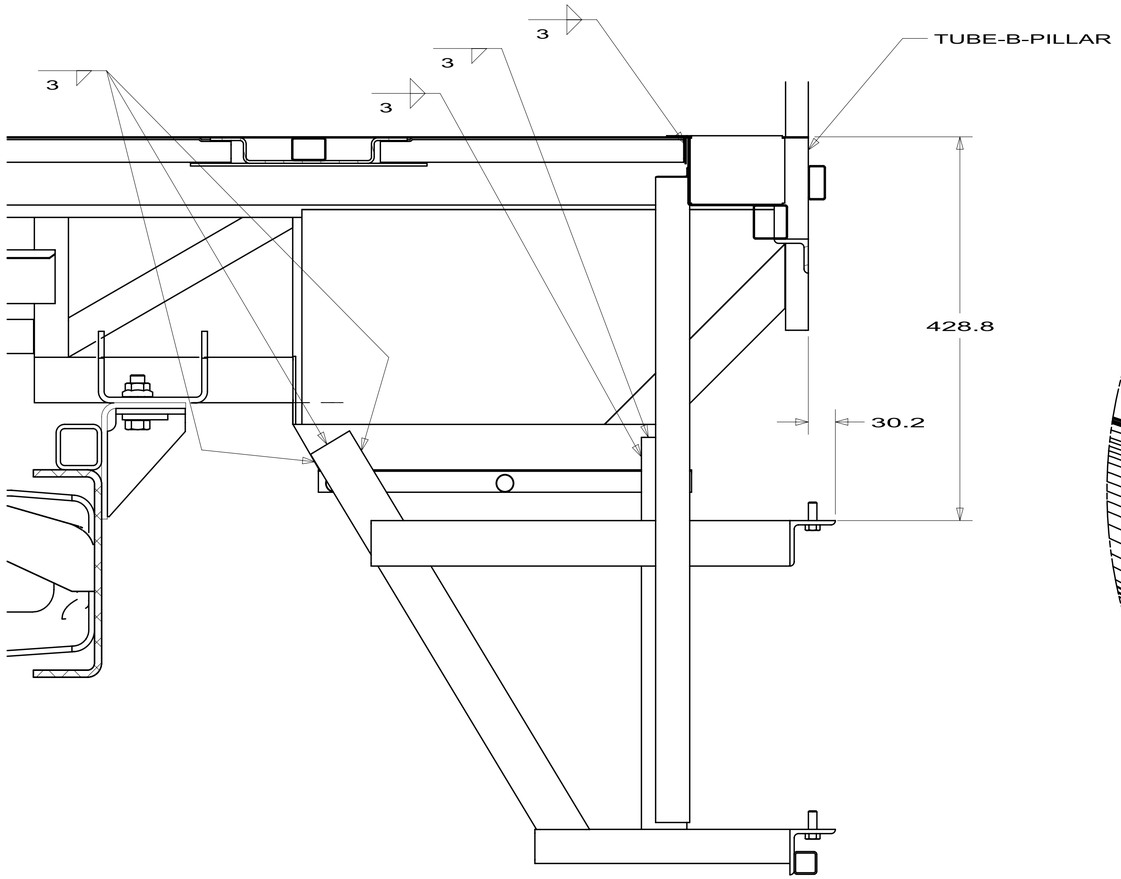

SECTION DB-DB

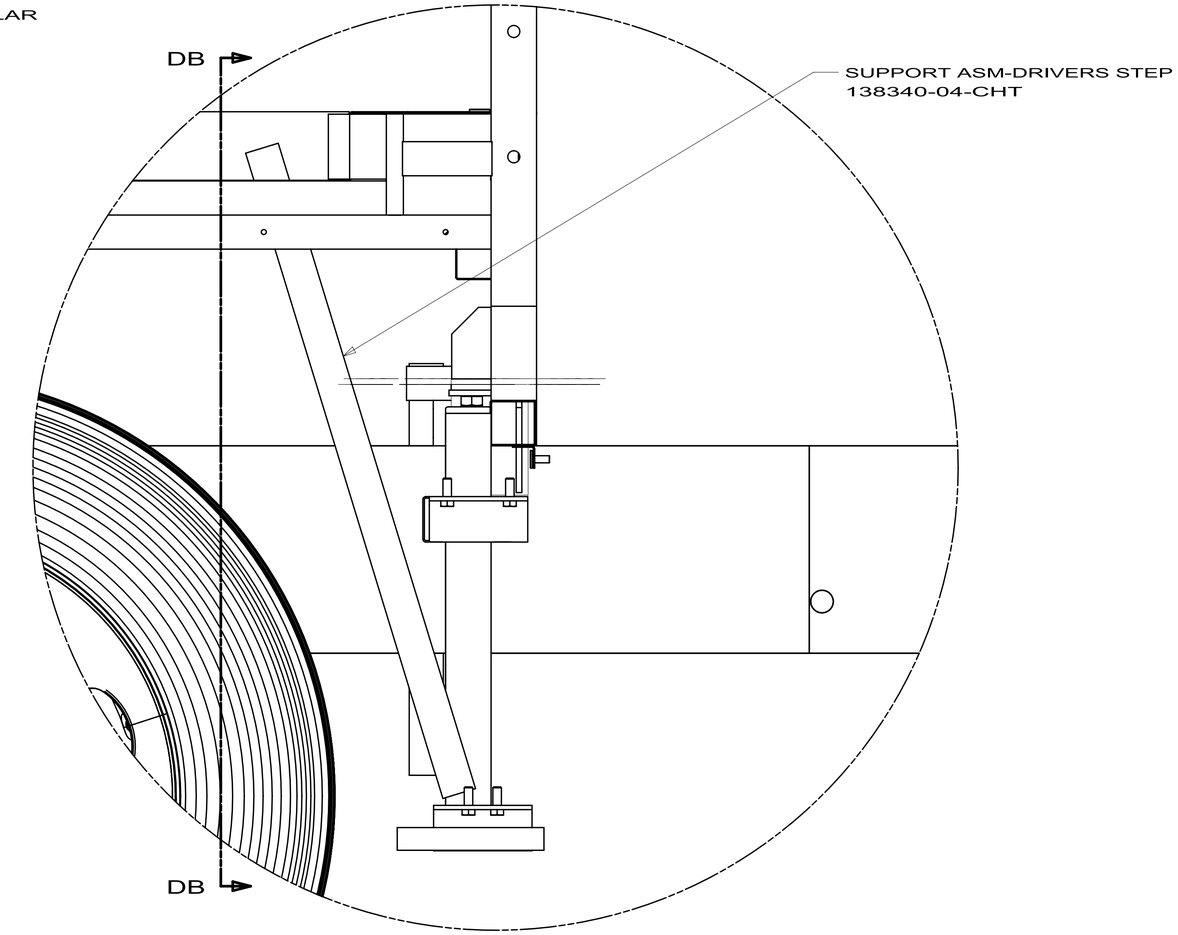

DETAIL DA

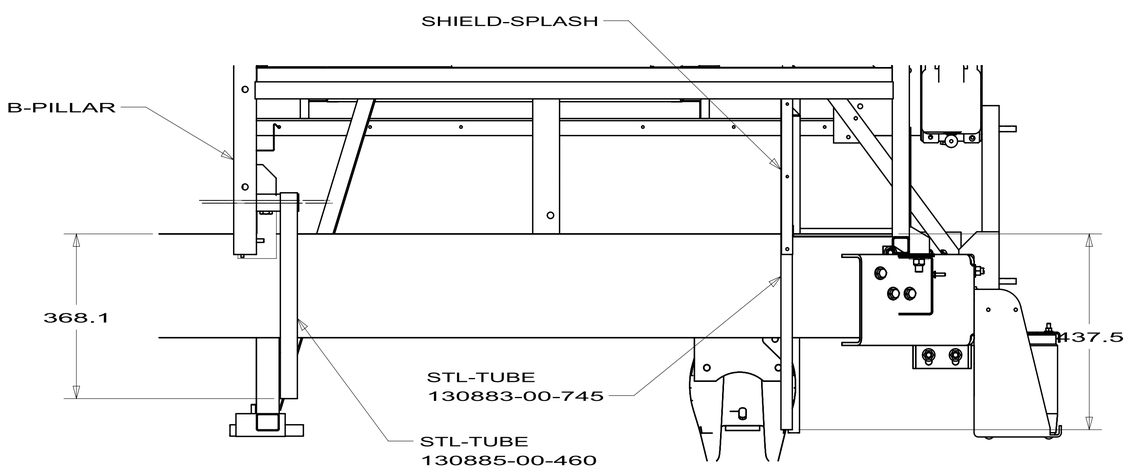

SECTION DC-DC

FIRST USED	09 J-SER,FL
DO NOT SCALE DRAWING	
TITLE:	FRONT END/CHASSIS ASM
SHEET 4	PART NO 168874 REV

DWG NO	TUBE-TOP,LH	PLATE ASM-LH	A	B	SUPPORT ASM-TV
168875-01	117344-10-CHT	150653-07-CHT	34.0	40.0	151975-02-CHT
168875-02	117344-05-CHT	150653-04-CHT	0.0	10.0	151975-02-CHT
168875-03	117344-05-CHT	150653-04-CHT	0.0	10.0	151975-03-CHT
168875-04	117344-05-CHT	150653-04-CHT	0.0	10.0	151975-04-CHT
168875-05	117344-10-CHT	150653-07-CHT	34.0	40.0	151975-03-CHT
168875-06	117344-10-CHT	150653-07-CHT	34.0	40.0	151975-04-CHT

RELEASE	REV A	DATE	DWG NO 168875
REV	ZONE	REVISION RECORD	DATE	DFTR-ORIG

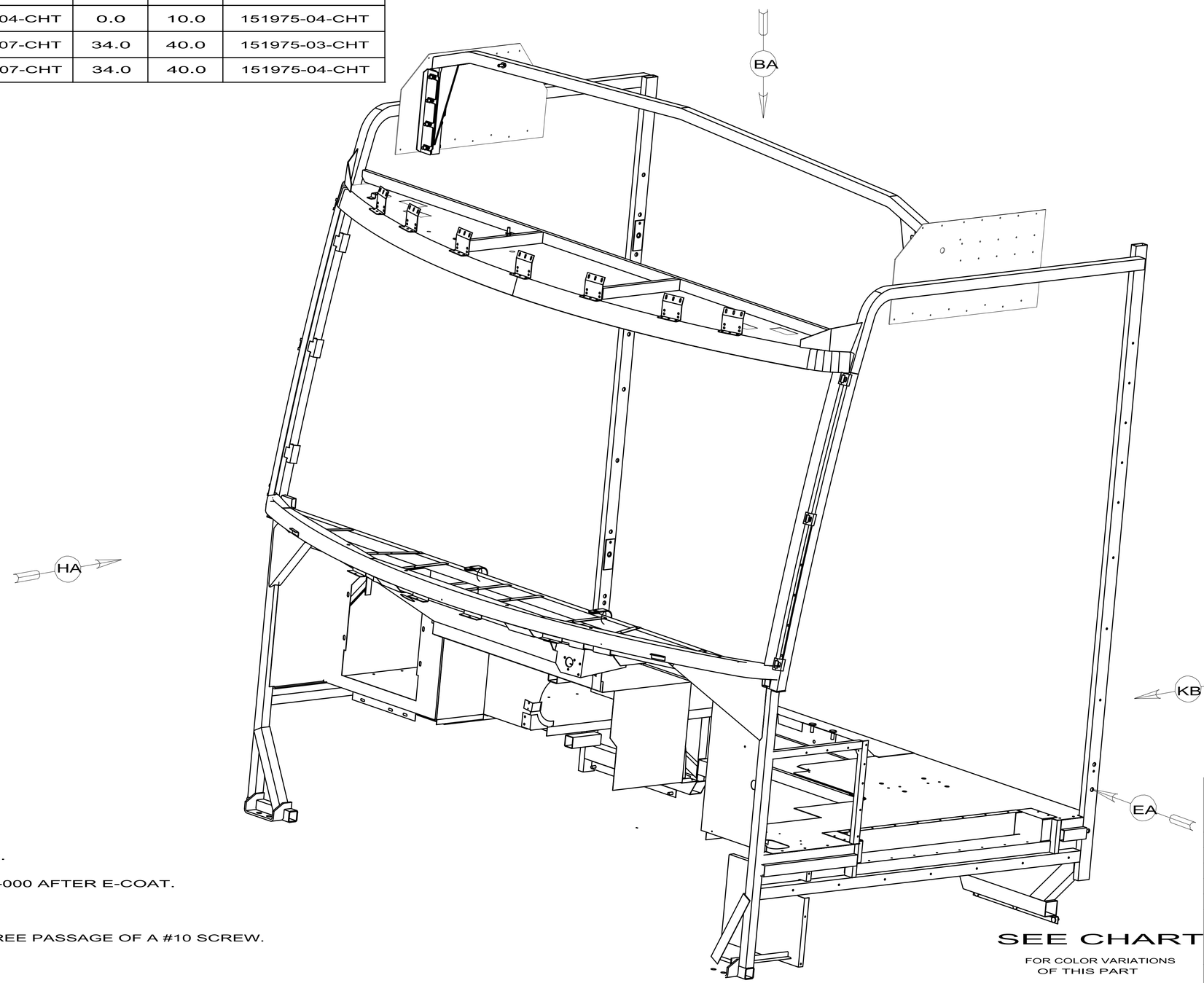

28F FRONT SHADE-POWERED

7. TORQUE BOLT TO 34 FT-LBS.

6. SEAL WITH SEALANT 110744-C3-000 AFTER E-COAT.

5. ALIGN HOLES.

4. HOLES MUST ALIGN TO ALLOW FREE PASSAGE OF A #10 SCREW.

3. MUST BE FLUSH WITHIN ± 1.5.

2. ATTACH AFTER E-COAT.

1. CLEAN, E-COAT AND SEAL CAB WITH 143201-01-000.

NOTES:

SEE CHART

FOR COLOR VARIATIONS OF THIS PART

INDICATES CRITICAL SAFETY PROCEDURE TO BE FOLLOWED

COPYRIGHT 2010
WINNEBAGO
INDUSTRIES, INC.

DFTR	ORIG. DATE
CHKR	ALL DIMENSIONS ARE IN MILLIMETERS
P.E.	
M.E.	FIRST USED
DSNR	09 J-SER,FL

UNSPECIFIED TOLERANCES ARE:

WHOLE DIM (X)	:	3
ONE-PLACE (X.X)	:	1.5
TWO-PLACE (X.XX)	:	0.50
ANGLE	:	1°

THIRD ANGLE PROJECTION

MATERIAL:

DO NOT SCALE DRAWING

TITLE: FRONT END ASM

SHEET 1 OF 10 | PART NO 168875 | REV

REF:

2/19/2010

DWG NO 168875

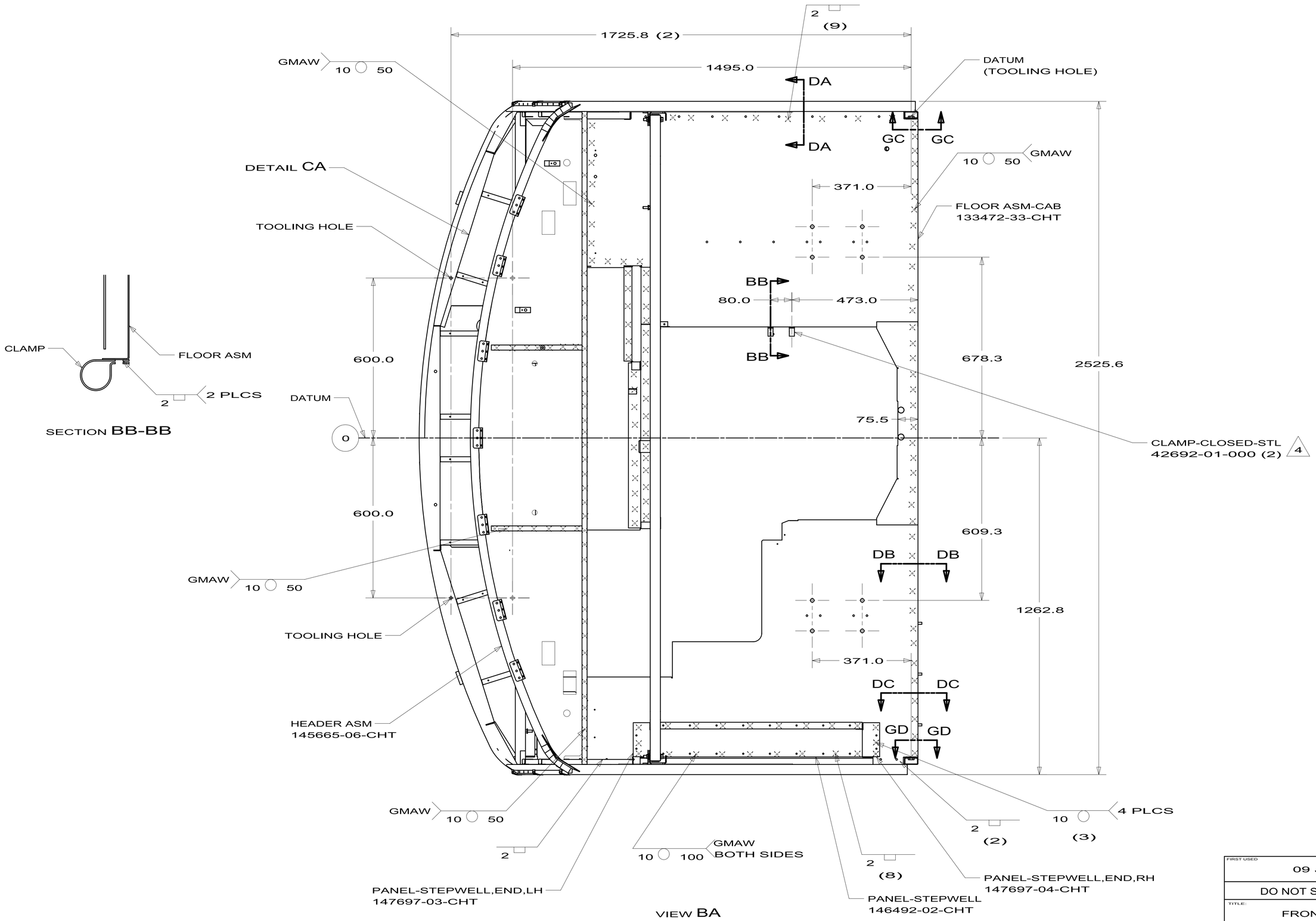

FIRST USED	09 J-SER,FL
DO NOT SCALE DRAWING	
TITLE:	FRONT END ASM
SHEET 2	PART NO 168875 REV

2/19/2010

DWG NO 168875

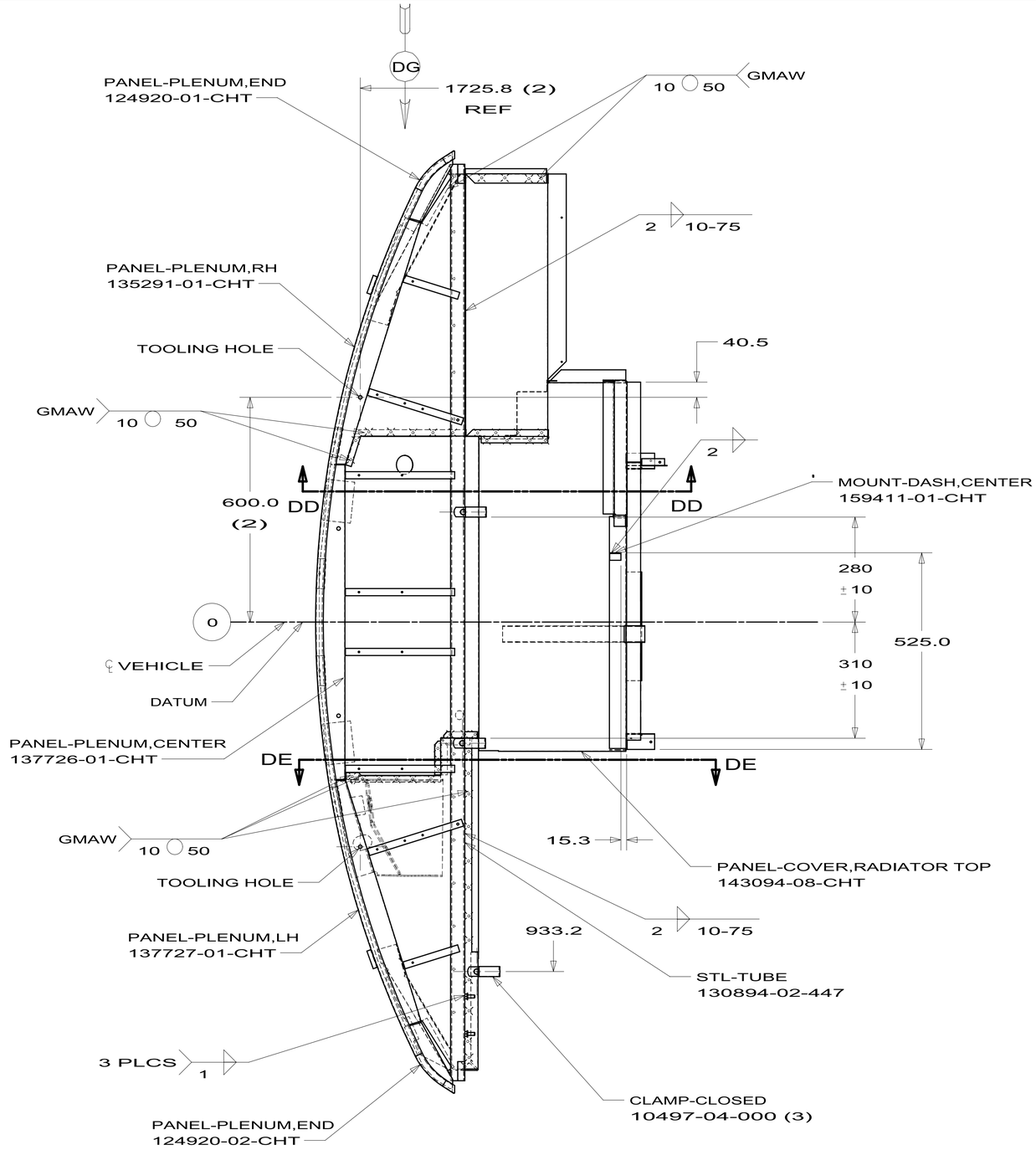

DETAIL CA

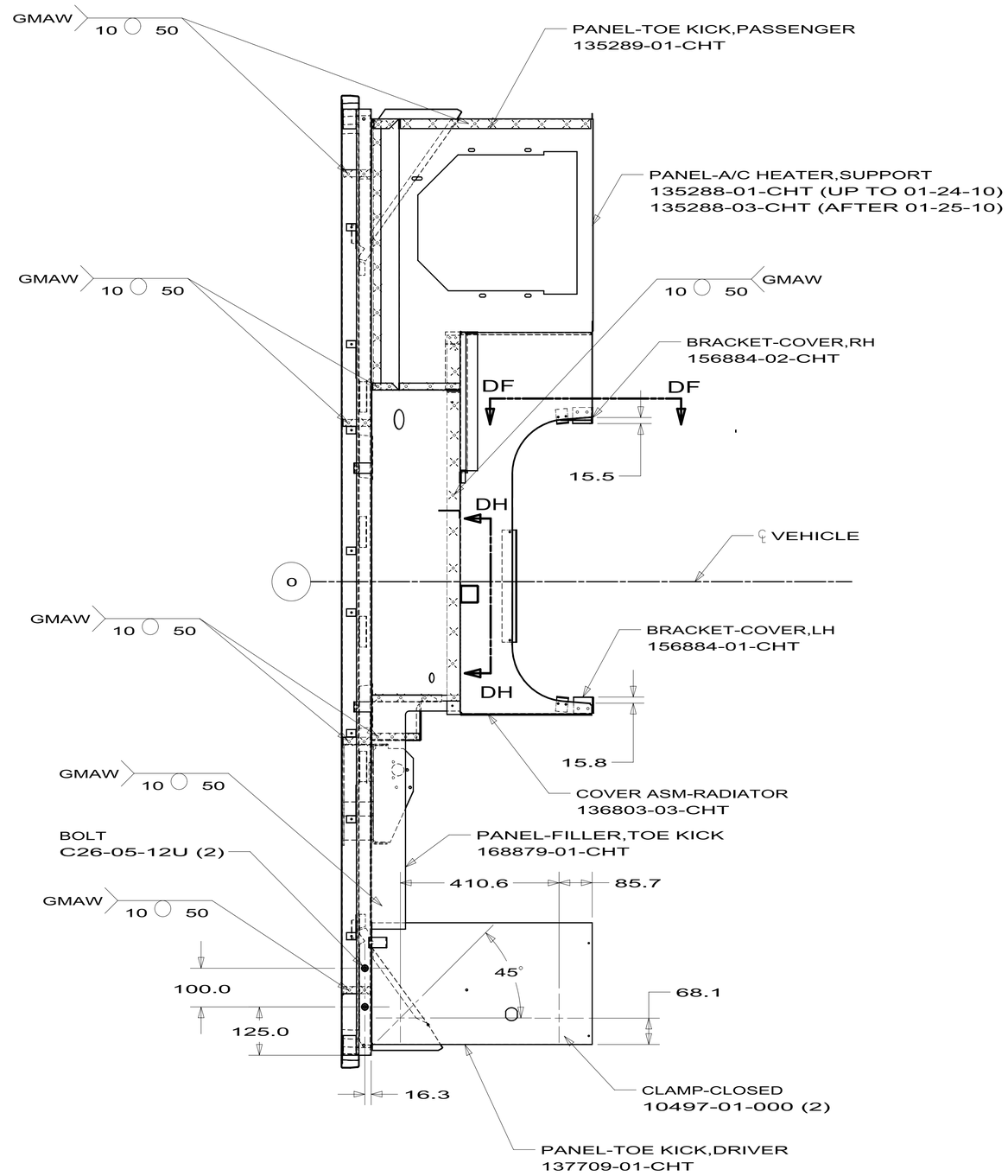

FIRST USED	09 J-SER,FL
	DO NOT SCALE DRAWING
TITLE:	FRONT END ASM
SHEET 3	PART NO 168875 REV

2/19/2010

DWG NO 168875

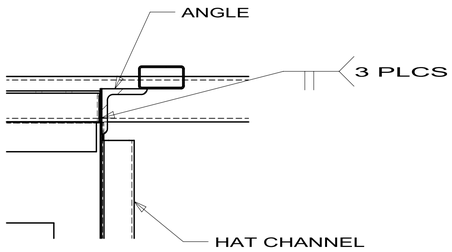

SECTION DA-DA

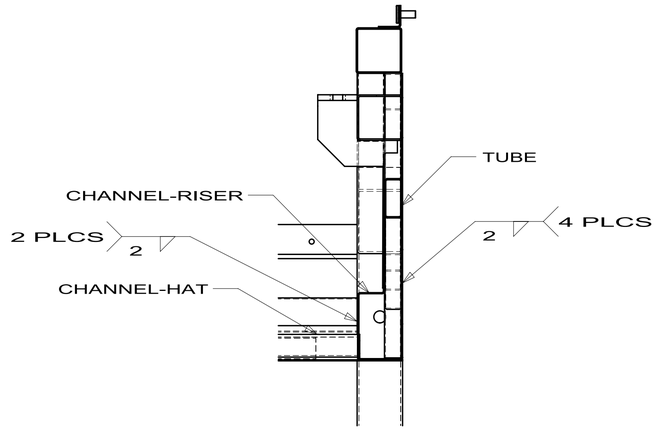

SECTION DB-DB

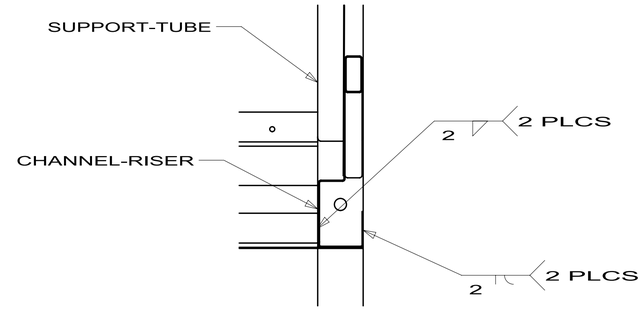

SECTION DC-DC

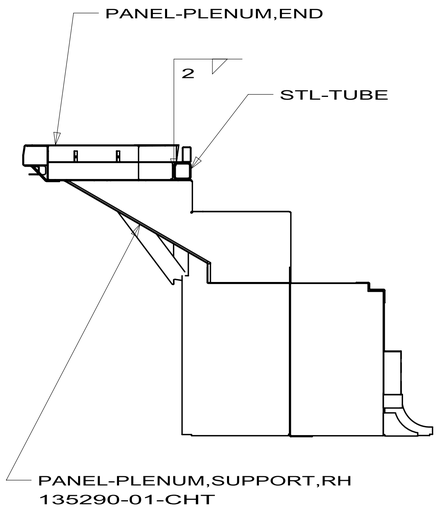

SECTION DD-DD

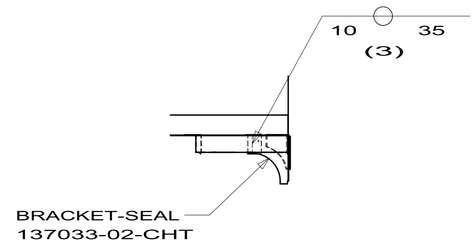

SECTION DF-DF

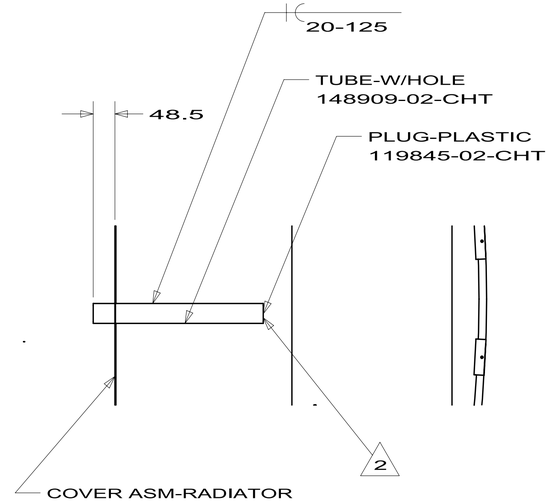

SECTION DH-DH

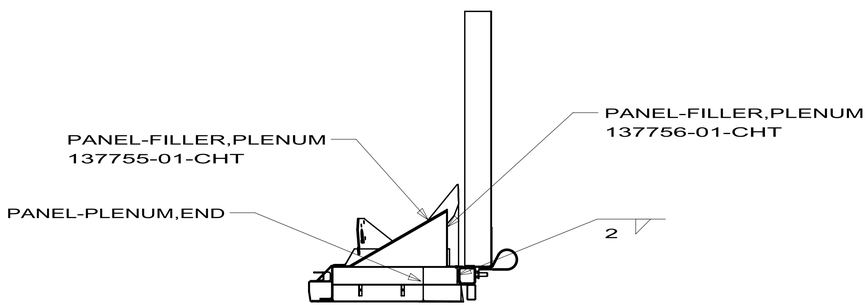

SECTION DE-DE

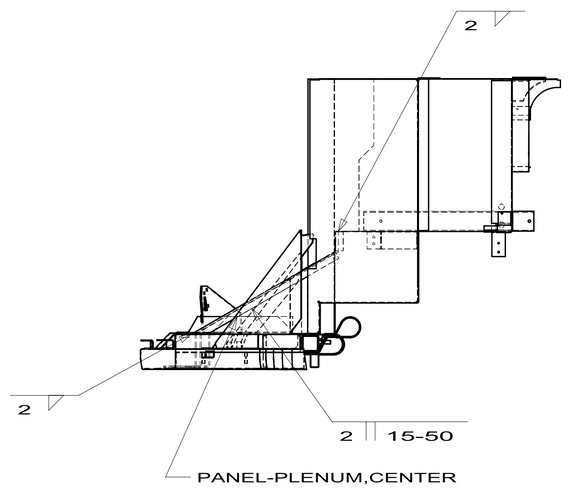

VIEW DG

FIRST USED	09 J-SER,FL
	DO NOT SCALE DRAWING
TITLE:	FRONT END ASM
SHEET 4	PART NO 168875 REV

2/19/2010

DWG NO 168875

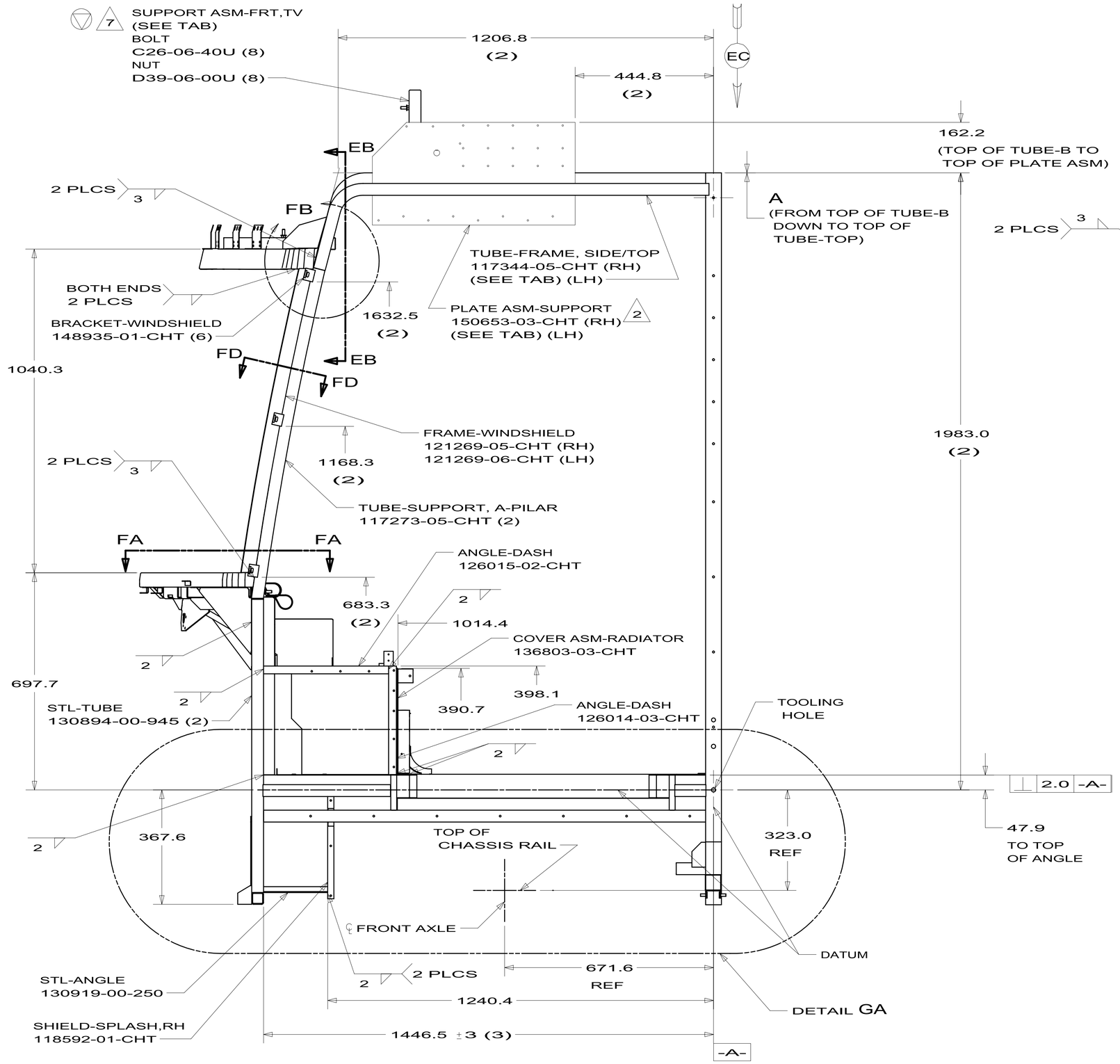

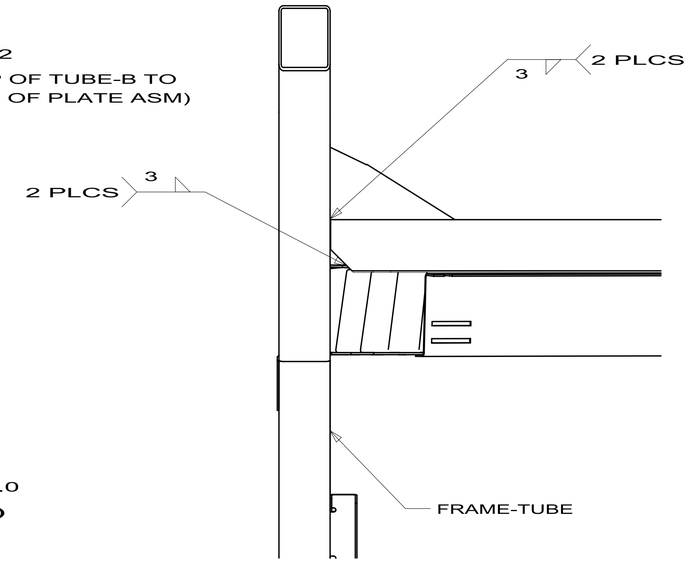

SECTION EB-EB

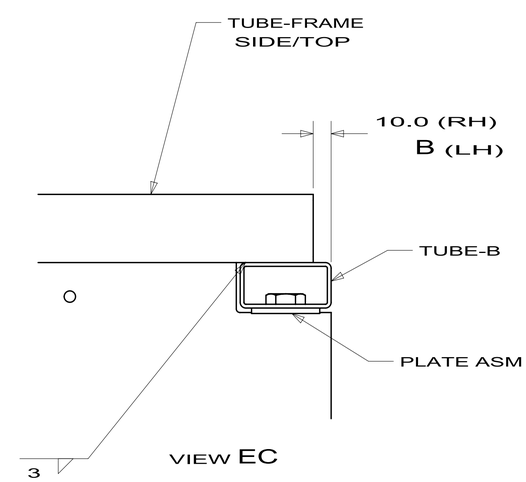

VIEW EC

FIRST USED	09 J-SER,FL
DO NOT SCALE DRAWING	
TITLE: FRONT END ASM	
SHEET 5	PART NO 168875 REV

2/19/2010

DWG NO 168875

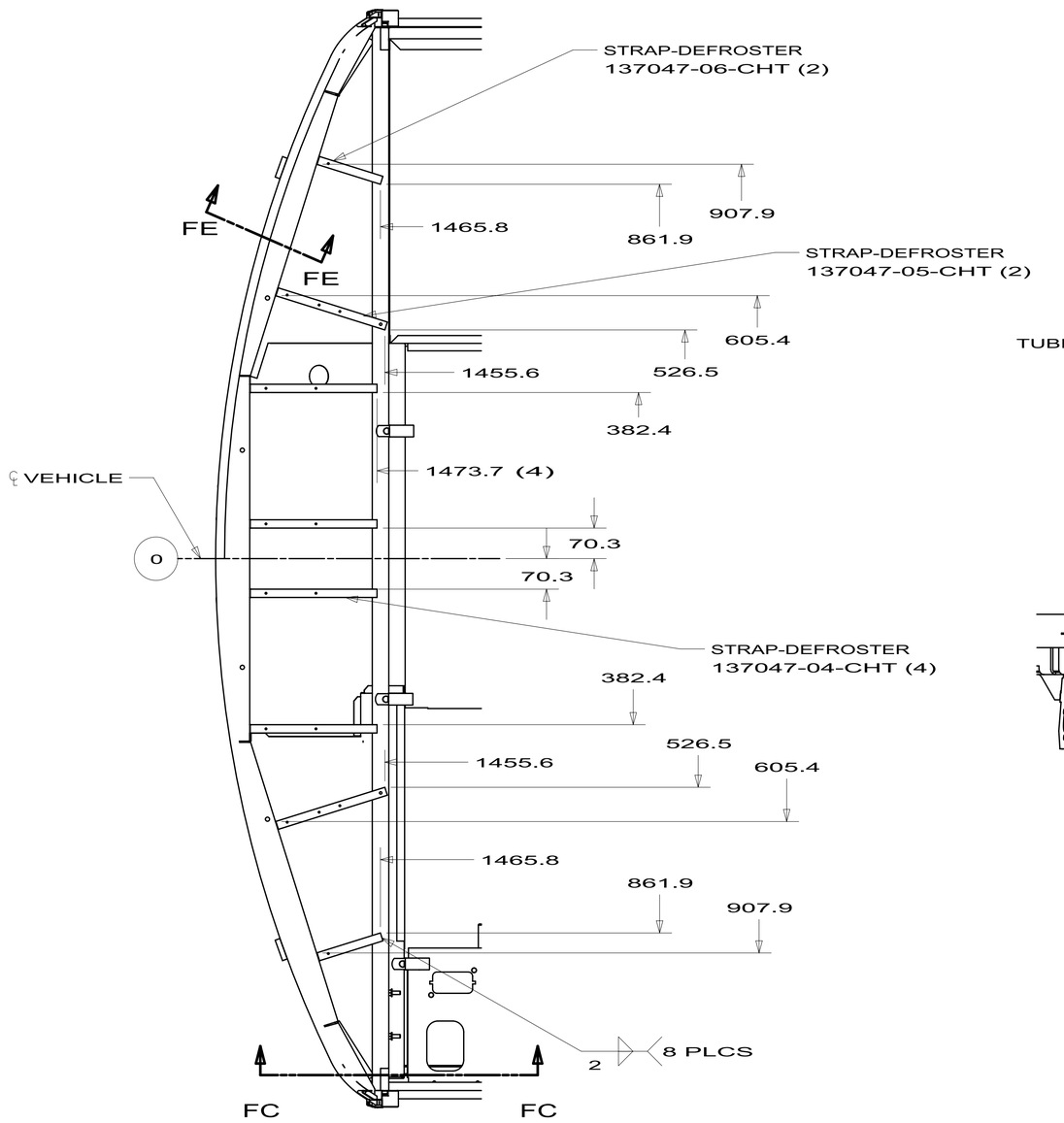

SECTION FA-FA

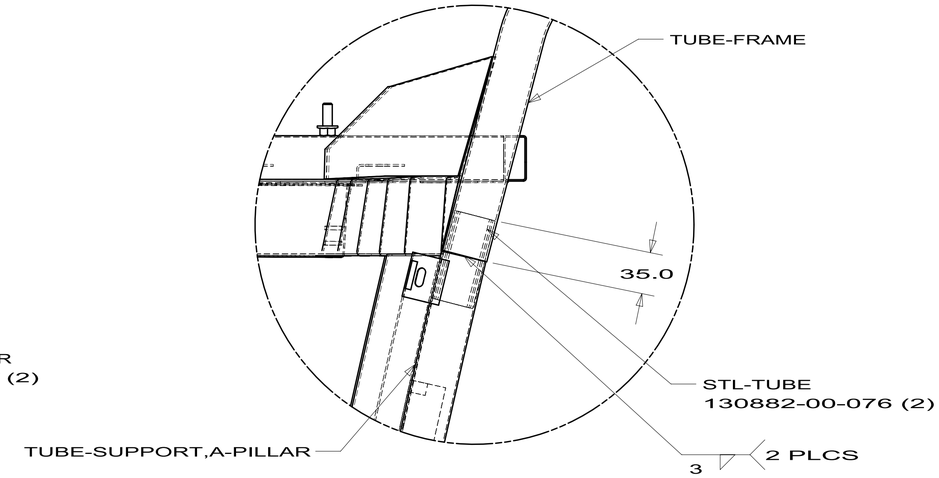

DETAIL FB

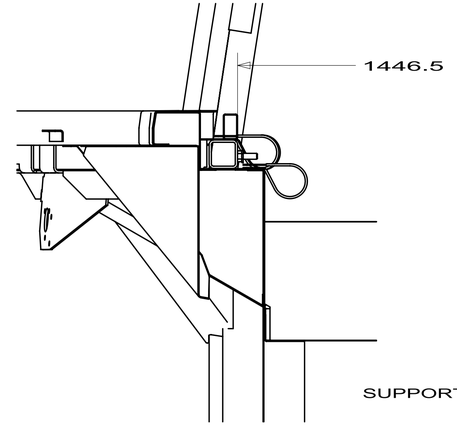

SECTION FC-FC

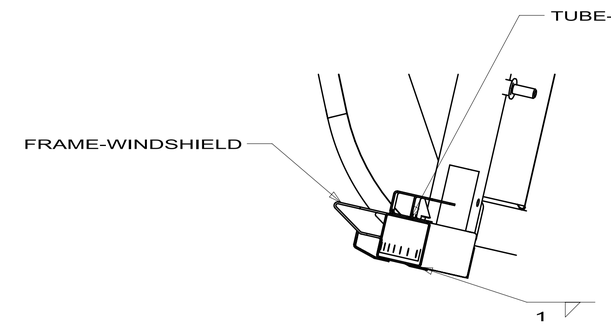

SECTION FD-FD

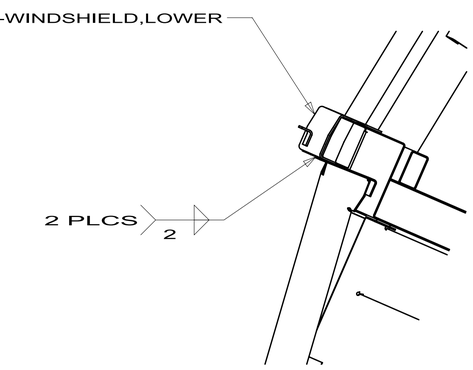

SECTION FE-FE

FIRST USED	09 J-SER,FL
DO NOT SCALE DRAWING	
TITLE:	FRONT END ASM
SHEET 6	PART NO 168875 REV

2/19/2010

DWG NO 168875

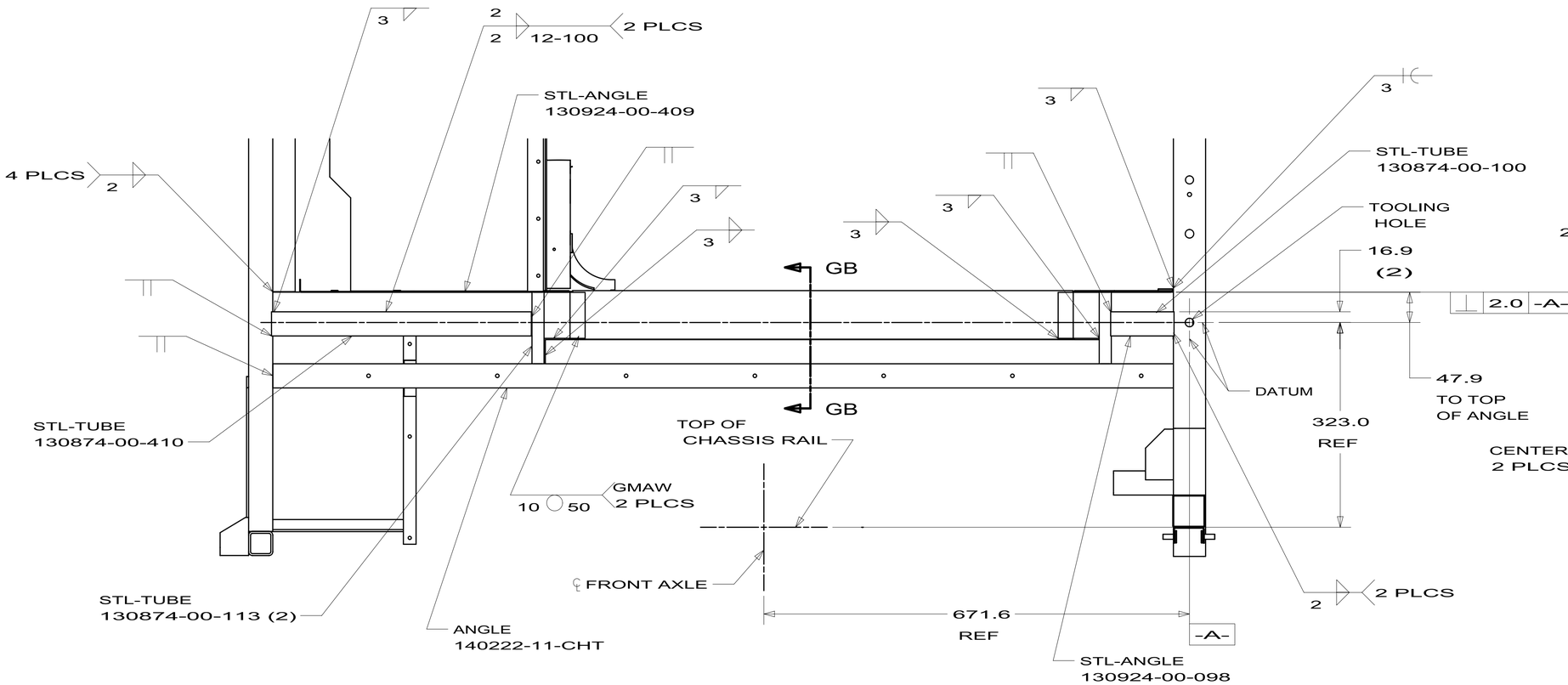

DETAIL GA

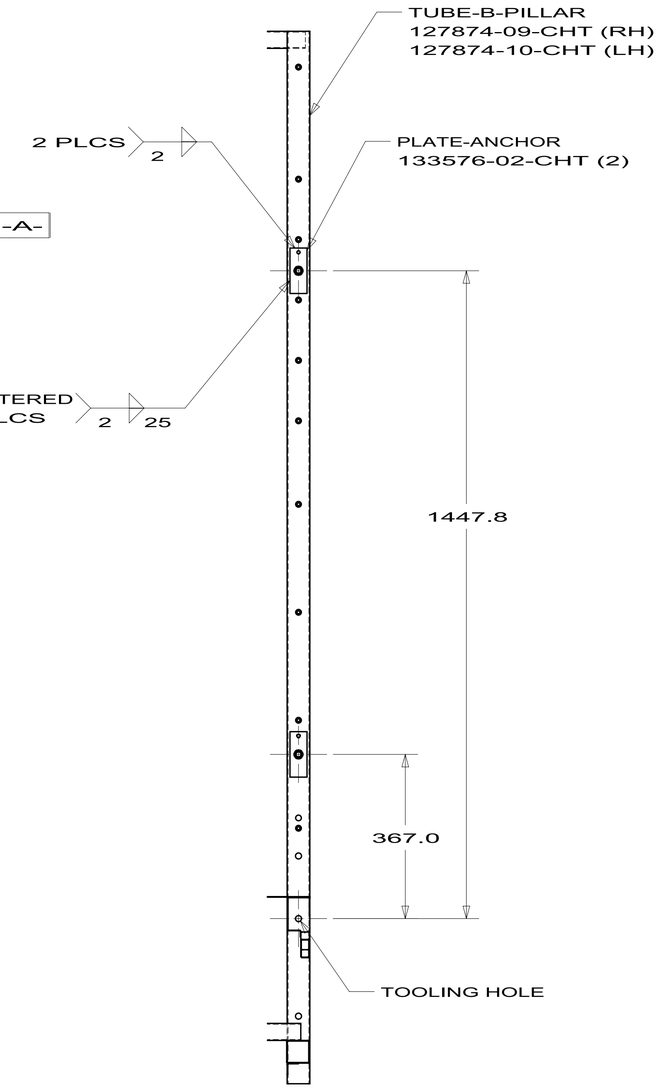

SECTION GC-GC
(SHOWN)
SECTION GD-GD
(OPPOSITE)

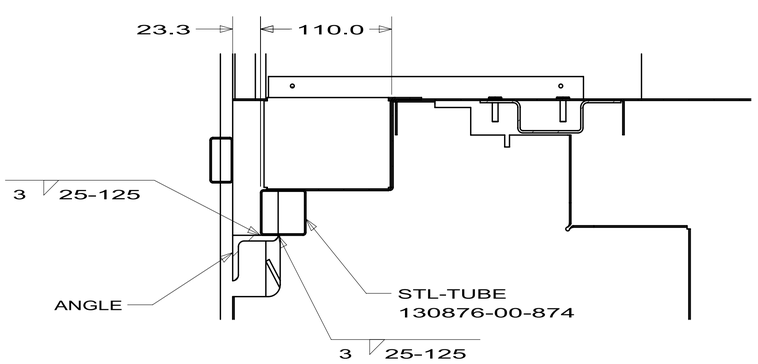

SECTION GB-GB

FIRST USED	09 J-SER,FL
DO NOT SCALE DRAWING	
TITLE:	FRONT END ASM
SHEET 7	PART NO 168875 REV

2/19/2010

DWG NO 168875

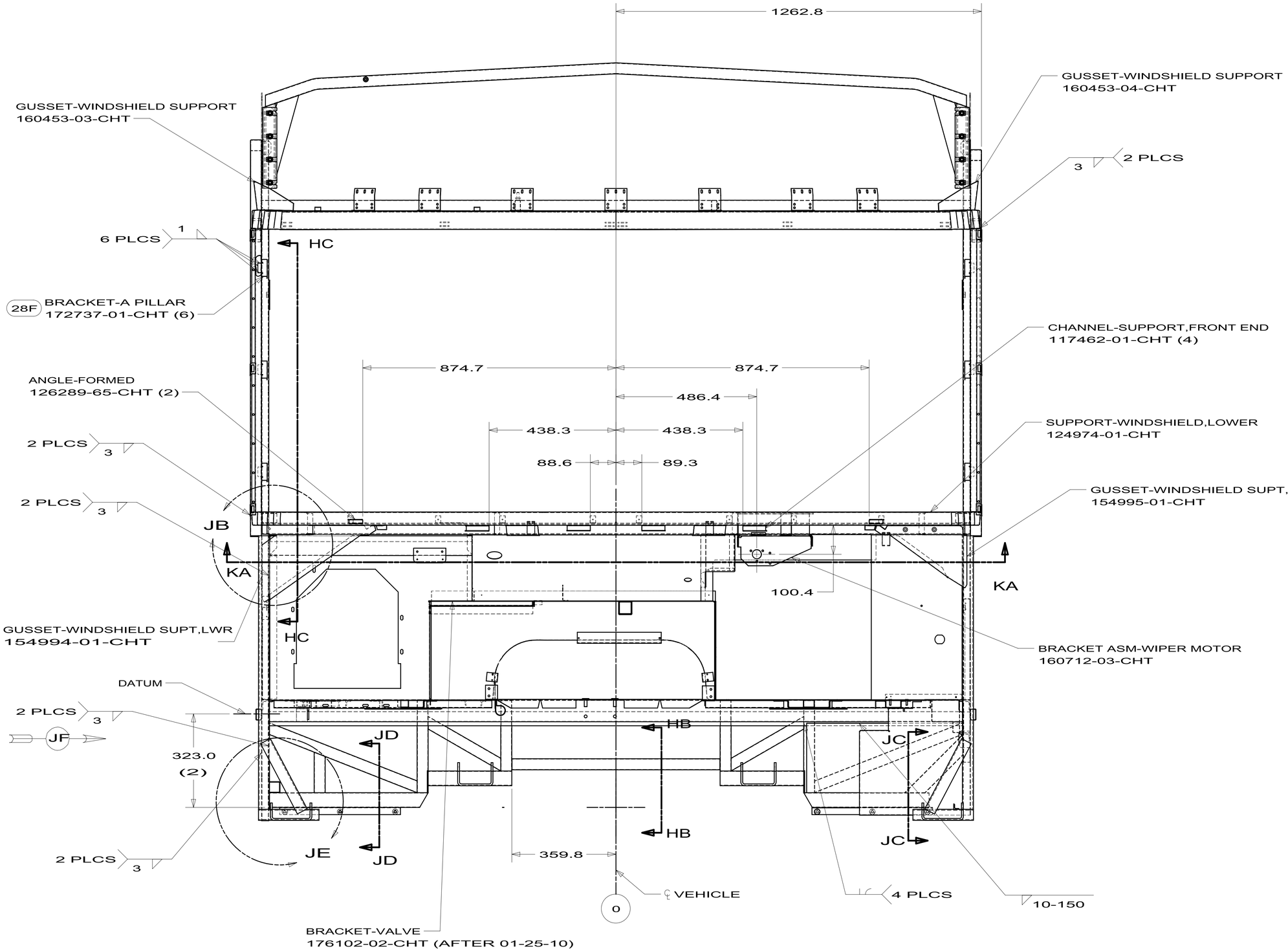

VIEW HA

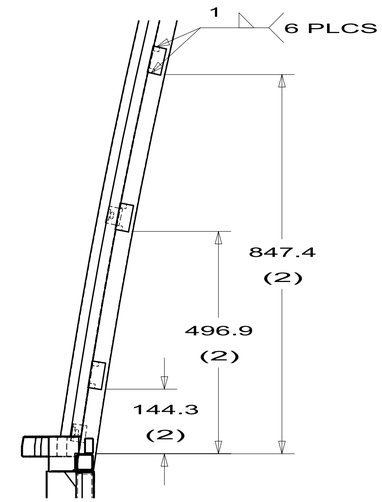

SECTION HC-HC

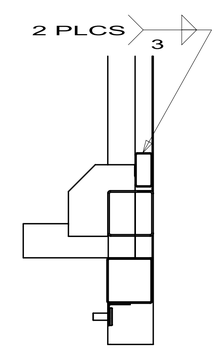

SECTION HB-HB

FIRST USED	09 J-SER,FL
DO NOT SCALE DRAWING	
TITLE:	FRONT END ASM
SHEET 8	PART NO 168875 REV

3/4/2010

DWG NO 168875

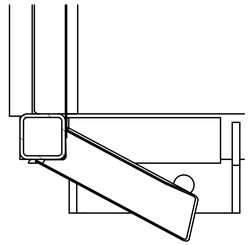

SECTION JA-JA

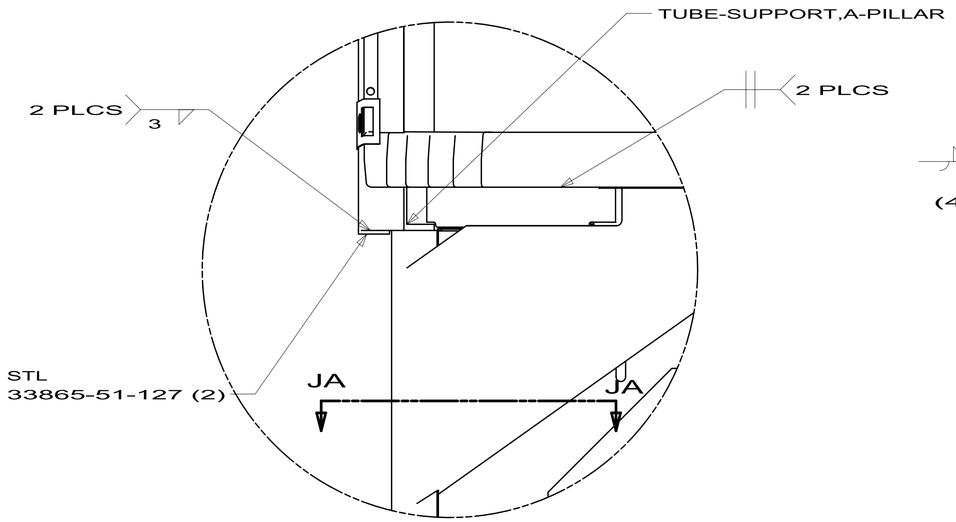

DETAIL JB

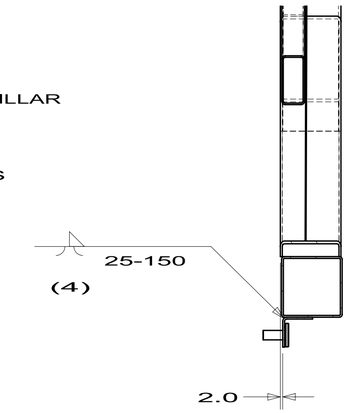

SECTION JC-JC

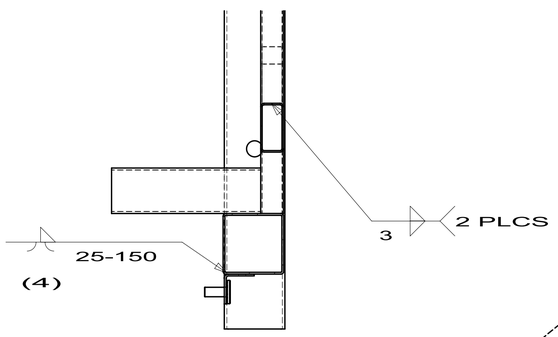

SECTION JD-JD

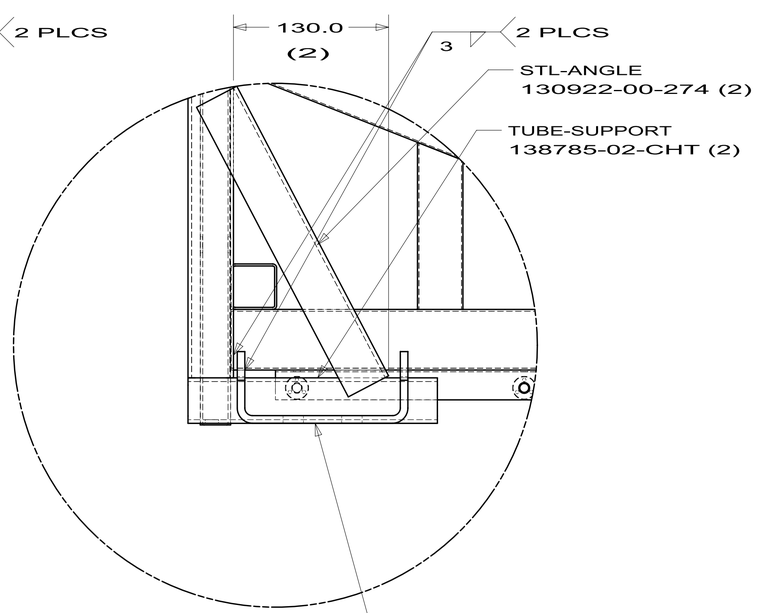

DETAIL JE

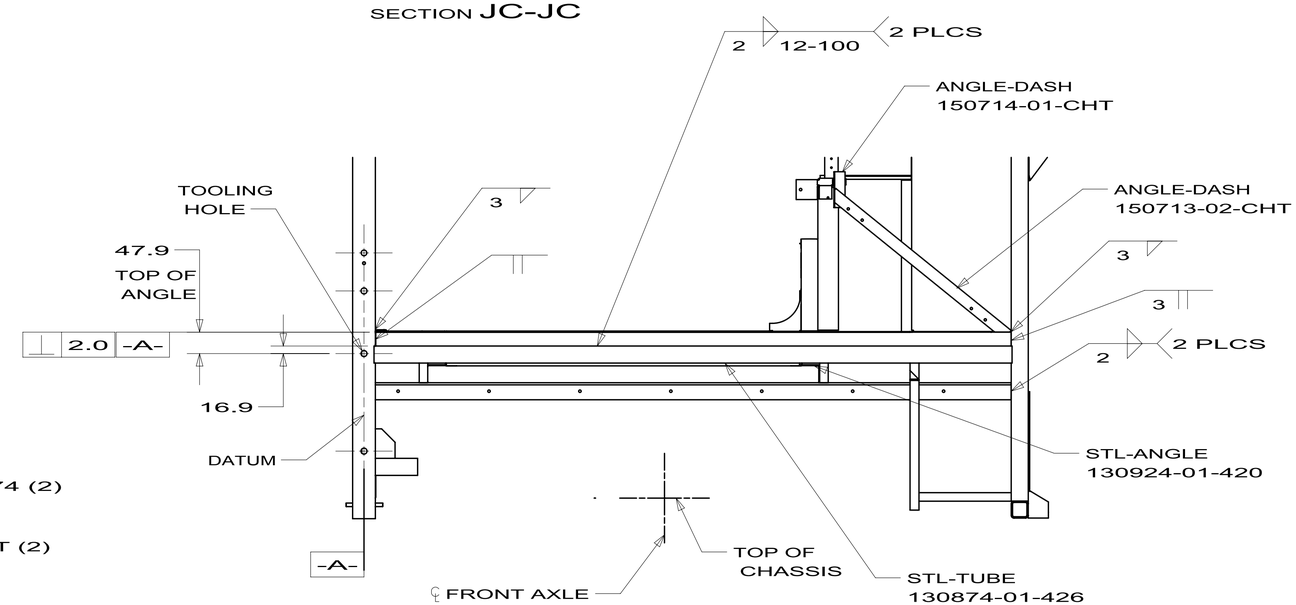

VIEW JF

FIRST USED	09 J-SER,FL
DO NOT SCALE DRAWING	
TITLE:	FRONT END ASM
SHEET 9	PART NO 168875 REV

2/19/2010

DWG NO 168875

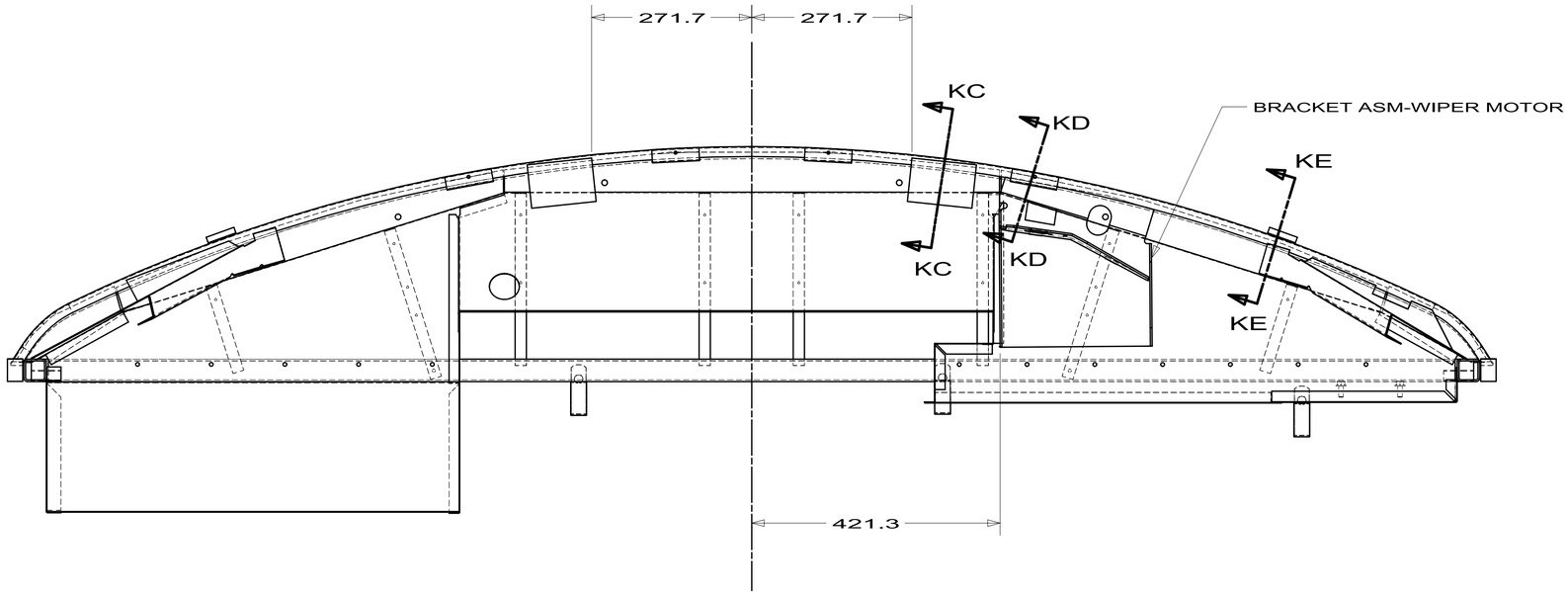

SECTION KA-KA

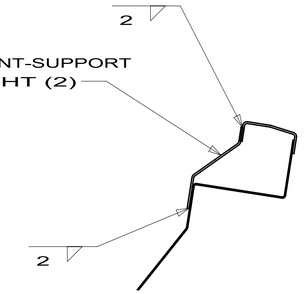

SECTION KC-KC
(2 PLCS)

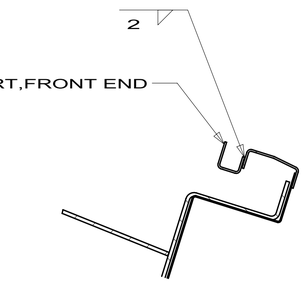

SECTION KD-KD
(4 PLCS)

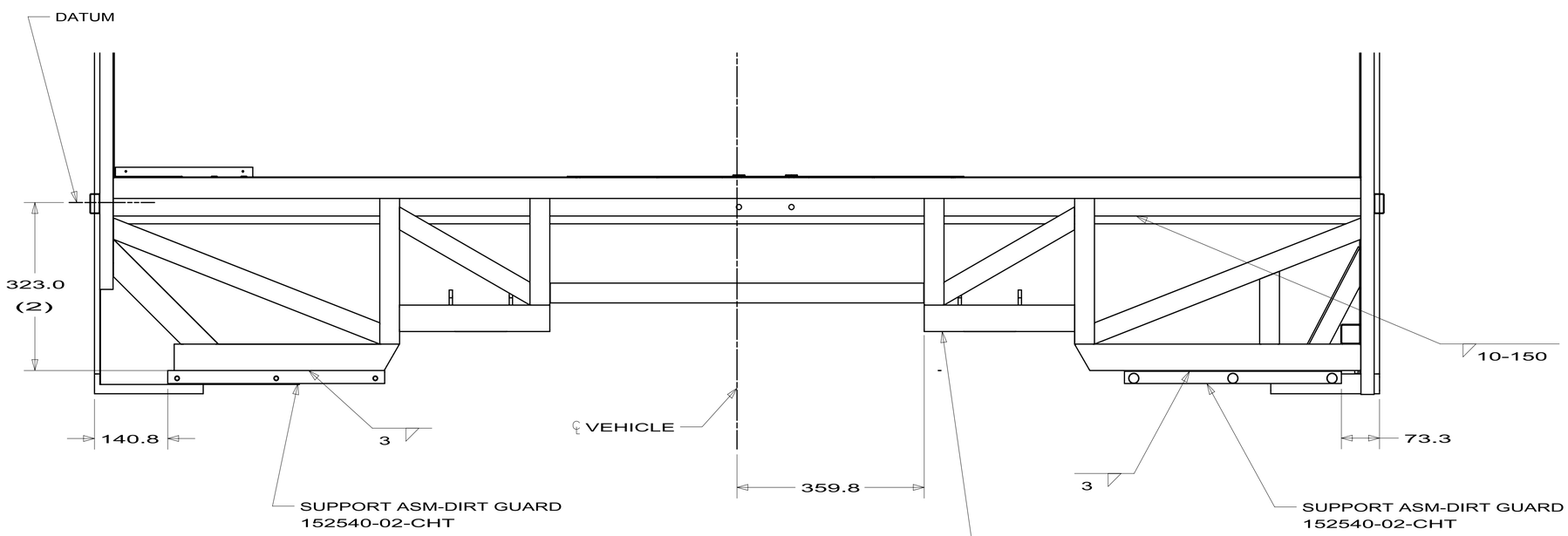

VIEW KB

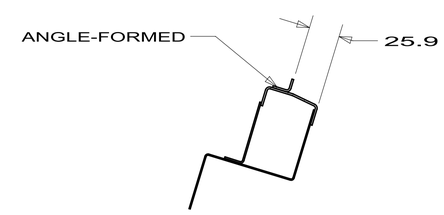

SECTION KE-KE
(2 PLCS)

FIRST USED	09 J-SER,FL
	DO NOT SCALE DRAWING
TITLE:	FRONT END ASM
SHEET 10	PART NO 168875 REV

2/19/2010

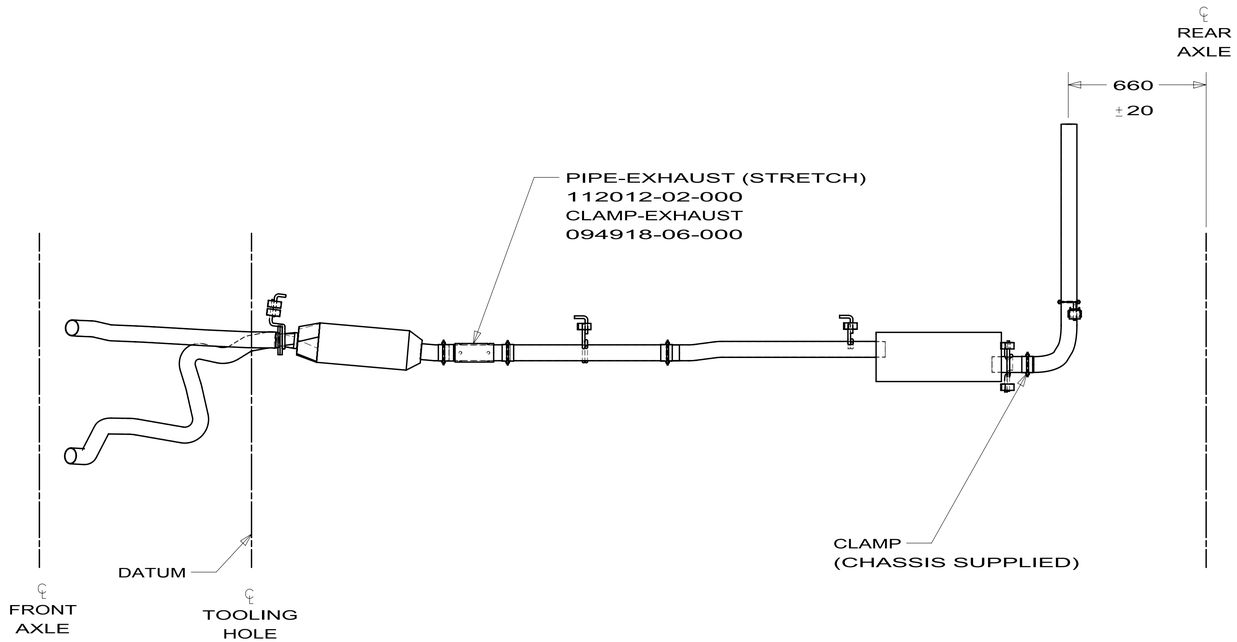

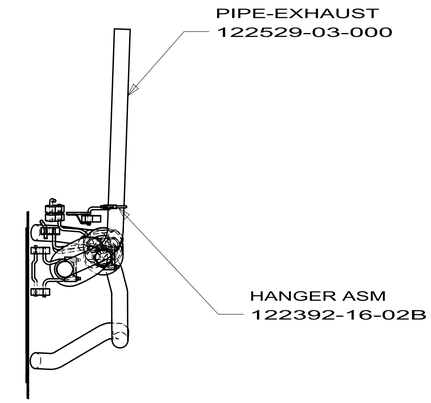

D33C,J32H
167164-06

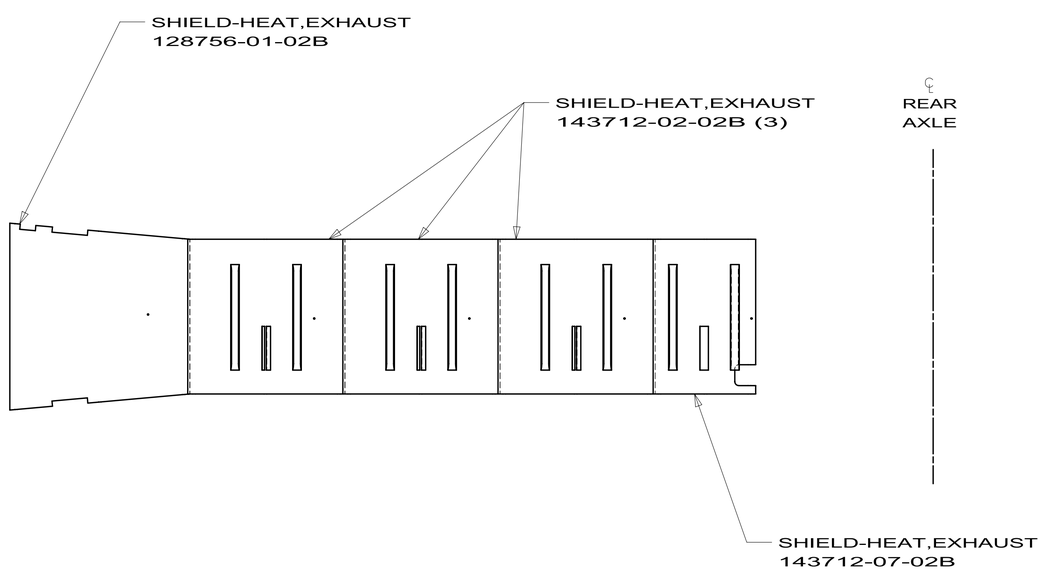

STRETCH 208" WHEELBASE
TO 220" WHEELBASE

EXHAUST SYSTEM INSTL-FORD
167164

10/31/2009

DWG NO 175444

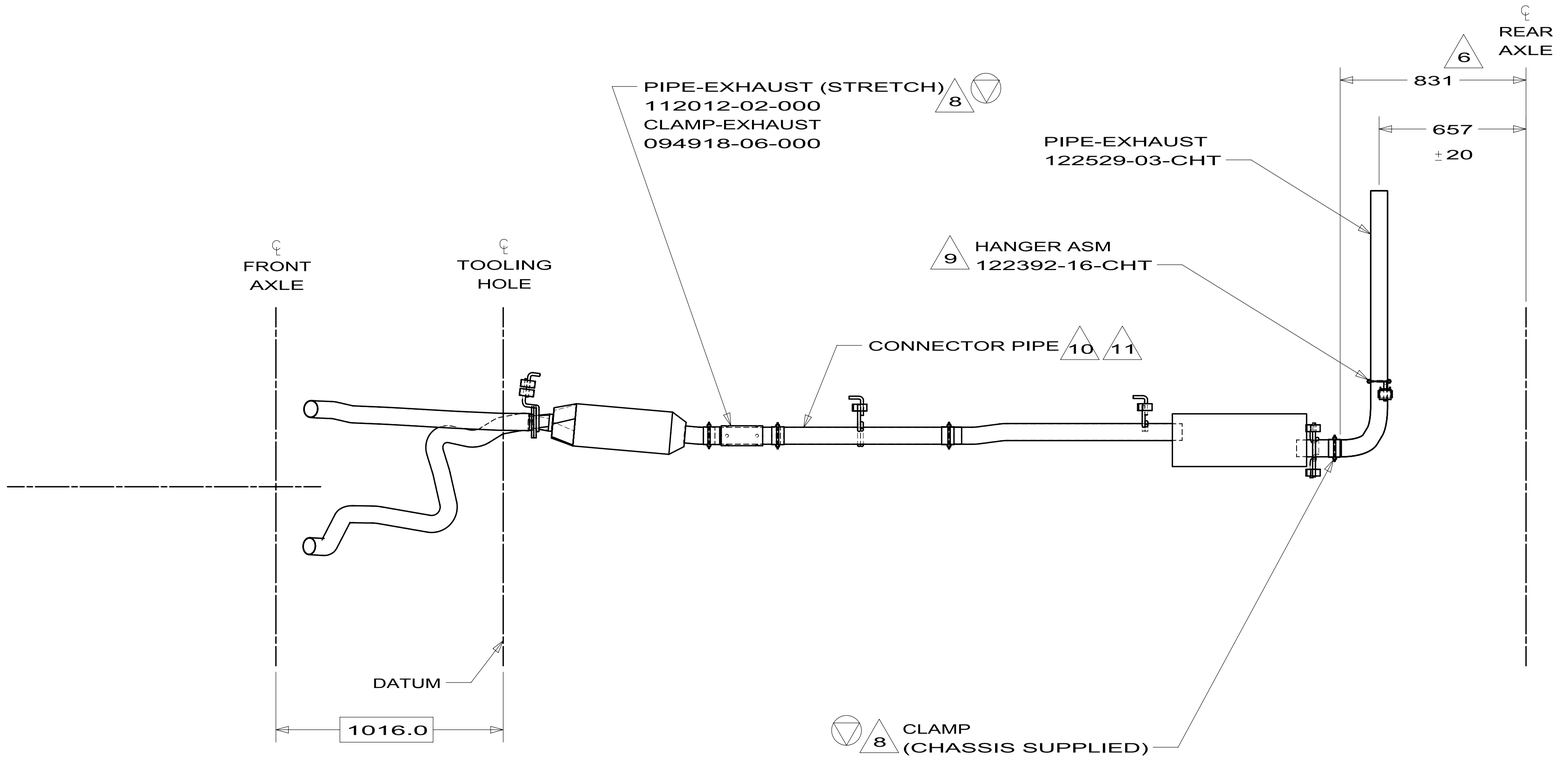

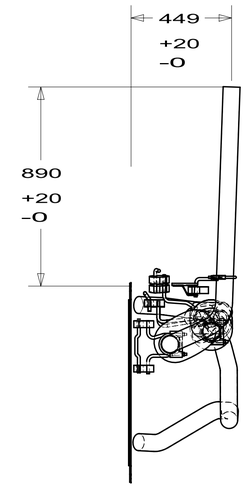

175444-05
D33C/J32H

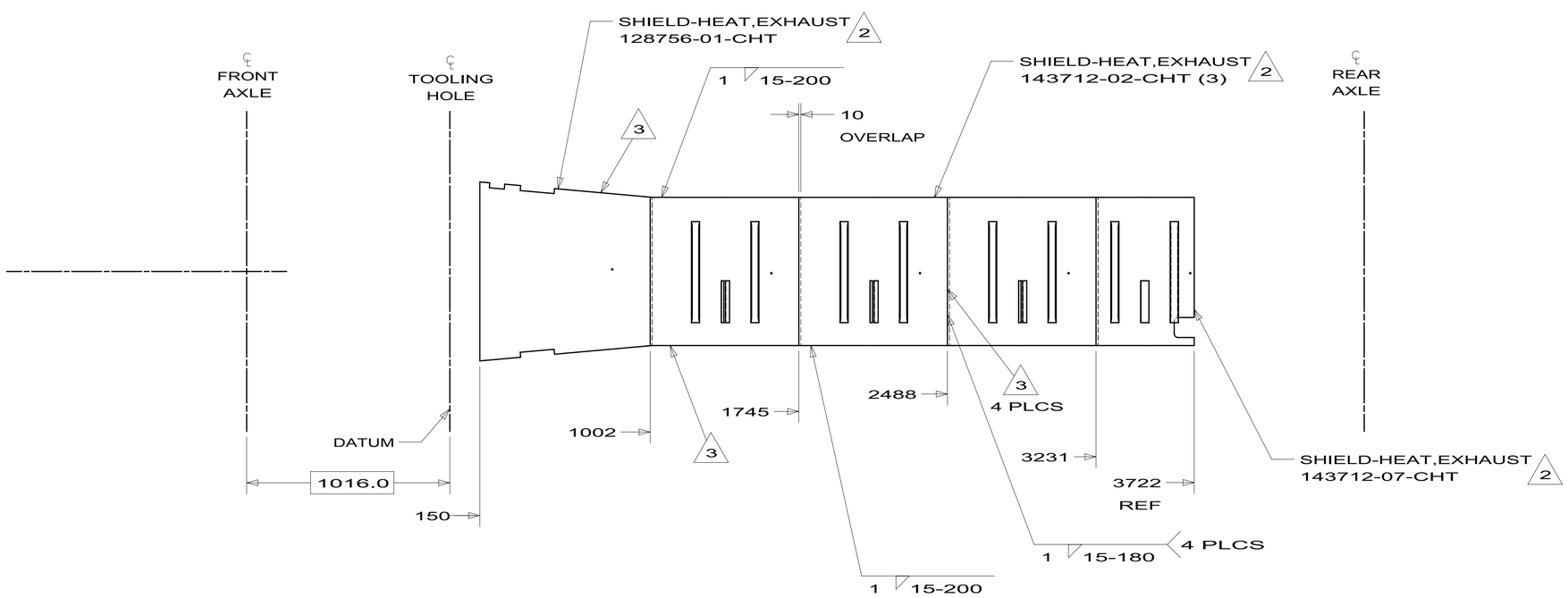

175444-05
D33C/J32H
STRETCH 208" WHEELBASE
TO 220" WHEELBASE

FIRST USED	11 FD MH
	DO NOT SCALE DRAWING
TITLE:	EXHAUST SYSTEM INSTL-FD
SHEET 6	PART NO 175444 REV

2/25/2010

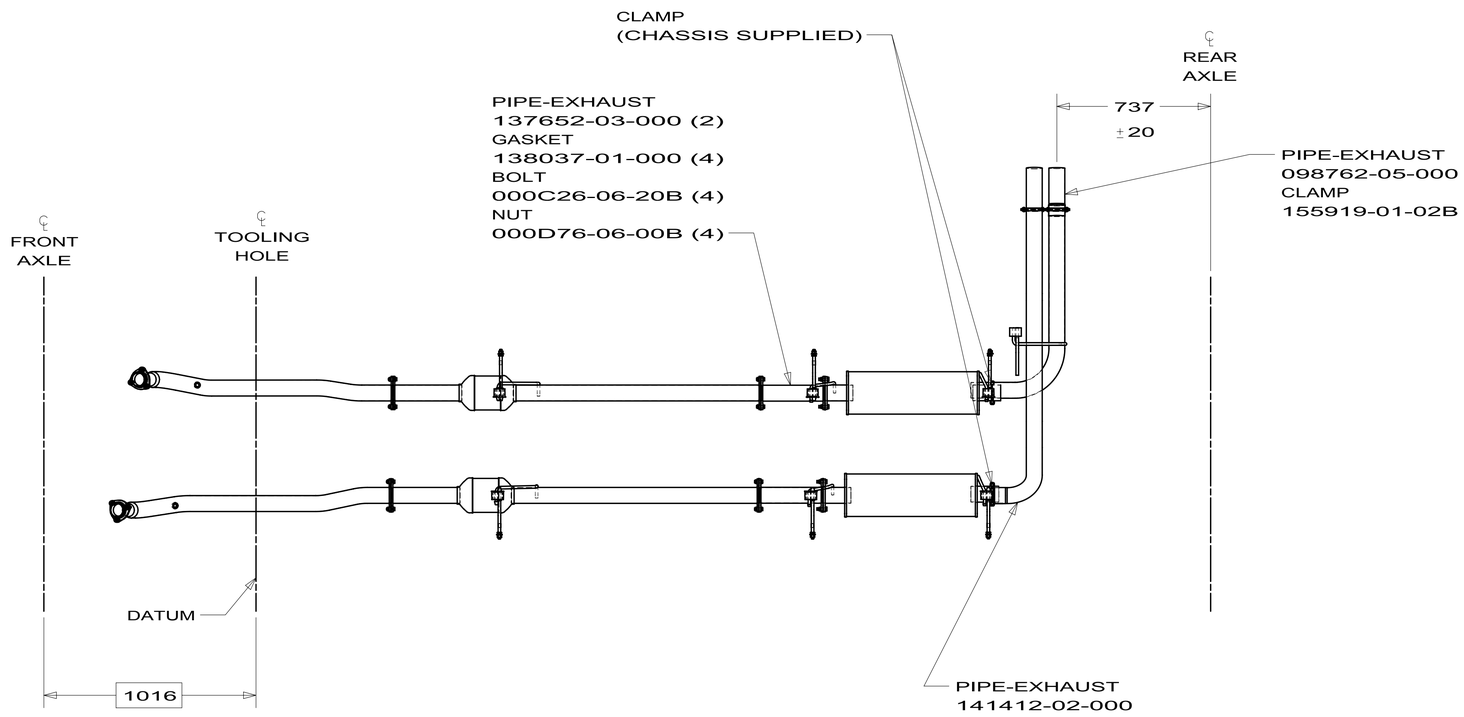

D33C
J32H
167341-03

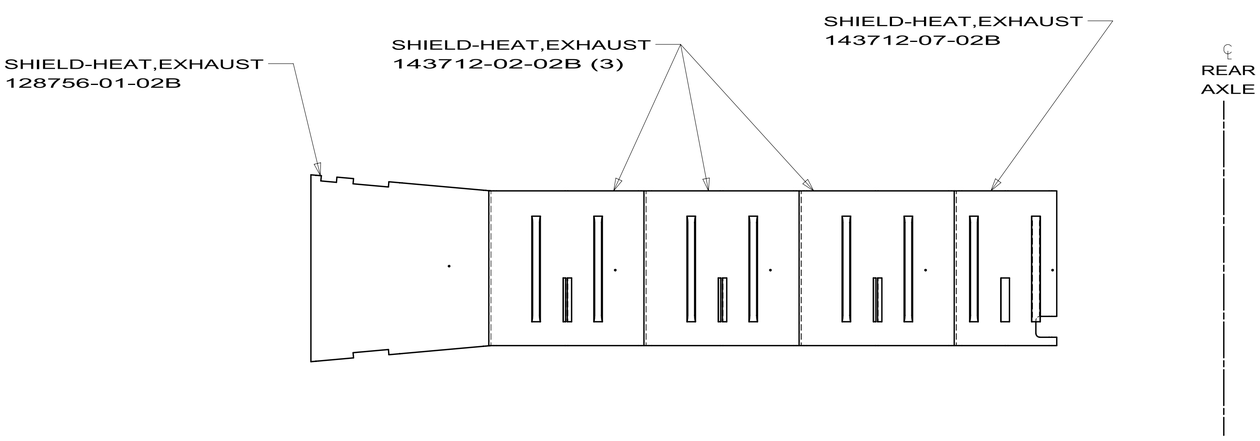

STRETCH 208" WHEELBASE
TO 220" WHEELBASE

EXHAUST SYSTEM INSTL-WH
167341

10/30/2009

DWG NO	WHEELBASE	UNIT	SHEET
168983-01	220"	J32H	1
168983-02	228"	J35P,J35Z	2
168983-03	248"	J37F,J38N	3

RELEASE	REV A	DATE	DWG NO 168983
REV	ZONE	REVISION RECORD	DATE	DFTR-ORIG

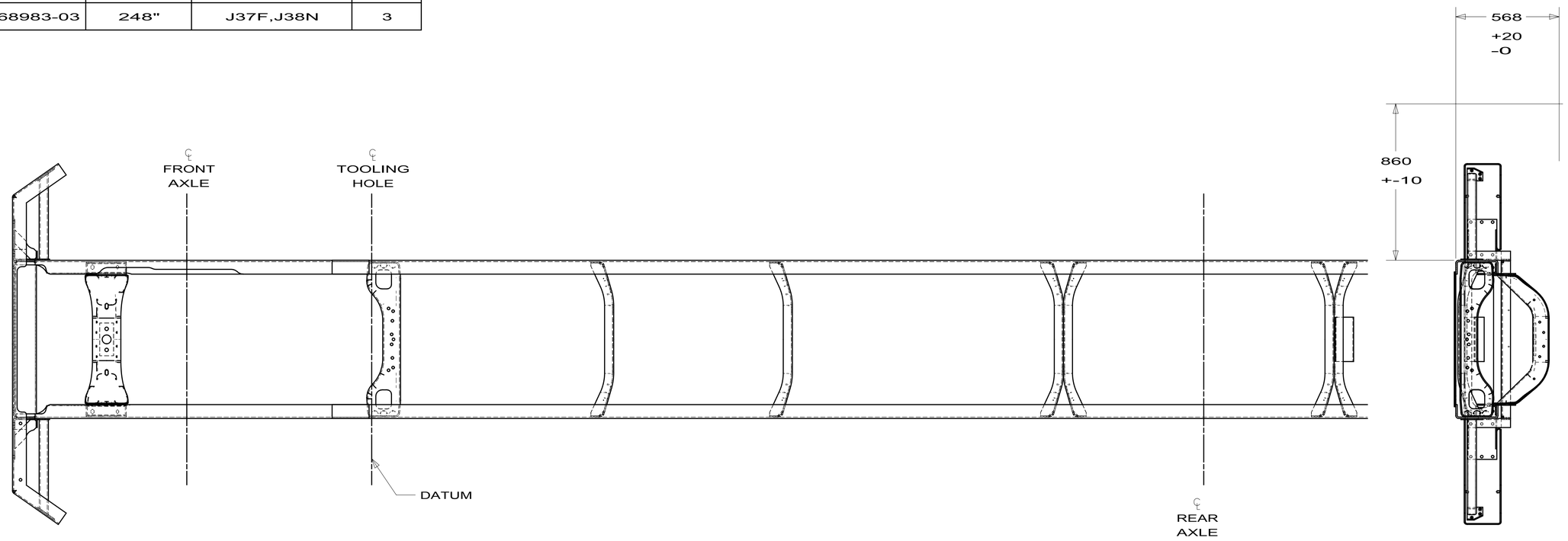

J32H

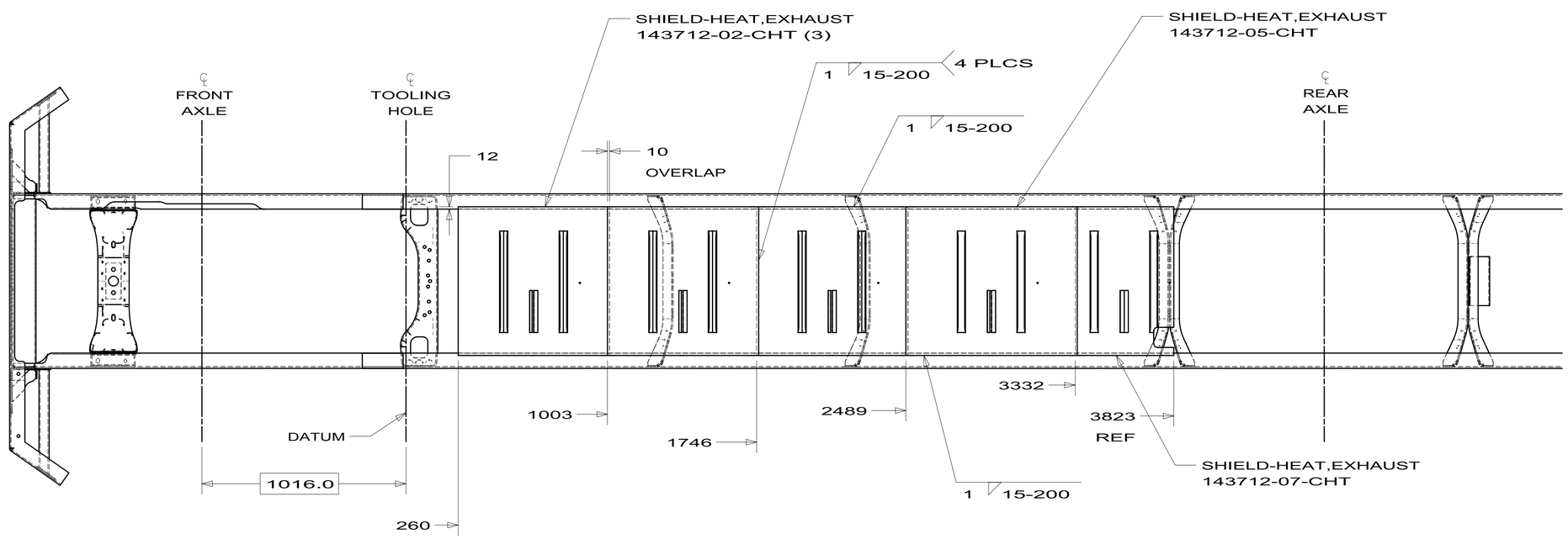

220" WHEELBASE

INDICATES CRITICAL SAFETY PROCEDURE TO BE FOLLOWED

WINNEBAGO INDUSTRIES

COPYRIGHT 2009
WINNEBAGO
INDUSTRIES, INC.

DFTR	ORIG. DATE
CHKR	ALL DIMENSIONS ARE IN MILLIMETERS
P.E.	
M.E.	FIRST USED
DSNR	09 J-SER,FL

UNSPECIFIED TOLERANCES ARE:
WHOLE DIM (X) : 3
ONE-PLACE (X.X) : 1.5
TWO-PLACE (X.XX) : 0.50
ANGLE : 1°

MATERIAL:

THIRD ANGLE PROJECTION

DO NOT SCALE DRAWING

TITLE: EXHAUST SYSTEM INSTL

SHEET 1 OF 3 | PART NO 168983 | REV

REF:

DWG NO 155029

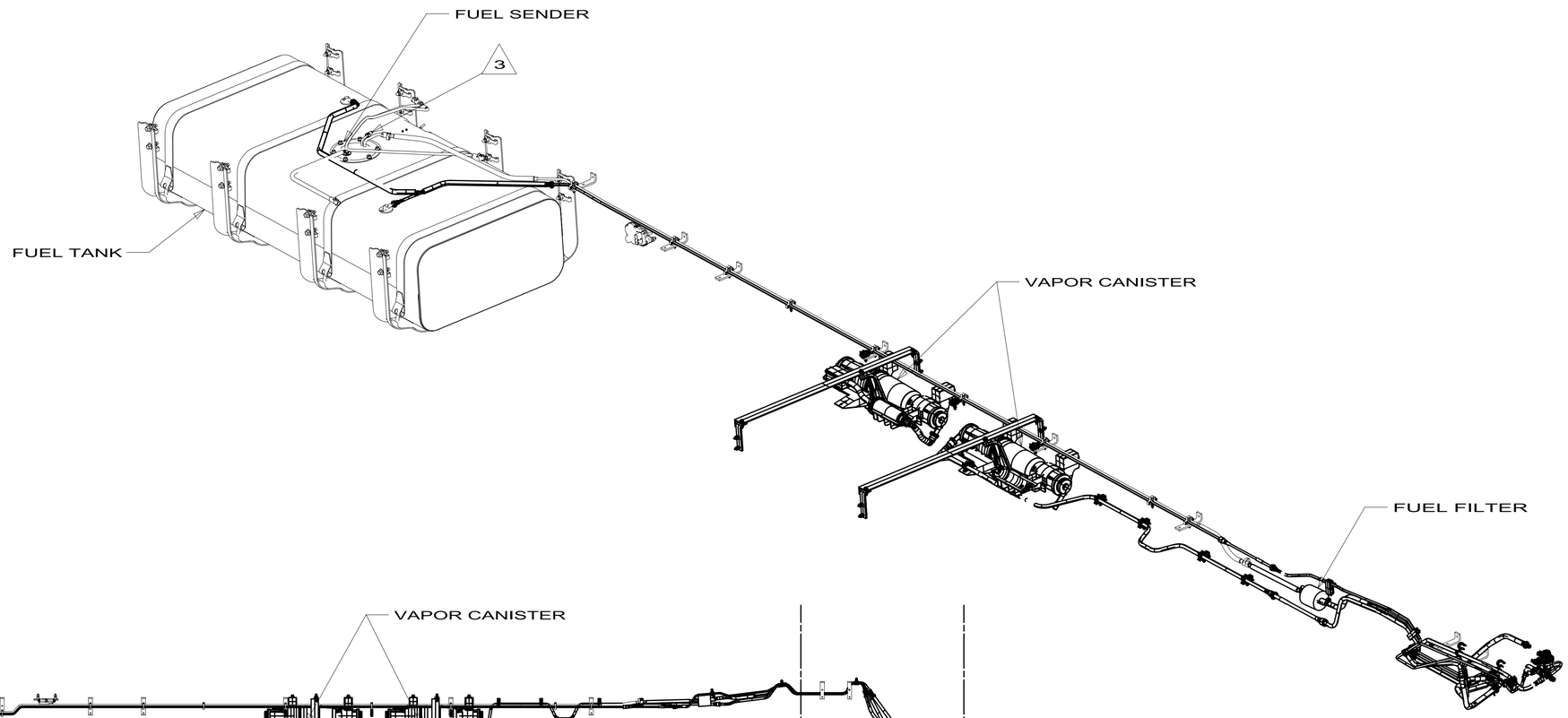

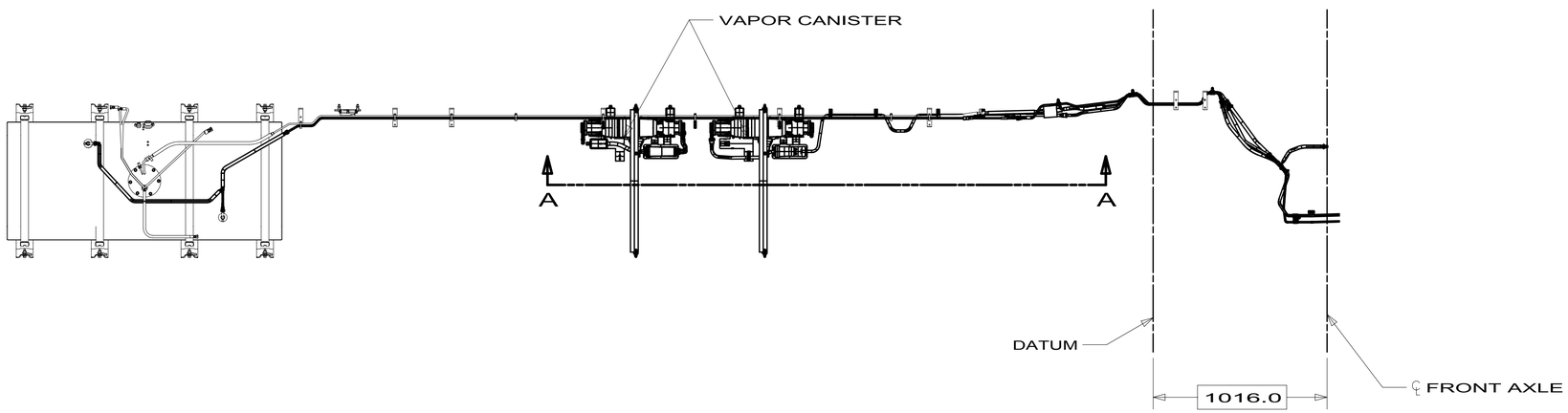

D33C
J32H
155029-03

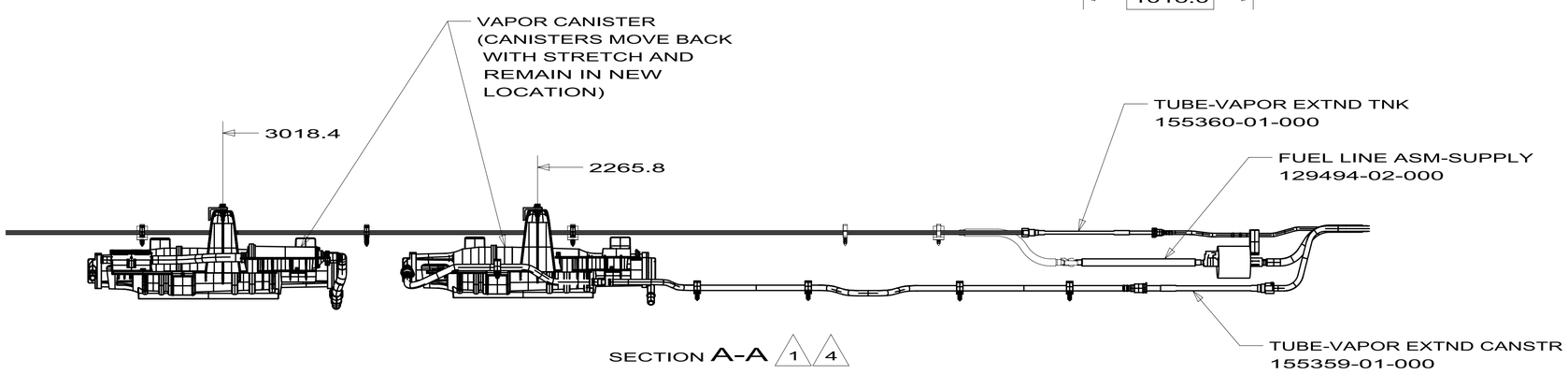

SECTION A-A 1 4

220" WHEELBASE
208" STRETCHED TO 220"

FIRST USED	2006 F53 FORD
DO NOT SCALE DRAWING	
TITLE:	FUEL SYSTEM INSTL-SUPPLY
SHEET 3	PART NO 155029 REV

10/21/2009

DWG NO 175442

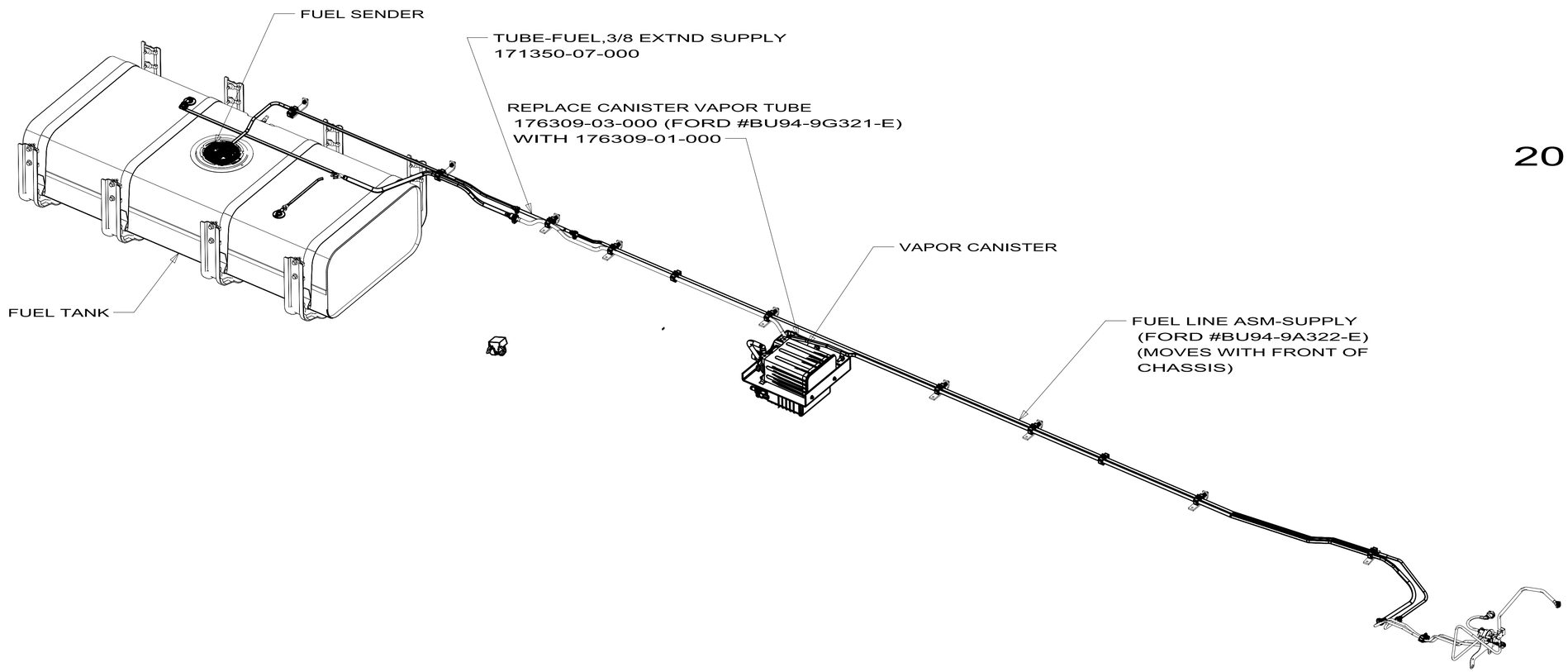

D33C
J32H
175442-06
2011 FORD CHASSIS

220"WHEELBASE
208" STRETCHED TO 220"

FIRST USED	11 FD MH
DO NOT SCALE DRAWING	
TITLE:	FUEL SYSTEM INSTL-SUPPLY
SHEET 6	PART NO 175442 REV

2/25/2010

DWG NO	WHEEL BASE	FUEL LINE ASM-SUPPLY	TUBE-EVAP EMIS, CANISTER	
149048-01	190"	------	------	E30W
149048-02	208"	------	------	D31E D33C E32K
149048-03	190" TO 220"	98759-05-000	148192-02-000	NOT USED
149048-04	208" TO 220"	98759-01-000	148192-02-000	J32H
149048-05	228"	------	-------	D35J, J35P, J35Z
149048-06	228" TO 248"	98759-02-000	148192-04-000	D37L J37F J38N
149048-07	228" TO 266"	98759-09-000	148192-05-000	NOT USED
149048-08	158.5"	------	------	E26P
149048-09	190" TO 208"	98759-02-000 △5	148192-06-000	NOT USED
149048-10	208" TO 228"	98759-02-000	148192-03-000	△7 J35Z,J35P STRETCH
149048-11	228" TO 220"	REPLACE W4976 (228) WITH W5115(208) ADD 98759-01-000 △8	148192-02-000	△7 NOT USED
149048-12	228" TO 208"	REPLACE W4976 (228) WITH W5115(208) ADD 98759-01-000 △8	148192-06-000	△7 NOT USED

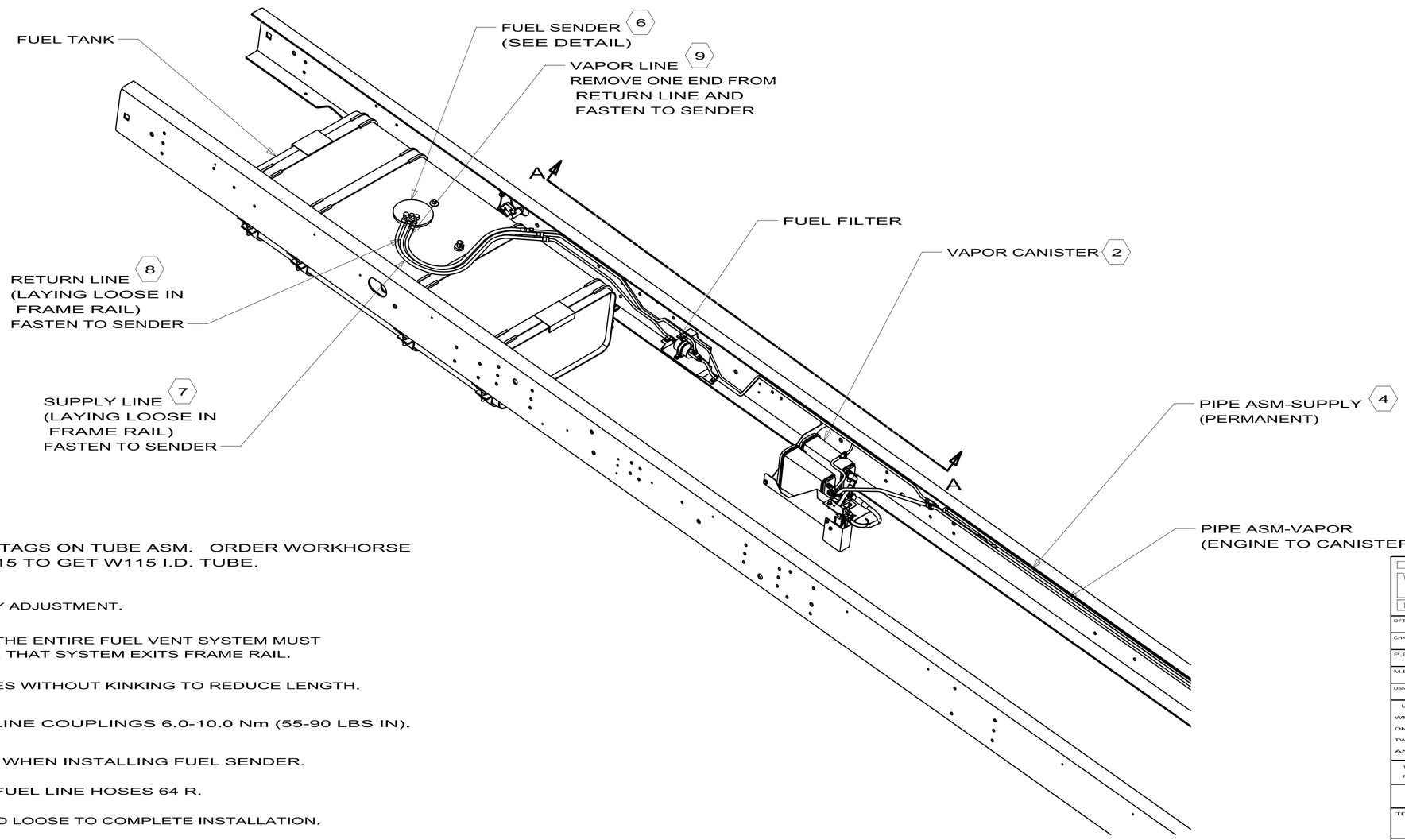

NOTES:

△8. W4976 & W5115 ARE I.D. TAGS ON TUBE ASM. ORDER WORKHORSE SERVICE PART W0005115 TO GET W115 I.D. TUBE.

△7. FOR WHEELBASE INVENTORY ADJUSTMENT.

6. TO PREVENT FUEL TRAPS, THE ENTIRE FUEL VENT SYSTEM MUST BE NO LOWER THEN WHERE THAT SYSTEM EXITS FRAME RAIL.

△5. HAND BEND OFFSET IN LINES WITHOUT KINKING TO REDUCE LENGTH.

4. ▽ TORQUE ALL FUEL LINE COUPLINGS 6.0-10.0 Nm (55-90 LBS IN).

△3. ▽ RE-USE O-RING SEAL WHEN INSTALLING FUEL SENDER.

2. MINIMUM BEND RADII OF FUEL LINE HOSES 64 R.

△1. WORKHORSE PART, SHIPPED LOOSE TO COMPLETE INSTALLATION.

RELEASE	REV A	DATE	DWG NO 149048

REV	ZONE	REVISION RECORD	DATE	DFTR-ORIG

COPYRIGHT 2009
WINNEBAGO
INDUSTRIES, INC.

DFTR	ORIG. DATE
CHKR	ALL DIMENSIONS ARE IN MILLIMETERS
P.E.	
M.E.	FIRST USED
DSNR	04 WH W20/22

UNSPECIFIED TOLERANCES ARE:
WHOLE DIM (X) : 3.0
ONE-PLACE (X.X) : 1.5
TWO-PLACE (X.XX) : 0.50
ANGLE : 1°

MATERIAL:

THIRD ANGLE PROJECTION

DO NOT SCALE DRAWING

TITLE:
FUEL SYSTEM INSTL-SUPPLY

SHEET 1 OF 2 | PART NO 149048 | REV

REF:

DWG NO 149048

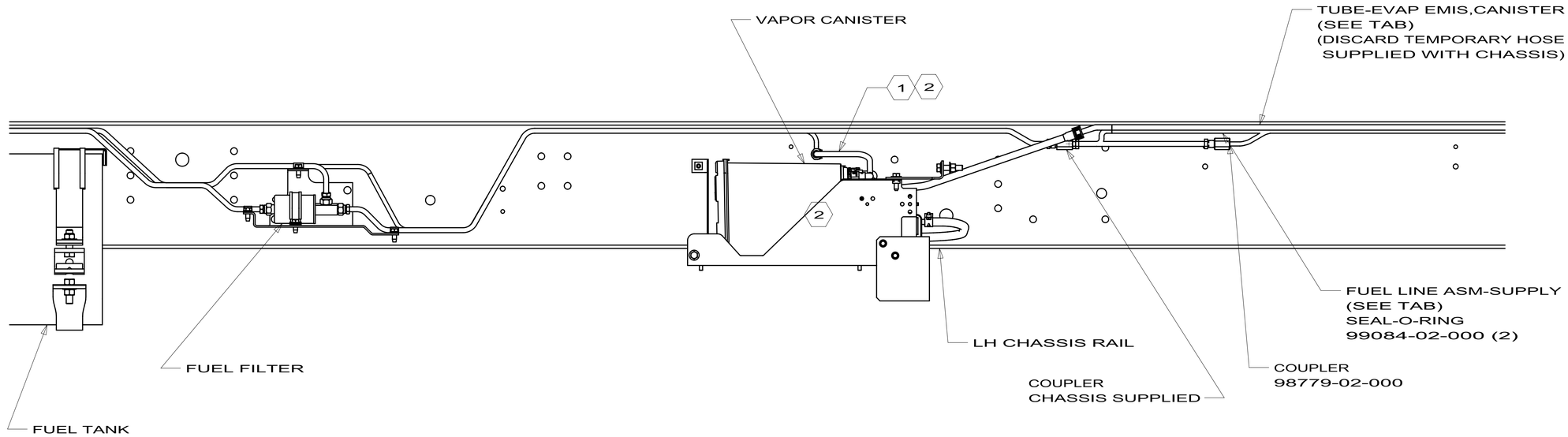

VIEW A-A
STRETCH DETAIL

Conversion Temporary to Final Fuel System

Relieve fuel pressure from system (service port on engine right fuel rail or run engine without electrical connection to pump/sender; see service manual @ Chassis Warranty)

1. Temporary hose from sender in temporary tank to vapor canister
   Disconnect both ends; remove from chassis and discard
2. Vapor Canister
   Remove plastic bag from permanent vapor line fitting
   Connect permanent fitting to canister port (temporary hose disconnected)
3. Fuel Sender temporary feed/return hoses to wye with green retainer clips
   Release clips and push thru opposite side of connector
   Pull fittings loose
4. Fuel rail on engine
   Disconnect temporary line (from fuel sender/wye) and discard
   Remove cap from permanent supply line; Connect line at rail
5. Fuel Sender, temporary tank, hoses disconnected
   Remove retaining ring; carefully remove sender
6. Fuel tank, chassis mounted between frame rails, aft of axle
   Remove retaining ring, discard temporary block off plate
   Carefully install sender, index in notch, install retaining ring

1 Chassis Fuel Lines at tank

7. Black Braid hose, Red FEED tag; connect to sender port arrow out (to end)
8. Black Braid hose, Green RETURN tag; connect to sender port arrow in (to center)
9. Black Plastic tube; connect to remaining sender port

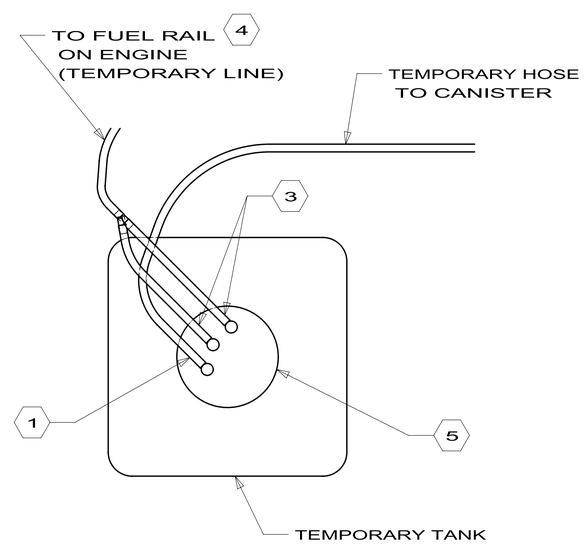

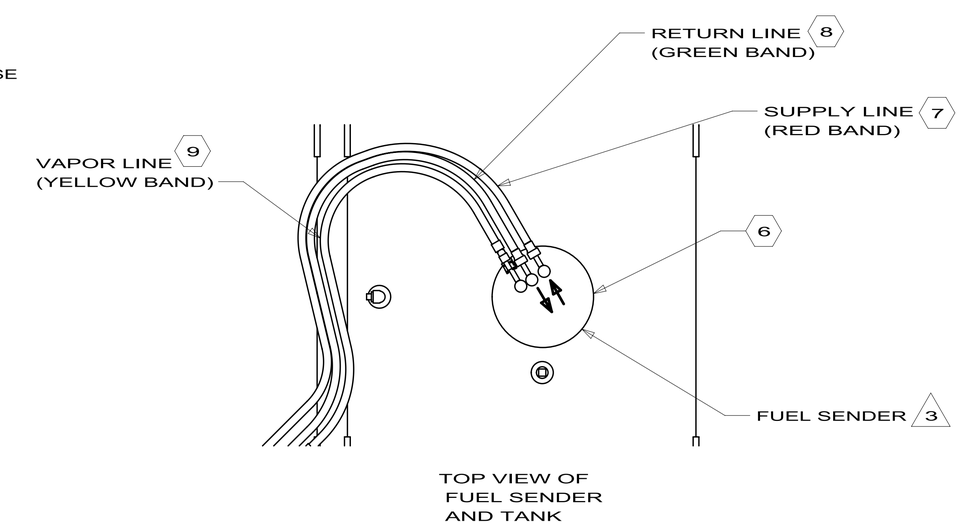

TOP VIEW OF
FUEL SENDER
AND TANK

FIRST USED	04 WH W20/22
DO NOT SCALE DRAWING	
TITLE:	FUEL SYSTEM INSTL-SUPPLY
SHEET 2	PART NO 149048 REV

DWG NO 167442

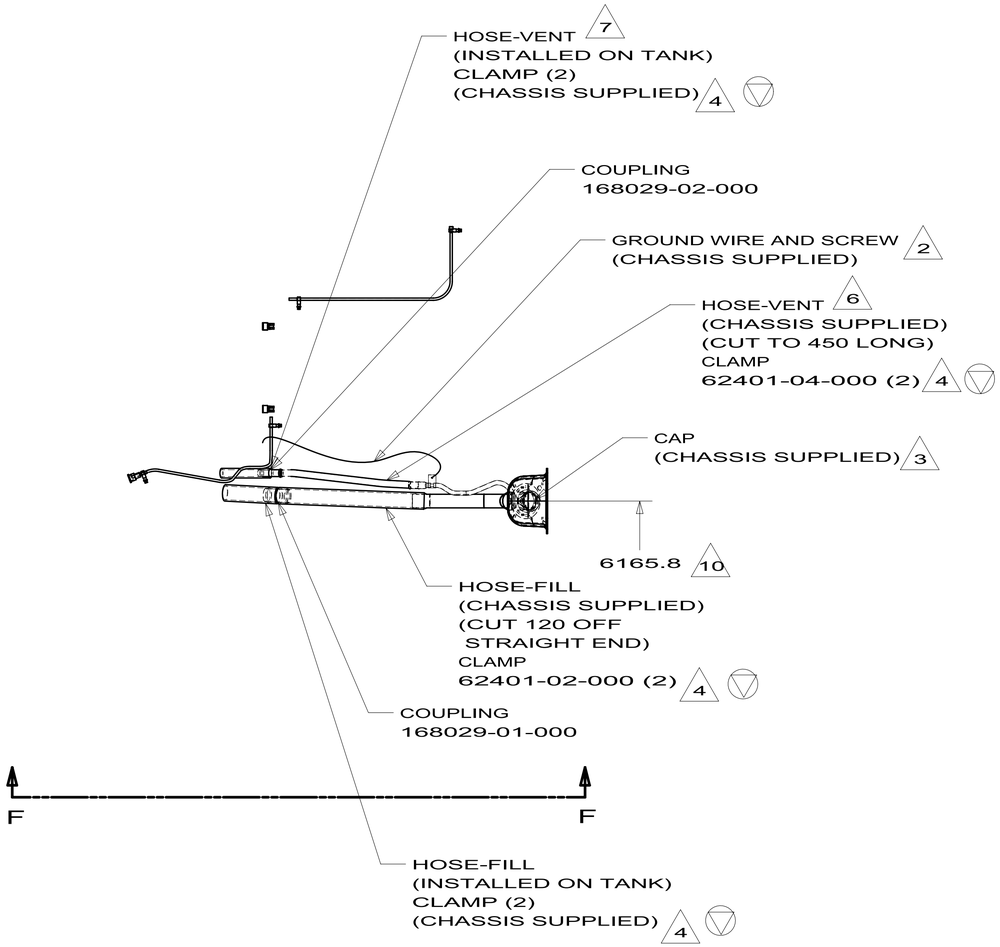

J32H
167442-06

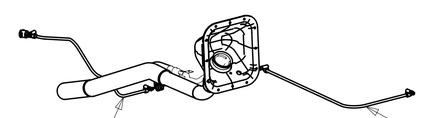

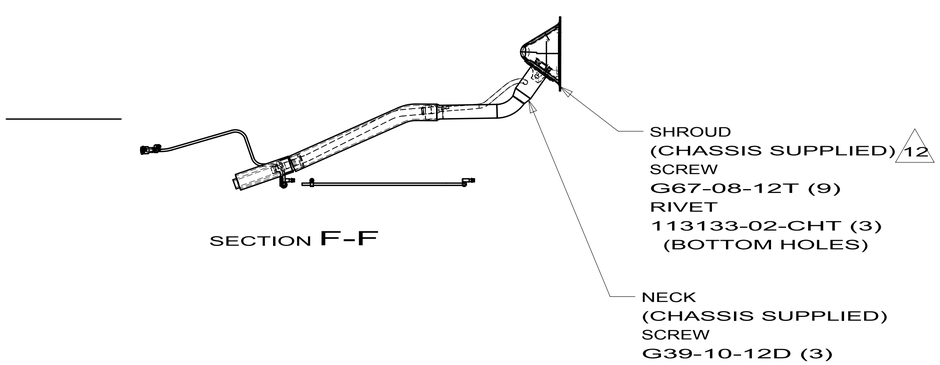

SECTION F-F

J32H/K32H
220" WHEELBASE
(STRETCH 208" TO 220")
LH GENERATOR

FIRST USED	09 FORD MH
DO NOT SCALE DRAWING	
TITLE:	FUEL SYSTEM INSTL-FUEL FILL
SHEET 5	PART NO 167442 REV

10/29/2009

DWG NO 175441

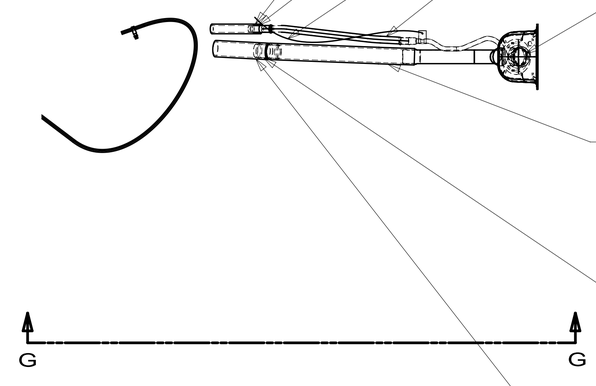

HOSE-FUEL VENT 12
(INSTALLED ON TANK)
CLAMP (2)
(CHASSIS SUPPLIED) 16

COPLING
168029-02-000

GROUND WIRE AND SCREW 2
(CHASSIS SUPPLIED)

HOSE-FUEL VENT 11
(CHASSIS SUPPLIED)
(CUT TO 450 LONG)
CLAMP
062401-04-000 (2) 16

CAP
(CHASSIS SUPPLIED) 6

HOSE-FUEL FILL
(CHASSIS SUPPLIED)
(CUT 120 OFF
STRAIGHT END)
CLAMP
062401-02-000 (2) 16

COPLING
168029-01-000

HOSE-FUEL FILL
(INSTALLED ON TANK)
CLAMP (2)
(CHASSIS SUPPLIED) 16

J32H
175441-07
2011 FORD CHASSIS

GENERATOR FUEL LINE 3
104781-17-000
ANGLE
126624-01-02B (2)
CLAMP
010499-01-000 (2)
SCREW
000G39-10-12B (2)

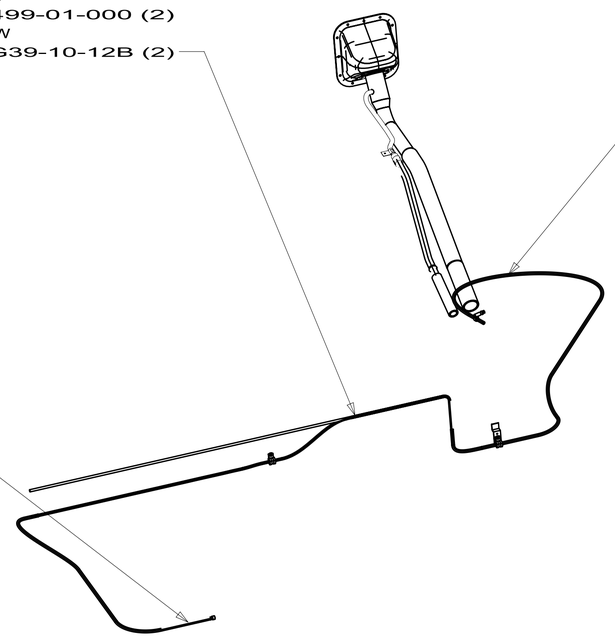

HOSE 4
128139-03-000
(1550)
CLAMP 15
062401-06-000 (2)
FITTING
149468-02-000

HOSE
128139-03-000
(500)
PLUG
084884-01-000
CLAMP 15
062401-06-000 (2)
CLAMP
010499-01-000
SCREW
000G39-10-12B

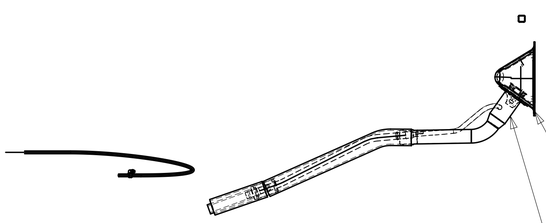

SECTION G-G

SHROUD
(CHASSIS SUPPLIED) 7
SCREW
000G67-08-12T (9)
RIVET
113133-02-CHT (3)
(BOTTOM HOLES)

NECK
(CHASSIS SUPPLIED)
SCREW
000G39-10-12D (3)

J32H
220" WHEELBASE
(STRETCH 208" TO 220")
RH GENERATOR

FIRST USED	11 FD MH
DO NOT SCALE DRAWING	
TITLE:	FUEL SYSTEM INSTL-FUEL FILL
SHEET 8	PART NO 175441 REV

2/25/2010

DWG NO 167443

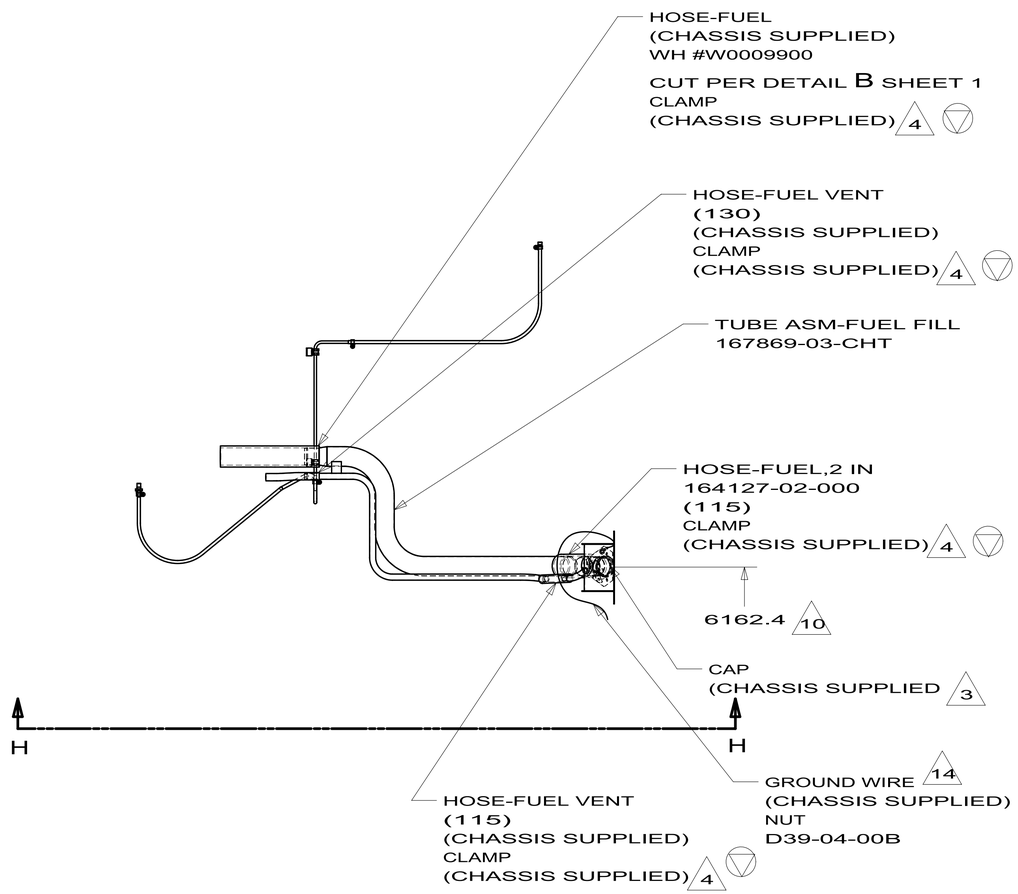

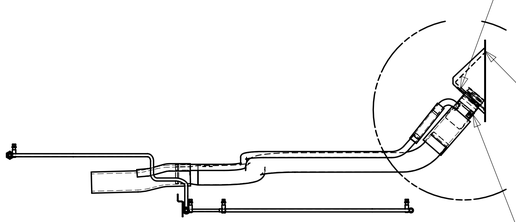

SECTION H-H

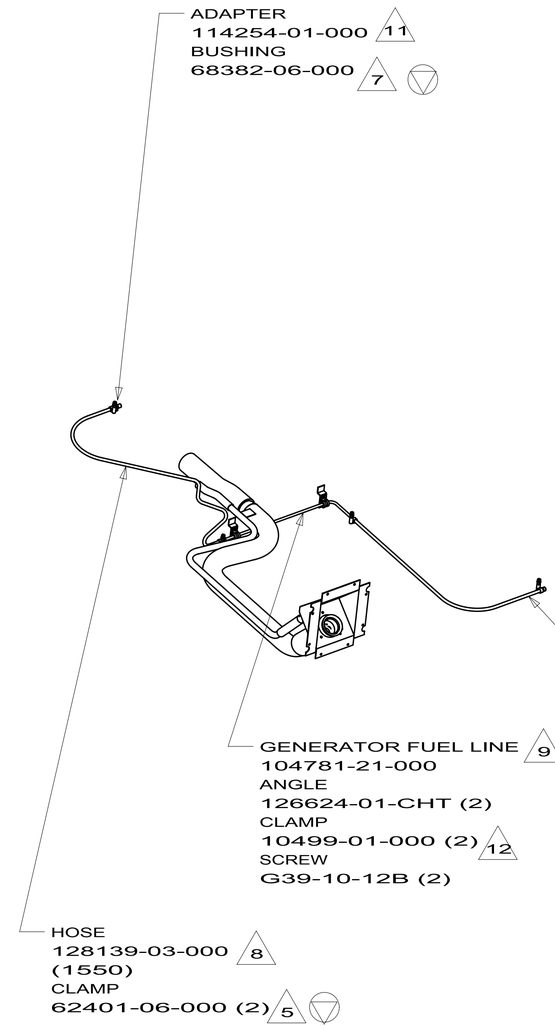

J32H
167443-06

J32H
220" WHEELBASE
(STRETCH 208" TO 220")
LH GENERATOR

FIRST USED	09 WH
DO NOT SCALE DRAWING	
TITLE:	FUEL SYSTEM INSTL-FUEL FILL
SHEET 6	PART NO 167443 REV

10/17/2009

DWG NO 168982

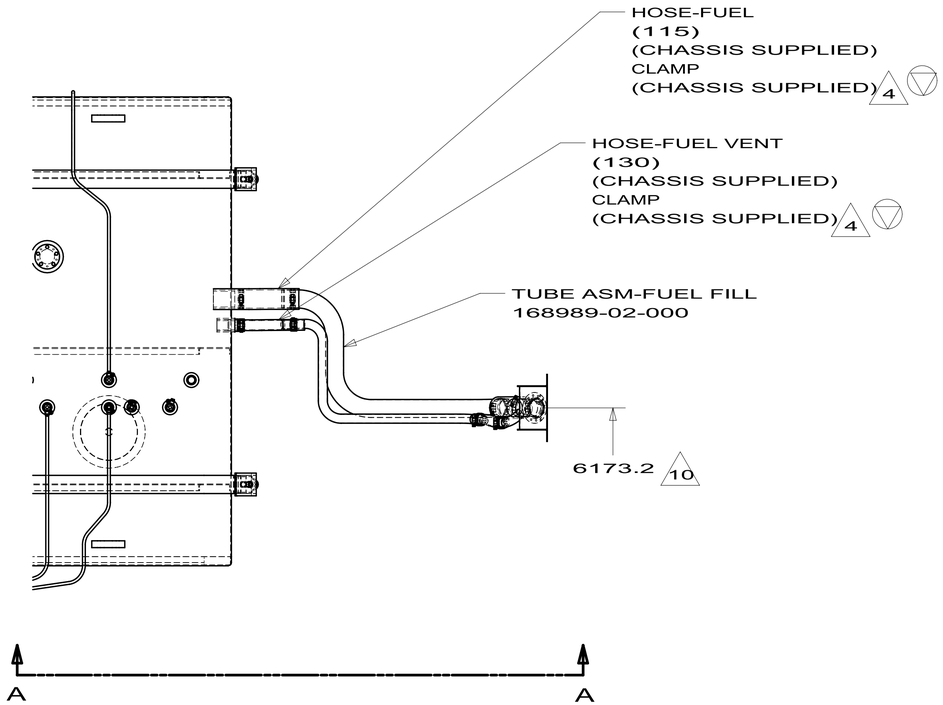

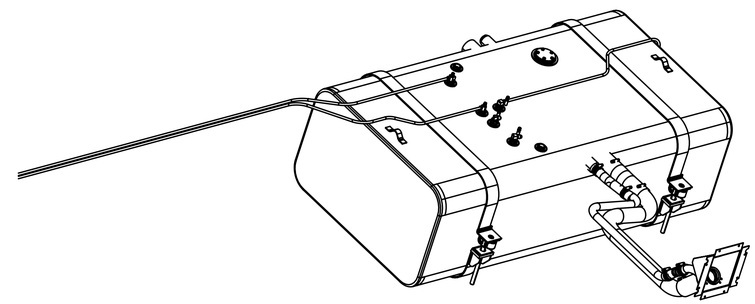

J32H
168982-01

SEE LP SYSTEM INSTL
FOR GENERATOR
FUEL LINES

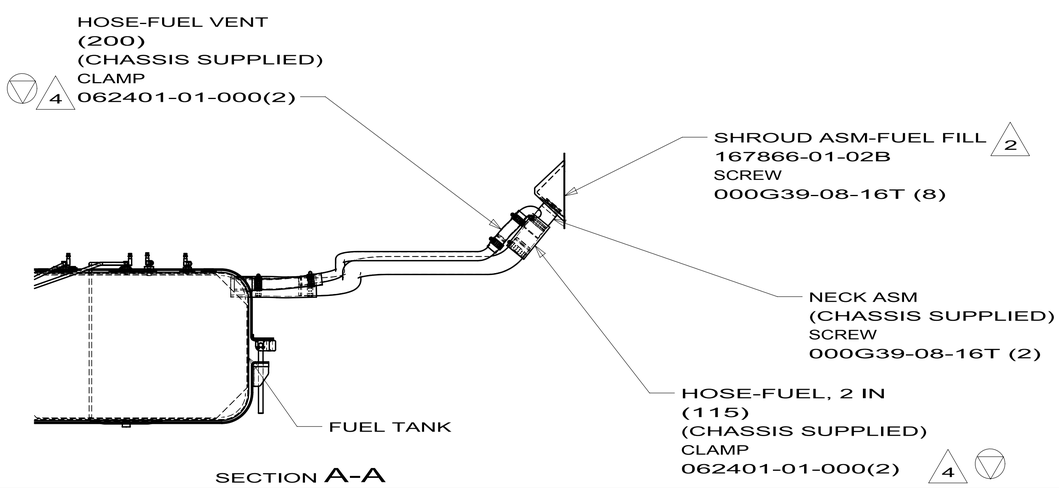

SECTION A-A

J32H
220" WHEELBASE

FIRST USED	10 J-SER,FL
	DO NOT SCALE DRAWING
TITLE:	FUEL SYSTEM INSTL-FUEL FILL
SHEET 1	PART NO 168982 REV

10/23/2009

DWG NO 173521

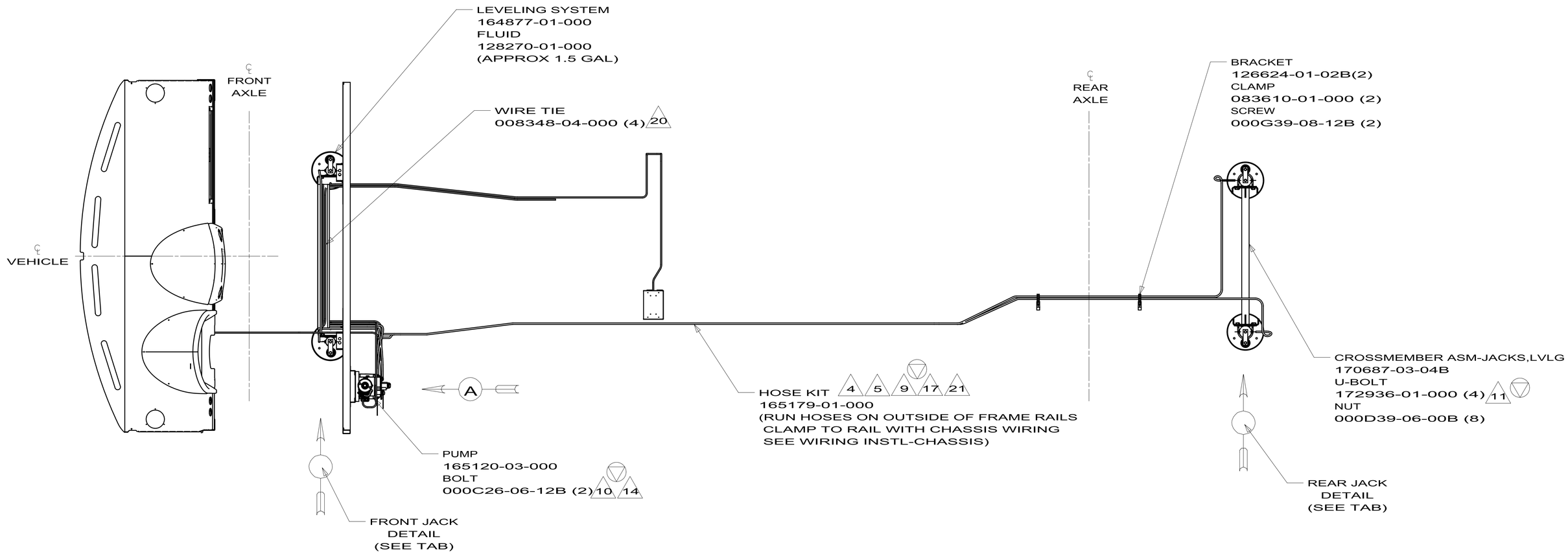

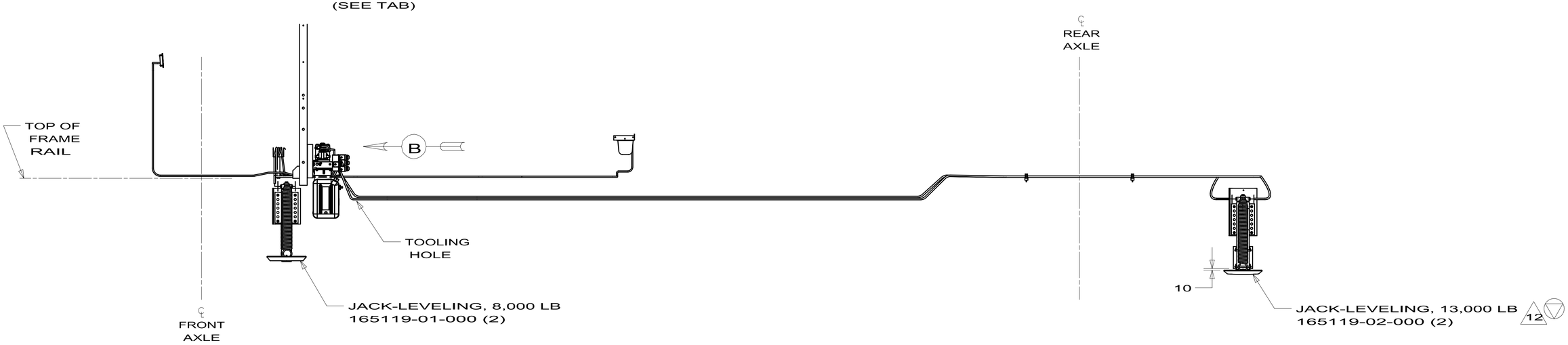

FIRST USED	10 J-SERIES
	DO NOT SCALE DRAWING
TITLE:	LEVELING SYSTEM INSTL-P/G
SHEET 2	PART NO 173521 REV

11/6/2009

DWG NO 173521

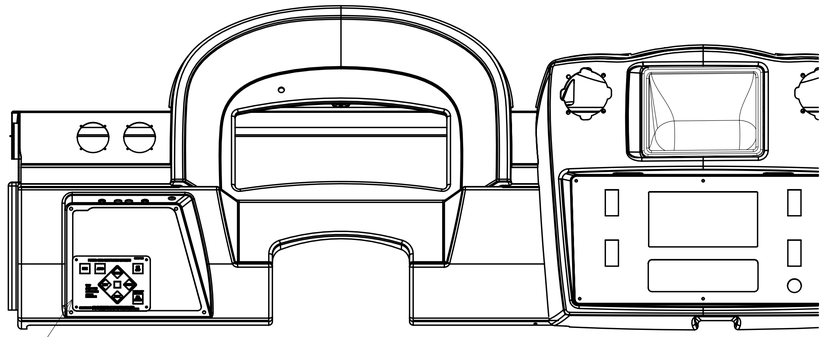

TOUCH PAD-LEVELING SYSTEM 3 15
164881-01-000 SCREW
000G11-08-08T (4)

DETAIL A

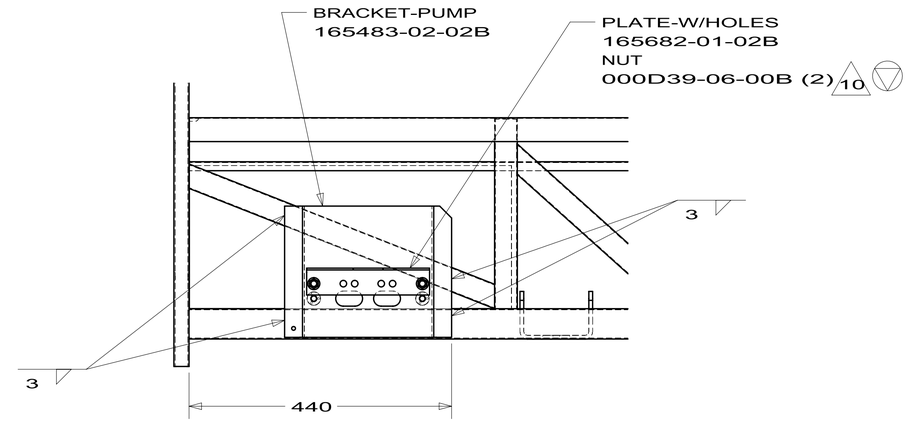

DETAIL B
(PUMP NOT SHOWN)

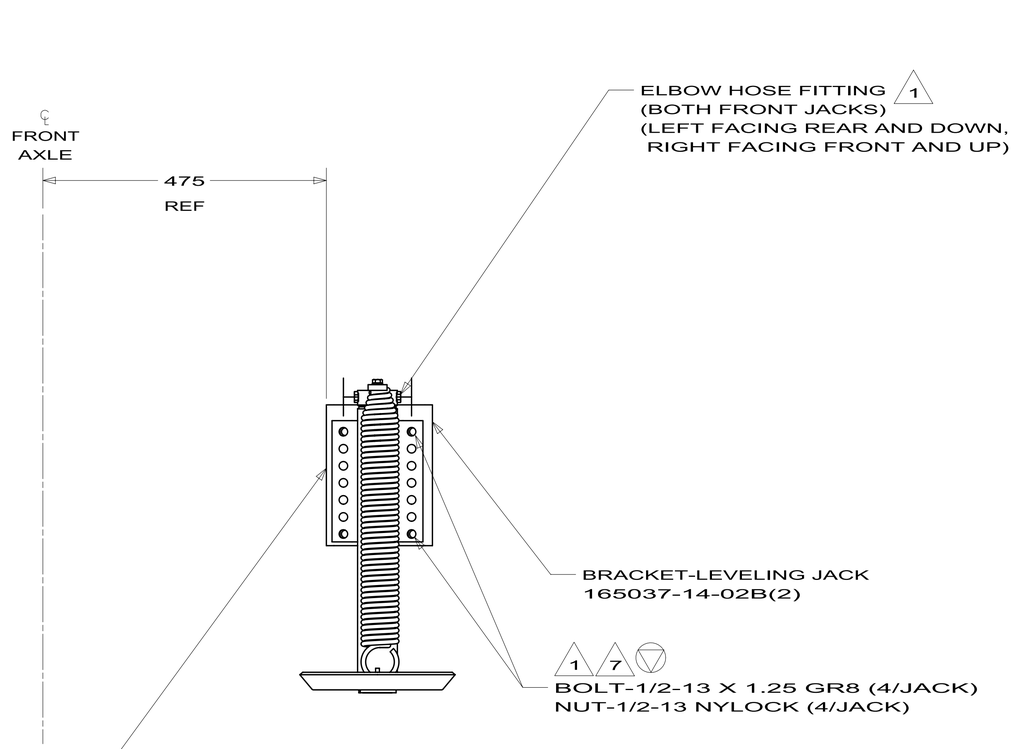

DETAIL C
(WH W22/24)
(22,000/24,000 LB GVWR)
(W/22.5" TIRES)

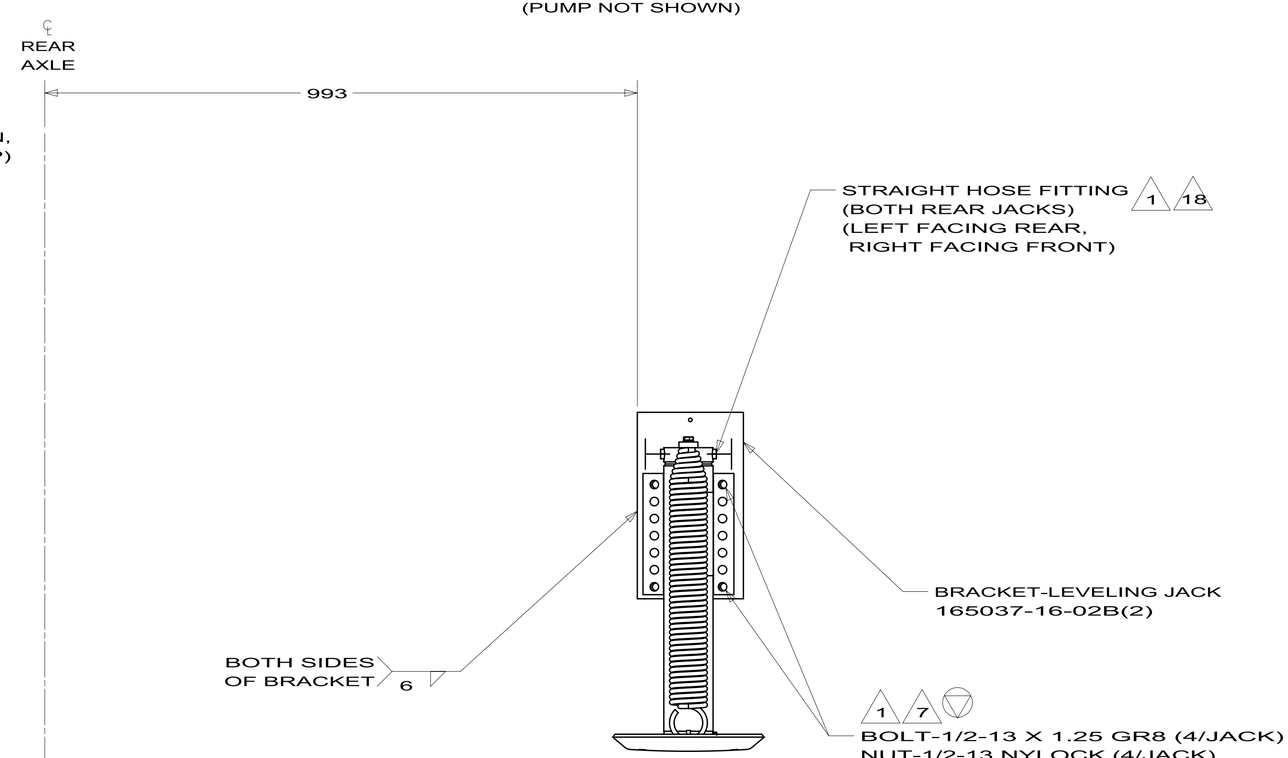

DETAIL D
(WH W22/24)
(22,000/24,000 LB GVWR)
(W/22.5" TIRES)

FIRST USED	10 J-SERIES
DO NOT SCALE DRAWING	
TITLE:	LEVELING SYSTEM INSTL-P/G
SHEET 3	PART NO 173521 REV

11/6/2009

DWG NO 173521

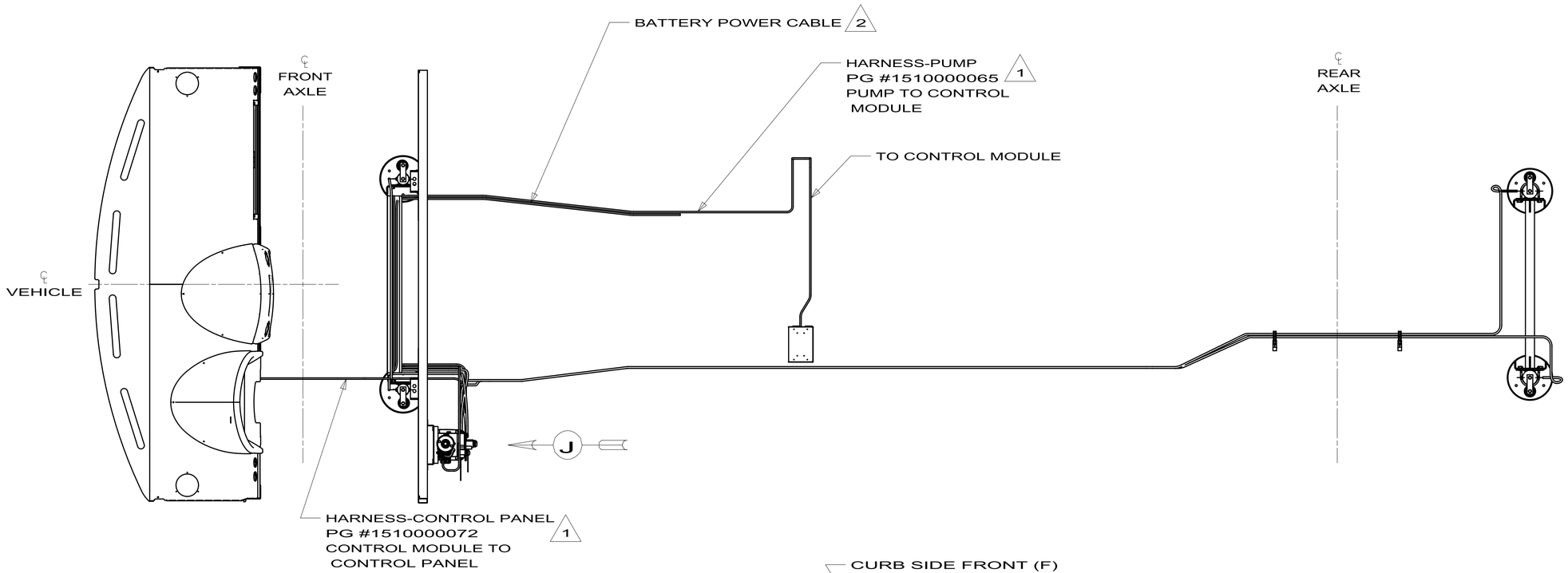

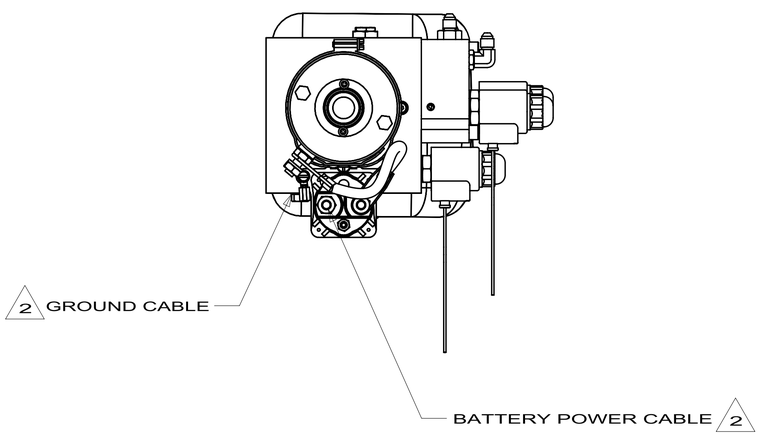

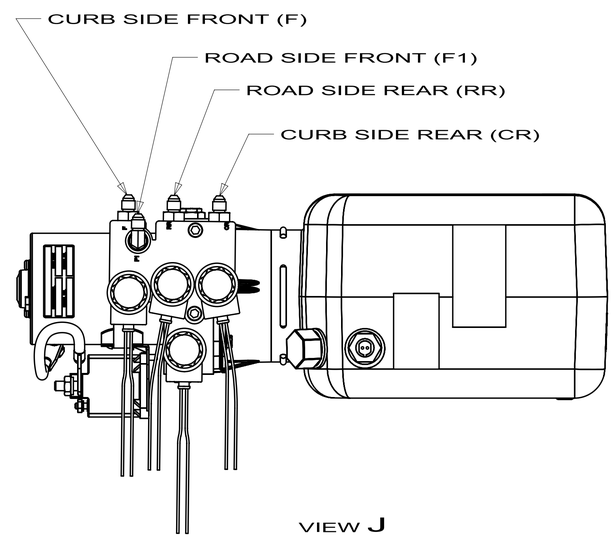

VIEW J

FIRST USED	10 J-SERIES
	DO NOT SCALE DRAWING
TITLE:	LEVELING SYSTEM INSTL-P/G
SHEET 5	PART NO 173521 REV

11/6/2009

DWG NO 173521

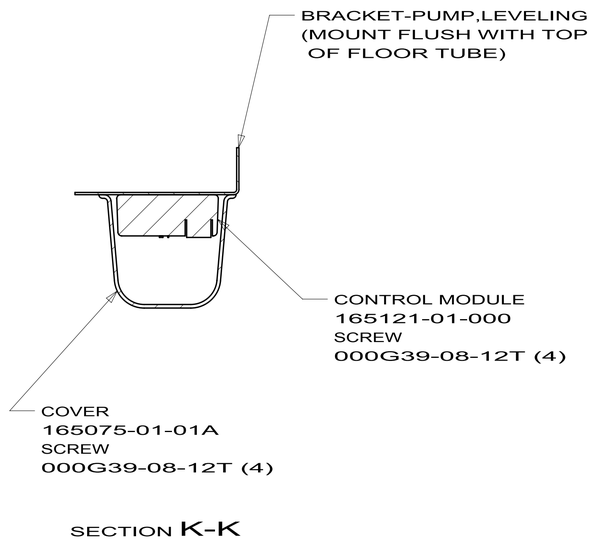

SECTION K-K

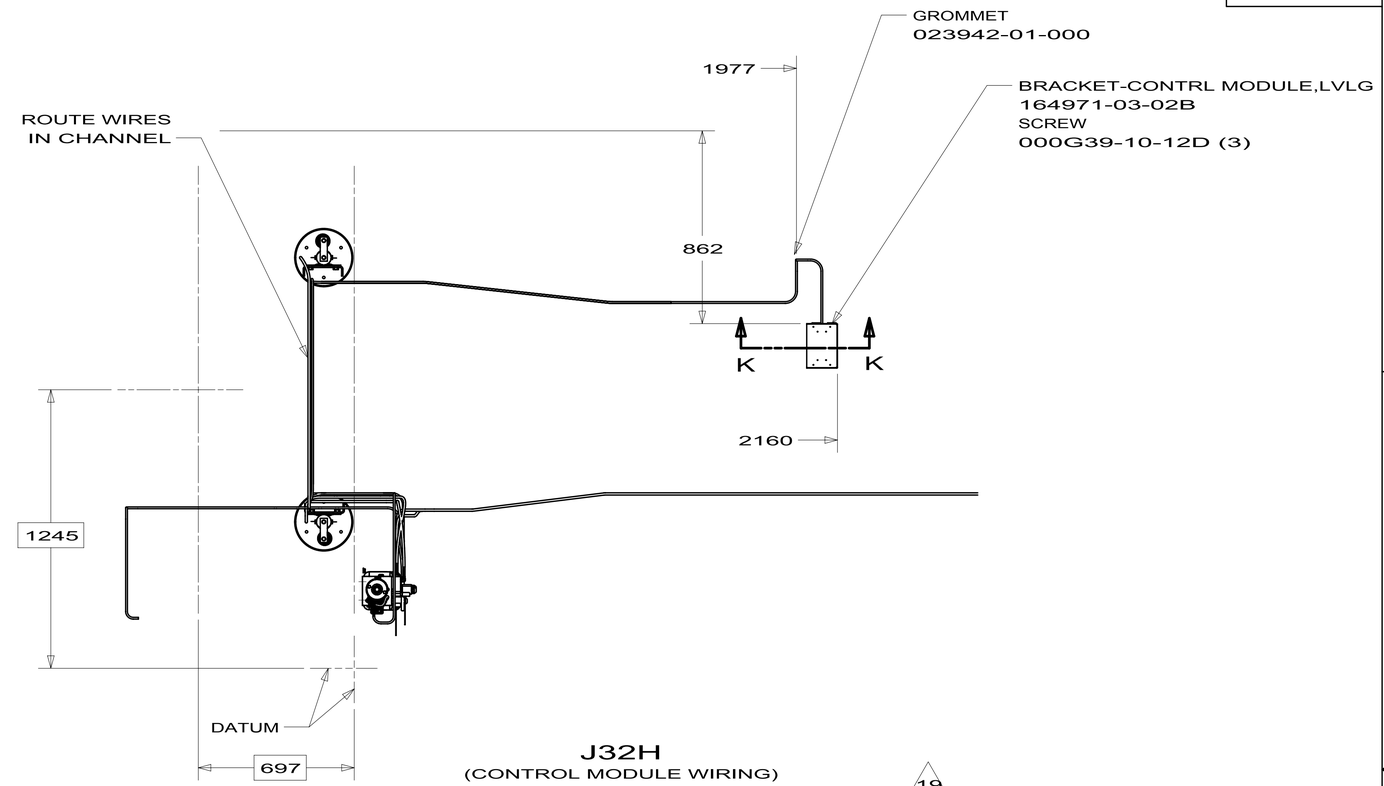

J32H
(CONTROL MODULE WIRING)

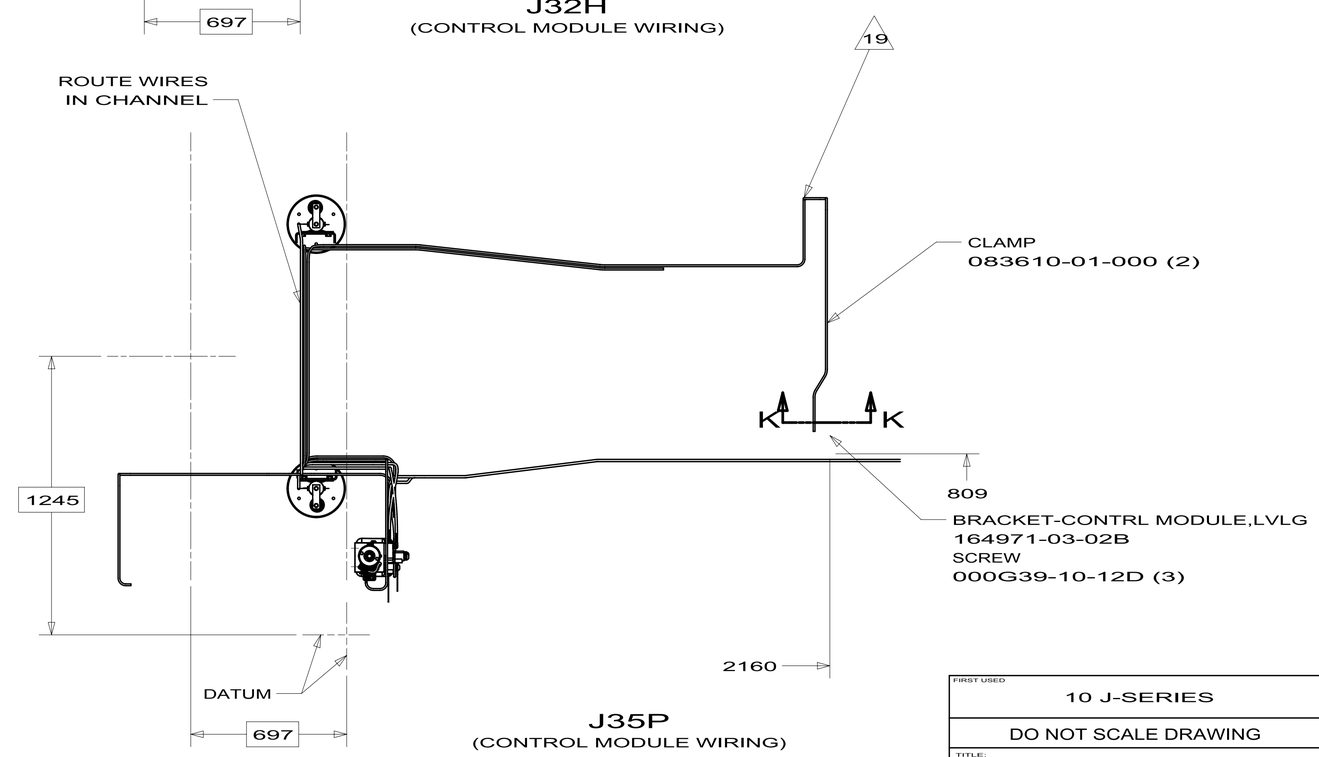

J35P
(CONTROL MODULE WIRING)

FIRST USED	10 J-SERIES
DO NOT SCALE DRAWING	
TITLE:	LEVELING SYSTEM INSTL-P/G
SHEET 6	PART NO 173521 REV

11/6/2009

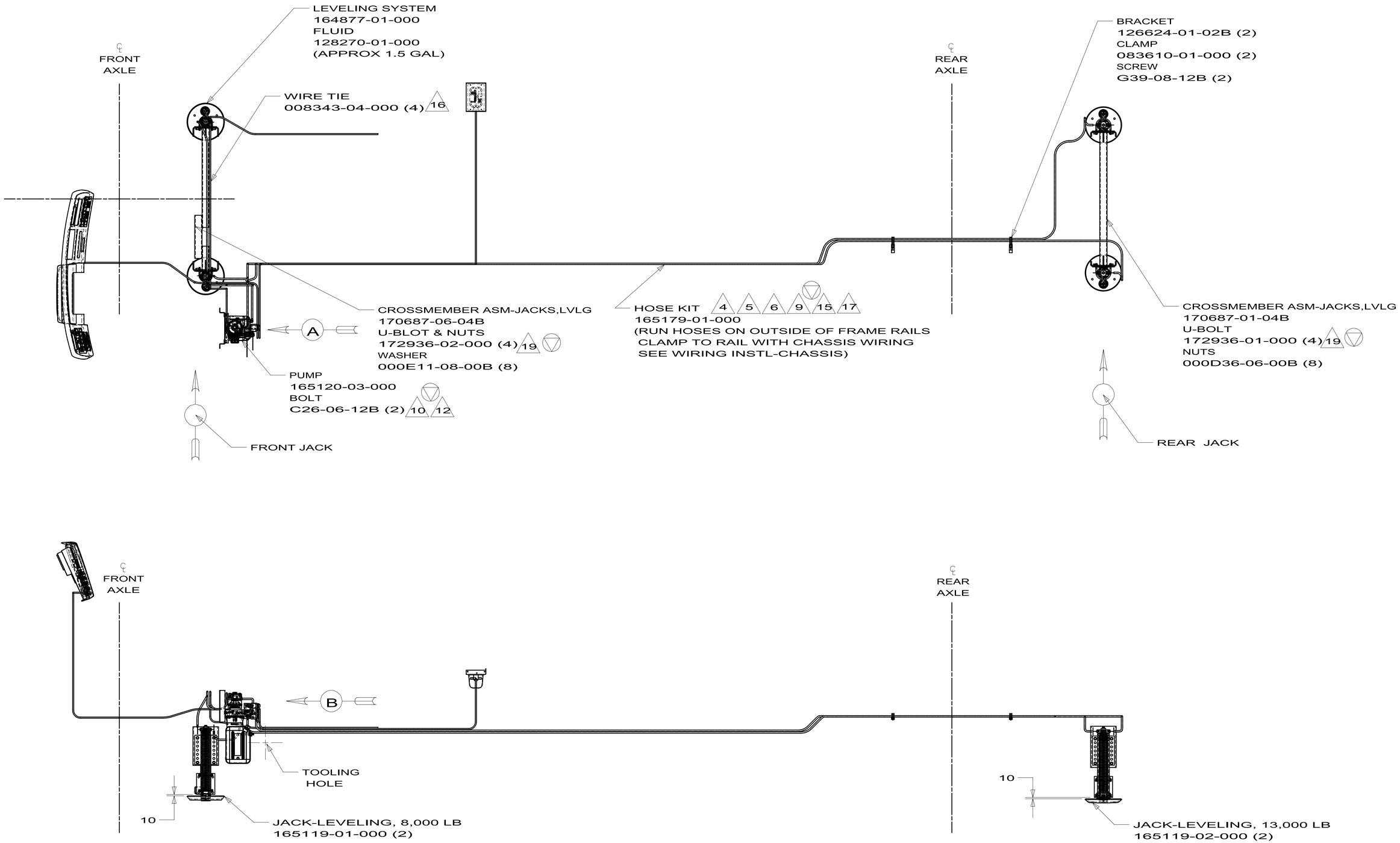

10 J-SER,FL

LEVELING SYSTEM INSTL-P/G

168876

11/6/2009

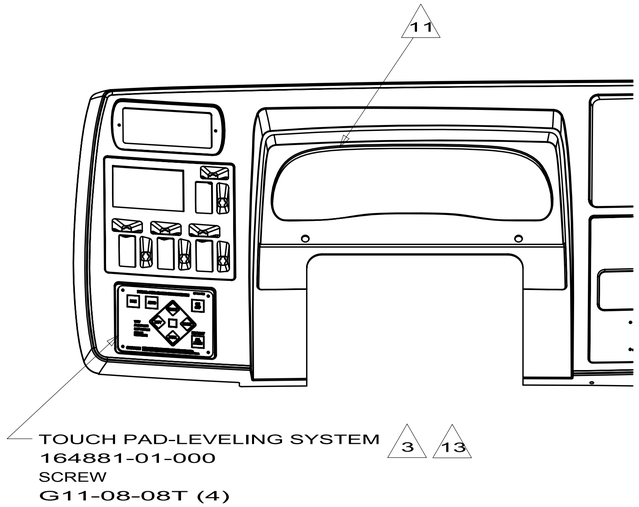

VIEW A

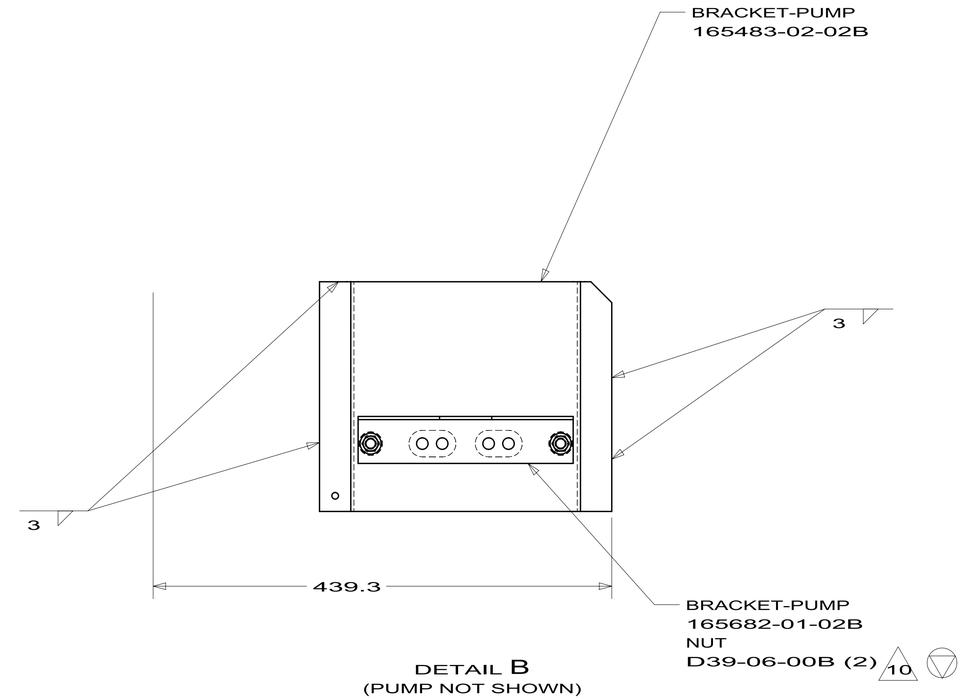

DETAIL B
(PUMP NOT SHOWN)

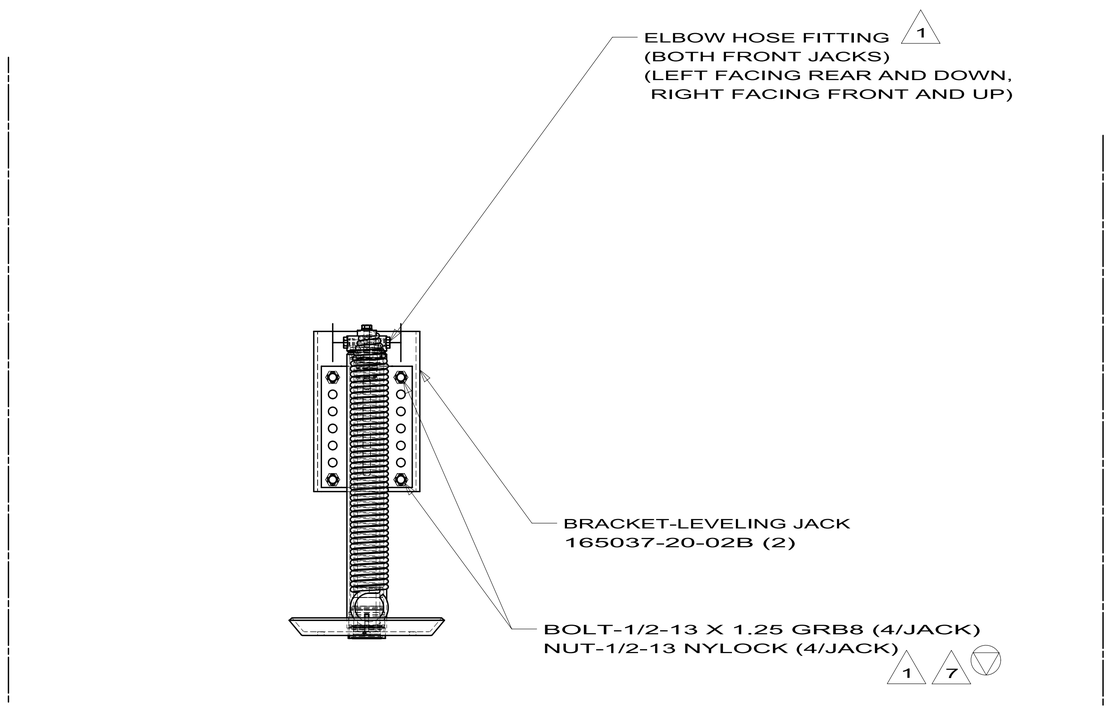

FRONT JACK DETAIL
W/ 22.5 TIRES

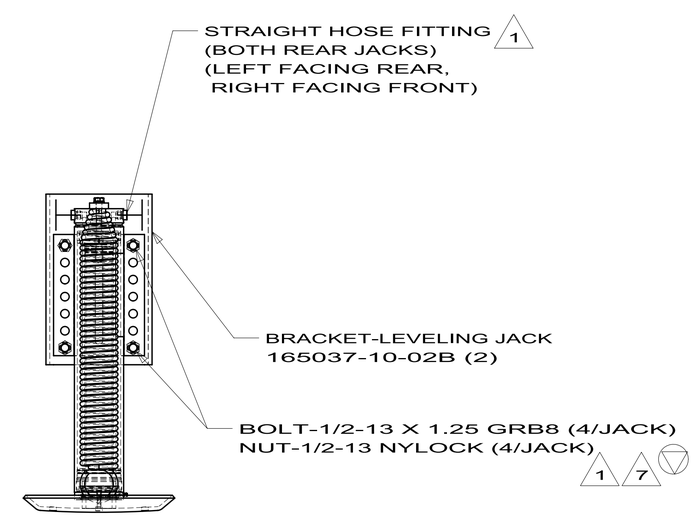

REAR JACK DETAIL
W/ 22.5 TIRES

10 J-SER,FL

LEVELING SYSTEM INSTL-P/G

168876

11/6/2009

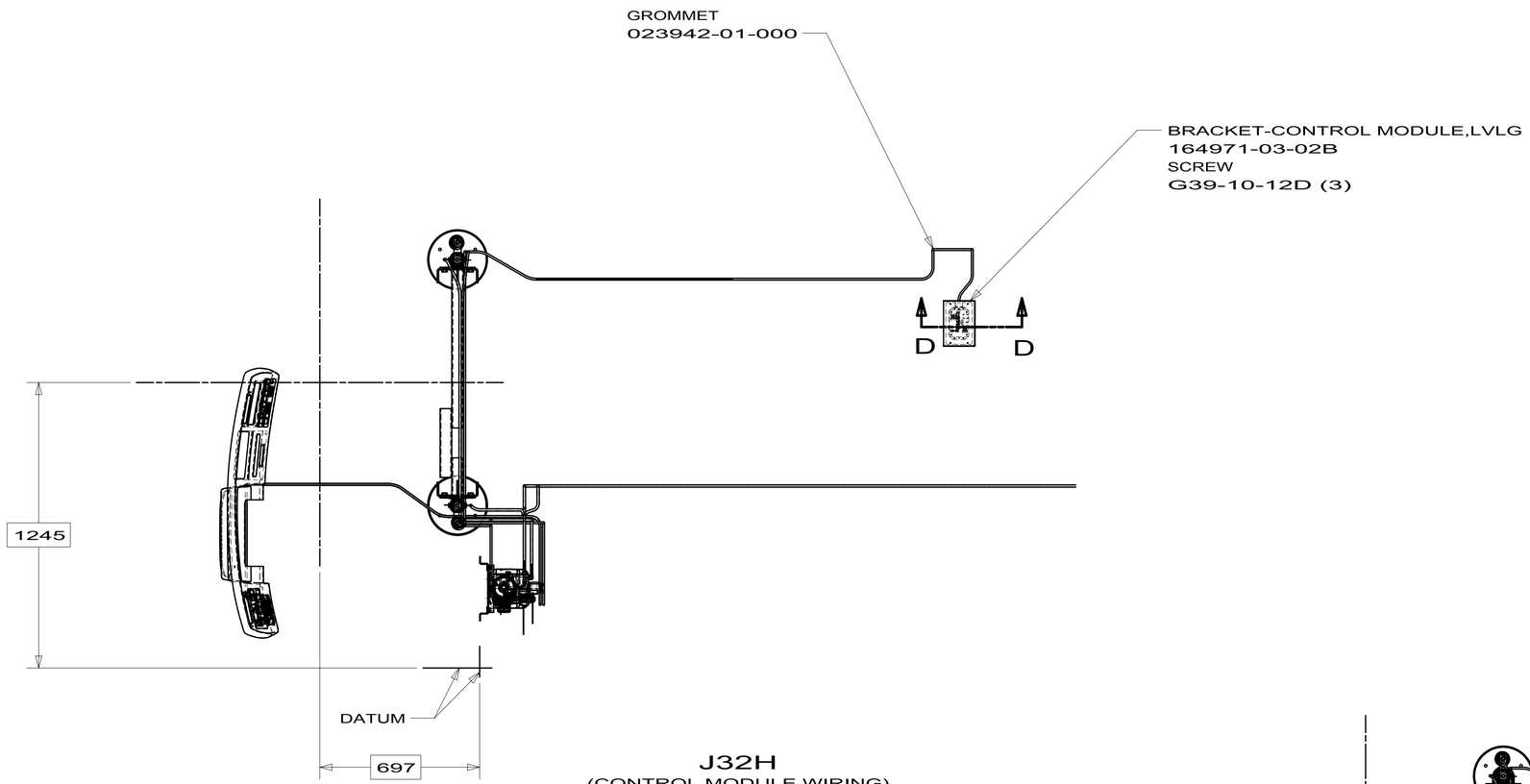

J32H
(CONTROL MODULE WIRING)

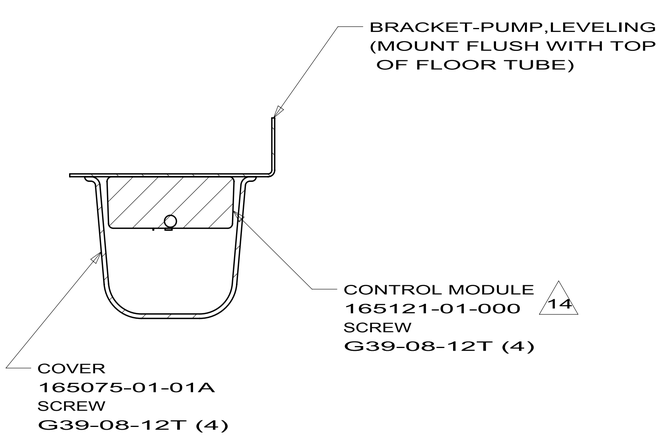

SECTION D-D

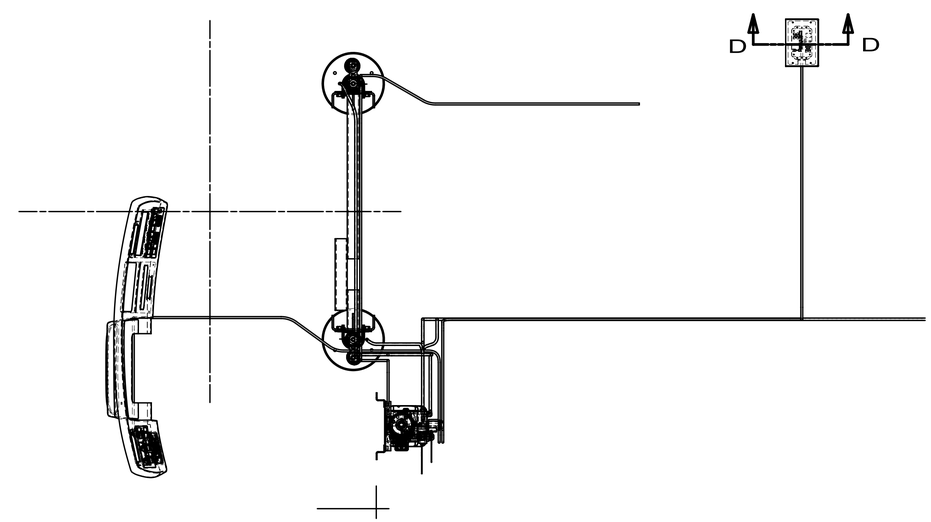

10 J-SER,FL

LEVELING SYSTEM INSTL-P/G

168876

11/6/2009

164877-01-000

KEY	PART NUMBER	U/M	DESCRIPTION	VENDOR NO.
	164877-01-700	EA	PUMP HARNESS - 252"	1510000065
	164877-01-701	EA	INTERCONNECT HARNESS - 30"	1510000072
	164877-01-702	EA	SOLENOID	09-1141

164877-02-000

KEY	PART NUMBER	U/M	DESCRIPTION	VENDOR NO.
	164877-01-700	EA	PUMP HARNESS - 252"	1510000065
	164877-02-700	EA	INTERCONNECT HARNESS - 21'	1510000073

COPYRIGHT © 2009 WINNEBAGO INDUSTRIES INC.

165119-01-000

KEY	PART NUMBER	U/M	DESCRIPTION	VENDOR NO.
	165119-01-700	EA	SPRING KIT - 2.5" X 17"	500094
	165119-01-701	EA	CONE/THREADED - F/SPRING	500085
	165119-01-702	EA	REBUILD KIT (SEALS)	800138S

165119-02-000

KEY	PART NUMBER	U/M	DESCRIPTION	VENDOR NO.
	165119-01-700	EA	SPRING KIT - 2.5" X 17"	500094
	165119-01-701	EA	CONE/THREADED - F/SPRING	500085
	165119-02-700	EA	REBUILD KIT (SEALS)	800199S

COPYRIGHT © 2009 WINNEBAGO INDUSTRIES INC.

165179-01-000

KEY	PART NUMBER	U/M	DESCRIPTION	VENDOR NO.
	165179-01-700	EA	HOSE - 288" - ROADSIDE REAR	080-AA288WSTRR
	165179-01-701	EA	HOSE - 288" - CURBSIDE REAR	080-AA228WSTCR
	165179-01-702	EA	HOSE - 88" - CURBSIDE FRONT	080-AA088WSTCF
	165179-01-703	EA	HOSE - 32" - ROADSIDE FRONT	080-AA032WSTRF

165179-02-000

KEY	PART NUMBER	U/M	DESCRIPTION	VENDOR NO.
	165179-02-700	EA	HOSE - 432" - ROADSIDE REAR	080-AA432WSTRR
	165179-02-701	EA	HOSE - 384" - CURBSIDE REAR	080-AA432WSTCR
	165179-02-702	EA	HOSE - 168" - ROADSIDE FRONT	080-AA168WSTRF
	165179-02-703	EA	HOSE - 120" - CURBSIDE FRONT	A080-AA120WSTCF

COPYRIGHT © 2009 WINNEBAGO INDUSTRIES INC.

DWG NO 159483

2010 AND UP WHEEL TRIM MATRIX

	TIRE AND WHEELS		WHEELCOVERS		WHEEL LINERS				CHASSIS-SUPPLIED PARTS IF ORDERED W/ALUMINUM WHEEL				
	TIRE/WHEEL ∅ & WIDTH	WHEEL P/N & MFGR	WHEEL COVERS	VALVE EXTENSION	WHEEL LINERS	VALVE EXTENSION	STABILIZER	TORQ. WHEEL LINER	ALUMINUM WHEEL	HUB COVER	VALVE EXTENSION	STABILIZER	NUT COVER
CHEVY C BODY (14050) NOT USED	225/75R 16"X6.5"	ACCURIDE 29361 AFTERMARKET ACCURIDE 29588	109443-05	REAR:(4)77030-01 REMOVE COVER FOR ACCESS FRONT: (2)77030-01	110435-23-000	REAR INNER (2)95012-09 △6 REAR OUTER (2)77030-10 FRONT (2)77030-10	(2)95012-07	PUSH ON (NA)	156797 -01 (2) FRONT -02 (2) REAR	156797 -03 (2) FRONT -04 (2) REAR	REAR INNER (2)77030-01	-	REPLACE NUTS W/ (32) 156797-06 NUT COVERS (32) 149749-05
DODGE SPRINTER 2500 BVAN 100 SERIES	245/75R 16"X6.5" (1KD)	ALUM DODGE 68004980AA STL(SPARE) DODGE 1J97SZ0AA	N/A	N/A	N/A	N/A	N/A	N/A	DODGE 68004980AA	DODGE 51045708AA (CENTER CAP)	N/A	N/A	BOLT/DODGE 68013444AA
SPRINTER 6 BOLT 16" (DUAL) 50O/H SERIES	215/85R 16"X5.5" (1KB) (1KM)	MAGNETTO MERCEDES A 001 401 71 02	N/A	N/A	154970-02	CHASSIS SUPPLIED REAR	-	PUSH ON (NA)	168919 -01 SET FRONT -02 SET REAR	168919 -03 SET FRONT -04 SET REAR	---	---	PART OF HUB COVER SET(S)
FORD A BODY F53 10 BOLT 19.5" E/D SERIES	245/70R 19.5"X6.75" (16H) (16K)	ACCURIDE 29875	N/A	N/A	154672-01	REAR INNER (2)95012-09 △6 REAR OUTER (2)77030-10 FRONT CAP ONLY	(2)95012-07	41-47 NM 30-35 LB/FT TORQUE	N/A	-	-	-	
FORD A BODY F53 D/J SERIES	235/80R 22.5"X7.5" (16L) (16Z)	ALCOA DURA-BRITE 873400	N/A	-	-	-	-	-	- △1	KIT WITH ATTACHMENT 150723-01 △5	REAR INNER (2)77030-10 △5	-	-
FREIGHT LINER (REAR ENGINE) P/R SERIES (1AF) (1LE)	255/80R 22.5"X8.25" 295/80R 22.5"X8.25" (1LT) (1LU)	ACCURIDE 50487	N/A	N/A	-	REAR INNER (2)77030-11 REAR OUTER (2)77030-10 FRONT (2)77030-01	(2)77030-11	41-47 NM 30-35 LB/FT TORQUE	(2)133429-03 (2)133429-04 ACCURIDE 29697 IFS ONLY FRONT ACCURIDE 29560	FRONT FCCC (2)A22-53422-000 129058-15(2) 129058-16/19 129058-17/20 OR 129058-21/22 △2	REAR △1 INSIDE 129058-06 (2)	129058-18 (2) △1	(40)129058-10
FORD C BODY E350/450 200/300/700 SERIES	225/75R 16"X6" (16C) (16Y)	(ARVIN MERRITOR) FORD 8C24-1015-H	109443 -05-000	REAR: FORD 1/2" FRONT: FORD 1/2" (LIKE 077030-10) REMOVE COVER FOR REAR ACCESS	110435-23-000	REAR INNER (2)95012-05 △6 REAR OUTER AND FRONT CHASSIS SUPPLIED 1/2"(77030-10)	(2)95012-07	PUSH ON (NA)	(2)149749-01 (2)149749-02 (UP TO 06-22-09) (2)149749-07 (2)149749-08 (AFTER 06-23-09)	156797 -03(2)FRONT -04(2)REAR	REAR INNER (2)77030-01	---	REPLACE NUTS W/ (32) 149749-06 NUT COVERS (32) 149749-05
FORD A BODY F53 16K 2009 E26P	225/70R 19.5"X6.0" (16N)	(HAYES LAMMERZ) FORD 8U94-1015-BA	N/A	N/A	154672-02	REAR INNER (2)95012-09 △6 REAR OUTER (2)77030-10 FRONT CAP ONLY	(2)95012-07	41-47NM 30-35 LB/FT	N/A	---	---	---	---
FRONT ENGINE FREIGHT LINER J SERIES	225/80R 22.5"X8.25" (1L1) (1LL)	ACCURIDE 50487	N/A	N/A	145580-05	REAR INNER (2)77030-11 REAR OUTER (2)77030-10 FRONT (2) 77030-01	(2)77030-11	41-47NM 30-35 LB/FT TORQUE	(2)133429-03 (2)133429-04 ACCURIDE 29697	FRONT FCCC(2) A22-53422-000 129058-15(2) 129058-17/20	REAR △1 INSIDE 129058-06 (2)	129058-18 (2) △1	(40)129058-10

5 △ WINNEBAGO INSTALLED.

4 △ FREIGHTLINER LOGO NOT FOR WORKHORSE APPLICATION.

3 △ NO WINNEBAGO 8 BOLT HUB COVER WITHOUT PORT.

2 △ BRACKET-17/20 FOR 145 AXLE, BRACKET-21/22 FOR 144 AXLE.

1 △ CHASSIS SUPPLIED

SOME PARTS UNIQUE TO CHASSIS MFGR., NO WINNEBAGO P/N

6 △ USE NUT SUPPLIED ON EXTENSION BETWEEN STABILIZER AND CAP.

CONTINUED ON NEXT PAGE

FIRST USED: 07 MOTORHOMES

DO NOT SCALE DRAWING

TITLE: WHEEL INSTL

SHEET 1 | PART NO 159483 | REV

2/17/2010

DWG NO 159483

2010 WHEEL TRIM MATRIX CONTINUED

	TIRE AND WHEELS		WHEELS AND COVERS		WHEEL LINERS				CHASSIS-SUPPLIED PARTS IF ORDERED W/ALUMINUM WHEEL				
	TIRE/WHEEL ∅ & WIDTH	WHEEL P/N & MFGR	WHEEL COVERS	VALVE EXTENSION	WHEEL LINERS	VALVE EXTENSION	STABILIZER	TORQ. WHEEL LINER	ALUMINUM WHEEL	HUB COVER	VALVE EXTENSION	STABILIZER	NUT COVER
WORKHORSE W16/18 E26P/E30W	225/70R 19.5"X6" 1PJ 1PL	MAXION W0007492	N/A	-	145580-06	REAR INNER CHASSIS SUPPLIED	N/A	41-47 NM 30-35 LB/FT TORQUE	N/A	-	-	-	-
WORKHORSE W20/22 E/D SERIES	245/70R 19.5"X6.75" 1PE 1PR	MAXION W0002404	N/A	-	134609-02 145580-03	REAR INNER (2)95012-09 6 REAR OUTER (2)77030-10 FRONT (2)77030-10	(2)95012-07	41-47 NM 30-35 LB/FT TORQUE	(2)118815-02 (2)118815-03 ALCOA 764481 764482	(2)129058-15 (2)129058-17	95012-09 (2)	129058-07 (2)	(32)129058
WORKHORSE W20/22/24 D/J SERIES	225/70R 22.5"X6.75" 1PS 1PU 1PV	MAXION W0002404	N/A	-	134609-05 145580-02	REAR INNER (2)95012-10 6 REAR OUTER (2)77030-01 FRONT (2)77030-10	(2)95012-07	41-47 NM 30-35 LB/FT TORQUE	(2)128689-01 (2)128689-02 ALCOA 873401	(2)129058-15 (2)129058-17 SIMILAR TO -14 (2) 3 -16 (2) 4	FLEX HOSE 1	129058-07 (2)	(32)129058
-	-	-	-	-	-	-	-	-	-				

FIRST USED	07 MOTORHOMES
	DO NOT SCALE DRAWING
TITLE:	WHEEL INSTL
SHEET 2	PART NO. 159483 REV

2/17/2010

DWG NO 159483

*FOR WINNEBAGO MODEL YEAR 2007, WINNEBAGO WILL SUPPLY LUG WRENCHES WHICH ARE SUPPLIED TO WINNEBAGO WITH THE CHASSIS. (CURRENTLY, FORD E350/E450 CUTAWAY, DODGE SPRINTER, AND FORD F53 19.5" RAIL) IN ADDITION, C-BODY CUTAWAY CHASSIS WITH ALUMINUM WHEEL OPTION, FORD CHASSIS SUPPLIED LUG WRENCH WHICH NO LONGER FITS ALUMINUM WHEEL FASTENERS WILL BE STORED UNDER PART NUMBER 112358-02-000. WINNEBAGO WILL PROVIDE LUG WRENCH AND LEVERAGE BAR TO FIT ALUMINUM WHEEL HARDWARE. WINNEBAGO WILL PROVIDE 112358-02-000 WITH STANDARD CHEVY STEEL WHEEL CHASSIS.

OTHER APPLICATIONS LISTED FOR WRENCH FIT REFERENCE

2007 AND UP

LUG WRENCH APPLICATION MATRIX

	CHASSIS	LUG WRENCH	LEVERAGE BAR	TORQUE FT/LBS
* NOT USED	CHEVY CUTAWAY G3500 8 BOLT GMT610 8 BOLT	112358-02	---	110-140
* NOT USED	CHEVY CUTAWAY ALUMINUM WHEELS G3500/GMT610 8 BOLT	80208-06	80208-02	140
* 100/500/H SERIES 1KB 1KD 1KM	DODGE SPRINTER 16" 6-BOLT	CHASSIS SUPPLIED (FLOOR COMPT. @ PASS. FEET)	CHASSIS SUPPLIED	140 (130-150)
* 200/300/700 SERIES 16C 16Y	FORD CUTAWAY E350SD/E450SD 8 BOLT	CHASSIS SUPPLIED 112358-02	---	140
* 200/300/700 SERIES 16C 16Y	FORD CUTAWAY ALUMINUM WHEELS E350SD/E450SD 8 BOLT	80208-06	80208-02	140
* E/D SERIES 16H 16K	FORD RAIL F53 10 BOLT 19.5"	CHASSIS SUPPLIED 112358-01	---	140
D/J SERIES 16L 16Z	FORD RAIL F53 8 BOLT 22.5" ALUMINUM	80208-04	80208-05	450-500
	FREIGHTLINER 10 BOLT NOT USED	80208-04	80208-05	450-500
E26P/E30W 1PJ 1PL	WORKHORSE W16/18 10 BOLT 19.5"	80208-06	80208-02	150 (145-155)
E/D/J SERIES 1PE 1PR 1PS 1PU 1PV	WORKHORSE W20-25 SERIES AND UFO 8 BOLT	80208-04	80208-05	450-500

FIRST USED: 07 MOTORHOMES

DO NOT SCALE DRAWING

TITLE: WHEEL INSTL

SHEET 3 | PART NO. 159483 | REV

2/17/2010

145580-03-000

KEY	PART NUMBER	U/M	DESCRIPTION	VENDOR NO.
	110435-04-705	EA	DECAL-CTR HUB 2 3/4" DIAMOND	2 3/4 DECAL DIAMOND
	110435-05-700	EA	CAP-CENTER 4.50"D W/O DECAL	V22510-POC
	110435-12-700	EA	LINER - WHEEL - FRONT	V19580-FWC
	110435-12-701	EA	LINER - WHEEL - REAR	V19580-RWC
	145580-01-702	EA	COVER-LUG NUT/JAM NUT 22M	V19582-EJN
	145580-01-703	EA	TOOL-INSTALLATION	V22501-TOL

145580-05-000

KEY	PART NUMBER	U/M	DESCRIPTION	VENDOR NO.
	110435-04-705	EA	DECAL-CTR HUB 2 3/4" DIAMOND	2 3/4 DECAL DIAMOND
	110435-05-700	EA	CAP-CENTER 4.50"D W/O DECAL	V22510-POC
	145580-01-702	EA	COVER-LUG NUT/JAM NUT 22M	V19582-EJN
	145580-01-703	EA	TOOL-INSTALLATION	V22501-TOL
	145580-05-700	EA	LINER - WHEEL/FRONT - 1EA=1	V22587-FWC
	145580-05-701	EA	LINER - WHEEL/REAR - 1EA=1	V22587-RWC

145580-06-000

KEY	PART NUMBER	U/M	DESCRIPTION	VENDOR NO.
	110435-04-705	EA	DECAL-CTR HUB 2 3/4" DIAMOND	2 3/4 DECAL DIAMOND
	110435-10-702	EA	JAMB NUT W/JAMB NUT COVER	V195P7-EJN
	110435-10-705	EA	TOOL/JAMB NUT INSTALLATION	V195P7-TOL
	145580-06-700	EA	LINER - WHEEL/FRONT - 1EA=1	V195W18-FWC
	145580-06-701	EA	LINER - WHEEL/REAR - 1EA=1	V195W18-RWC

COPYRIGHT © 2009 WINNEBAGO INDUSTRIES INC.

150723-01-000

KEY	PART NUMBER	U/M	DESCRIPTION	VENDOR NO.
	110435-04-705	EA	DECAL-CTR HUB 2 3/4" DIAMOND	2 3/4 DECAL DIAMOND
	110435-05-700	EA	CAP-CENTER 4.50"D W/O DECAL	V22510-POC
	145580-01-702	EA	COVER-LUG NUT/JAM NUT 22M	V19582-EJN
	145580-01-703	EA	TOOL-INSTALLATION	V22501-TOL
	150723-01-700	EA	COVER - HUB/FRONT W/CAP	VAC8275-FHC
	150723-01-701	EA	COVER - HUB/REAR	VAC8275-RHC

COPYRIGHT © 2009 WINNEBAGO INDUSTRIES INC.