DWG NO	ROLLER	HARDWARE KIT	DIM B	MODEL
169754-01	171153-02-CHT	171153-01-CHT	16'	H25T/H25R

RELEASE	REV A	DATE	DWG NO 169754
REV	ZONE	REVISION RECORD	DATE	DFTR-ORIG

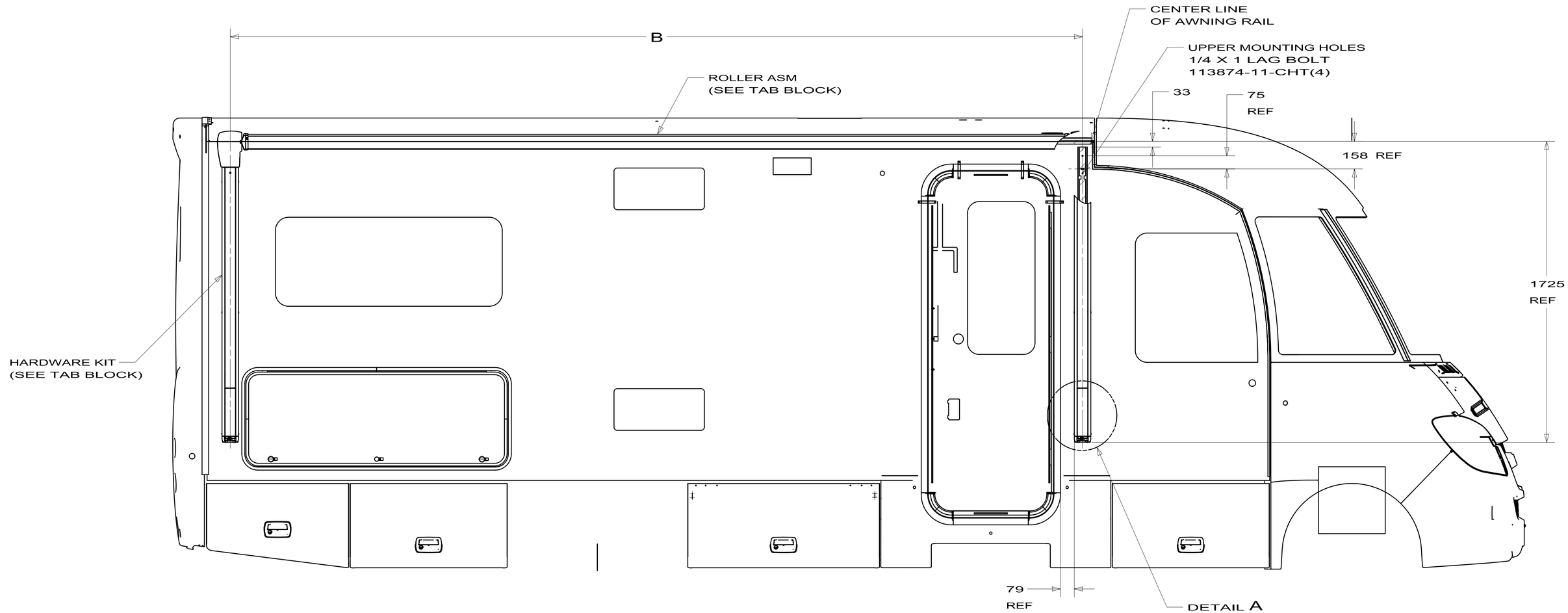

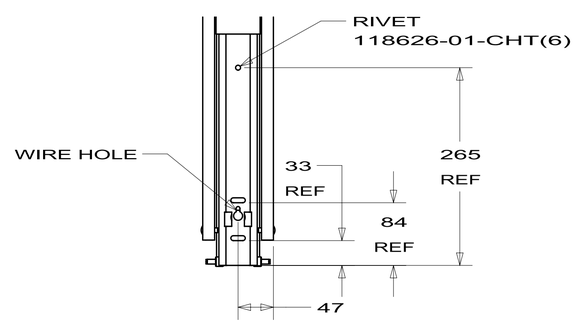

DETAIL A
(SHOWN W/OUT AWNING ARM COVER)

WINNEBAGO INDUSTRIES

COPYRIGHT 2009
WINNEBAGO
INDUSTRIES, INC.

DFTR	ORIG. DATE
CHKR	ALL DIMENSIONS ARE IN MILLIMETERS
P.E.	
M.E.	FIRST USED
DSNR	10 H25T

UNSPECIFIED TOLERANCES ARE:

WHOLE DIM (X)	±	3
ONE-PLACE (X.X)	±	1.5
TWO-PLACE (X.XX)	±	0.50
ANGLE	±	1°

MATERIAL:

THIRD ANGLE PROJECTION

DO NOT SCALE DRAWING

TITLE:
AWNING INSTL

SHEET 1 OF 1 | PART NO 169754 | REV

REF: 1

RELEASE	REV A	DATE	DWG NO 169757

REV	ZONE	REVISION RECORD	DATE	DFTR-ORIG

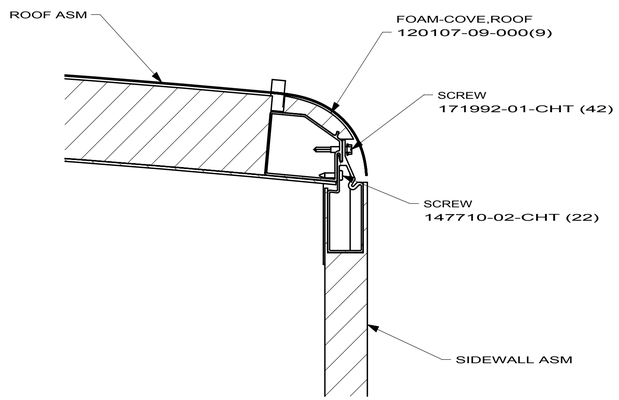

SECTION AA-AA

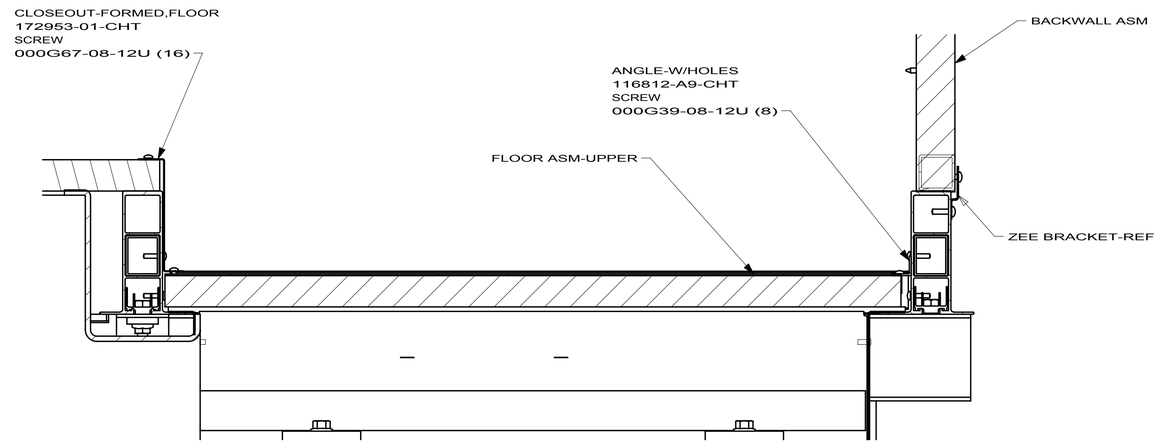

SECTION AB-AB

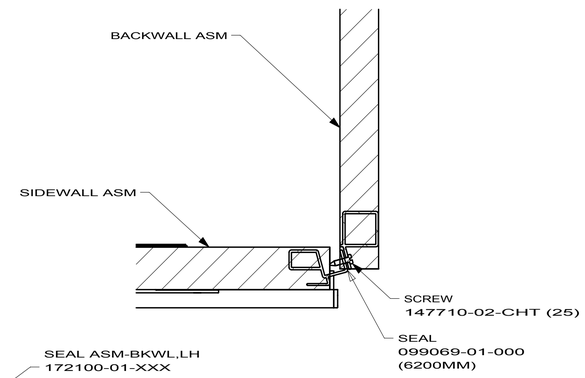

SECTION AE-AE

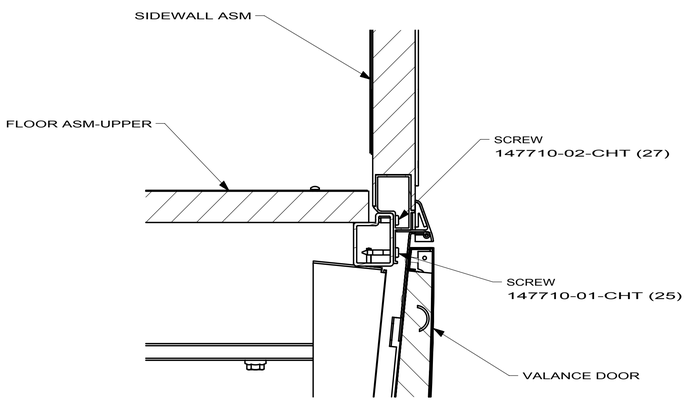

SECTION AC-AC

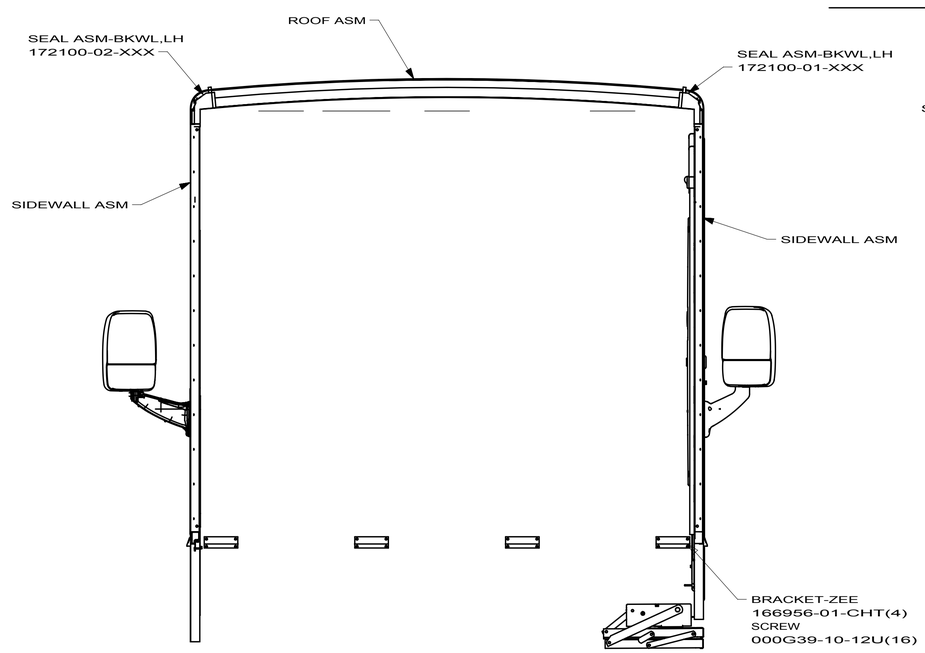

SECTION AD-AD

NOTES:

WINNEBAGO INDUSTRIES

COPYRIGHT 2009
WINNEBAGO
INDUSTRIES, INC.

DFTR	ORIG. DATE
CHKR	ALL DIMENSIONS ARE IN MILLIMETERS
P.E.	
M.E.	FIRST USED
DSNR	10 H25T

UNSPECIFIED TOLERANCES ARE:
WHOLE DIM (X) : 3
ONE-PLACE (X.X) :
TWO-PLACE (X.XX) :
ANGLE :

THIRD ANGLE PROJECTION

MATERIAL:

DO NOT SCALE DRAWING

TITLE:
BODY INSTL-SECTIONS

SHEET 1 OF 4 | PART NO 169757 | REV

REF:

DWG NO 169757

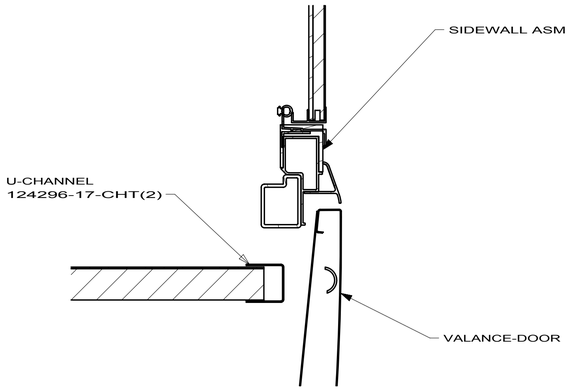

SECTION AF-AF

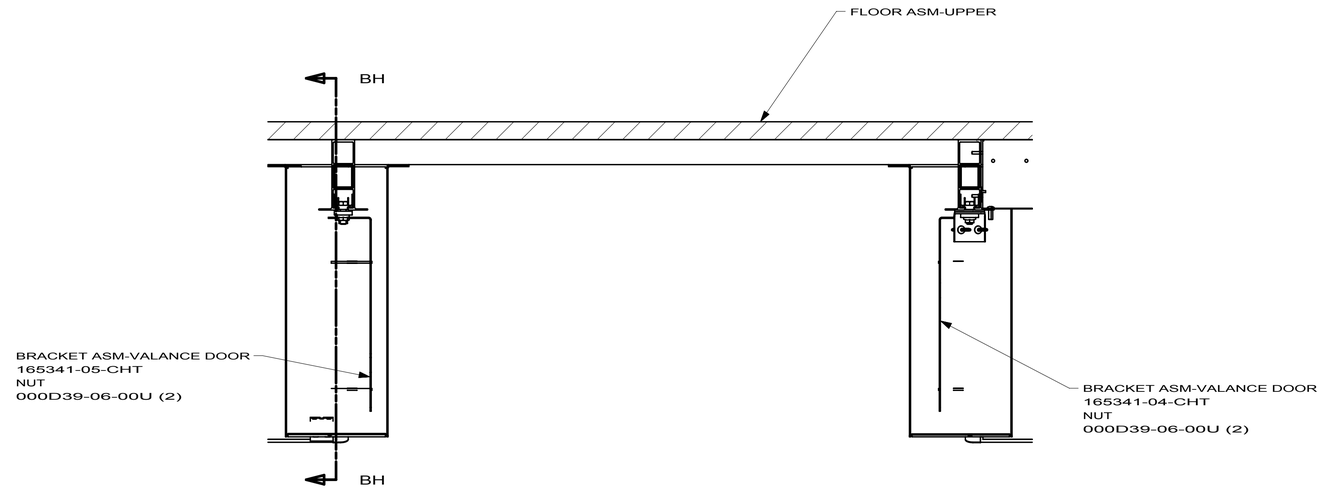

SECTION AG-AG

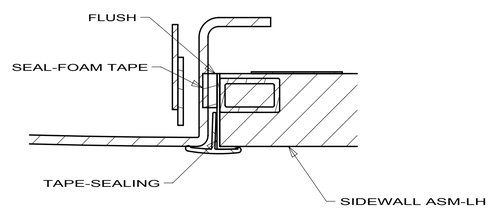

SECTION AJ-AJ

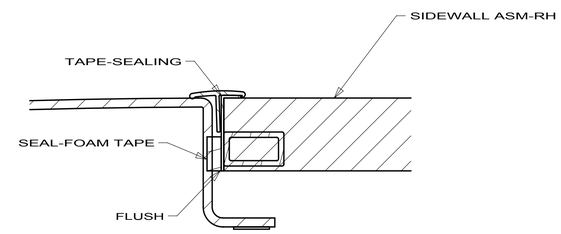

SECTION AK-AK

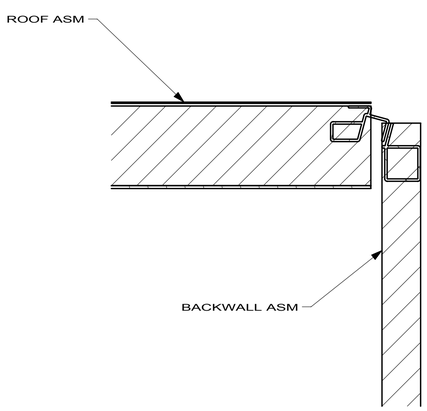

SECTION AH-AH

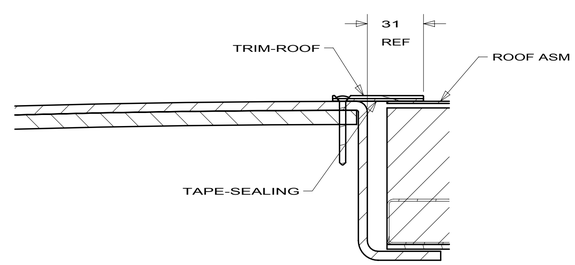

SECTION AL-AL

FIRST USED	10 H25T
DO NOT SCALE DRAWING	
TITLE:	BODY INSTL-SECTIONS
SHEET 2	PART NO 169757 REV

DWG NO 169757

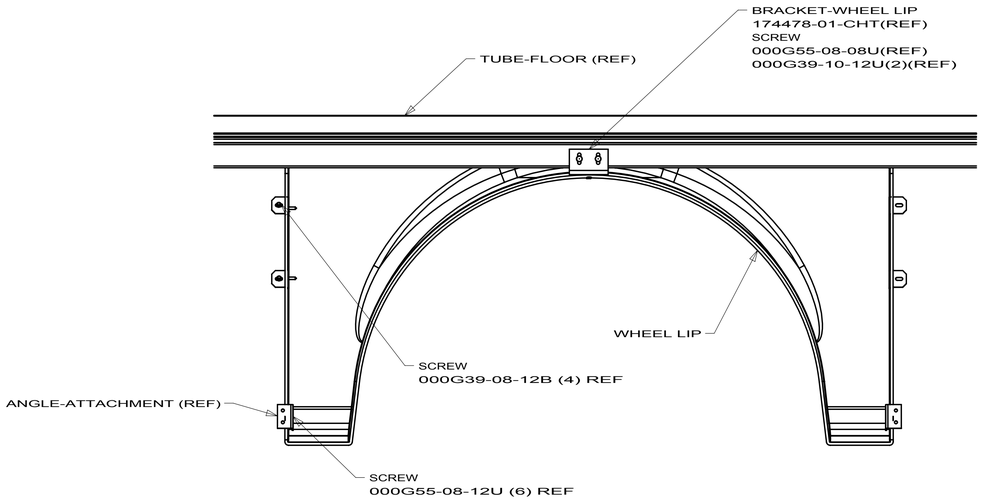

SECTION BD-BD
(SHOWN)
SECTION BE-BE
(OPPOSITE)

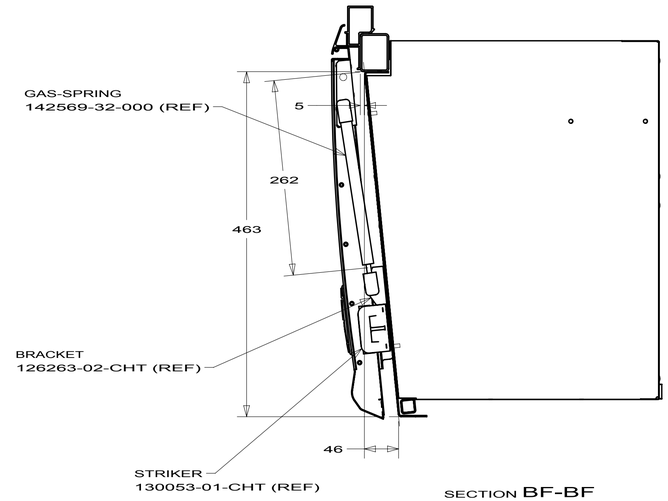

SECTION BF-BF
(TYP)

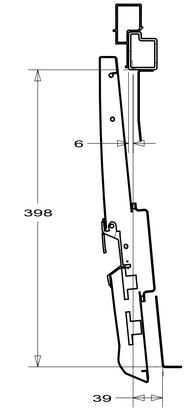

SECTION BG-BG
(SHOWN)
SECTION BC-BC
(OPPOSITE)

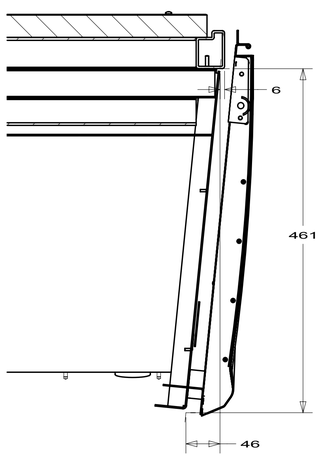

SECTION BH-BH

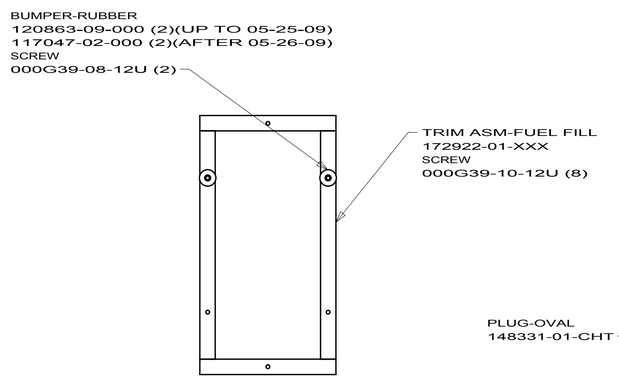

SECTION BJ-BJ

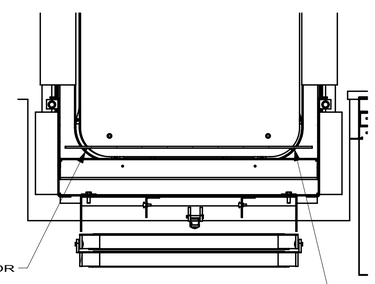

SECTION BB-BB

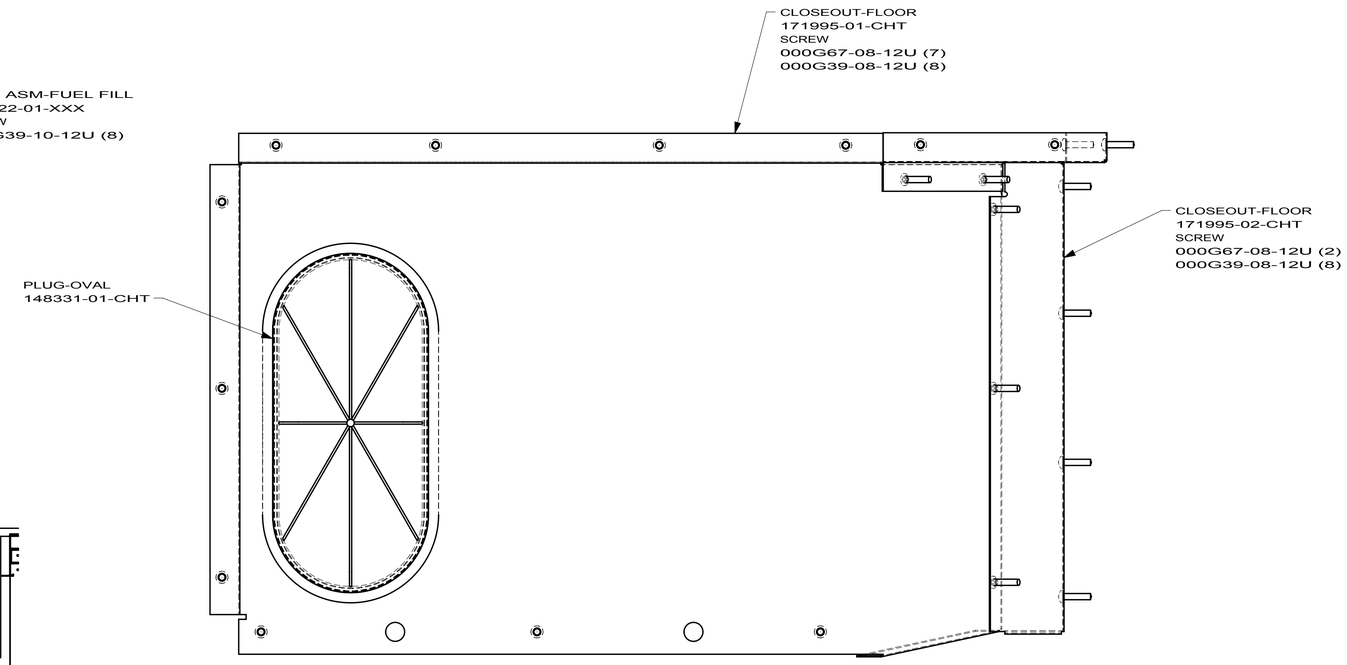

SECTION BA-BA

FIRST USED	10 H25T
DO NOT SCALE DRAWING	
TITLE:	BODY INSTL-SECTIONS
SHEET 3	PART NO 169757 REV

DWG NO 169757

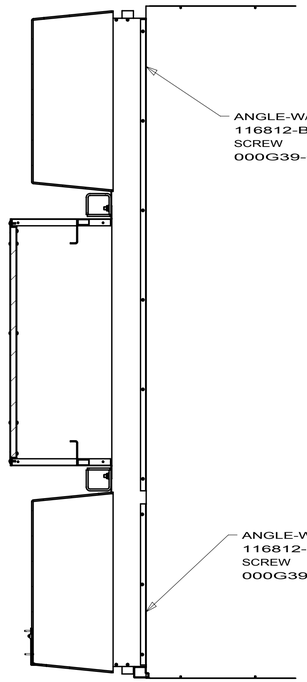

SECTION BN-BN

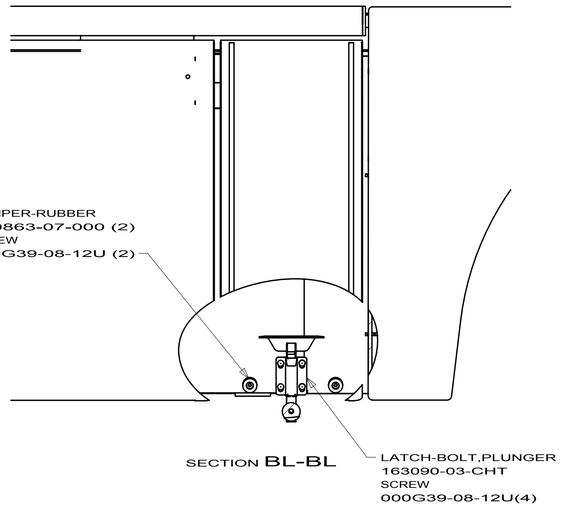

SECTION BL-BL

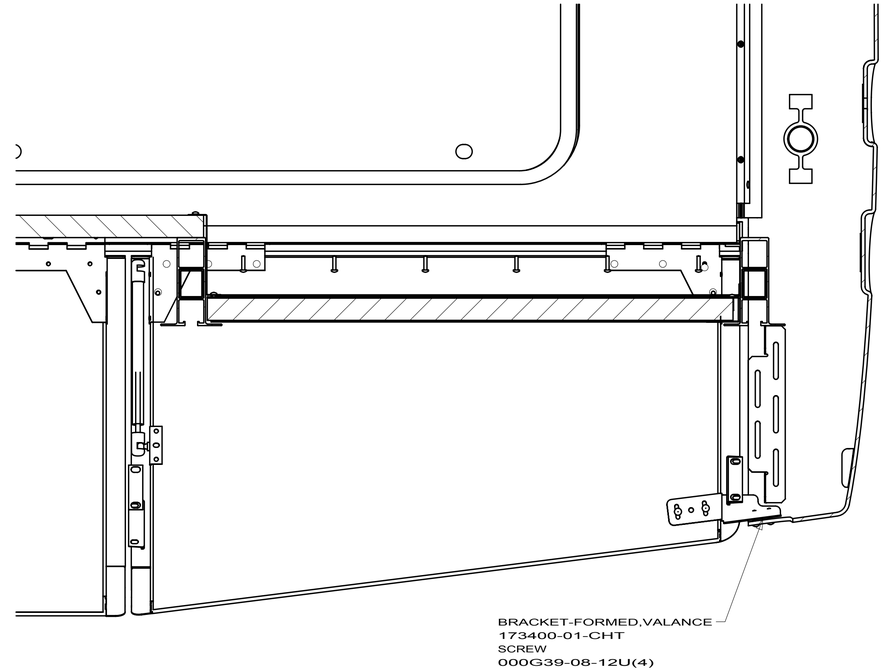

SECTION BM-BM

FIRST USED	10 H25T
	DO NOT SCALE DRAWING
TITLE:	BODY INSTL-SECTIONS
SHEET 4	PART NO 169757 REV

PANEL ASM-FRONT
171759-01-AN0
SCREW-SF/DR-10-16X.75 PPH
000G39-10-12U (49)
WASHER-FENDER 3/16IDX1.0OD
077071-01-000 (49)
RIVET-POP-AL 3/16X.438-.750L
165072-01-01A (8)

PANEL ASM-FENDER,RH
169164-03-XXX
SCREW-SF/DR-10-16X.75 PPH
000G39-10-12U (5)
WASHER-FENDER 3/16IDX1.0OD
077071-01-000 (5)
PLATE ASM-STUD,RH
171437-02-CHT
BOLT-HEX-SER FLG 5/16-18X3/4
000C26-05-12U (2)
NUT-HEX-SER FLG LK 5/16-18
000D39-05-00U (2)
PLATE-STUD
171437-01-CHT

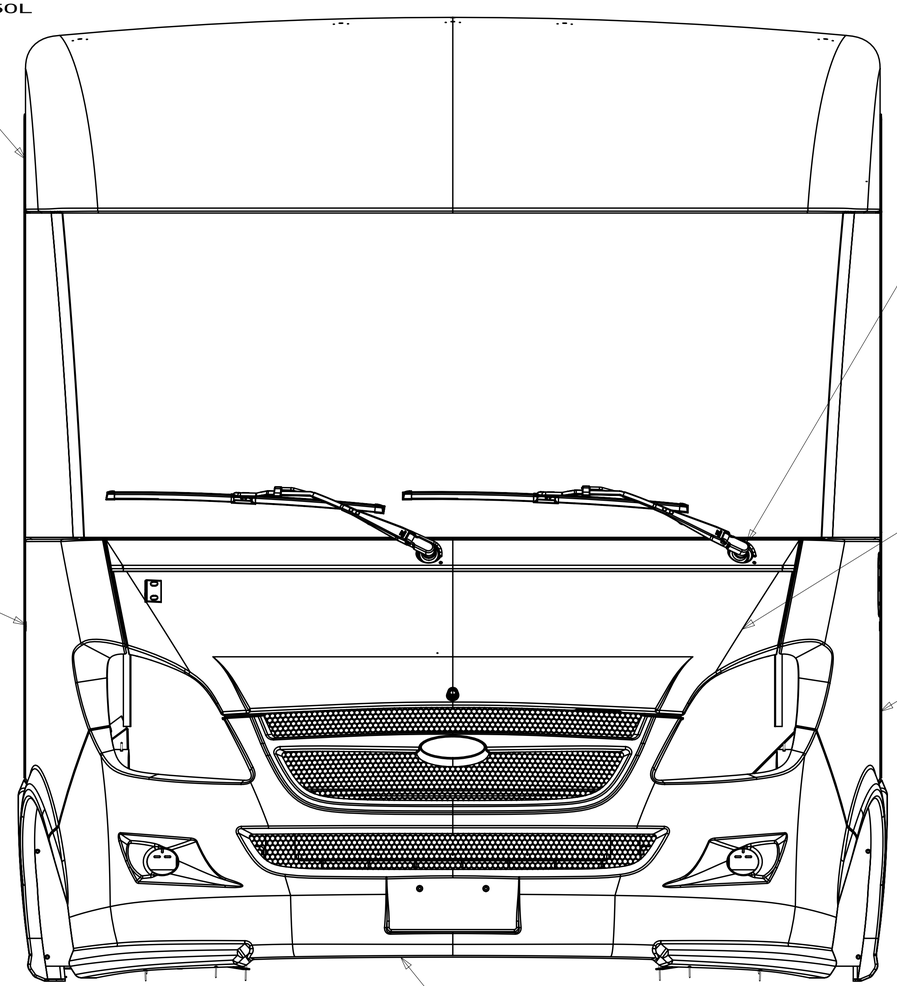

PANEL ASM-COWL
169789-02-AN0(UP TO 10-09-09)
174706-02-AN0(AFTER 10-10-09)
SCREW-SF/DR-10-16X.75 PPH
000G39-10-16U (9)
WASHER-FENDER 3/16IDX1.0OD
077071-01-000 (9)
SHIM-COWL/FENDER,063
120494-08-01A (4)
PLATE-STUD
171437-01-02B

PANEL ASM-HOOD,OUTER
169162-02-AN0
WASHER-FENDER
142195-01-02A (4)
NUT-HEX-SER FLG LK 1/4-20
000D39-04-00U (4)

PANEL ASM-FENDER,LH
169164-04-AN0
SCREW-SF/DR-10-16X.75 PPH
000G39-10-12U (6)
WASHER-FENDER 3/16IDX1.0OD
077071-01-000 (4)
PLATE ASM-STUD,LH
171437-03-02B
BOLT-HEX-SER FLG 5/16-18X3/4
000C26-05-12U (2)
NUT-HEX-SER FLG LK 5/16-18
000D39-05-00U (2)

PANEL ASM-BUMPER,FRONT
169163-02-AN0
BOLT-HEX-SER FLG 5/16-18X3/4
000C26-05-12 (4)
PLATE ASM-STUD
172992-02-02B (2)
NUT-HEX-SER FLG LK 5/16-18
000D39-05-00U (10)
BRACKET-BUMPER,CHASSIS,RH
171395-04-02B(AFTER 11-06-09)
BRACKET-BUMPER,CHASSIS,LH
171395-05-02B(AFTER 11-06-09)

1 REMOVE AND DISCARD CHASSIS SUPPLIED LATCH. USE CHASSIS SUPPLIED LATCH BOLTS TO ATTACH NEW LATCH.

NOTES:

BODY PANEL INSTL-FRONT

1 3 169759

11/23/2009

DWG NO 169759

SEAL-3/4X3/4
104692-01-000(AFTER 05-14-09, UP TO 08-31-09))
(REF LENGTH 2276)

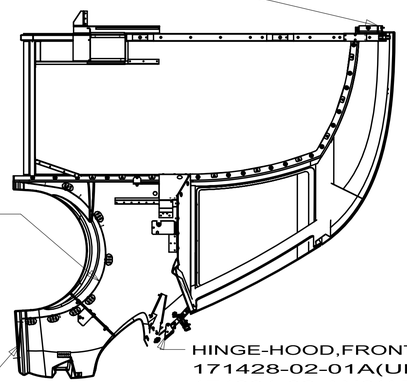

LINER-WHEELWELL,LH
170209-02-01A
RIVET-POP-AL
118626-01-01A (8)
SCREW
000G55-08-12U (8)

HINGE-HOOD,FRONT,LH
171428-02-01A(UP TO 11-22-09)
174991-02-AN0(AFTER 11-23-09)
NUT-HEX-SER FLG LK 1/4-20
000D39-04-00U (2)

STRAP-W/HOLES
131697-02-02B (2)
RIVET-POP-AL
118626-03-01A (4)

SECTION BB-BB

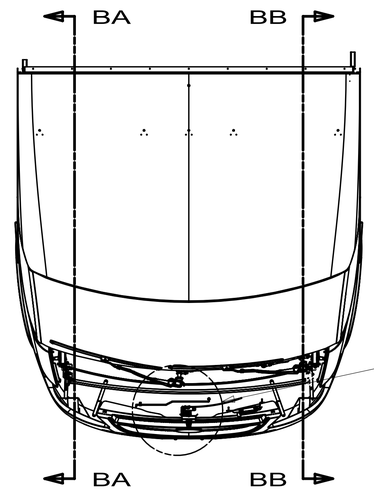

DETAIL CA

SPACER-PANEL,DASH
172581-01-000
SCREW
000G39-10-40U (3)
WASHER
077071-01-000 (3)

SECTION BE-BE
RH SHOWN
(LH OPPOSITE)

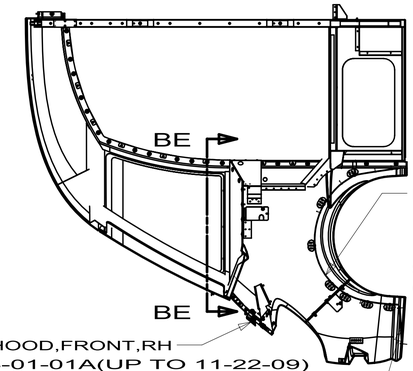

LINER-WHEELWELL,RH
170209-01-01A
RIVET-POP-AL
118626-01-01A (8)
SCREW
000G55-08-12U (8)

HINGE-HOOD,FRONT,RH
171428-01-01A(UP TO 11-22-09)
174991-01-AN0(AFTER 11-23-09)
NUT-HEX-SER FLG LK 1/4-20
000D39-04-00U (2)

STRAP-W/HOLES
131697-02-02B (2)
RIVET-POP-AL
118626-03-01A (4)

SECTION BA-BA

TRIM-FRONT,ROOF
171145-07-AN0(UP TO 05-13-09)
171144-07-AN0(AFTER 05-14-09,UP TO 08-31-09)
174723-01-01A(AFTER 09-01-09)
SCREW
000G12-06-24T(13)

TRIM ASM-FRONT,SIDEWALL,RH
173489-01-AN0(UP TO 05-13-09)
173488-01-AN0(AFTER 05-14-09)
SCREW
0G6008-16-390 (4)(AFTER 05-14-09)

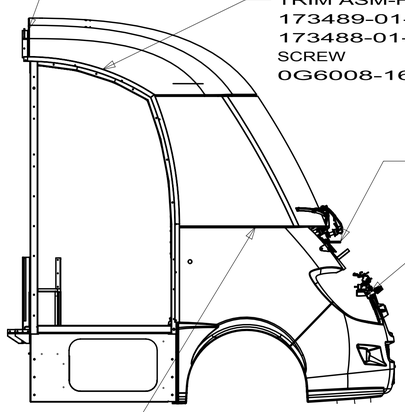

SEAL-D SECTION,6X10 FOAM RUB
112160-02-000 (1800)

BRACKET-BUMPER,UPPER,RH
172519-03-02B
BOLT-HOOD ADJ
058786-01-000
NUT
000D39-05-00U

SEAL-STRIP
99069-01-000(AFTER 05-14-09)
(UP TO 06-02-09)
(REF LENGTH 900)

PLENUM ASM-INTAKE,FRESH AIR
170208-02-AN0,PLENUM (UP TO 08-31-09)
PANEL-AIR INTAKE
174671-02-AN0 (AFTER 09-01-09)
SCREW
000G55-08-12T (2)
CLIP-XMAS TREE
094362-05-000(2)(AFTER 09-01-09)

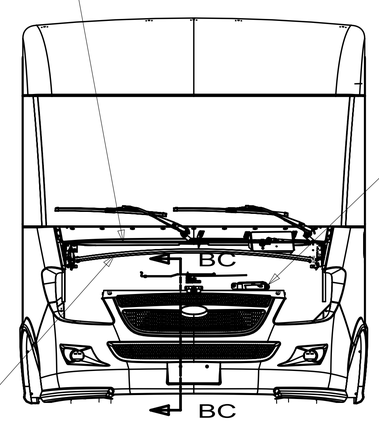

LATCH ASM-HOOD
172578-01-AN0

SCREW
000G39-10-169 (2)
WASHER
077071-01-000 (2)

TUBE-SWEPT,TIMING,HOOD
172905-01-01A
BOLT-HEX-SER FLG 1/4-20X1.50
000C26-04-24U (2)
NUT-HEX-SER FLG LK 1/4-20
000D39-04-00U (2)

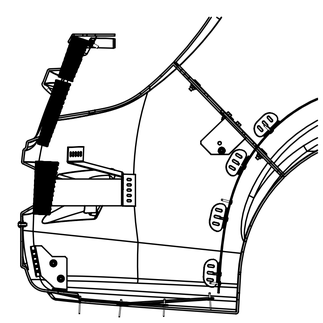

SECTION BC-BC
RH SHOWN
(LH OPPOSITE)

TRIM-FRONT,ROOF,LH
174723-02-01A(AFTER 09-01-09)
SCREW
000G12-06-24T(13)(AFTER 09-01-09)
TRIM ASM-FRONT,SIDEWALL,LH
173489-02-AN0(UP TO 05-13-09)
173488-02-AN0(AFTER 05-14-09)
SCREW
0G6008-16-390(4)

SEAL-STRIP
99069-01-000(AFTER 05-14-09)
(UP TO 06-02-09)
(REF LENGTH 900)

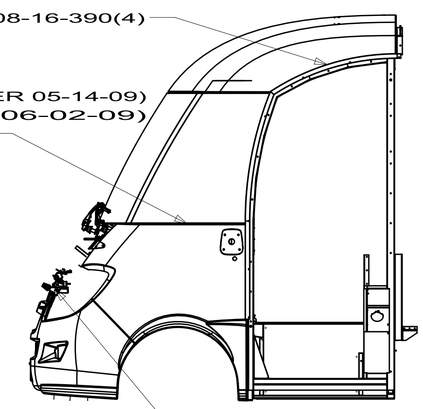

BRACKET-BUMPER,UPPER,LH
172519-04-CHT
BOLT-HOOD ADJ
058786-01-000
NUT
000D39-05-00U

FIRST USED	10 H-SERIES
	DO NOT SCALE DRAWING
TITLE:	BODY PANEL INSTL-FRONT
SHEET 2	PART NO 169759 REV

11/23/2009

DWG NO 169759

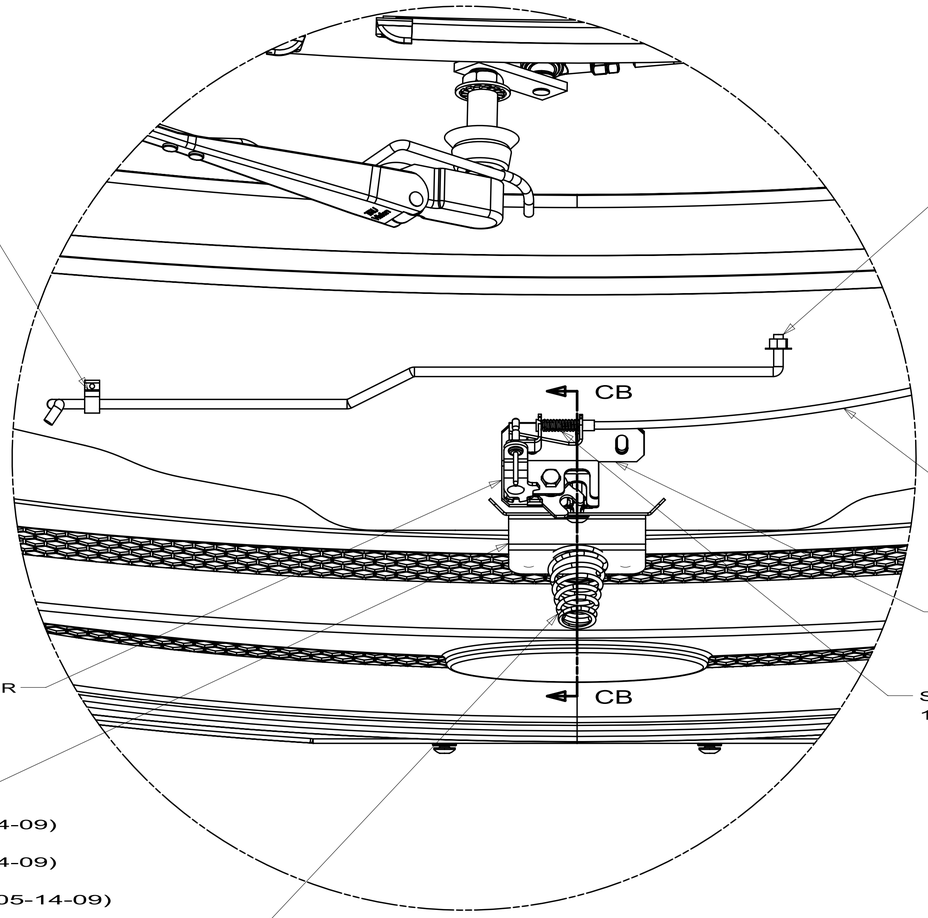

PLASTIC J CLIP(WIPER WASHER HOSE)
(CHASSIS SUPPLIED)
RIVIT
000H16-04-06R

ROD-PROP,HOOD
172991-01-02B
NUT-PAL,WASHER TYPE,1/4"
139130-01-01A
1

CHASSIS SUPPLIED
RELEASE CABLE
1

BRACKET-SUPPORT,CABLE
170845-01-02B

SPRING-COMPRESSION,1 1/4"
172973-01-01A

BRACKET ASM-LATCH,HOOD,LOWER
170852-01-AN0

BRACKET-SPRING,HOOD
173869-01-04B(AFTER 05-14-09)
PLATE-SPRING,HOOD
173869-02-04B(AFTER 05-14-09)
RIVET
000H15-04-03L (2)(AFTER 05-14-09)

SPRING-COMPRESS,CONICAL,1.88"
173558-01-01A(UP TO 05-13-09)
173558-02-01A(AFTER 05-14-09)

DETAIL CA

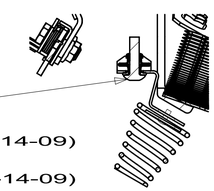

NUT-JACK
087234-01-000(AFTER 05-14-09)
SCREW
000G50-04-20U(AFTER 05-14-09)
RIVIT
118626-01-01A(2)

SECTION CB-CB

1 DRILL ∅ 6.35 HOLE IN RADIATOR SUPPORT FOR INSTALL. HOLE CENTER LOCATED VERTICALLY SUCH THAT PROP ROD LAYS HORIZONTAL ON RADIATOR SUPPORT.

NOTES:

FIRST USED	10 H-SERIES
	DO NOT SCALE DRAWING
TITLE:	BODY PANEL INSTL-FRONT
SHEET 3	PART NO 169759 REV

11/23/2009

DWG NO	PANEL-COWL	SHEET	WEIGHT ±10%
169789-01	---	1	6.3
169789-02	169789-01-CHT	2	10.9

RELEASE	REV A	DATE	DWG NO 169789
REV	ZONE	REVISION RECORD	DATE	DFTR-ORIG

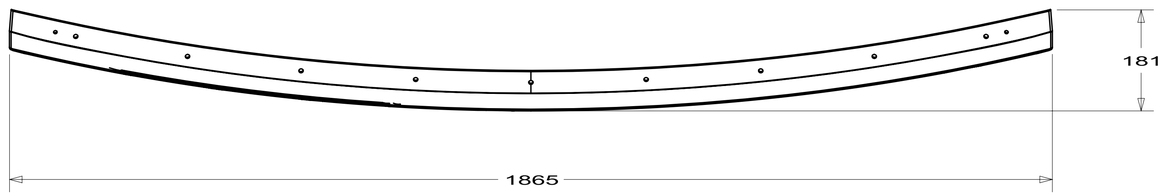

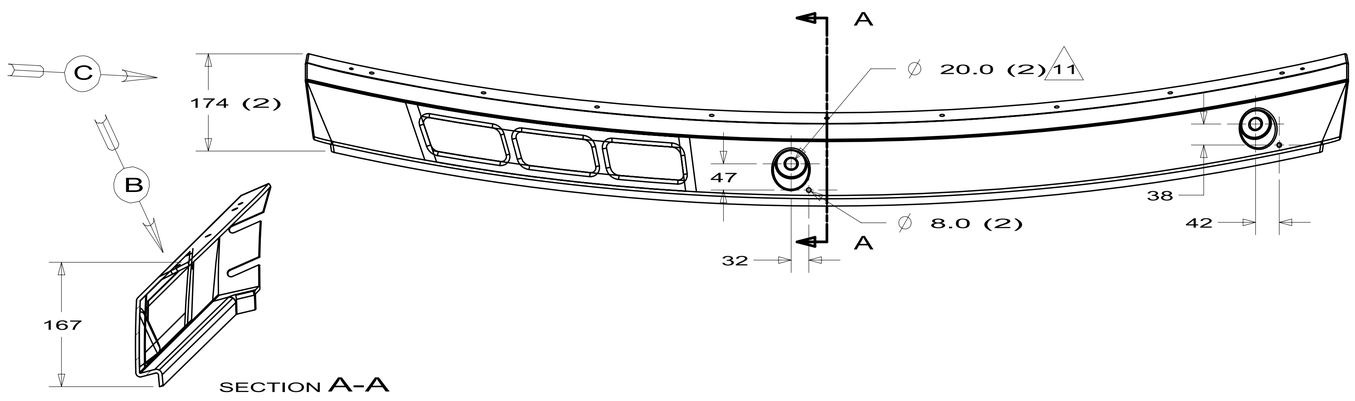

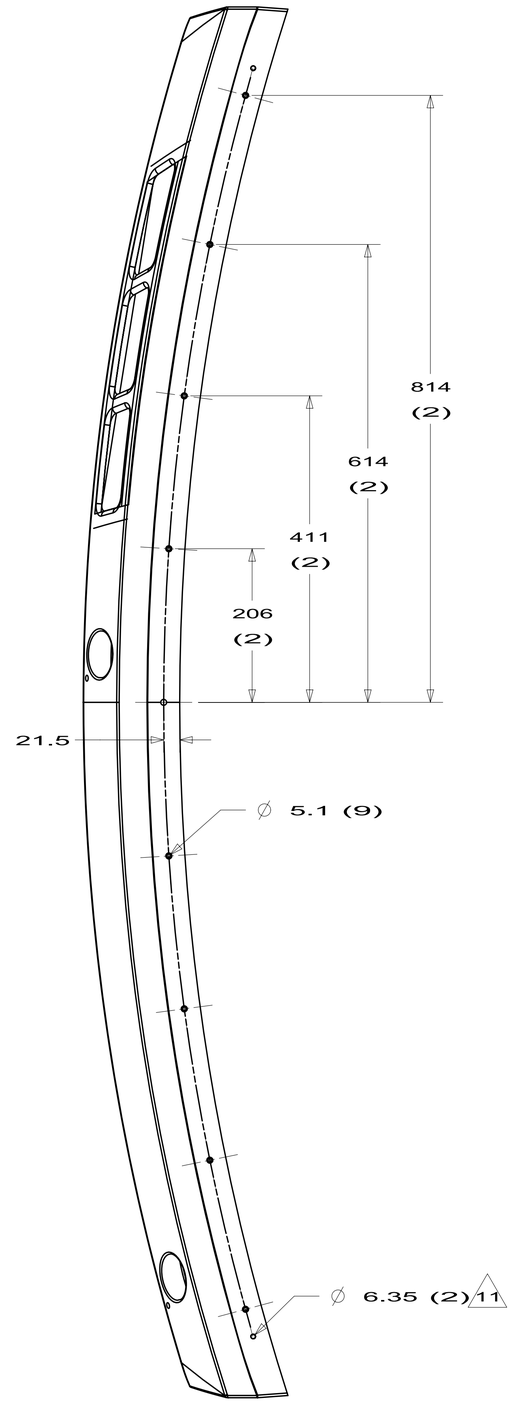

VIEW B

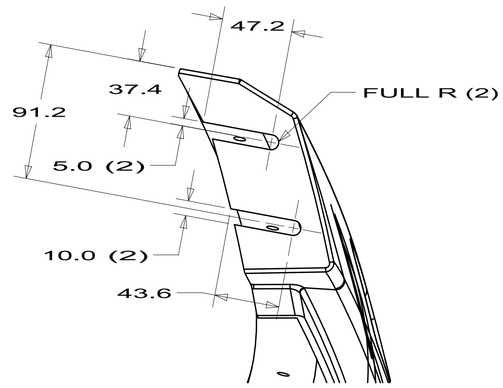

VIEW C
RH SHOWN
(LH OPPOSITE)

13 SEAL ALONG BOTTOM OF PLATE WITH MANUS 072889-19-000

12 HOLES IN BRACKET TO BE CENTERED WITH .75 MM OF HOLE CENTERS IN FIBERGLASS.

11 DRILLED HOLE TO HAVE A CONCENTRICITY OF 0.5 MM OF THEORETICAL.

10 CENTER ON FEATURE.

9. USE ADHESIVE-RESIN 112481-03-000 AND ADHESIVE-CURATIVE 112481-04-000 FOR BONDING PARTS.

8 DIMENSION MEASURED ALONG SURFACE FROM INTERSECTING SURFACES.

7. 3D SOLID UNIGRAPHICS MODEL TO BE USED TO CREATE MOLDS AND INSPECT PARTS.

6. MOLD SURFACE TO BE FREE OF DEFECTS AND VISUAL DEVIATION.

5 TRIMMED EDGE IS DEFINED ON THE MOLD UNLESS OTHERWISE SPECIFIED. MOLDED/TRIM DIMENSION TOLERANCE ±1.5 UNLESS OTHERWISE SPECIFIED. LOCATION DIMENSIONAL TOLERANCE TO BE ±2.5. ALL TOLEARNCE DEVIATION ON UNDIMENSIONED FEATURES TO BE APPROVED BY WINNEBAGO ENGINEERING

4. TOTAL FINISHED PART SURFACE AREA, 4.7 SQ FT.

3. MAXIMUM DRAFT ANGLE 2° .

2. WALL THICKNESS 5.0 ±1.5.

1. REMOVE ALL BURRS AND SHARP EDGES.

NOTES:

SEE CHART
FOR COLOR VARIATIONS OF THIS PART

COPYRIGHT 2009
WINNEBAGO
INDUSTRIES, INC.

DFTR	ORIG. DATE
CHKR	ALL DIMENSIONS ARE IN MILLIMETERS
P.E.	
M.E.	FIRST USED
DSNR	10 H-SERIES
UNSPECIFIED TOLERANCES ARE: WHOLE DIM (X) ± ONE-PLACE (X.X) ± TWO-PLACE (X.XX) ± ANGLE ± (5)	MATERIAL: FIBERGLASS ES0020
THIRD ANGLE PROJECTION	

DO NOT SCALE DRAWING

TITLE: PANEL-COWL

SHEET 1 OF 2 | PART NO 169789 | REV

REF:

DWG NO 169789

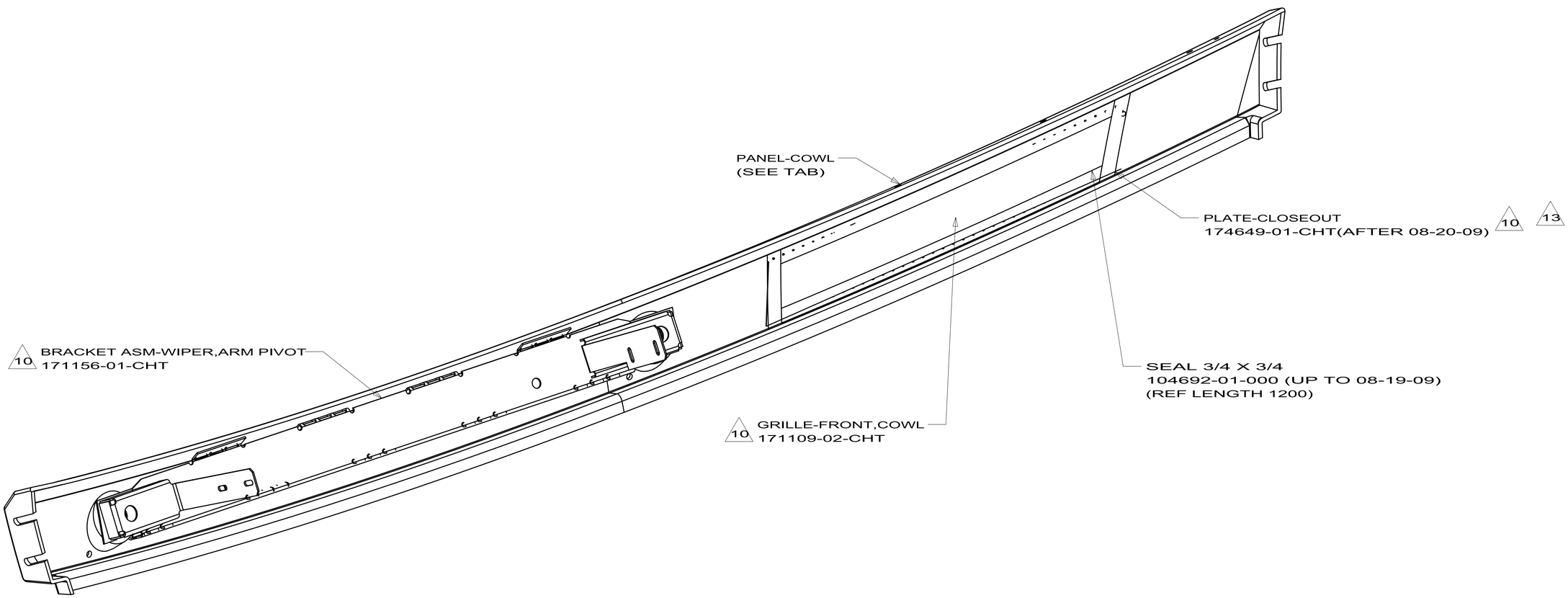

FIRST USED	10 H-SERIES
	DO NOT SCALE DRAWING
TITLE:	PANEL-COWL
SHEET 2	PART NO 169789 REV

DWG NO	PANEL-HOOD	SHEET	WEIGHT ± 10%
169162-01	---	1,2	14.8
169162-02	169162-01-CHT	2,3	17.3

RELEASE	REV A	DATE	DWG NO 169162
REV	ZONE	REVISION RECORD	DATE	DFTR-ORIG

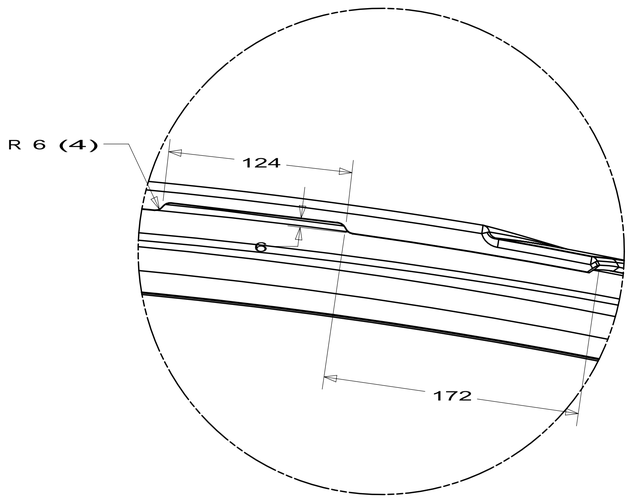

DETAIL AA

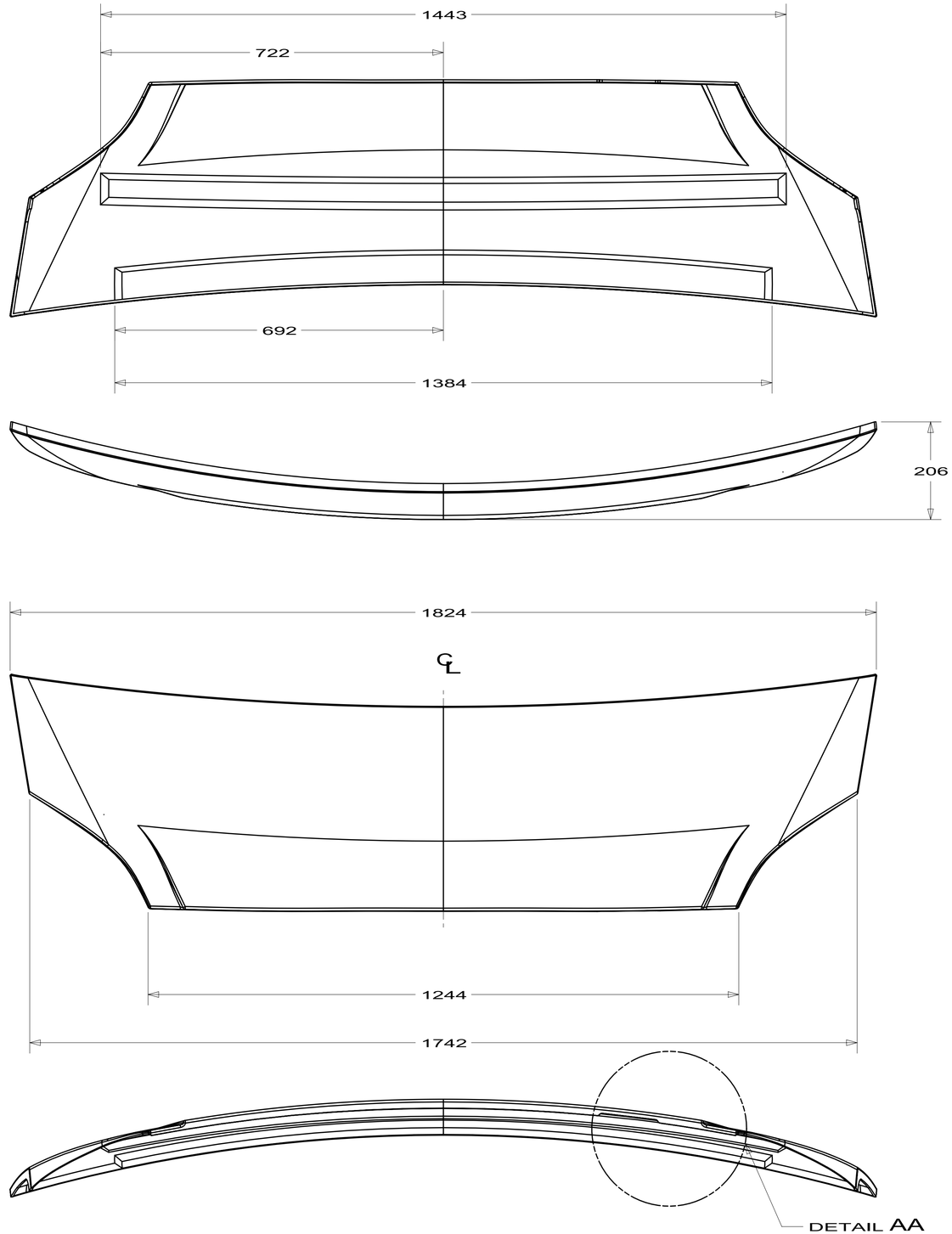

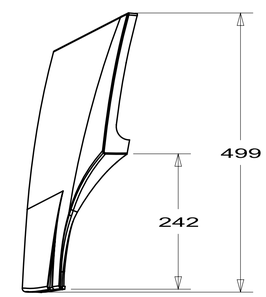

NOTES:

9 SURFACE OPPOSITE WELD STUD HEADS TO BE POSITIONED WITHIN A 1 MM SURFACE TOLERANCE TO THEORETICAL. WELD STUD CENTERLINES TO BE POSITIONED WITHIN A 1 MM CONCENTRICITY TOLERANCE TO THEORETICAL.

8 TO BE EMBEDDED IN FIBERGLASS (PRIMARY BOND).

7. 3D SOLID UNIGRAPHICS MODEL TO BE USED TO CREATE MOLDS AND INSPECT PARTS.

6. MOLD SURFACE TO BE FREE OF DEFECTS AND VISUAL DEVIATION.

5 TRIMMED EDGE IS DEFINED ON THE MOLD UNLESS OTHERWISE SPECIFIED. MOLDED/TRIM DIMENSION TOLERANCE ±1.5 UNLESS OTHERWISE SPECIFIED. LOCATION DIMENSIONAL TOLERANCE TO BE ±2.5. ALL TOLERANCE DEVIATION ON UNDIMENSIONED FEATURES TO BE APPROVED BY WINNEBAGO ENGINEERING

4. TOTAL FINISHED PART SURFACE AREA, 8.9 SQ FT.

3. MAXIMUM DRAFT ANGLE 2° .

2. WALL THICKNESS 5.0 ±1.5.

1. REMOVE ALL BURRS AND SHARP EDGES.

SEE CHART

FOR COLOR VARIATIONS OF THIS PART

WINNEBAGO INDUSTRIES

COPYRIGHT 2009 WINNEBAGO INDUSTRIES, INC.

DFTR	ORIG. DATE
CHKR	ALL DIMENSIONS ARE IN MILLIMETERS
P.E.	
M.E.	FIRST USED
DSNR	10 H-SERIES
UNSPECIFIED TOLERANCES ARE: WHOLE DIM (X) ± ; ONE-PLACE (X.X) ± ; TWO-PLACE (X.XX) ± ; ANGLE ± ; 5	MATERIAL: FIBERGLASS ES0020
THIRD ANGLE PROJECTION	

DO NOT SCALE DRAWING

TITLE: PANEL-HOOD,OUTER

SHEET 1 OF 3 | PART NO 169162 | REV

REF: 1

DWG NO 169162

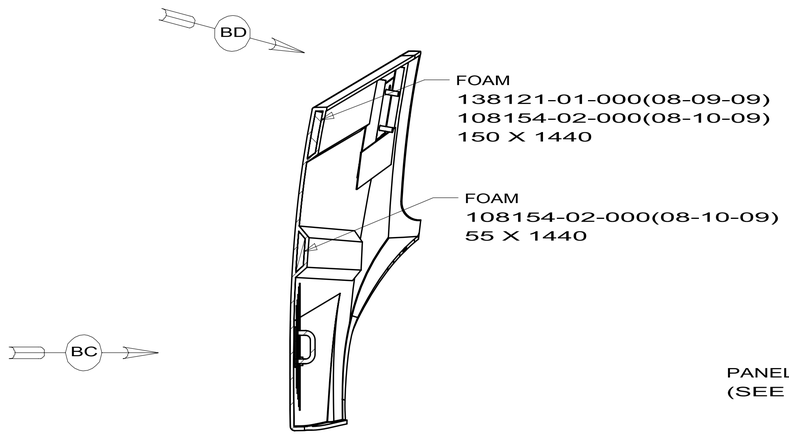

SECTION BA-BA

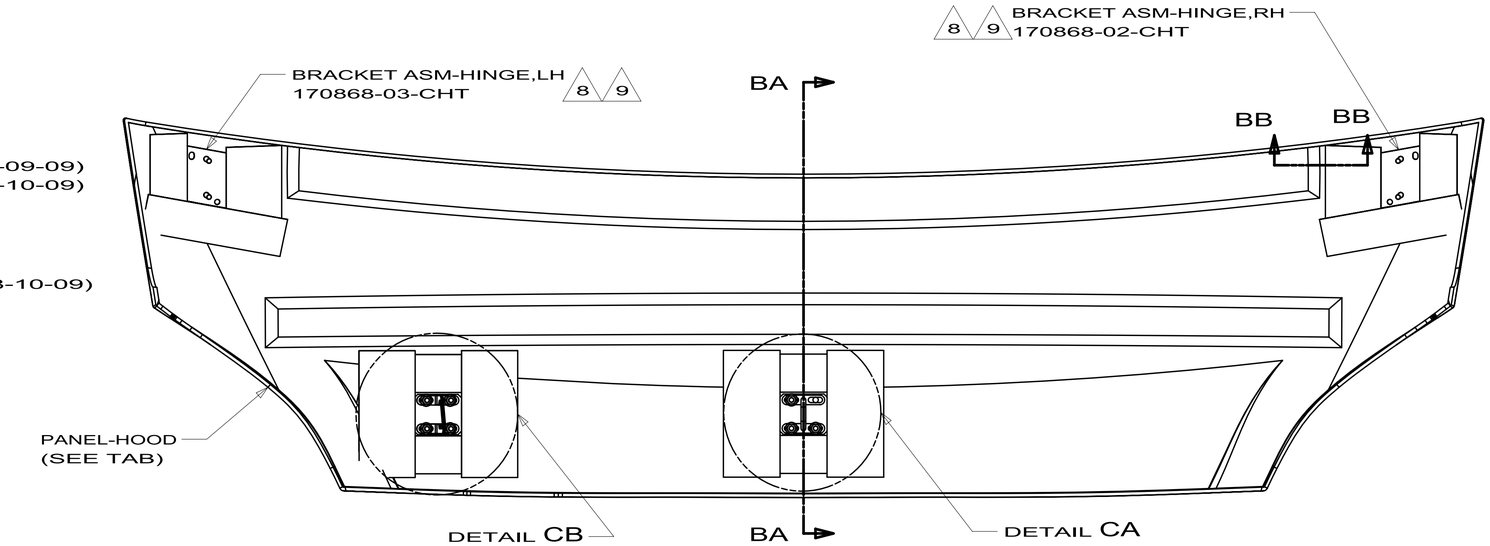

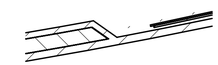

SECTION BB-BB

RH SHOWN
(LH OPPOSITE)

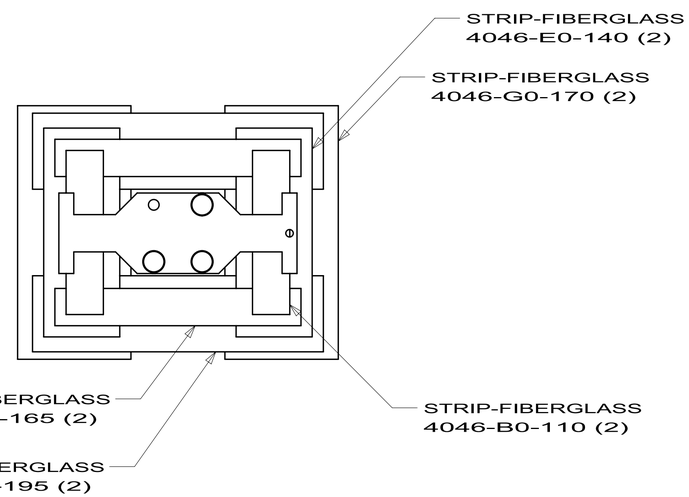

VIEW BC
(TAB -01 NOT SHOWN)
2 PLCS

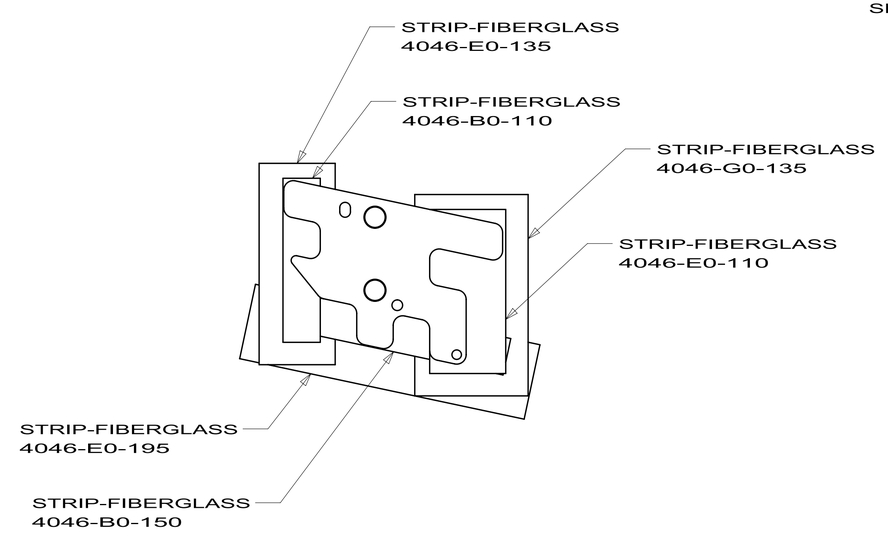

VIEW BD
RH SHOWN
(LH OPPOSITE)
(TAB -01 NOT SHOWN)

FIRST USED	10 H-SERIES
	DO NOT SCALE DRAWING
TITLE:	PANEL-HOOD,OUTER
SHEET 2	PART NO 169162 REV

DWG NO 169162

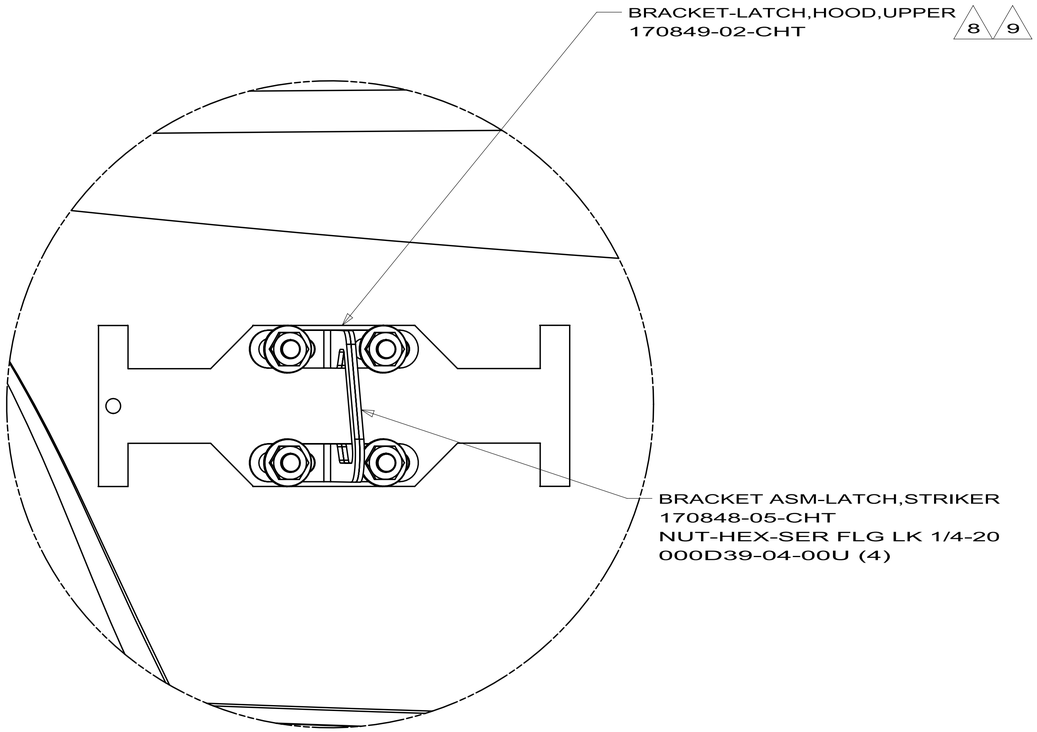

DETAIL CB
(FIBERGLASS STRIPS
NOT SHOWN)

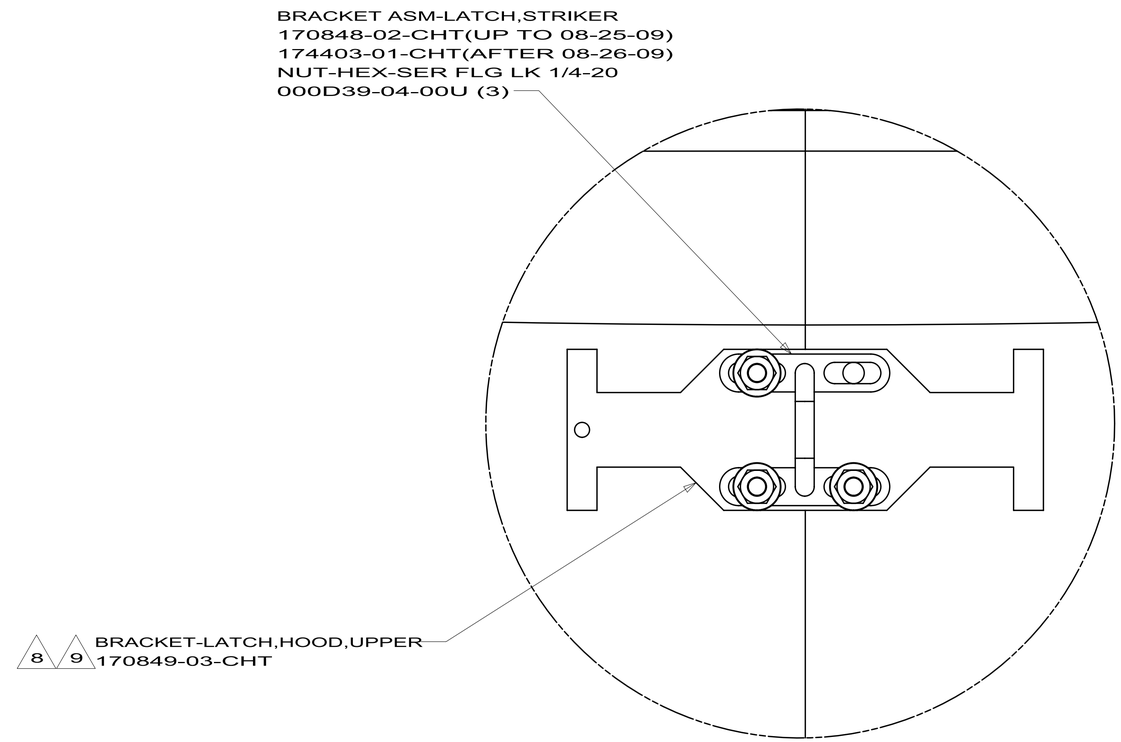

DETAIL CA
(FIBERGLASS STRIPS
NOT SHOWN)

FIRST USED	10 H-SERIES
	DO NOT SCALE DRAWING
TITLE:	PANEL-HOOD,OUTER
SHEET 3	PART NO 169162 REV

DWG NO 169163

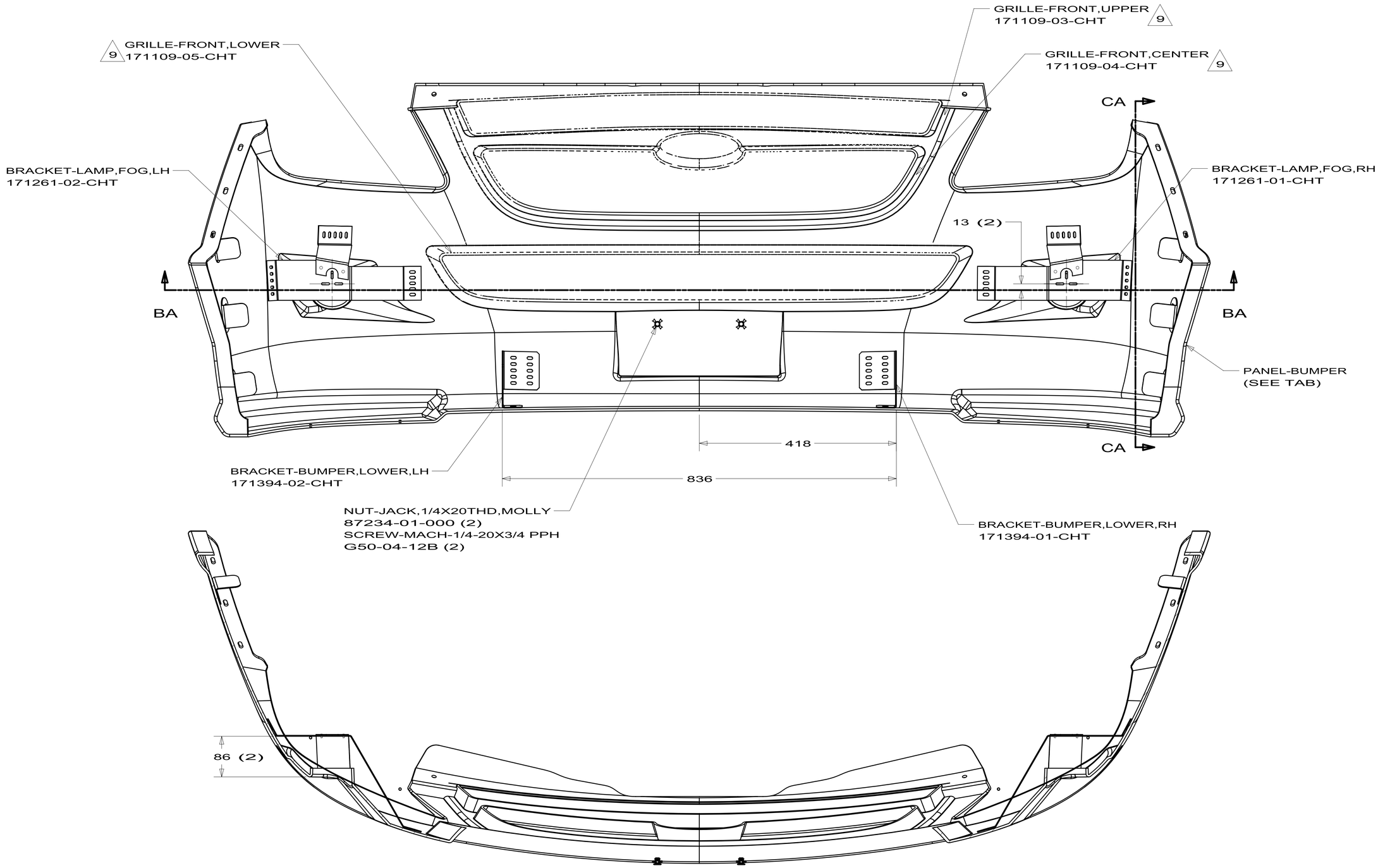

169163-02

SECTION BA-BA

FIRST USED	10 H-SERIES
	DO NOT SCALE DRAWING
TITLE:	PANEL-BUMPER,FRONT
SHEET 2	PART NO 169163 REV

DWG NO 169163

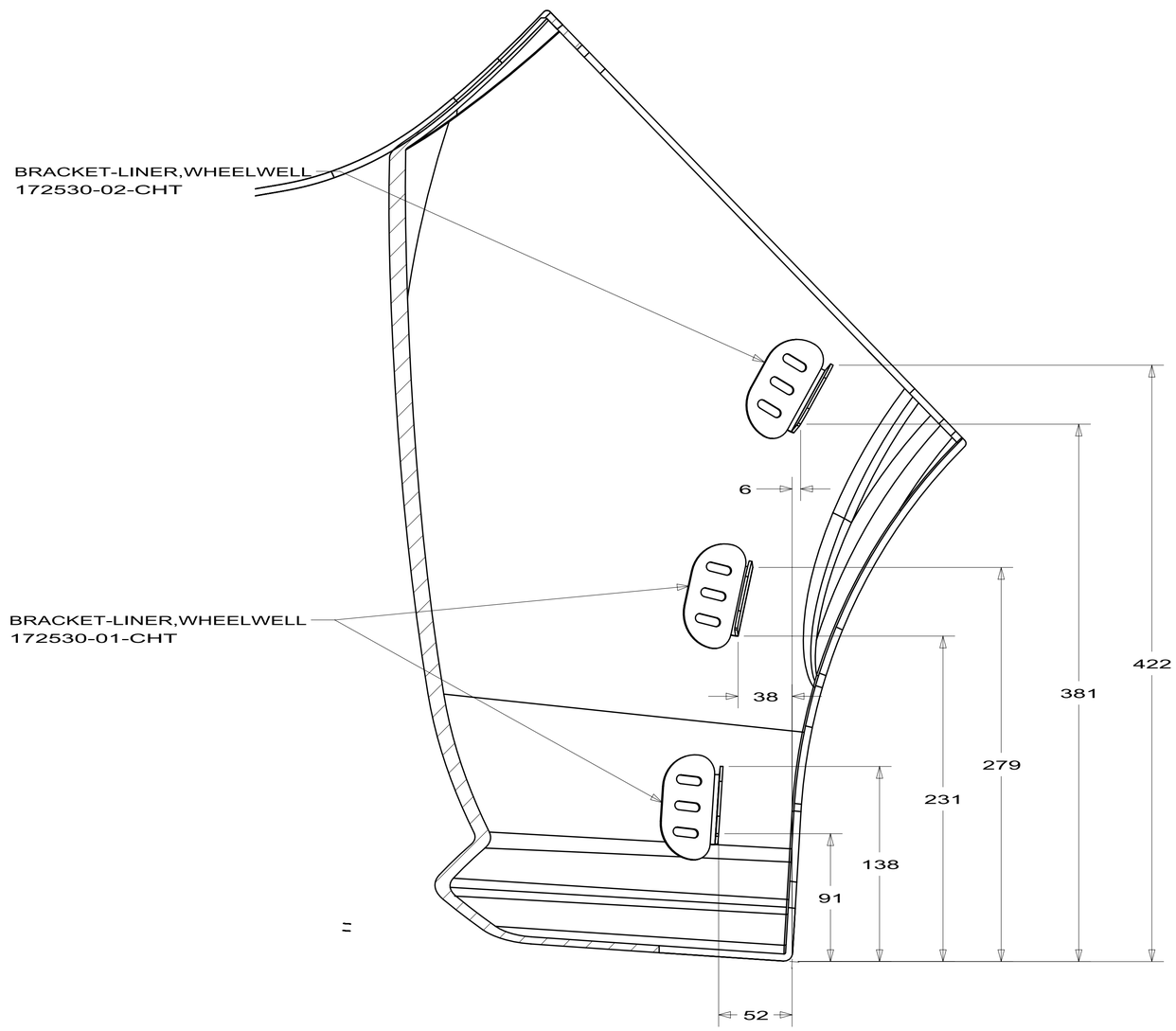

SECTION CA-CA

LH SHOWN
(RH OPPOSITE)

FIRST USED	10 H-SERIES
	DO NOT SCALE DRAWING
TITLE:	PANEL-BUMPER,FRONT
SHEET 3	PART NO 169163 REV

DWG NO 169164

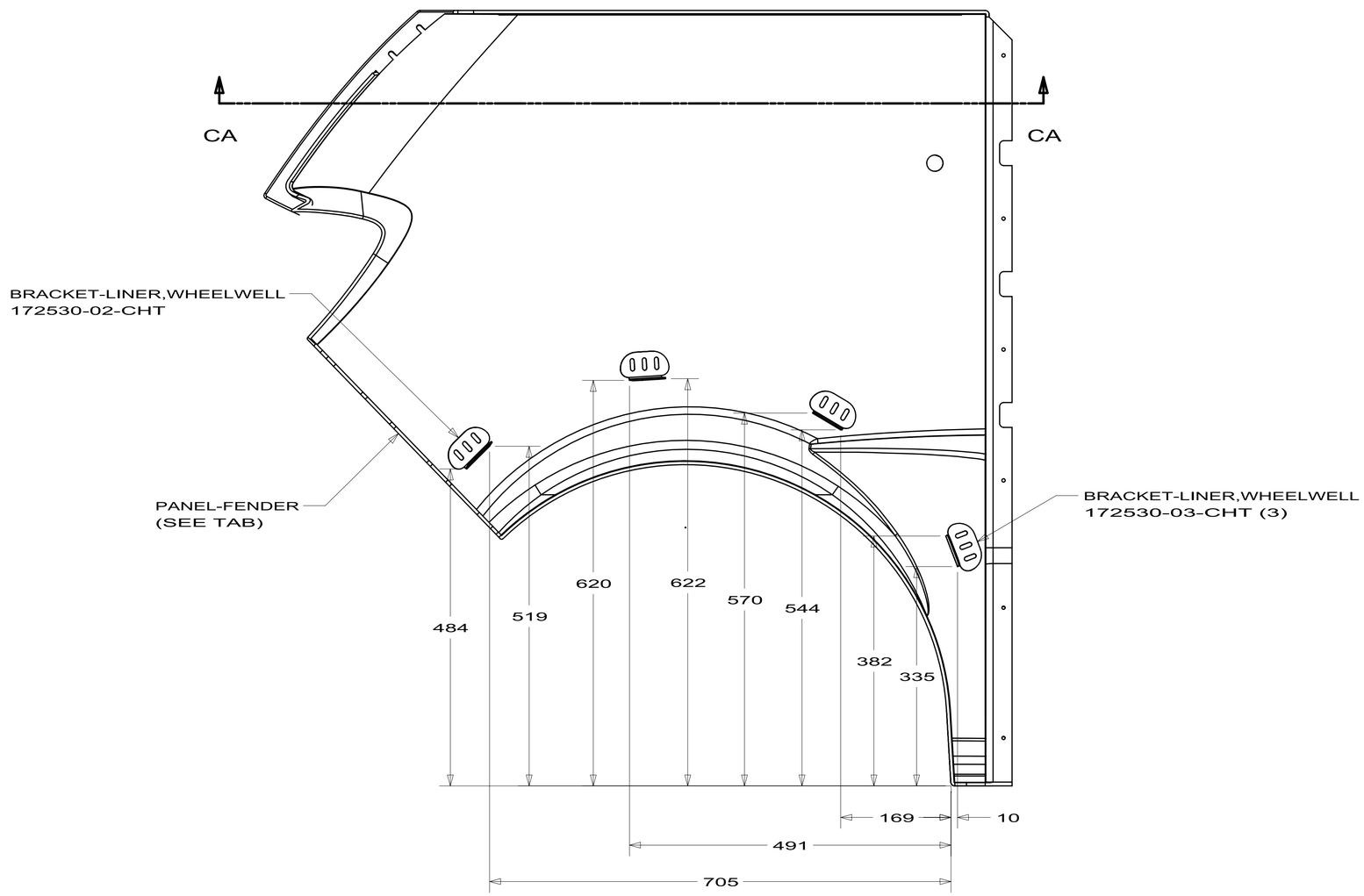

169164-03

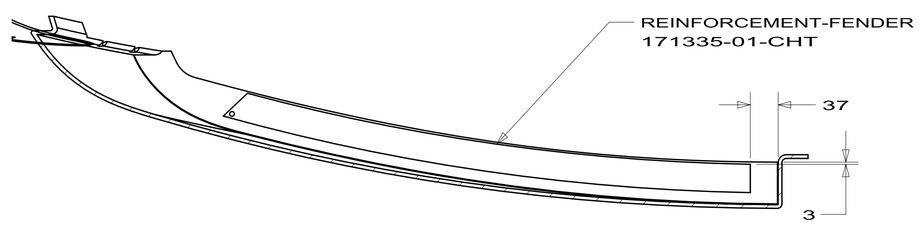

SECTION CA-CA

FIRST USED	10 H-SERIES
	DO NOT SCALE DRAWING
TITLE:	PANEL-FENDER
SHEET 3	PART NO 169164 REV

DWG NO 169164

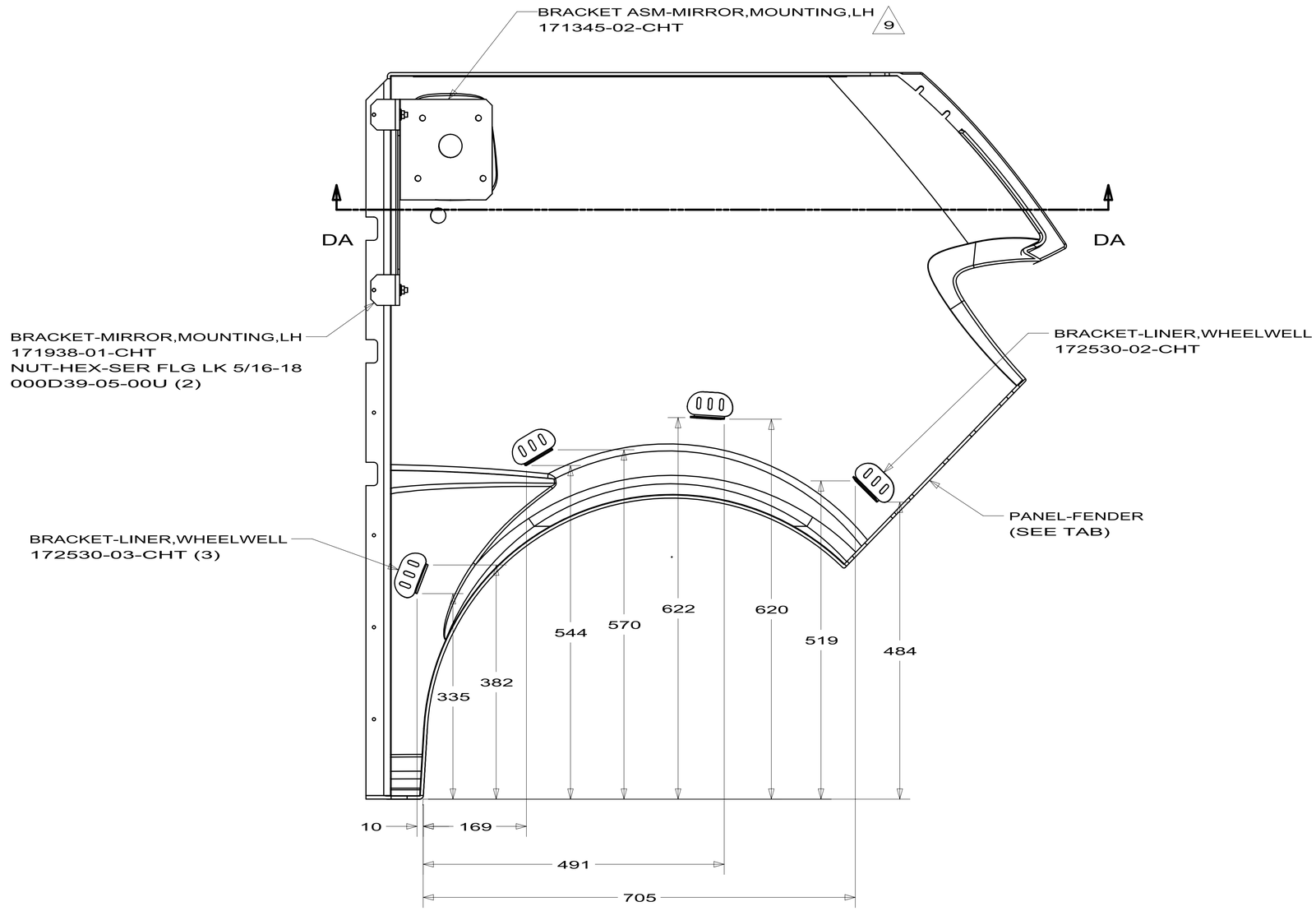

169164-04

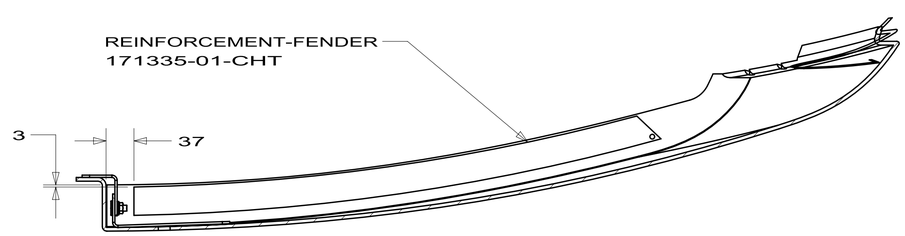

SECTION DA-DA

FIRST USED	10 H-SERIES
	DO NOT SCALE DRAWING
TITLE:	PANEL-FENDER
SHEET 4	PART NO 169164 REV

RELEASE	REV A	DATE	DWG NO 170852

REV	ZONE	REVISION RECORD	DATE	DFTR-ORIG

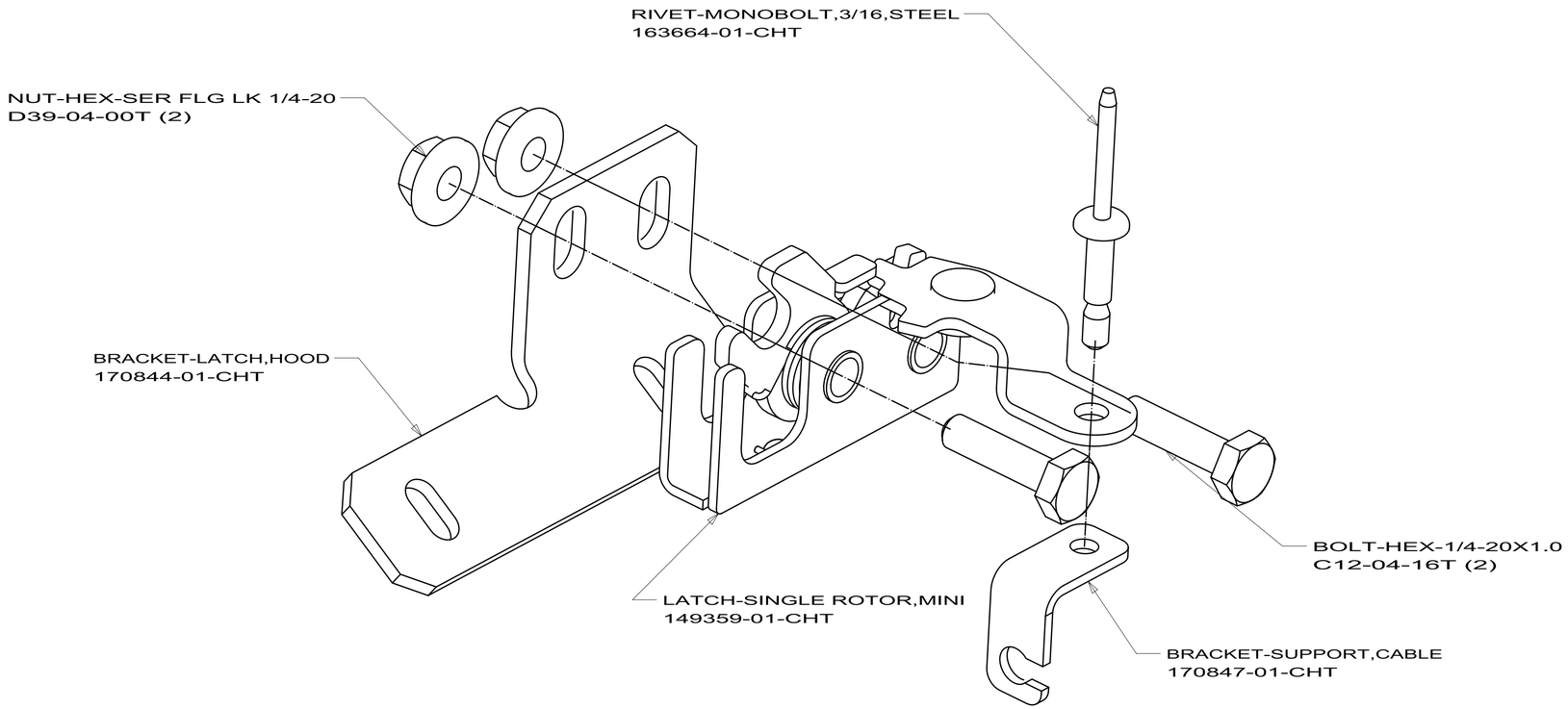

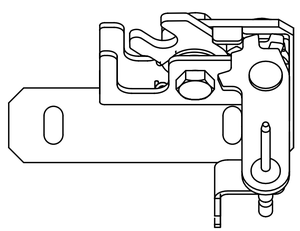

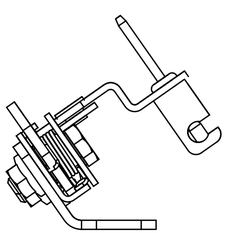

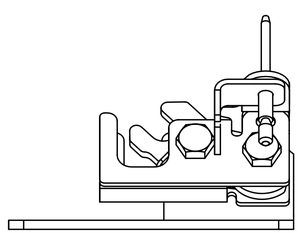

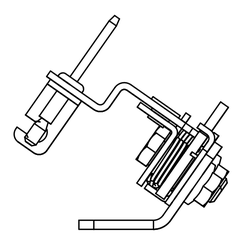

SEE CHART

FOR COLOR VARIATIONS OF THIS PART

COPYRIGHT 2009
WINNEBAGO
INDUSTRIES, INC.

DFTR	ORIG. DATE
CHKR	ALL DIMENSIONS ARE IN MILLIMETERS
P.E.	
M.E.	FIRST USED
DSNR	10 H-SERIES

UNSPECIFIED TOLERANCES ARE:

WHOLE DIM (X)	:	3
ONE-PLACE (X.X)	:	1.5
TWO-PLACE (X.XX)	:	0.50
ANGLE	:	1°

MATERIAL:

THIRD ANGLE PROJECTION

WEIGHT (LBS): .80

DO NOT SCALE DRAWING

TITLE:
BRACKET ASM-LATCH,HOOD,LOWER

SHEET 1 OF 1 | PART NO 170852 | REV

REF: 1

RELEASE	REV A	DATE	DWG NO 171759

REV	ZONE	REVISION RECORD	DATE	DFTR-ORIG

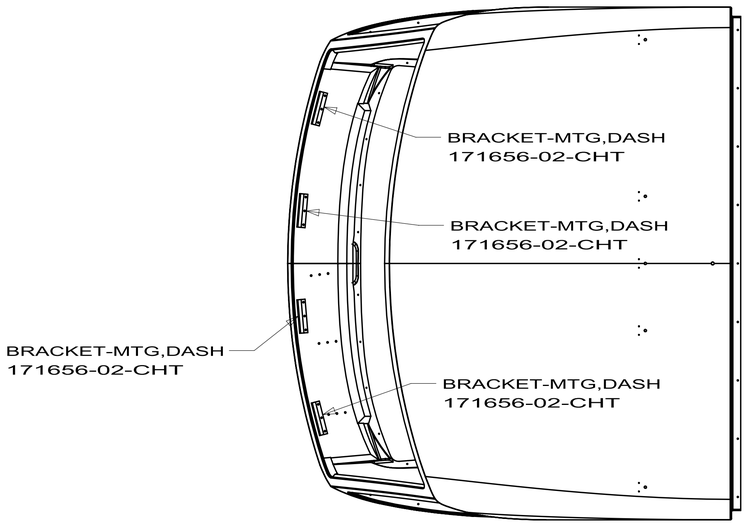

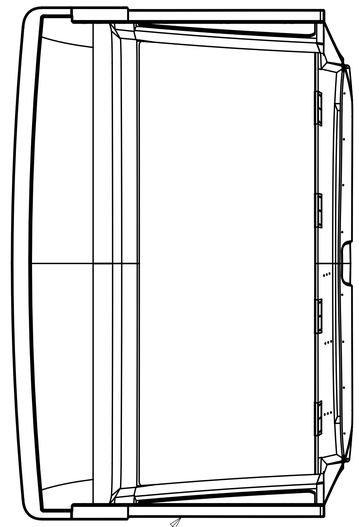

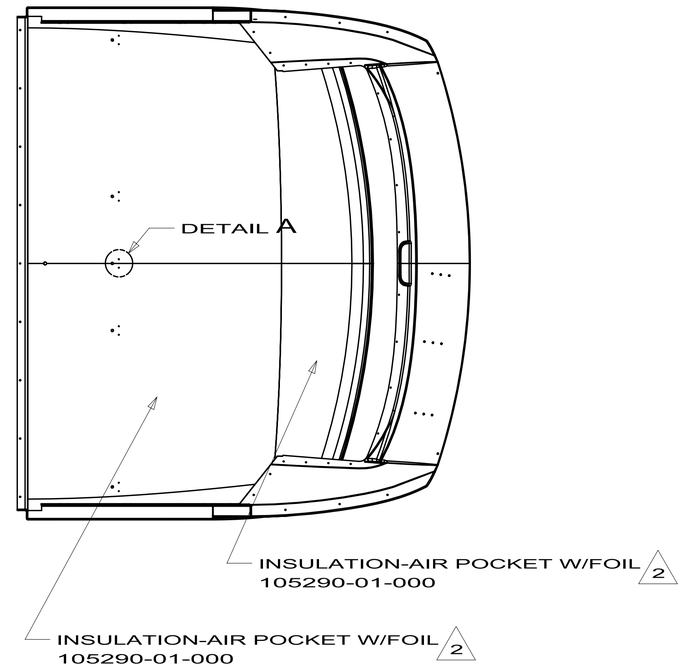

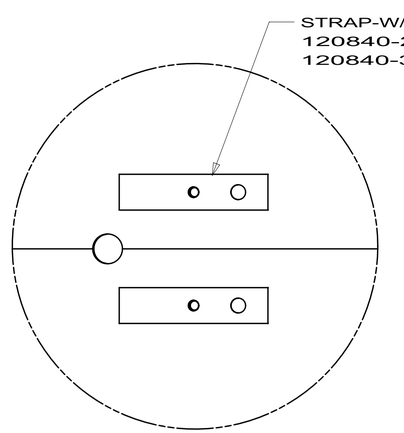

DETAIL A
5 PLCS
(INSULATION NOT SHOWN)

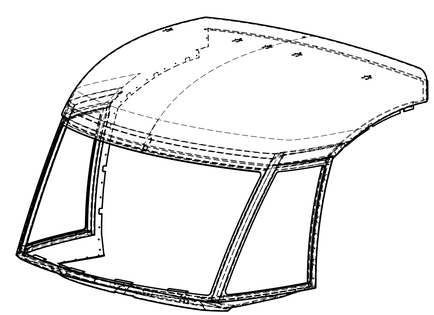

3 NOZZLE-BOYONET 112902-05-000
1 PER UNIT

2 USE ADHESIVE-SILAPRENE DC-12786, 4006-09-000 FOR BONDING PARTS.

1. USE ADHESIVE-SIKA CARTRIDGE, 112481-09-000 FOR BONDING PARTS.

NOTES:

SEE CHART
FOR COLOR VARIATIONS OF THIS PART

WINNEBAGO INDUSTRIES

COPYRIGHT 2009
WINNEBAGO
INDUSTRIES, INC.

DFTR	ORIG. DATE
CHKR	ALL DIMENSIONS ARE IN MILLIMETERS
P.E.	
M.E.	FIRST USED
DSNR	10 H-SERIES

UNSPECIFIED TOLERANCES ARE:
WHOLE DIM (X) : 3
ONE-PLACE (X.X) : 1.5
TWO-PLACE (X.XX) : 0.50
ANGLE : 1°

MATERIAL:
FIBERGLASS
ES0020

THIRD ANGLE PROJECTION

WEIGHT (LBS): 135.2

DO NOT SCALE DRAWING

TITLE:
PANEL ASM-FRONT

SHEET 1 OF 1 | PART NO 171759 | REV

REF:

RELEASE	REV A	DATE	DWG NO 172578

REV	ZONE	REVISION RECORD	DATE	DFTR-ORIG

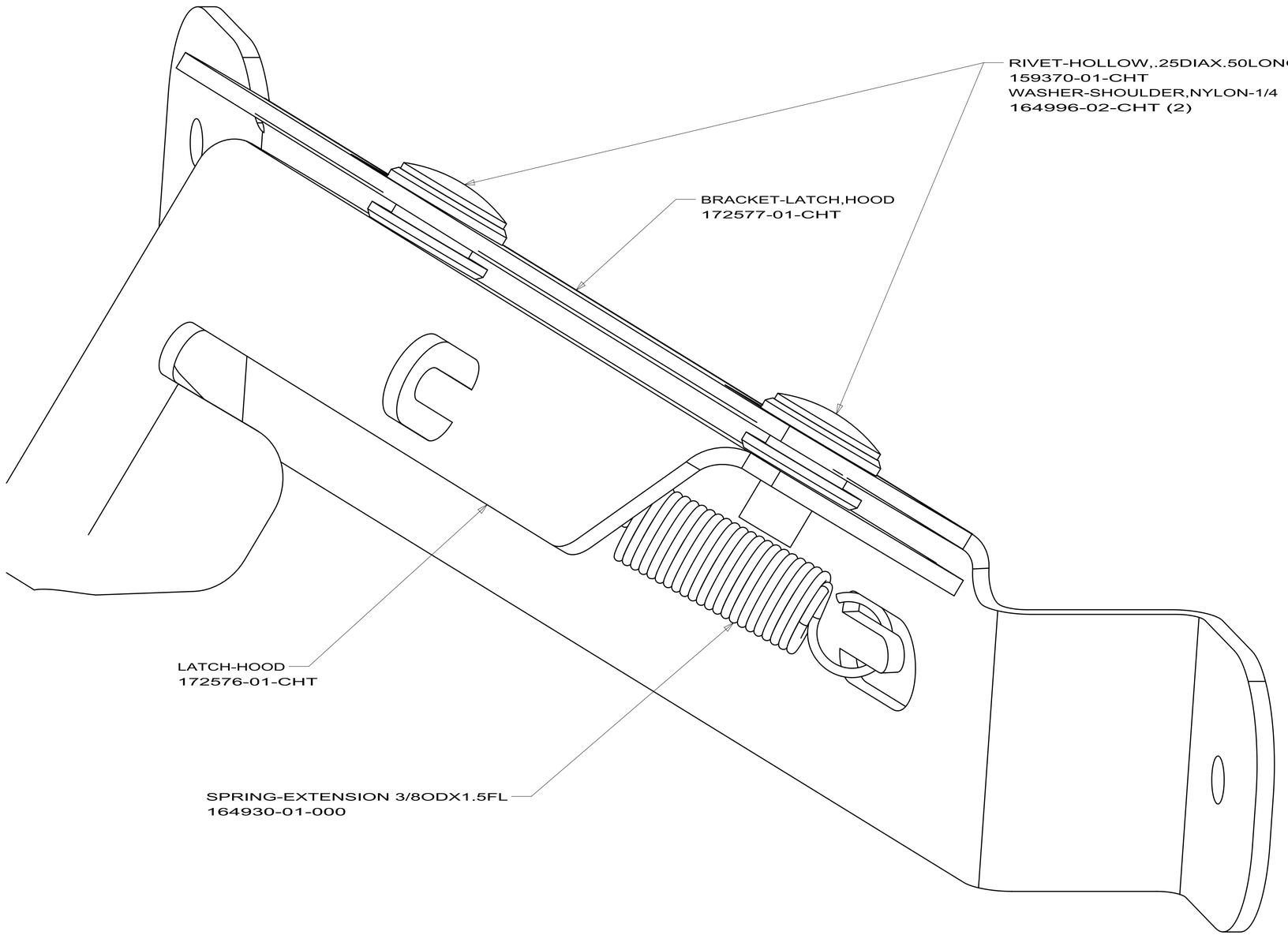

NOTES:

2. CLEAN AND FINISH PER ESOO51, CLASS A500.

1. REMOVE ALL BURRS AND SHARP EDGES.

COPYRIGHT 2009
WINNEBAGO
INDUSTRIES, INC.

DFTR	ORIG. DATE
CHKR	ALL DIMENSIONS ARE IN MILLIMETERS
P.E.	
M.E.	FIRST USED
DSNR	10 H--SERIES

UNSPECIFIED TOLERANCES ARE:

WHOLE DIM (X)	:	3
ONE-PLACE (X.X)	:	1.5
TWO-PLACE (X.XX)	:	0.50
ANGLE	:	1°

MATERIAL:

THIRD ANGLE PROJECTION

WEIGHT (LBS): .6

DO NOT SCALE DRAWING

TITLE:

LATCH ASM-HOOD

SHEET 1 OF 1	PART NO 172578	REV

REF:

DWG NO 174706

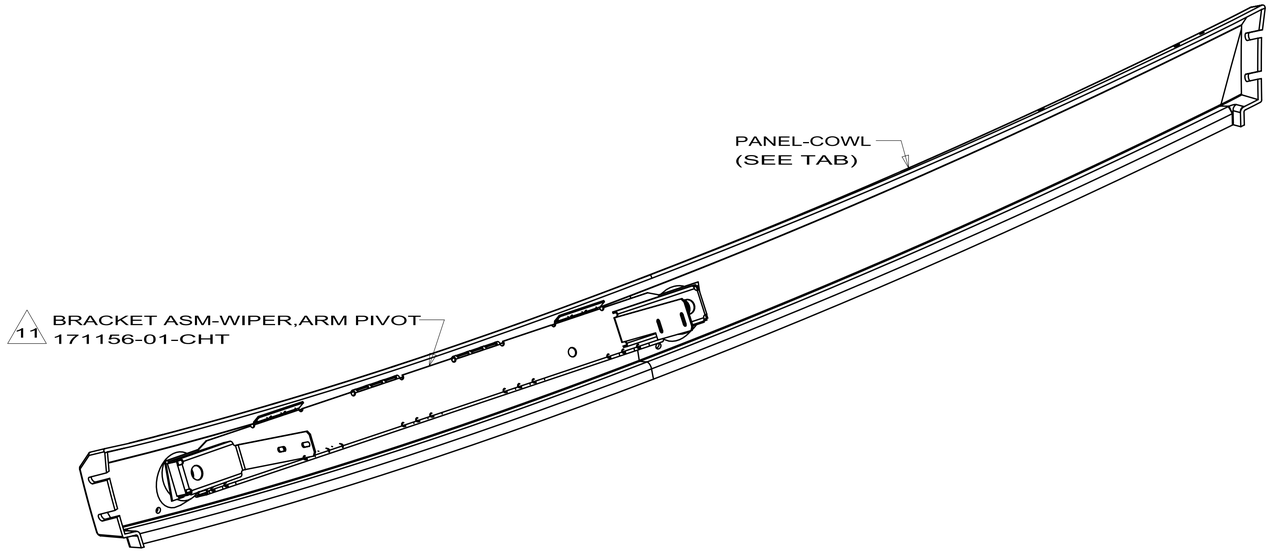

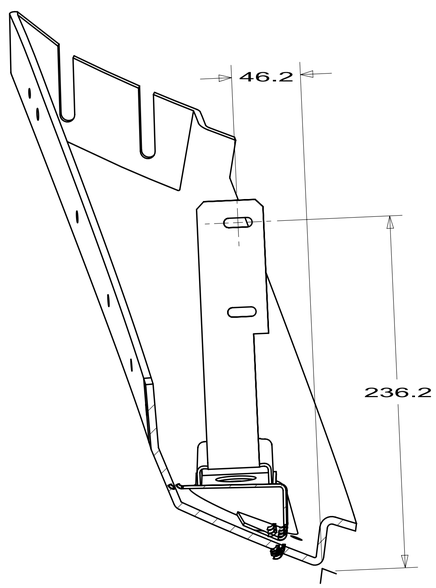

SECTION BB-BB

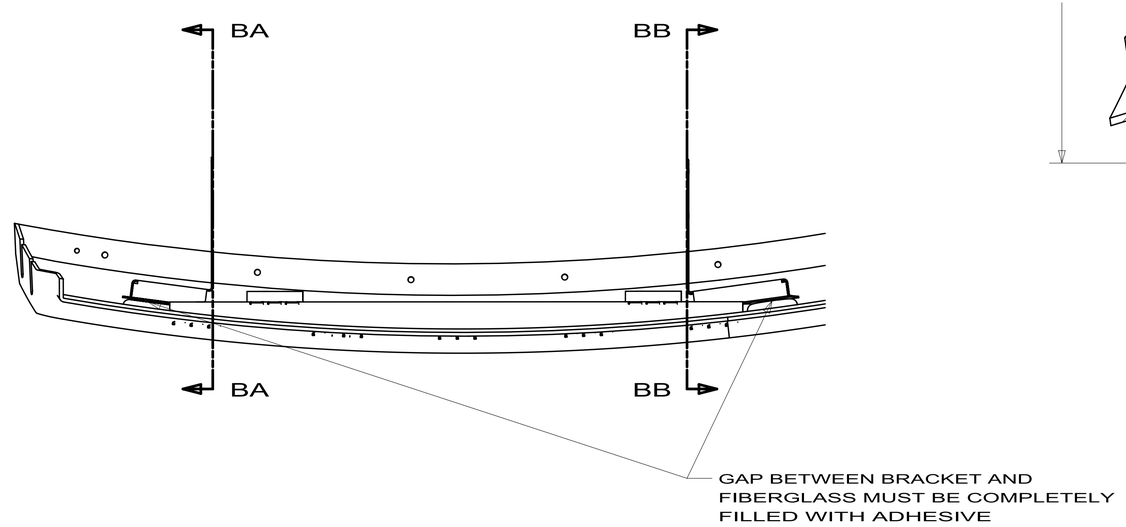

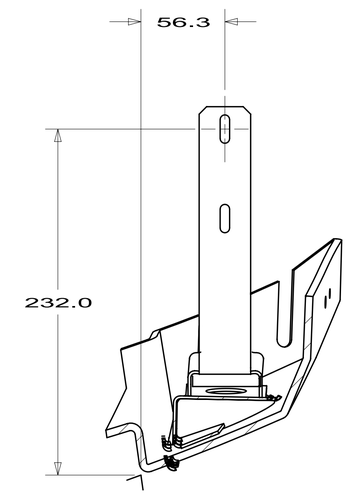

SECTION BA-BA

174706-02

FIRST USED	10 H-SERIES
	DO NOT SCALE DRAWING
TITLE:	PANEL-COWL
SHEET 2	PART NO 174706 REV

DWG NO	UNIT
171331-01	H25T
171331-02	H25R

RELEASE	REV A	DATE 09--16--08	DWG NO 171331
REV	ZONE	REVISION RECORD	DATE / DFTR.ORIG

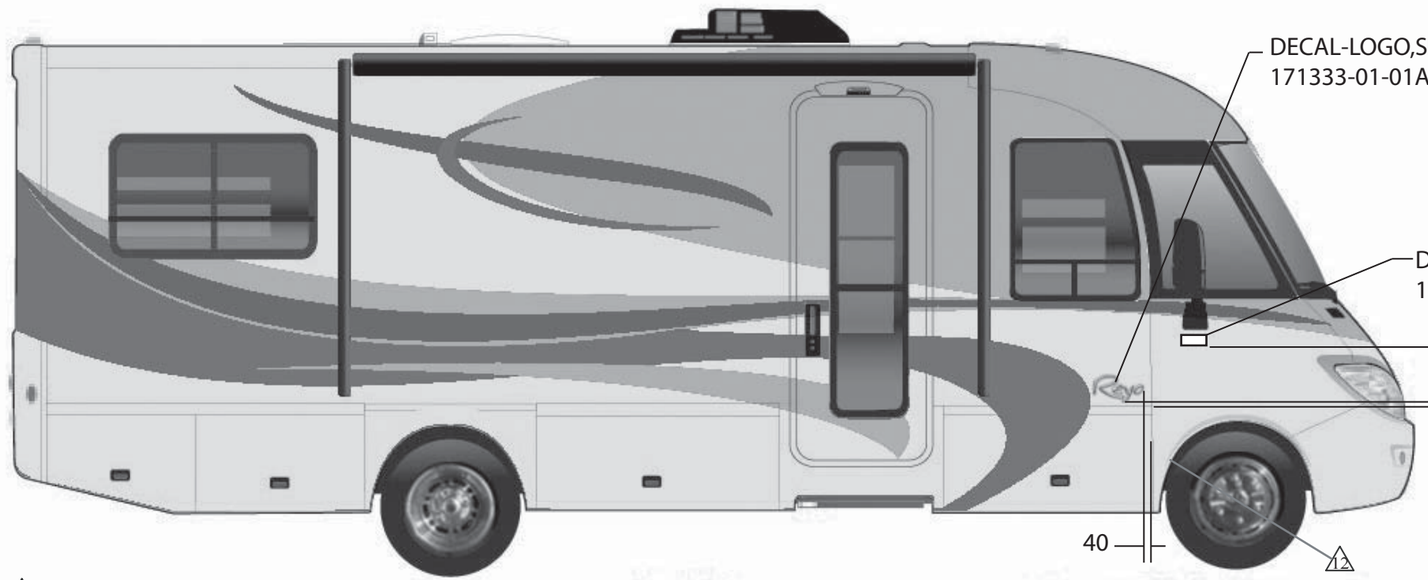

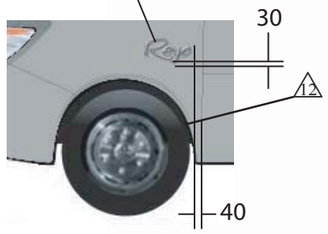

DRIVER'S SIDE

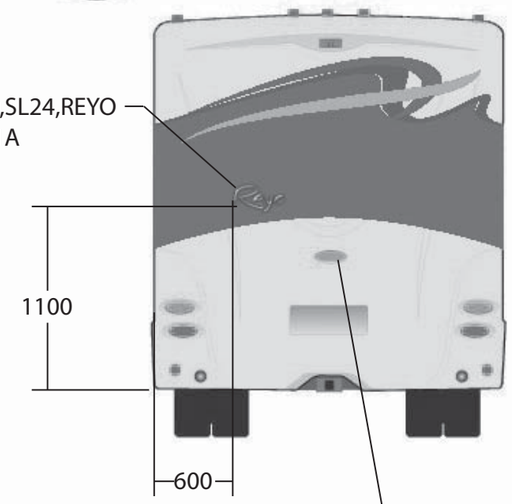

12 DIE CUT ACRYLIC FILM TO PROTECT PAINT BEHIND WHEEL (KIT-PAINT PROTECT 174672-01-000(RH) & 174672-02-000(LH).

11 REYO LOGO LOCATED FORWARD OF FEATURE TRIM ON DRIVER'S SIDE.

10 CENTER UNDER MIRROR BASE.

9. PASSENGER SIDE OF UNIT SHOWN, DRIVER'S SIDE OPPOSITE.

8. END PANELS OF SLIDEOUT ROOMS WILL BE PAINTED WITH BASECOAT AND CLEAR COAT ONLY. THERE WILL BE NO COLORED DESIGN GRAPHIC ELEMENTS PAINTED ON THE END PANELS.

7. APPLY SEALER BODY SEAM CLEAR 94401-04-000 TO HELP SECURE EDGES.

6. USE 174664-01-000 (100 FT) TO COVER UNSEALED ROOF SEAMS.

5. DIE CUT ACRYLIC FILM TO PROTECT UNIT (KIT-PAINT PROTECTION 170888-02-000).

4. CLEAR COAT TO BE APPLIED ON ENTIRE UNIT TO PROTECT PAINT.

3. TOLERANCE FOR DIMENSIONS IS +/- 20mm.
LOGO IS TO BE +/- 1mm ON A HORIZONTAL PLANE (END TO END).

2. APPLY FILM-URETHANE PROTECTANT 109506-01-000 AT BOTTOM OF ENTRANCE DOOR TO PREVENT SCUFFMARKS.

1. APPLY PROTECTOR 116424-01-000 TO WATER HEATER DOOR LATCH.

NOTES:

(24P) MASK FRONT EXT PROTECTIVE
(27A) EXT FULL BODY PAINT PKG #1
(92A) EXT FULL BODY PAINT PKG # 2
(24C) EXT FULL BODY PAINT PKG # 3

WINNEBAGO INDUSTRIES

COPYRIGHT 2009
WINNEBAGO
INDUSTRIES, INC.

ORIG. DATE 07/30/08
FIRST USED 10 H REYO
MATERIAL:

SPECIFICATION PRINT
DO NOT SCALE

TITLE: GRAPHICS INSTALLATION

SHEET 1 OF 2 | PART NO 171331 | REV

REF 1 08/25/09

DWG NO 171331

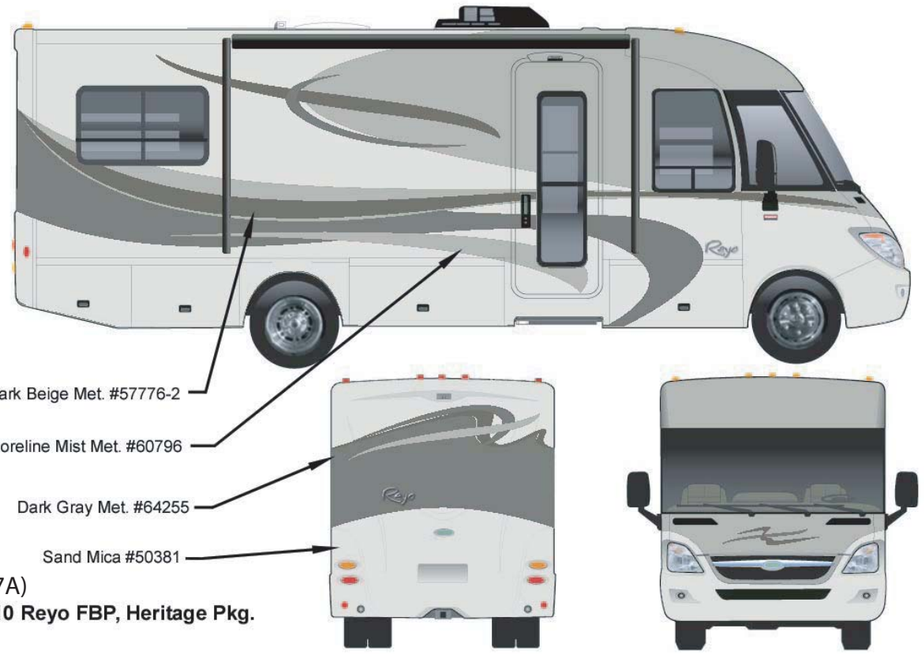

(27A)
2010 Reyo FBP, Heritage Pkg.

(92A)
2010 Reyo FBP, Bistro Pkg.

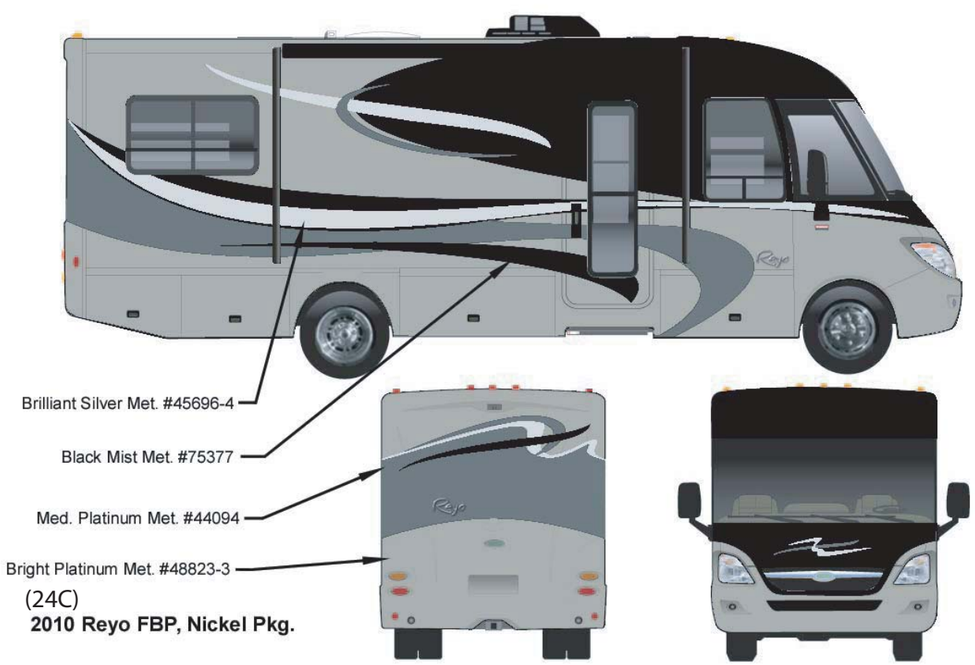

(24C)
2010 Reyo FBP, Nickel Pkg.

FIRST USED	2010 H SEIRES (REYO)
	SPECIFICATION PRINT DO NOT SCALE
TITLE:	GRAPHICS INSTALLATION
SHEET 2	PART NO 171331 REV

DWG NO	UNIT
170537-01	H25T
170537-03	H25R

RELEASE	REV A	DATE 08--07--08	DWG NO 170537
REV	ZONE	REVISION RECORD	DATE / DFTR.ORIG

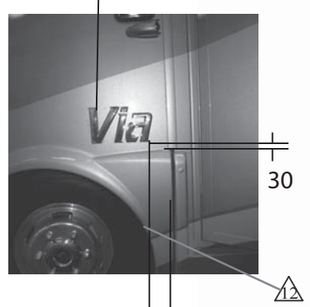

DECAL-LOGO,SL24,VIA
170541-01-01A

30

12

60

DRIVER'S SIDE

DECAL-LOGO,SL24,VIA
170541-01-01A

DECAL-LOGO,DOMED,WINNEBAGO 10
132664-02-01A (2)

300 (2)

30

40

12

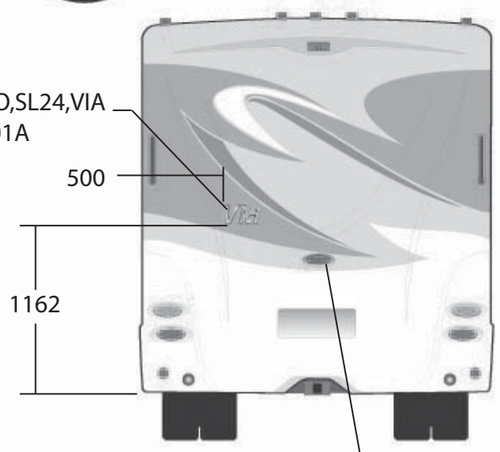

DECAL-LOGO,SL24,VIA
170541-01-01A

500

1162

DECAL/BEZEL-DOMED NAMEPLATE
151687-01-CHT

DECAL/BEZEL-DOMED NAMEPLATE
151687-01-CHT

DECAL-GRILLE BAR,SL24,RH
171522-01-01A

DECAL-GRILLE BAR,SL24,LH
171522-02-01A

(24P) MASK FRONT EXT PROTECTIVE
(27A) EXT FULL BODY PAINT PKG #1
(92A) EXT FULL BODY PAINT PKG # 2
(24C) EXT FULL BODY PAINT PKG # 3

NOTES:

12 DIE CUT ACRYLIC FILM TO PROTECT PAINT BEHIND WHEEL (KIT-PAINT PROTECT 174672-01-000(RH) & 174672-02-000(LH).

11 VIA LOGO LOCATED FORWARD OF FEATURE TRIM ON DRIVER'S SIDE.

10 CENTER UNDER MIRROR BASE.

9. PASSENGER SIDE OF UNIT SHOWN, DRIVER'S SIDE OPPOSITE.

8. END PANELS OF SLIDEOUT ROOMS WILL BE PAINTED WITH BASECOAT AND CLEAR COAT ONLY. THERE WILL BE NO COLORED DESIGN GRAPHIC ELEMENTS PAINTED ON THE END PANELS.

7. APPLY SEALER BODY SEAM CLEAR 94401-04-000 TO HELP SECURE EDGES.

6. USE 145487-02-000 (100 FT) TO COVER UNSEALED ROOF SEAMS.

5. DIE CUT ACRYLIC FILM TO PROTECT UNIT (KIT-PAINT PROTECTION 170888-01-000).

4. CLEAR COAT TO BE APPLIED ON ENTIRE UNIT TO PROTECT PAINT.

3. TOLERANCE FOR DIMENSIONS IS +/- 20mm.
LOGO IS TO BE +/- 1mm ON A HORIZONTAL PLANE (END TO END).

2. APPLY FILM-URETHANE PROTECTANT 109506-01-000 AT BOTTOM OF ENTRANCE DOOR TO PREVENT SCUFFMARKS.

1. APPLY PROTECTOR 116424-01-000 TO WATER HEATER DOOR LATCH.

WINNEBAGO INDUSTRIES

COPYRIGHT 2009
WINNEBAGO
INDUSTRIES, INC.

ORIG. DATE 07/30/08
FIRST USED 10 H SER VIA
MATERIAL:

SPECIFICATION PRINT
DO NOT SCALE

TITLE: GRAPHICS INSTALLATION

SHEET 1 OF 2 | PART NO 170537 | REV

REF 08/25/09

DWG NO 170537

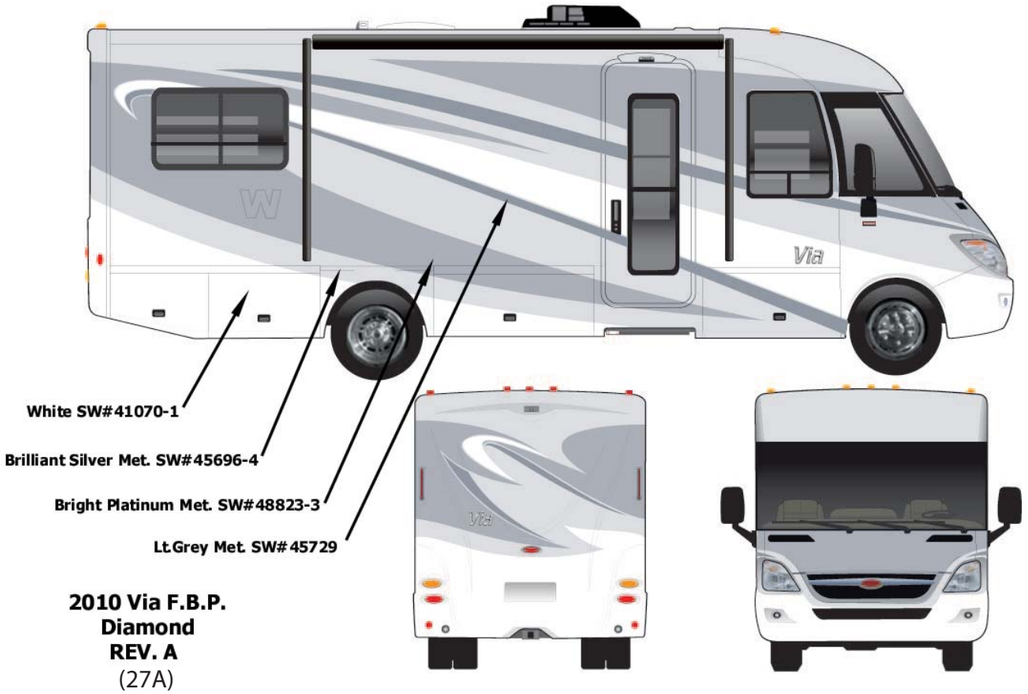

2010 Via F.B.P.
Diamond
REV. A
(27A)

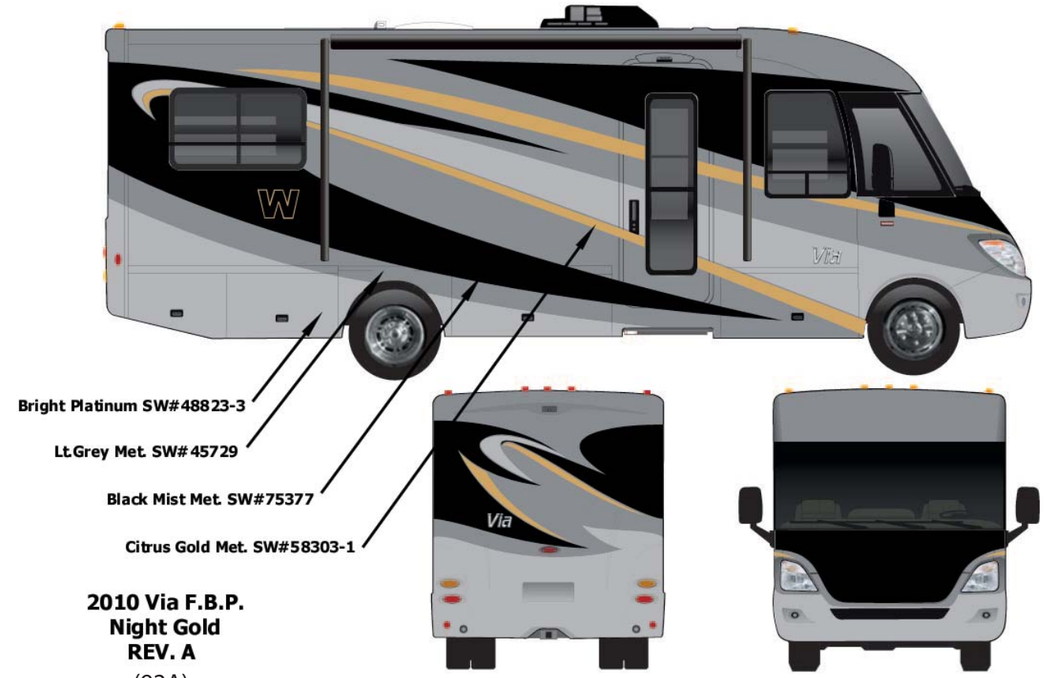

2010 Via F.B.P.
Night Gold
REV. A
(92A)

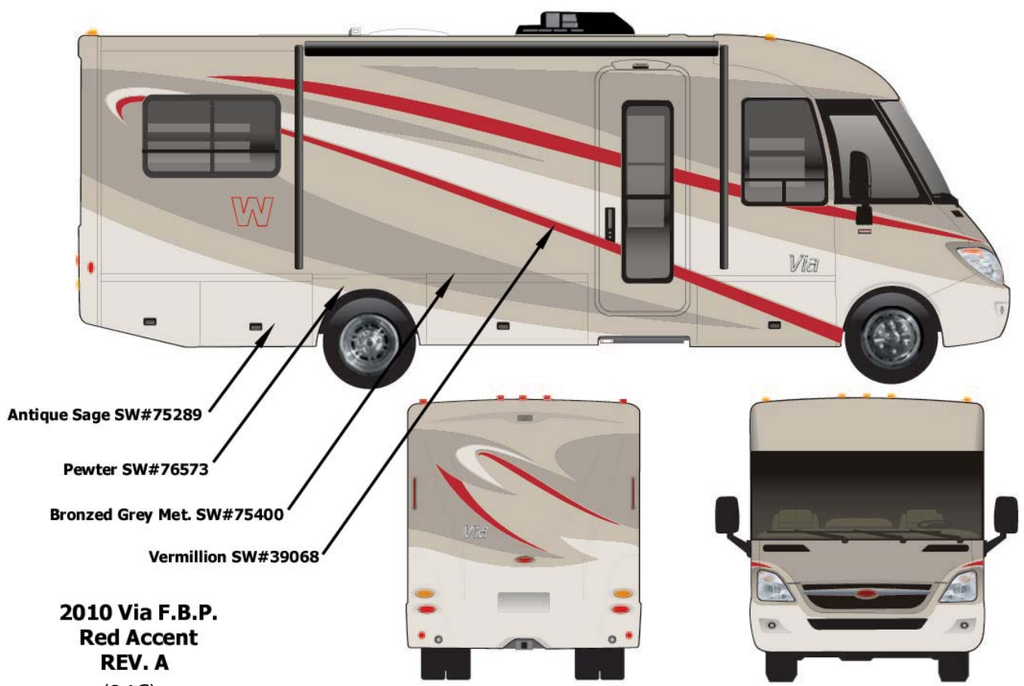

2010 Via F.B.P.
Red Accent
REV. A
(24C)

FIRST USED	2010 H SEIRES (VIA)
	SPECIFICATION PRINT DO NOT SCALE
TITLE:	GRAPHICS INSTALLATION
SHEET 2	PART NO 170537 REV

RELEASE	REV A	DATE	DWG NO 169756

REV	ZONE	REVISION RECORD	DATE	DFTR-ORIG

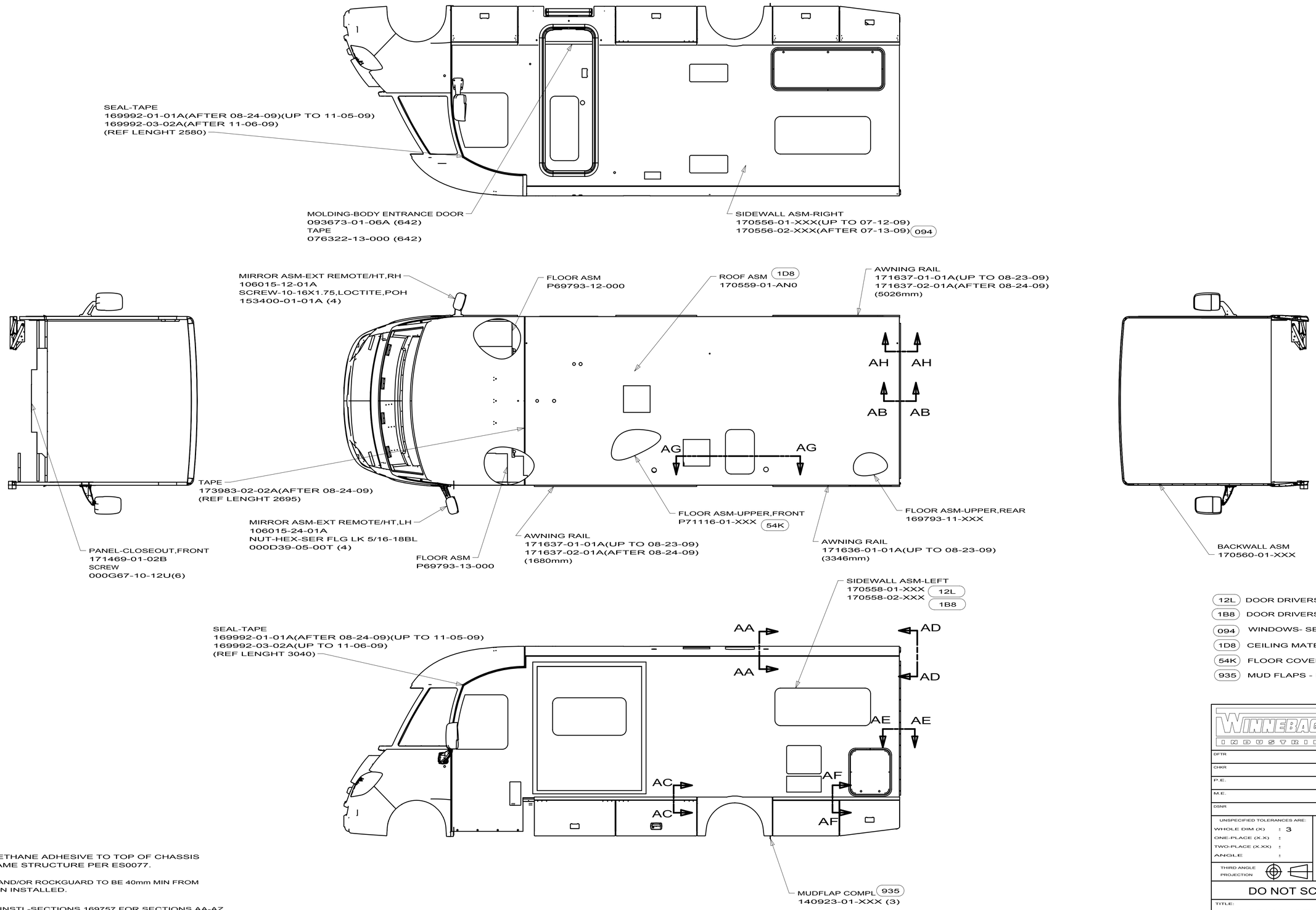

12L DOOR DRIVERS CAB ENTRY
1B8 DOOR DRIVERS,WITHOUT
094 WINDOWS- SE-GI
1D8 CEILING MATERIAL-VINYL ON FOAM
54K FLOOR COVERING - VINYL
935 MUD FLAPS - REAR

NOTES:

3. APPLY URETHANE ADHESIVE TO TOP OF CHASSIS FLOOR FRAME STRUCTURE PER ES0077.

2. MUDFLAPS AND/OR ROCKGUARD TO BE 40mm MIN FROM TIRES WHEN INSTALLED.

1. SEE BODY INSTL-SECTIONS 169757 FOR SECTIONS AA-AZ.

WINNEBAGO INDUSTRIES
COPYRIGHT 2009
WINNEBAGO
INDUSTRIES, INC.

DFTR	ORIG. DATE
CHKR	ALL DIMENSIONS ARE IN MILLIMETERS
P.E.	
M.E.	FIRST USED
DSNR	10 H25T

UNSPECIFIED TOLERANCES ARE:
WHOLE DIM (X) : 3
ONE-PLACE (X.X) :
TWO-PLACE (X.XX) :
ANGLE :

MATERIAL:

THIRD ANGLE PROJECTION

DO NOT SCALE DRAWING

TITLE:
BODY INSTL-PANEL & TRIM

SHEET 1 OF 1	PART NO 169756	REV

REF:

11/11/2009

106015-12-01A

KEY	PART NUMBER	U/M	DESCRIPTION	VENDOR NO.
	106015-12-700	EA	MIRROR-FLAT-W/W/O HEAT	709448
	106015-12-701	EA	MIRROR-CONVEX - W/W/O HEAT	709449
	106015-12-702	EA	CAP/SCREW - (PKG OF 4) - BLK	748329 RND
	106015-12-703	EA	CONVEX GLASS/HANDSET/HOUSING	7095892
	106015-19-701	EA	GLASS/FLAT-W/BEZEL/HEAT/ANTI	709644
	119774-09-700	EA	PLATE-INNER SUPT/MIRROR HEAD	709418-7RH
	131431-01-701	EA	MOTOR	7475400

106015-13-01A

KEY	PART NUMBER	U/M	DESCRIPTION	VENDOR NO.
	106015-12-700	EA	MIRROR-FLAT-W/W/O HEAT	709448
	106015-12-701	EA	MIRROR-CONVEX - W/W/O HEAT	709449
	106015-12-702	EA	CAP/SCREW - (PKG OF 4) - BLK	748329 RND
	106015-12-703	EA	CONVEX GLASS/HANDSET/HOUSING	7095892
	106015-19-701	EA	GLASS/FLAT-W/BEZEL/HEAT/ANTI	709644
	119774-09-701	EA	PLATE INNER SUPT/MIRROR HEAD	709419-7LH
	131431-01-701	EA	MOTOR	7475400

106015-14-01A

KEY	PART NUMBER	U/M	DESCRIPTION	VENDOR NO.
	106015-12-700	EA	MIRROR-FLAT-W/W/O HEAT	709448
	106015-12-701	EA	MIRROR-CONVEX - W/W/O HEAT	709449
	106015-12-702	EA	CAP/SCREW - (PKG OF 4) - BLK	748329 RND
	106015-12-703	EA	CONVEX GLASS/HANDSET/HOUSING	7095892
	106015-19-701	EA	GLASS/FLAT-W/BEZEL/HEAT/ANTI	709644
	119774-09-700	EA	PLATE-INNER SUPT/MIRROR HEAD	709418-7RH

106015-15-01A

KEY	PART NUMBER	U/M	DESCRIPTION	VENDOR NO.
	106015-12-700	EA	MIRROR-FLAT-W/W/O HEAT	709448
	106015-12-701	EA	MIRROR-CONVEX - W/W/O HEAT	709449
	106015-12-702	EA	CAP/SCREW - (PKG OF 4) - BLK	748329 RND
	106015-12-703	EA	CONVEX GLASS/HANDSET/HOUSING	7095892
	106015-19-701	EA	GLASS/FLAT-W/BEZEL/HEAT/ANTI	709644
	119774-09-701	EA	PLATE INNER SUPT/MIRROR HEAD	709419-7LH

106015-18-01A, 106015-19-01A

KEY	PART NUMBER	U/M	DESCRIPTION	VENDOR NO.
	106015-12-702	EA	CAP/SCREW - (PKG OF 4) - BLK	748329 RND
	106015-16-700	EA	GLASS-FLAT W/HEAT ELEMENT	709450
	106015-18-700	EA	GLASS/CONVEX-KIT W/CLIP	709650
	106015-18-701	EA	ACTUATOR - CONVEX GLASS	7475410
	106015-18-702	EA	MOTOR - FLAT GLASS	7471180
	106015-18-703	EA	CONVEX REBUILT KIT	709651
	106015-19-700	EA	VIBRATION KIT - MIRROR GLASS, VELVAC	709645

COPYRIGHT © 2009 WINNEBAGO INDUSTRIES INC.

REV	ZONE	REVISION RECORD	DATE	DFTR-ORIG
		REV DATE	DWG NO 140923	

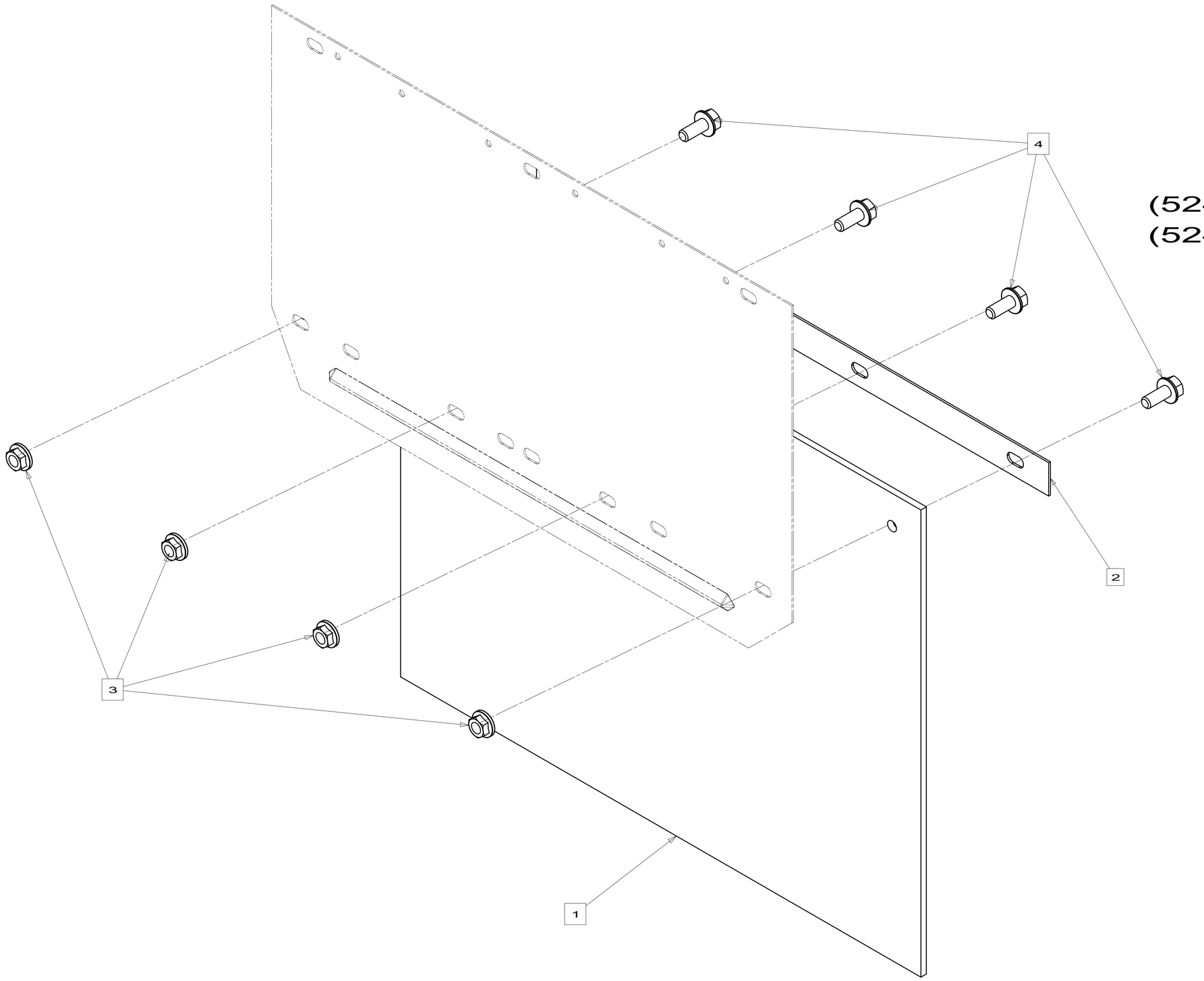

140923-01
331C
500-SERIES
(524A PASSENGER)
(524K PASSENGER)
700-SERIES
D-SERIES
E-SERIES
H SERIES
J SERIES

ITEM	PART NUMBER	DESCRIPTION	QTY
4	000C260512U	BOLT	4
3	000D390500U	NUT	4
2	14092201CHT	PLATE-MUDFLAP	1
1	01751601000	MUD FLAP-BLACK	1

WINNEBAGO INDUSTRIES

COPYRIGHT 2010
WINNEBAGO
INDUSTRIES, INC.

DFTR | ORIG. DATE
CHKR
P.E.
M.E.
DSNR

ALL DIMENSIONS ARE IN MILLIMETERS

FIRST USED
02 MOTORHOMES

UNSPECIFIED TOLERANCES ARE:
WHOLE DIM (X) ±
ONE-PLACE (X.X) ±
TWO-PLACE (X.XX) ±
ANGLE ±

MATERIAL:

THIRD ANGLE PROJECTION

DO NOT SCALE DRAWING

TITLE:
MUD FLAP COMPL

SHEET 1 OF 5 | PART NO 140923 | REV

REF: 1

2/16/2010

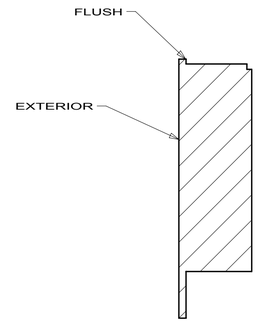

SECTION GA-GA

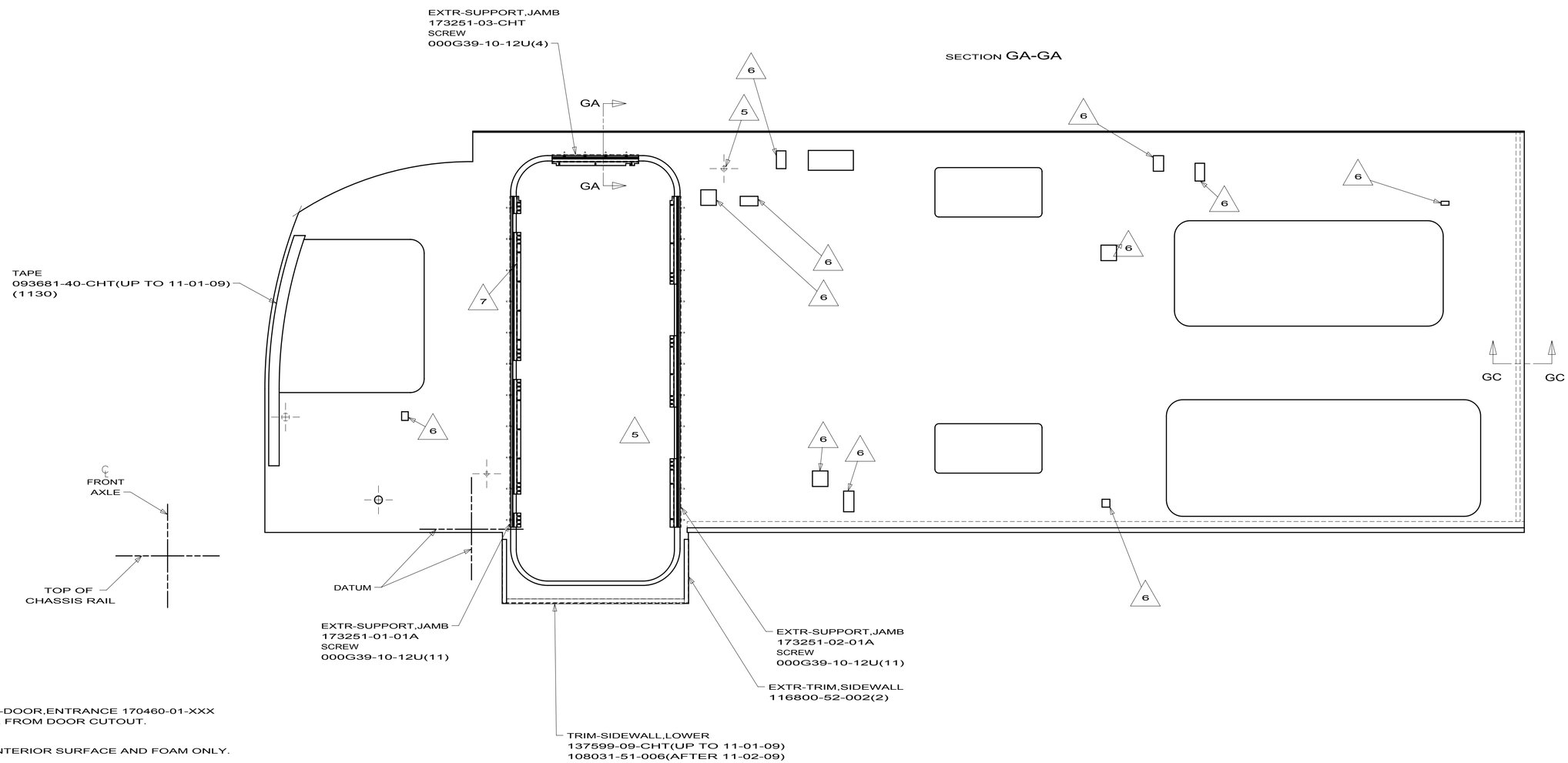

7. INSERT-DOOR,ENTRANCE 170460-01-XXX IS MADE FROM DOOR CUTOUT.

6. THRU INTERIOR SURFACE AND FOAM ONLY.

5. THRU EXTERIOR SURFACE AND FOAM ONLY.

4. CUTOUT THRU INNER PANELING ONLY.

3. ALL RADII 9.5 UNLESS OTHERWISE SPECIFIED.

2. PANEL SHOWN FROM INTERIOR SIDE.

1. TOLERANCE FOR CUTOUT ± 1.5.

NOTES:

10 H25T

NOTICE

CHANGES TO THIS SHEET
MAY AFFECT OTHERS

SIDEWALL ASM-RIGHT

1 170556

11/4/2009

RELEASE	REV A	DATE	DWG NO 169769
REV	ZONE	REVISION RECORD	DATE / DFTR-ORIG

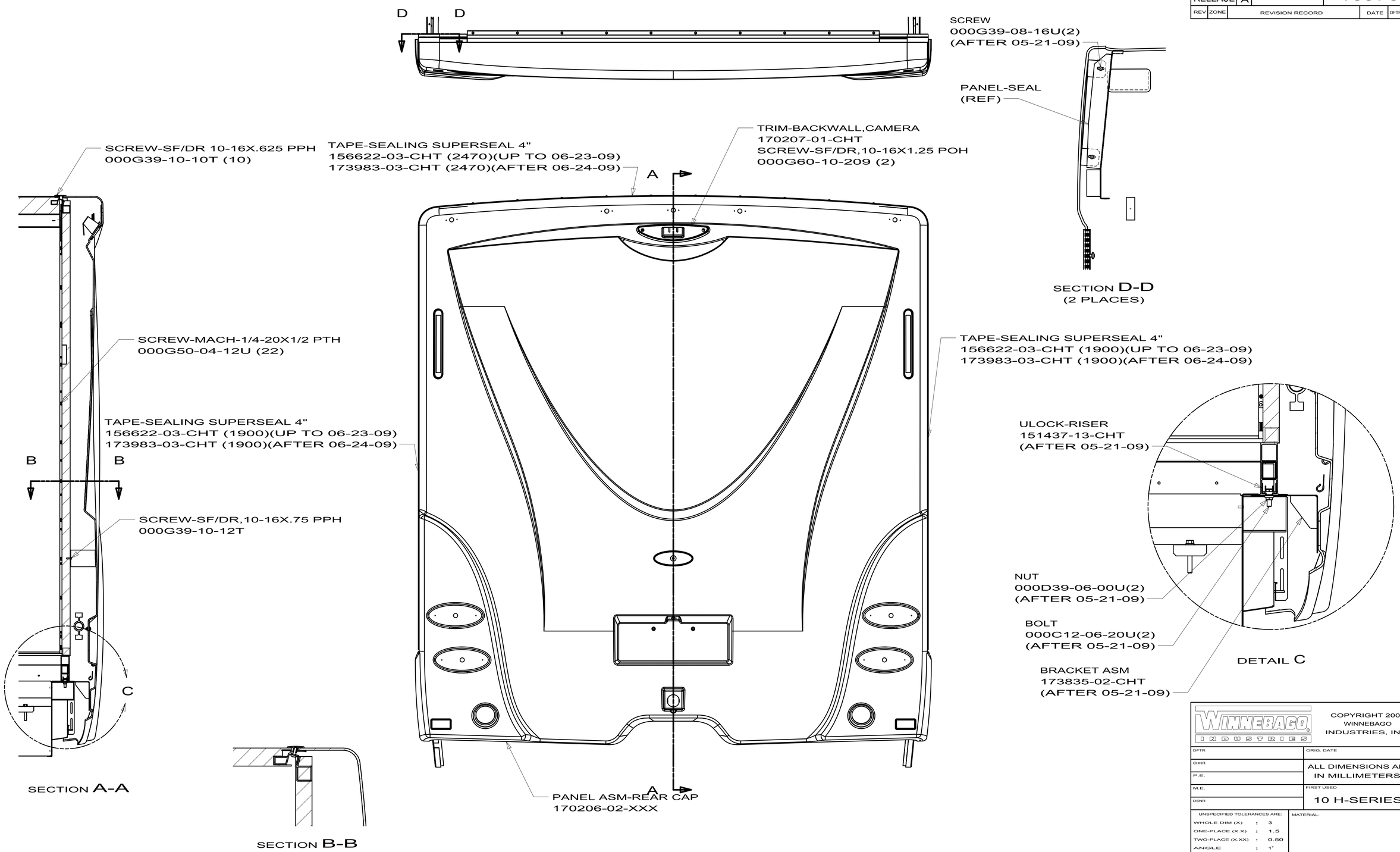

WINNEBAGO INDUSTRIES

COPYRIGHT 2009
WINNEBAGO
INDUSTRIES, INC.

DFTR	ORIG. DATE
CHKR	ALL DIMENSIONS ARE IN MILLIMETERS
P.E.	
M.E.	FIRST USED
DSNR	10 H-SERIES

UNSPECIFIED TOLERANCES ARE:

WHOLE DIM (X)	:	3
ONE-PLACE (X.X)	:	1.5
TWO-PLACE (X.XX)	:	0.50
ANGLE	:	1°

MATERIAL:

THIRD ANGLE PROJECTION

WEIGHT (LBS): 109.6

DO NOT SCALE DRAWING

TITLE:

REAR CAP INSTL

SHEET 1 OF 1	PART NO 169769	REV

REF: 1

DWG NO 170206

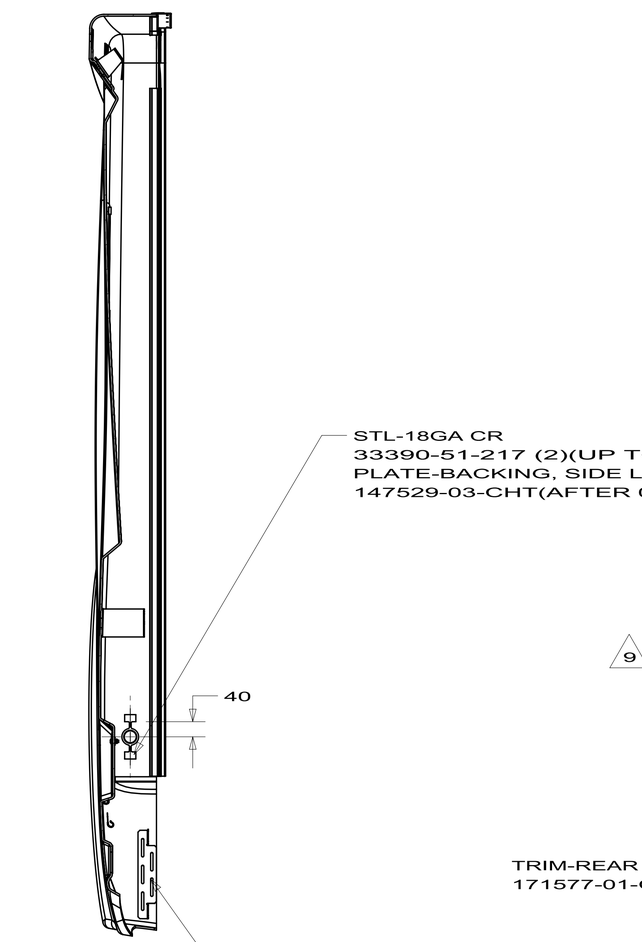

SECTION AB-AB
SECTION BA-BA
LH SHOWN
(RH OPPOSITE)

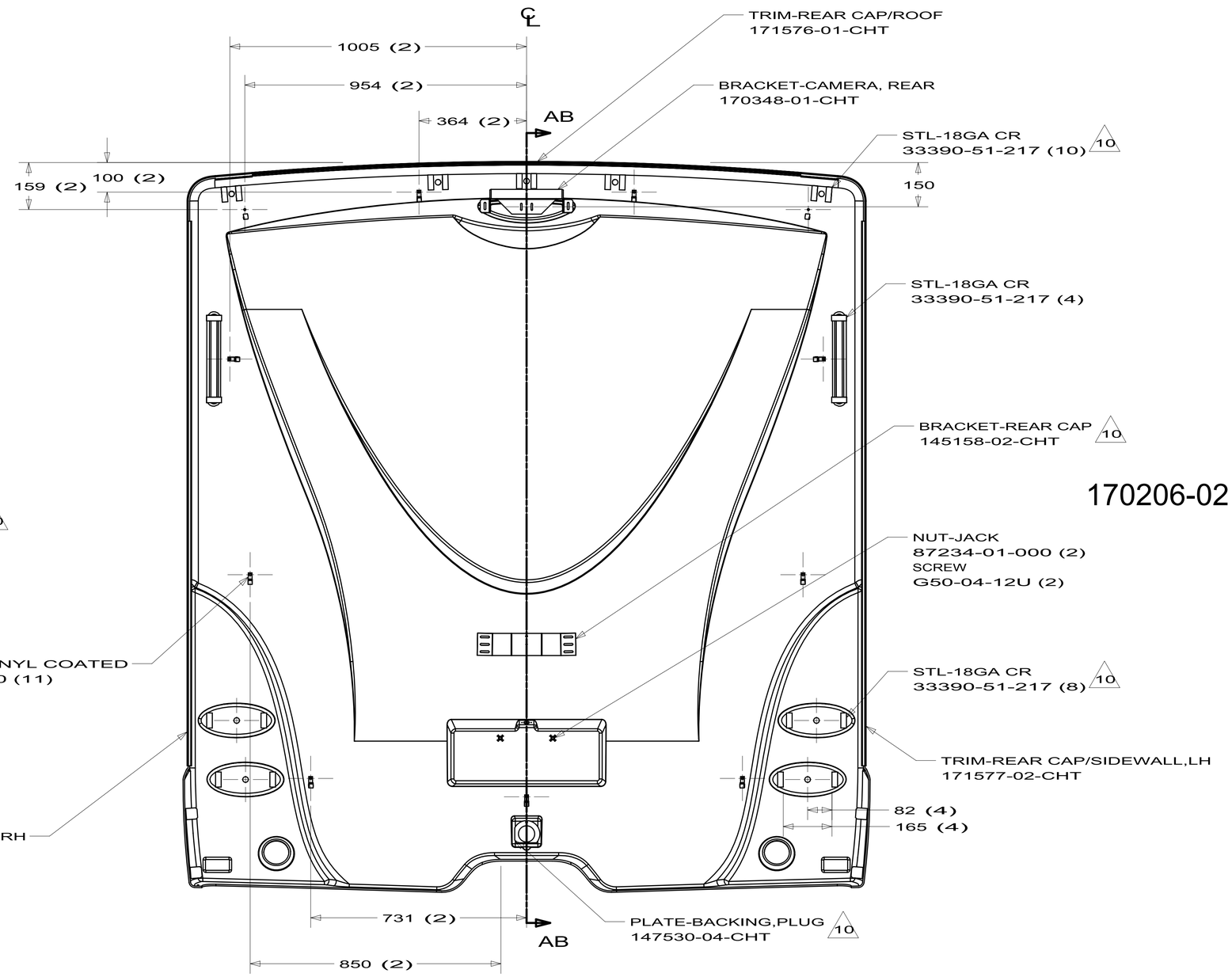

FIRST USED	10 H-SERIES
	DO NOT SCALE DRAWING
TITLE:	PANEL ASM-REAR CAP
SHEET 2	PART NO 170206 REV

RELEASE	REV A	DATE	DWG NO 169770

REV	ZONE	REVISION RECORD	DATE	DFTR-ORIG

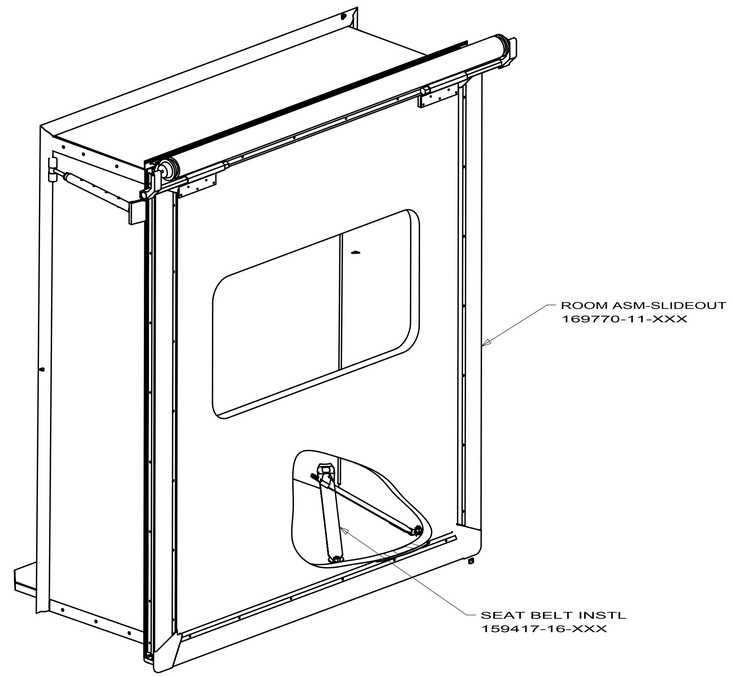

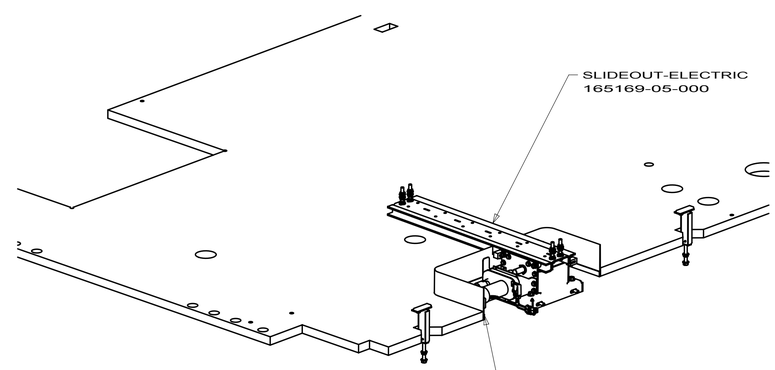

13. SECURE ONE OF THE SLIDEOUT ROOM ACTIVATION KEYS TO THE ROD-LOCK STRAP. KEYS ARE INCLUDED WITH SWITCH ASSEMBLY P/N 163097(REF).

12. TORQUE ALL BOLTS PER ES0018 UNLESS OTHERWISE SPECIFIED. (SEE TABLE BELOW)

SIZE	TORQUE VALUE (FT-LBS)
1/4 - 20 (.250)	76 (IN-LBS)
5/16 - 18 (.3125)	13 (FT-LBS)
3/8 - 16 (.375)	23 (FT-LBS)
7/16 - 14 (.4375)	37 (FT-LBS)
1/2 - 13 (.500)	57 (FT-LBS)

11. USE POLY-CLEAR 47034-07-000 AND ATTACH IT USING WASHER 44533-01-000 TO PROTECT THE SLIDEOUT FLOOR.

10. POSITION SEAL FLUSH WITH LOWER TRIM AND TIGHT AGAINST INNER TRIM.

9. SCREWS CANNOT BE REUSED. ANY TIME A SCREW IS REMOVED IT MUST BE DISCARDED AND REPLACED WITH A NEW SCREW TO INSURE THE THREADS SEAL.

8. USE SCREW G39-08-08S TO HOLD EACH END OF TRIM.

7. SEE SEALANT MANUAL.

6. LOOSEN BOLTS TO ALLOW ROOM TO MOVE SIDE TO SIDE ON THE MOUNTING BRACKETS UNTIL IT IS CENTERED IN THE OPENING. TIGHTEN AFTER ALL ADJUSTMENTS ARE COMPLETE.

5. ADJUST BOLT TO MOVE ROOM UP OR DOWN TO BE CENTERED IN THE SIDEWALL OPENING. TIGHTEN AFTER ALL ADJUSTMENTS ARE COMPLETE.

4. THIS IS A NOMINAL DIMENSION; THE PARTS SHOULD BE ADJUSTED AS REQUIRED FROM THERE.

3. THE RETRACTED LENGTH IS ADJUSTED UNTIL THE OUTSIDE TRIM OF THE ROOM SEALS AGAINST THE OUTSIDE OF THE SIDEWALL

2. THE EXTENDED LENGTH IS ADJUSTED UNTIL THE INSIDE TRIM OF THE ROOM SEALS AGAINST THE INSIDE OF THE SIDEWALL.

1. FOR ADDITIONAL INFORMATION SEE WIRE INSTALLATION FRONT END AND THE LEVELING JACK INSTALLATION DRAWINGS.

NOTES:

COPYRIGHT 2009
WINNEBAGO
INDUSTRIES, INC.

DFTR	ORIG. DATE
CHKR	ALL DIMENSIONS ARE IN MILLIMETERS
P.E.	
M.E.	FIRST USED
DSNR	10 H25T

UNSPECIFIED TOLERANCES ARE:
WHOLE DIM (X) : 3
ONE-PLACE (X.X) :
TWO-PLACE (X.XX) :
ANGLE :

MATERIAL:

THIRD ANGLE PROJECTION

DO NOT SCALE DRAWING

TITLE:
SLIDEOUT COMPL-FRONT,LH

SHEET 1 OF 4 | PART NO. 169770 | REV

REF:

1

10/9/2009

DWG NO 169770

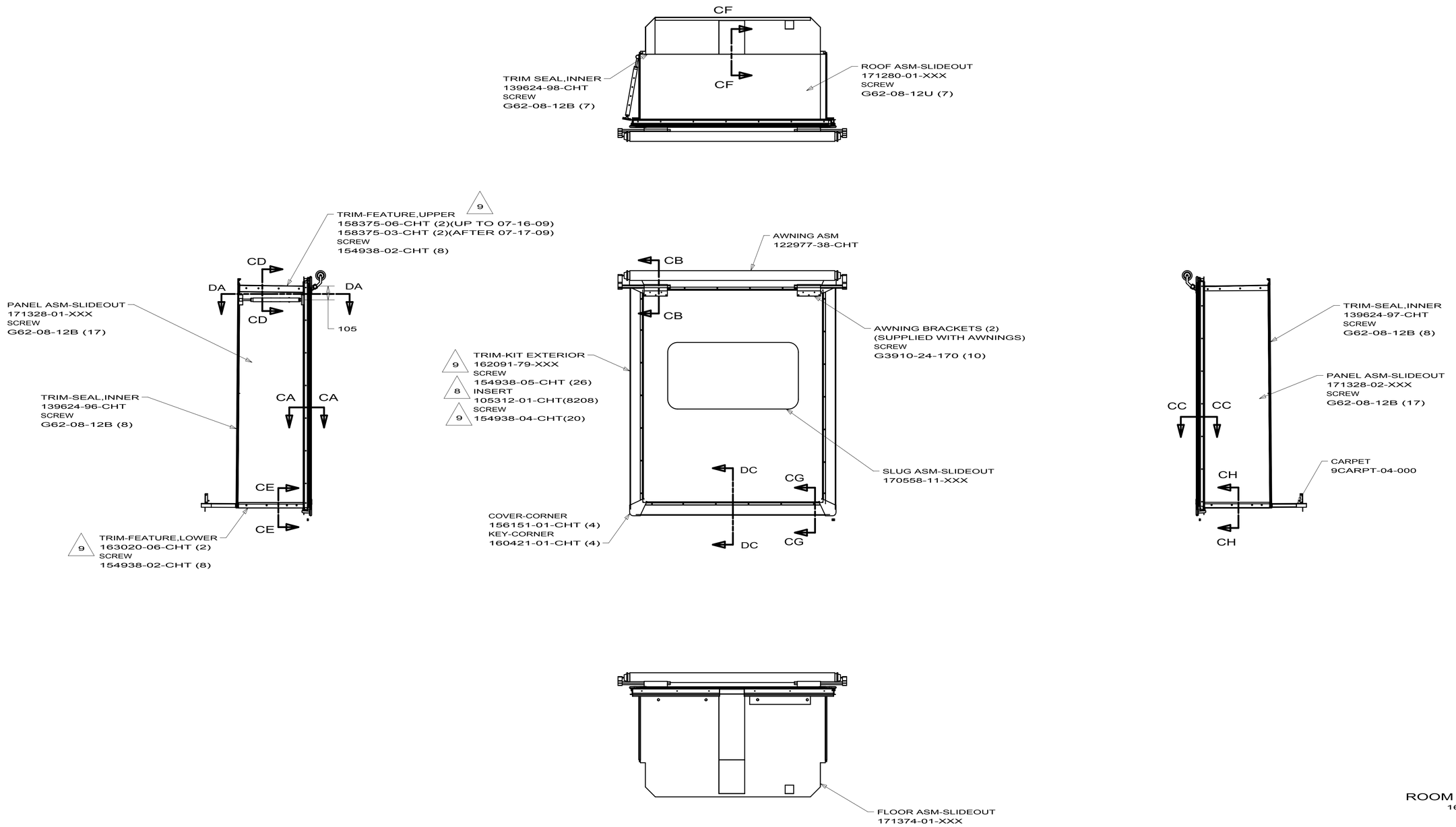

ROOM ASM-SLIDEOUT
169770-11-XXX

FIRST USED	10 H25T
	DO NOT SCALE DRAWING
TITLE:	SLIDEOUT COMPL-FRONT,LH
SHEET 2	PART NO 169770 REV

10/9/2009

DWG NO 169770

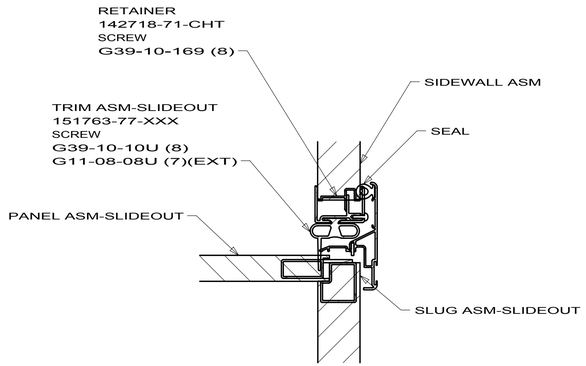

SECTION CA-CA

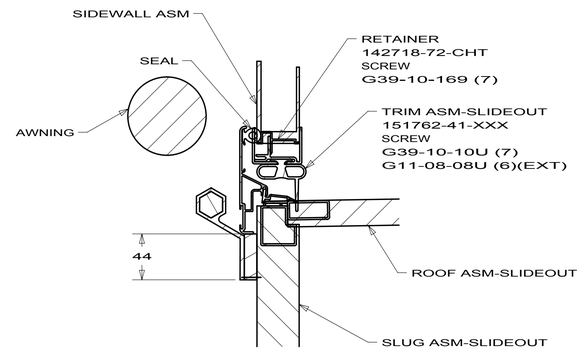

SECTION CB-CB

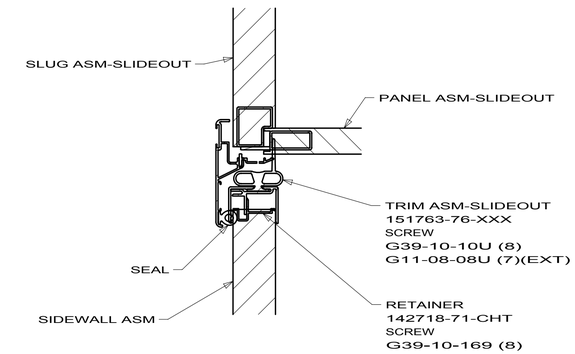

SECTION CC-CC

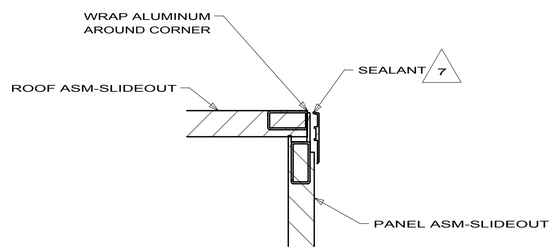

SECTION CD-CD

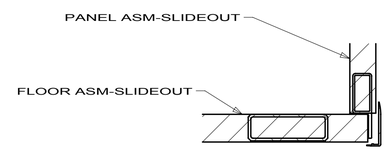

SECTION CE-CE

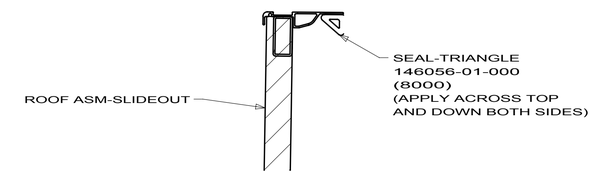

SECTION CF-CF

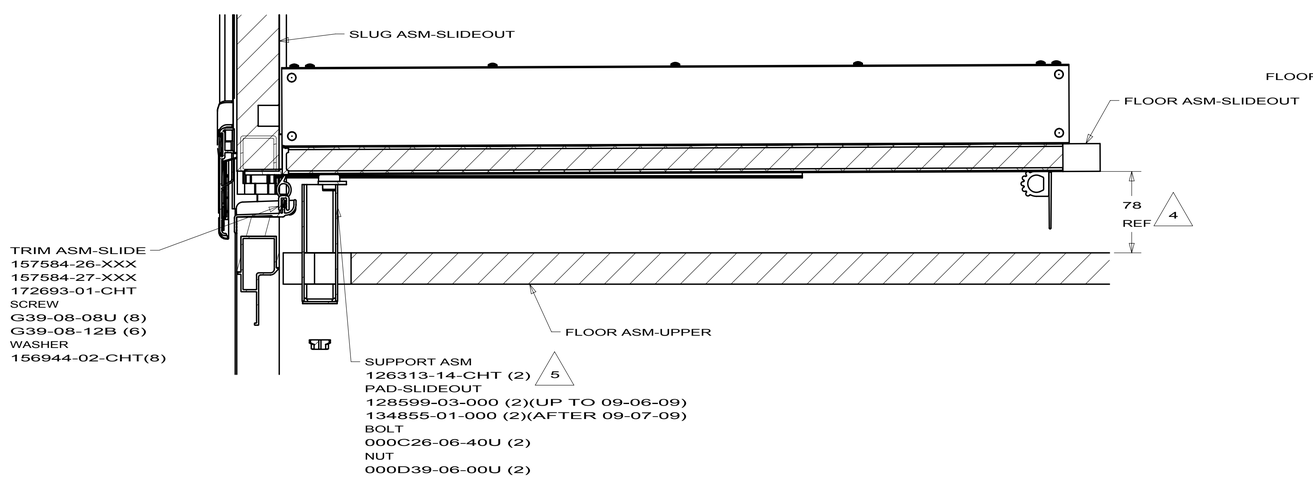

SECTION CG-CG

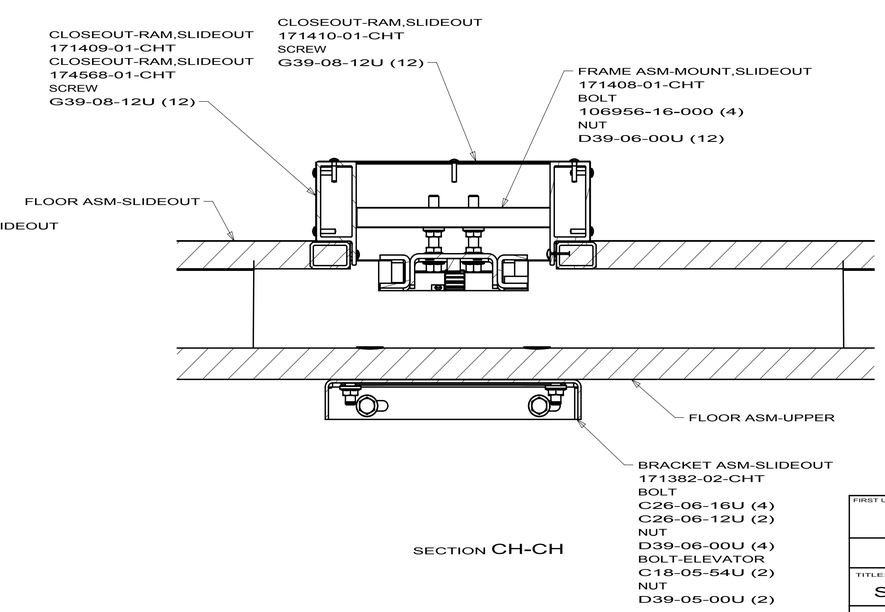

SECTION CH-CH

FIRST USED	10 H25T
	DO NOT SCALE DRAWING
TITLE:	SLIDEOUT COMPL-FRONT,LH
SHEET 3	PART NO 169770 REV

10/9/2009

DWG NO 169770

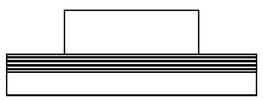

SEAL
107721-07-000
(335 MM)

SEAL
115075-04-000
(335 MM)

SECTION DF-DF
(SEAL DETAIL)

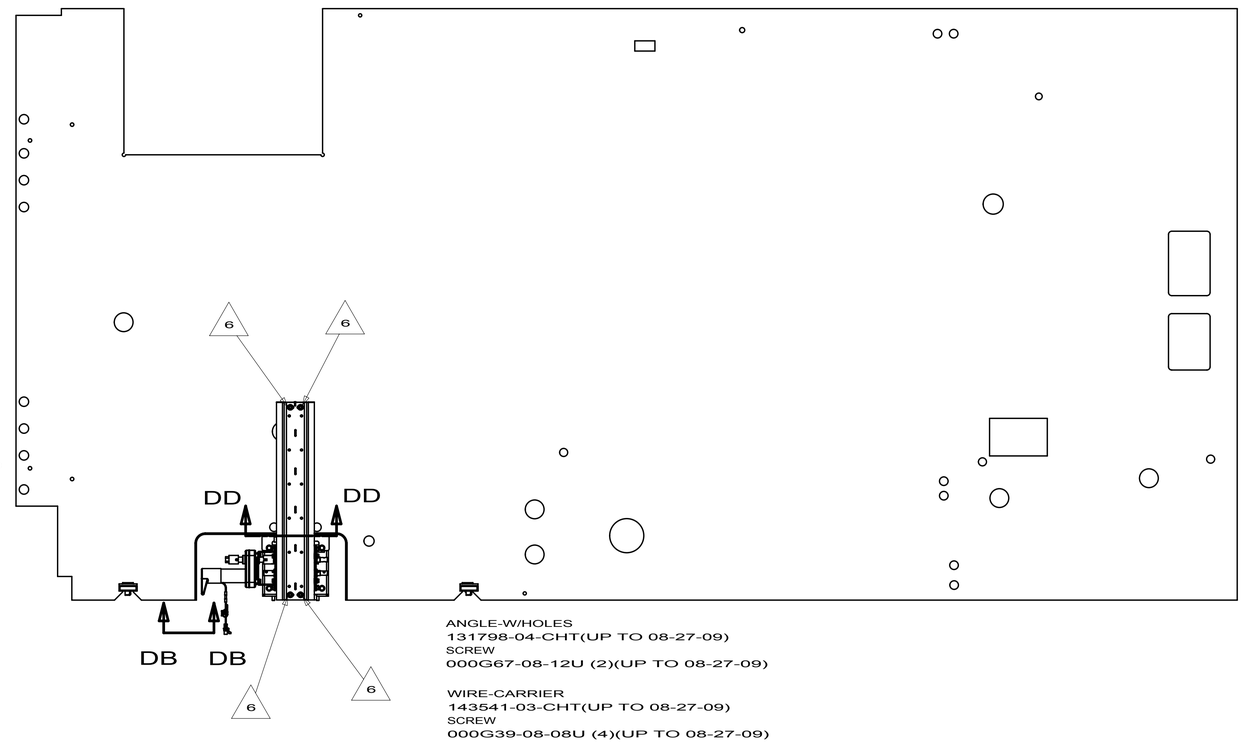

ANGLE-W/HOLES
131798-04-CHT(UP TO 08-27-09)
SCREW
000G67-08-12U (2)(UP TO 08-27-09)

WIRE-CARRIER
143541-03-CHT(UP TO 08-27-09)
SCREW
000G39-08-08U (4)(UP TO 08-27-09)

4

ANGLE-W/HOLES(UP TO 08-27-09)
131798-03-CHT
SCREW
000G39-08-12U (2)(UP TO 08-27-09)

SEAL TO BE NOTCHED
AROUND RAM

BRACKET-FORMED,SLIDEOUT
174149-01-CHT

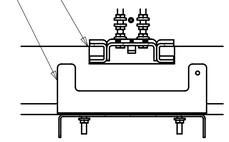

SECTION DD-DD

SEAL
115075-02-000(UP TO 05-21-09)
SCREW
000G39-08-12U(3)

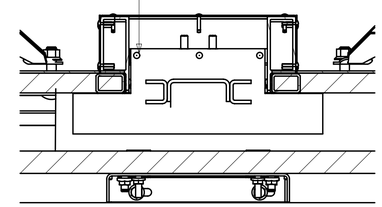

SECTION DE-DE

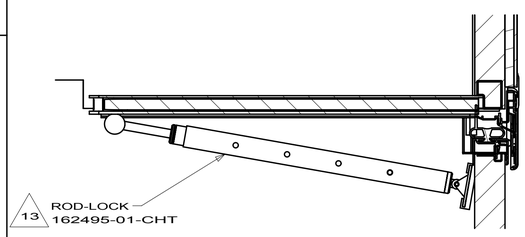

13 ROD-LOCK
162495-01-CHT

SECTION DA-DA

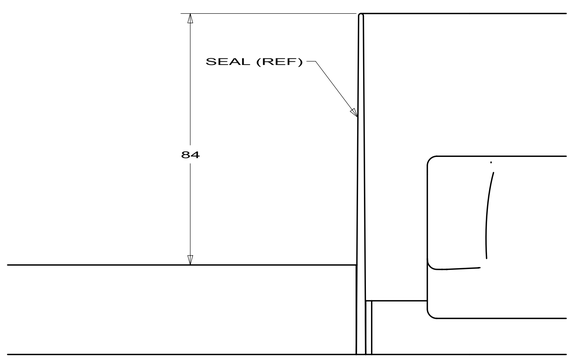

SECTION DB-DB

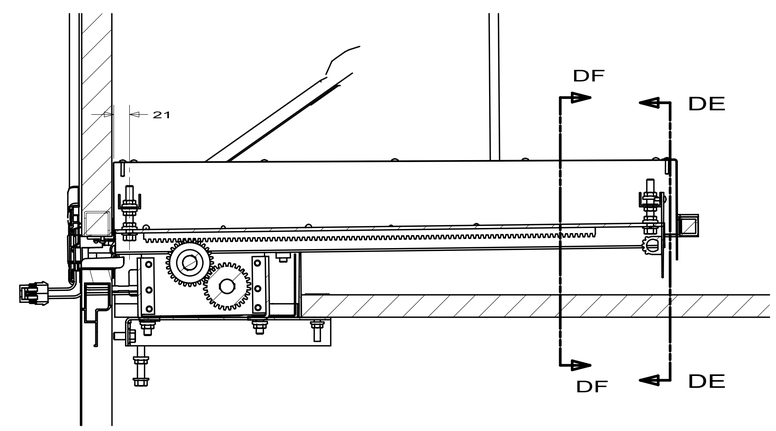

SECTION DC-DC

FIRST USED	10 H25T
	DO NOT SCALE DRAWING
TITLE:	SLIDEOUT COMPL-FRONT,LH
SHEET 4	PART NO 169770 REV

10/9/2009

DWG NO 151762

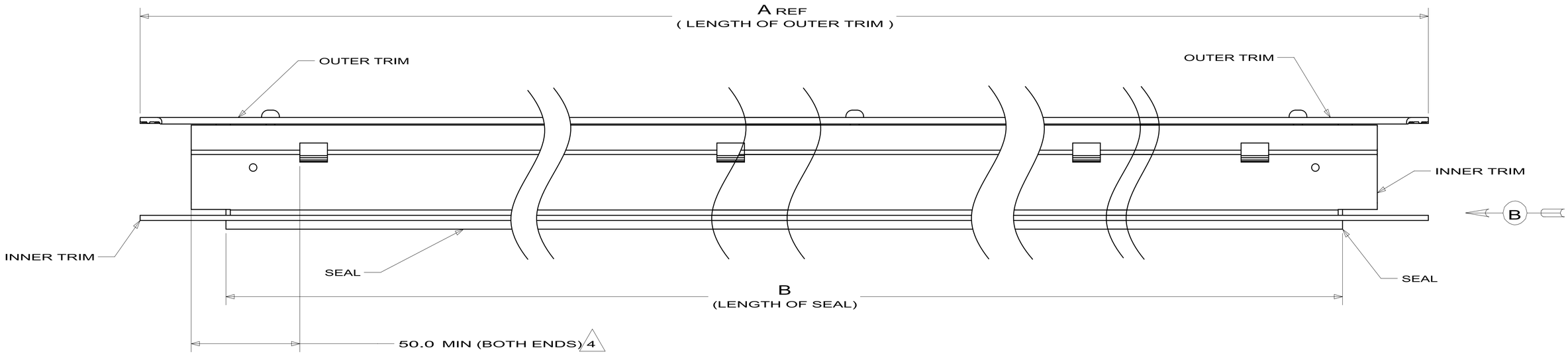

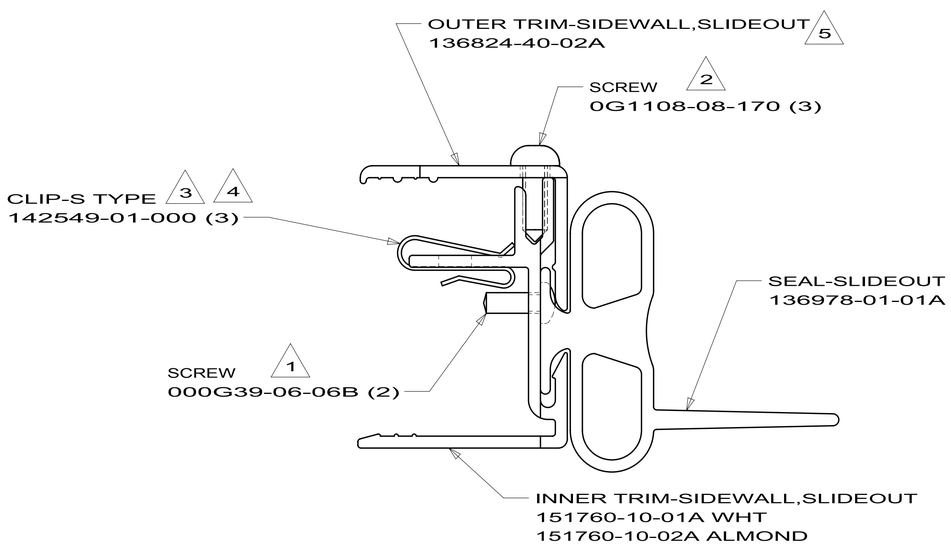

VIEW B

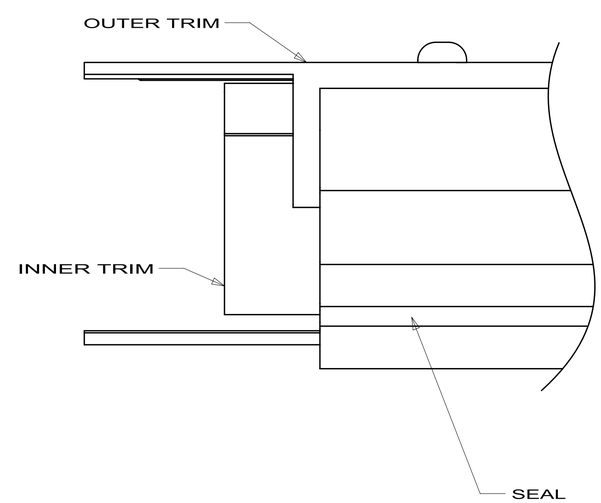

FIRST USED	FABWELL SDW
	DO NOT SCALE DRAWING
TITLE:	TRIM ASM-SLIDEOUT,TOP
SHEET 1	PART NO. 151762 REV

1/20/2010

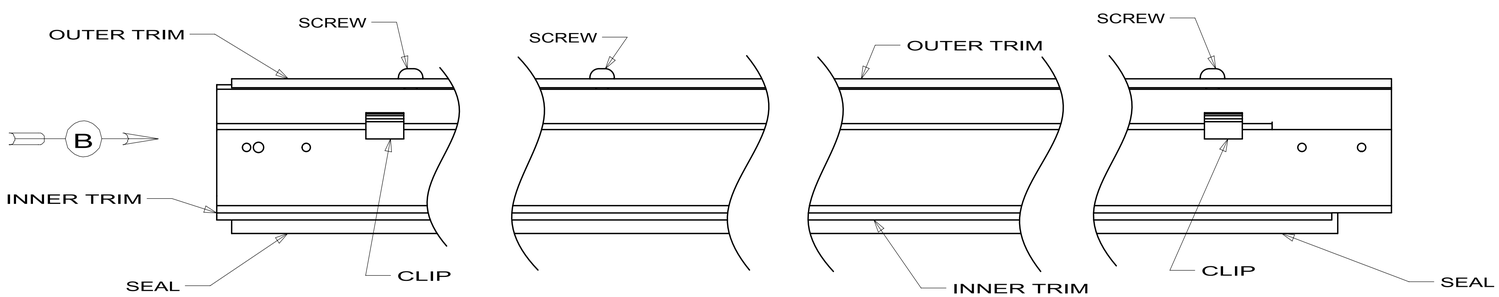

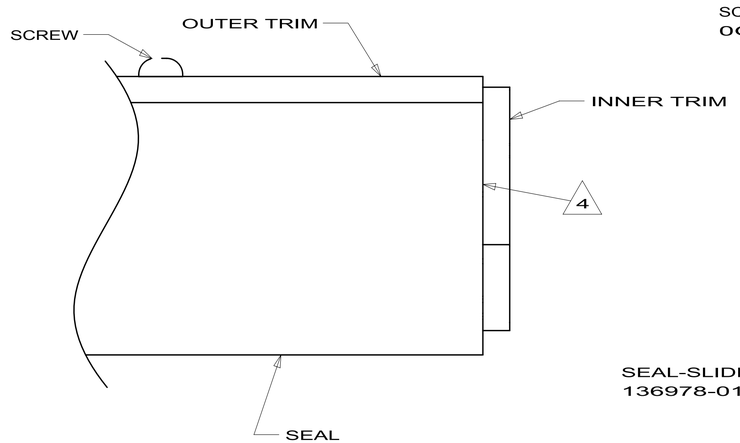

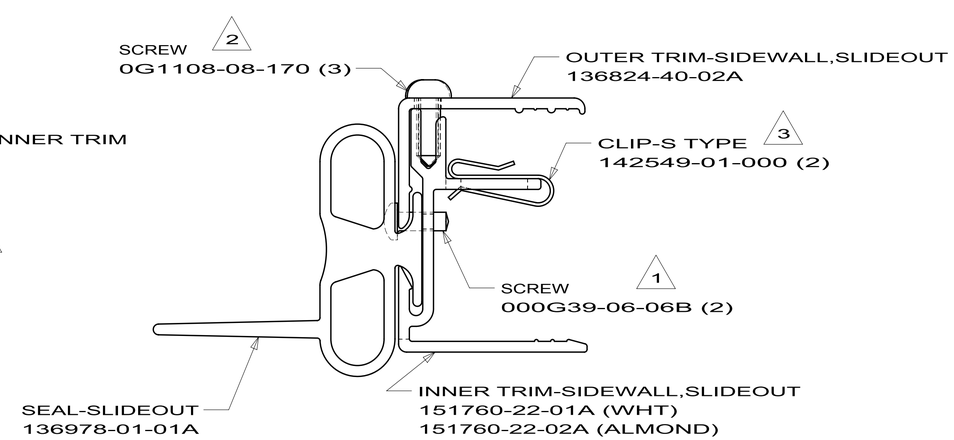

VIEW B

FABWELL SDW

4 SEAL TO BE FLUSH WITH OUTER TRIM.

3 TOLERANCE ON THE CLIP SPACING IS ± 100.0 MM.

2 APPLY SCREWS AT EACH END AND ONE IN THE MIDDLE OF THE OUTER TRIM.

1 APPLY SCREW THROUGH SEAL SO THAT IT HOLDS THE SEAL IN PLACE ON THE INNER TRIM.

NOTES:

TRIM ASM-SLIDEOUT,SIDE

1 2 151763

2/19/2010

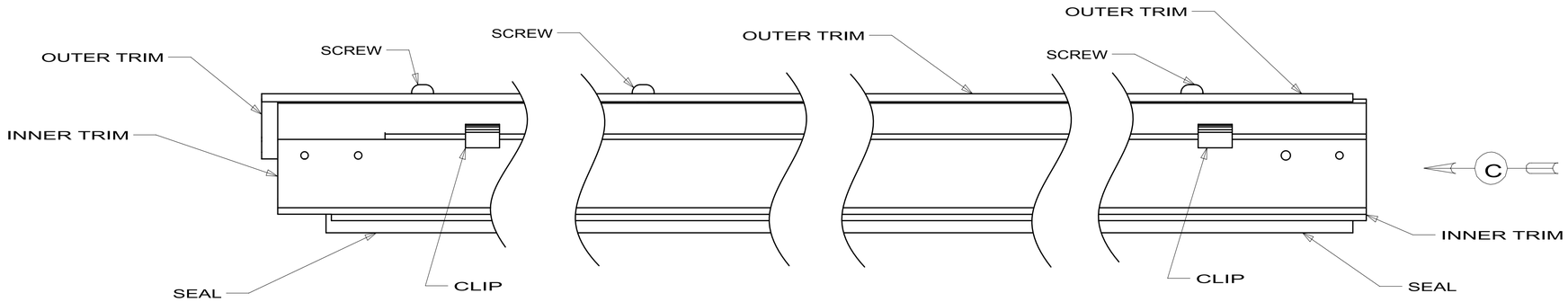

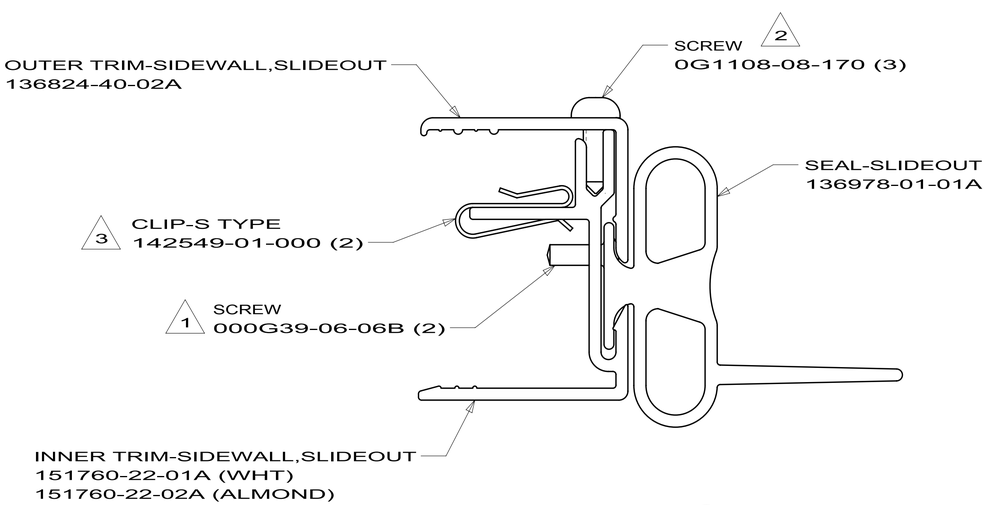

VIEW C

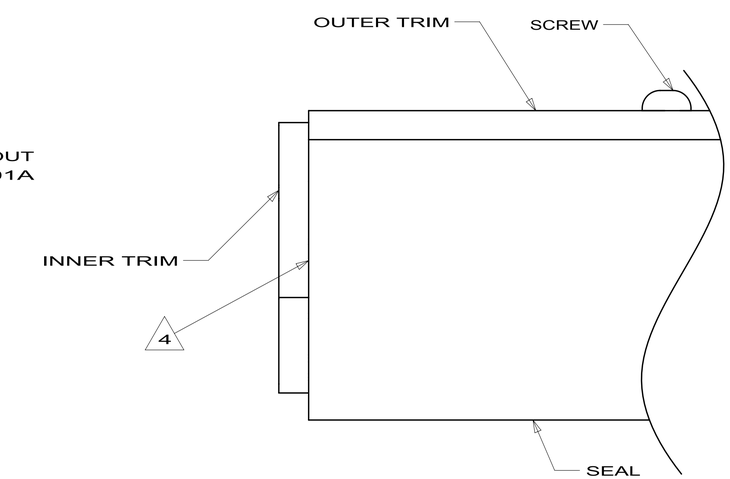

FABWELL SDW

TRIM ASM-SLIDEOUT,SIDE

2 151763

2/19/2010

DWG NO 162091

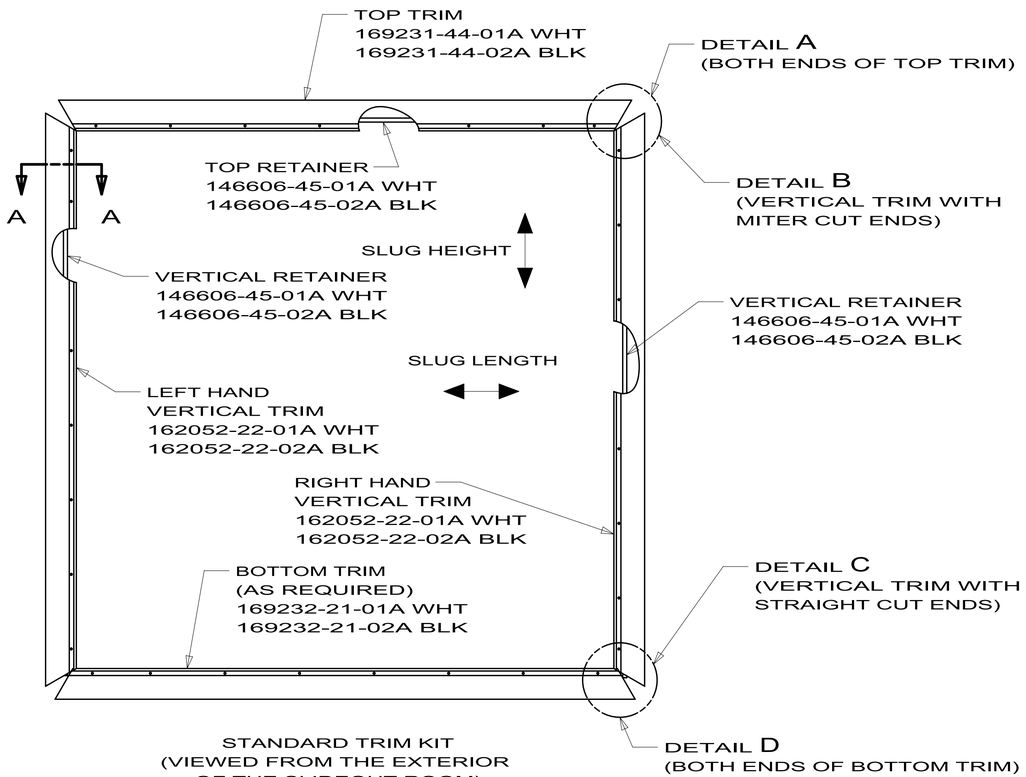

STANDARD TRIM KIT
(VIEWED FROM THE EXTERIOR
OF THE SLIDEOUT ROOM)

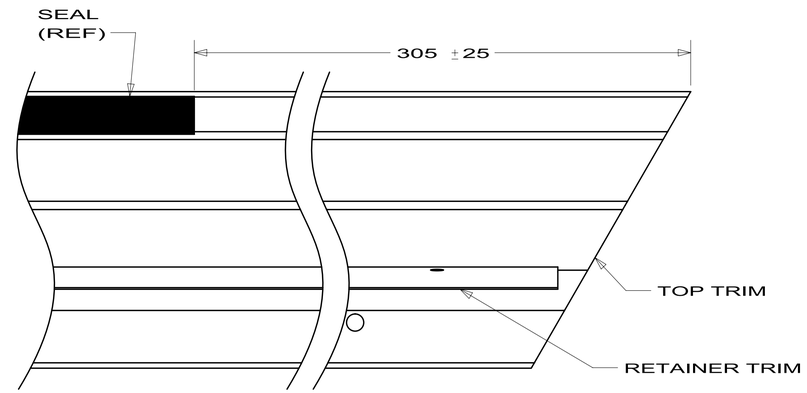

DETAIL A
(TOP TRIM)
(VIEWED FROM THE BACKSIDE OF THE TRIM)

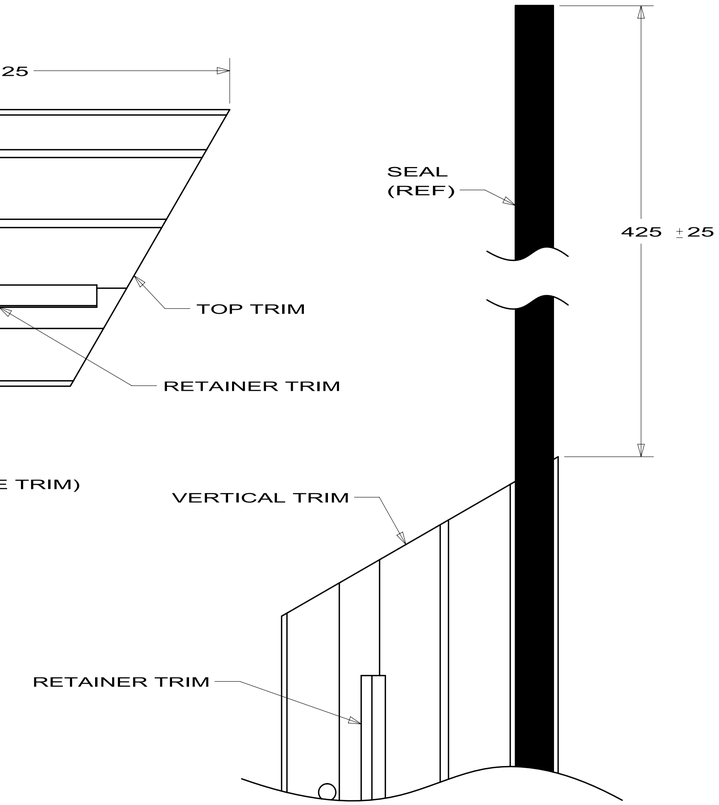

DETAIL B
(ALL MITER CUT VERTICAL TRIM)
(VIEWED FROM THE BACKSIDE OF THE TRIM)

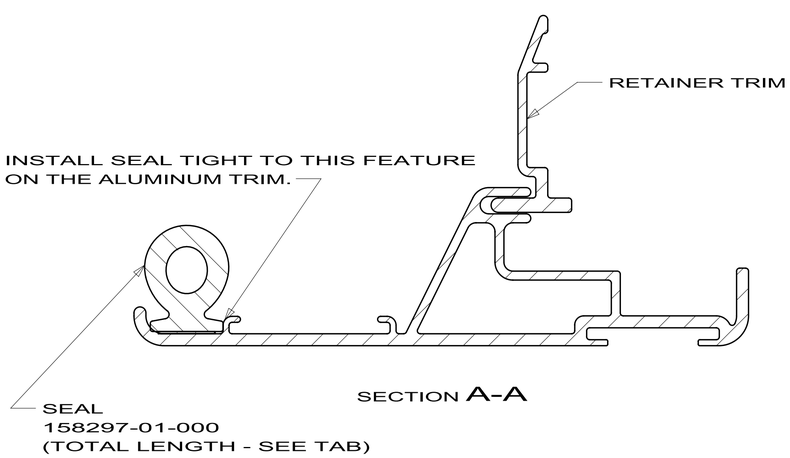

SECTION A-A

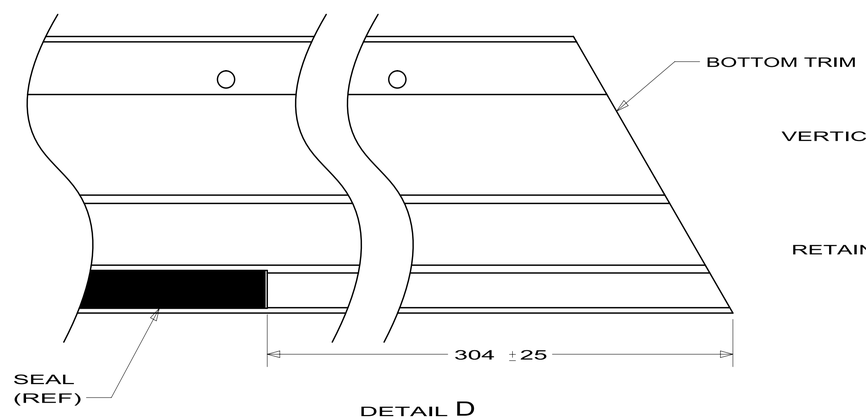

DETAIL D
(BOTTOM TRIM)
VIEWED FROM THE BACKSIDE OF THE TRIM)

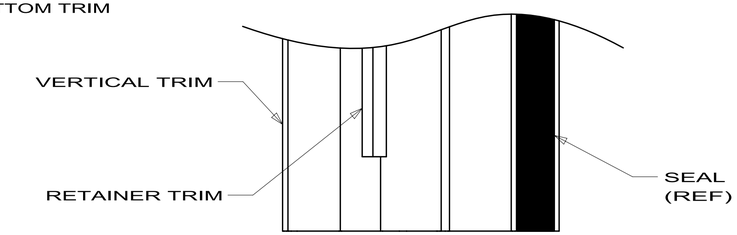

DETAIL C
(ALL STRAIGHT CUT VERTICAL TRIM)
(VIEWED FROM THE BACKSIDE OF THE TRIM)

FIRST USED	2007 MOTORHOMES
	DO NOT SCALE DRAWING
TITLE:	TRIM KIT-EXTERIOR,SLIDEOUT
SHEET 1	PART NO 162091 REV

1/20/2010

DWG NO 162091

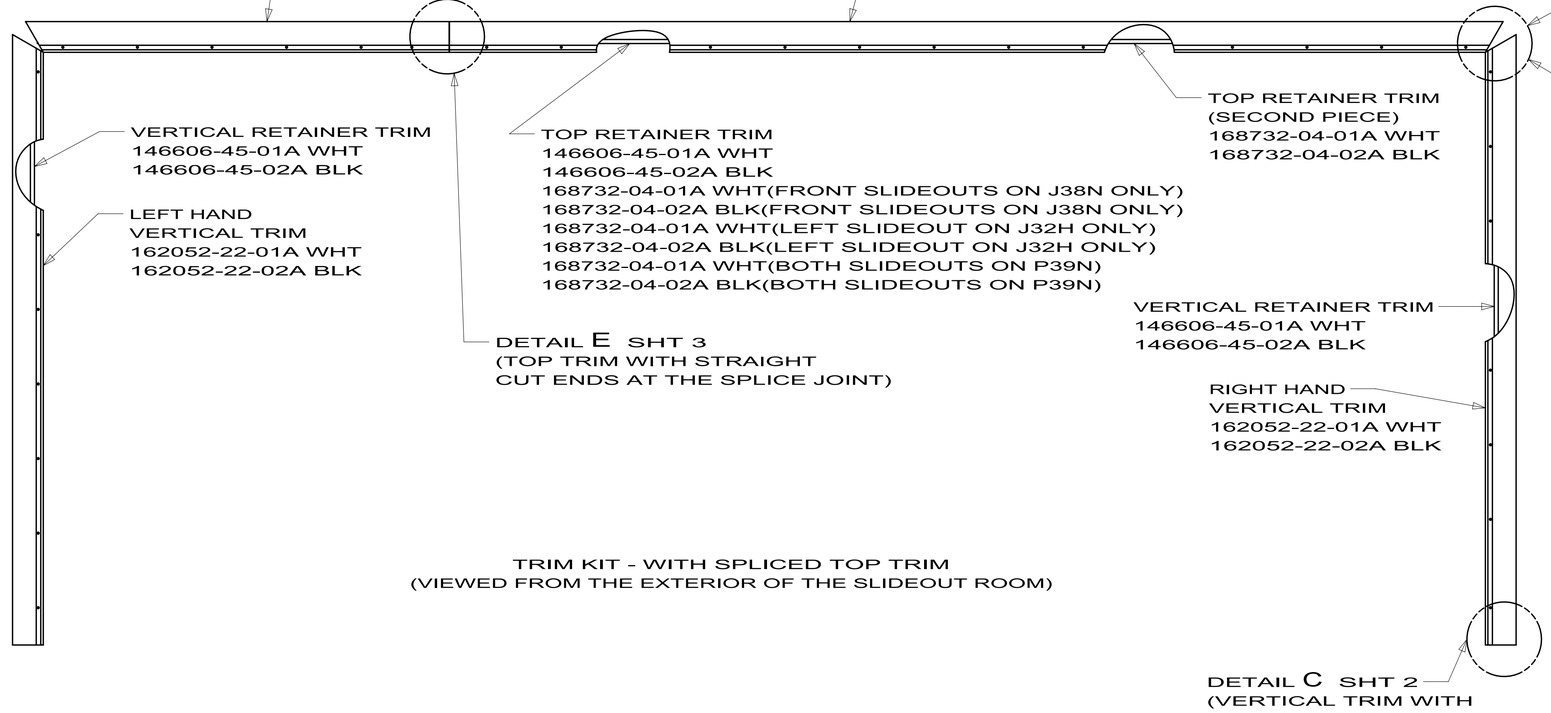

TRIM KIT - WITH SPLICED TOP TRIM
(VIEWED FROM THE EXTERIOR OF THE SLIDEOUT ROOM)

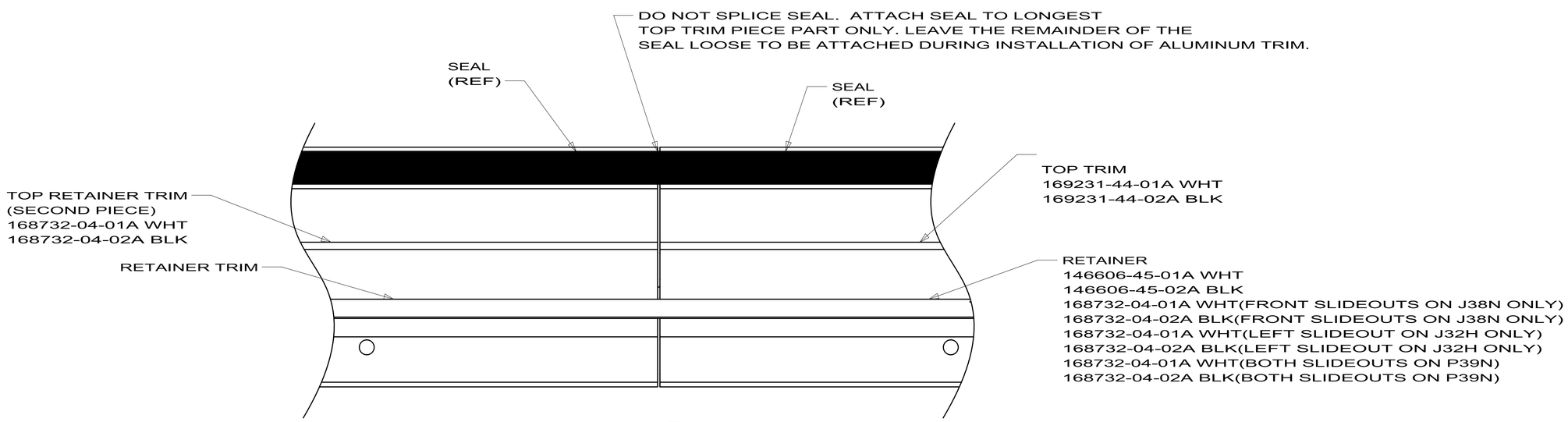

DETAIL E

(SPLICE IN TOP TRIM.)
(SHOWN FROM THE BACKSIDE OF TRIM.)

FIRST USED	2007 MOTORHOMES
	DO NOT SCALE DRAWING
TITLE:	TRIM KIT-EXTERIOR,SLIDEOUT
SHEET 2	PART NO 162091 REV

1/20/2010

162495-01-01A, 162495-02-01A

KEY	PART NUMBER	U/M	DESCRIPTION	VENDOR NO.
	162495-01-700	EA	BUTTON-DBL. PLAS. SNAP	DP130

COPYRIGHT © 2009 WINNEBAGO INDUSTRIES INC.