DWG NO	MODEL	LENGTH	ROLLER ASM	A	B	HARDWARE KIT	SHEET	
167590-01	E29R	16'	161802-04-CHT	661	36	161802-01-CHT	1,2	52F
167590-02	E26P	11.5'	161802-02-CHT	661	36	161802-01-CHT	1,2	
167590-03	E32K	13'	161802-06-CHT	601	96	161802-01-CHT	1,2	
167590-04	E29R	16'	161748-09-CHT	661	36	161748-18-CHT	1,2	52Z
167590-05	E26P	11.5'	161748-04-CHT	661	36	161748-18-CHT	1,2	
167590-06	E32K	13'	161748-06-CHT	601	96	161748-18-CHT	1,2	
167590-07	E30W	17'	153692-09-CHT	590	107	---	3	52F 52Z

RELEASE	REV A	DATE	DWG NO 167590
REV	ZONE	REVISION RECORD	DATE	DFTR-ORIG

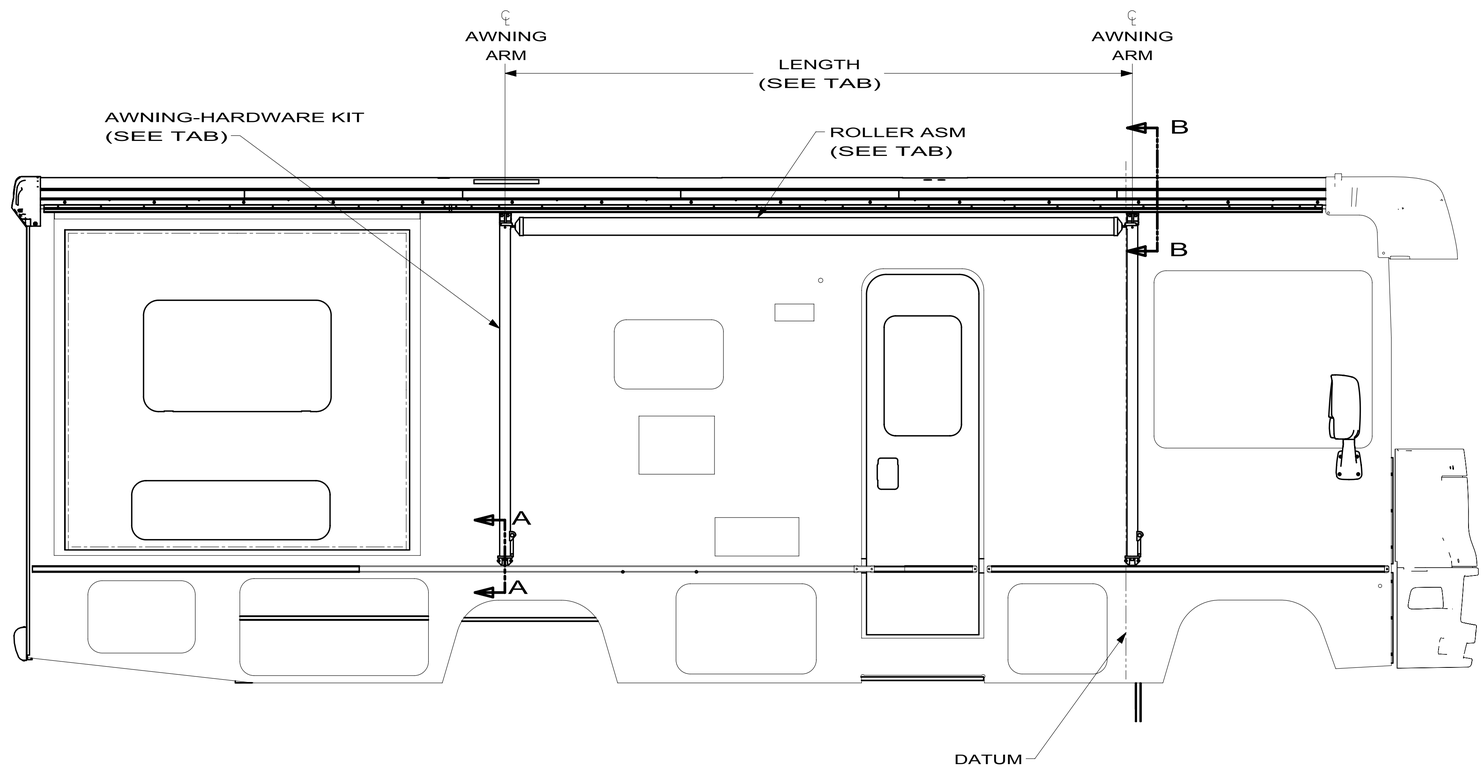

DOMESTIC A&E AWNINGS

52F AWNING-PATIO
52Z AWNING-PATIO, METAL WRAPPED

COPYRIGHT 2009 WINNEBAGO INDUSTRIES, INC.

DFTR	ORIG. DATE
CHKR	ALL DIMENSIONS ARE IN MILLIMETERS
P.E.	
M.E.	FIRST USED
DSNR	09 E-SERIES

UNSPECIFIED TOLERANCES ARE:
WHOLE DIM (X) :
ONE-PLACE (X.X) :
TWO-PLACE (X.XX) :
ANGLE :

MATERIAL:

THIRD ANGLE PROJECTION

DO NOT SCALE DRAWING

TITLE: AWNING INSTL E-SERIES

SHEET 1 OF 3 | PART NO 167590 | REV

REF:

1 USE IN PLACE OF KIT SUPPLIED BOLT.

NOTES:

DWG NO 167590

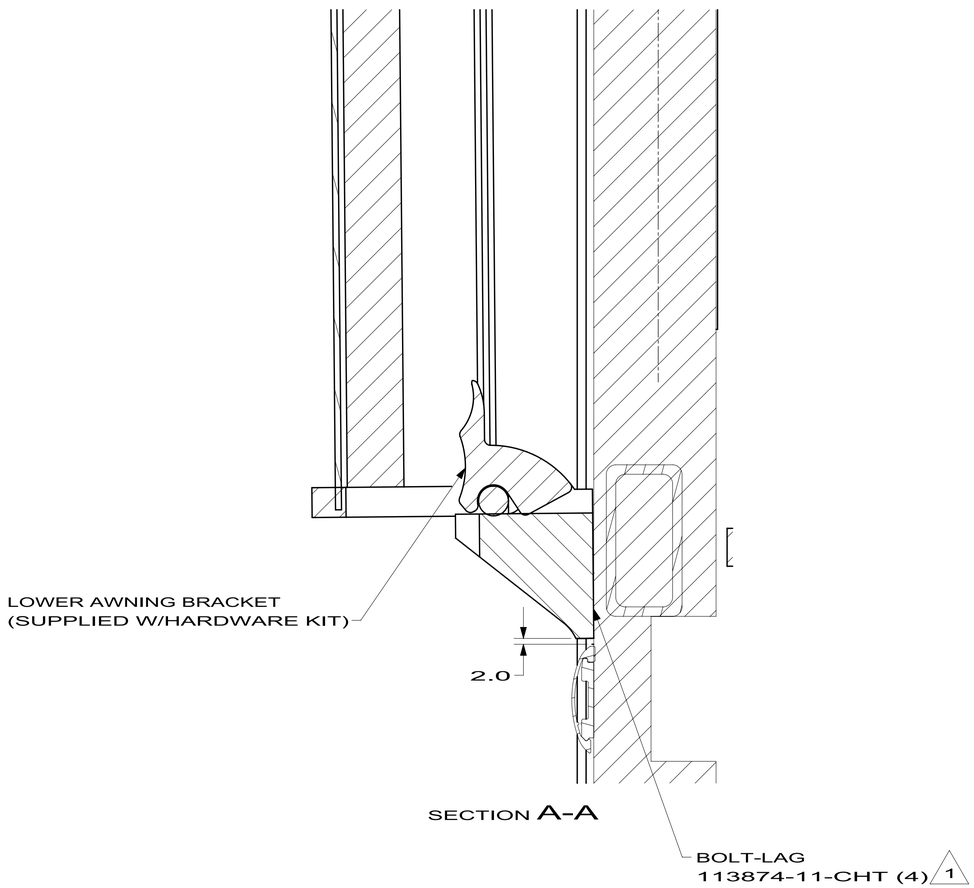

SECTION A-A

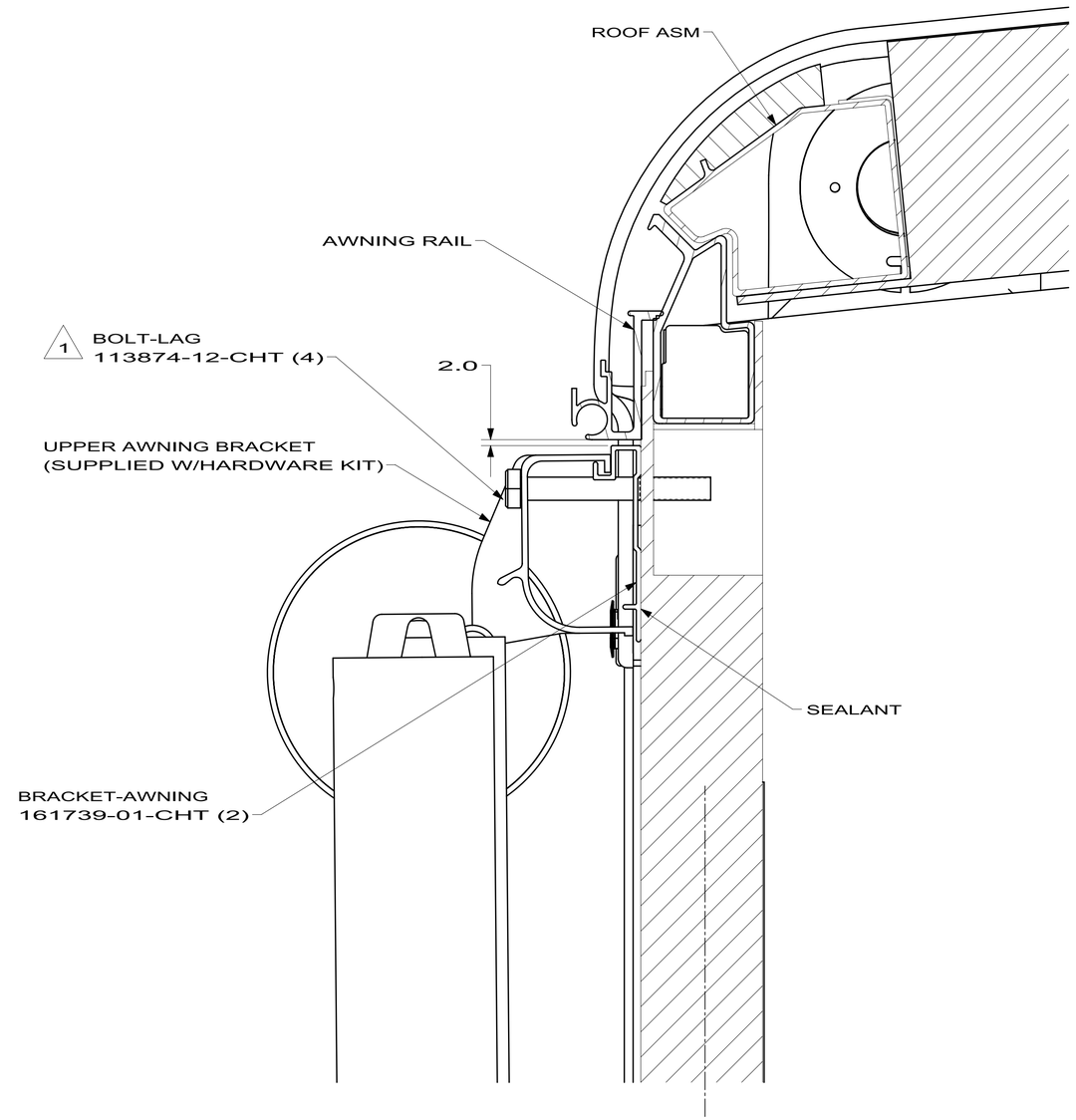

SECTION B-B

FIRST USED	09 E-SERIES
DO NOT SCALE DRAWING	
TITLE:	AWNING INSTL E-SERIES
SHEET 2	PART NO 167590 REV

DWG NO 167590

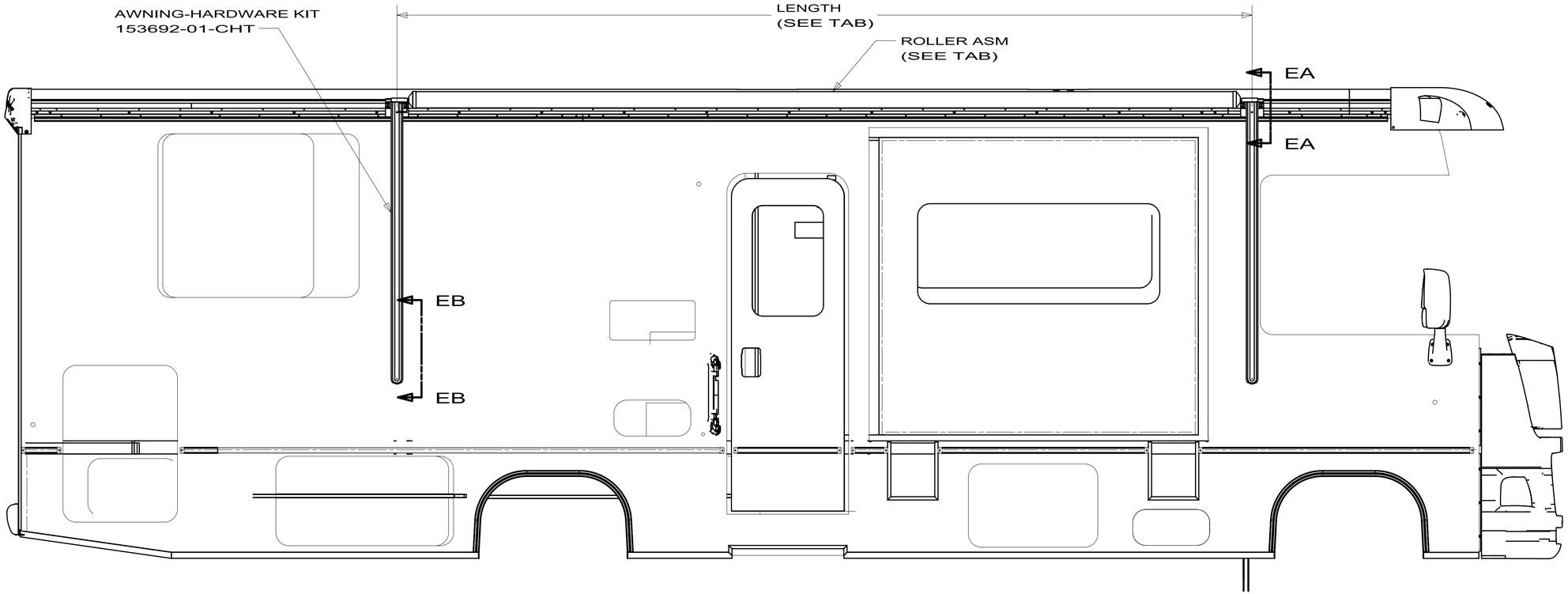

52F 52Z

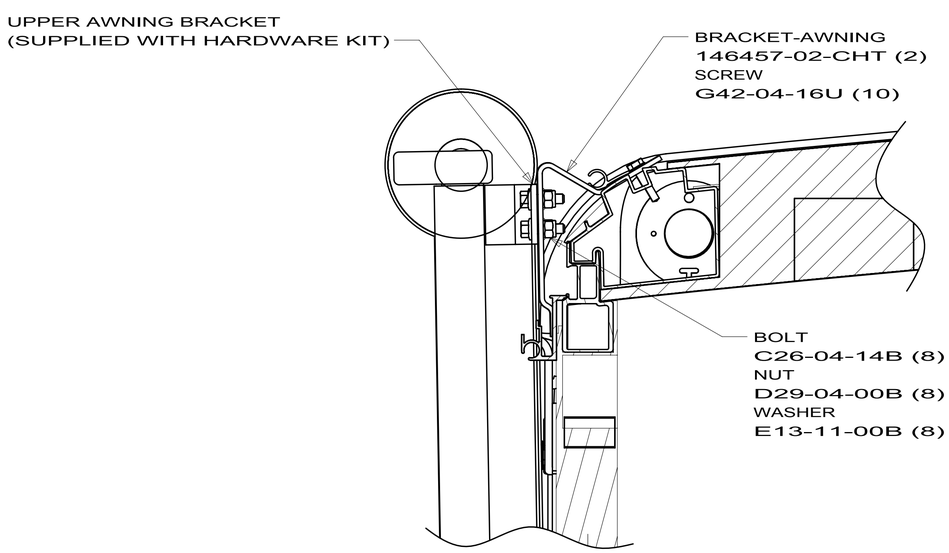

SECTION EA-EA

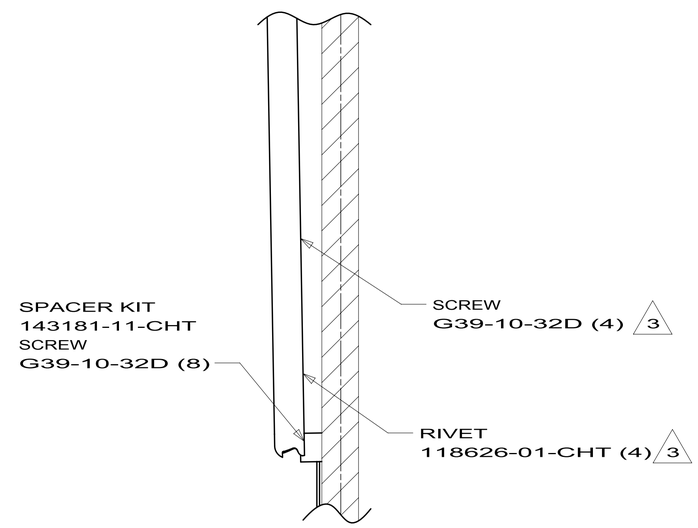

SECTION EB-EB

FIRST USED	09 E-SERIES
	DO NOT SCALE DRAWING
TITLE:	AWNING INSTL E-SERIES
SHEET 3	PART NO 167590 REV

RELEASE	REV A	DATE	DWG NO 167602
REV	ZONE	REVISION RECORD	DATE / DFTR-ORIG

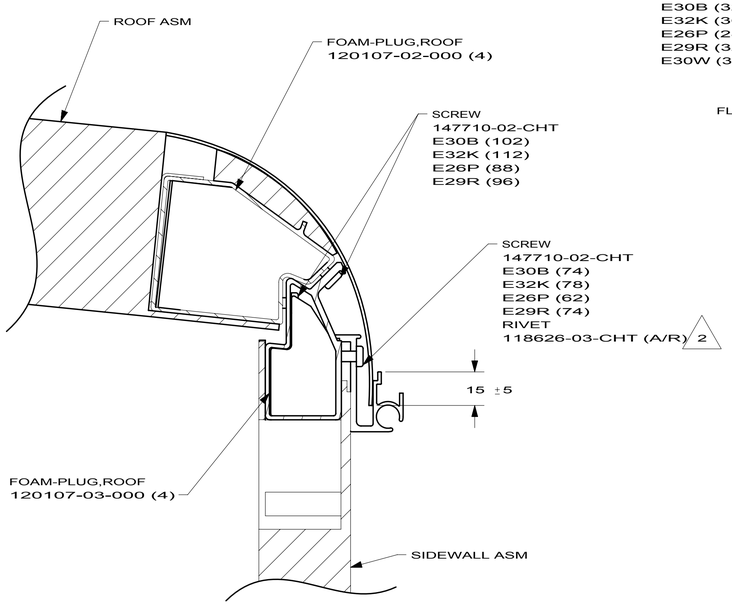

SECTION AA-AA

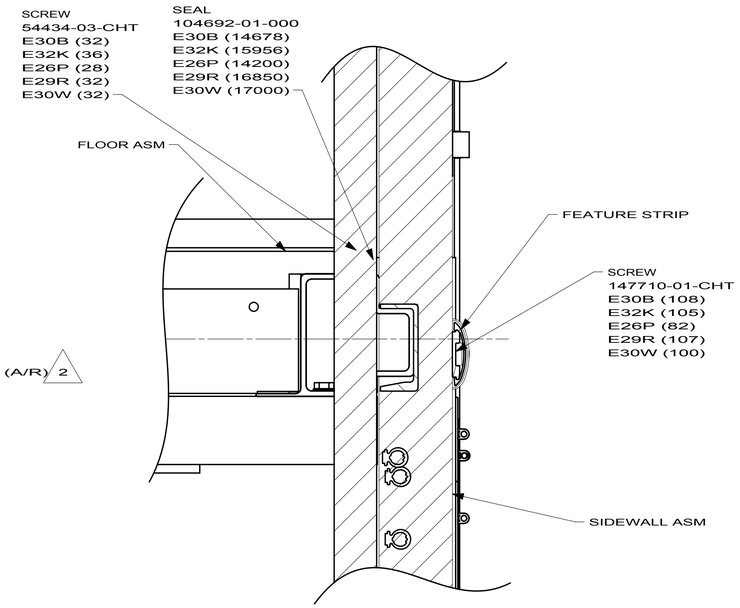

SECTION AB-AB

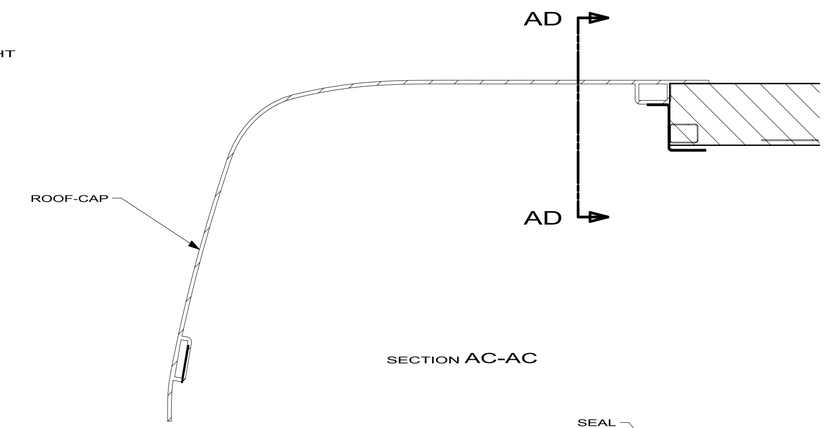

SECTION AC-AC

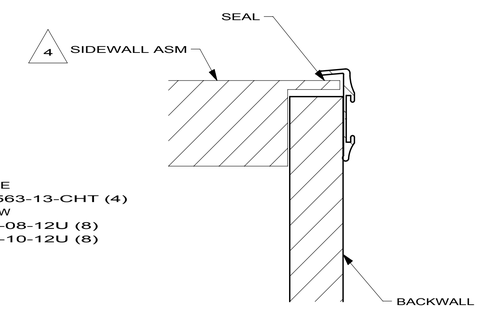

SECTION AF-AF

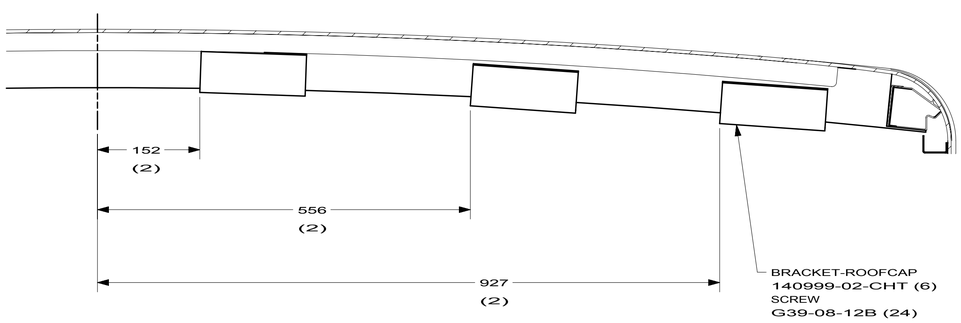

SECTION AD-AD

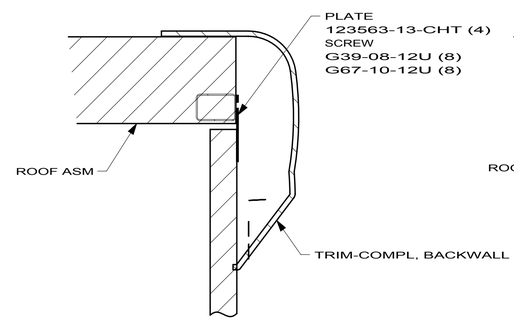

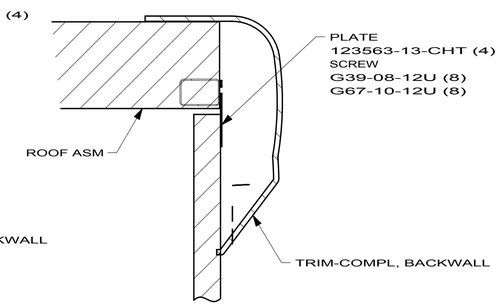

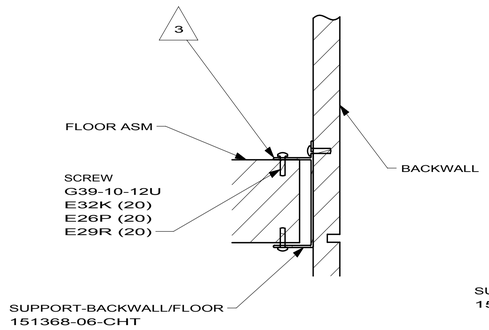

SECTION AE-AE

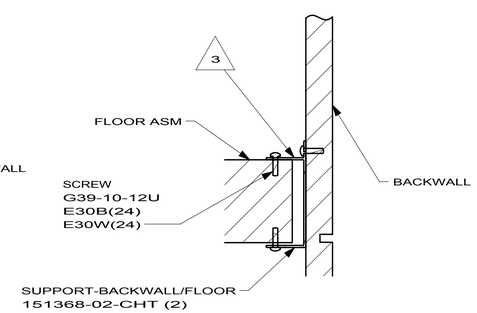

SECTION AL-AL

4. SEE SEALANT MANUAL.

3. SEE ES0061 FOR CARPET ATTACHMENT AT BACKWALL.

2. RIVET MUST BE LOCATED WITHIN 50mm OF RAIL-AWNING SPLICE, DRILL ADDITIONAL HOLES AND ADD RIVETS AS REQUIRED.

1. PLACE SEALANT AT THE END OF RAIN CHANNEL.

NOTES:

WINNEBAGO INDUSTRIES

COPYRIGHT 2009
WINNEBAGO
INDUSTRIES, INC.

DFTR	ORIG. DATE
CHKR	ALL DIMENSIONS ARE IN MILLIMETERS
P.E.	
M.E.	FIRST USED
DSNR	09 E-SERIES

UNSPECIFIED TOLERANCES ARE:
WHOLE DIM (X) : 3
ONE-PLACE (X.X) : 1.5
TWO-PLACE (X.XX) : 0.50
ANGLE : 1°

MATERIAL:

THIRD ANGLE PROJECTION

DO NOT SCALE DRAWING

TITLE: BODY INSTL-SECTIONS

SHEET 1 OF 2 | PART NO. 167602 | REV

REF:

DWG NO 167602

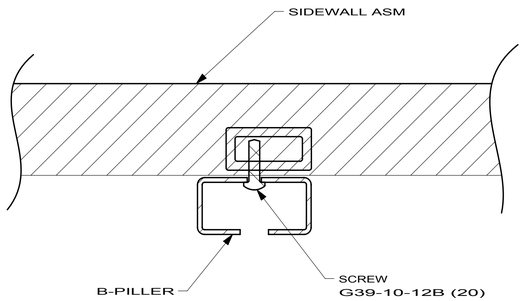

SECTION AG-AG

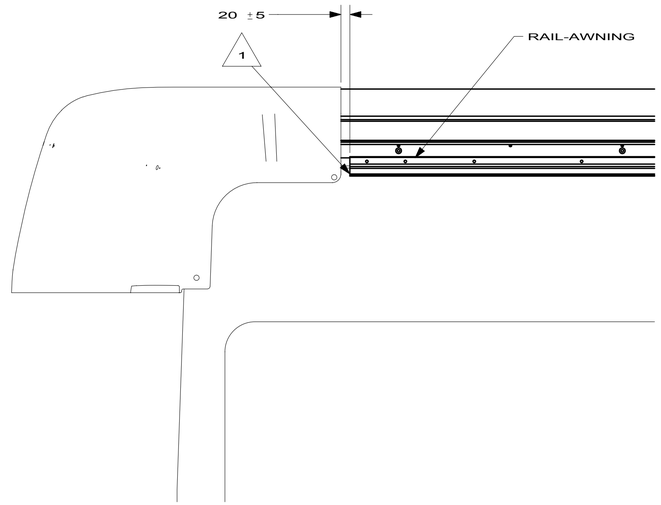

VIEW AH-AH

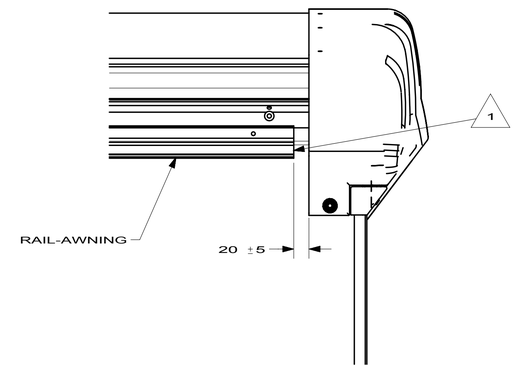

VIEW AK-AK

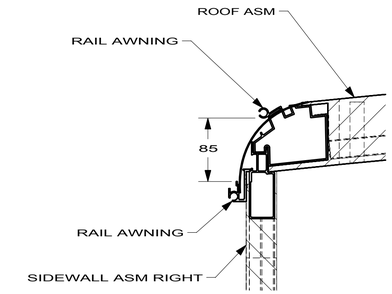

SECTION AM-AM

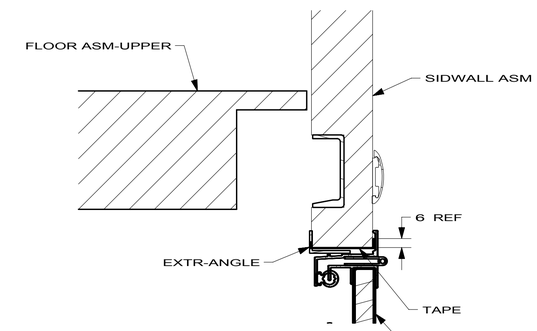

SECTION BC-BC

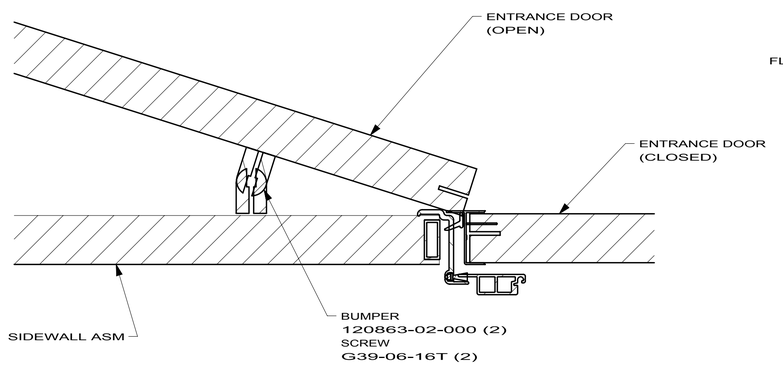

SECTION BA-BA

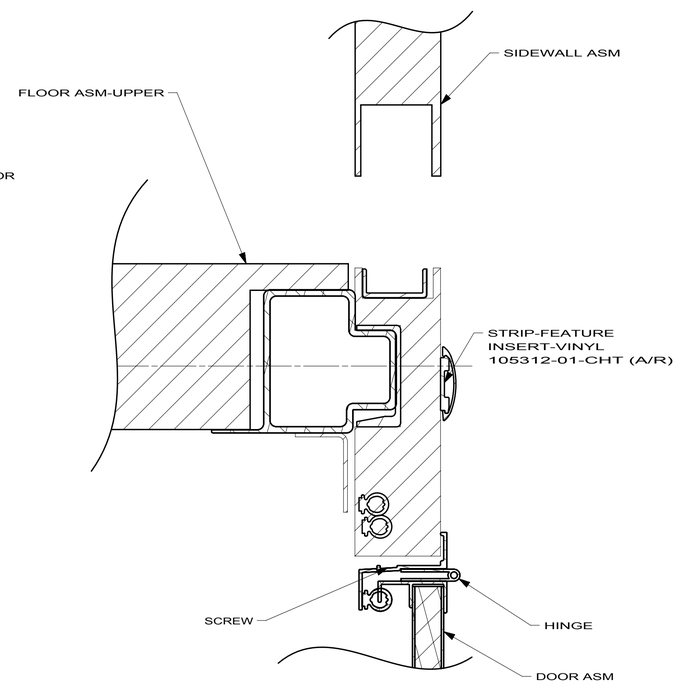

SECTION BB-BB

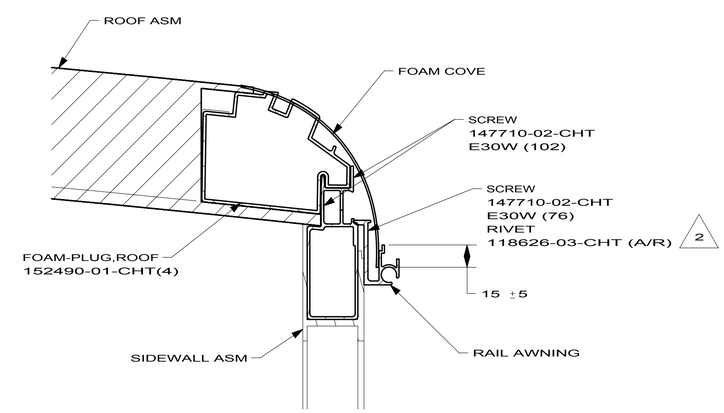

SECTION AN-AN

FIRST USED	09 E-SERIES
	DO NOT SCALE DRAWING
TITLE:	BODY INSTL-SECTIONS
SHEET 2	PART NO 167602 REV

RELEASE	REV A	DATE	DWG NO 171931

REV	ZONE	REVISION RECORD	DATE	DFTR-ORIG

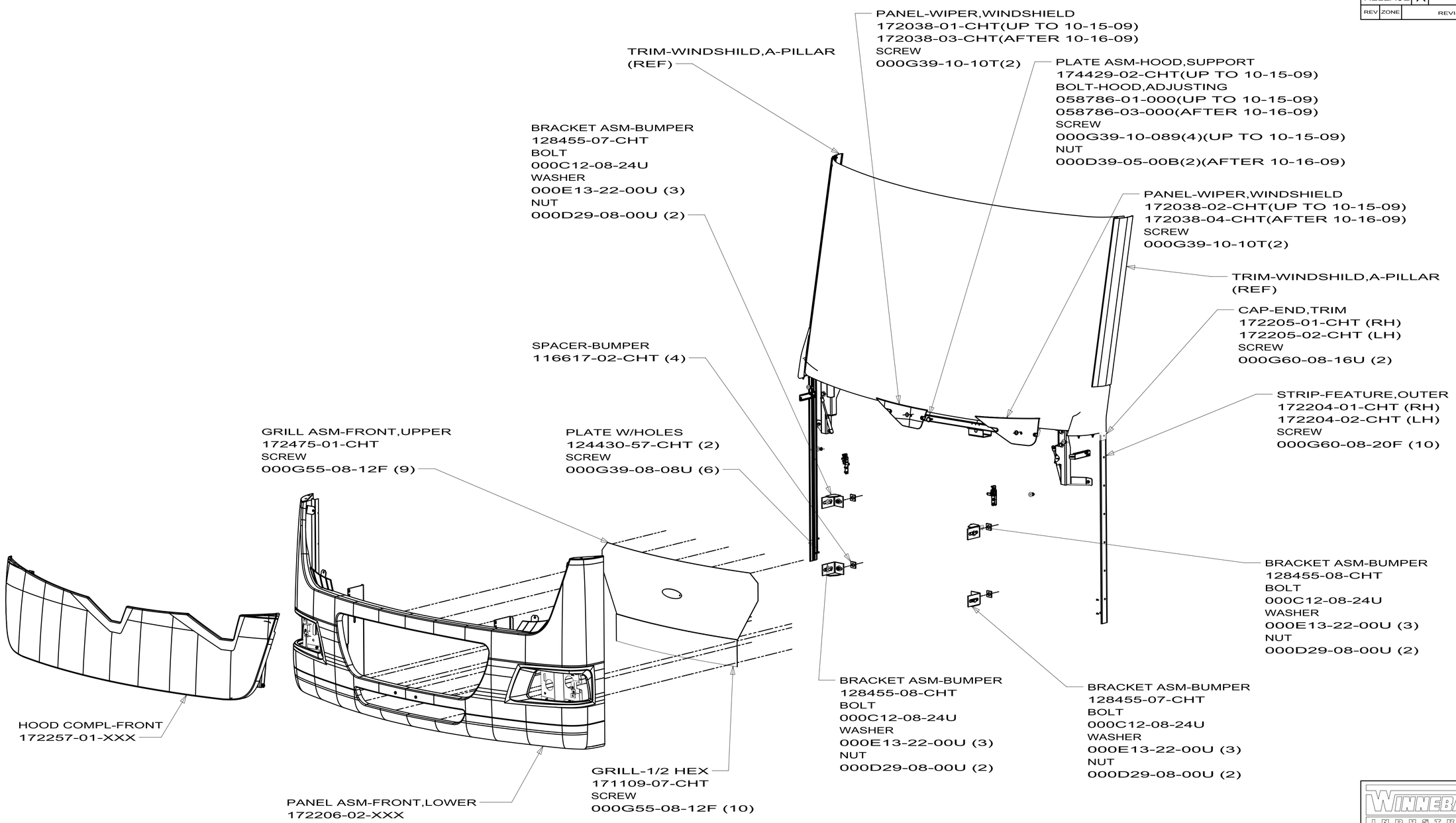

2. KEY 102328-01-000 (1) TO BE INSTALLED ON KEY RING IN MOTORHOME PLANT.

1. TOP OF PANEL ASM-FRONT, LOWER TO BE ALIGNED WITH BOTTOM EDGE OF WINDSHIELD.

NOTES:

COPYRIGHT 2009
WINNEBAGO
INDUSTRIES, INC.

DFTR	ORIG. DATE
CHKR	ALL DIMENSIONS ARE IN MILLIMETERS
P.E.	
M.E.	FIRST USED
DSNR	10 E-SERIES

UNSPECIFIED TOLERANCES ARE:

WHOLE DIM (X)	:	1.5
ONE-PLACE (X.X)	:	1.5
TWO-PLACE (X.XX)	:	0.50
ANGLE	:	1°

MATERIAL:

THIRD ANGLE PROJECTION

DO NOT SCALE DRAWING

TITLE:
BODY PANEL INSTL-FRONT

SHEET 1 OF 3 | PART NO. 171931 | REV

REF: 1

10/16/2009

DWG NO 171931

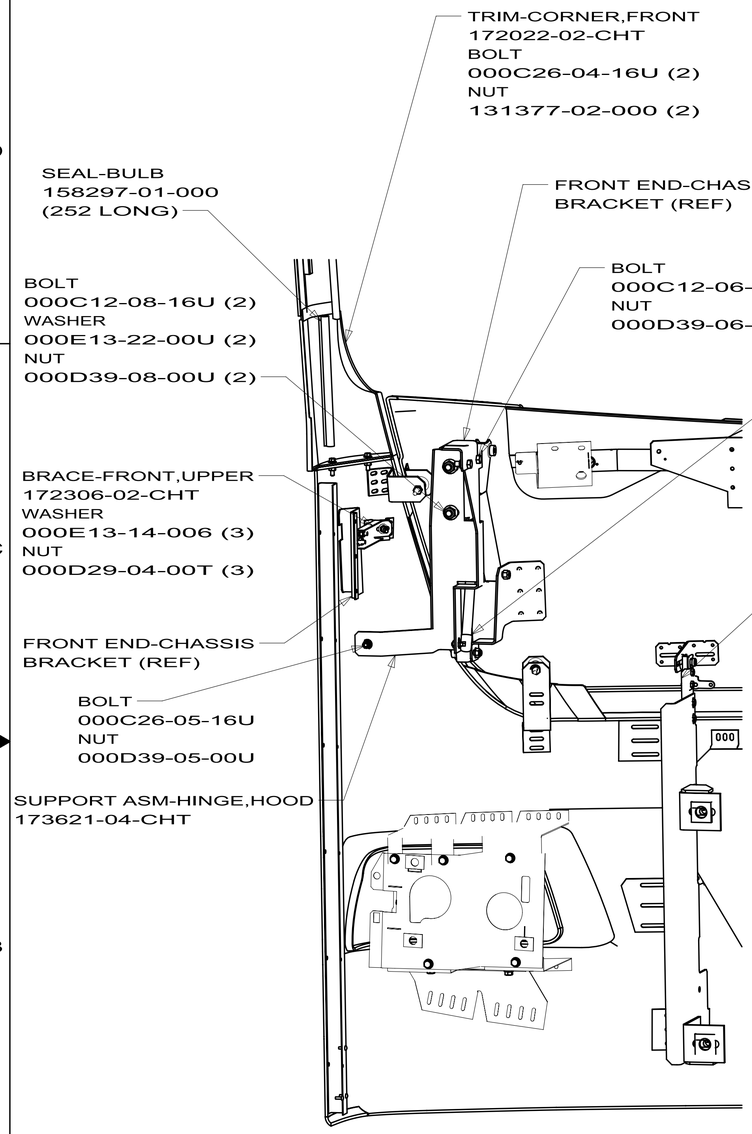

VIEW BA

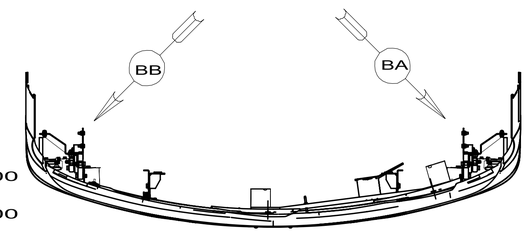

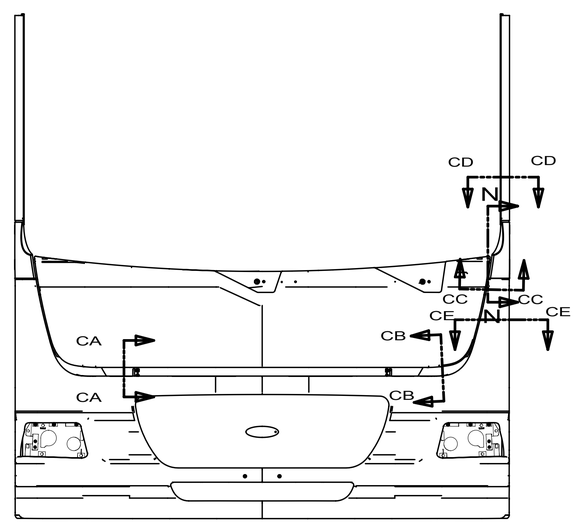

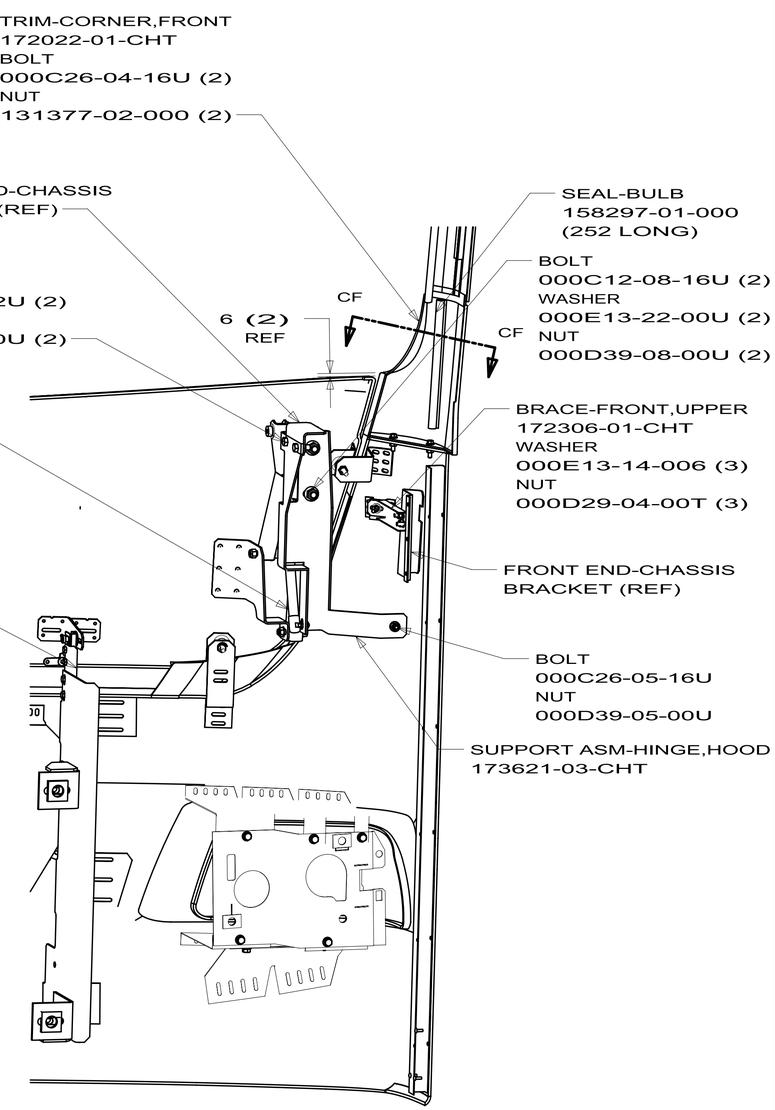

VIEW BB

FIRST USED	10 E-SERIES
	DO NOT SCALE DRAWING
TITLE:	BODY PANEL INSTL-FRONT
SHEET 2	PART NO 171931 REV

10/16/2009

DWG NO 171931

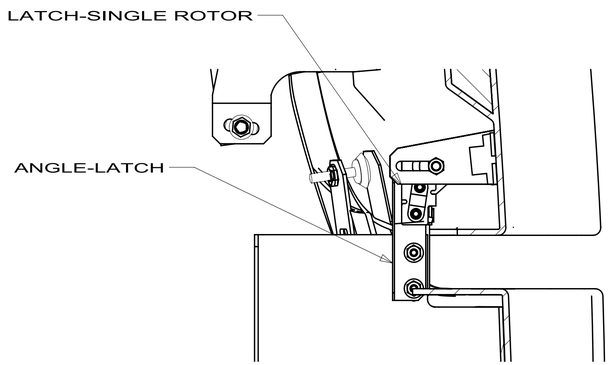

SECTION CA-CA

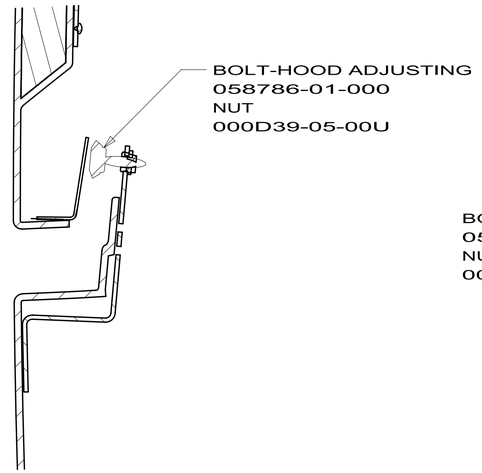

SECTION CB-CB
(BOTH SIDES)

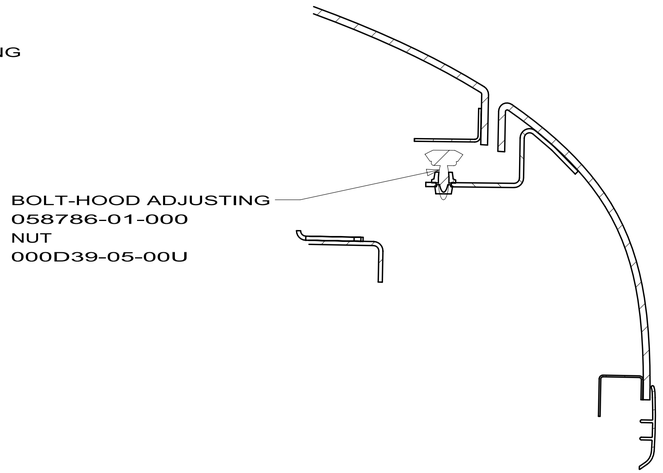

SECTION CC-CC
(BOTH SIDES)

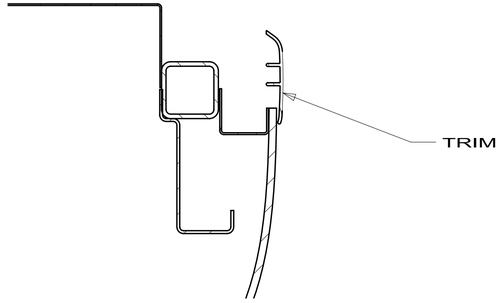

SECTION CE-CE

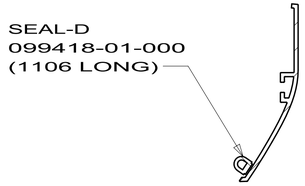

SECTION CD-CD
(BOTH SIDES)

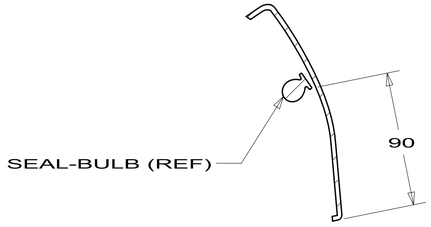

SECTION CF-CF
(BOTH SIDES)

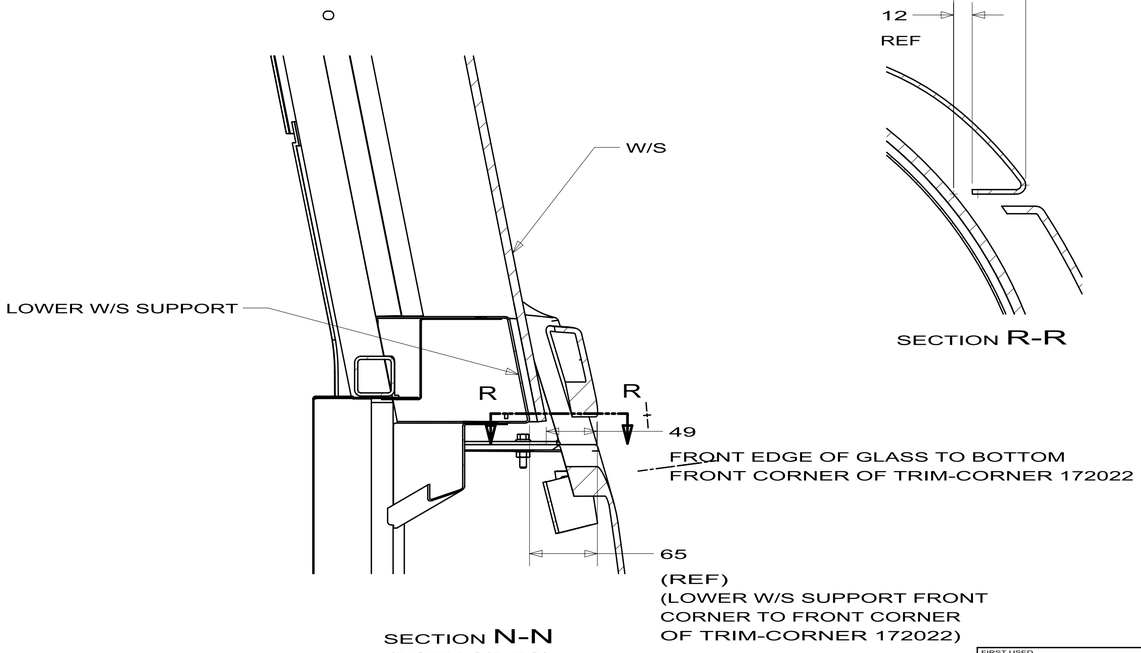

SECTION N-N
(BOTH SIDES)

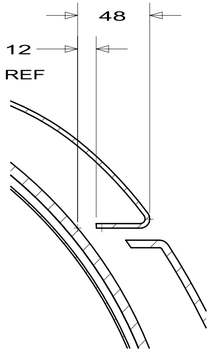

SECTION R-R

FIRST USED	10 E-SERIES
	DO NOT SCALE DRAWING
TITLE:	BODY PANEL INSTL-FRONT
SHEET 3	PART NO 171931 REV

10/16/2009

DWG NO 172206

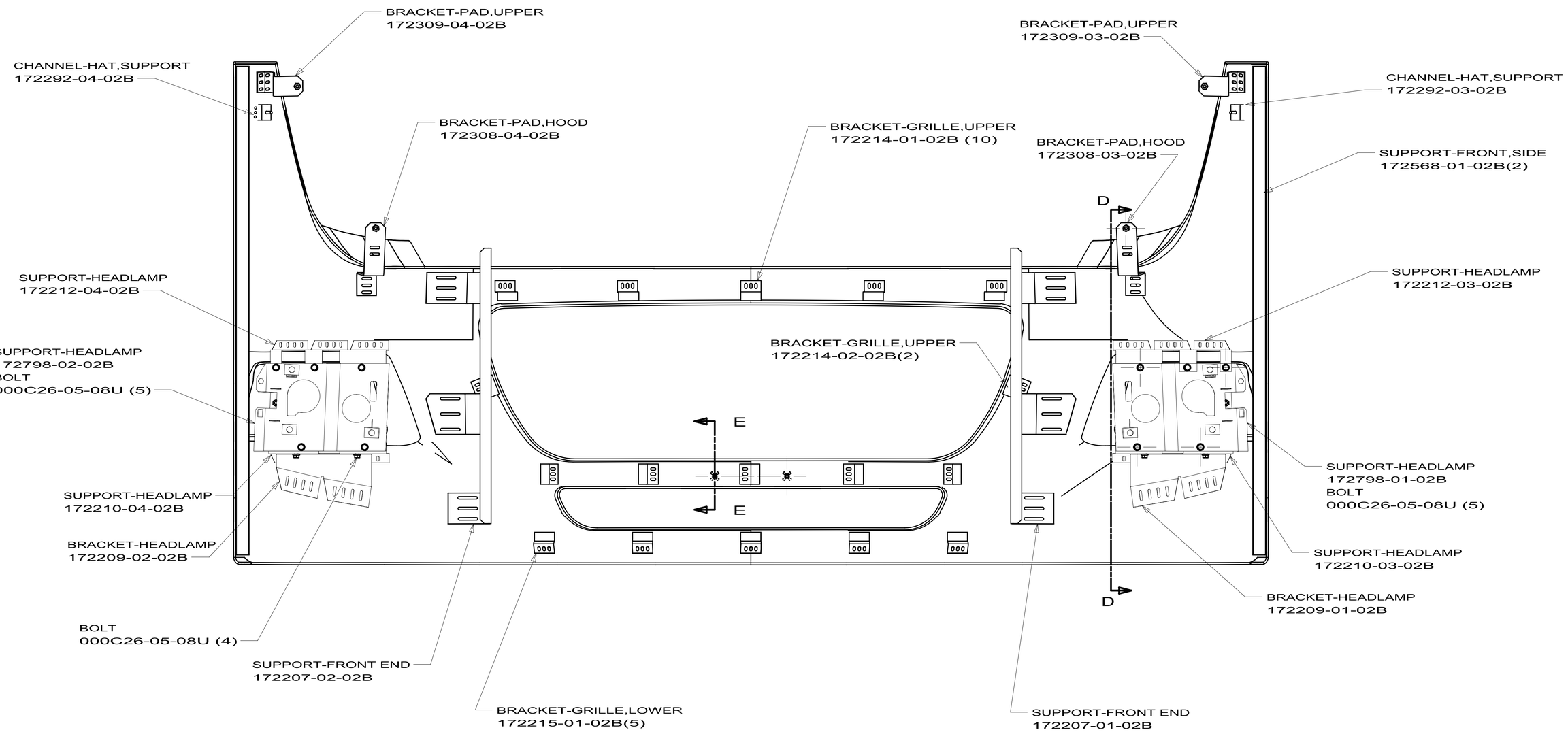

FIRST USED	10 E-SERIES
	DO NOT SCALE DRAWING
TITLE:	PANEL-FRONT,LOWER
SHEET 1	PART NO 172206 REV

3/19/2010

DWG NO 172206

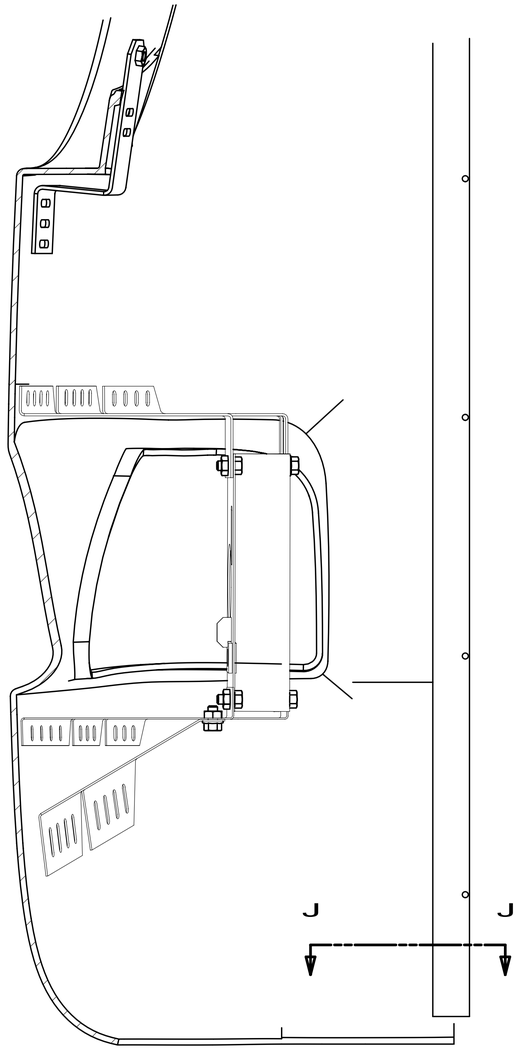

SECTION D-D

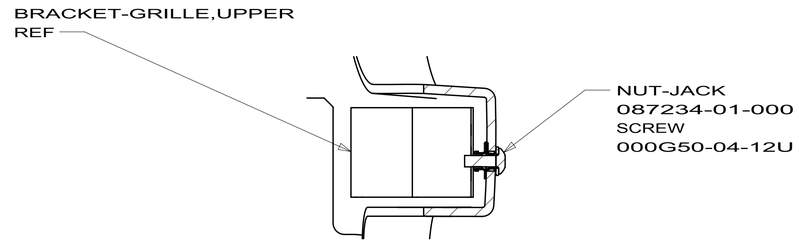

SECTION E-E
(2 PLCS)

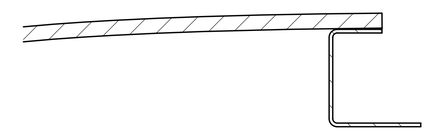

SECTION J-J

2-PLCS

FIRST USED	10 E-SERIES
	DO NOT SCALE DRAWING
TITLE:	PANEL-FRONT,LOWER
SHEET 2	PART NO 172206 REV

3/19/2010

RELEASE	REV A	DATE	DWG NO 172257

REV	ZONE	REVISION RECORD	DATE	DFTR-ORIG

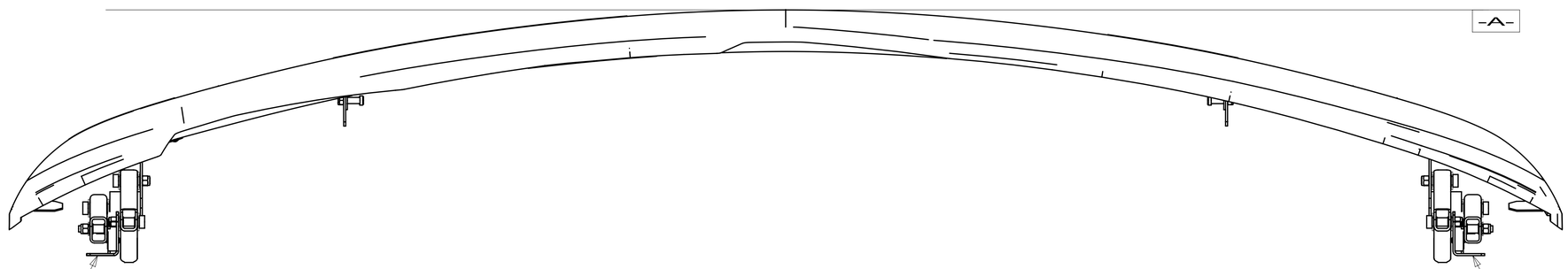

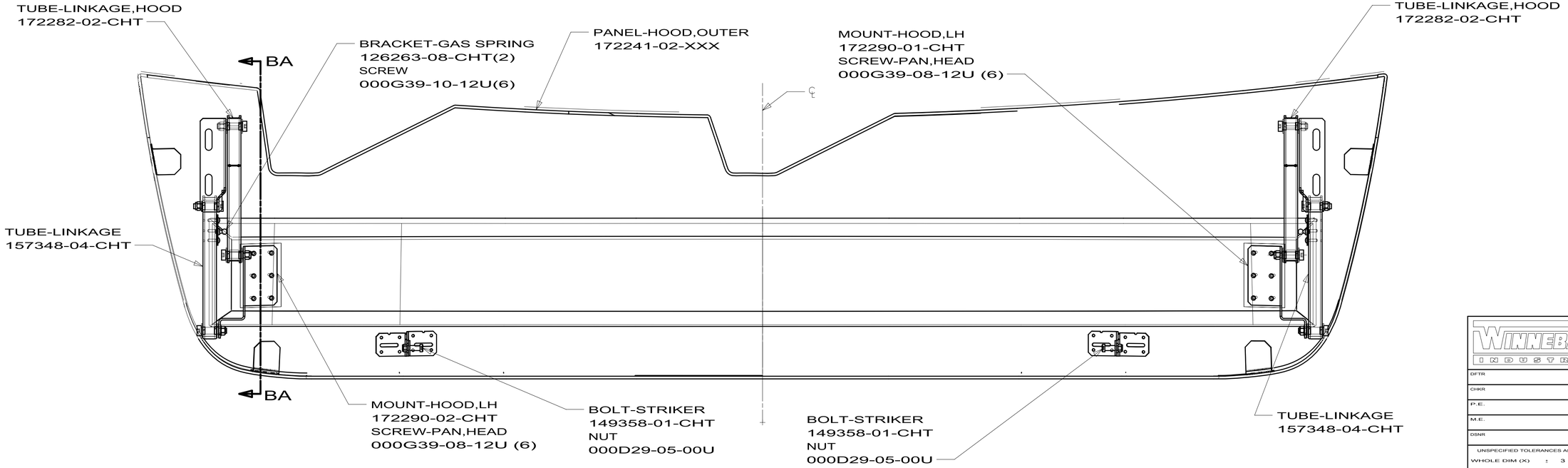

COPYRIGHT 2009
WINNEBAGO
INDUSTRIES, INC.

DFTR	ORIG. DATE
CHKR	ALL DIMENSIONS ARE IN MILLIMETERS
P.E.	
M.E.	FIRST USED
DSNR	10 E-SERIES

UNSPECIFIED TOLERANCES ARE:

WHOLE DIM (X)	:	3
ONE-PLACE (X.X)	:	1.5
TWO-PLACE (X.XX)	:	0.50
ANGLE	:	1°

MATERIAL:
FIBERGLASS
ES0020

THIRD ANGLE PROJECTION

WEIGHT: 9.58 LBS

DO NOT SCALE DRAWING

TITLE:
HOOD COMPL-FRONT

SHEET 1 OF 2 | PART NO. 172257 | REV

REF: 1

DWG NO 172257

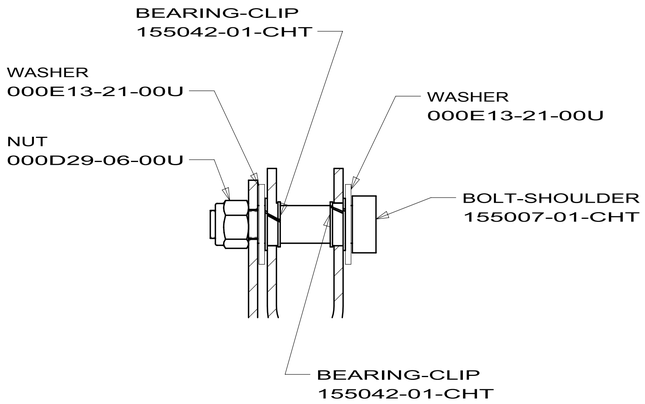

SECTION BB-BB
(2 PLCS)

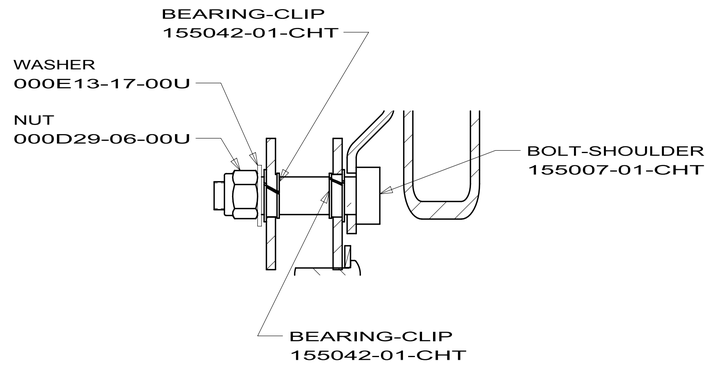

SECTION BC-BC
(2 PLCS)

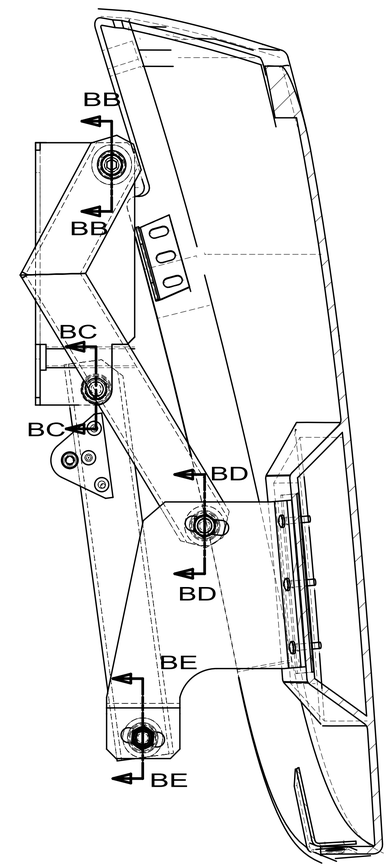

SECTION BA-BA

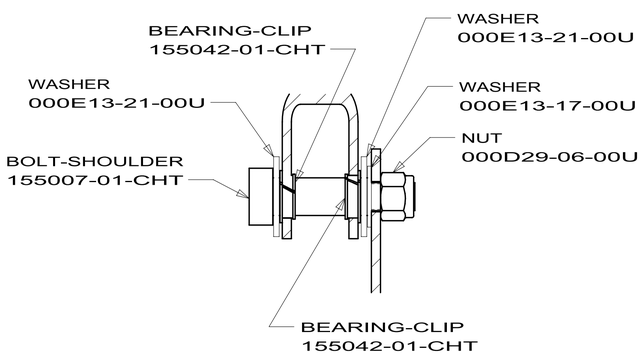

SECTION BD-BD
(2 PLCS)

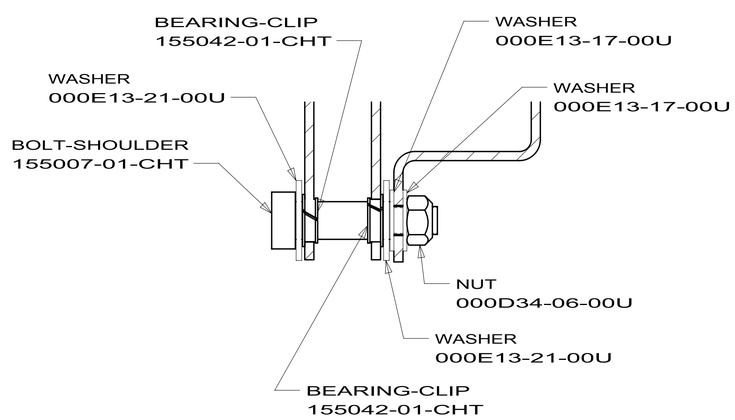

SECTION BE-BE
(2 PLCS)

FIRST USED	10 E-SERIES
	DO NOT SCALE DRAWING
TITLE:	HOOD COMPL-FRONT
SHEET 2	PART NO 172257 REV

DWG NO	UNIT	SHEET
172338-01	E29R	1,2
172338-02	E32K	1,3
172338-03	E26P	1,4
172338-04	E30W	1,5

RELEASE	REV A	DATE	DWG NO 172338

REV	ZONE	REVISION RECORD	DATE	DFTR-ORIG

KEY	PART NUMBER (27G)		DESCRIPTION
1	132664-02-01A		DECAL-LOGO DOMED WINNEBAGO
2	151687-02-01A		DECAL-DOMED NAMEPLATE ITASCA
3	144587-02-48A		DECAL-ITASCA
4	140087-01-07A		DECAL-SUNSTAR, LG
5	129922-02-01A (16N)(16H)(16K) CHASSIS SUPPLIED (1PR)		DECAL-EMBLEM TRITON V-10 DECAL-EMBLEM
6	172341-01-01A		DECAL-HOOK HOOD
7	172342-01-01A		DECAL-HOOK REAR
8	172343-01-01A		DECAL-SWEEP #1, RH
9	172343-02-01A		DECAL-SWEEP #1. LH
10	172344-01-01A		DECAL-SWEEP #2, RH
11	172344-02-01A		DECAL-SWEEP #2, LH
12	172345-01-01A		DECAL-SWEEP #3, RH
13	172345-02-01A		DECAL-SWEEP #3, LH
14	172346-01-01A		DECAL-SWEEP #4, RH
15	172346-02-01A		DECAL-SWEEP #4, LH
16	172347-01-01A		DECAL-SWEEP #5, RH
17	172347-02-01A		DECAL-SWEEP #5, LH
18	172348-01-01A		DECAL-HOOK #1, RH
19	172348-02-01A		DECAL-HOOK #1, LH
20	172350-01-01A		DECAL-HOOK #2, RH
21	172350-02-01A		DECAL-HOOK #2, LH
22	172388-01-01A (26F)(26H)		PAINT MASK-UPPER BACKWALL
23	172389-01-01A (26F)(26H)		PAINT MASK-LOWER BACKWALL
24	172390-01-01A (26F)(26H)		PAINT MASK-MID LOWER SIDEWALL, RH
25	172390-02-01A (26F)(26H)		PAINT MASK-MID LOWER SIDEWALL, LH
26	141599-95-000 (26F)	141599-74-000 (26H)	PAINT
27	141599-74-000 (26F)	141599-B5-000 (26H)	PAINT
28	165266-01-01A (26F)(26H)		PAINT MASK-REFRIG VENT

(1PR) WORKHORSE 22,000#-19.5 TIRE
(1PE) WORKHORSE 20,500 DSL 230HP
(16K) FORD CHASSIS 22,000
(16H) FORD CHASSIS 18,000#/V10 ENG
(16N) FORD CHASSIS-16,000 LB. GVWR
(26H) EXT GRAPHIC/PAINT-DLX PKG 2
(26F) EXT GRAPHIC/PAINT DLX PKG 1
(27G) EXTERIOR GRAPHICS PACKAGE #1

NOTES:

5. VINYL DECAL WILL BE APPLIED WHERE EVER GRAPHIC DESIGN PATTERN IS POSITIONED OVER SLIDEROOM EXTRUSION, BUT WILL NOT BE APPLIED TO VINYL SCREW COVER INSERT.

4. ALL LOGOS ARE TO BE +/- 1mm ON A HORIZONTAL PLANE (END TO END).

3. CLEAR COAT 141599-C2-000 TO BE APPLIED ON ALL PAINTED AREAS.

2. APPLY FILM-URETHANE PROTECTANT 109506-01-000 AT BOTTOM OF ENTRANCE DOOR TO PREVENT SCUFFMARKS.

1. APPLY PROTECTOR 116424-01-000 TO WATER HEATER DOOR LATCH.

SEE CHART
FOR COLOR VARIATIONS OF THIS PART

WINNEBAGO INDUSTRIES

COPYRIGHT 2009
WINNEBAGO
INDUSTRIES, INC.

DFTR | ORIG. DATE
CHKR | ALL DIMENSIONS ARE IN MILLIMETERS
P.E.
M.E. | FIRST USED: 10 E SERIES (SUNSTAR)
DSNR

UNSPECIFIED TOLERANCES ARE:
WHOLE DIM (X) : 20
ONE-PLACE (X.X) : 10
TWO-PLACE (X.XX) : .
ANGLE : .

MATERIAL:

THIRD ANGLE PROJECTION

DO NOT SCALE DRAWING

TITLE: GRAPHICS INSTALLATION

SHEET 1 OF 5 | PART NO 172338 | REV

REF: 1

10/21/2009

DWG NO 172338

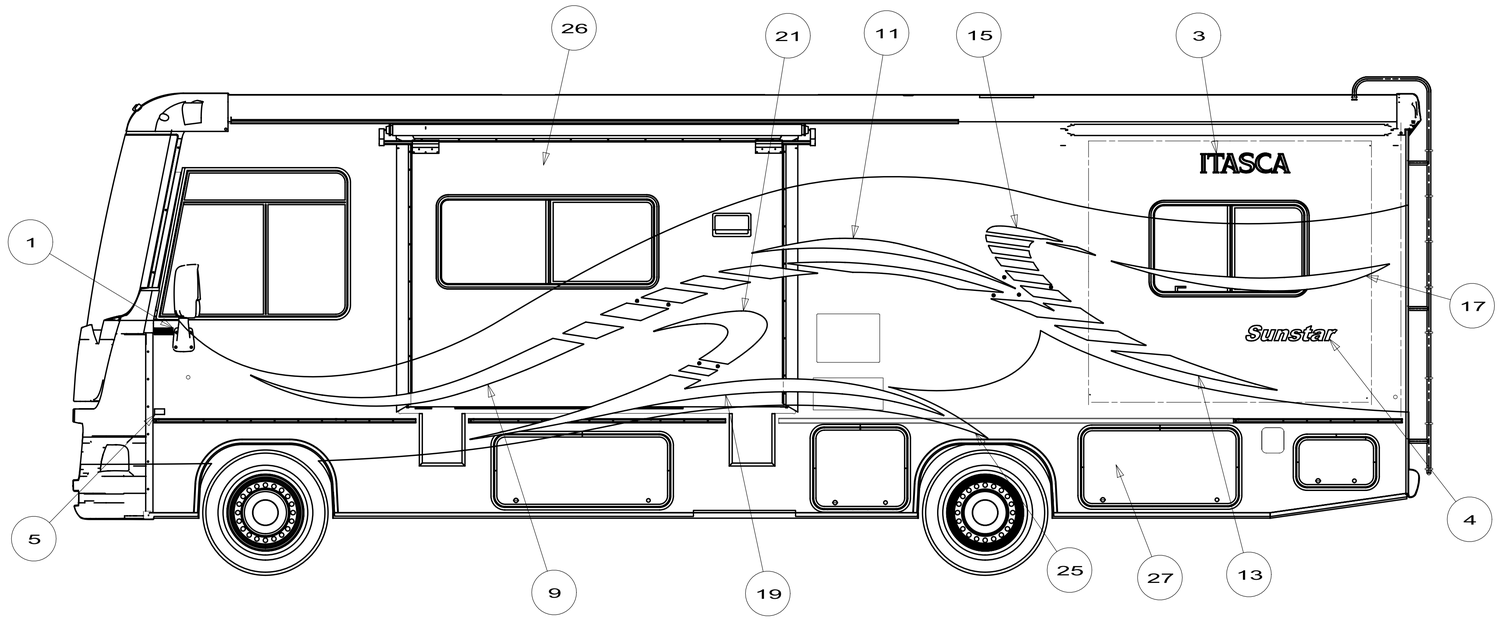

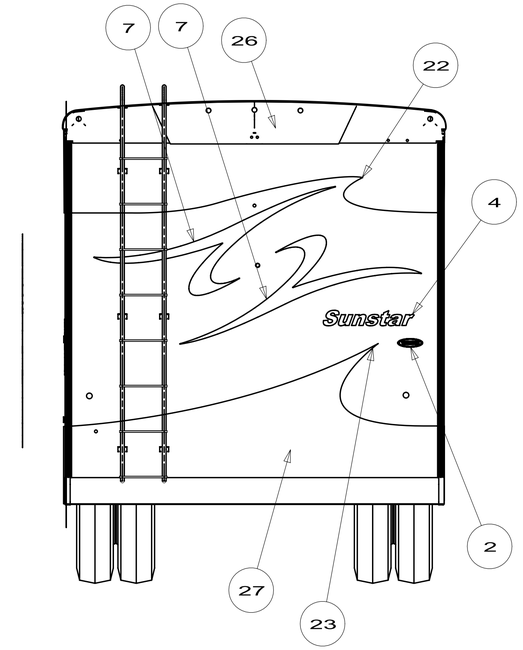

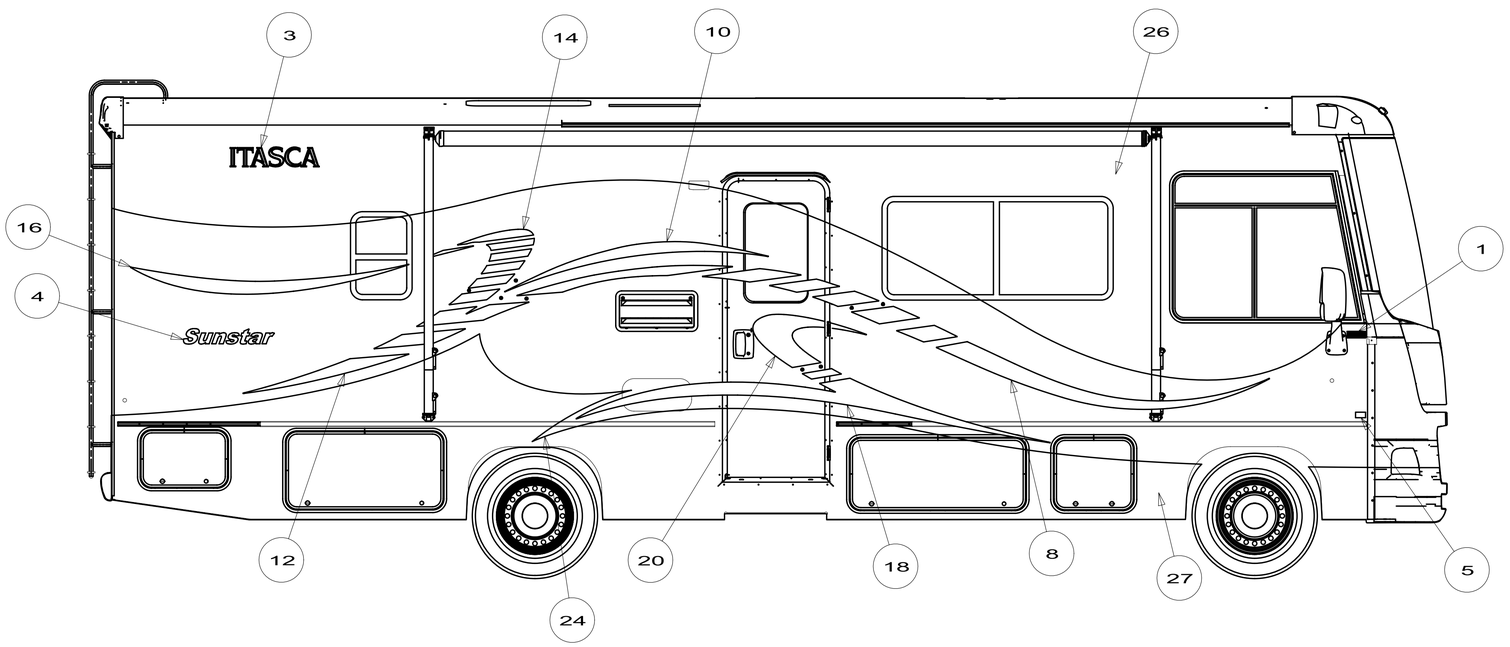

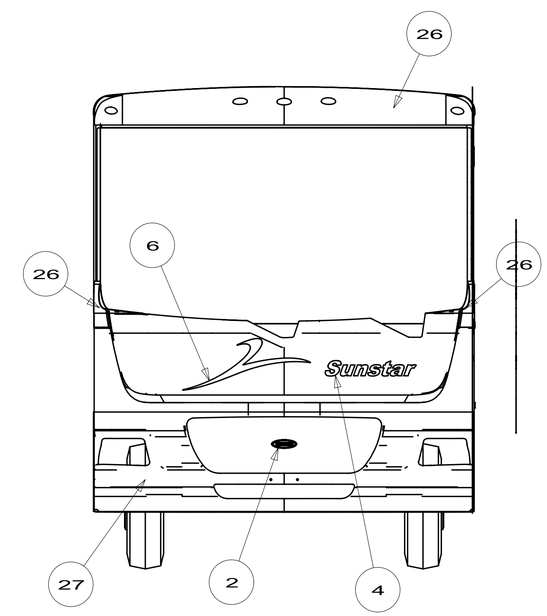

FIRST USED	10 E29R (SUNSTAR)
	DO NOT SCALE DRAWING
TITLE:	GRAPHICS INSTALLATION
SHEET 2	PART NO. 172338 REV

10/21/2009

RELEASE A 10--16--08 171747

DWG NO	UNIT		
171747-01	E26P	PAINTMASK KIT	PAINTMASK-REFRIG VENT
		171644-01	---
171747-02	E29R	171644-04	165266-02 (2)
171747-03	E30W	171644-02	---
171747-04	E32K	171644-03	165266-02 (2)

UP TO 11-08-09

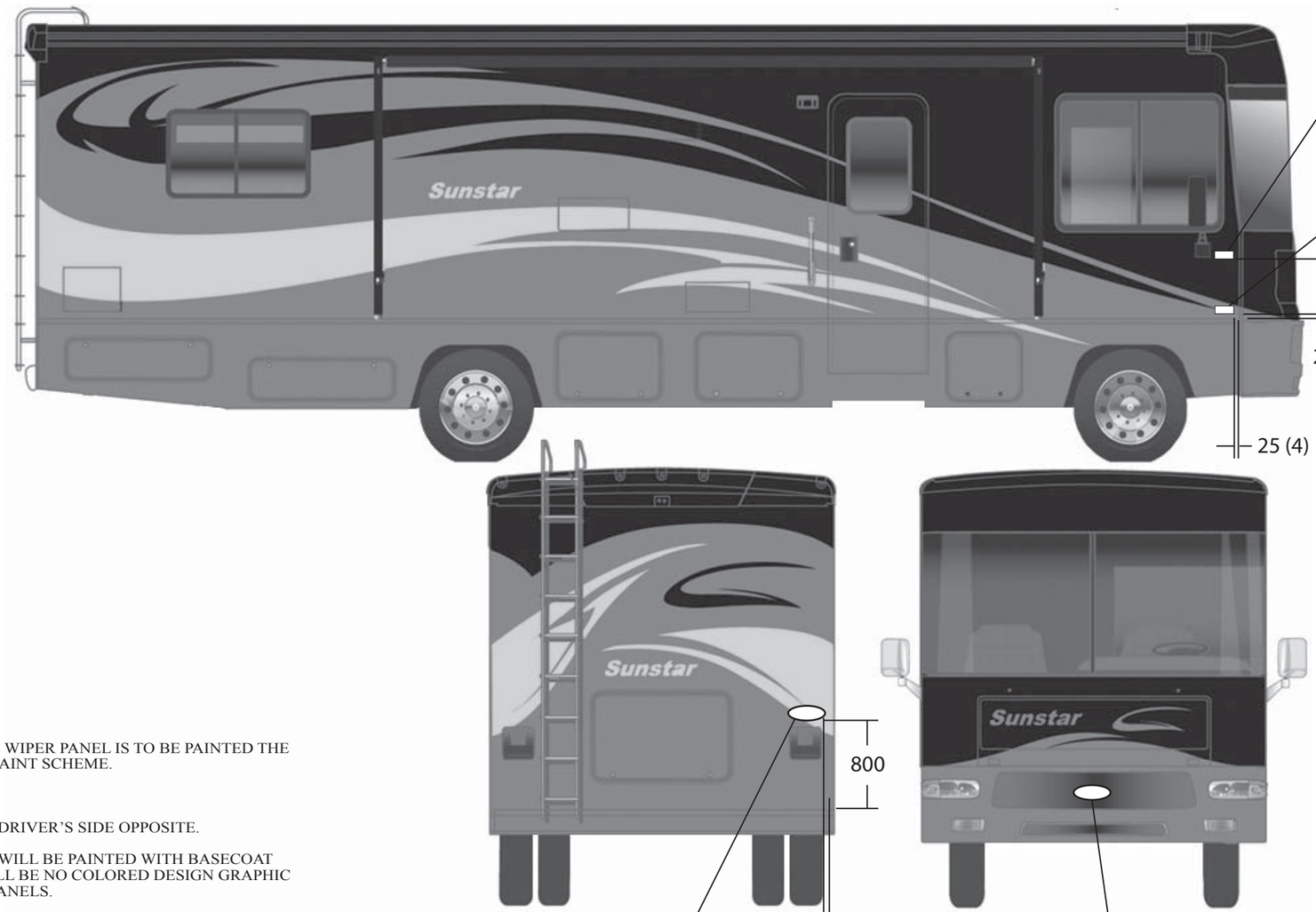

(1PR) WORKHORSE 22,000#-19.5 TIRE
(1PE) WORKHORSE 20,500 DSL 230 HP
(16K) FORD CHASSIS 22,000
(16H) FORD CHASSIS 18,000#/V10 ENG
(16N) FORD CHASSIS-16,000 LB. GVWR
(27A) EXT FULL BODY PAINT PKG #1
(92A) EXT FULL BODY PAINT PKG #2
(24C) EXT FULL BODY PAINT PKG #3
(24B) EXT FULL BODY PAINT PKG #4

NOTES:

10. BLACK PLASTIC ABS WINDSHIELD WIPER PANEL IS TO BE PAINTED THE CORRESPONDING COLOR IN THE PAINT SCHEME.

9 CENTER ON UNIT.

8. PASSENGER SIDE OF UNIT SHOWN, DRIVER'S SIDE OPPOSITE.

7. END PANELS OF SLIDEOUT ROOMS WILL BE PAINTED WITH BASECOAT AND CLEAR COAT ONLY. THERE WILL BE NO COLORED DESIGN GRAPHIC ELEMENTS PAINTED ON THE END PANELS.

6. APPLY SEALER BODY SEAM CLEAR 94401-04-000 TO HELP SECURE EDGES.

5. USE 1744-01-000 (100 FT) TO COVER UNSEALED ROOF SEAMS.

4. CLEAR COAT TO BE APPLIED ON ENTIRE UNIT TO PROTECT PAINT.

3. TOLERANCE FOR DIMENSIONS IS +/-20mm.
LOGO IS TO BE +/- 1mm ON A HORIZONTAL PLANE (END TO END).

2. APPLY FILM-URETHANE PROTECTANT 109506-01-000 AT BOTTOM OF ENTRANCE DOOR TO PREVENT SCUFFMARKS.

1. APPLY PROTECTOR 116424-01-000 TO WATER HEATER DOOR LATCH.

COPYRIGHT 2009
WINNEBAGO
INDUSTRIES, INC.

10 E SER
(SUNSTAR)

GRAPHICS INSTL - FBP

1 2 REV

REF PART NO 171747

10/06/09

DWG NO 171747

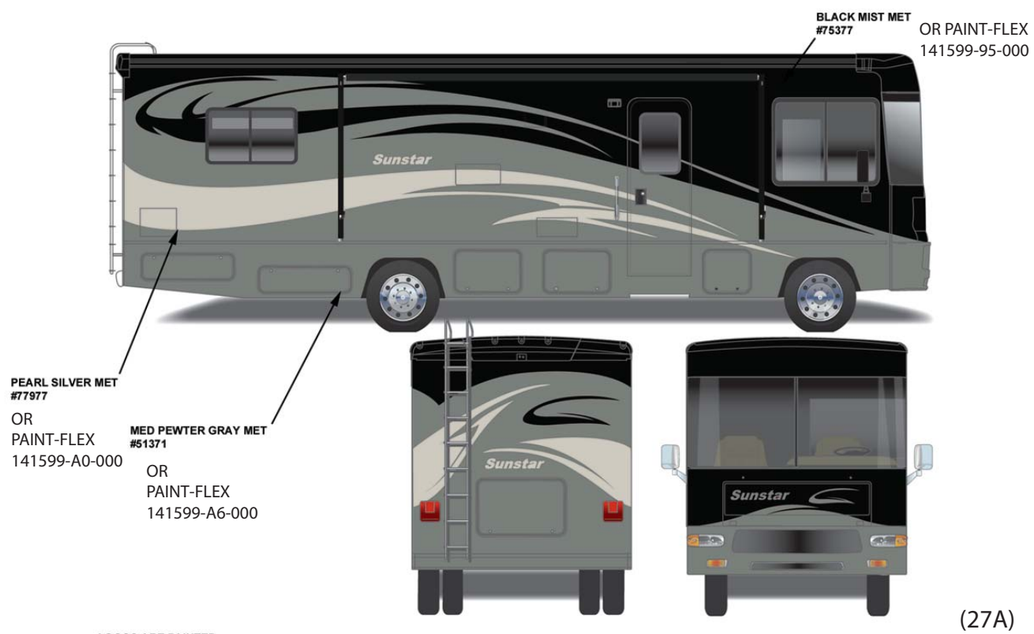

LOGOS ARE PAINTED

(27A)

GRAPHICS INST - 2009 SUNSTAR FBP - STEEL GRAY

LOGOS ARE PAINTED

(92A)

GRAPHICS INST - 2010 SUNSTAR FBP - VINTAGE RED

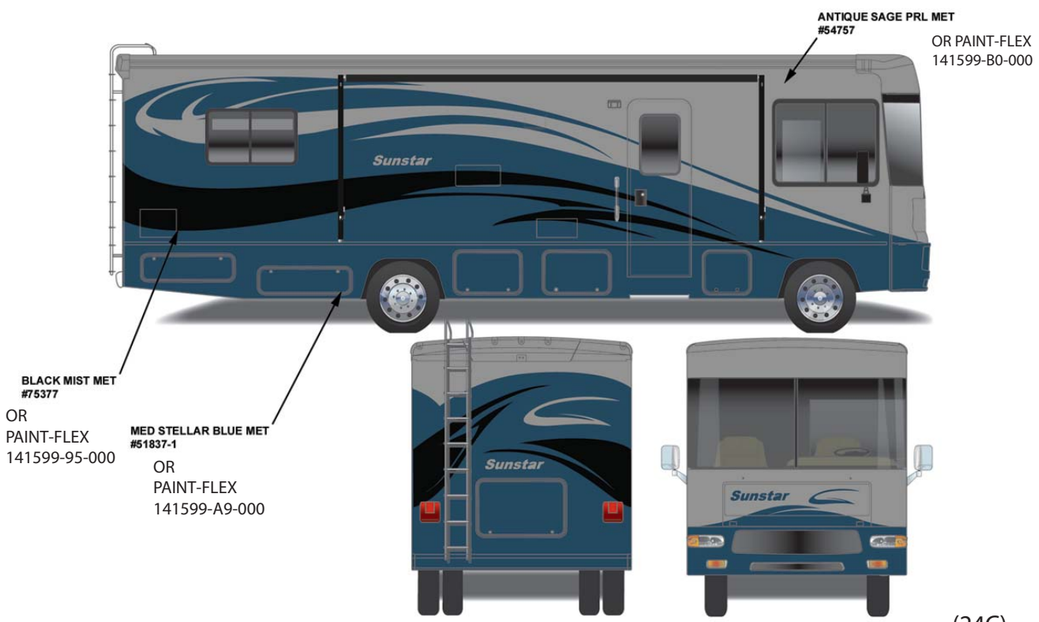

LOGOS ARE PAINTED

(24C)

GRAPHICS INST - 2009 SUNSTAR FBP - STELLAR BLUE

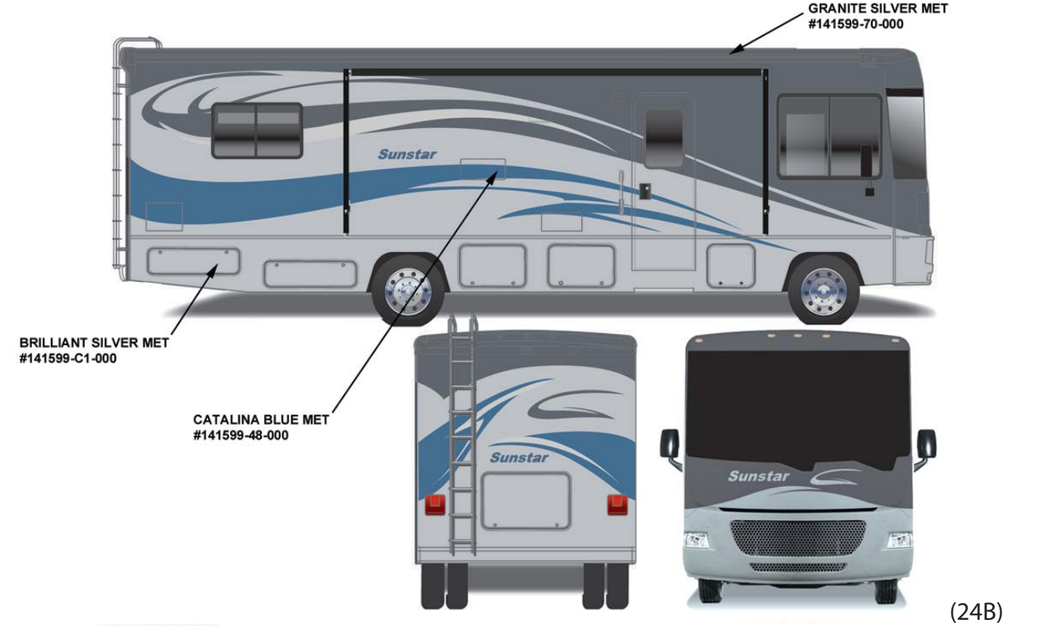

LOGOS ARE PAINTED

(24B)

GRAPHICS INST - 2010 SUNSTAR FBP - CATALINA BLUE

FIRST USED	2010 E-SERIES (SUNSTAR)
	SPECIFICATION PRINT DO NOT SCALE
TITLE	GRAPHICS INSTL - FBP
SHEET 2	PART NO 171747 / REV

DWG NO	UNIT	A	B	C	D
171747-01	E26P	.	.	.	.
171747-02	E29R	.	.	.	.
171747-03	E30W	.	.	.	.
171747-04	E32K	.	.	.	.

RELEASE	REV A	DATE 10--16--08	DWG NO 171747

REV	ZONE	REVISION RECORD	DATE	DFTR-ORIG

AFTER 11-09-09

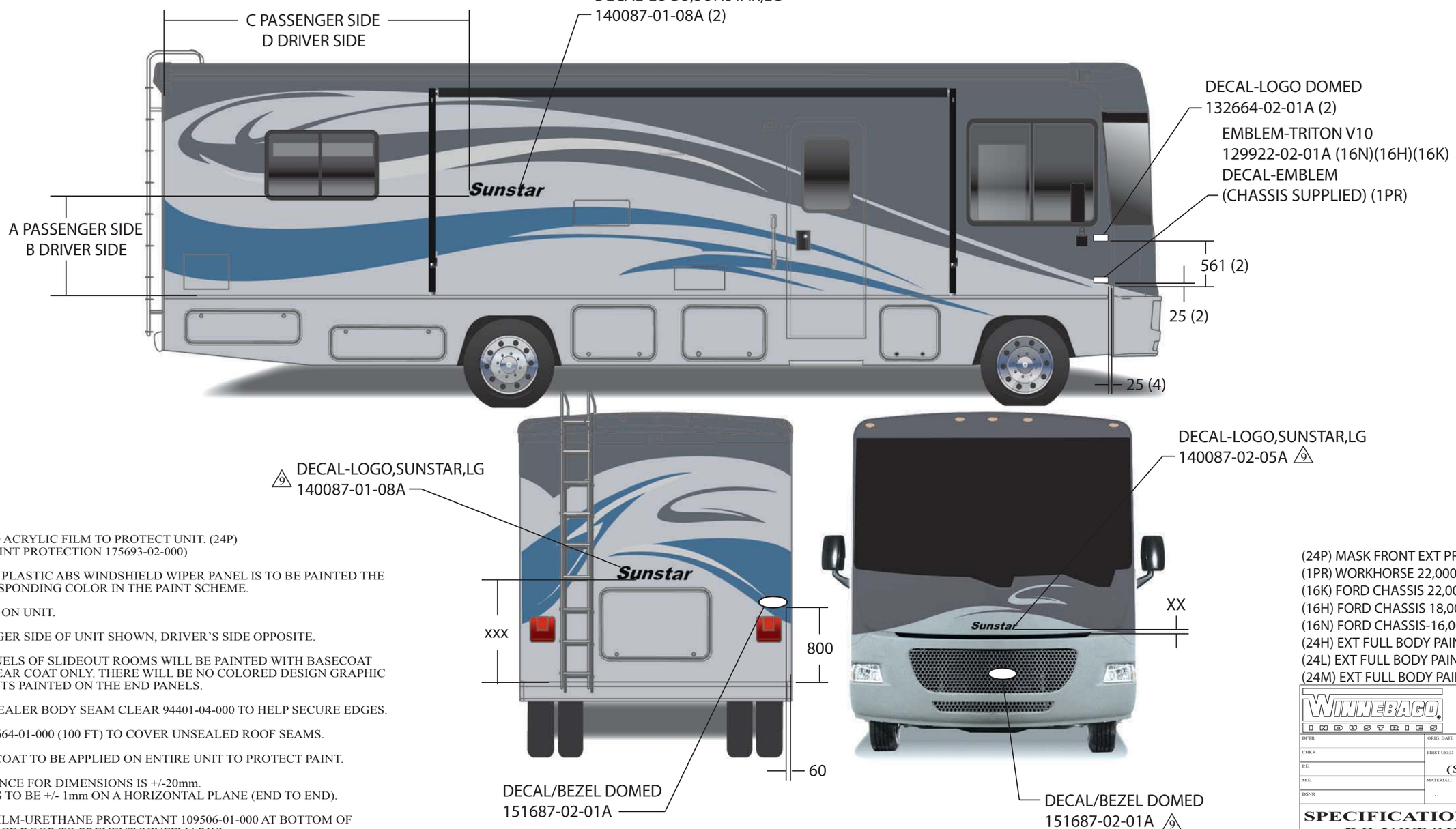

NOTES:

11. DUE TO ACRYLIC FILM TO PROTECT UNIT. (24P)
(KIT-PAINT PROTECTION 175693-02-000)

10. BLACK PLASTIC ABS WINDSHIELD WIPER PANEL IS TO BE PAINTED THE CORRESPONDING COLOR IN THE PAINT SCHEME.

9 CENTER ON UNIT.

8. PASSENGER SIDE OF UNIT SHOWN, DRIVER'S SIDE OPPOSITE.

7. END PANELS OF SLIDEOUT ROOMS WILL BE PAINTED WITH BASECOAT AND CLEAR COAT ONLY. THERE WILL BE NO COLORED DESIGN GRAPHIC ELEMENTS PAINTED ON THE END PANELS.

6. APPLY SEALER BODY SEAM CLEAR 94401-04-000 TO HELP SECURE EDGES.

5. USE 174664-01-000 (100 FT) TO COVER UNSEALED ROOF SEAMS.

4. CLEAR COAT TO BE APPLIED ON ENTIRE UNIT TO PROTECT PAINT.

3. TOLERANCE FOR DIMENSIONS IS +/-20mm.
LOGO IS TO BE +/- 1mm ON A HORIZONTAL PLANE (END TO END).

2. APPLY FILM-URETHANE PROTECTANT 109506-01-000 AT BOTTOM OF ENTRANCE DOOR TO PREVENT SCUFFMARKS.

1. APPLY PROTECTOR 116424-01-000 TO WATER HEATER DOOR LATCH.

(24P) MASK FRONT EXT PROTECTIVE
(1PR) WORKHORSE 22,000#-19.5 TIRE
(16K) FORD CHASSIS 22,000
(16H) FORD CHASSIS 18,000#/V10 ENG
(16N) FORD CHASSIS-16,000 LB. GVWR
(24H) EXT FULL BODY PAINT PKG #5
(24L) EXT FULL BODY PAINT PKG #6
(24M) EXT FULL BODY PAINT PKG #7

WINNEBAGO INDUSTRIES

COPYRIGHT 2010
WINNEBAGO
INDUSTRIES, INC.

DFTR	ORIG. DATE 10/15/08
CHKR	FIRST USED 10 E SER (SUNSTAR)
P.E.	
M.E.	MATERIAL: .
DSNR	

SPECIFICATION PRINT
DO NOT SCALE

TITLE: GRAPHICS INSTL - FBP

SHEET 1 OF 2 | PART NO 171747 | REV | REF

02/23/10

DWG NO 171747

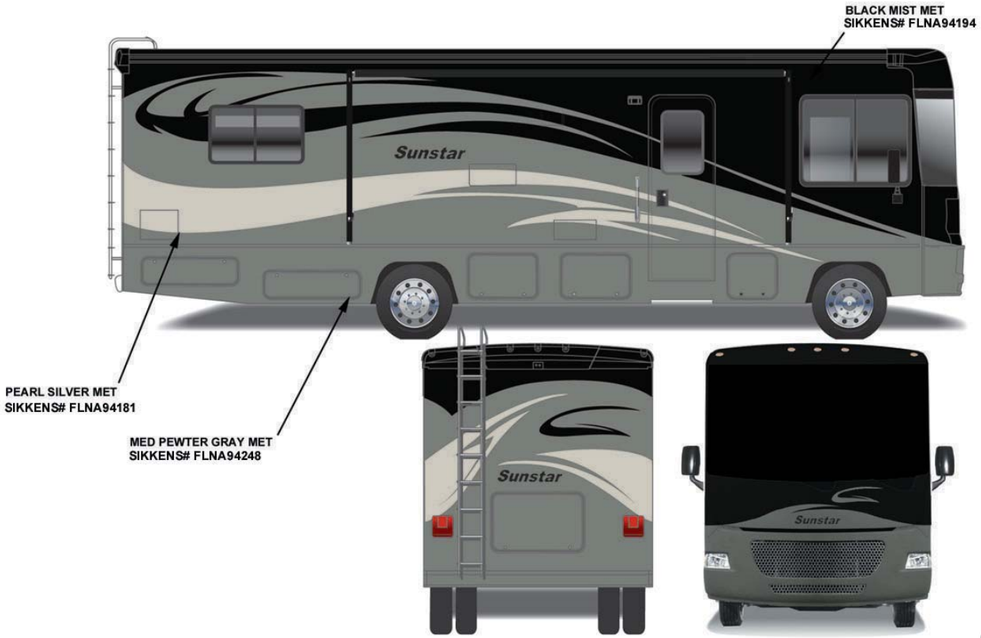

(24H)

GRAPHICS INST - 2010 SUNSTAR FBP - STEEL GRAY

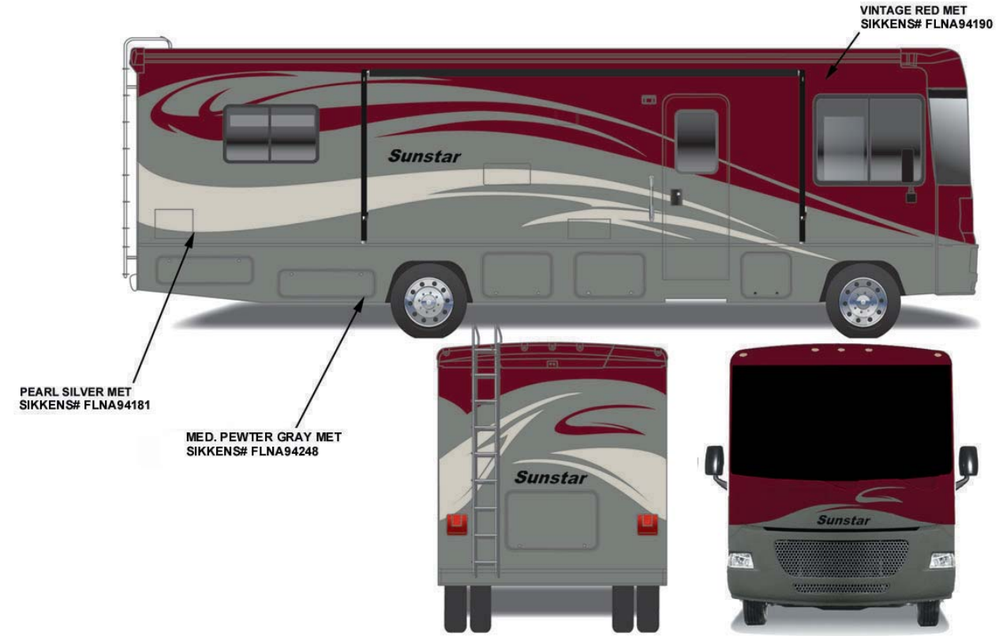

(24L)

GRAPHICS INST - 2010 SUNSTAR FBP - VINTAGE RED

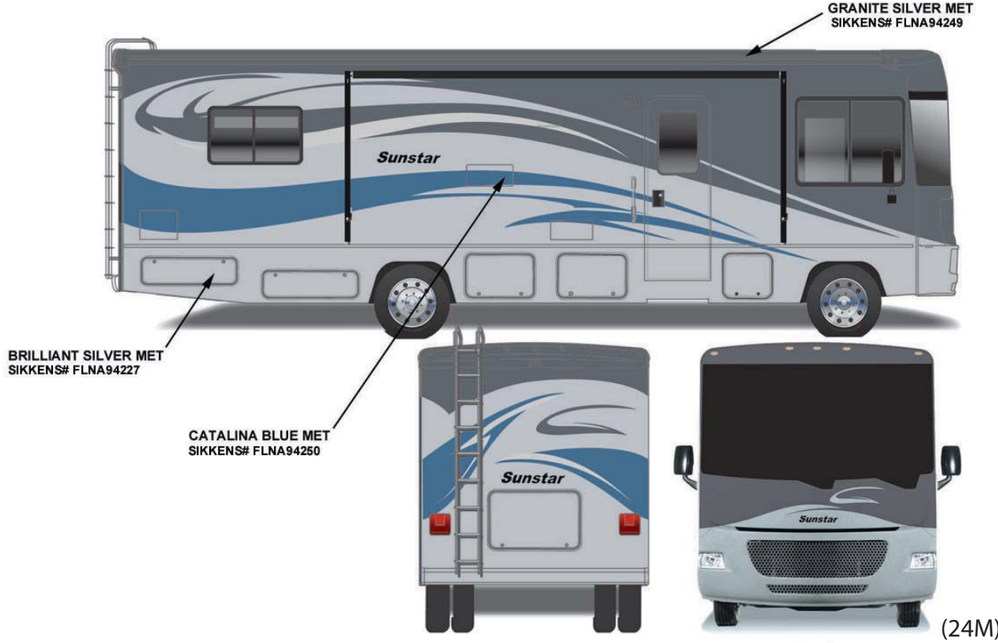

(24M)

GRAPHICS INST - 2010 SUNSTAR FBP - CATALINA BLUE

FIRST USED	2010 E-SERIES (SUNSTAR)
	SPECIFICATION PRINT DO NOT SCALE
TITLE:	GRAPHICS INSTL - FBP
SHEET 2	PART NO 171747 / REV P

DWG NO	UNIT	SHEET
172337-01	E29R	1,2
172337-02	E32K	1,3
172337-03	E26P	1,4
172337-04	E30W	1,5

RELEASE	REV A	DATE	DWG NO 172337

REV	ZONE	REVISION RECORD	DATE	DFTR-ORIG

KEY	PART NUMBER (27G)		DESCRIPTION
1	120702-03-66A		DECAL-WINNEBAGO
2	132664-02-01A		DECAL-LOGO DOMED WINNEBAGO
3	135381-02-16A		DECAL-W
4	151687-01-01A		DECAL-DOMED NAMEPLATE WINNEBAGO
5	140086-01-05A		DECAL-VISTA, LG
6	140086-02-05A		DECAL-VISTA, SML
7	129922-02-01A (16N)(16H)(16K) CHASSIS SUPPLIED (1PE)(1PR)		DECAL-EMBLEM TRITON V-10 DECAL-EMBLEM
8	172314-01-01A		DECAL-SWEEP HOOD/BACKWALL
9	172315-01-01A		DECAL-SWEEP #1, RH
10	172315-02-01A		DECAL-SWEEP #1, LH
11	172316-01-01A		DECAL-SWEEP #2, RH
12	172316-02-01A		DECAL-SWEEP #2, LH
13	172317-01-01A		DECAL-SWEEP #3, RH
14	172317-02-01A		DECAL-SWEEP #3, LH
15	172318-01-01A		DECAL-SWEEP #4, RH
16	172318-02-01A		DECAL-SWEEP #4, LH
17	172319-01-01A		DECAL-SWEEP #5, RH
18	172319-02-01A		DECAL-SWEEP #5, LH
19	172320-01-01A		DECAL-SWEEP #6, RH
20	172320-02-01A		DECAL-SWEEP #6, LH
21	172321-01-01A		DECAL-HOOK, RH
22	172321-02-01A		DECAL-HOOK, LH
23	172386-01-01A (26F)(26H)		PAINT MASK-MID SIDEWALL, RH
24	172386-02-01A (26F)(26H)		PAINT MASK-MID SIDEWALL, LH
25	141599-A1-000 (26F)	141599-B8-000 (26H)	PAINT
26	141599-A3-000 (26F)	141599-88-000 (26H)	PAINT
27	165266-02-01A (26F)(26H)		PAINT MASK-REFRIG VENT
28	165266-01-01A (26F)(26H)		PAINT MASK-REFRIG VENT
29	174114-01-01A (26F)(26H)		PAINT MASK-MID BACKWALL

(1PR) WORKHORSE 22,000#-19.5 TIRE
(1PE) WORKHORSE 20,500 DSL 230HP
(16K) FORD CHASSIS 22,000
(16H) FORD CHASSIS 18,000#/V10 ENG
(16N) FORD CHASSIS-16,000 LB. GVWR
(26H) EXT GRAPHIC/PAINT-DLX PKG 2
(26F) EXT GRAPHIC/PAINT DLX PKG 1
(27G) EXTERIOR GRAPHICS PACKAGE #1

NOTES:

6 CENTER ON SURFACE.

5. VINYL DECAL WILL BE APPLIED WHERE EVER GRAPHIC DESIGN PATTERN IS POSITIONED OVER SLIDEROOM EXTRUSION, BUT WILL NOT BE APPLIED TO VINYL SCREW COVER INSERT.

4. ALL LOGOS ARE TO BE +/- 1mm ON A HORIZONTAL PLANE (END TO END).

3. CLEAR COAT 141599-C2-000 TO BE APPLIED ON ALL PAINTED AREAS.

2. APPLY FILM-URETHANE PROTECTANT 109506-01-000 AT BOTTOM OF ENTRANCE DOOR TO PREVENT SCUFFMARKS.

1. APPLY PROTECTOR 116424-01-000 TO WATER HEATER DOOR LATCH.

SEE CHART
FOR COLOR VARIATIONS OF THIS PART

WINNEBAGO INDUSTRIES

COPYRIGHT 2009
WINNEBAGO
INDUSTRIES, INC.

DFTR | ORIG. DATE
CHKR | ALL DIMENSIONS ARE IN MILLIMETERS
P.E.
M.E. | FIRST USED: 10 E SERIES (VISTA)
DSNR

UNSPECIFIED TOLERANCES ARE:
WHOLE DIM (X) : 20
ONE-PLACE (X.X) : 10
TWO-PLACE (X.XX) : -
ANGLE : -

THIRD ANGLE PROJECTION

MATERIAL:

DO NOT SCALE DRAWING

TITLE: GRAPHICS INSTALLATION

SHEET 1 OF 5 | PART NO 172337 | REV

REF: 1

10/21/2009

DWG NO 172337

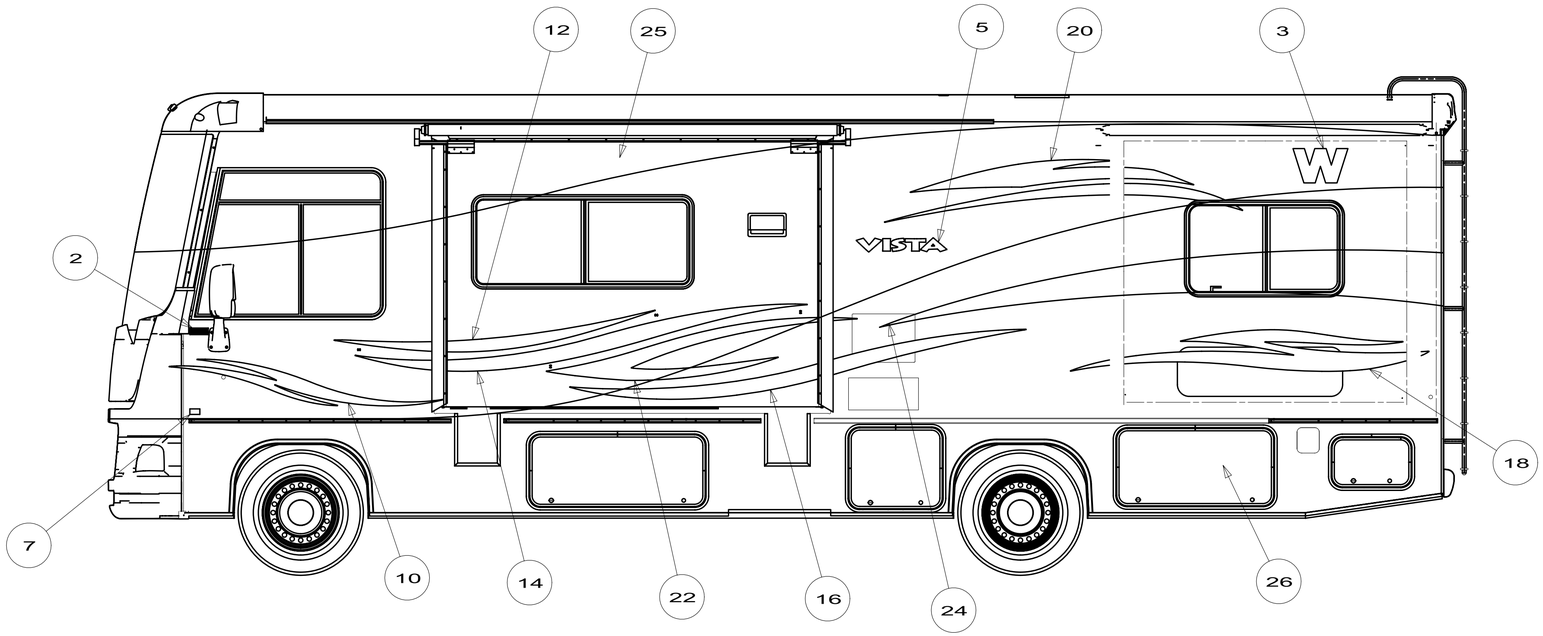

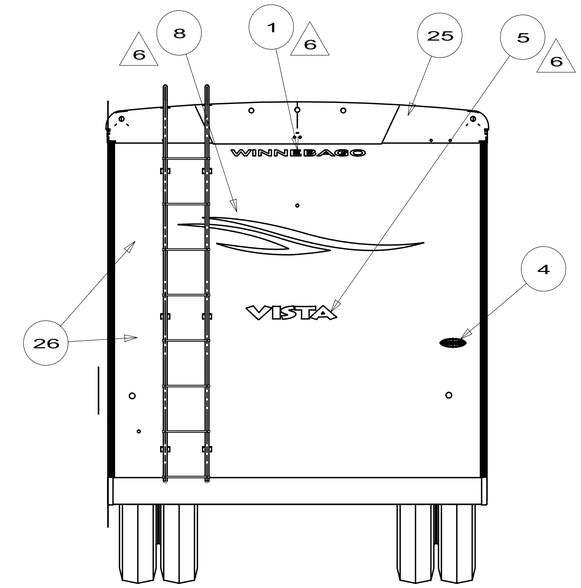

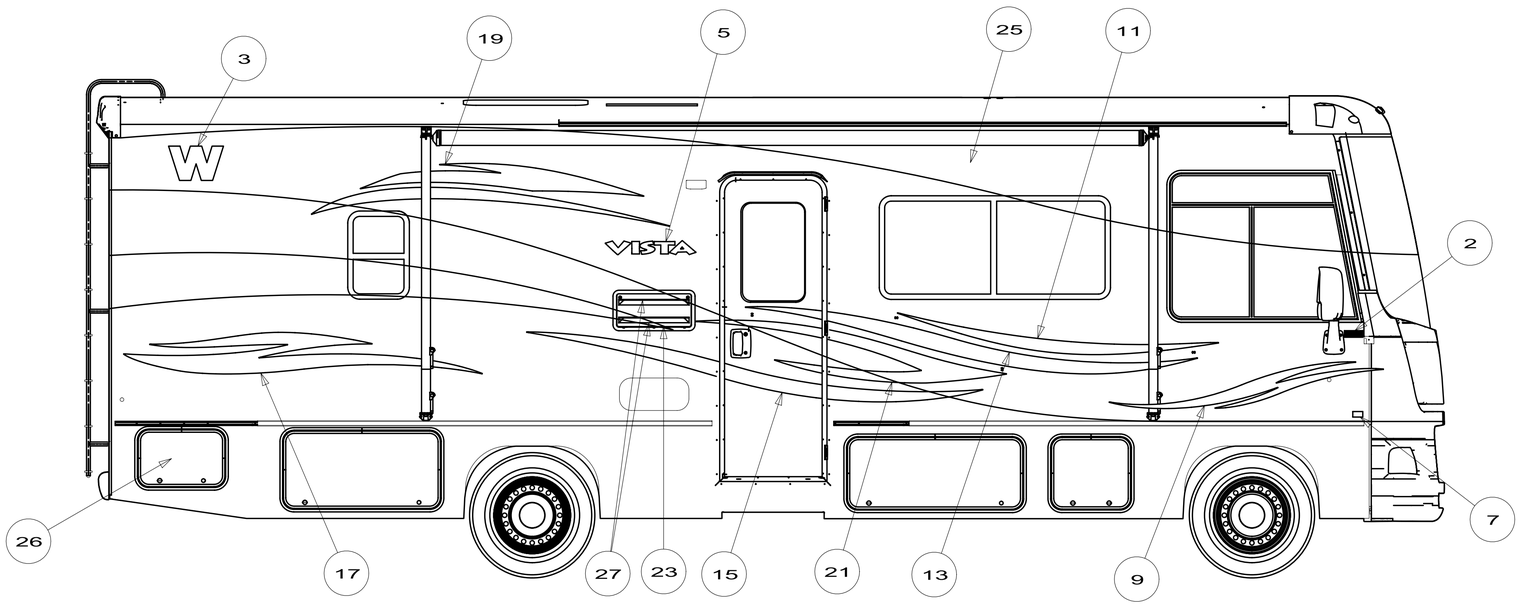

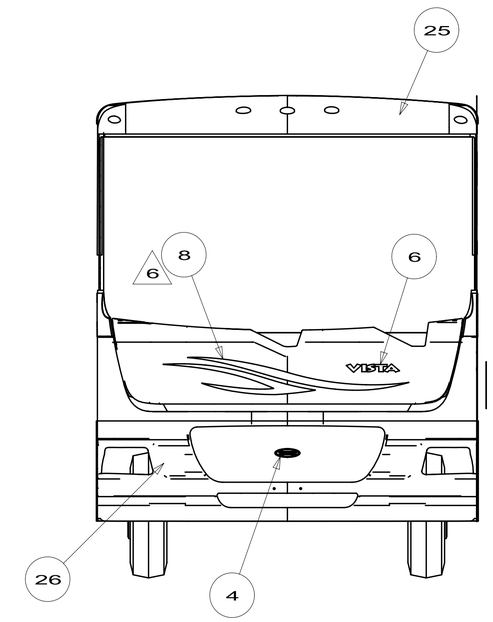

FIRST USED	10 E29R (VISTA)
	DO NOT SCALE DRAWING
TITLE:	GRAPHICS INSTALLATION
SHEET 2	PART NO 172337 REV

10/21/2009

DWG NO	UNIT	PAINTMASK KIT	PAINTMASK-REFRIG VENT
171746-01	E26P	171643-01	---
171746-02	E29R	171643-04	165266-02 (2)
171746-03	E30W	171643-02	---
171746-04	E32K	171643-03	165266-02 (2)

RELEASE	REV	DATE	DWG NO
	A	10--16--08	171746

REV	ZONE	REVISION RECORD	DATE	DFTR-ORIG

UP TO 11-08-09

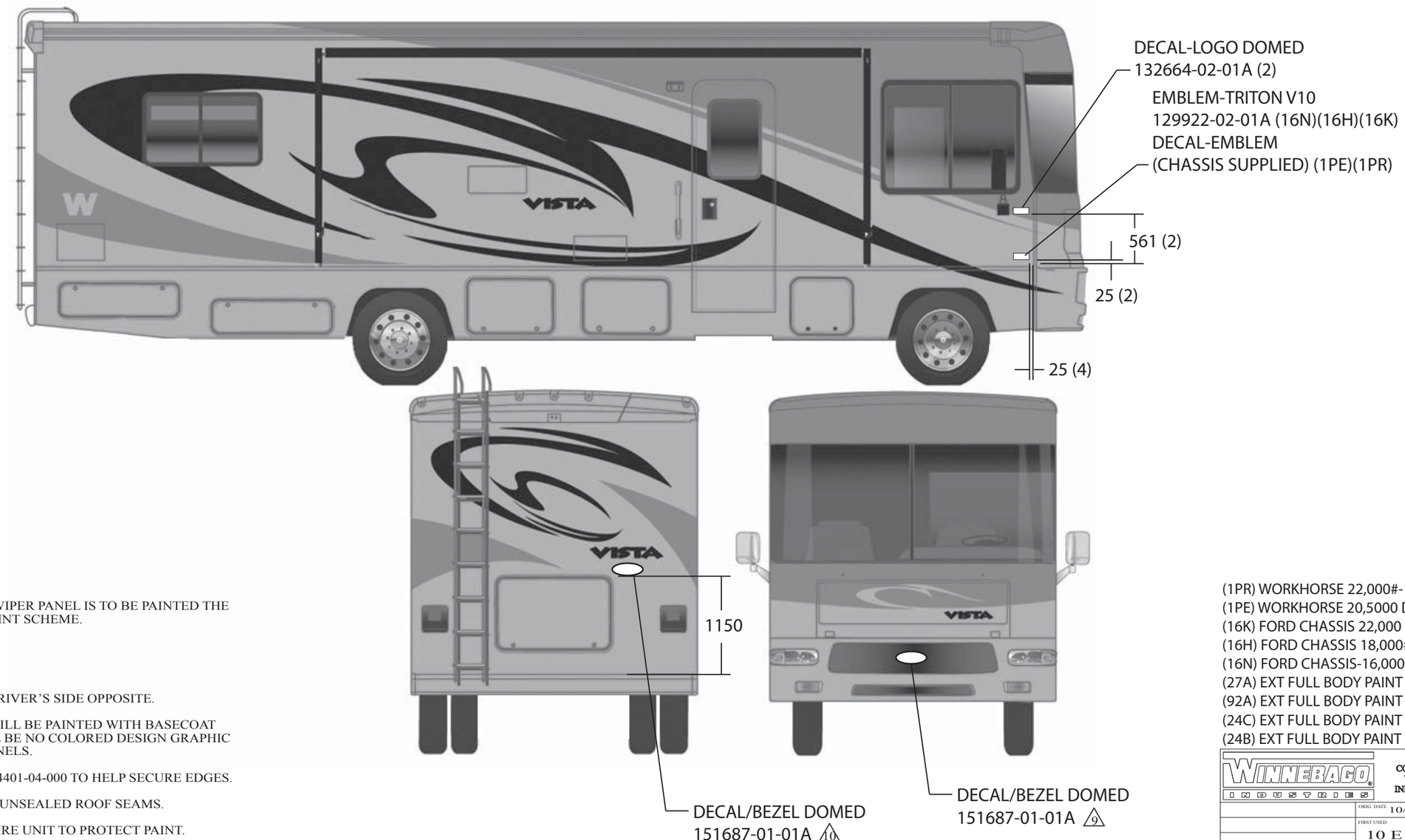

11. BLACK PLASTIC ABS WINDSHIELD WIPER PANEL IS TO BE PAINTED THE CORRESPONDING COLOR IN THE PAINT SCHEME.

10 CENTER UNDER LOGO.

9 CENTER ON UNIT.

8. PASSENGER SIDE OF UNIT SHOWN, DRIVER'S SIDE OPPOSITE.

7. END PANELS OF SLIDEOUT ROOMS WILL BE PAINTED WITH BASECOAT AND CLEAR COAT ONLY. THERE WILL BE NO COLORED DESIGN GRAPHIC ELEMENTS PAINTED ON THE END PANELS.

6. APPLY SEALER BODY SEAM CLEAR 94401-04-000 TO HELP SECURE EDGES.

5. USE 174664-01-000 (100 FT) TO COVER UNSEALED ROOF SEAMS.

4. CLEAR COAT TO BE APPLIED ON ENTIRE UNIT TO PROTECT PAINT.

3. TOLERANCE FOR DIMENSIONS IS +/-20mm.
LOGO IS TO BE +/- 1mm ON A HORIZONTAL PLANE (END TO END).

2. APPLY FILM-URETHANE PROTECTANT 109506-01-000 AT BOTTOM OF ENTRANCE DOOR TO PREVENT SCUFFMARKS.

1. APPLY PROTECTOR 116424-01-000 TO WATER HEATER DOOR LATCH.

NOTES:

(1PR) WORKHORSE 22,000#-19.5 TIRE
(1PE) WORKHORSE 20,5000 DSL 230HP
(16K) FORD CHASSIS 22,000
(16H) FORD CHASSIS 18,000#/V10 ENG
(16N) FORD CHASSIS-16,000 LB. GVWR
(27A) EXT FULL BODY PAINT PKG #1
(92A) EXT FULL BODY PAINT PKG #2
(24C) EXT FULL BODY PAINT PKG #3
(24B) EXT FULL BODY PAINT PKG #4

WINNEBAGO INDUSTRIES

COPYRIGHT 2009
WINNEBAGO
INDUSTRIES, INC.

ORIG. DATE 10/15/08
FIRST USED 10 E (VISTA)
MATERIAL: .

SPECIFICATION PRINT
DO NOT SCALE

TITLE: GRAPHICS INSTL - FBP

SHEET 1 OF 2 | PART NO 171746 | REV | REF 1

11/18/09

DWG NO 171746

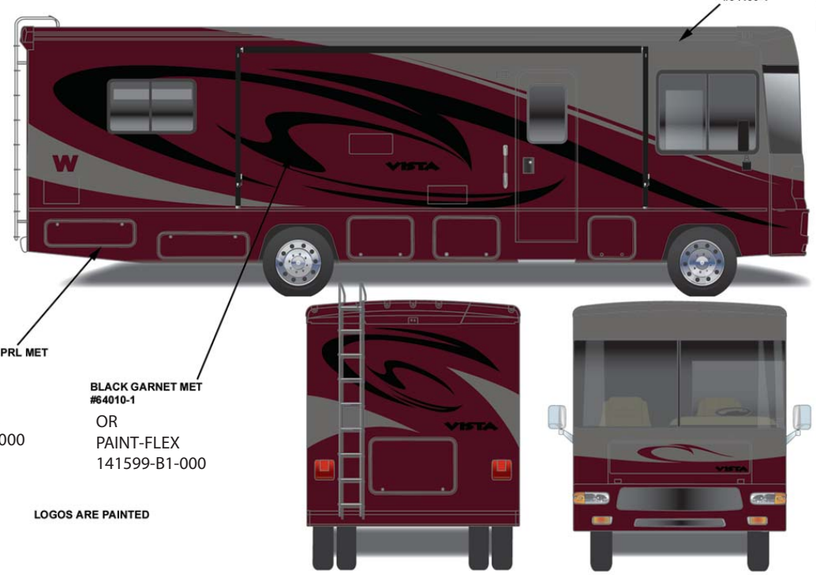

(27A)

GRAPHICS INST - 2009 VISTA FBP - RADIANT RUBY

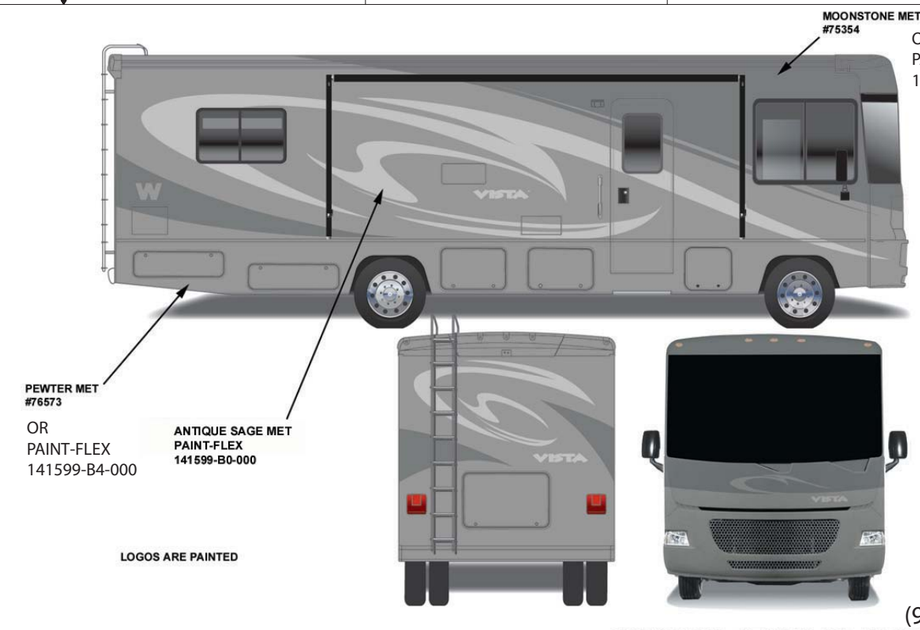

UP TO 11-08-09

(92A)

GRAPHICS INST - 2010 VISTA FBP - MOONSTONE

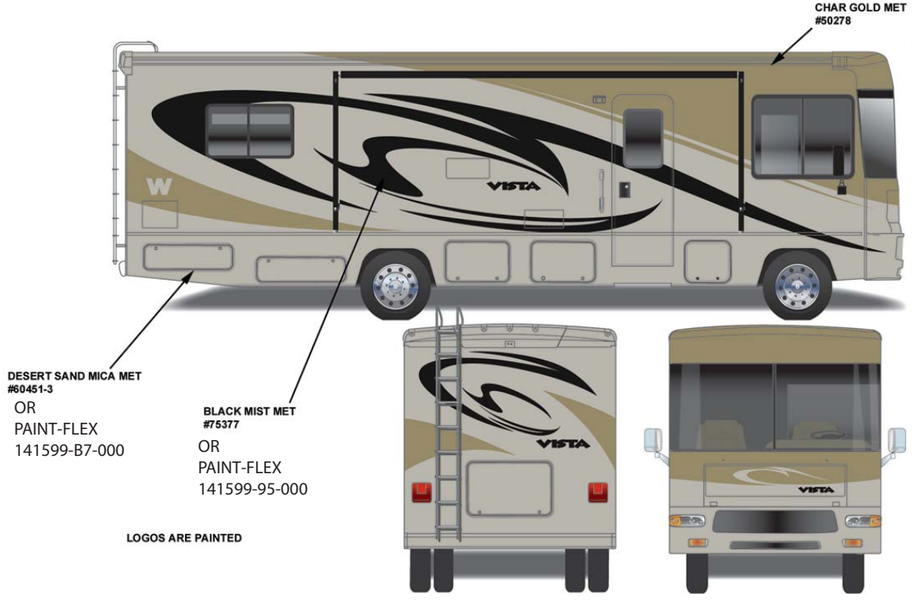

(24C)

GRAPHICS INST - 2009 VISTA FBP - GOLDEN STONE

(24B)

GRAPHICS INST - 2010 VISTA FBP - MOJAVE

FIRST USED	2010 E-SERIES (VISTA)
	SPECIFICATION PRINT DO NOT SCALE
TITLE	GRAPHICS INSTL - FBP
SHEET 2	PART NO 171746 / REV

DWG NO	UNIT	A	B	C	D
171746-01	E26P	230	230	256	256
171746-02	E29R	---	---	---	---
171746-03	E30W	1194	1219	2896	1905
171746-04	E32K	1045	1245	1540	1945

RELEASE | REV A | DATE 10--16--08 | DWG NO 171746
REV ZONE | REVISION RECORD | DATE | DFTR-ORIG

AFTER 11-09-09

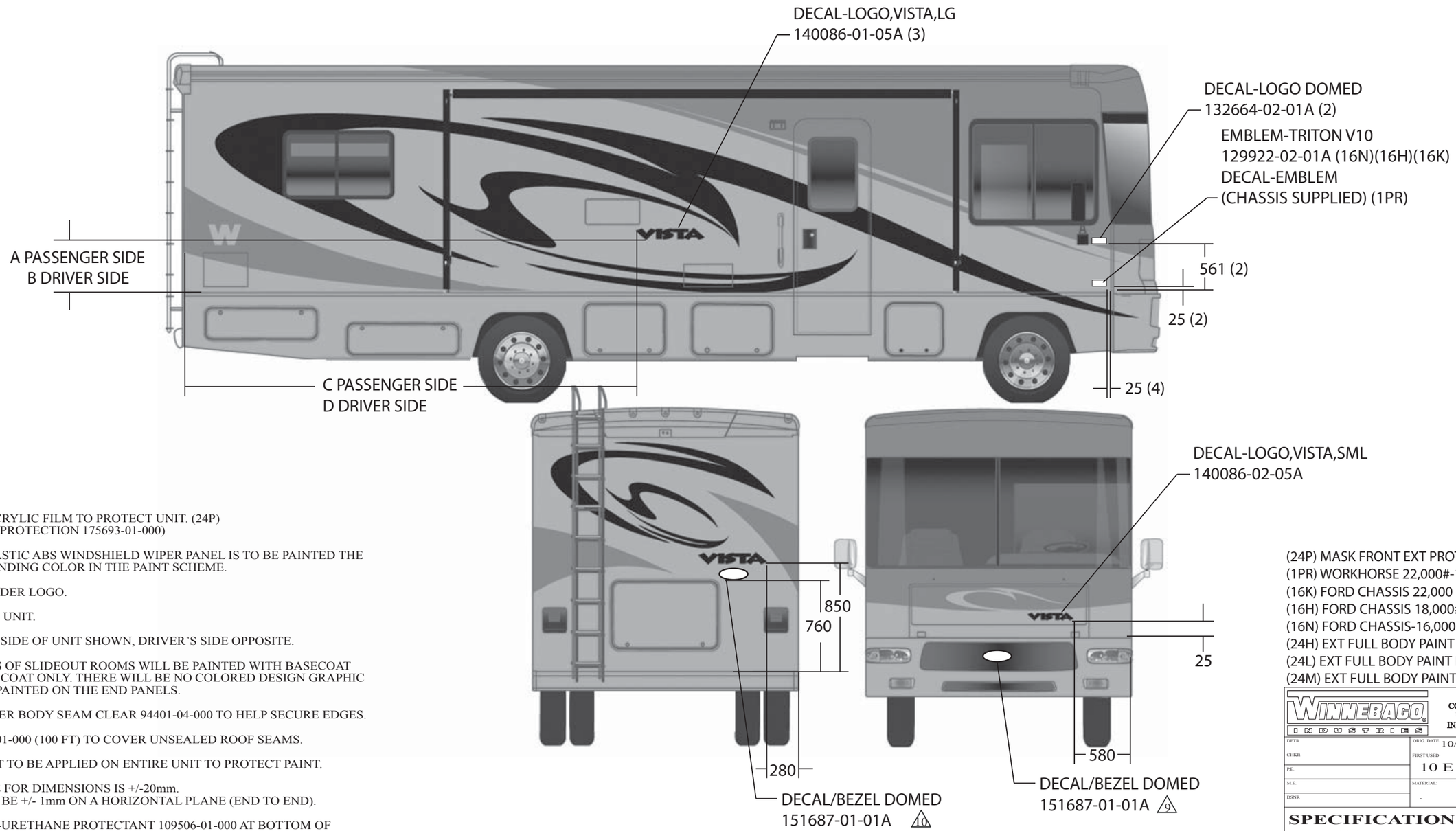

12. DIE CUT ACRYLIC FILM TO PROTECT UNIT. (24P)
(KIT-PAINT PROTECTION 175693-01-000)

11. BLACK PLASTIC ABS WINDSHIELD WIPER PANEL IS TO BE PAINTED THE CORRESPONDING COLOR IN THE PAINT SCHEME.

10 CENTER UNDER LOGO.

9 CENTER ON UNIT.

8. PASSENGER SIDE OF UNIT SHOWN, DRIVER'S SIDE OPPOSITE.

7. END PANELS OF SLIDEOUT ROOMS WILL BE PAINTED WITH BASECOAT AND CLEAR COAT ONLY. THERE WILL BE NO COLORED DESIGN GRAPHIC ELEMENTS PAINTED ON THE END PANELS.

6. APPLY SEALER BODY SEAM CLEAR 94401-04-000 TO HELP SECURE EDGES.

5. USE 174664-01-000 (100 FT) TO COVER UNSEALED ROOF SEAMS.

4. CLEAR COAT TO BE APPLIED ON ENTIRE UNIT TO PROTECT PAINT.

3. TOLERANCE FOR DIMENSIONS IS +/-20mm.
LOGO IS TO BE +/- 1mm ON A HORIZONTAL PLANE (END TO END).

2. APPLY FILM-URETHANE PROTECTANT 109506-01-000 AT BOTTOM OF ENTRANCE DOOR TO PREVENT SCUFFMARKS.

1. APPLY PROTECTOR 116424-01-000 TO WATER HEATER DOOR LATCH.

NOTES:

(24P) MASK FRONT EXT PROTECTIVE
(1PR) WORKHORSE 22,000#-19.5 TIRE
(16K) FORD CHASSIS 22,000
(16H) FORD CHASSIS 18,000#/V10 ENG
(16N) FORD CHASSIS-16,000 LB. GVWR
(24H) EXT FULL BODY PAINT PKG #5
(24L) EXT FULL BODY PAINT PKG #6
(24M) EXT FULL BODY PAINT PKG #7

WINNEBAGO INDUSTRIES

COPYRIGHT 2010
WINNEBAGO
INDUSTRIES, INC.

DFTR | ORIG. DATE 10/15/08
CHKR | FIRST USED 10 E (VISTA)
P.E. | MATERIAL: .
M.E.
DSNR

SPECIFICATION PRINT
DO NOT SCALE

TITLE: GRAPHICS INSTL - FBP

SHEET 1 OF 2 | PART NO 171746 | REV

REF

02/23/10

DWG NO 171746

(24H)

GRAPHICS INST - 2010 VISTA FBP - MOONSTONE

(24L)

GRAPHICS INST - 2010 VISTA FBP - GOLDEN STONE

(24M)

GRAPHICS INST - 2010 VISTA FBP - MOJAVE

FIRST USED	2010 E-SERIES (VISTA)
	SPECIFICATION PRINT DO NOT SCALE
TITLE:	GRAPHICS INSTL - FBP
SHEET 2	PART NO 171746 REV

RELEASE	REV A	DATE	DWG NO 161746

REV	ZONE	REVISION RECORD	DATE	DFTR-ORIG

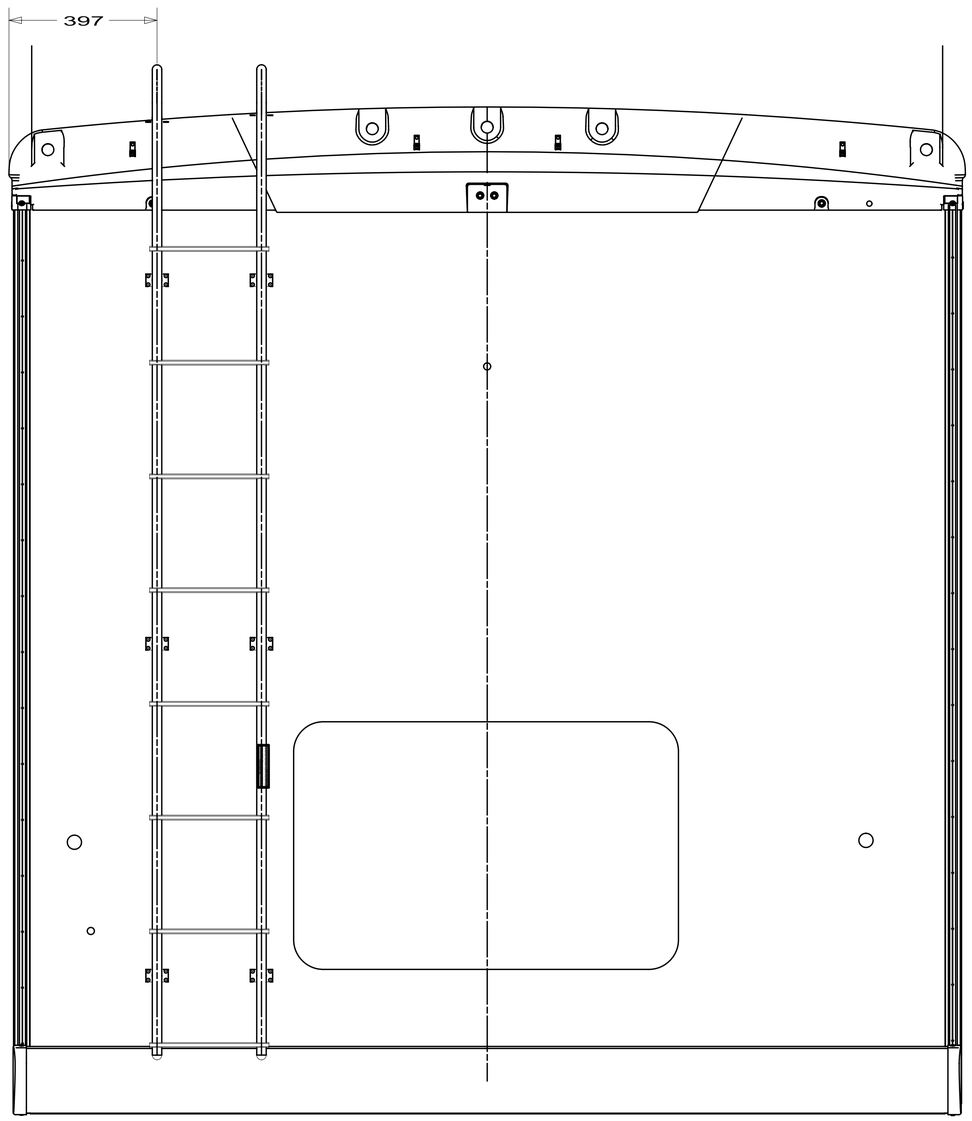

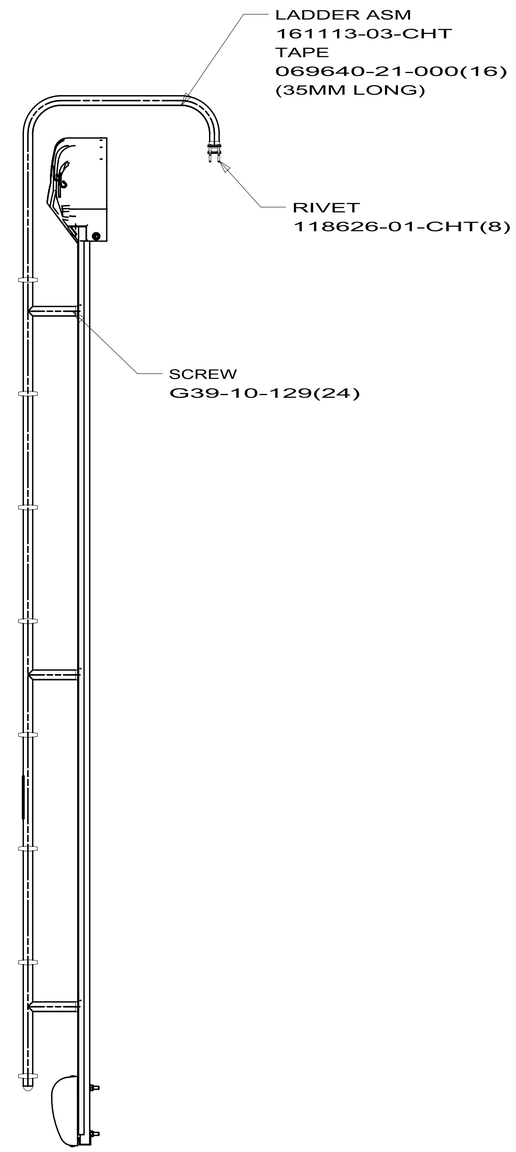

COPYRIGHT 2009
WINNEBAGO
INDUSTRIES, INC.

DFTR	ORIG. DATE
CHKR	ALL DIMENSIONS ARE IN MILLIMETERS
P.E.	
M.E.	FIRST USED
DSNR	07 E-SERIES

UNSPECIFIED TOLERANCES ARE:
WHOLE DIM (X) : 3
ONE-PLACE (X.X) : 1.5
TWO-PLACE (X.XX) :
ANGLE :

MATERIAL:

THIRD ANGLE PROJECTION

DO NOT SCALE DRAWING

TITLE:
LADDER INSTL

SHEET 1 OF 1 | PART NO 161746 | REV

REF: 1

RELEASE	REV A	DATE	DWG NO 171846
REV	ZONE	REVISION RECORD	DATE	DFTR-ORIG

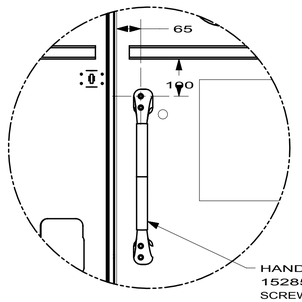

DETAIL A

26H 26F 27G

EXTERIOR GRAPHICS PACKAGE

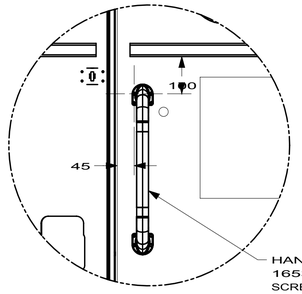

DETAIL A

27A 24C 92A 24H 24L 24M 24B

EXTERIOR FULL BODY PAINT

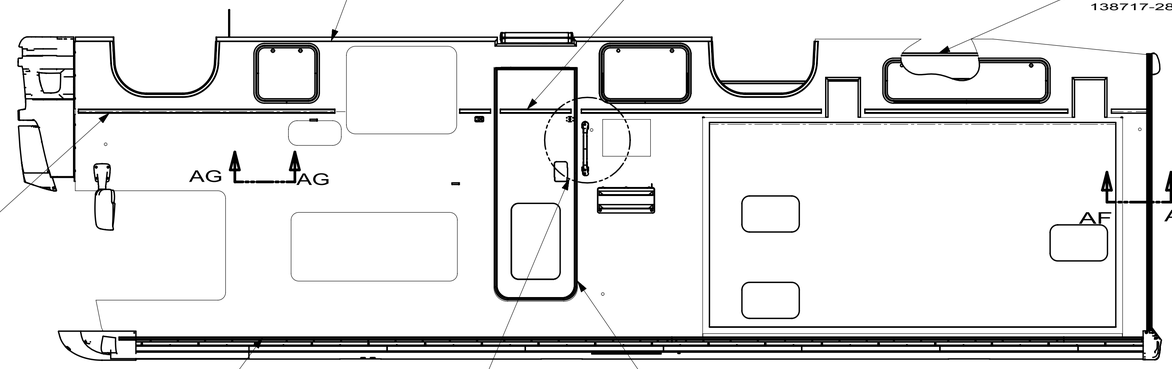

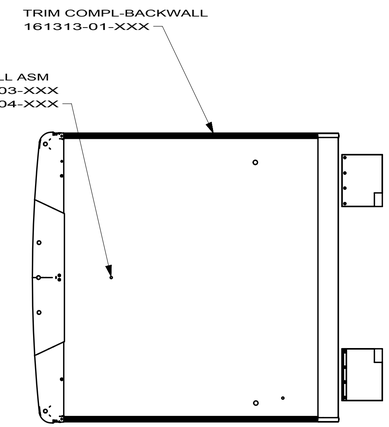

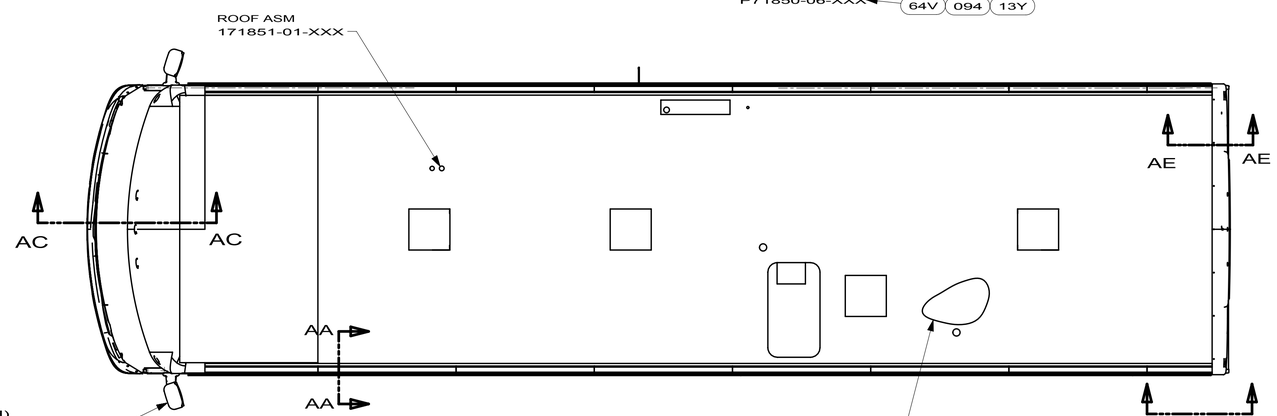

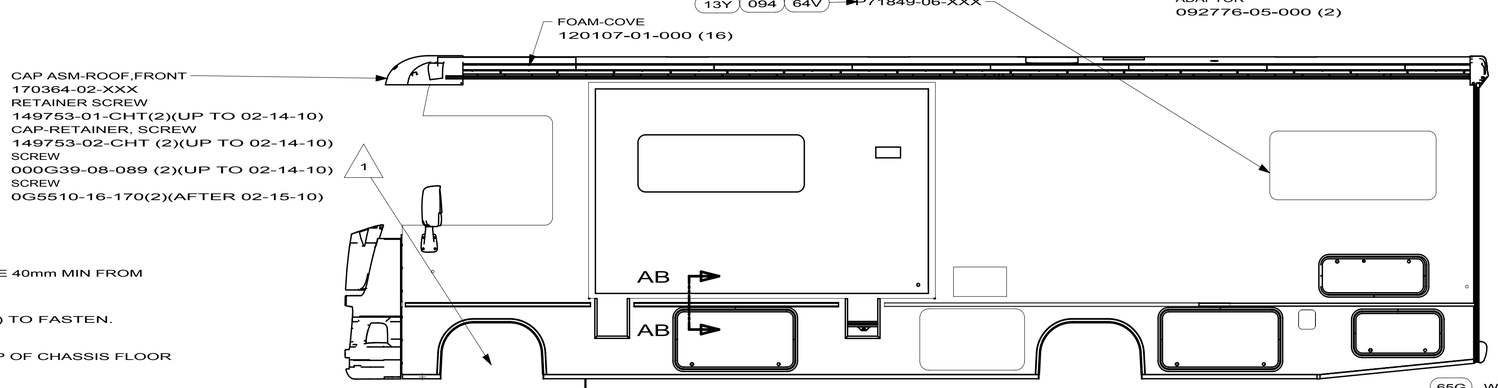

5. MUDFLAP AND/OR ROCKGUARD TO BE 40mm MIN FROM TIRES WHEN INSTALLED.

4. USE SCREWS 000G55-08-20B (110) TO FASTEN.

3. APPLY URETHANE ADHESIVE TO TOP OF CHASSIS FLOOR FRAME STRUCTURE PER ES0077.

2. SEE DRAWING 167602 FOR ALL STANDARD SECTIONS AA-AA THRU AZ-AZ

1. FOR WHEEL COVERS, LINERS, VALVE EXTENSIONS, STABILZERS AND FOR TIGHTENING OF LUG NUTS, SEE SRAWING 116343-01-000.

NOTES:

24B EXTERIOR FULL BODY PAINT #4
24M EXTERIOR FULL BODY PAINT #7
24L EXTERIOR FULL BODY PAINT #6
24H EXTERIOR FULL BODY PAINT #5
92A EXT FULL BODY PAINT PKG # 2
24C EXT FULL BODY PAINT PKG # 3
27G EXTERIOR GRAPHICS PACKAGE #1
27A EXT FULL BODY PAINT PKG #1
64T SIDEWALLS-HIGH GLOSS
64V SIDEWALL-PREMIUM HIGH GLOSS
1G9 FLOORCOVERING-VINYL-FRONT
1A4 LEVELING JACK WITHOUT
513 FLOORCOVERING-VINYL-THRU OUT
60M HYDRAULIC LEVEL JACKS-AUTO
28X MIRRORS-EXTERIOR W/DEFROST
28N MIRRORS-EXTERIOR

65G WINDOW COACH-SINGLE PANE
26H EXT GRAPHIC/PAINT-DLX PKG 2
26F EXT GRAPHIC/PAINT DLX PKG 1
13Y WINDOWS-COACH-DUAL PANE
094 WINDOWS - SE-GI

WINNEBAGO INDUSTRIES
COPYRIGHT 2010
WINNEBAGO
INDUSTRIES, INC.

DFTR	ORIG. DATE
CHKR	ALL DIMENSIONS ARE IN MILLIMETERS
P.E.	
M.E.	FIRST USED
DSNR	10 E32K

UNSPECIFIED TOLERANCES ARE:
WHOLE DIM (X) :
ONE-PLACE (X.X) :
TWO-PLACE (X.XX) :
ANGLE :
THIRD ANGLE PROJECTION

MATERIAL:

DO NOT SCALE DRAWING

TITLE: BODY INSTL-PANEL & TRIM

SHEET 1 OF 1 | PART NO 171846 | REV

REF: 1

2/2/2010

106015-12-01A

KEY	PART NUMBER	U/M	DESCRIPTION	VENDOR NO.
	106015-12-700	EA	MIRROR-FLAT-W/W/O HEAT	709448
	106015-12-701	EA	MIRROR-CONVEX - W/W/O HEAT	709449
	106015-12-702	EA	CAP/SCREW - (PKG OF 4) - BLK	748329 RND
	106015-12-703	EA	CONVEX GLASS/HANDSET/HOUSING	7095892
	106015-19-701	EA	GLASS/FLAT-W/BEZEL/HEAT/ANTI	709644
	119774-09-700	EA	PLATE-INNER SUPT/MIRROR HEAD	709418-7RH
	131431-01-701	EA	MOTOR	7475400

106015-13-01A

KEY	PART NUMBER	U/M	DESCRIPTION	VENDOR NO.
	106015-12-700	EA	MIRROR-FLAT-W/W/O HEAT	709448
	106015-12-701	EA	MIRROR-CONVEX - W/W/O HEAT	709449
	106015-12-702	EA	CAP/SCREW - (PKG OF 4) - BLK	748329 RND
	106015-12-703	EA	CONVEX GLASS/HANDSET/HOUSING	7095892
	106015-19-701	EA	GLASS/FLAT-W/BEZEL/HEAT/ANTI	709644
	119774-09-701	EA	PLATE INNER SUPT/MIRROR HEAD	709419-7LH
	131431-01-701	EA	MOTOR	7475400

106015-14-01A

KEY	PART NUMBER	U/M	DESCRIPTION	VENDOR NO.
	106015-12-700	EA	MIRROR-FLAT-W/W/O HEAT	709448
	106015-12-701	EA	MIRROR-CONVEX - W/W/O HEAT	709449
	106015-12-702	EA	CAP/SCREW - (PKG OF 4) - BLK	748329 RND
	106015-12-703	EA	CONVEX GLASS/HANDSET/HOUSING	7095892
	106015-19-701	EA	GLASS/FLAT-W/BEZEL/HEAT/ANTI	709644
	119774-09-700	EA	PLATE-INNER SUPT/MIRROR HEAD	709418-7RH

106015-15-01A

KEY	PART NUMBER	U/M	DESCRIPTION	VENDOR NO.
	106015-12-700	EA	MIRROR-FLAT-W/W/O HEAT	709448
	106015-12-701	EA	MIRROR-CONVEX - W/W/O HEAT	709449
	106015-12-702	EA	CAP/SCREW - (PKG OF 4) - BLK	748329 RND
	106015-12-703	EA	CONVEX GLASS/HANDSET/HOUSING	7095892
	106015-19-701	EA	GLASS/FLAT-W/BEZEL/HEAT/ANTI	709644
	119774-09-701	EA	PLATE INNER SUPT/MIRROR HEAD	709419-7LH

106015-18-01A, 106015-19-01A

KEY	PART NUMBER	U/M	DESCRIPTION	VENDOR NO.
	106015-12-702	EA	CAP/SCREW - (PKG OF 4) - BLK	748329 RND
	106015-16-700	EA	GLASS-FLAT W/HEAT ELEMENT	709450
	106015-18-700	EA	GLASS/CONVEX-KIT W/CLIP	709650
	106015-18-701	EA	ACTUATOR - CONVEX GLASS	7475410
	106015-18-702	EA	MOTOR - FLAT GLASS	7471180
	106015-18-703	EA	CONVEX REBUILT KIT	709651
	106015-19-700	EA	VIBRATION KIT - MIRROR GLASS, VELVAC	709645

COPYRIGHT © 2009 WINNEBAGO INDUSTRIES INC.

REV	ZONE	REVISION RECORD	DATE	DFTR-ORIG
		REV DATE	DWG NO 140923	

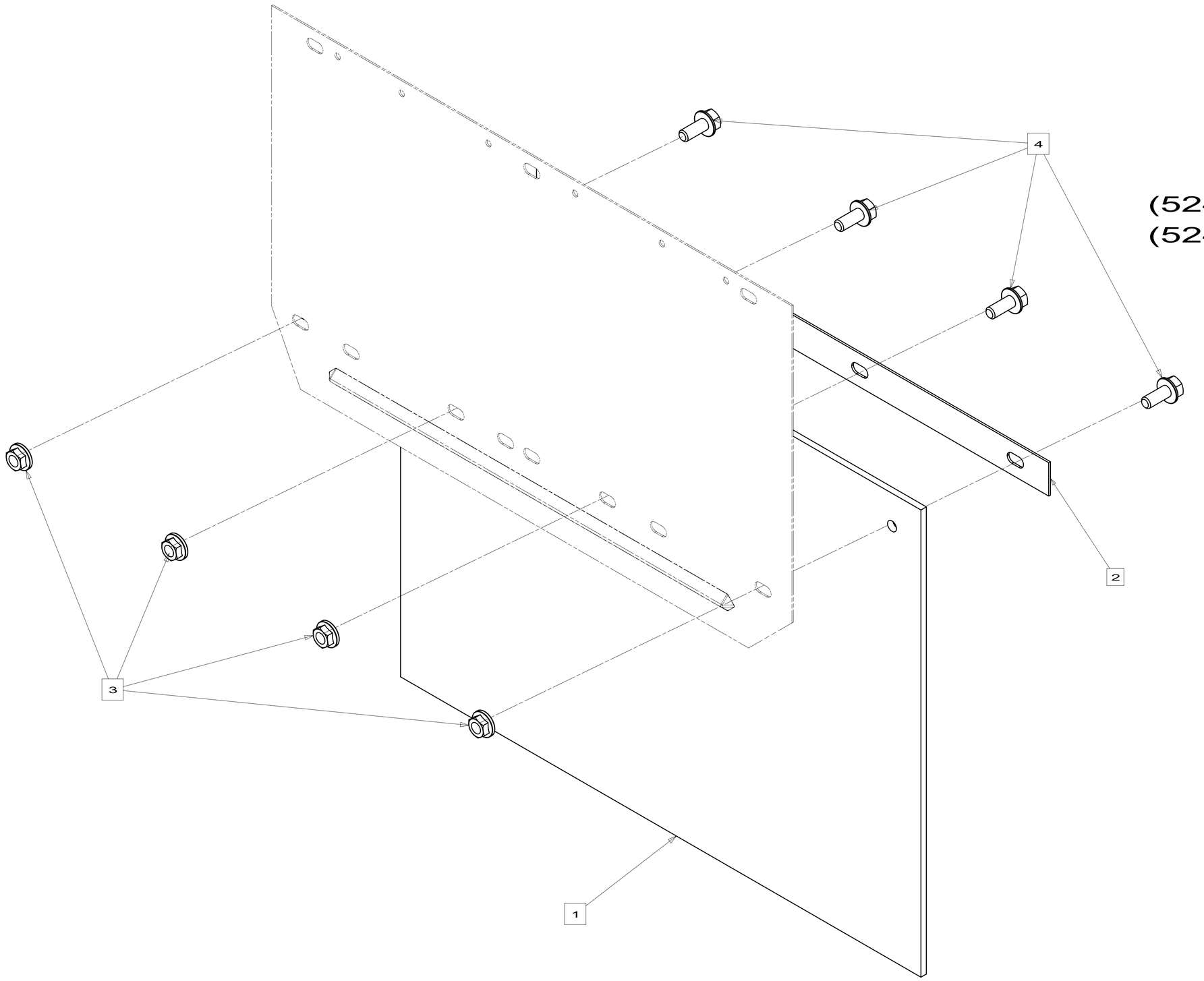

140923-01
331C
500-SERIES
(524A PASSENGER)
(524K PASSENGER)
700-SERIES
D-SERIES
E-SERIES
H SERIES
J SERIES

ITEM	PART NUMBER	DESCRIPTION	QTY
4	000C260512U	BOLT	4
3	000D390500U	NUT	4
2	14092201CHT	PLATE-MUDFLAP	1
1	01751601000	MUD FLAP-BLACK	1

WINNEBAGO INDUSTRIES

COPYRIGHT 2010
WINNEBAGO
INDUSTRIES, INC.

DFTR | ORIG. DATE
CHKR
P.E.
M.E.
DSNR

ALL DIMENSIONS ARE IN MILLIMETERS

FIRST USED
02 MOTORHOMES

UNSPECIFIED TOLERANCES ARE:
WHOLE DIM (X) ±
ONE-PLACE (X.X) ±
TWO-PLACE (X.XX) ±
ANGLE ±

MATERIAL:

THIRD ANGLE PROJECTION

DO NOT SCALE DRAWING

TITLE:
MUD FLAP COMPL

SHEET 1 OF 5 | PART NO 140923 | REV

REF: 1

2/16/2010

DWG NO 140923

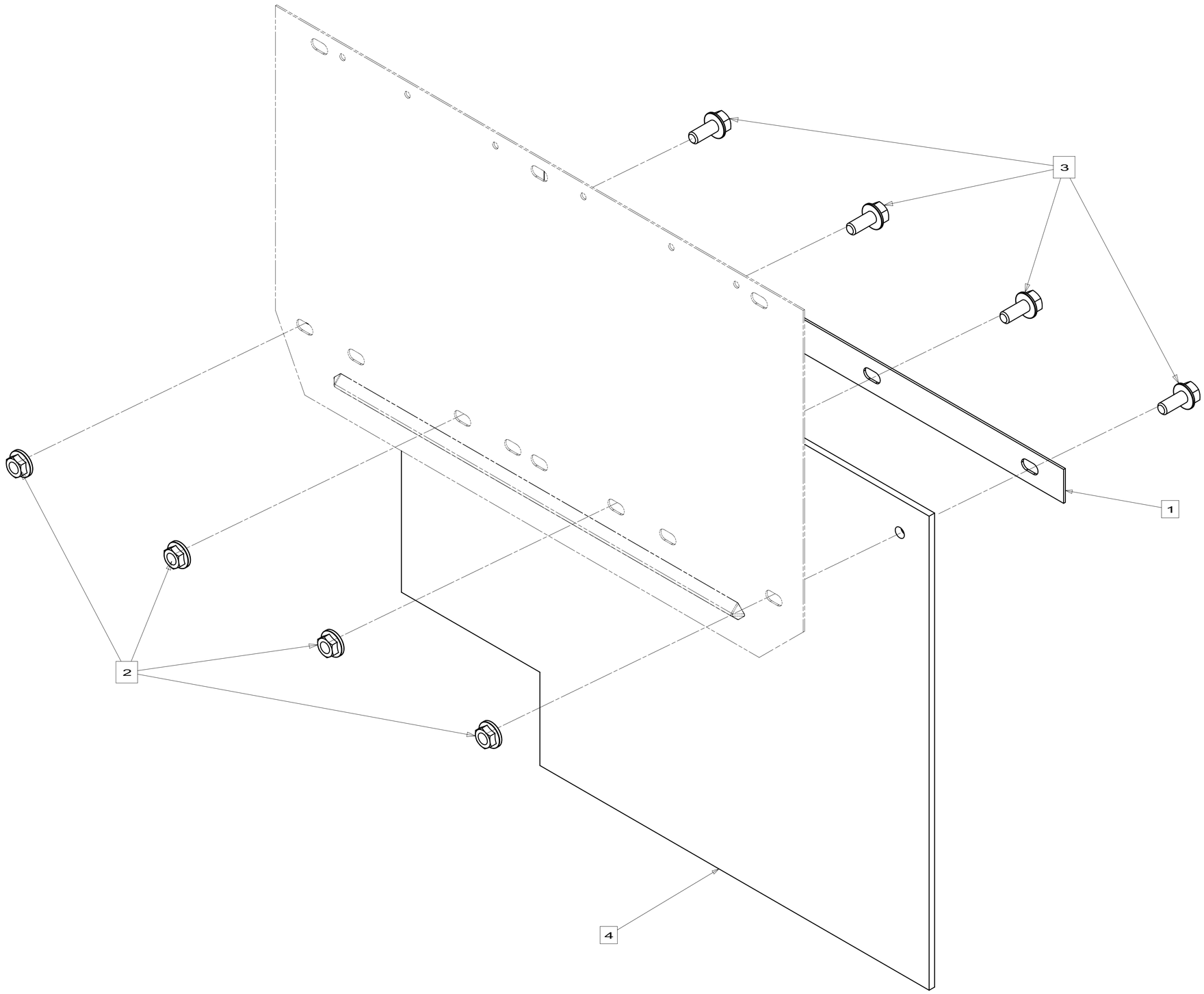

140923-05
D-SERIES
E-SERIES

ITEM	PART NUMBER	DESCRIPTION	QTY
4	01751608000	MUD FLAP-BL	1
3	000C260512U	BOLT	4
2	000D390500U	NUT	4
1	14092201CHT	PLATE-MUDFL	1

FIRST USED: 02 MOTORHOMES

DO NOT SCALE DRAWING

TITLE: MUD FLAP COMPL

SHEET 3 | PART NO 140923 | REV

2/16/2010

REV	DATE	DWG NO

REV	ZONE	REVISION RECORD	DATE	DFTR-ORIG

CAP ASM-ROOF
140596-02-A61 WHT/AA1 SANDING GEL
CLIP-J,-3/8
077955-01-000
RETAINER-SCREW
149753-01-01A BLK/02A WHT (4)
CAP-SCREW, RETAINER
149753-02-01A BLK/02A WHT (4)
SCREW
G39-10-129 (4)

CAP-TRIM,REAR
140620-02-01A WHT/02A BLK
SCREW
G55-08-12U

CAP-TRIM,REAR
140620-01-01A WHT/02A BLK
SCREW
G55-08-12U

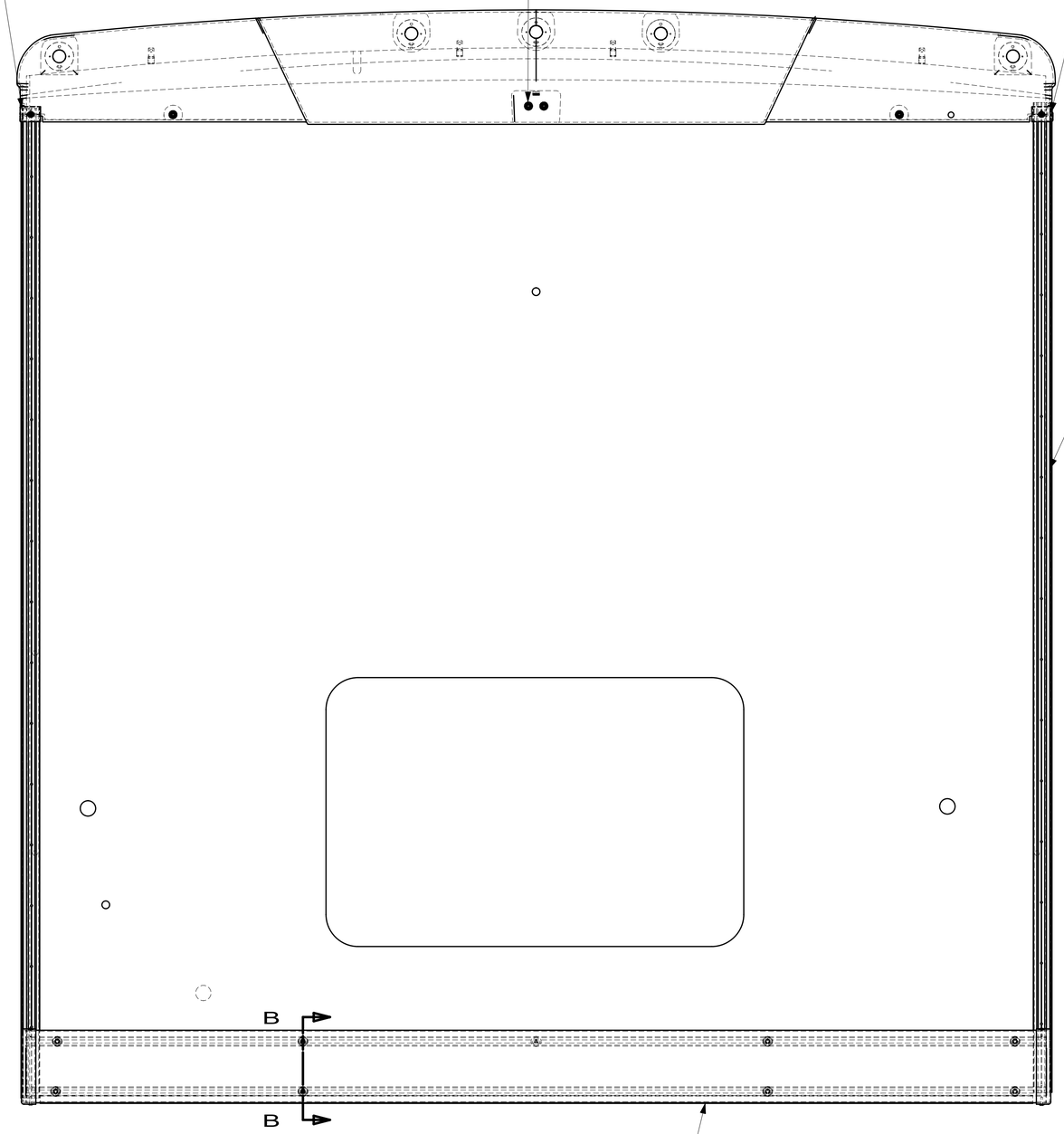

TRIM-CONTOUR
175795-01-01A(B/W)(2)
175795-01-02A(BLK)
SCREW
G67-10-12T (34)
INSERT-VINYL
105312-01-07A WHT/13A BLK (2)
(2458)
123680-08-01A (WHT)(2)(UP T0 12-13-09)
123680-08-02A (BLK)

BUMPER ASM-REAR
161426-01-UQ1 WHT/AA1 BLK

SCREW
G39-10-129 (6)

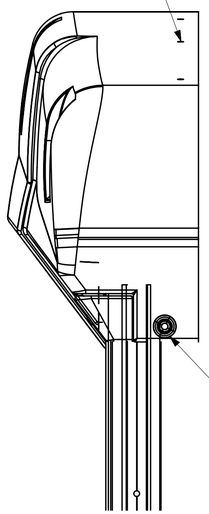

RETAINER-SCREW
149753-01-01A BLK/02A WHT
CAP-SCREW,RETAINER
149753-02-01A BLK/02A WHT
SCREW
G39-10-129 (2)

VIEW A
BOTH ENDS

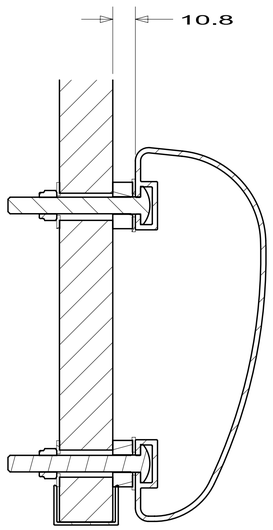

SECTION B-B

COPYRIGHT 2009
WINNEBAGO
INDUSTRIES, INC.

DFTR	ORIG. DATE
CHKR	ALL DIMENSIONS ARE IN MILLIMETERS
P.E.	
M.E.	FIRST USED
DSNR	
UNSPECIFIED TOLERANCES ARE: WHOLE DIM (X) ± ; ONE-PLACE (X.X) ± ; TWO-PLACE (X.XX) ± ; ANGLE ±	MATERIAL:
THIRD ANGLE PROJECTION	

DO NOT SCALE DRAWING

TITLE:
TRIM COMPL-BACKWALL,W/BUMPER

SHEET	OF	PART NO	REV
		161313	

REF:

12/4/2009

RELEASE	REV A	DATE	DWG NO 161426

REV	ZONE	REVISION RECORD	DATE	DFTR-ORIG

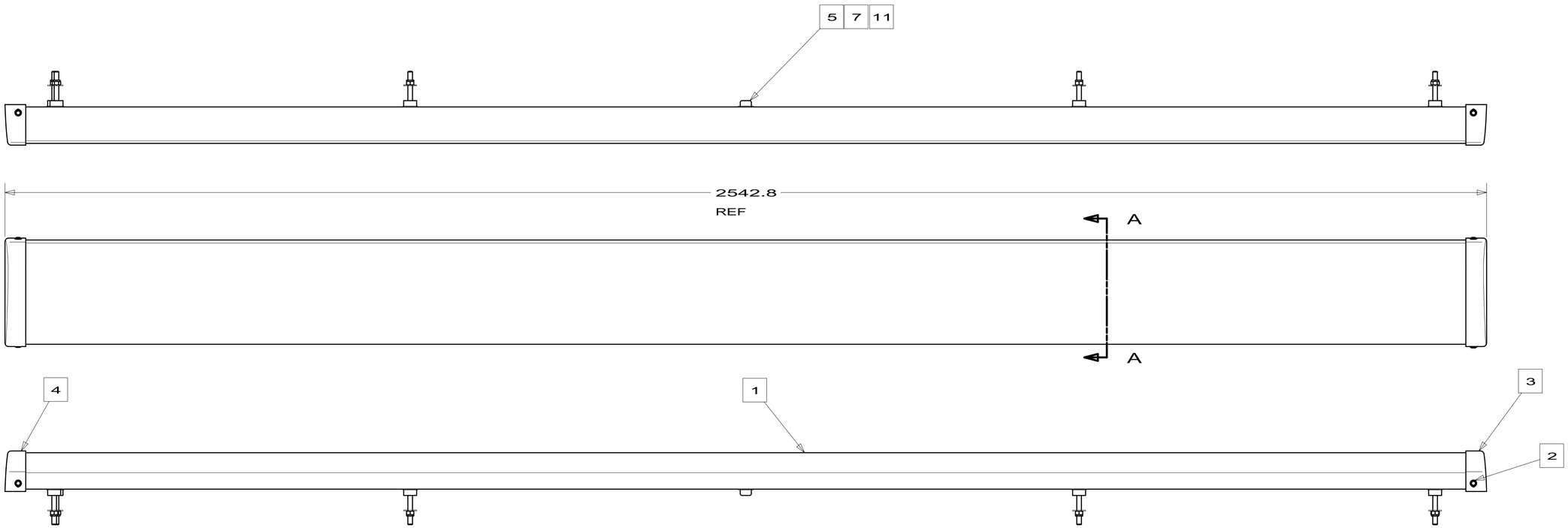

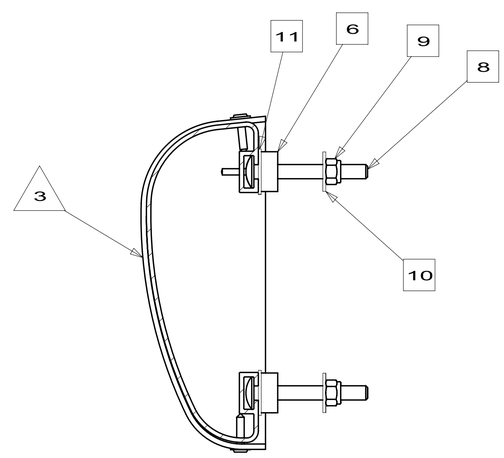

SECTION A-A

ITEM	PART NUMBER	DESCRIPTION	QTY
11	000E131800U	WASHER	9
10	000E131600U	WASHER	8
9	000D290500U	NUT	8
8	000C270540U		8
7	000G390616U	SCREW-PAN,H	1
6	08628508000	SPACER-NYLO	8
5	12086309000	BUMPER-RUBB	1
4	16139102CHT	CAP-BUMPER	1
3	16139101CHT	CAP-BUMPER	1
2	000G550812U	SCREW-PAN,H	4
1	16131201CHT	BUMPER-REAR	1

COPYRIGHT 2009
WINNEBAGO
INDUSTRIES, INC.

DFTR	ORIG. DATE
CHKR	ALL DIMENSIONS ARE IN MILLIMETERS
P.E.	
M.E.	FIRST USED 07 E30B
DSNR	

UNSPECIFIED TOLERANCES ARE:
WHOLE DIM (X) : 3
ONE-PLACE (X.X) : 1.5
TWO-PLACE (X.XX) : 0.50
ANGLE : 1°

MATERIAL:

THIRD ANGLE PROJECTION

WEIGHT: 14.340 LBS

DO NOT SCALE DRAWING

TITLE: BUMPER ASM-REAR

SHEET 1 OF 1 | PART NO 161426 | REV

REF: 1

3 MAX GAP OF 1mm AT FACE OF BUMPER.

2. CLEAN AND FINISH PER ESOO25.12.

1. REMOVE ALL BURRS AND SHARP EDGES.

NOTES:

DWG NO 167492

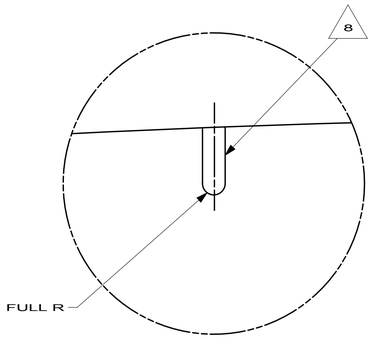

DETAIL BA
3 PLCS

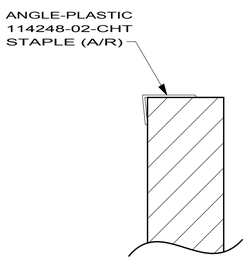

SECTION BB-BB

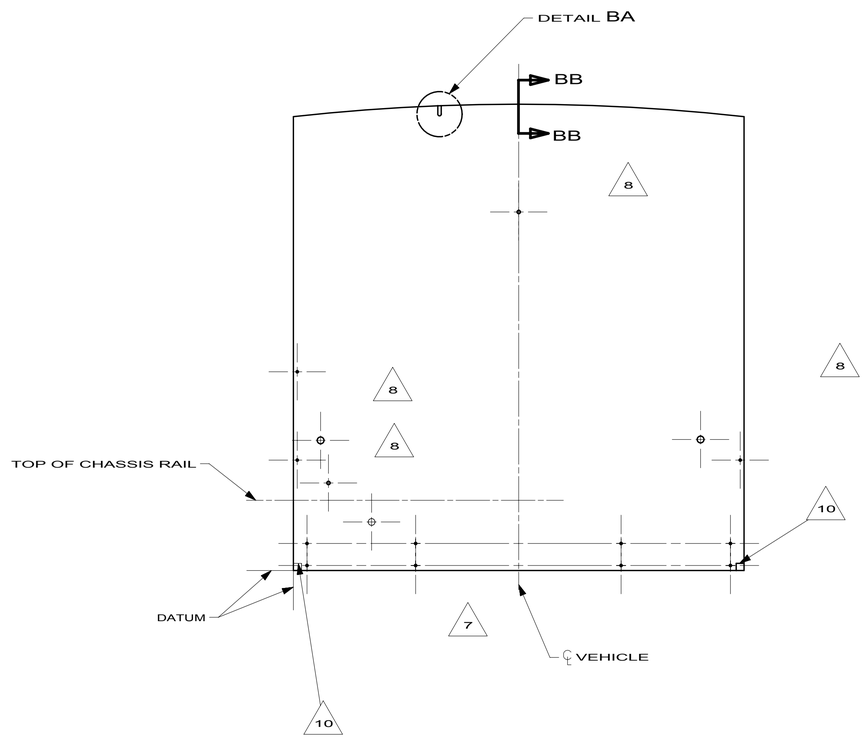

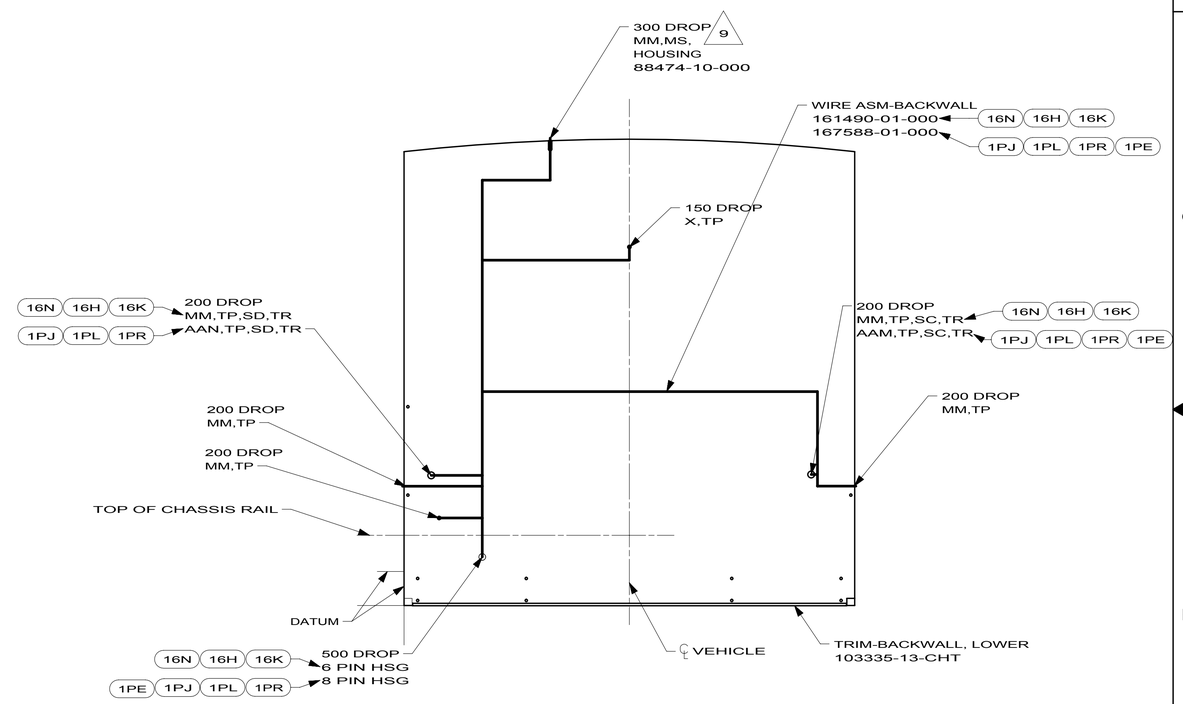

10. THRU INTERIOR PLYWOOD AND ALUMINUM ONLY.

9. INSTALL HOUSING WITH CIRCUIT MM IN POSITION 1 AND CURCUIT MS IN POSTION 2

8. THRU EXTERIOR SKIN ONLY.

7. THRU FOAM AND INNER PANEL.

6. ALL RAII 9.5 UNLESS OTHERWISE SPECIFIED.

5. THRU FOAM AND EXTERIOR SKIN.

4. ALL WIRES SHOWN DENOTE ROUTED PATH.

3. TOLERANCE FOR CUTOUT ±1.5, WIRING ±2.5, WIRE DROPS +150.0/-0..

2. CAP SEAL TRIM WITH SEALANT 72889-20-000.

1. PANEL SHOWN FROM EXTERIOR SIDE.

NOTES:

16K	FORD CHASSIS 22,000
16H	FORD CHASSIS 18,000#/V10 ENG
16N	FORD CHASSIS-16,000 LB. GVWR
1PE	WORKHORSE 20,500 DSL 230HP
1PR	WORKHORSE 21,200# GVWR
1PL	WORKHORSE 18,000# GVWR (W18)
1PJ	WORKHORSE 16,000# GVWR (W16)
265	CODES/STANDARDS-CSA/CMVSS
1B1	CODES/STANDARDS USA

1B1 265

NOTICE

CHANGES TO THIS SHEET
MAY AFFECT OTHERS

FIRST USED	09 E26P
	DO NOT SCALE DRAWING
TITLE:	BACKWALL ASM
SHEET 1	PART NO 167492 REV

DWG NO 171849

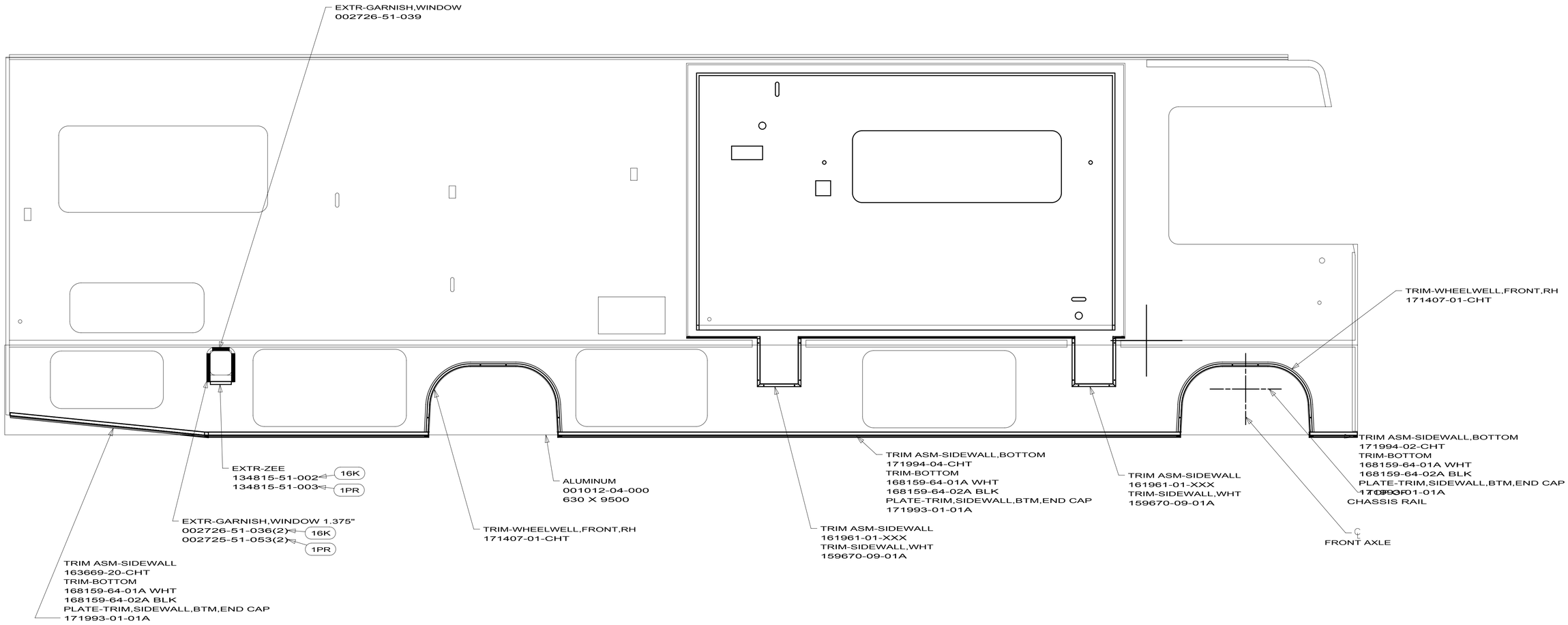

1PR WORKHORSE 22,000#-19.5 TIRE

16K FORD CHASSIS 22,000

FIRST USED	10 E32K
DO NOT SCALE DRAWING	
TITLE:	SIDEWALL ASM-LEFT
SHEET 8	PART NO 171849 REV

1/14/2010

DWG NO 171850

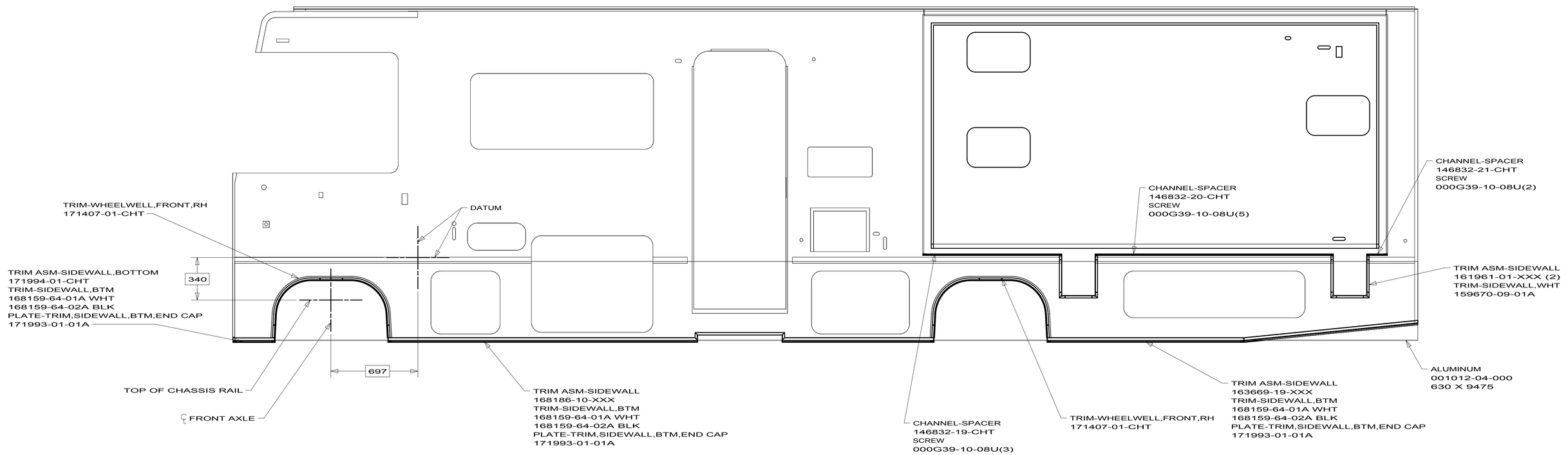

FIRST USED	10 E32K
	DO NOT SCALE DRAWING
TITLE:	SIDEWALL ASM-RIGHT
SHEET 1	PART NO 171850 REV

1/14/2010

RELEASE	REV A	DATE	DWG NO 171852

REV	ZONE	REVISION RECORD	DATE	DFTR-ORIG

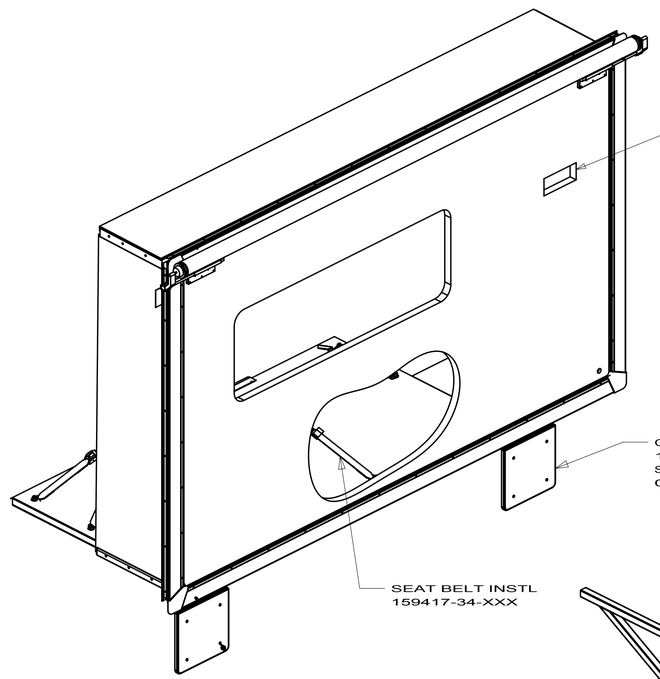

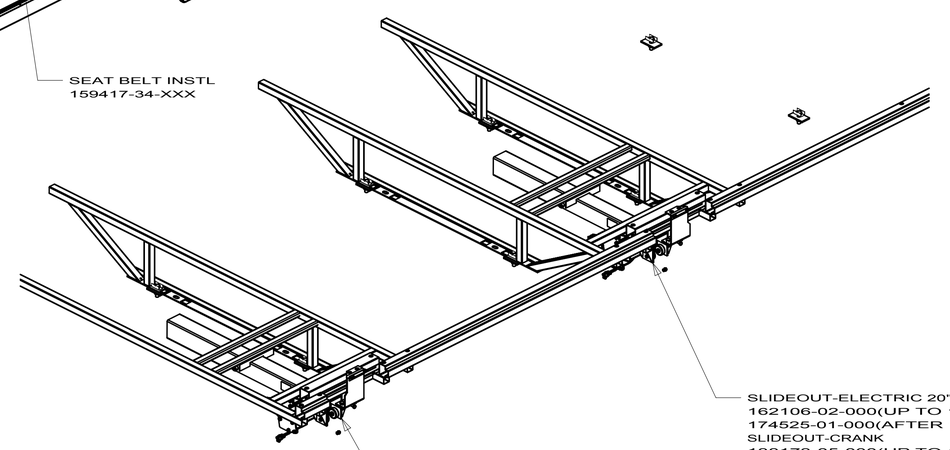

13. SECURE ONE OF THE SLIDEOUT ROOM ACTIVATION KEYS TO THE ROD-LOCK STRAP. KEYS ARE INCLUDED WITH SWITCH ASSEMBLY P/N 163097(REF).

12. ADJUST THIS DIMENSION TO ACHIEVE 6mm OF FALL AT THE END OF THE RAM STROKE.

11. TORQUE ALL BOLTS PER ES0018 UNLESS OTHERWISE SPECIFIED. (SEE TABLE BELOW)

SIZE	TORQUE VALUE (FT-LBS)
1/4 - 20 (.250)	8 (FT-LBS)
5/16 - 18 (.3125)	17 (FT-LBS)
3/8 - 16 (.375)	31 (FT-LBS)
7/16 - 14 (.4375)	50 (FT-LBS)
1/2 - 13 (.500)	76 (FT-LBS)

10. USE POLY-CLEAR 47034-07-000 AND ATTACH IT USING WASHER 44533-01-000 TO PROTECT THE SLIDEOUT FLOOR.

9. SCREWS CANNOT BE REUSED. ANY TIME A SCREW IS REMOVED IT MUST BE DISCARDED AND REPLACED WITH A NEW SCREW TO INSURE THE THREADS SEAL.

8. USE SCREW G39-08-08S TO HOLD EACH END OF TRIM.

7. SEE SEALANT MANUAL.

6. LOOSEN BOLTS TO ALLOW ROOM TO MOVE SIDE TO SIDE ON THE MOUNTING BRACKETS UNTIL IT IS CENTERED IN THE OPENING. TIGHTEN AFTER ALL ADJUSTMENTS ARE COMPLETE.

5. LOOSEN JAM NUTS AND ADJUST BOLT TO MOVE ROOM UP OR DOWN TO BE CENTERED IN THE SIDEWALL OPENING. TIGHTEN AFTER ALL ADJUSTMENTS ARE COMPLETE.

4. THIS IS A NOMINAL DIMENSION; THE PARTS SHOULD BE ADJUSTED AS REQUIRED FROM THERE.

3. THE RETRACTED LENGTH IS ADJUSTED BY THREADING THE STOP BOLT IN OR OUT UNTIL THE OUTSIDE WALL OF THE ROOM SEALS AGAINST THE SIDEWALL.

2. THE EXTENDED LENGTH IS ADJUSTED BY TURNING THE LOCK NUTS ON THE PISTON RODS IN OR OUT UNTIL THE SLIDEOUT ROOM SEALS AGAINST THE SIDEWALL.

1. FOR ADDITIONAL INFORMATION SEE WIRE INSTALLATION FRONT END AND THE LEVELING JACK INSTALLATION DRAWINGS.

NOTES:

65G WINDOW COACH-SINGLE PANE
13Y WINDOWS-COACH-DUAL PANE
094 WINDOWS - SE-GI
64T SIDEWALLS-HIGH GLOSS
64V SIDEWALL-PREMIUM HIGH GLOSS
513 FLOORCOVERING-VINYL-THRU OUT

WINNEBAGO INDUSTRIES

COPYRIGHT 2010
WINNEBAGO
INDUSTRIES, INC.

DFTR	ORIG. DATE
CHKR	ALL DIMENSIONS ARE IN MILLIMETERS
P.E.	
M.E.	FIRST USED 10 E32K
DSNR	
UNSPECIFIED TOLERANCES ARE: WHOLE DIM (X) : 3; ONE-PLACE (X.X) :; TWO-PLACE (X.XX) :; ANGLE :	MATERIAL:
THIRD ANGLE PROJECTION	
DO NOT SCALE DRAWING	REFER TO ES0018 FOR FASTENER TIGHTENING GUIDELINES

TITLE: SLIDEOUT COMPL-FRONT,LH

SHEET 1 OF 5 | PART NO 171852 | REV

REF: 1

4/29/2010

DWG NO 171852

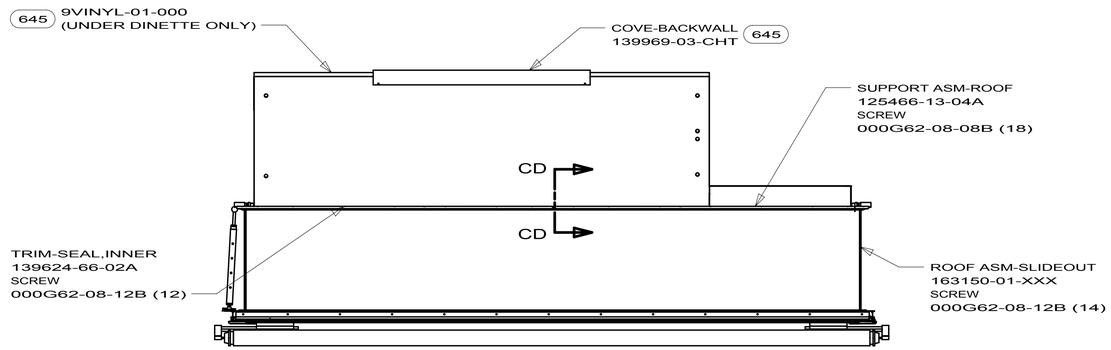

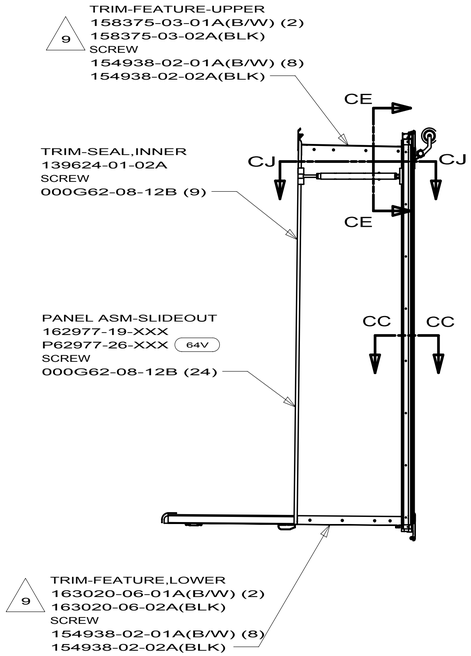

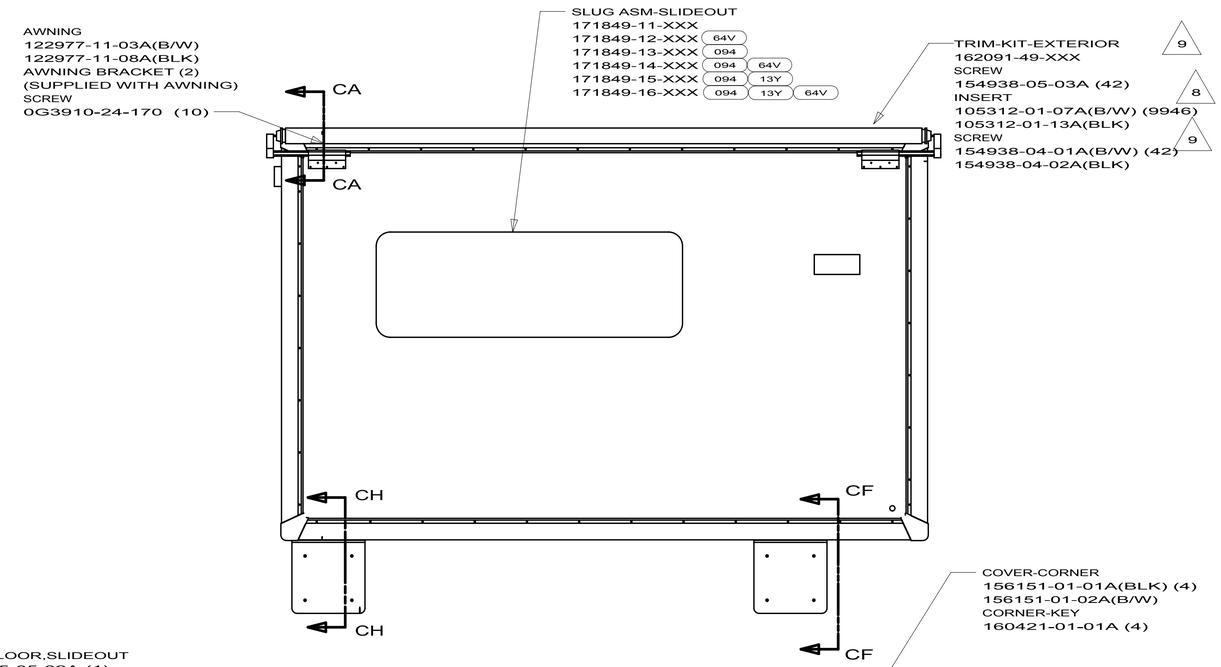

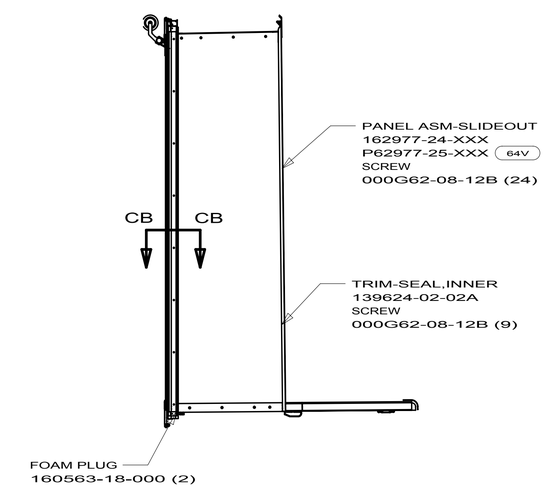

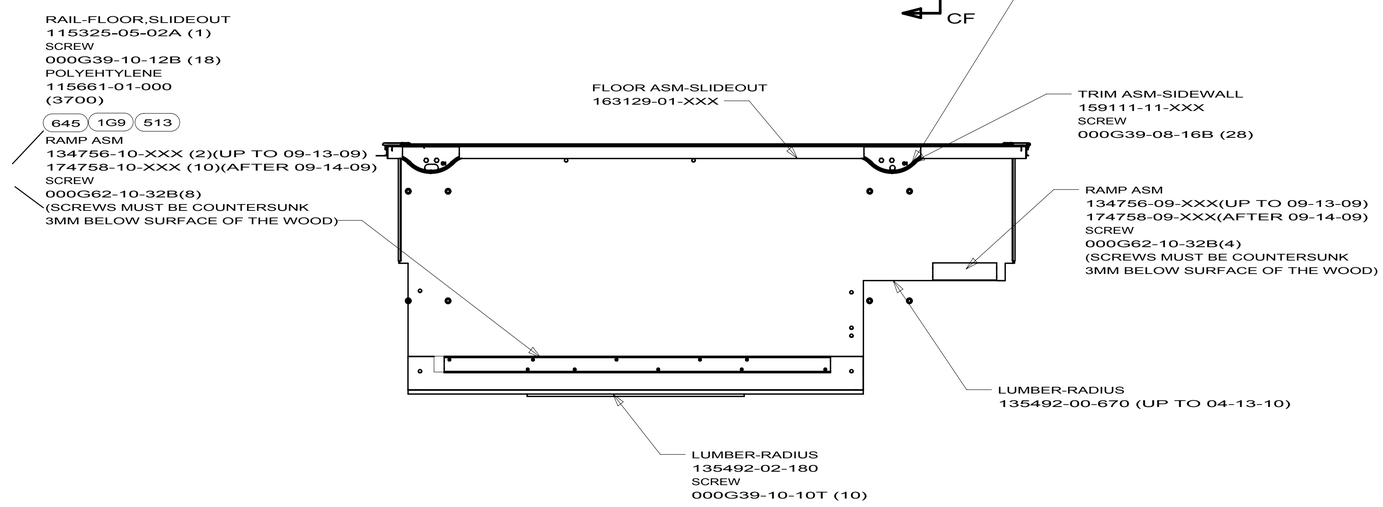

645 RENTAL-MOTURIS

1G9 FLOORCOVERING-VINYL-FRONT

513 FLOORCOVERING-VINYL-THRU OUT

ROOM ASM-SLIDEOUT
(SEE TAB)

FIRST USED	10 E32K
DO NOT SCALE DRAWING	
TITLE:	SLIDEOUT COMPL-FRONT,LH
SHEET 2	PART NO 171852 REV

4/29/2010

DWG NO 171852

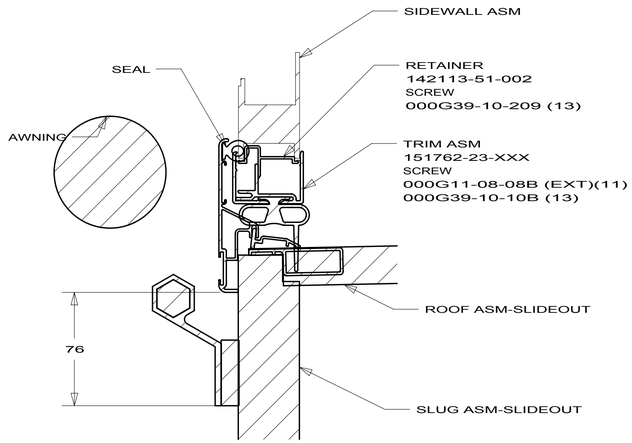

SECTION CA-CA

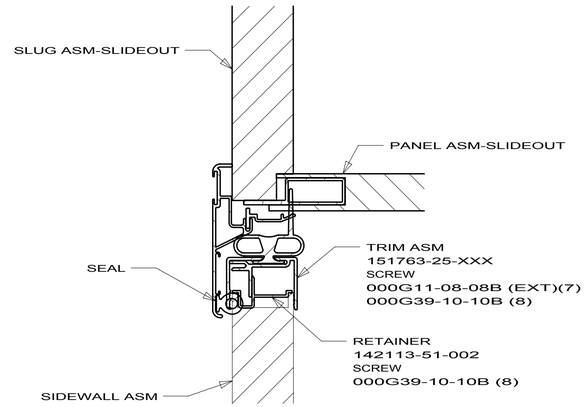

SECTION CB-CB

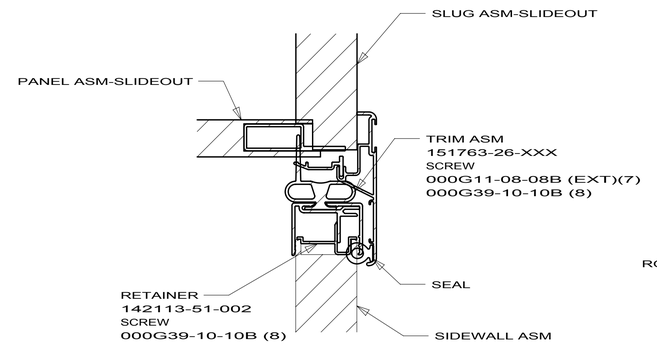

SECTION CC-CC

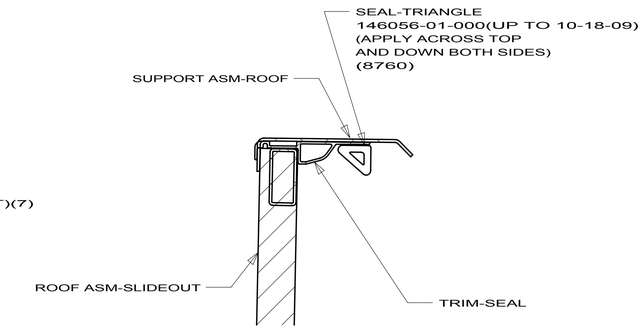

SECTION CD-CD

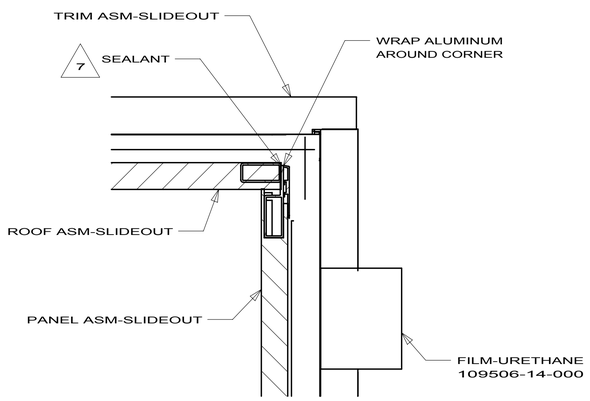

SECTION CE-CE

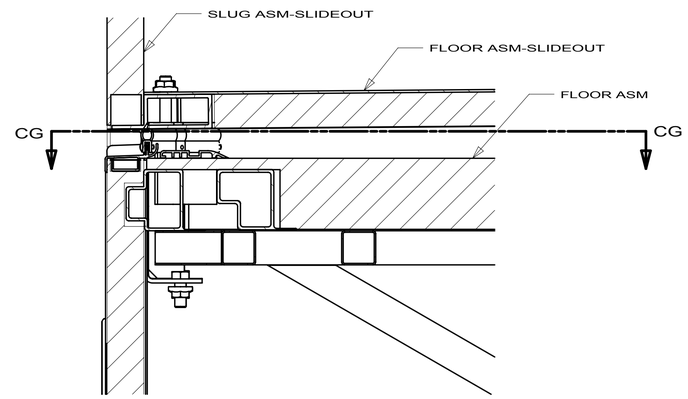

SECTION CF-CF

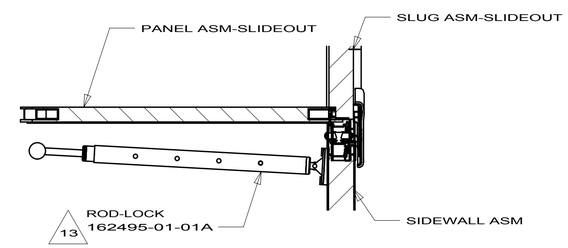

SECTION CJ-CJ

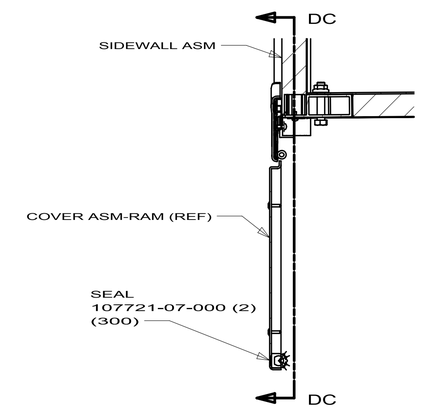

SECTION CH-CH

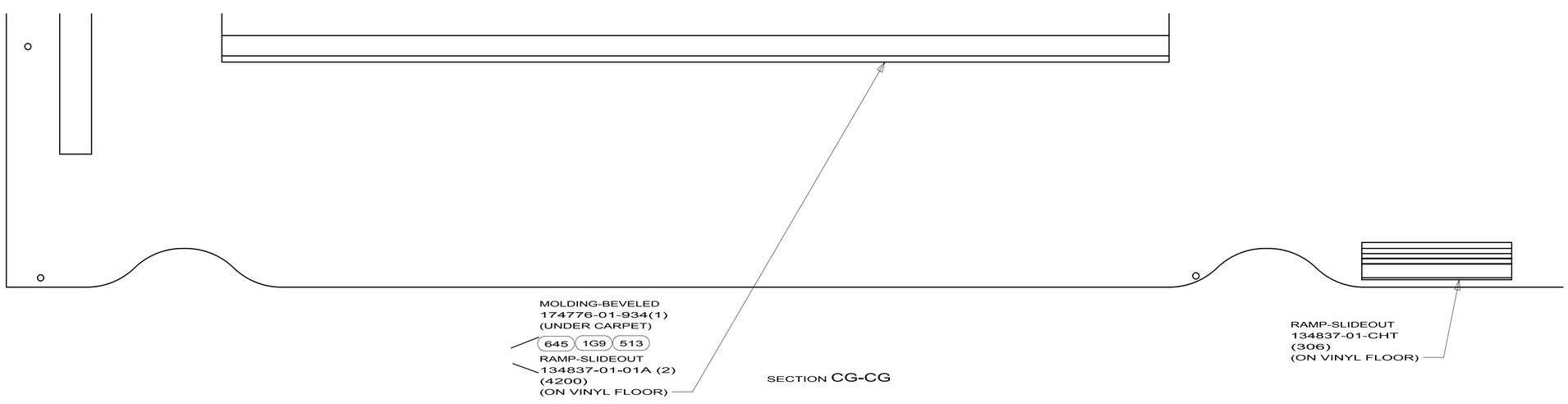

SECTION CG-CG

513 FLOORCOVERING-VINYL-THRU OUT
1G9 FLOORCOVERING-VINYL-FRONT
645 RENTAL-MOTURIS

FIRST USED	10 E32K
DO NOT SCALE DRAWING	
TITLE:	SLIDEOUT COMPL-FRONT,LH
SHEET 3	PART NO 171852 REV

4/29/2010

DWG NO 171852

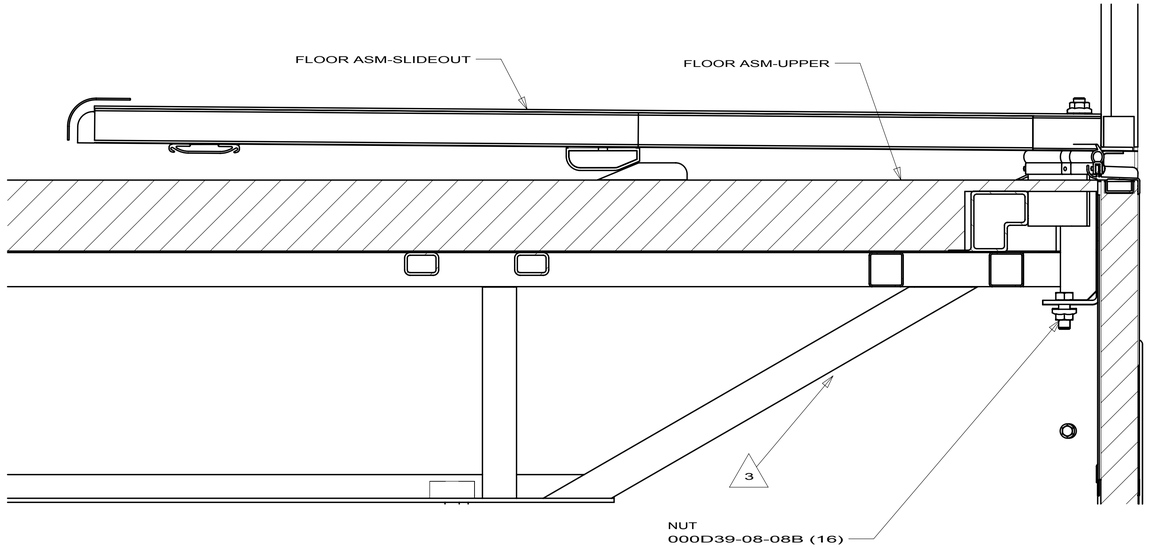

SECTION DA-DA

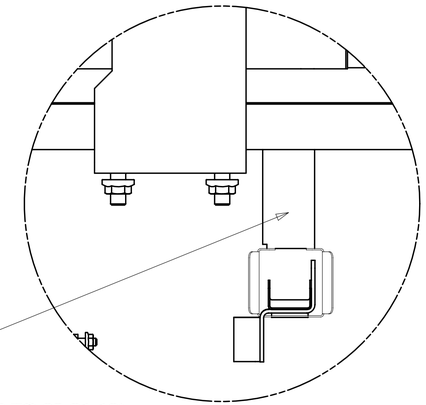

SUPPORT ASM-WIRE
141019-07-02B(UP TO 11-25-09)
141019-15-02B(AFTER 11-36-09, UP TO 03-21-10)
141019-17-02B(AFTER 03-22-10)
BOLT
000C12-04-10B
NUT
000D39-04-00B
TUBE ASM-WIRE SUPPORT
150549-03-02B(UP TO 10-18-09)
150549-08-02B(AFTER 10-19-09,UP TO 11-29-09)
150549-09-02B(AFTER 11-30-09)
SCREW
000G39-10-10T (3)

DETAIL DB
(2 PLCS)

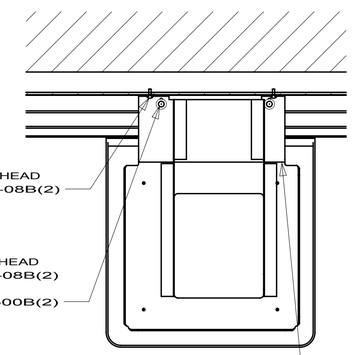

SCREW-PAN,HEAD
000G39-10-08B(2)

SCREW-PAN,HEAD
000G39-10-08B(2)
WASHER
000E13-15-00B(2)

SECTION DC-DC
(2 PLCS)

BRACKET ASM-COVER
163273-01-02B(UP TO 02-11-10)
163273-04-02B(AFTER 02-12-10)
BOLT
000C12-04-10B
NUT
000D39-04-00B

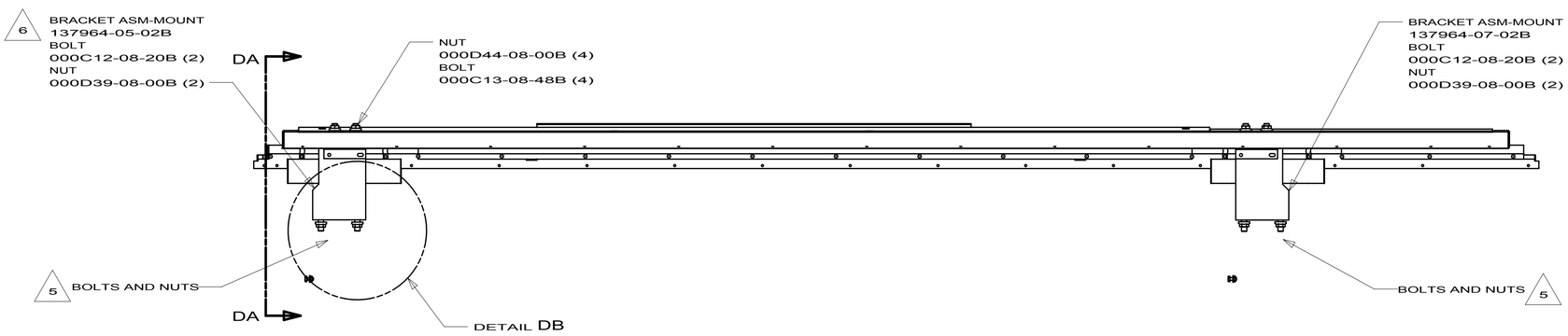

FIRST USED	10 E32K
DO NOT SCALE DRAWING	
TITLE:	SLIDEOUT COMPL-FRONT,LH
SHEET 4	PART NO 171852 REV

4/29/2010

DWG NO 171852

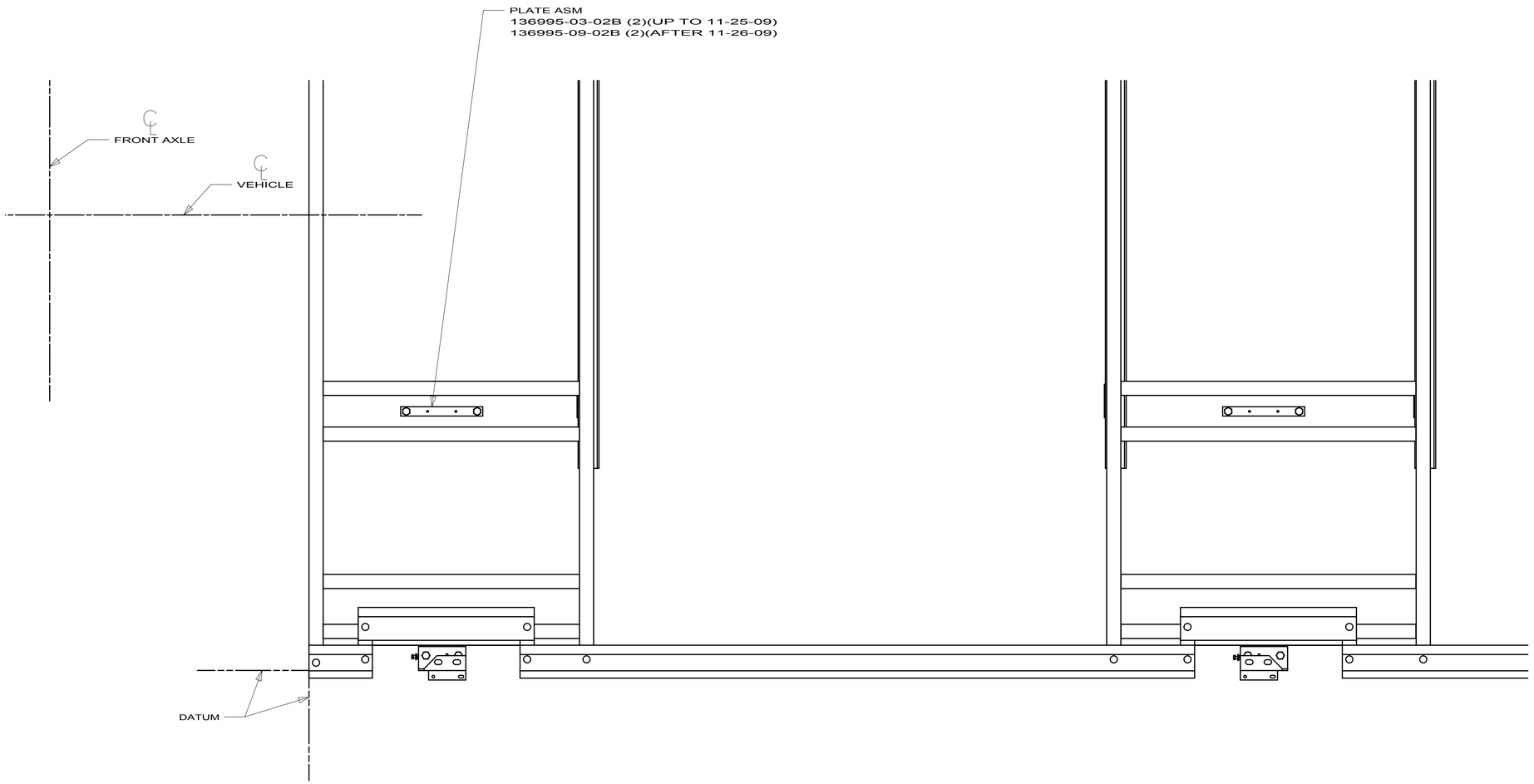

FIRST USED	10 E32K
	DO NOT SCALE DRAWING
TITLE:	SLIDEOUT COMPL-FRONT,LH
SHEET 5	PART NO. 171852 REV

4/29/2010

RELEASE	REV A	DATE	DWG NO 171853

REV	ZONE	REVISION RECORD	DATE	DFTR-ORIG

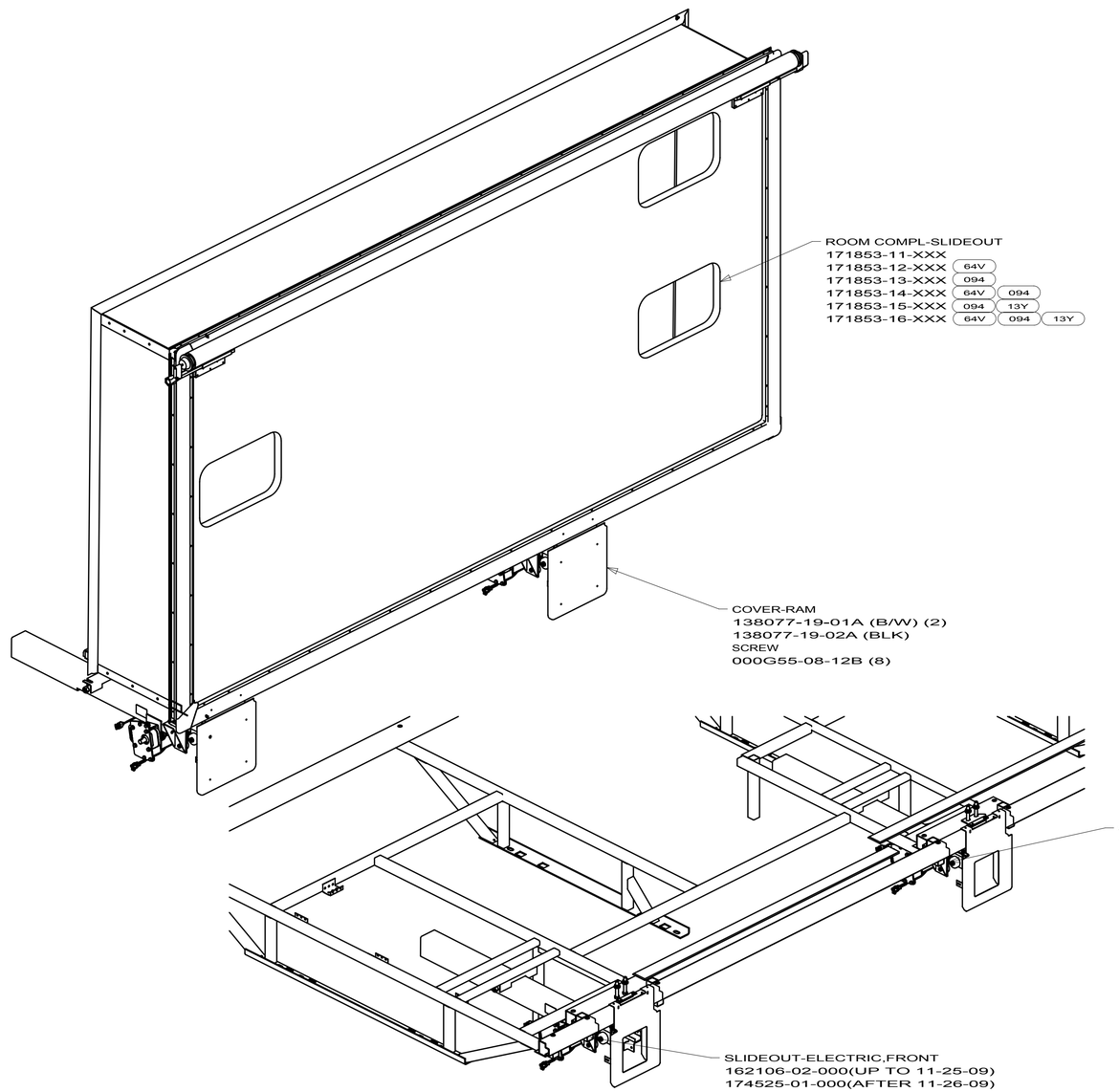

17. CARPET ENTIRE FLOOR

16. TORQUE TO 41 FT-LBS.

15. ADJUST THIS DIMENSION TO ACHIEVE 6mm ±2 OF FALL AT THE END OF THE RAM STROKE.

14. WRAP CARPET AROUND EDGE IN AREA SHOWN.

13. ADJUST STRAP TENSION TO BE TIGHT WHEN ROOM IS COMPLETELY RETRACTED.

12. TORQUE ALL BOLTS PER ES0018 UNLESS OTHERWISE SPECIFIED. (SEE TABLE BELOW)

SIZE	TORQUE VALUE (FT-LBS)
1/4 - 20 (.250)	76 (IN-LBS)
5/16 - 18 (.3125)	13 (FT-LBS)
3/8 - 16 (.375)	23 (FT-LBS)
7/16 - 14 (.4375)	37 (FT-LBS)
1/2 - 13 (.500)	57 (FT-LBS)

11. USE POLY-CLEAR 047034-07-000 AND ATTACH IT USING WASHER 044533-01-000 TO PROTECT THE SLIDEOUT FLOOR.

10. POSITION SEAL FLUSH WITH LOWER TRIM AND TIGHT AGAINST INNER TRIM.

9. SCREWS CANNOT BE REUSED. ANY TIME A SCREW IS REMOVED IT MUST BE DISCARDED AND REPLACED WITH A NEW SCREW TO INSURE THE THREADS SEAL.

8. USE SCREW 000G39-08-08S TO HOLD EACH END OF TRIM.

7. SEE SEALANT MANUAL.

6. LOOSEN BOLTS TO ALLOW ROOM TO MOVE SIDE TO SIDE ON THE MOUNTING BRACKETS UNTIL IT IS CENTERED IN THE OPENING. TIGHTEN AFTER ALL ADJUSTMENTS ARE COMPLETE.

5. LOOSEN JAM NUTS AND ADJSUT BOLT TO MOVE ROOM UP OR DOWN TO BE CENTERED IN THE SIDEWALL OPENING. TIGHTEN AFTER ALL ADJUSTMENTS ARE COMPLETE.

4. THIS IS A NOMINAL DIMENSION; THE PARTS SHOULD BE ADJUSTED AS REQUIRED FROM THERE.

3. THE RETRACTED LENGTH IS ADJUSTED BY THREADING THE STOP BOLT IN OR OUT UNTIL THE OUTSIDE WALL OF THE ROOM SEALS AGAINST THE SIDEWALL.

2. THE EXTENDED LENGTH IS ADJUSTED BY TURNING THE LOCK NUTS ON THE PISTON RODS IN OR OUT UNTIL THE SLIDEOUT ROOM SEALS AGAINST THE SIDEWALL.

1. FOR ADDITIONAL INFORMATION SEE WIRE INSTALLATION FRONT END AND THE LEVELING JACK INSTALLATION DRAWINGS.

NOTES:

65G WINDOWS-SINGLE PANE
13Y WINDOWS-DUAL PANE
094 WINDOWS-SE-GI
64T SIDEWALLS-HIGH GLOSS
64V SIDEWALL-PREMIUM HIGH GLOSS

WINNEBAGO INDUSTRIES

COPYRIGHT 2010
WINNEBAGO
INDUSTRIES, INC.

DFTR	ORIG. DATE
CHKR	ALL DIMENSIONS ARE IN MILLIMETERS
P.E.	
M.E.	FIRST USED
DSNR	10 E32K

UNSPECIFIED TOLERANCES ARE:
WHOLE DIM (X) : 3
ONE-PLACE (X.X) : 1.5
TWO-PLACE (X.XX) : 0.50
ANGLE : 1°

MATERIAL:

THIRD ANGLE PROJECTION

DO NOT SCALE DRAWING

REFER TO ES0018 FOR FASTENER TIGHTENING GUIDELINES

TITLE:
SLIDEOUT COMPL-REAR,RH

SHEET 1 OF 5 | PART NO 171853 | REV

REF: 1

3/25/2010

DWG NO 171853

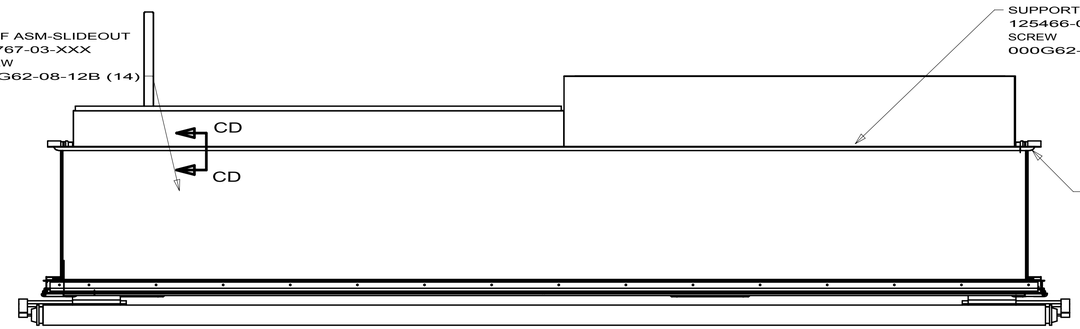

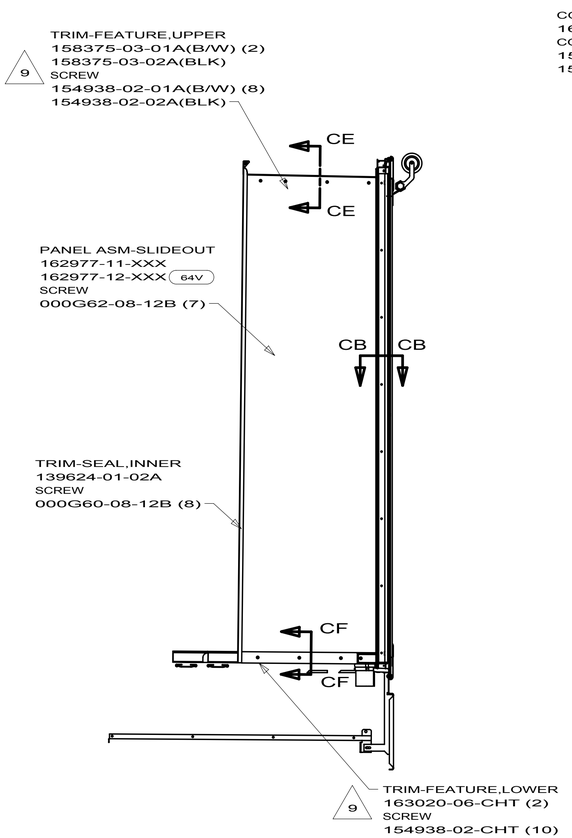

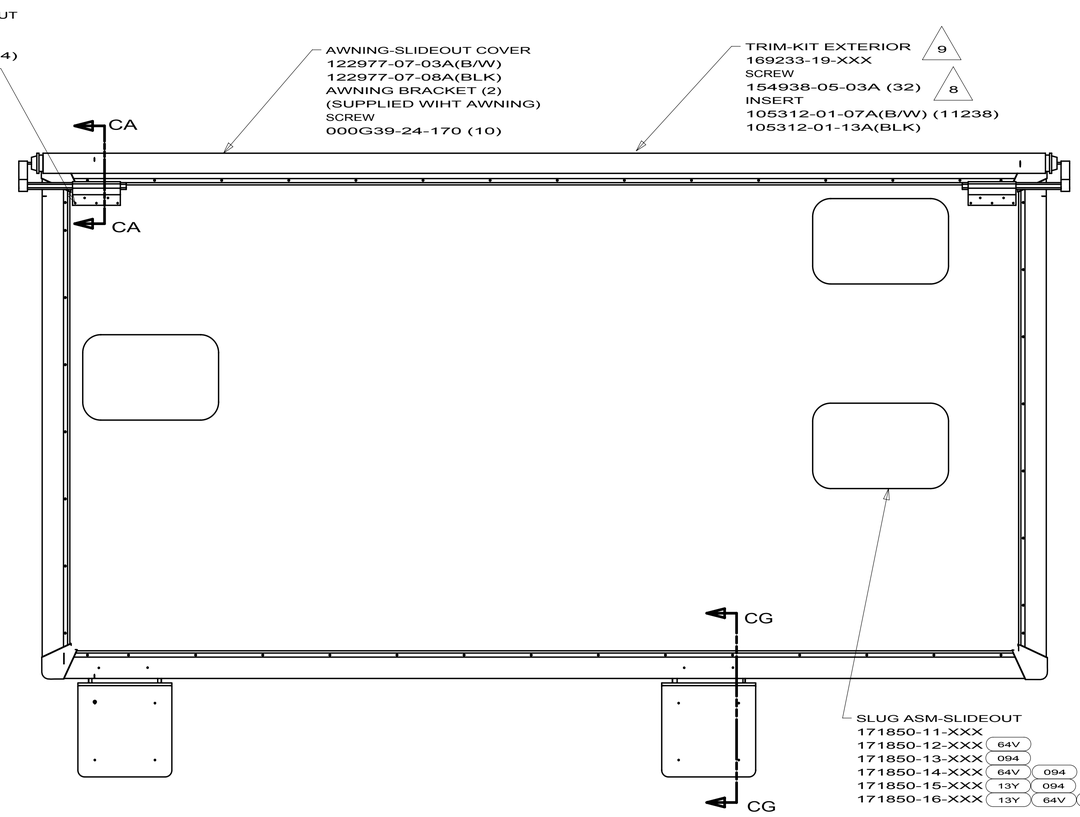

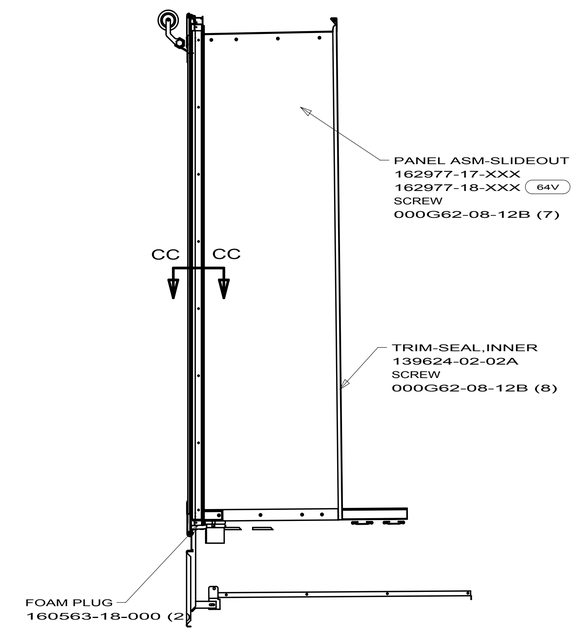

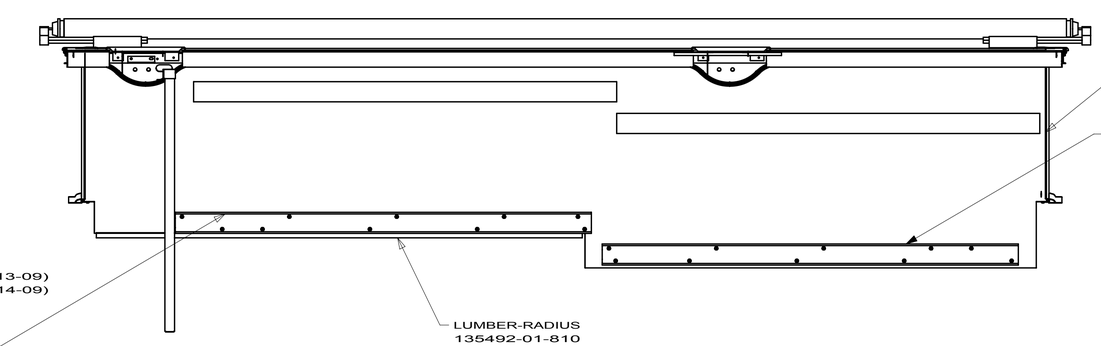

ROOM COMPL-SLIDEOUT
(SEE TAB)

513 FLOORCOVERING-VINYL-THRU OUT

FIRST USED	10 E32K
	DO NOT SCALE DRAWING
TITLE:	SLIDEOUT COMPL-REAR,RH
SHEET 2	PART NO 171853 REV

3/25/2010

DWG NO 171853

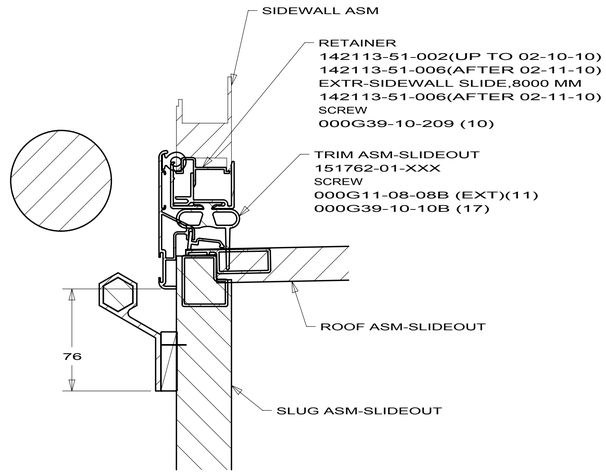

SECTION CA-CA

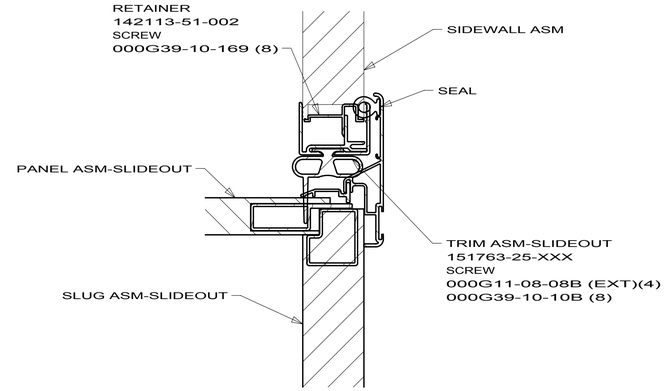

SECTION CB-CB

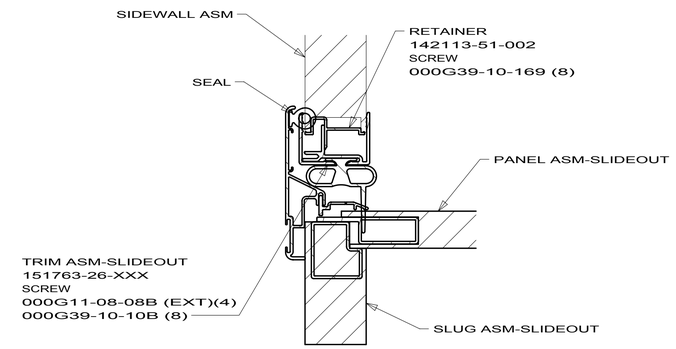

SECTION CC-CC

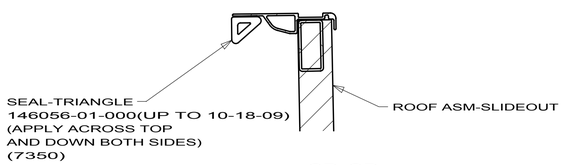

SECTION CD-CD

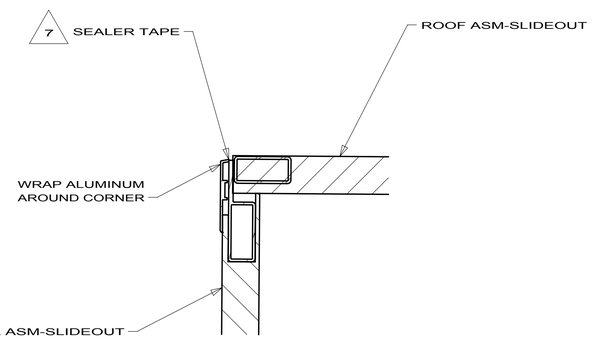

SECTION CE-CE

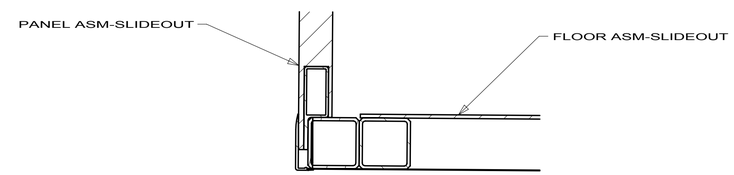

SECTION CF-CF

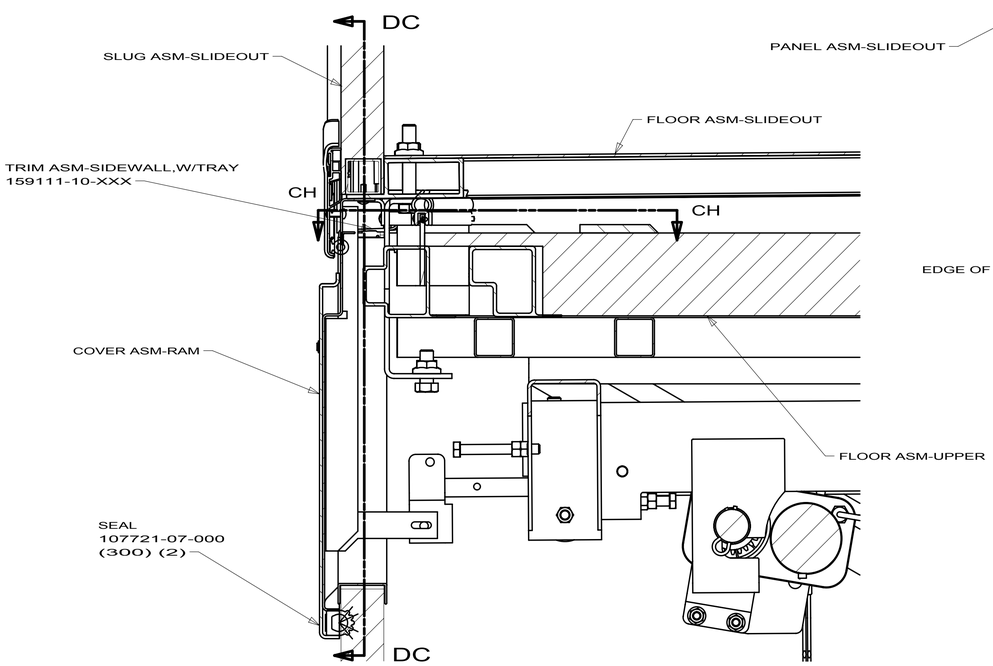

SECTION CG-CG

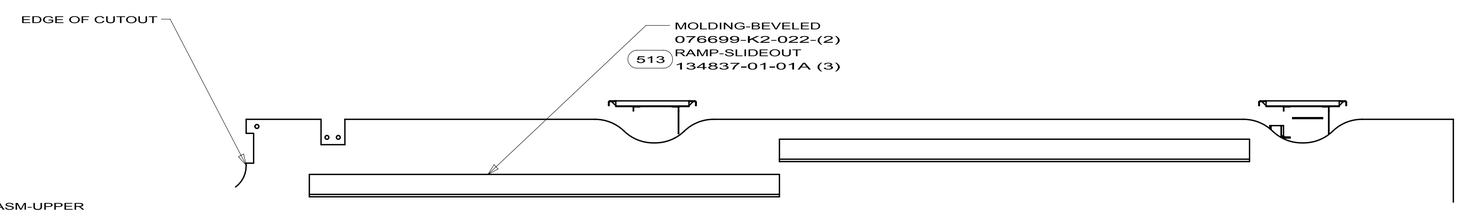

SECTION CH-CH

513 FLOORCOVERING-VINYL-THRU OUT

FIRST USED	10 E32K
DO NOT SCALE DRAWING	
TITLE:	SLIDEOUT COMPL-REAR,RH
SHEET 3	PART NO 171853 REV

3/25/2010

DWG NO 171853

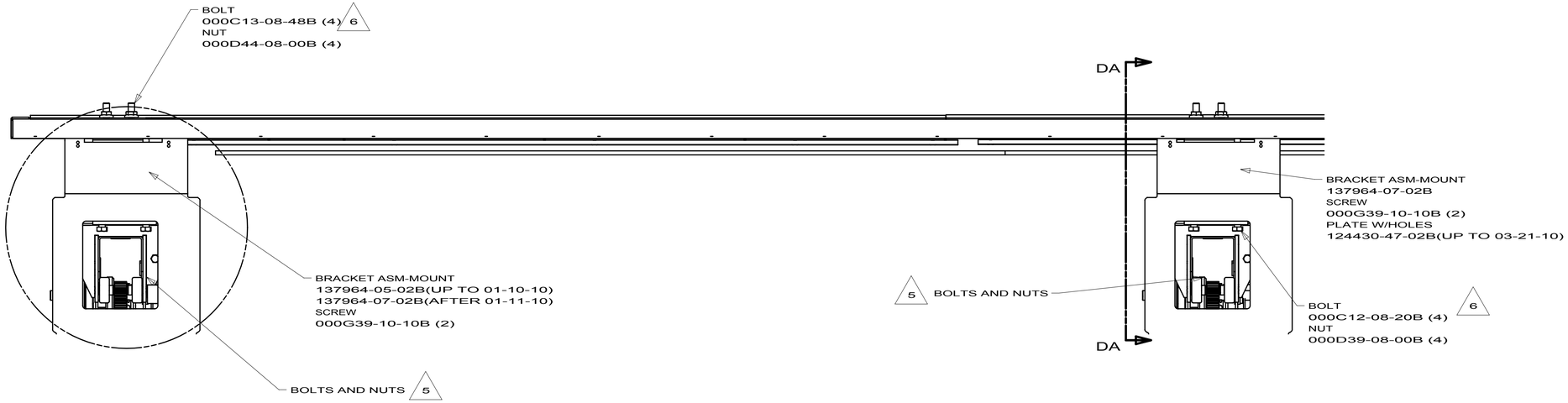

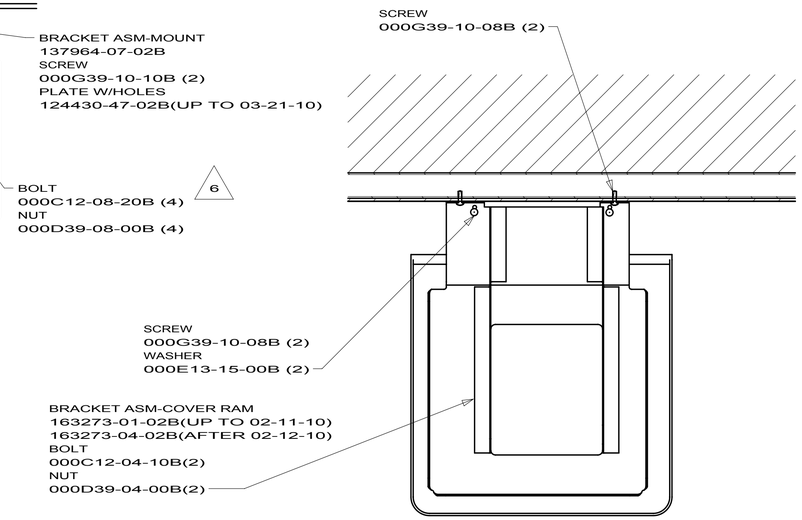

SECTION DC-DC
(2 PLCS)

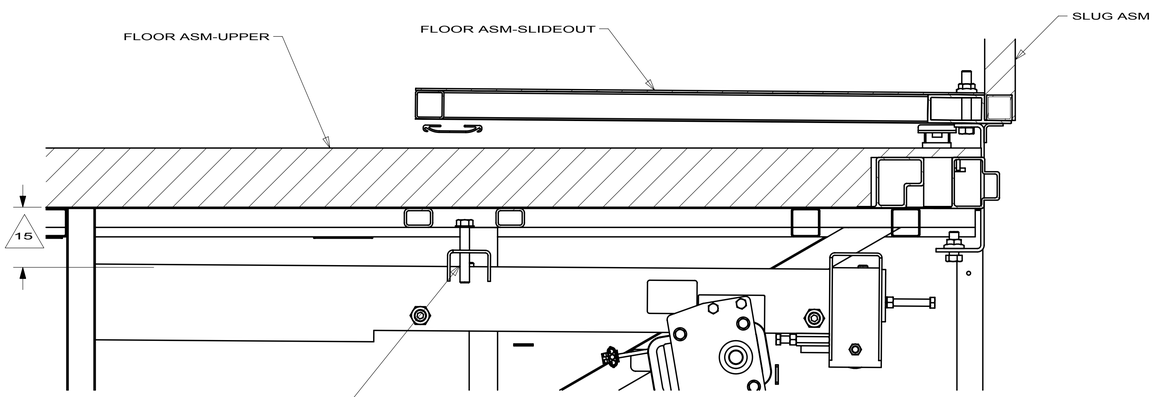

SECTION DA-DA

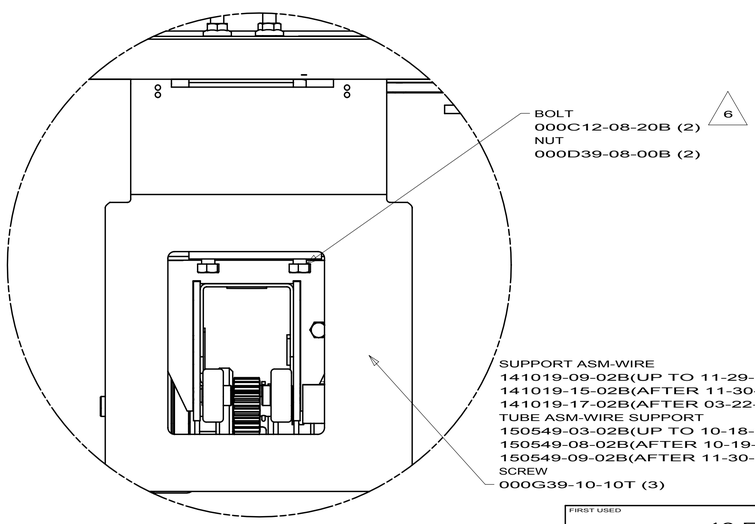

DETAIL DB

FIRST USED	10 E32K
DO NOT SCALE DRAWING	
TITLE:	SLIDEOUT COMPL-REAR,RH
SHEET 4	PART NO 171853 REV

3/25/2010

DWG NO 171853

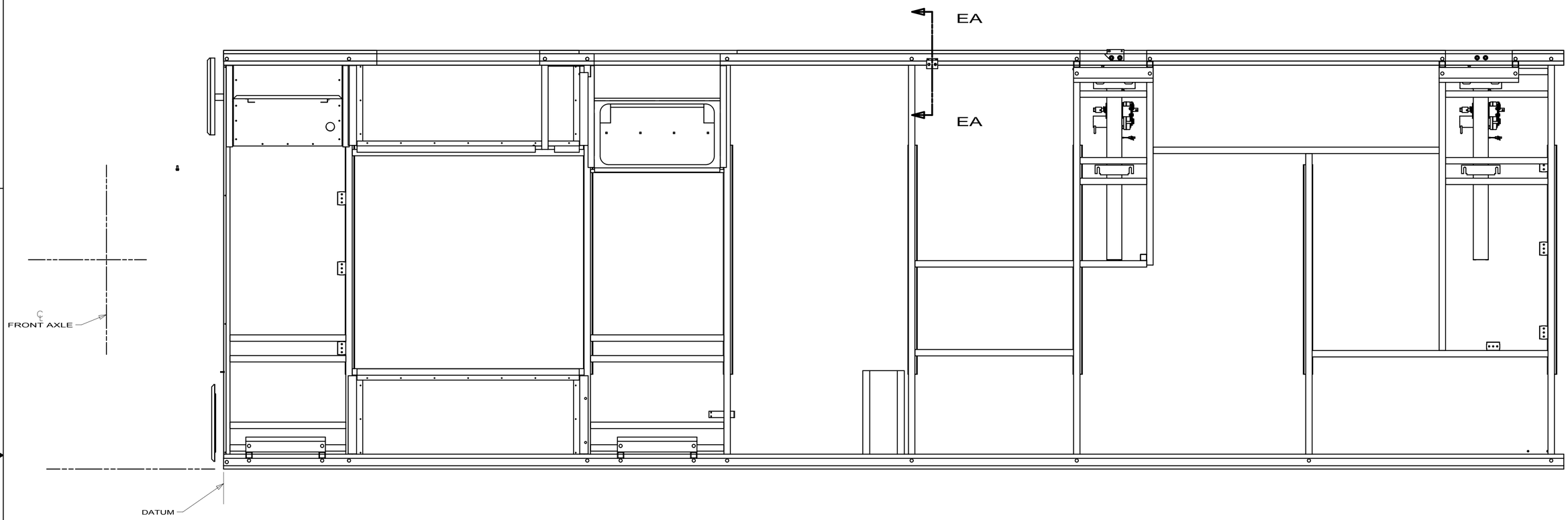

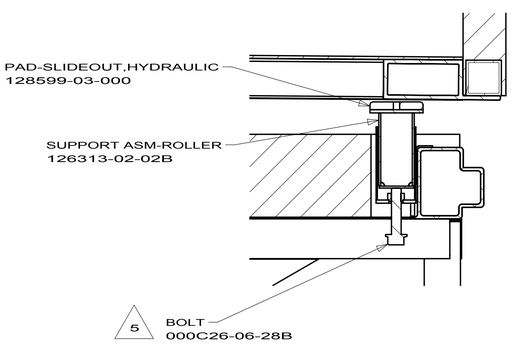

SECTION EA-EA

FIRST USED	10 E32K
DO NOT SCALE DRAWING	
TITLE:	SLIDEOUT COMPL-REAR,RH
SHEET 5	PART NO 171853 REV

3/25/2010

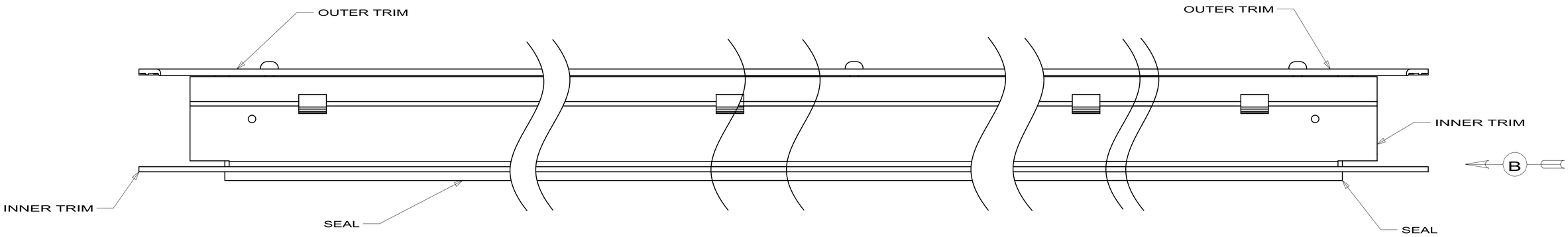

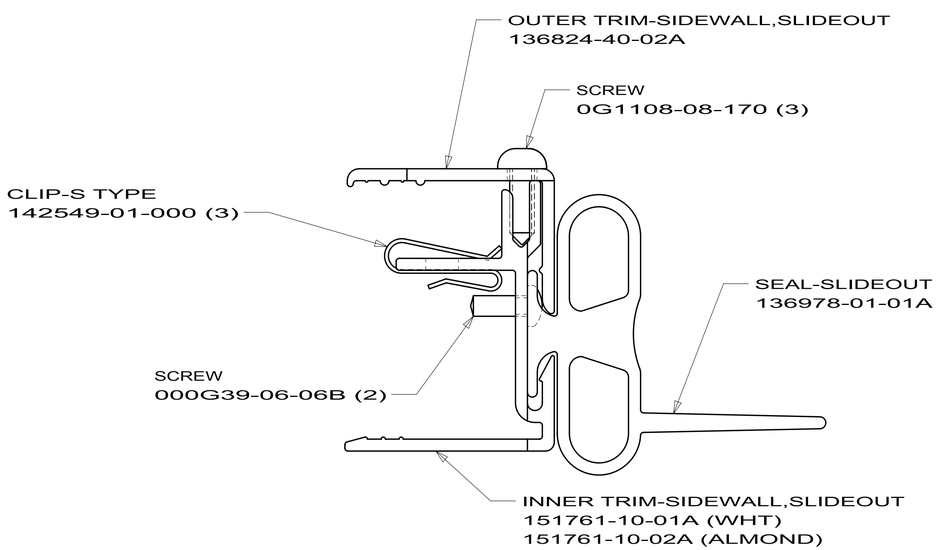

VIEW B

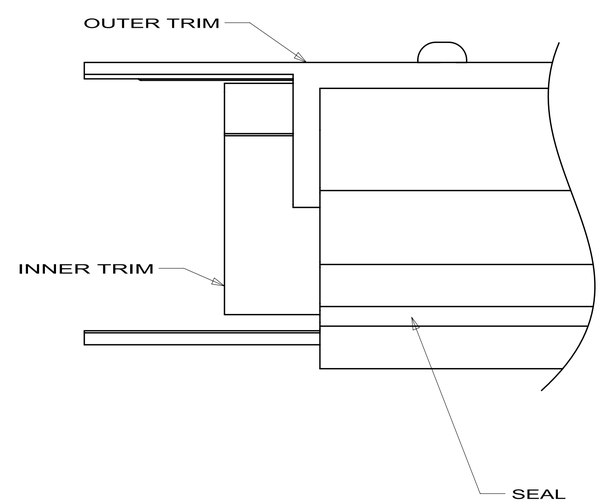

FABWELL SDW

TRIM ASM-SLIDEOUT,TOP

1 151762

2/18/2010

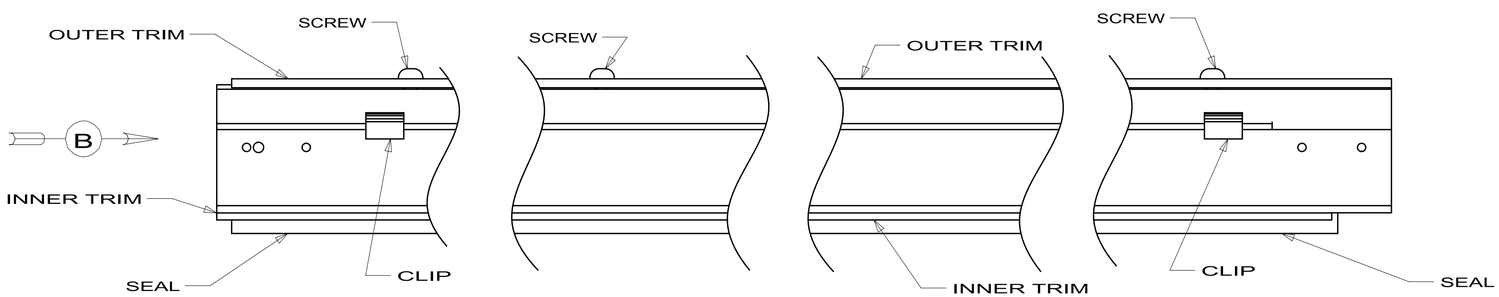

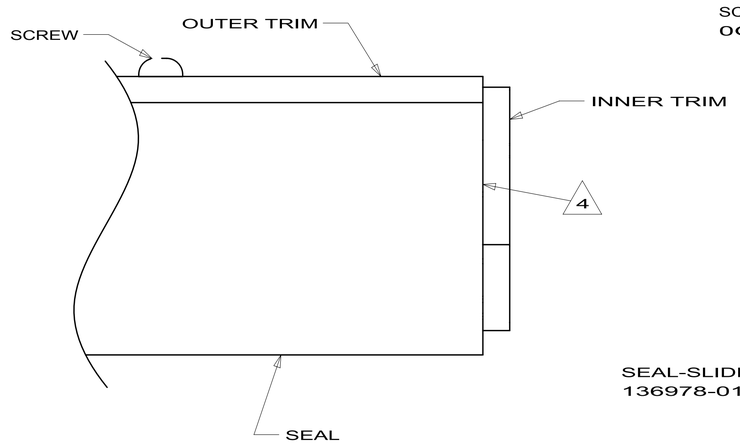

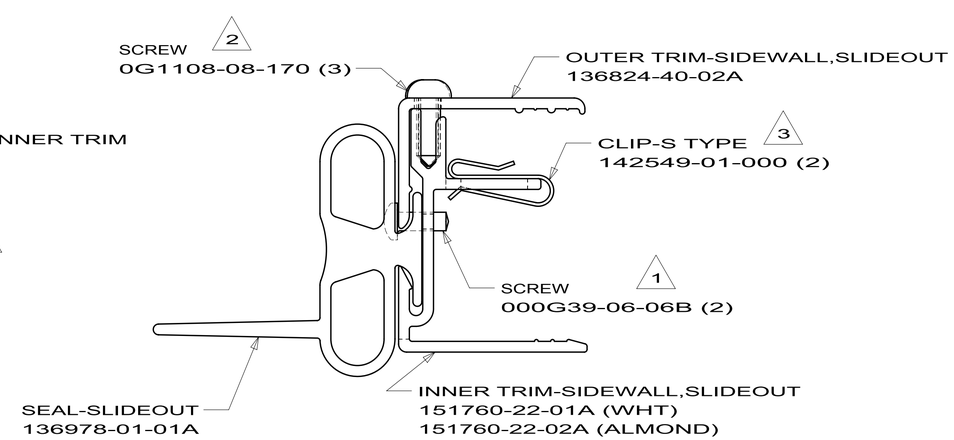

VIEW B

FABWELL SDW

4 SEAL TO BE FLUSH WITH OUTER TRIM.

3 TOLERANCE ON THE CLIP SPACING IS ± 100.0 MM.

2 APPLY SCREWS AT EACH END AND ONE IN THE MIDDLE OF THE OUTER TRIM.

1 APPLY SCREW THROUGH SEAL SO THAT IT HOLDS THE SEAL IN PLACE ON THE INNER TRIM.

NOTES:

TRIM ASM-SLIDEOUT,SIDE

1 2 151763

2/19/2010

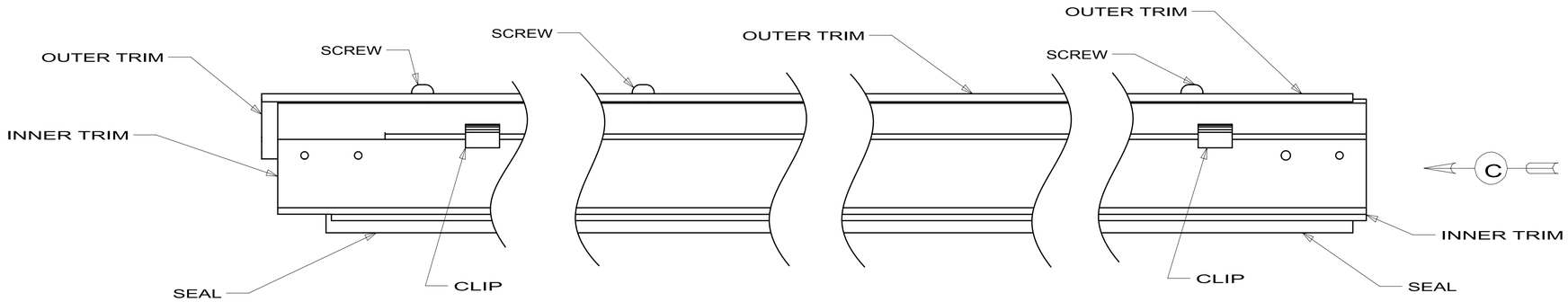

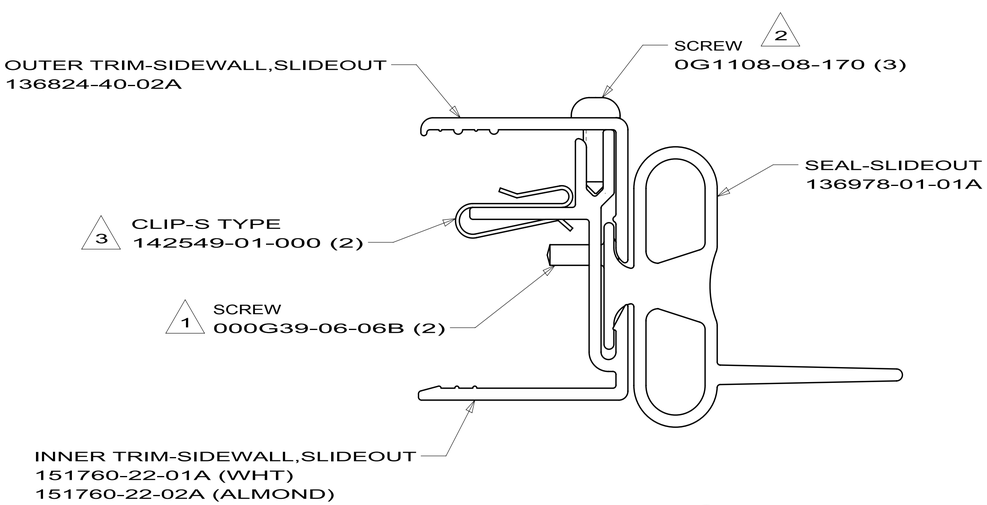

VIEW C

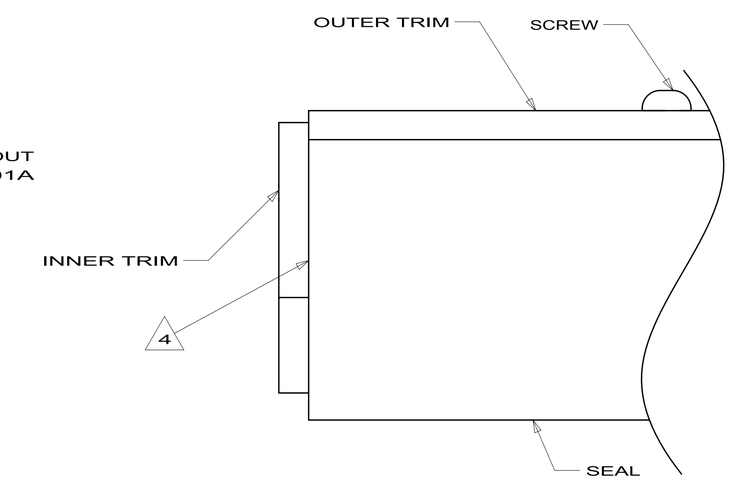

FABWELL SDW

TRIM ASM-SLIDEOUT,SIDE

2 151763

2/19/2010

DWG NO 159417

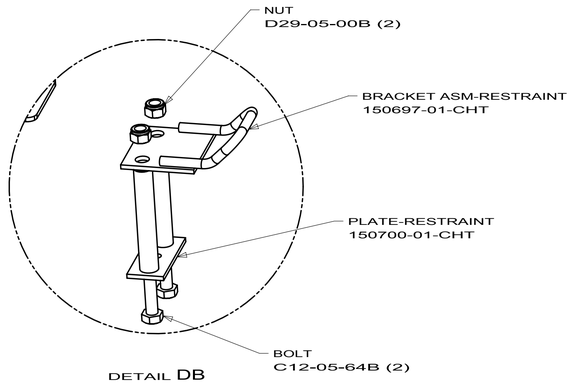

DETAIL DB

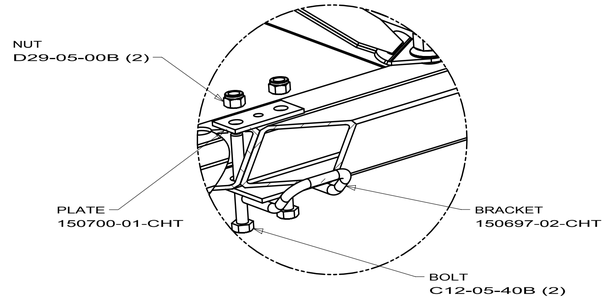

DETAIL VBC

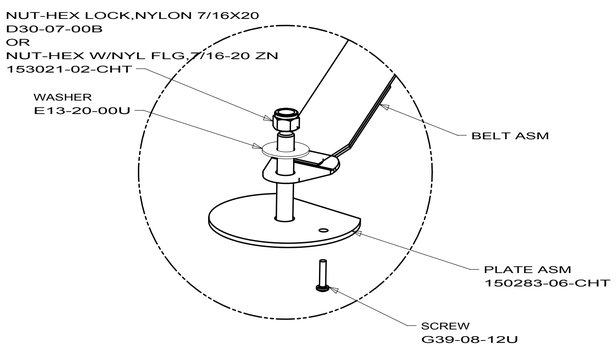

DETAIL VBD

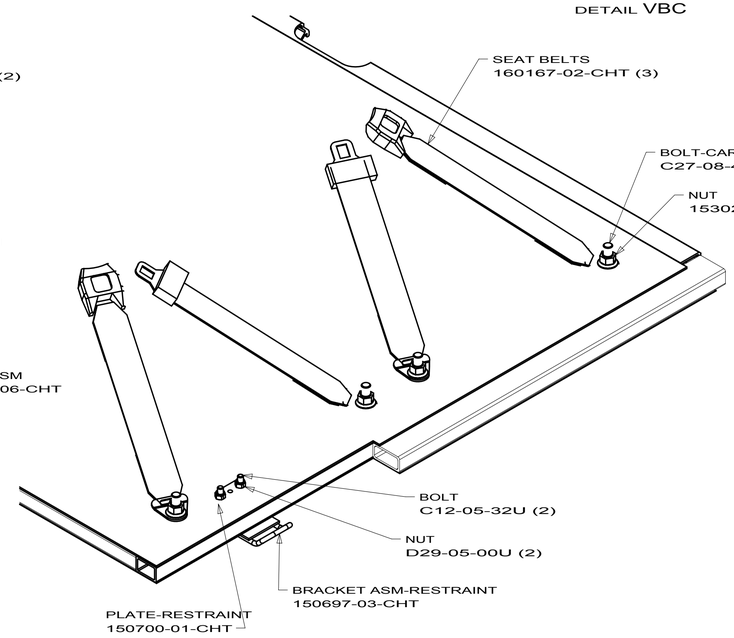

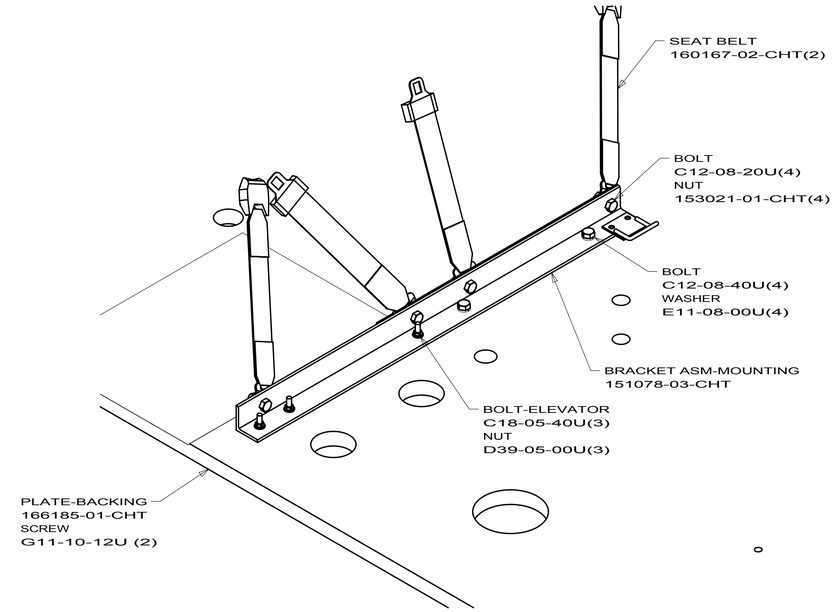

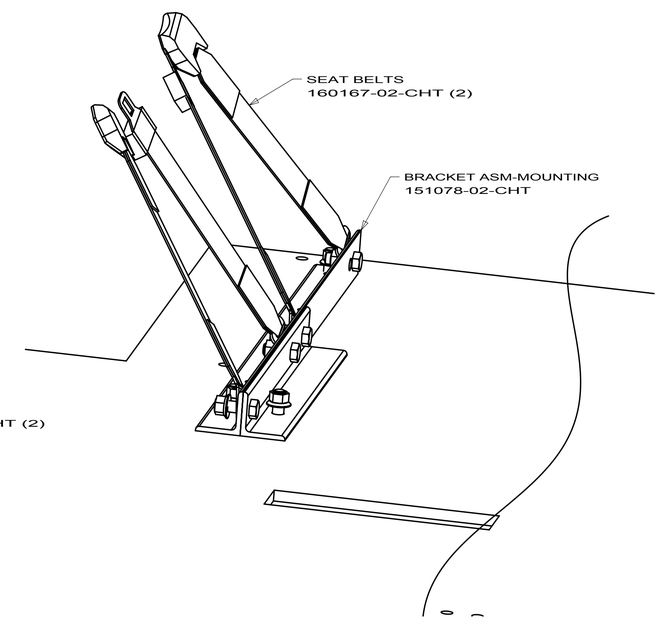

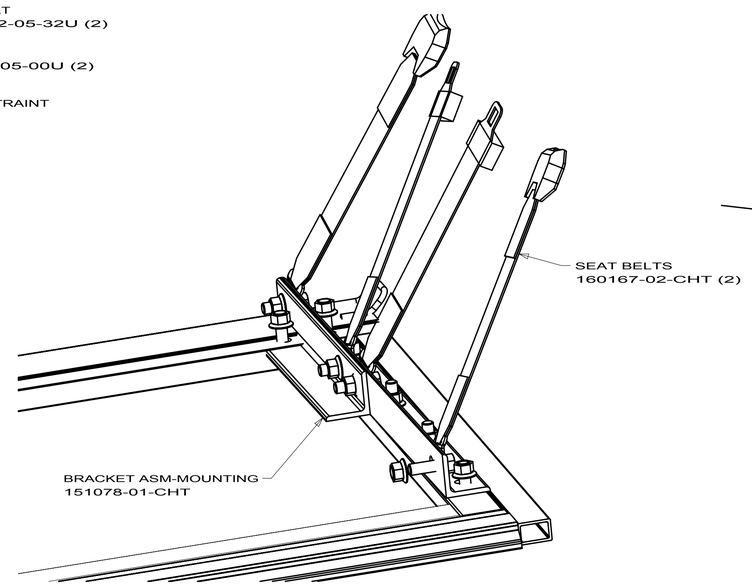

SEAT BELT
160167-01-CHT 2 X 102" BLACK
160167-02-CHT 2 X 90" BLACK

FIRST USED	07 MOTORHOMES
	DO NOT SCALE DRAWING
TITLE:	SEAT BELT INSTL
SHEET 1	PART NO 159417 REV

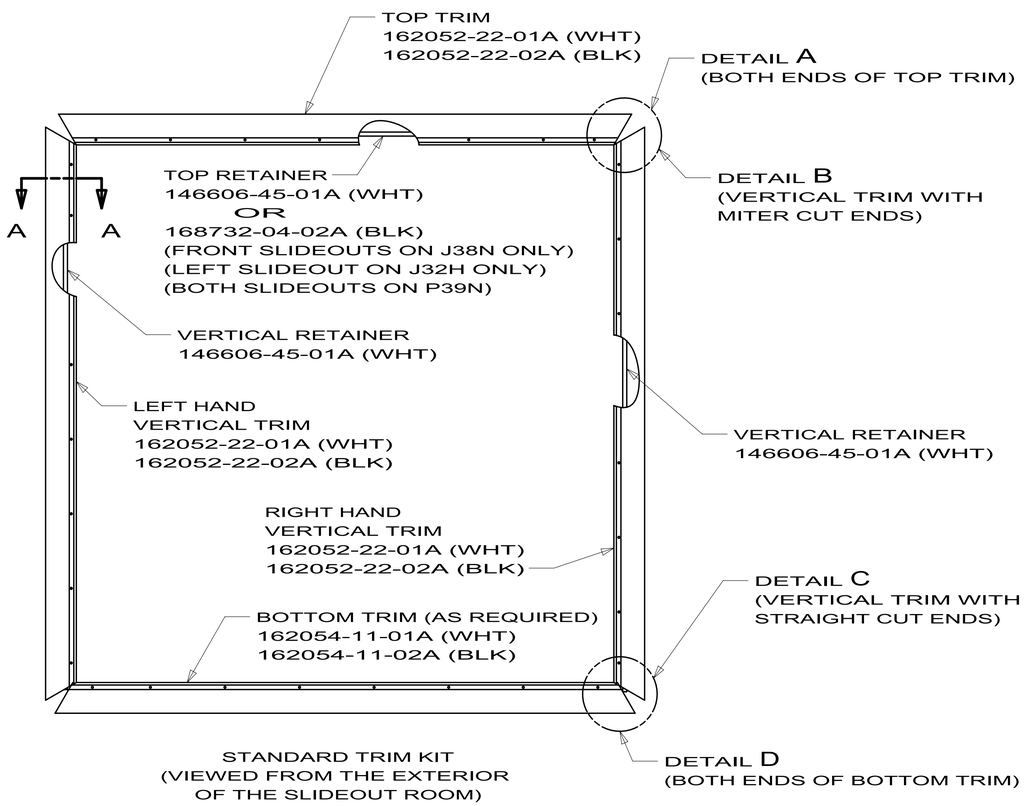

STANDARD TRIM KIT
(VIEWED FROM THE EXTERIOR
OF THE SLIDEOUT ROOM)

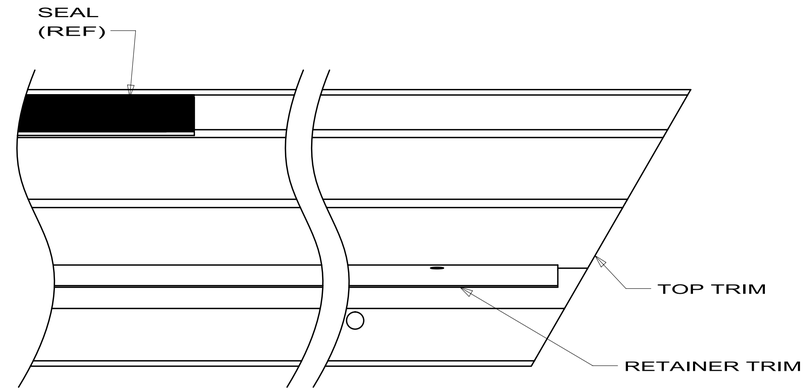

DETAIL A
(TOP TRIM)
(VIEWED FROM THE BACKSIDE OF THE TRIM)

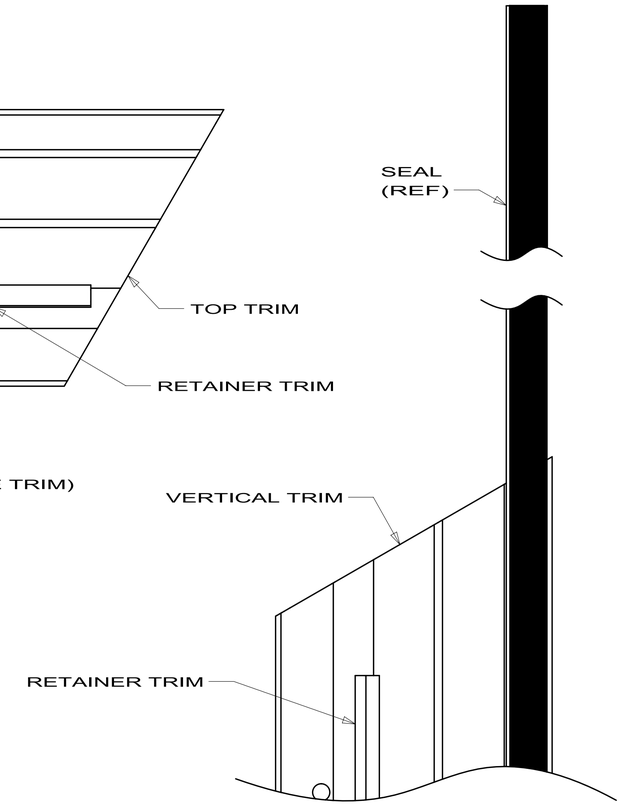

DETAIL B
(ALL MITER CUT VERTICAL TRIM)
(VIEWED FROM THE BACKSIDE OF THE TRIM)

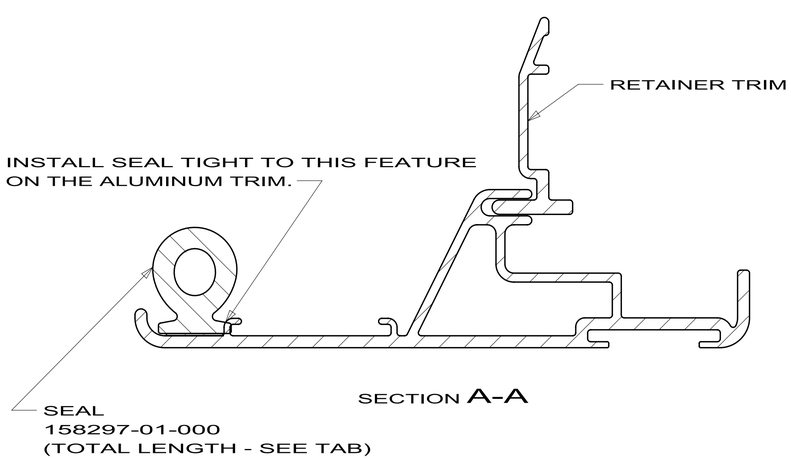

SECTION A-A

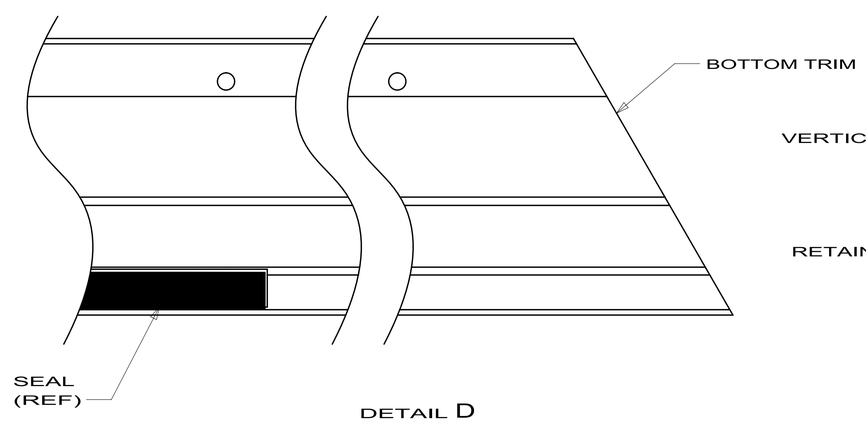

DETAIL D
(BOTTOM TRIM)
VIEWED FROM THE BACKSIDE OF THE TRIM)

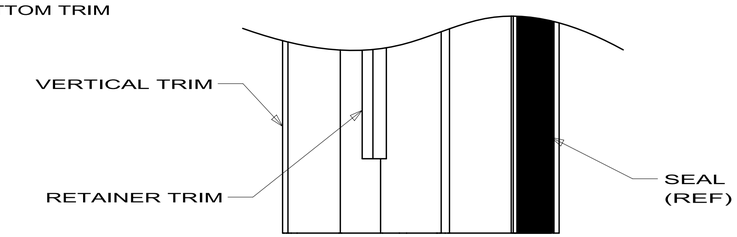

DETAIL C
(ALL STRAIGHT CUT VERTICAL TRIM)
(VIEWED FROM THE BACKSIDE OF THE TRIM)

2007 MOTORHOMES

TRIM KIT-EXTERIOR,SLIDEOUT

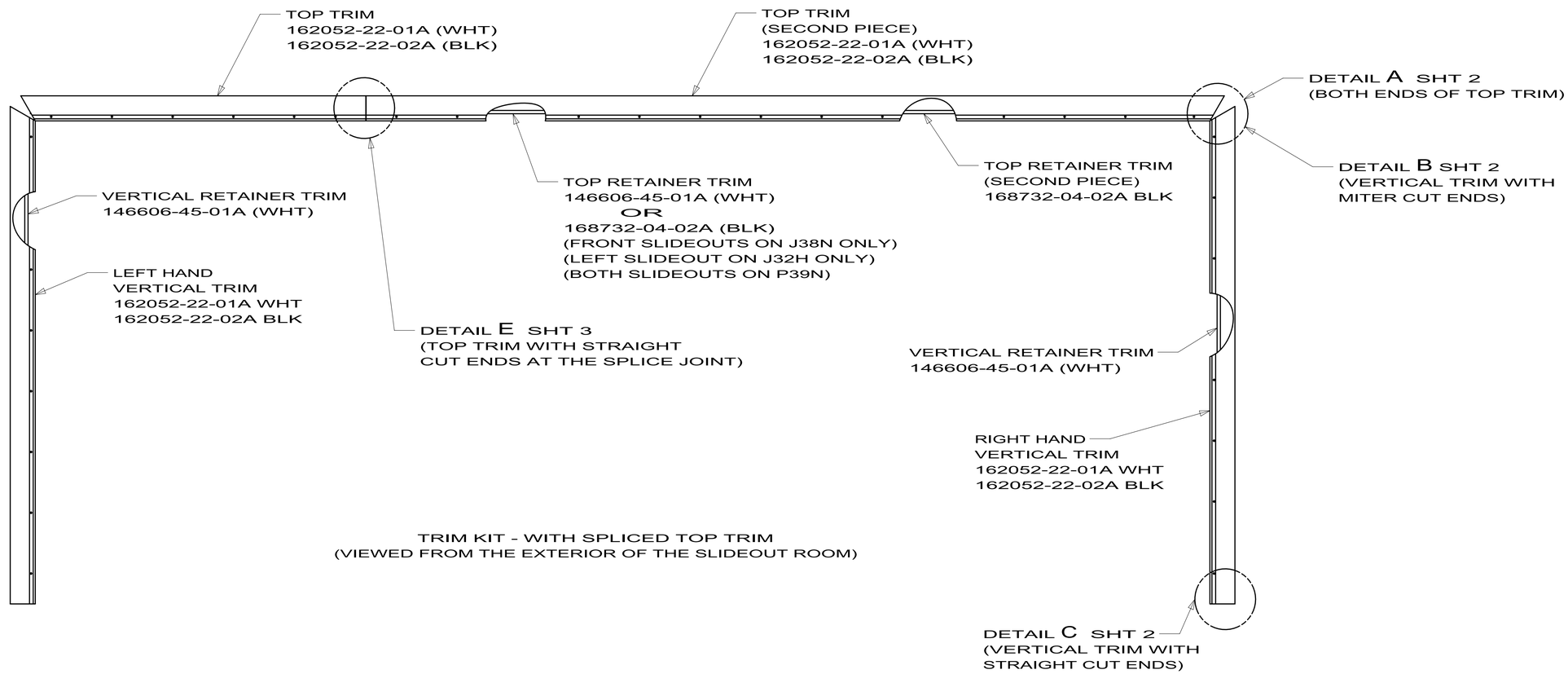

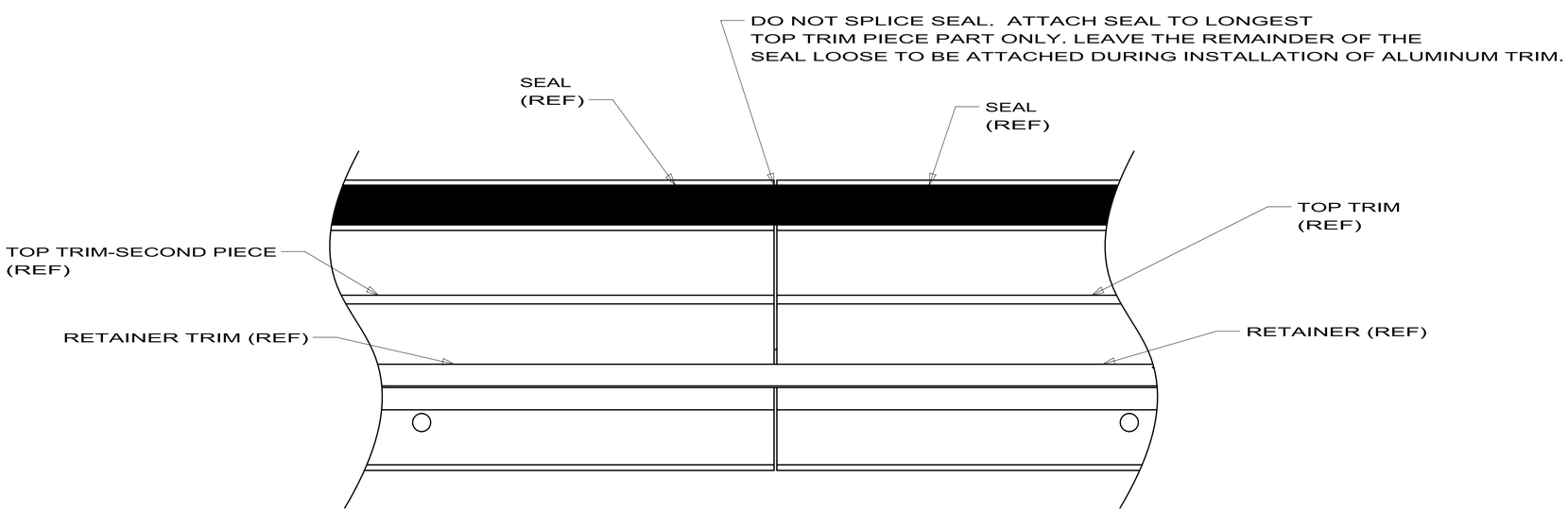

DETAIL E

(SPLICE IN TOP TRIM.)
(SHOWN FROM THE BACKSIDE OF TRIM.)

162106-01-000

KEY	PART NUMBER	U/M	DESCRIPTION	VENDOR NO.
	130294-04-700	EA	SCREW - 5/16"-18 X 1 1/2"	1202060
	131281-01-702	EA	PIN/CLEVIS - 1/4" PLATED	1213190
	131281-01-704	EA	HAIRPIN/COTTER - 3/8" SPRING	1213460
	131682-01-700	EA	ROLLER - (BEARING)	1912040
	138173-01-701	EA	POP RIVET - SS 3/16"X1/4"	1214630
	138173-01-707	EA	WEAR PUCK - PLASTIC F/DRIVE	1612523
	140457-01-701	EA	BUSHING - 1" X 3/4" X 1/2"ID	1614006
	140457-01-704	EA	SHAFT/AXLE - REAR ROLLER	7204523
	148875-01-700	EA	PIN/COTTER - 3/32" X 1/2"	1213520
	148875-01-701	EA	PIN/ROLL - 3/16" X 3/4"	1213693
	148875-01-702	EA	PIN/ROLL - 1/4" X 1"	1213701
	148875-01-703	EA	NUT - PLASTIC - 1"	1612548
	148875-01-704	EA	END CARRIER - PLASTIC - 1"	1612549
	148875-01-705	EA	MOTOR/LINEAR - SLIDE ROOM	1820111
	148875-01-707	EA	END GUIDE F/SCREW - 1"	1820450
	149165-01-701	EA	PIN/CLEVIS - 1/4" X 2"	1213204
	151027-01-700	EA	DRIVE SCREW 1" X 20"	1820402
	162106-01-700	EA	PLATE/SPACER RUB BLOCK	7207561
	162106-01-701	EA	BRACKET - MOUNT/SLIDE ROOM	7203183
	162106-01-702	EA	BRACKET - ANTI-CLOCK BLOCK	3010000238

162106-02-000

KEY	PART NUMBER	U/M	DESCRIPTION	VENDOR NO.
	130294-04-700	EA	SCREW - 5/16"-18 X 1 1/2"	1202060
	131281-01-702	EA	PIN/CLEVIS - 1/4" PLATED	1213190
	131281-01-704	EA	HAIRPIN/COTTER - 3/8" SPRING	1213460
	131682-01-700	EA	ROLLER - (BEARING)	1912040
	138173-01-701	EA	POP RIVET - SS 3/16"X1/4"	1214630
	138173-01-707	EA	WEAR PUCK - PLASTIC F/DRIVE	1612523
	140457-01-701	EA	BUSHING - 1" X 3/4" X 1/2"ID	1614006
	140457-01-704	EA	SHAFT/AXLE - REAR ROLLER	7204523
	148875-01-700	EA	PIN/COTTER - 3/32" X 1/2"	1213520
	148875-01-701	EA	PIN/ROLL - 3/16" X 3/4"	1213693
	148875-01-702	EA	PIN/ROLL - 1/4" X 1"	1213701
	148875-01-703	EA	NUT - PLASTIC - 1"	1612548
	148875-01-704	EA	END CARRIER - PLASTIC - 1"	1612549
	148875-01-705	EA	MOTOR/LINEAR - SLIDE ROOM	1820111
	148875-01-707	EA	END GUIDE F/SCREW - 1"	1820450
	149165-01-701	EA	PIN/CLEVIS - 1/4" X 2"	1213204
	151027-01-700	EA	DRIVE SCREW 1" X 20"	1820402
	162106-01-700	EA	PLATE/SPACER RUB BLOCK	7207561
	162106-01-701	EA	BRACKET - MOUNT/SLIDE ROOM	7203183

COPYRIGHT © 2009 WINNEBAGO INDUSTRIES INC.

162495-01-01A, 162495-02-01A

KEY	PART NUMBER	U/M	DESCRIPTION	VENDOR NO.
	162495-01-700	EA	BUTTON-DBL. PLAS. SNAP	DP130

COPYRIGHT © 2009 WINNEBAGO INDUSTRIES INC.

DWG NO 169233

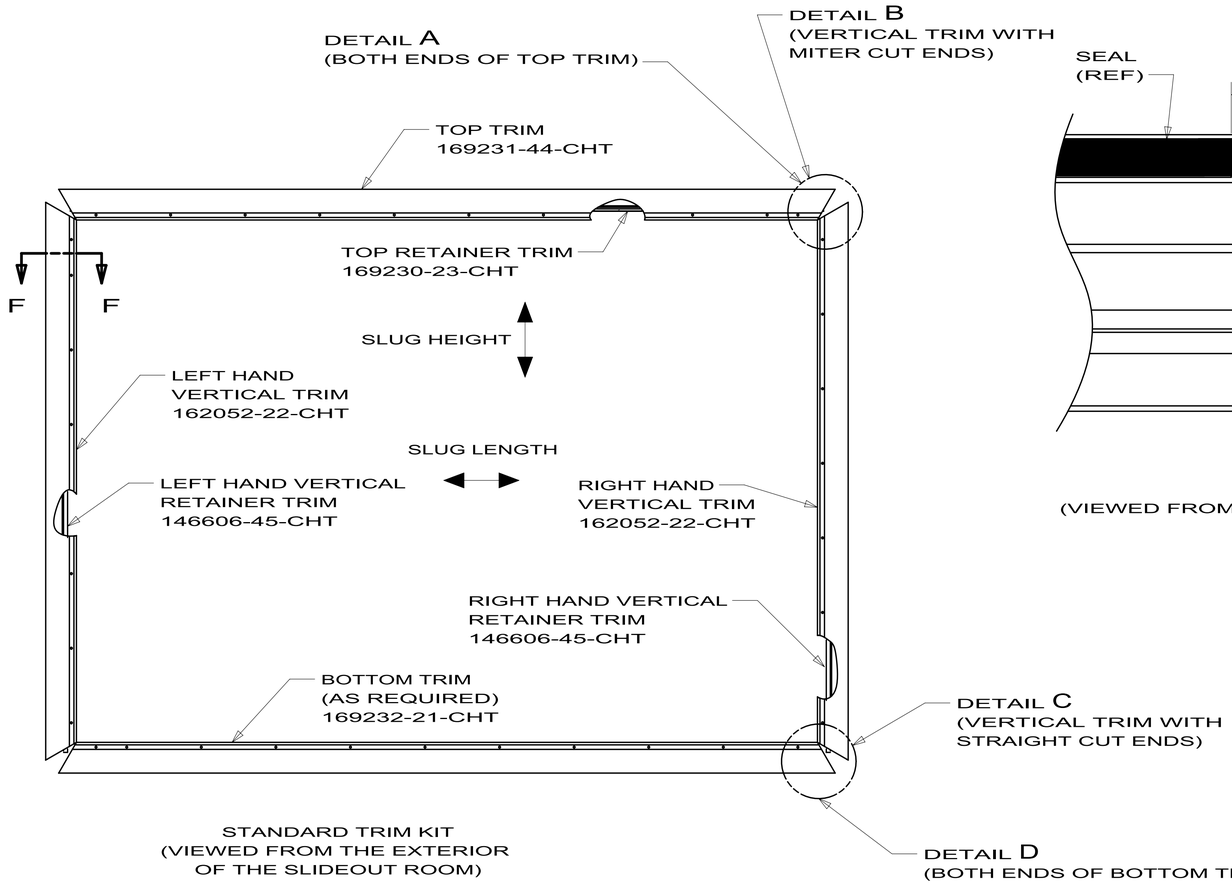

STANDARD TRIM KIT
(VIEWED FROM THE EXTERIOR
OF THE SLIDEOUT ROOM)

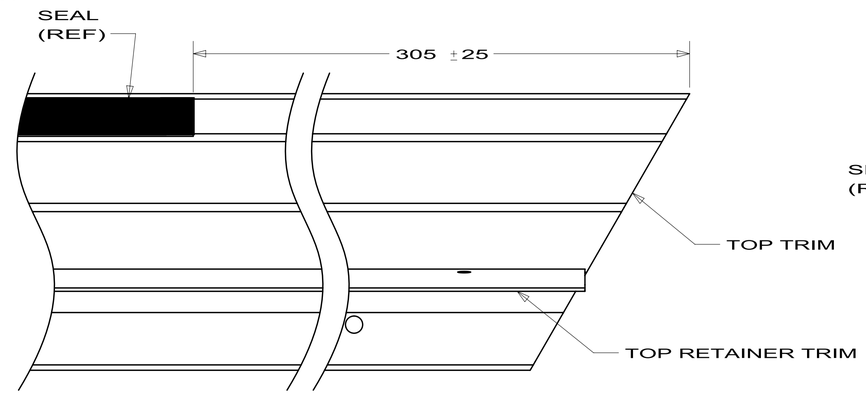

DETAIL A
(TOP TRIM)
(VIEWED FROM THE BACKSIDE OF THE TRIM)

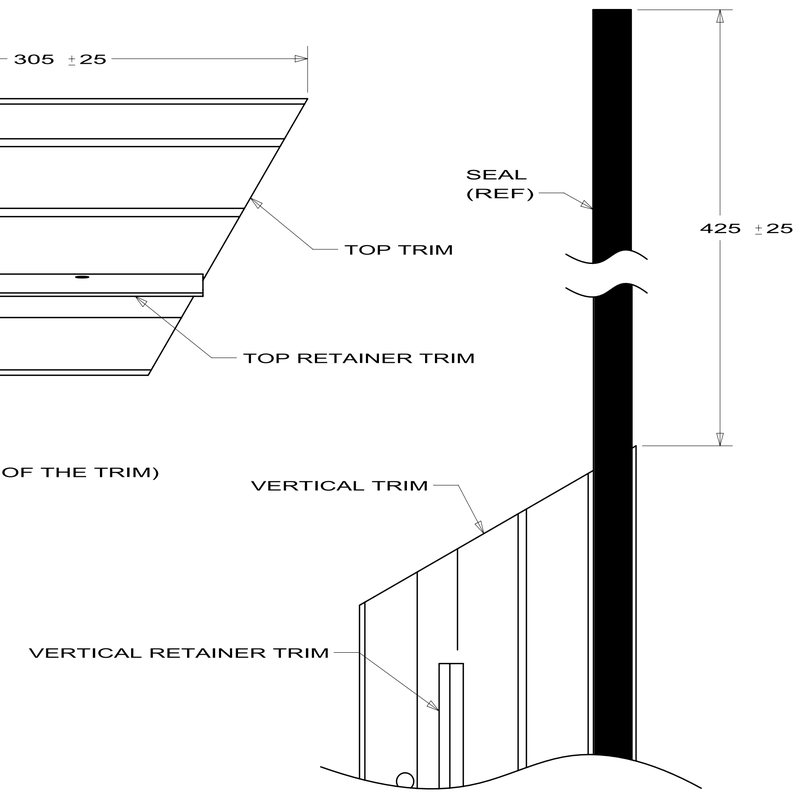

DETAIL B
(ALL MITER CUT VERTICAL TRIM)
(VIEWED FROM THE BACKSIDE OF THE TRIM)

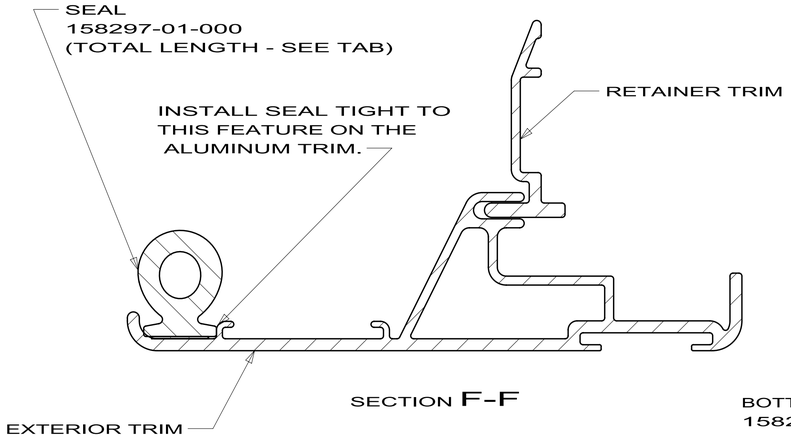

SECTION F-F

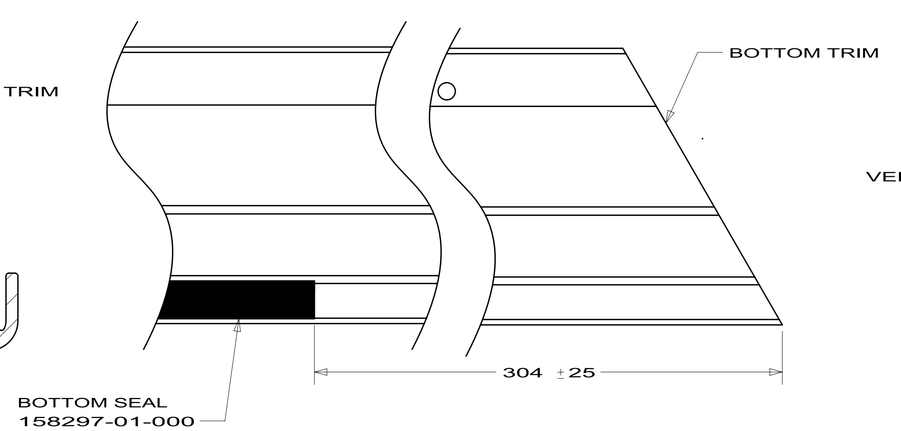

DETAIL D
(BOTTOM TRIM)
VIEWED FROM THE BACKSIDE OF THE TRIM)

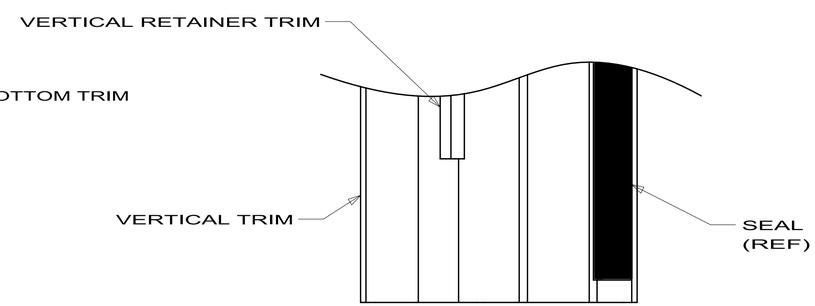

DETAIL C
(ALL STRAIGHT CUT VERTICAL TRIM)
(VIEWED FROM THE BACKSIDE OF THE TRIM)

FIRST USED	2010 MOTORHOMES
	DO NOT SCALE DRAWING
TITLE:	TRIM KIT-EXTERIOR,SLIDEOUT
SHEET 1	PART NO 169233 REV

DWG NO 169233

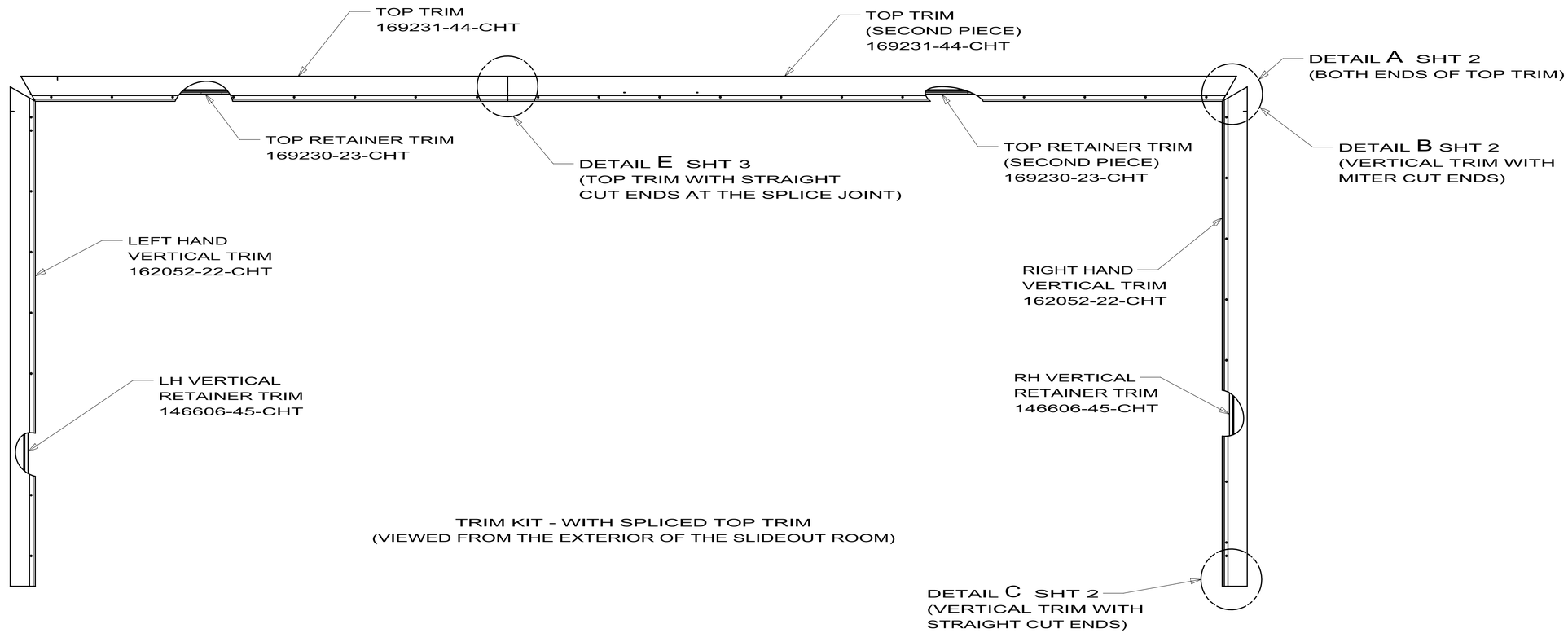

TRIM KIT - WITH SPLICED TOP TRIM
(VIEWED FROM THE EXTERIOR OF THE SLIDEOUT ROOM)

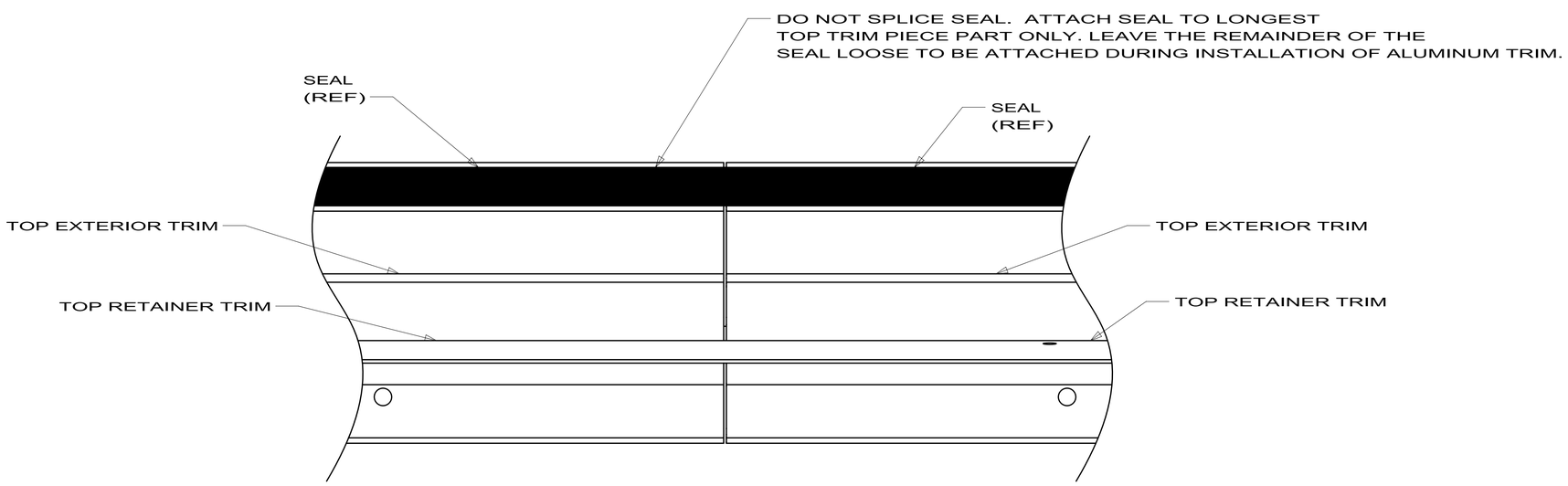

DETAIL E
(SPLICE IN TOP TRIM.)
(SHOWN FROM THE BACKSIDE OF TRIM.)

FIRST USED	2010 MOTORHOMES
	DO NOT SCALE DRAWING
TITLE:	TRIM KIT-EXTERIOR,SLIDEOUT
SHEET 4	PART NO 169233 REV

174525-01-000

KEY	PART NUMBER	U/M	DESCRIPTION	VENDOR NO.
	161662-01-703	EA	ROLLER - 2"	510022
	161662-01-704	EA	PAD/WEAR	DN10936
	161662-01-707	EA	KEY/WOODRUFF - #606	521336
	161662-01-711	EA	ROLLER/PLASTIC - 3/4" X 2.9"	3010000401
	172400-01-702	EA	SET SCREW 5/8"-18 X 1/2"	150-1546
	172400-01-703	EA	BEARING STEP 3/4" ID	1102005
	172400-01-704	EA	GEAR/SPUR 3/4" ID X 2" OD	3010000400
	172400-01-705	EA	WEAR PAD - ROUND	320-0056
	172400-01-706	EA	COUPLING - HEX 3/4" ID	520223
	172400-01-708	EA	PIN - COILED 1/4" X 1 1/4"	18-1007
	172400-01-709	EA	MOTOR W/LONG SHAFT	1010001874
	172400-01-710	EA	BEARING STEP 1" ID	1102000
	174525-01-700	EA	CLIP - HITCH PIN .125"	18-1065
	174525-01-701	EA	COTTER PIN	VF11500
	174525-01-702	EA	BOLT/SHOULDER - 1/2"OD X .88	15-1378
	174525-01-703	EA	NUT/CENTERLOCK - 3/8"-16 N/C	15-1341
	174525-01-704	EA	RAIL - INNER W/DRIVE	1010001988

COPYRIGHT © 2010 WINNEBAGO INDUSTRIES INC.