RELEASE	REV A	DATE	DWG NO 116229

REV	ZONE	REVISION RECORD	DATE	DFTR-ORIG

N-5	010129-05-000	NIPPLE-PLAS 3" X 10" TOE
N-4	010129-04-000	NIPPLE-PLAS 3" X 7 5/8" TOE
N-3	010129-03-000	NIPPLE-PLAS 3" X 3" TOE
N-2	010129-01-000	NIPPLE-PLAS 3" X 2 5/8" TOE
N-1	102024-01-000	NIPPLE-PLAS 1 1/2" X 2 5/8" TOE
H-2	139513-02-000	HOSE ASM-SEWER 3" ID X 20 FT
H-1	139513-01-000	HOSE ASM-SEWER 3"IDX10FT(062416-01-000ADAPTER)
G-2	061607-02-000	GROMMET
G-1	061607-01-000	GROMMET
F-8	116644-02-000	FLANGE-CLOSET 4" X 3"MPT (2)
F-7	116644-01-000	FLANGE-CLOSET 4" X 3" (2)
F-6	148914-01-000	FLANGE-CLOSET 4" X 3" MPT
F-5	063641-01-000	FLANGE-CLOSET 4" X 3"
F-3	024676-01-000	FLANGE-CLOSET 4" X 3"
E-19	170414-01-000	ELBOW-3X3X1 1/2 W/HEEL
E-18	010062-01-000	ELBOW-ST-PLAS 3" X 90° SPIGOT X H
E-17	126589-01-000	ELBOW 1 1/2" X90° ,SLIP BY FEMALE NUT
E-16	125569-01-000	ELBOW 1 1/2" X 90° DBL SLIP
E-15	010005-01-000	ELBOW-PLAS 1/16"DB 1 1/2" X 22 1/2
(3) E-14	010009-01-000	ELBOW-ST-PLAS 1/4"BD 1 1/2" X 90°
E-13	031126-01-000	ELBOW 3" X EXTRA LONG TURN
E-12	037101-01-000	ELBOW 90° SHORT TURN
E-11	041956-01-000	ELBOW 3" X 90° EXTRA LONG TURN
E-10	010061-01-000	ELBOW 3" X 45° S
E-9	010024-01-000	ELBOW 3" X 45°
E-7	010023-01-000	ELBOW-PLAS-ST 1/16"BD 3" X 22.5'
E-6	010008-01-000	ELBOW 1 1/2" X 90° EXTRA LONG TURN
E-5	010051-01-000	ELBOW 1 1/2" X 45° S
E-3	033761-01-000	ELBOW 1 1/2" X 90° EXTRA LONG STREET
E-2	034250-01-000	ELBOW 1 1/2" X 90° LONG TURN
E-1	010006-01-000	ELBOW-PLAS 1/8"DB 1 1/2" X 45° HXH
CP-2	150034-02-CHT	CAP ASM-VENT PIPE, ROOF
CP-1	062415-01-000	CAP-SEWER 3"
C-4	089355-01-000	COUPLER-RUBBER 1 1/2" X 1 1/2"
C-3	010115-01-000	COUPLER 1 1/2" X 1 1/2"
C-2	078406-01-000	COUPLER-RUBBER 3" X 3"
B-3	010122-02-000	BUSHING 1 1/2" X 1 1/4"T CSA
B-2	010122-01-000	BUSHING 1 1/2" X 1 1/4"T
B-1	010123-01-000	BUSHING 2" X 1 1/2"
A-15	152146-01-000	CONNECTOR- 1 1/2 P x 1 1/2 MPT
A-14	130685-03-000	1 1/2" MALE ACME X SPIGOT
A-13	130685-02-000	1 1/2" MALE ACME X SOCKET
A-12	130685-01-000	1 1/2" FEMALE ACME X SOCKET
A-11	126425-02-000	ADAPTER-SWIVEL 1 1/2" FPT X SPIGOT
A-10	126425-01-000	ADAPTER-SWIVEL 1 1/2" FPT X H
A-9	126424-01-000	ADAPTER-1 1/2" MPT X 1/2" H
A-8	109571-01-000	ADAPTER-1 1/2" X 1 1/4" MPT
A-6	062416-01-000	HOSE-ADAPTER 3"
A-4	062417-01-000	ADAPTER-3"
A-2	109450-01-000	ADAPTER-PLASTIC HOSE, SEWER
A-1	062422-01-000	ADAPTER-OFFSET REDUCER 3" X 1 1/2"
NO.	P/N	DESCRIPTION

3	126426-01-000	PIPE-FLEX 1 1/2"
2	010197-01-000	PIPE 3"
	010197-02-000	PIPE 3" BLK CSA
1	010195-01-000	PIPE 1 1/2"
	010195-02-000	PIPE 1 1/2" CSA
Y-1	010073-01-000	WYE 1 1/2" X 45° H X H X H
W-7	127440-02-CHT	WASHER-RUBBER 3.2 THICK
W-6	127440-01-CHT	WASHER-RUBBER 1.5 THICK
W-5	011091-05-000	CONTINUOUS WASTE 1 1/4"
W-2	011091-02-000	CONTINUOUS WASTE 1 1/4"
VM-1	079968-01-000	VENT-MECHANICAL
V-12	136143-02-000	VALVE-DUAL 3" X 3" X SPIGOT
V-11	136143-01-000	VALVE-DUAL 3" X 3"
V-10	062418-03-000	VALVE-DUAL 3", SPIGOT X SPIGOT
V-9	070916-03-000	VALVE-DUAL 3" & 1 1/2"
V-8	070916-02-000	VALVE-DUAL 3" & 1 1/2"
V-7	062418-01-000	VALVE 3" W/HANDLE
V-6	062418-02-000	VALVE 3" W/O HANDLE
V-4	062421-02-000	VALVE 1 1/2" W/O HANDLE
V-3	062421-01-000	VALVE 1 1/2" W/HANDLE
V-1	070916-01-000	VALVE-DUAL 3" & 1 1/2"
SP-7	131786-08-CHT	SPACER TOILET
SP-6	131786-07-CHT	SPACER TOILET .78
SP-5	131786-05-CHT	SPACER-TOILET 1 1/4" (THETFORD)
SP-4	131786-04-CHT	SPACER-TOILET 1 1/4" (AQUA IV)
SP-3	131786-03-CHT	SPACER-TOILET 1 1/4" (SEALAND)
SP-2	131786-02-CHT	SPACER-TOILET (THETFORD AQUA IV)
SP-1	131786-01-CHT	SPACER-TOILET (SEALAND)
T-6	136664-01-000	TEE-PLAS 3" S X H X H
T-5	010065-01-000	TEE-PLAS 3" H X H X H
T-4	031365-02-000	TEE-PLAS 1 1/2" EXTRA LONG TURN
T-3	010071-02-000	TEE-PLAS 1 1/2" W/BAFFLE
T-2	031365-01-000	TEE-PLAS 3" X 3" X 1 1/2" EXT LG TUR
T-1	010071-01-000	TEE 1 1/2" X 1 1/2" X 1 1/2"
S-1	116666-01-CHT	SEAL-VENT PIPE
PL-2	010166-02-000	PLUG 1 1/4" MPT CSA
PL-1	010166-01-000	PLUG 1 1/4" MPT
P-8	126588-03-000	ARM-WASTE 1 1/2" X 9 1/2" SLIP
P-7	126588-02-000	ARM-WASTE 1 1/2" X 20", FEMALE NUT
P-6	126588-01-000	ARM-WASTE 1 1/2" X 9 1/2",FEMALE NUT
P-4	037763-01-000	P-TRAP-PLASTIC 1 1/2"H X H W/UNION
P-3	011071-01-000	P-TRAP 1 1/2" X 1 1/2" OR 1 1/4"-CSA
P-2	107538-01-000	P-TRAP-PLASTIC 1 1/4" W/EXT ARM, US
P-1	107538-02-000	P-TRAP-PLASTIC 1 1/2" W/EXT ARM, US
NO.	P/N	DESCRIPTION

(3) PART IS ALSO LISTED ON WATER SYSTEM PART LIST DRAWING #116230.

(2) USE WITH SEALAND BRAND TOILETS ONLY.

(1) INACTIVE.

WINNEBAGO INDUSTRIES

COPYRIGHT 2009
WINNEBAGO
INDUSTRIES, INC.

DFTR | ORIG. DATE
CHKR | ALL DIMENSIONS ARE IN MILLIMETERS
P.E.
M.E. | FIRST USED: 95 MH'S
DSNR

UNSPECIFIED TOLERANCES ARE:
WHOLE DIM (X) : 7
ONE-PLACE (X.X) :
TWO-PLACE (X.XX) :
ANGLE :

MATERIAL:

THIRD ANGLE PROJECTION

DO NOT SCALE DRAWING

TITLE: PART LISTING-DRAINAGE SYSTEM

SHEET 1 OF 1 | PART NO. 116229 | REV

REF:

10/22/2009

RELEASE	REV A	DATE	DWG NO 173240

REV	ZONE	REVISION RECORD	DATE	DFTR-ORIG

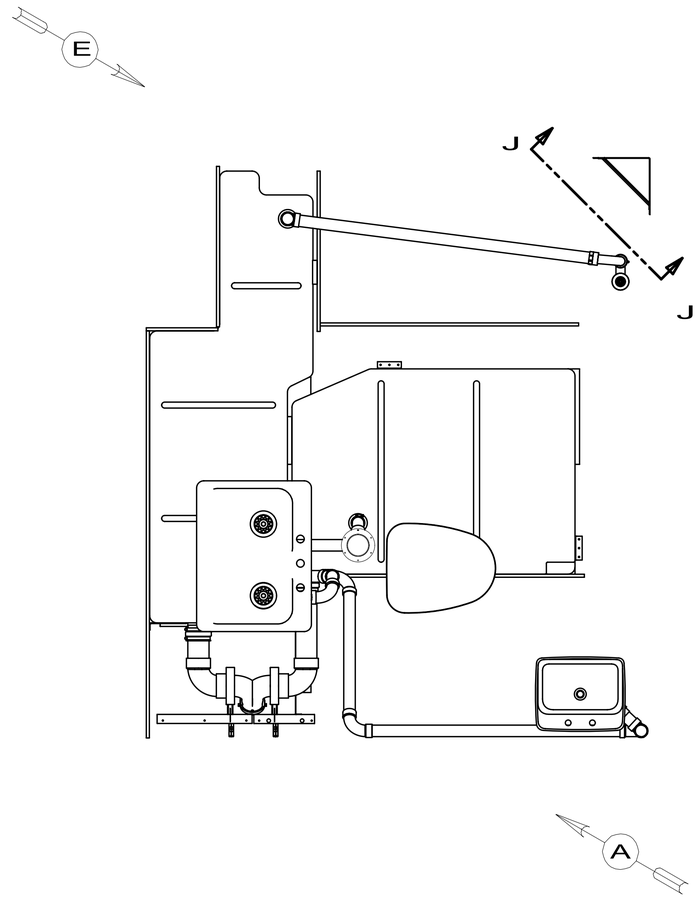

FRONT
OF
COACH

265 CODES/STDS-CSA/CMVSS

1B1 CODES/STANDARDS-USA

6 VENT PIPE MUST PROJECT 51 MIN AND 64 MAX ABOVE ROOF FOR PROPER FIT AND FUNCTION.

5. SEAL AROUND SHOWER WITH SILICONE.

4. SECURE VENT TUBES TO FLOOR WITH BRACKET 136878-01-CHT (2). CLAMP 062401-02-000 AND SCREW 000G67-10-12B (2)

3. ALL PIPE AND FITTINGS TO BE ASSEMBLED WITH SOLVENT 004020-01-000 (US), 004020-02-000 (CAN).

2. SLOPE OF TRAP ARM MUST BE 6 PER 305 mm.

1. SLOPE OF HORIZONTAL PIPING TO BE MIN 3 PER 305 mm.

NOTES:

X-X FOR DRAINAGE CALLOUTS SEE DWG NO 116229-01-000

WINNEBAGO INDUSTRIES

COPYRIGHT 2010
WINNEBAGO
INDUSTRIES, INC.

DFTR	ORIG. DATE
CHKR	ALL DIMENSIONS ARE IN MILLIMETERS
P.E.	
M.E.	FIRST USED
DSNR	10 E30W

UNSPECIFIED TOLERANCES ARE:
WHOLE DIM (X) : 3
ONE-PLACE (X.X) :
TWO-PLACE (X.XX) :
ANGLE :

MATERIAL:

THIRD ANGLE PROJECTION

DO NOT SCALE DRAWING

REFER TO ES0018 FOR FASTENER TIGHTENING GUIDELINES

TITLE:
DRAINAGE SYSTEM INSTL

SHEET 1 OF 4 | PART NO 173240 | REV

REF: 1

3/9/2010

DWG NO 173240

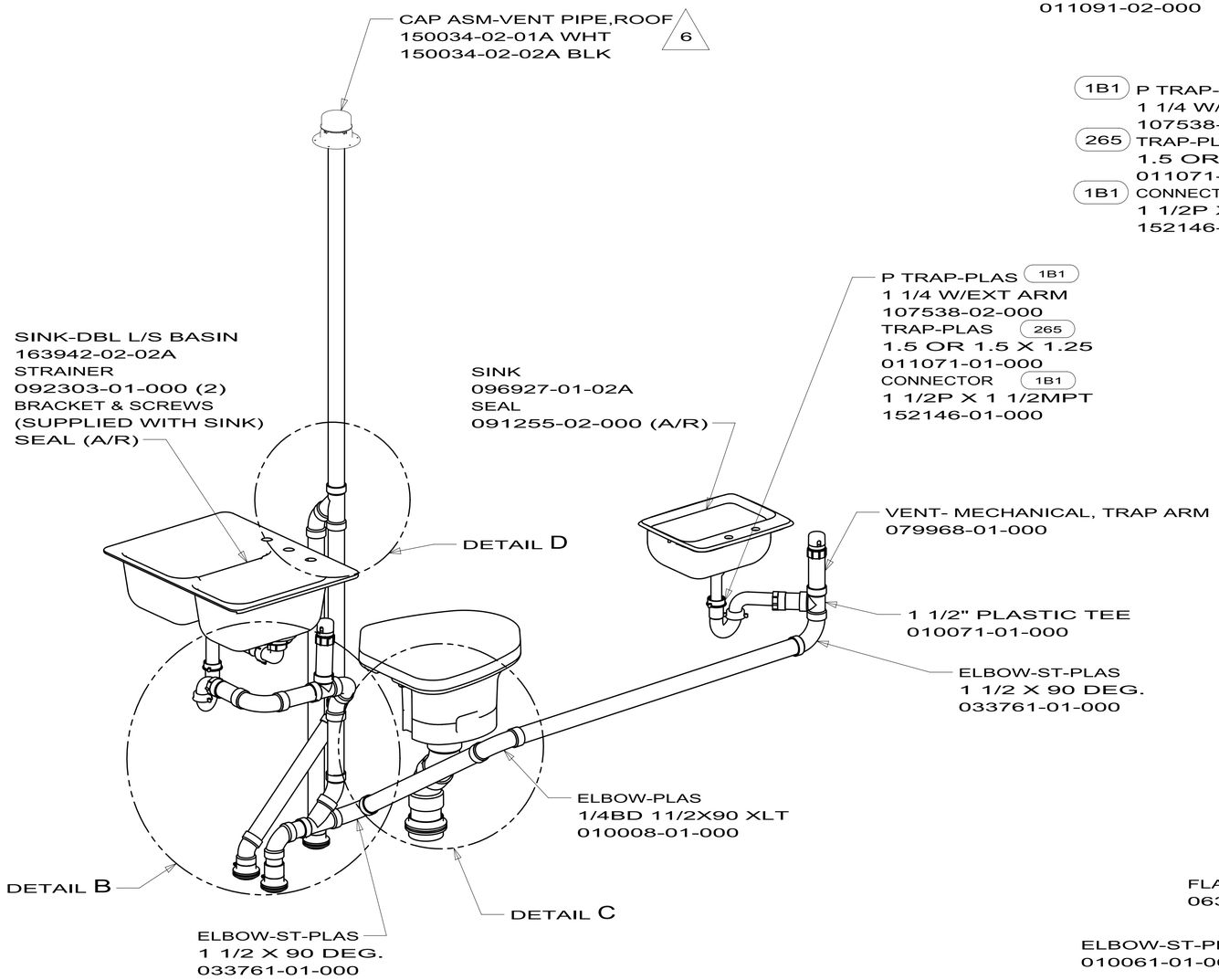

VIEW A

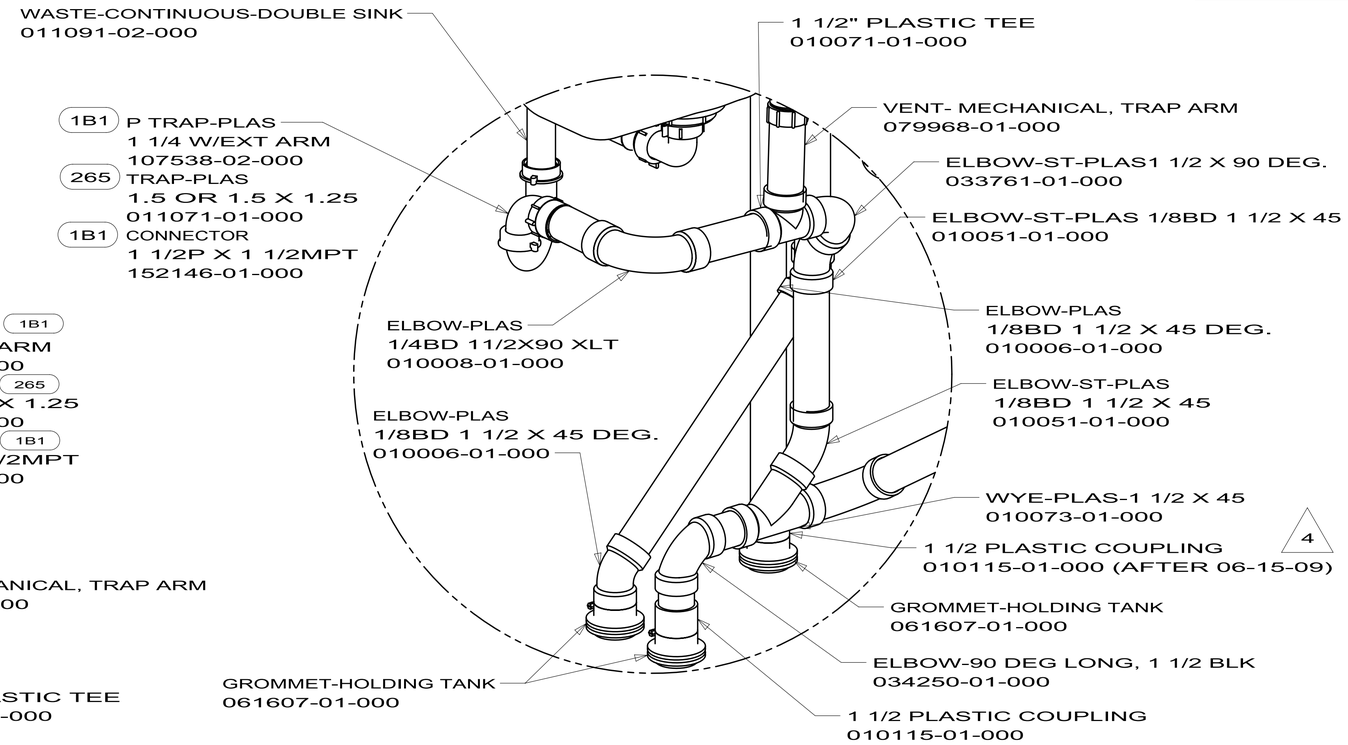

DETAIL B
(SHOWN W/OUT CABINETS AND FLOOR)

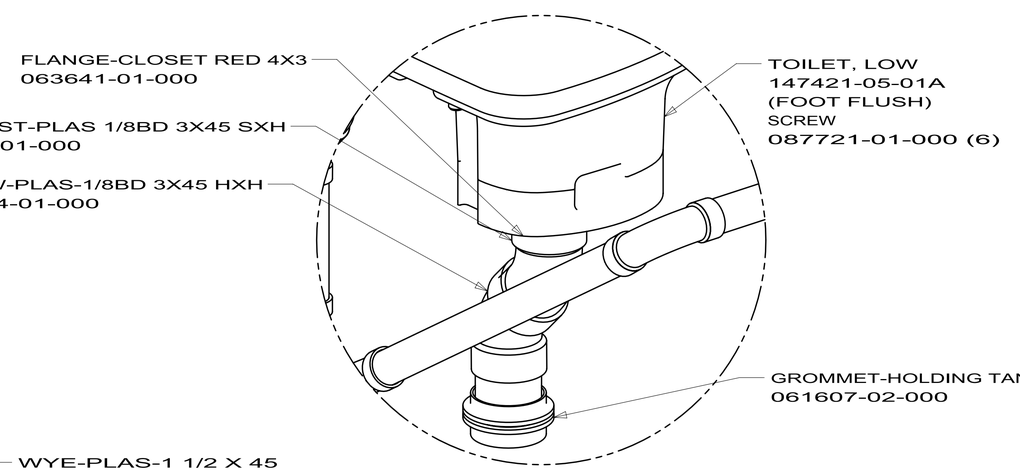

DETAIL C
(SHOWN W/OUT CABINETS AND FLOOR)

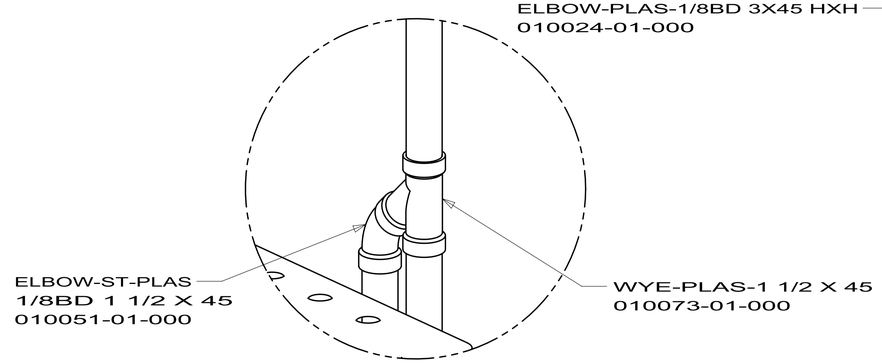

DETAIL D
(SHOWN W/OUT CABINETS)

FIRST USED	10 E30W
	DO NOT SCALE DRAWING
TITLE:	DRAINAGE SYSTEM INSTL
SHEET 2	PART NO 173240 REV

3/9/2010

DWG NO 173240

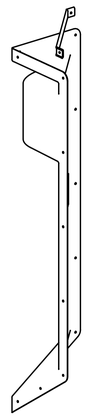

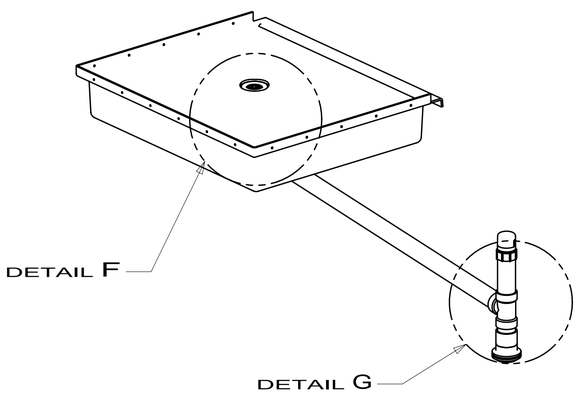

VIEW E

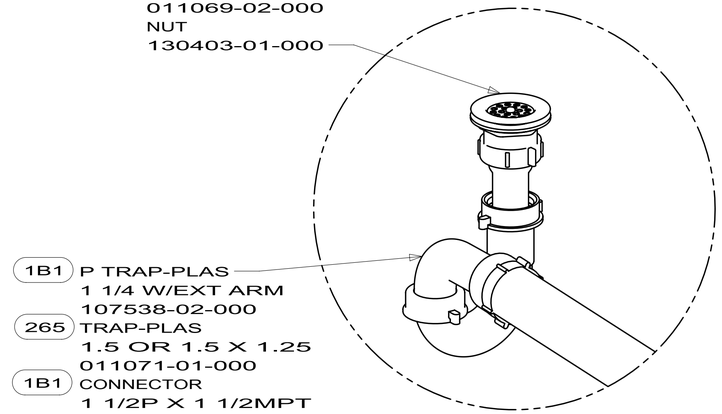

DETAIL F
(SHOWN W/OUT SHOWER PAN AND FLOOR)

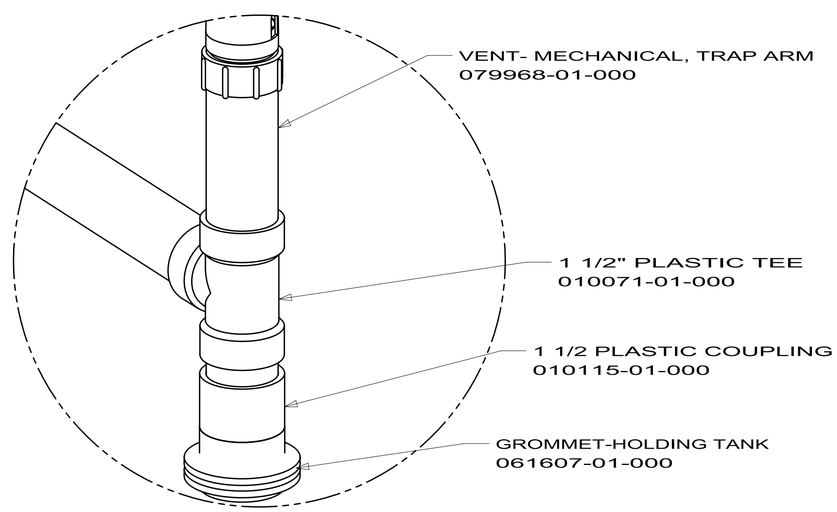

DETAIL G
(SHOWN W/OUT CABINETS AND FLOOR)

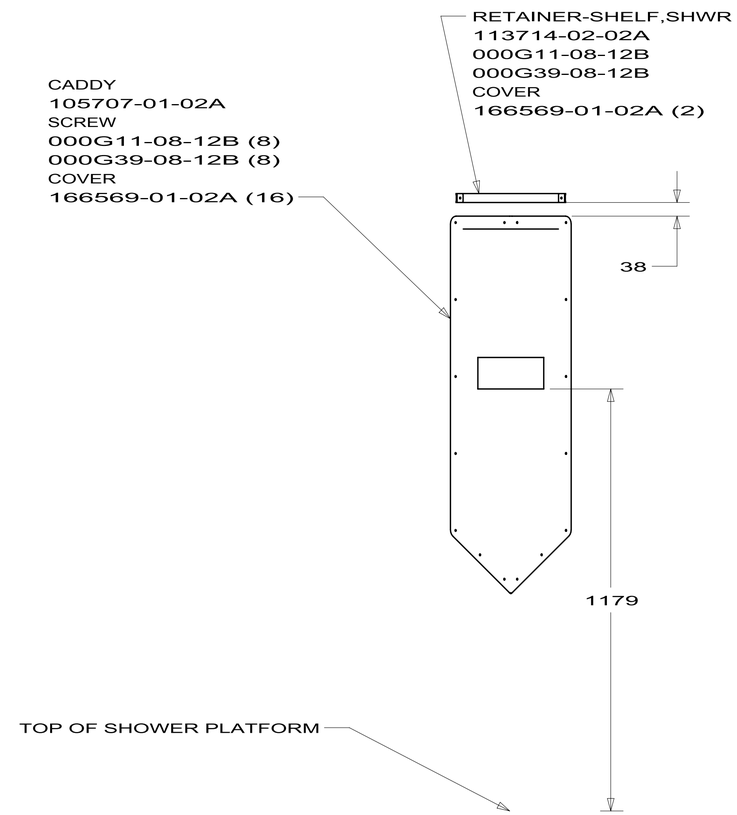

SECTION J–J

FIRST USED	10 E30W
	DO NOT SCALE DRAWING
TITLE:	DRAINAGE SYSTEM INSTL
SHEET 3	PART NO 173240 REV

3/9/2010

DWG NO 173240

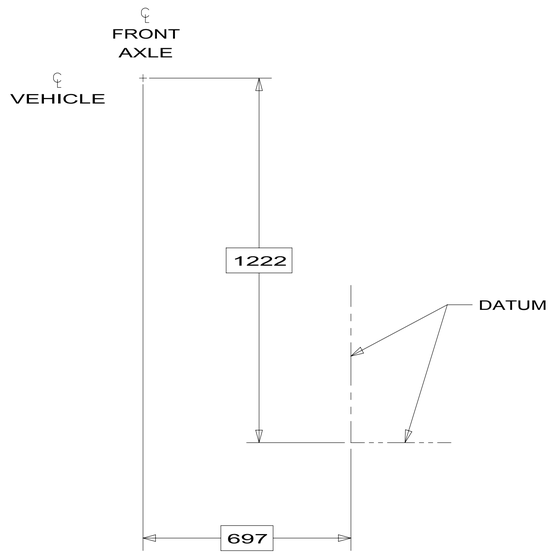

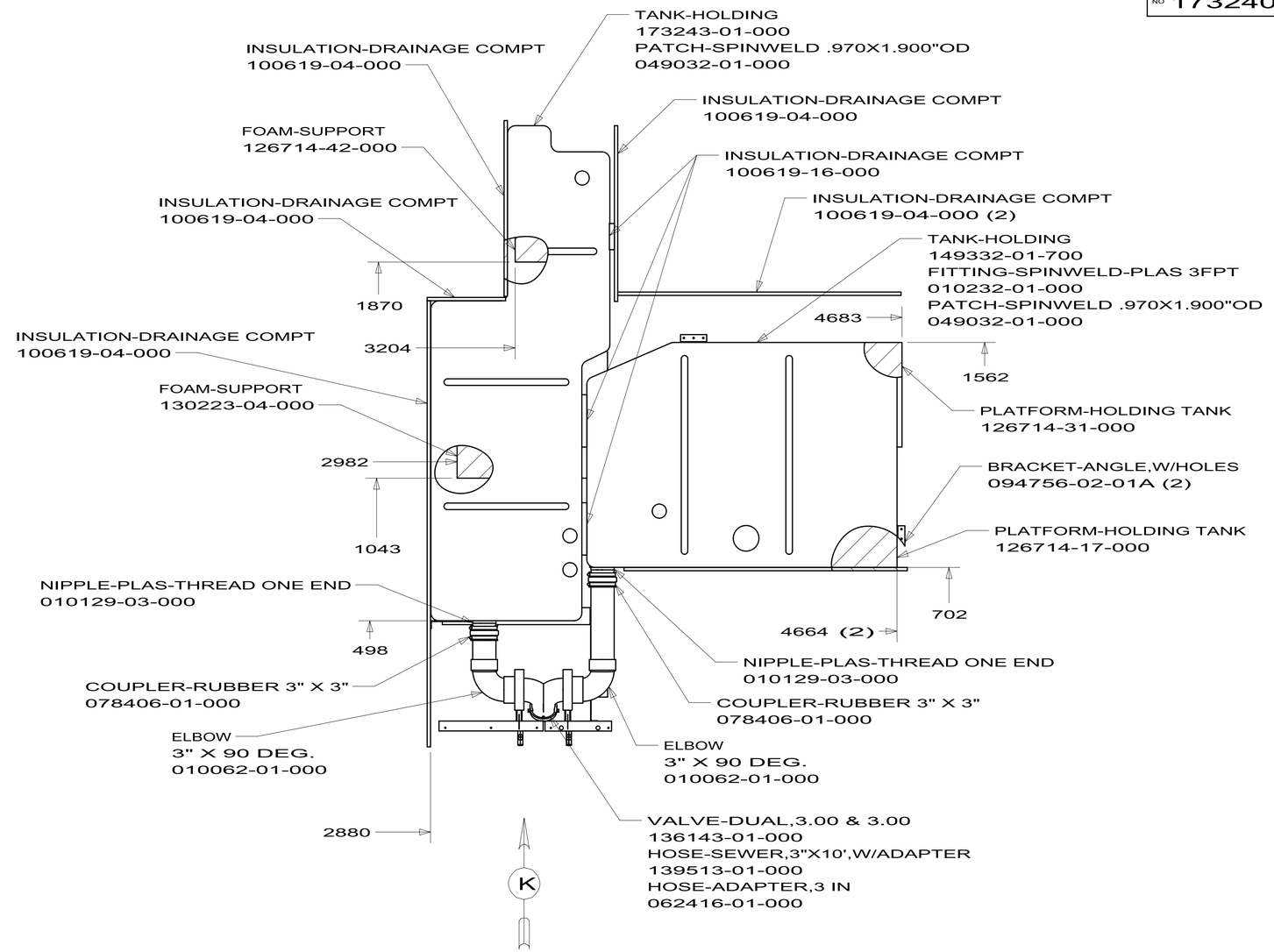

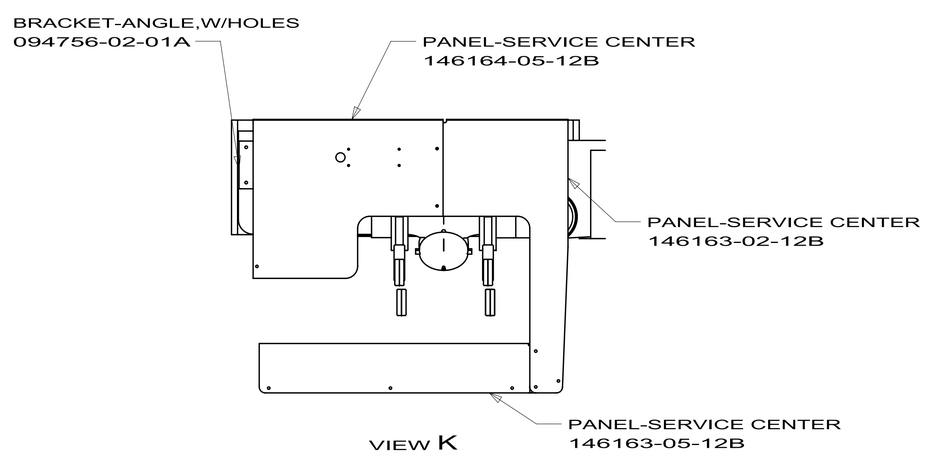

VIEW K

FIRST USED	10 E30W
	DO NOT SCALE DRAWING
TITLE:	DRAINAGE SYSTEM INSTL
SHEET 4	PART NO 173240 REV

3/9/2010

096927-01-02A

KEY	PART NUMBER	U/M	DESCRIPTION	VENDOR NO.
	096927-01-700	EA	SINK STOPPER	M9801
	096927-01-701	EA	TAILPIECE-DRAIN-LAVATORY	M9802

COPYRIGHT © 2009 WINNEBAGO INDUSTRIES INC.

136143-01-000

KEY	PART NUMBER	U/M	DESCRIPTION	VENDOR NO.
	070916-01-700	EA	VALVE ONLY	T1003B4

COPYRIGHT © 2009 WINNEBAGO INDUSTRIES INC.

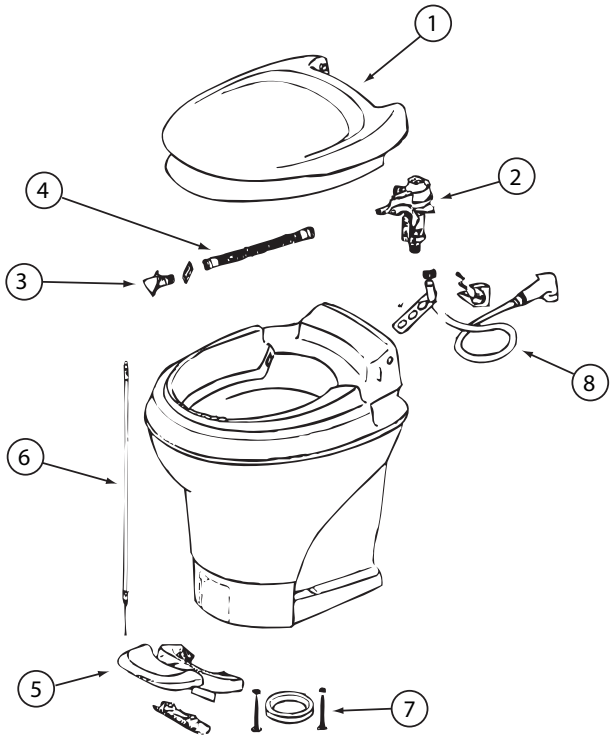

147421-01-01A, 147421-02-01A

KEY	PART NUMBER	U/M	DESCRIPTION	VENDOR NO.
1	147421-01-700	EA	SEAT & COVER ASSEMBLY(WHT)	31703
2	147421-01-701	EA	WATER MODULE ASSEMBLY	31705
3	147421-01-702	EA	NOZZLE ASSEMBLY	31706
4	147421-01-703	EA	LINK - WATER MODULE	31621
5	147421-01-704	EA	PEDAL - WHITE	31709
6	147421-01-705	EA	FOOT CABLE	31711
7	063740-01-706	EA	BOLT PACKAGE-FLOOR FLANGE	12524 THETFORD
8	147421-01-708	EA	HAND SPRAY KIT - WHITE HEAD	33226
	147421-01-706	EA	SEAL - BLADE	31708
	147421-01-707	EA	CAP (UNIVERSAL BOLT) - WHITE	31713

147421-03-01A

KEY	PART NUMBER	U/M	DESCRIPTION	VENDOR NO.
1	147421-01-700	EA	SEAT & COVER ASSEMBLY(WHT)	31703
2	147421-01-701	EA	WATER MODULE ASSEMBLY	31705
3	147421-01-702	EA	NOZZLE ASSEMBLY	31706
4	147421-01-703	EA	LINK - WATER MODULE	31621
5	147421-01-704	EA	PEDAL - WHITE	31709
6	147421-01-705	EA	FOOT CABLE	31711
7	063740-01-706	EA	BOLT PACKAGE-FLOOR FLANGE	12524 THETFORD
	147421-01-706	EA	SEAL - BLADE	31708
	147421-01-707	EA	CAP (UNIVERSAL BOLT) - WHITE	31713

CONTACT WINNEBAGO PART SALES FOR UNLISTED COMPONENT(S)

147421-04-01A, 147421-05-01A

KEY	PART NUMBER	U/M	DESCRIPTION	VENDOR NO.
1	147421-01-700	EA	SEAT & COVER ASSEMBLY(WHT)	31703
2	147421-01-701	EA	WATER MODULE ASSEMBLY	31705
3	147421-01-702	EA	NOZZLE ASSEMBLY	31706
4	147421-01-703	EA	LINK - WATER MODULE	31621
7	063740-01-706	EA	BOLT PACKAGE-FLOOR FLANGE	12524 THETFORD
	147421-01-706	EA	SEAL - BLADE	31708
	147421-01-707	EA	CAP (UNIVERSAL BOLT) - WHITE	31713
			CONTACT WINNEBAGO PART SALES FOR UNLISTED COMPONENT(S)	

147421-06-01A

KEY	PART NUMBER	U/M	DESCRIPTION	VENDOR NO.
1	147421-01-700	EA	SEAT & COVER ASSEMBLY(WHT)	31703
2	147421-01-701	EA	WATER MODULE ASSEMBLY	31705
3	147421-01-702	EA	NOZZLE ASSEMBLY	31706
4	147421-01-703	EA	LINK - WATER MODULE	31621
5	147421-01-704	EA	PEDAL - WHITE	31709
6	147421-01-705	EA	FOOT CABLE	31711
7	063740-01-706	EA	BOLT PACKAGE-FLOOR FLANGE	12524 THETFORD
	147421-01-707	EA	CAP (UNIVERSAL BOLT) - WHITE	31713
			CONTACT WINNEBAGO PART SALES FOR UNLISTED COMPONENT(S)	

REV	ZONE	REVISION RECORD	DATE	DFTR-ORIG
RELEASE		REV A DATE	DWG NO 116230	

E-37	164906-01-000	ELBOW-1/2"CTS X 1/2"MPT
E-36	163338-02-000	FLOJET ELBOW-PUMP, 1/2"BARB X PART
E-35	114429-11-000	ELBOW-1/2" P X 1/2" FPT
E-34	133837-01-000	ELBOW-PVC 1 1/2" X 90° DBL SLIP
1 E-33	010009-01-000	ELBOW-ST-PLAS 1/4" BD 1 1/2" X 90°
E-32	111223-04-000	ELBOW 1/2" MPT X 1/2" BARB
E-31	111223-03-000	ELBOW 3/4" MPT X 1/2" BARB
E-30	123150-01-000	ELBOW-SWIVEL 1/2" FPT X 1/2" BARB
E-29	114429-09-000	ELBOW 1/2" P X 1/2" FPT DROPEAR
E-28	111223-02-000	ELBOW 1/2" MPT X 3/8" BARB
E-27	118424-01-000	ELBOW-BRASS 1/4" P X 1/4" P
E-26	065318-02-000	ELBOW-BRASS 90° 3/8" MPT X 3/8" FPT
E-25	114429-06-000	ELBOW-SWIVEL 1/2" P X 3/4" FPT
E-24	114429-05-000	ELBOW 1/2" P X 3/4" MPT
E-23	114429-04-000	ELBOW 1/2" P X 3/8" MPT
E-22	114429-08-000	ELBOW-SWIVEL 1/2" P X 1/2" FPT LONG
E-21	114429-02-000	ELBOW 1/2" P X 1/2" MPT
E-20	114429-01-000	ELBOW 1/2" P X 1/2" P
1 E-19	114429-03-000	ELBOW-SWIVEL 1/2"P X 1/2" FPT
4 E-14	010009-01-000	ELBOW-ST-PLAS 1/4" BD X 1 1/4" X 90°
E-12	035539-01-000	ELBOW-PLAS 3/8" MPT X 3/8" BARB
E-11	010219-01-000	ELBOW-PLAS 1 1/4" MPT X 1 1/4" BARB
E-10	039808-03-000	ELBOW 1/2" MPT X 1/2" MPT
E-9	114429-10-000	ELBOW-SWIVEL 1/2" MPT X 1/2" FPT
E-8	142812-01-000	ELBOW-BRASS 1/2" MPT X 1/2" FPT
CU-1	101814-01-000	COUPLING-FEMALE 1/2" FPT X 1/2" FPT
CI-5	116473-01-000	SEAL-SWIVEL
CI-4	114427-03-000	NUT 1/2"
CI-3	113697-01-000	CAP 3/8"
CI-2	114427-02-000	PLUG 1/2" P
CI-1	114427-01-000	CAP 1/2" P
CH-4	062401-04-000	CLAMP-HOSE .63-1
CH-3	062401-03-000	CLAMP-HOSE .22-1
CH-2	007161-01-000	CLAMP-HOSE,SPRING
CH-1	062401-02-000	CLAMP-HOSE 1 1/2" - 2 1/2"
CA-3	155264-03-XXX	COMPARTMENT ASM-SHOWER, EXT
CA-2	155264-01-XXX	COMPARTMENT ASM-SHOWER, EXT
CA-1	106217-01-XXX	COMPARTMENT ASM-SHOWER, EXT
C-7	132148-01-000	CONNECTOR-BRASS 1/2" X 1/2" MPT
C-6	103798-01-000	CONNECTOR 1/4" OD X 3/8" MPT
AC-2	123317-01-000	ACCUMULATOR LARGE
AC-1	123243-01-000	ACCUMULATOR SMALL
A-24	164907-02-000	ADAPTER-1/2"CTS X 1/2"FPT SW
A-23	164907-01-000	ADAPTER-1/2"CTS X 1/2"MPT
A-22	114430-10-000	ADAPTER-NUT, FLEX TUBING
A-21	114430-09-000	ADAPTER 1/2" P X 1/2" FPT
A-20	114430-04-000	ADAPTER 1/2" P X 3/8" MPT
A-19	136333-01-000	ADAPTER-BRASS 1/2" MPT X 1/2" FPT
A-18	133835-01-000	ADAPTER 1 1/2" P X 1 1/4" MPT
A-17	114430-06-000	ADAPTER-PLAS 1/2" P X 3/8" FPT
A-16	118809-02-000	ADAPTER-PLAS 1/2" MPT X 1/2" BARB
A-15	123152-01-000	ADAPTER-SWIVEL 1/2" FPT X 1/2" BARB
A-14	114430-08-000	ADAPTER 1/2" P X 3/4" MPT
A-13	118809-01-000	ADAPTER 1/2" MPT X 3/8" BARB
A-12	114430-03-000	ADAPTER 1/2" P X 1/2" MPT
A-11	114430-02-000	ADAPTER-SWIVEL 1/2" P X 1/2" FPT
A-10	114430-01-000	ADAPTER 1/2" P X 1/2" P
A-6	112177-01-000	ADAPTER-BRASS 1/2" MPT X 1/2" BARB
A-5	010224-01-000	ADAPTER 3/8" MPT X 3/8" BARB
A-4	044927-01-000	ADAPTER 1 1/4" MPT X 1 1/4" BARB
NO.	P/N	DESCRIPTION

TU-14	133836-03-000	PIPE 1 1/2" PVC SCH 40 120mm
TU-13	074462-01-000	TUBING-VINYL 1 1/4" ID, CLEAR
TU-12	133836-02-000	TUBING 1 1/2" PVC SCH 40 60mm
TU-11	133836-01-000	TUBING 1 1/2" PVC SCH 40
TU-10	124188-02-000	TUBING 1/2" ID PEX (RED)
TU-9	124188-01-000	TUBING 1/2" ID PEX (BLUE)
TU-8	112176-01-000	TUBING-FLEX X 1/2" ID
TU-7	039800-05-000	TUBING 5/8" OD (RED)
TU-6	115029-01-000	TUBING 3/8" ID
TU-5	039800-04-000	TUBING 1/4"
TU-4	079381-01-000	TUBING 1 1/4" ID
TU-3	074462-02-000	TUBING 3/8"
TU-2	039800-02-000	TUBING 5/8"
T-26	160949-02-000	TEE 1/2" CTS X 1/2" CTS X 1/2" CTS
T-25	160949-01-000	TEE (CONNECTOR) 1/2" X 1/2" X 1/4" REDUCE
T-24	118423-01-000	TEE-BRASS 1/4" C X 1/4" C X 1/4" C
T-23	114428-04-000	TEE 1/2" P X 1/2" P X 1/8" FPT
T-22	114428-03-000	TEE 1/2" P X 1/2" P X 1/2" MPT
T-21	114428-02-000	TEE-SWIVEL 1/2"P X 1/2"P X 1/2" FPT
T-20	114428-01-000	TEE 1/2" P X 1/2" P X 1/2" P
T-19	114428-07-000	TEE 1/2" P X 1/2" MPT X 1/2" P
T-18	114428-06-000	TEE 1/2" P X 1/2" MPT X 1/2" MPT
T-17	114428-05-000	TEE-SWIVEL 1/2"FPTX1/2"MPTX1/2"MPT
T-1	039798-01-000	TEE 1/2" MPT X 1/2" MPT X 1/2" MPT
SH-1	131383-01-CHT	SHOWER HEAD-W/HOSE & BRKT
S-1	124184-01-000	SUPPORT-BEND
N-2	135386-02-000	NIPPLE 1/2" X 4"
N-1	135386-01-000	NIPPLE 1/2" MPT X 1/2" MPT
PW-4	163338-01-000	FLOJET PUMP-WATER, 2.9 GPM
PW-3	160702-02-000	PUMP-WATER, 2.8 GPM, 55PSI
PW-2	144215-01-000	PUMP-WATER, 5.7 GPM
1 PW-1	098607-01-000	PUMP-WATER, 2.8 GPM
PL-3	145609-01-000	PLUG-BRASS 1/2" MPT
PL-2	010166-02-000	PLUG 1 1/4" MPT-CSA
PL-1	010166-01-000	PLUG 1 1/4" MPT
I-2	111888-01-000	FERRULE-PLASTIC 1/4" COMP
I-1	111888-02-000	INSERT-BRASS 1/4" COMP
F-13	167984-01-CHT	FILL-CITY WATER, SURF, FPT
F-12	163338-03-000	FLOJET STRAINER-WATER PUMP
F-11	144215-02-000	STRAINER-WATER PUMP
F-10	137169-01-CHT	FILL-WATER,LOCK(138290-03-000 LOCK-CASE)
F-9	152925-01-CHT	FILTER IN-LINE
F-8	131081-03-XXX	DOOR ASM-WATER FILL (KEY ONE)
F-7	163269-02-CHT	FAUCET-SHOWER-SHORT
F-6	010230-XX-000	FILL-CITY WATER, SURF, MPT
F-5	077954-02-000	FILTER/SCREEN-WATER, IN-TANK
F-4	137169-01-CHT	FILL-WATER,GRAVITY (138637-03-000 LOCK)
	137169-02-CHT	WASHER-GRAVITY WATERFILL
F-2	163269-01-CHT	FAUCET-SHOWER-LONG
F-1	103106-01-000	FAUCET-EXTERNAL WATER 90°
E-41	164906-04-000	ELBOW-DROP EAR, 1/2 CTS X FPT
E-40	166212-02-000	ELBOW-HOSE BARB
E-39	164906-03-000	ELBOW-1/2"CTS X 1/2" CTS
E-38	164906-02-000	ELBOW-1/2"CTS X 1/2" FPT SWV
NO.	P/N	DESCRIPTION

W-3	087277-11-000	WASHER-PLASTIC ∅ 16.5mm HOLE
2 W-2	087277-12-000	WASHER-PLASTIC ∅ 26.5mm HOLE
2 W-1	087277-08-000	WASHER-PLASTIC ∅ 22.0mm HOLE
V-16	062421-03-000	VALVE 1 1/2" HUB X HUB
V-15	120868-01-000	VALVE-NEEDLE, COMP 1/4" C X 1/4" C
V-14	114431-05-000	VALVE-NEEDLE, COMP 1/8" MPT X 1/4"
V-13	114431-04-000	VALVE-STOP 1/2" P X 1/2" P
V-12	114431-03-000	VALVE 1/2" P X 1/2" P
V-11	114431-02-000	VALVE 1/2" P, BYPASS
V-10	114431-01-000	VALVE-LINE DRAIN 1/2" P
V-7	167737-01-000	VALVE-CHECK,UNION
V-6	110438-02-000	VALVE-CHECK, BRASS
U-2	166212-01-000	UNION-HOSE BARB,CTS X 1/2"
U-1	133889-01-000	UNION-PVC 1 1/2" DBL SLIP
R-11	140821-10-000	RISER-SUPPLY TUBE ∅ 1/2" X 48" (1219.2)
R-10	140821-09-000	RISER-SUPPLY TUBE ∅ 1/2" X 36" (914.4)
R-9	140821-08-000	RISER-SUPPLY TUBE ∅ 1/2" X 24" (609.6)
R-8	140821-07-000	RISER-SUPPLY TUBE ∅ 3/8" X 72" (1828.8)
R-7	140821-06-000	RISER-SUPPLY TUBE ∅ 3/8" X 60" (1524)
R-6	140821-05-000	RISER-SUPPLY TUBE ∅ 3/8" X 54" (1371.6)
R-5	140821-04-000	RISER-SUPPLY TUBE ∅ 3/8" X 48" (1219.2)
R-4	140821-03-000	RISER-SUPPLY TUBE ∅ 3/8" X 36" (914.4)
R-3	140821-02-000	RISER-SUPPLY TUBE ∅ 3/8" X 30" (762)
R-2	140821-01-000	RISER-SUPPLY TUBE ∅ 3/8" X 24" (609.6)
NO.	P/N	DESCRIPTION

4. PART IS ALSO LISTED ON THE DRAINAGE SYSTEM PART LIST DRAWING 116229.

3. ALL FITTINGS ON THIS DRAWING ARE APPROVED FOR POTABLE WATER. ANY NEW PARTS MUST BE CERTIFIED FOR POTABLE WATER USE.

2. ATTACH WITH TAPE-DOUBLE 123816-03-000.

1. INACTIVE.

NOTES:

WINNEBAGO INDUSTRIES

COPYRIGHT 2009
WINNEBAGO
INDUSTRIES, INC.

DFTR | ORIG. DATE
CHKR | ALL DIMENSIONS ARE IN MILLIMETERS
P.E.
M.E. | FIRST USED
DSNR | 95-98 MH'S

UNSPECIFIED TOLERANCES ARE:
WHOLE DIM (X) : 7
ONE-PLACE (X.X) :
TWO-PLACE (X.XX) :
ANGLE :
THIRD ANGLE PROJECTION
MATERIAL:

DO NOT SCALE DRAWING

TITLE: PART LISTING-WATER SYSTEM

SHEET 1 OF 1 | PART NO. 116230 | REV

REF:

RELEASE	REV A	DATE	DWG NO 173242

REV	ZONE	REVISION RECORD	DATE	DFTR-ORIG

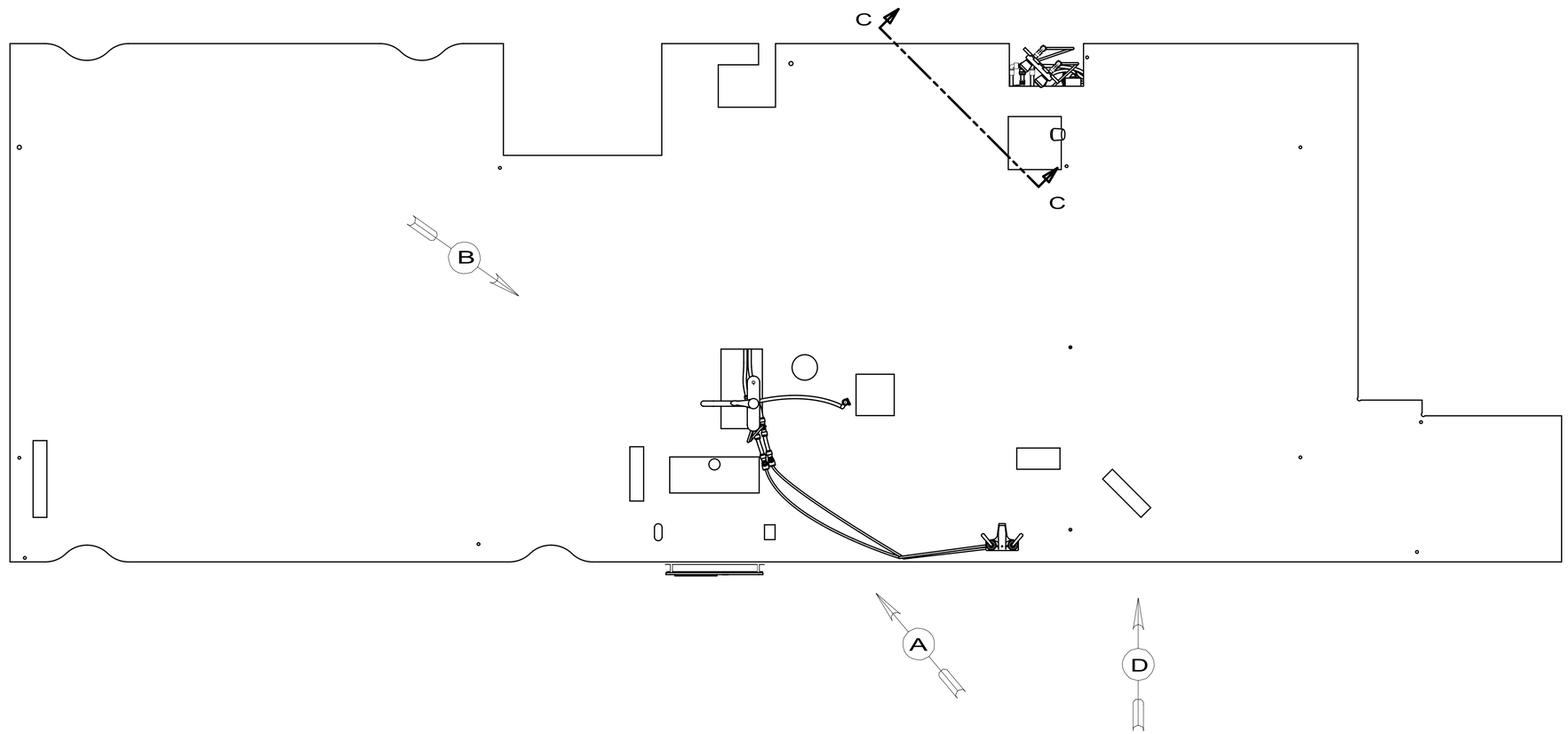

1J4 EXT WASH STATION - WITHOUT
64R EXTERIOR WASH STATION
53F WATER HEATER-ELEC. IGNITION
53D WTR HTR-6GAL/ELE/LP/MOTORAID

11 CHECK VALVE IS INSTALLED TO PREVENT WATER FROM LEAVING WATER HEATER.

10 CHECK VALVE IS INSTALLED TO PREVENT WATER FROM ENTERING WATER HEATER.

9 ADD PIPE WRAP (LADDER SCRAP) INSULATION HERE.

8 LABEL HOT AND COLD SUPPLY TUBES.

7 TAPE FITTING TO TUBE BEFORE CABINET SET TO PREVENT FITTING FROM MOVING.

6 ADD TEFLON TAPE 10405-01-000.

5 ADD TEFLON TAPE 10405-02-000.

4 FLUSHING SYSTEM REQUIRES 125697-06-000 INSTRUCTION SHEET.

3. ALL TUBING TO BE SECURED AT 1200 INTERVALS MAXIMUM WITH CLAMP 10495-01-000 AND SCREW G67-10-12B OR EQUIVALENT.

2. TUBING TO BE INSTALLED WITH SUFFICIENT SLOPE TO PROVIDE DRAINAGE TO NEAREST VALVE.

1. PLASTIC FITTINGS TO BE SEALED WITH SEALANT 84456-01-000.

NOTES:

X-X FOR WATER CALLOUTS SEE DWG NO 116230-01-000

WINNEBAGO INDUSTRIES

COPYRIGHT 2010 WINNEBAGO INDUSTRIES, INC.

DFTR	ORIG. DATE
CHKR	ALL DIMENSIONS ARE IN MILLIMETERS
P.E.	
M.E.	FIRST USED
DSNR	10 E30W

UNSPECIFIED TOLERANCES ARE:
WHOLE DIM (X) : 3
ONE-PLACE (X.X) : 1.5
TWO-PLACE (X.XX) : 0.50
ANGLE : 1°

MATERIAL:

THIRD ANGLE PROJECTION

DO NOT SCALE DRAWING

REFER TO ES0018 FOR FASTENER TIGHTENING GUIDELINES

TITLE: WATER SYSTEM INSTL

SHEET 1 OF 4 | PART NO 173242 | REV

REF:

3/17/2010

DWG NO 173242

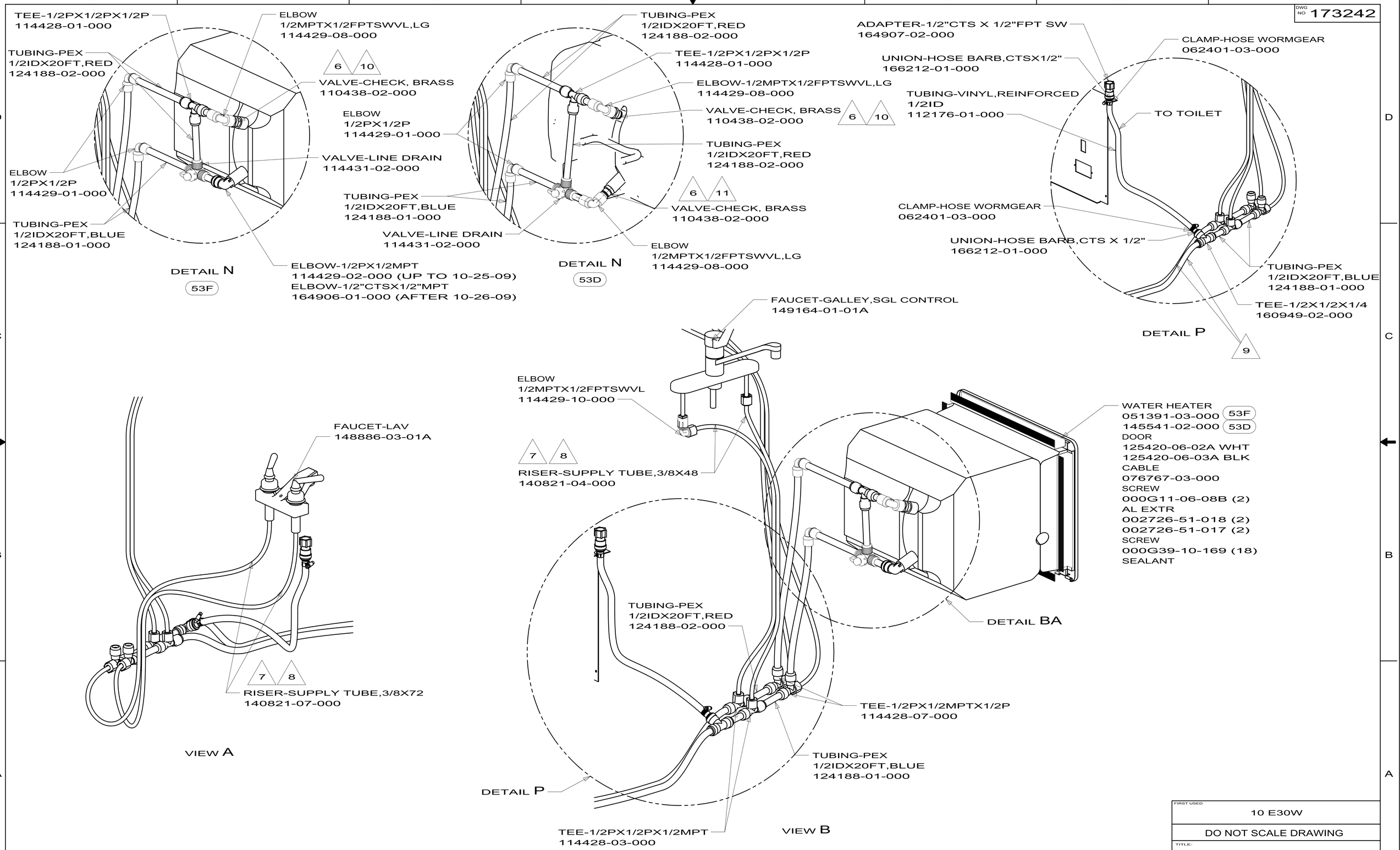

FIRST USED	10 E30W
	DO NOT SCALE DRAWING
TITLE:	WATER SYSTEM INSTL
SHEET 2	PART NO 173242 REV

3/17/2010

DWG NO 173242

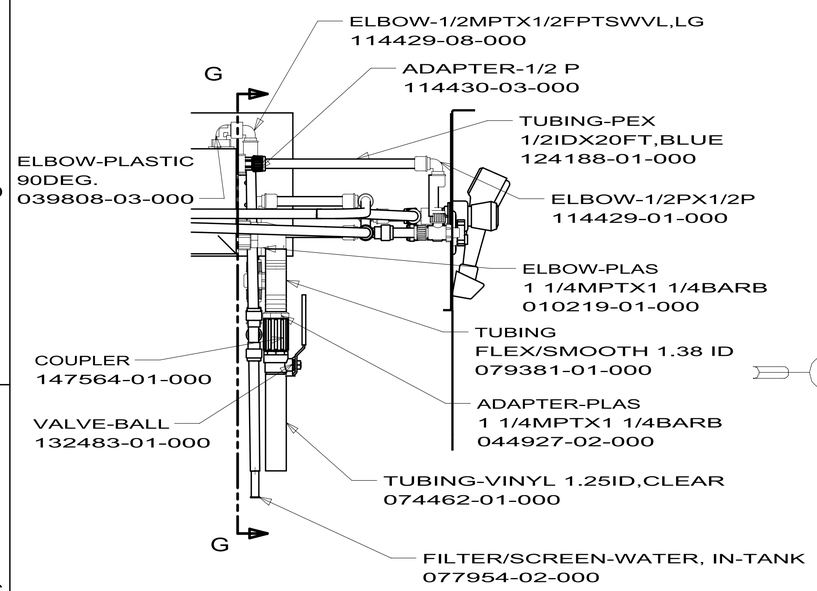

VIEW F

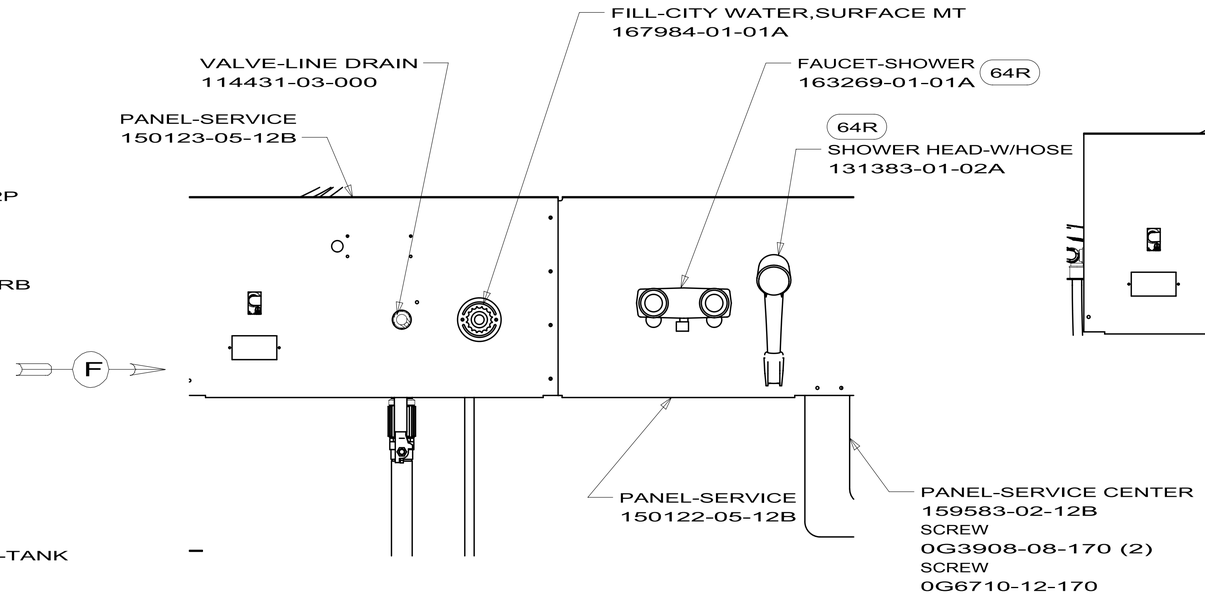

VIEW D

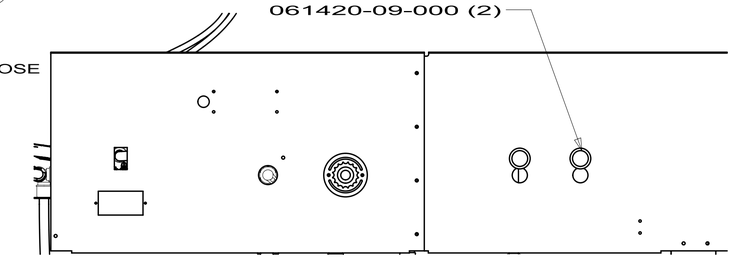

VIEW D

1J4

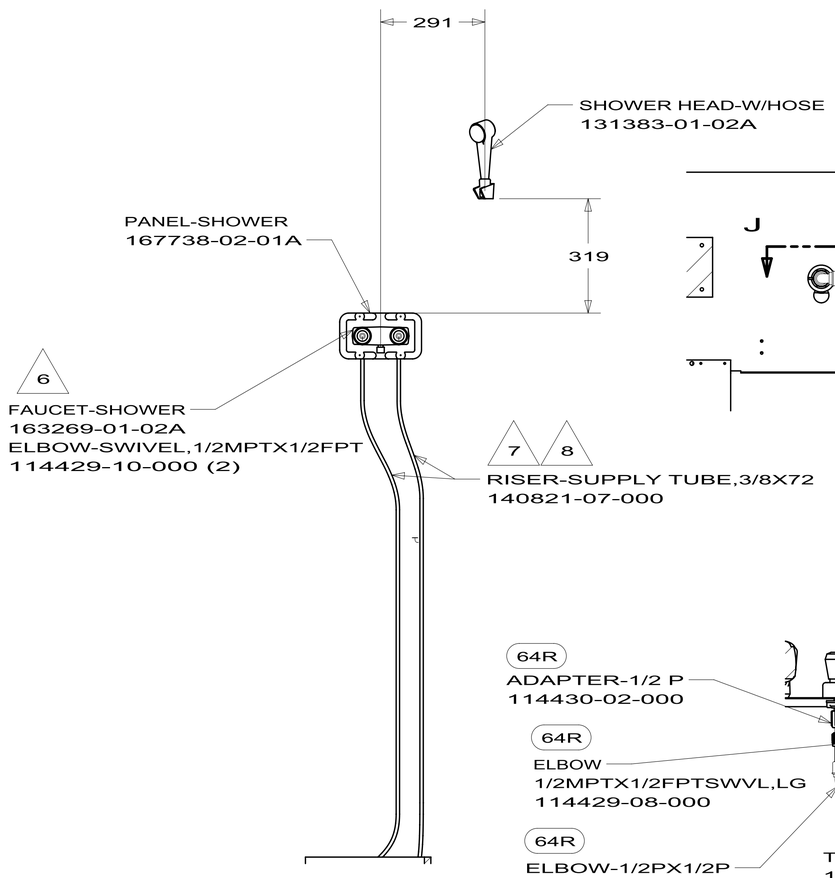

SECTION C-C

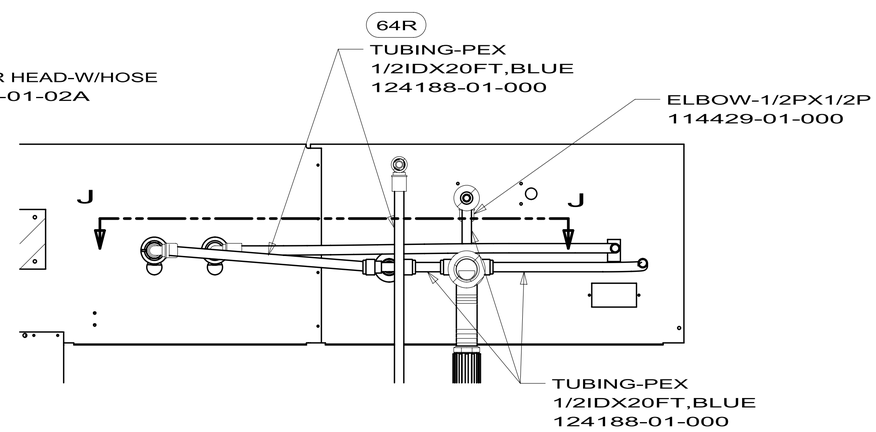

SECTION G-G

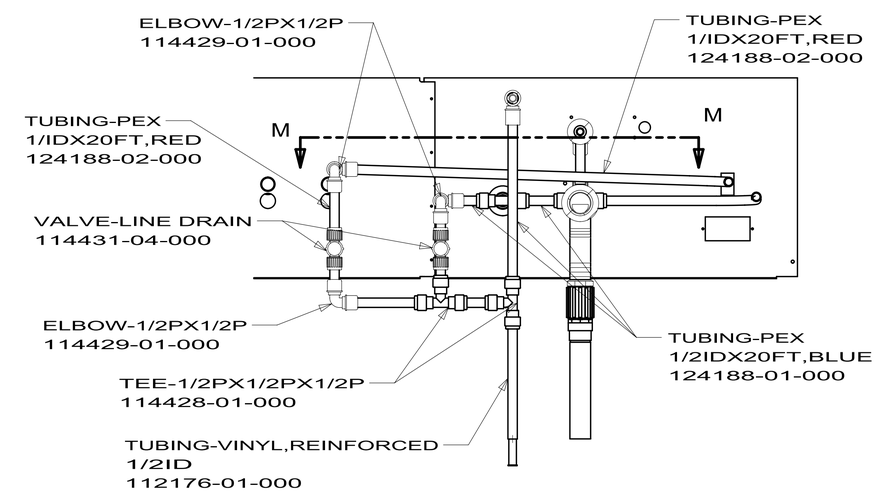

SECTION G-G

1J4

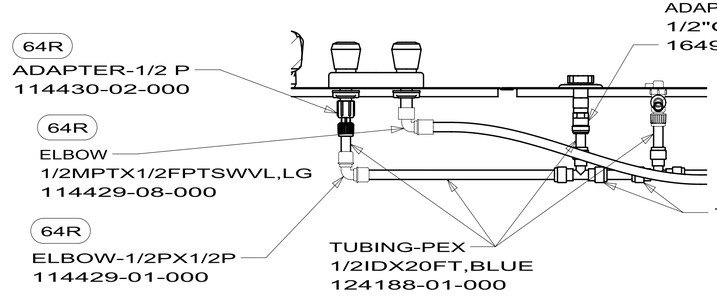

SECTION J-J

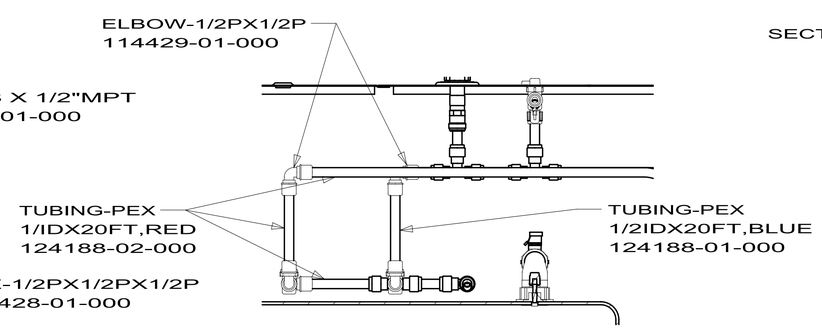

SECTION M-M

1J4

FIRST USED	10 E30W
DO NOT SCALE DRAWING	
TITLE:	WATER SYSTEM INSTL
SHEET 3	PART NO 173242 REV

3/17/2010

DWG NO 173242

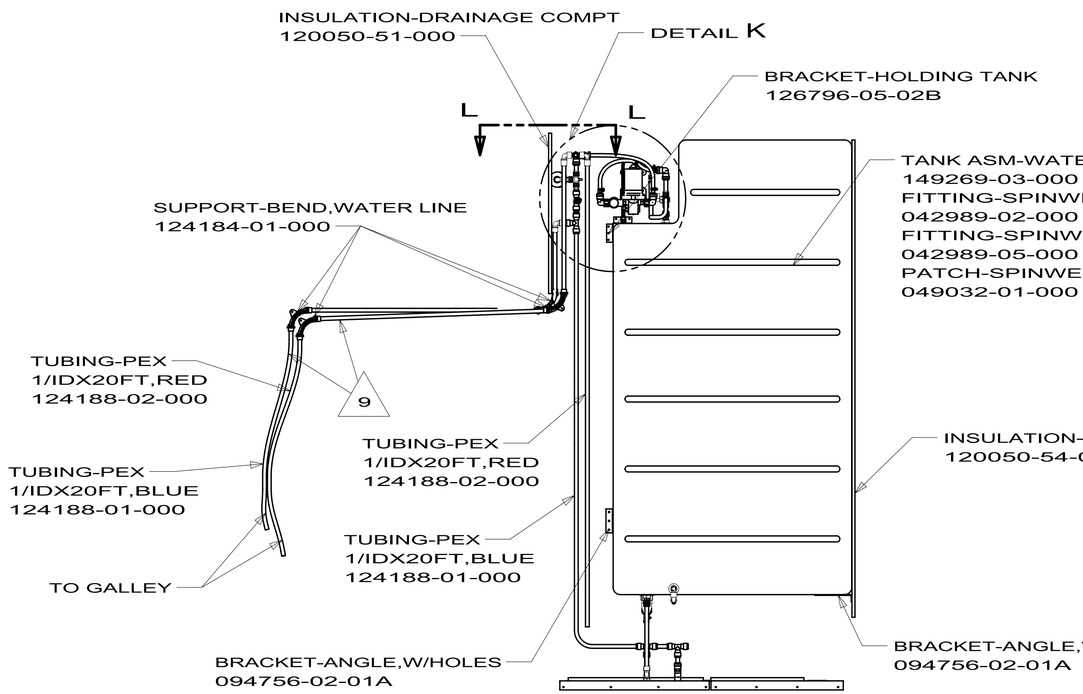

ONLY SHOWING LINES UNDER FLOOR

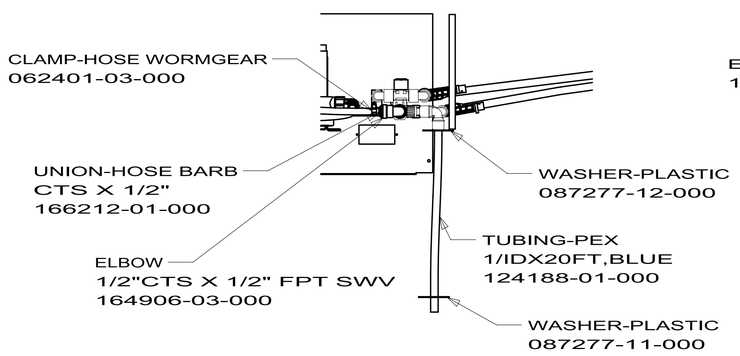

SECTION L-L
(ROTATED)

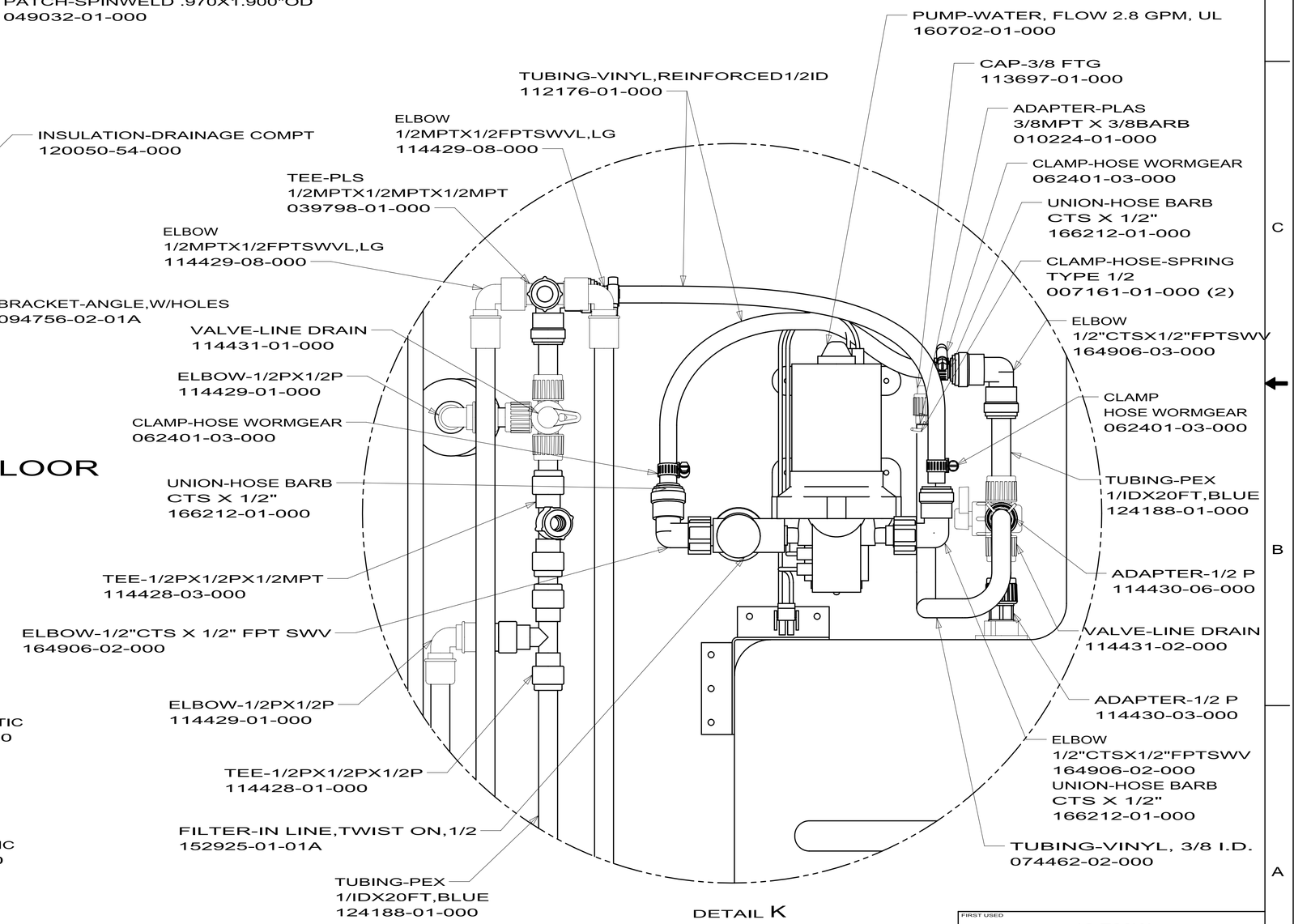

DETAIL K

FIRST USED	10 E30W
	DO NOT SCALE DRAWING
TITLE:	WATER SYSTEM INSTL
SHEET 4	PART NO 173242 REV

3/17/2010

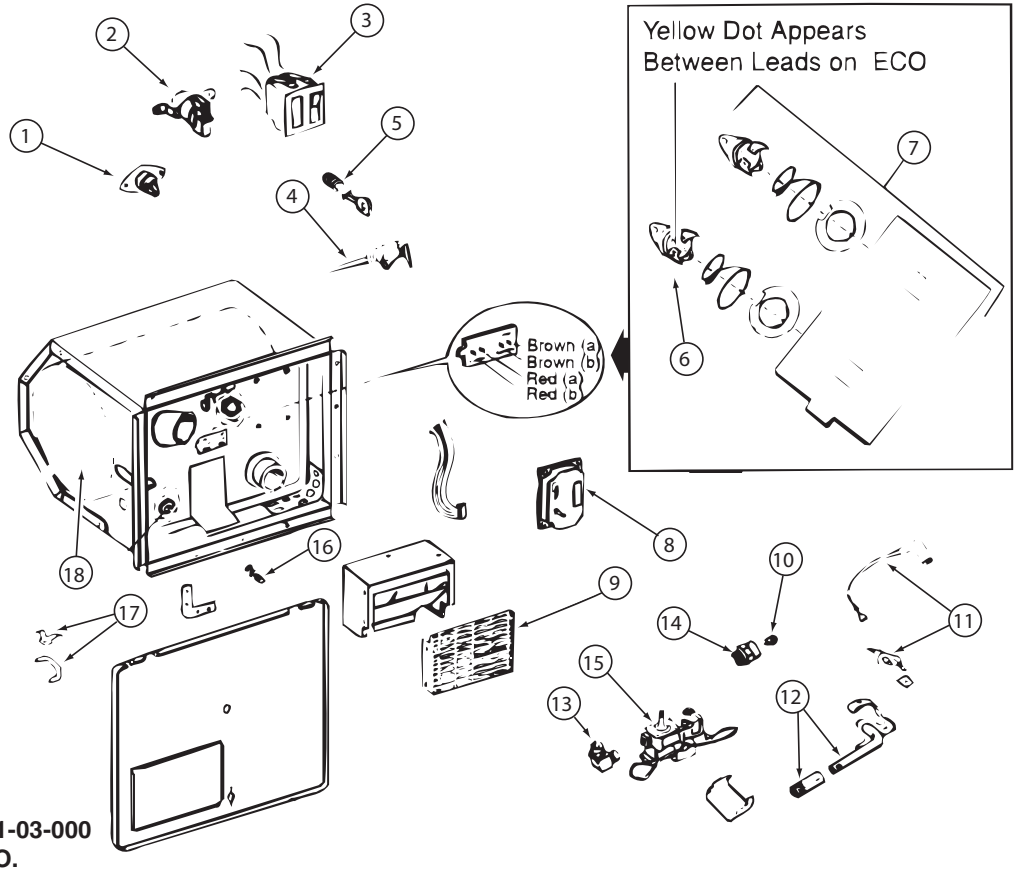

051391-03-000

KEY	PART NUMBER	U/M	DESCRIPTION	VENDOR NO.
3	051393-01-701	EA	SWITCH - REMOTE - W/LIGHT	91959
4	051391-01-704	EA	VALVE-RELIEF, 1/2" FITTING	91604
4	051391-03-701	EA	VALVE-RELIEF - 3/4" FITTING	90028
5	051391-01-705	EA	FASTENER-CAMLOCK	92609
6	051391-04-701	EA	THERMOSTAT 12V DC-120 PRESET	91470
7	051393-01-721	EA	THERMOSTAT W/ECO, 140 FRT MT	91447
9	051391-04-707	EA	KIT-EXHAUST, (FLUE & GASKET)	90960
10	051391-01-710	EA	ORIFICE-MAIN BURNER	92742
12	051391-04-703	EA	BURNER-MAIN/ELECTRONIC IG	91638
13	051391-01-714	EA	FITTING-ELBOW 45,3/8F X 3/8	MPT 1044
14	051391-03-700	EA	HOLDER-ORIFICE	91563
16	051391-01-715	EA	PLUG-DRAIN, 1 EA = 2 PER PKG	91857
17	051391-01-700	EA	HINGE KIT, (PIN & CLIP)	92568&92559
18	051391-04-706	EA	TANK-G6A-4E/6E/7E/8E-FRT.MT	91641 - INNER
	051391-01-717	EA	GRILLE-WATER HEATER DOOR	92640
	051393-01-723	EA	SWITCH - THERMAL CUTOUT 2/PK	93866 WAS 93853
	051393-01-724	EA	BOARD-CIRCUIT,SPADE TERMINAL	93865
	051393-01-725	EA	ELECTRODE-SGL SPADE CONNECT.	93868
	051393-01-726	EA	VALVE/SOLENOID - W/O BRACKET	93870
	111129-01-711	EA	BRACKET-CORNER, SET OF FOUR	91928

CONTACT WINNEBAGO PARTS SALES FOR UNLISTED COMPONENT(S)

COPYRIGHT © 2009 WINNEBAGO INDUSTRIES INC.

125420-01-03A, 125420-03-03A, 125420-04-03A, 125420-05-03A, 125420-06-02A/03A/04A,

KEY	PART NUMBER	U/M	DESCRIPTION	VENDOR NO.
	051391-01-705	EA	FASTENER - CAMLOCK	92609

COPYRIGHT © 2009 WINNEBAGO INDUSTRIES INC.

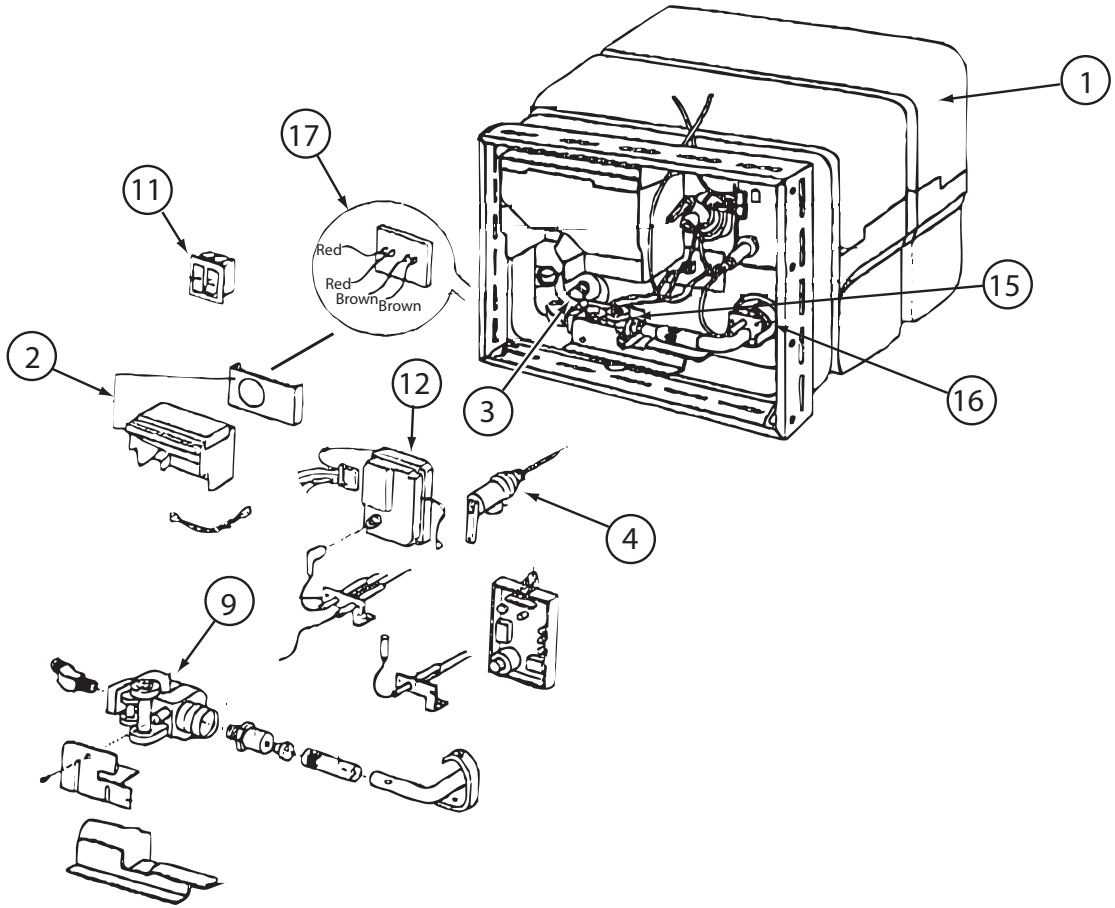

145541-01-000

KEY	PART NUMBER	U/M	DESCRIPTION	VENDOR NO.
1	145541-01-700	EA	TANK - W/INSULATION - 10 GAL	91028
2	051391-04-707	EA	KIT-EXHAUST, (FLUE & GASKET)	90960
3	051391-01-715	EA	PLUG-DRAIN, 1 EA = 2 PER PKG	91857
4	051391-01-704	EA	VALVE-RELIEF, 1/2" FITTING	91604
9	051393-01-726	EA	VALVE/SOLENOID - W/O BRACKET	93870
11	145541-01-701	EA	SWITCH - ON/OFF - WHITE	91859
12	145541-01-702	EA	CIRCUIT BOARD	91226
15	145541-01-703	EA	SWITCH - THERMAL CUT OFF	93866
16	051393-01-725	EA	ELECTRODE-SGL SPADE CONNECT.	93868
17	051393-01-721	EA	THERMOSTAT W/ECO, 140 FRT MT	91447
	051391-05-706	EA	ELEMENT-HEATING 1500 WATT	92249 W/GASKET
	051393-01-701	EA	SWITCH - REMOTE - W/LIGHT	91959
	145541-01-704	EA	RELAY	90061
	145541-01-705	EA	JUNCTION BOX(PLASTIC) 10 GAL	91224
			CONTACT WINNEBAGO PARTS SALES FOR UNLISTED COMPONENT(S)	

COPYRIGHT © 2009 WINNEBAGO INDUSTRIES INC.

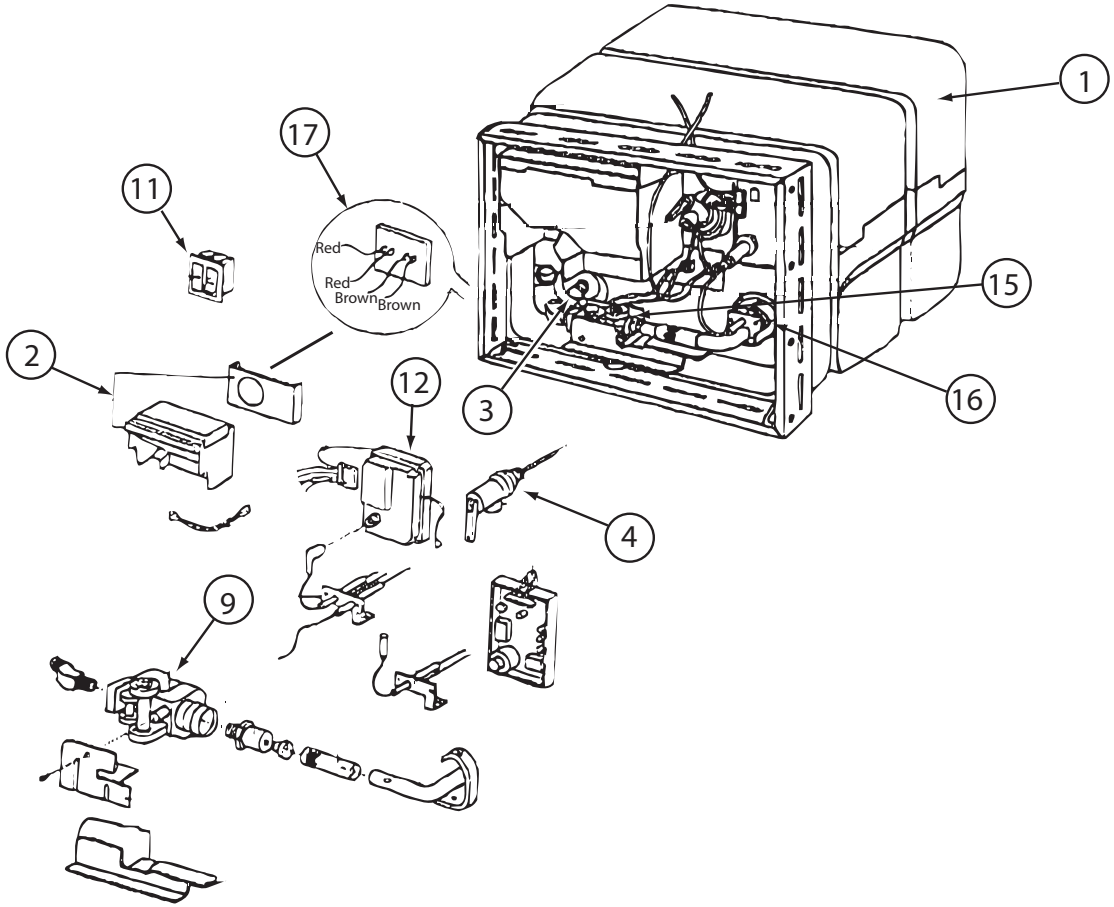

145541-02-000

KEY	PART NUMBER	U/M	DESCRIPTION	VENDOR NO.
1	145541-02-700	EA	TANK/SERVICE KIT PCS- 6 GAL	91053
2	051391-04-707	EA	KIT-EXHAUST, (FLUE & GASKET)	90960
3	051391-01-715	EA	PLUG-DRAIN, 1 EA = 2 PER PKG	91857
4	051391-01-704	EA	VALVE-RELIEF, 1/2" FITTING	91604
4	051391-03-701	EA	VALVE-RELIEF - 3/4" FITTING	90028
9	051393-01-726	EA	VALVE-SOLENOID - W/O BRACKET	93870
11	051393-01-701	EA	SWITCH - REMOTE - W/LIGHT	91959
11	145541-01-701	EA	SWITCH - ON/OFF - WHITE	91859
12	145541-01-702	EA	CIRCUIT BOARD	91226
15	145541-01-703	EA	SWITCH - THERMAL CUT OFF	93866
16	051393-01-725	EA	ELECTRODE-SGL SPADE CONNECT.	93868
17	051393-01-721	EA	THERMOSTAT W/ECO, 140 FRT MT	91447
	051391-05-706	EA	ELEMENT-HEATING 1500 WATT	92249 W/GASKET
	145541-01-704	EA	RELAY	90061
	145541-02-701	EA	JUNCTION BOX(PLASTIC) 6 GAL	91222
			CONTACT WINNEBAGO PARTS SALES FOR UNLISTED COMPONENT(S)	

COPYRIGHT © 2009 WINNEBAGO INDUSTRIES INC.

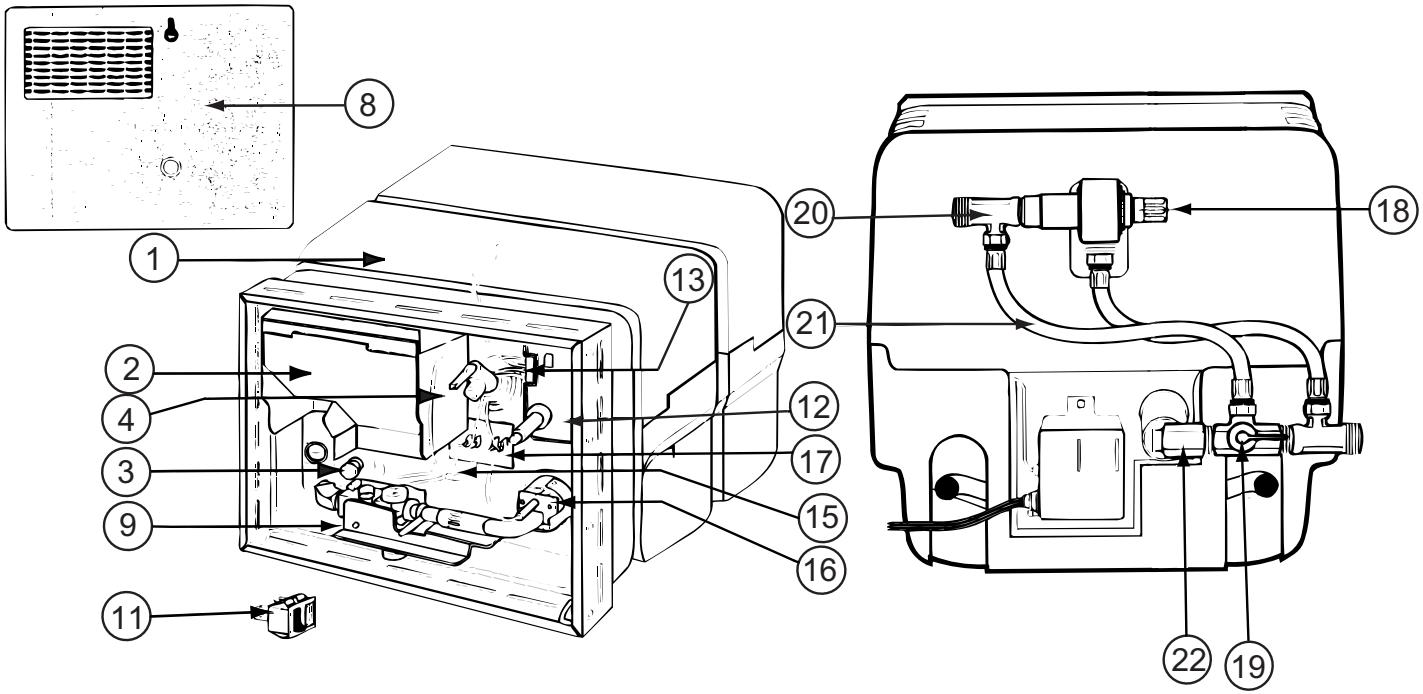

145541-03-000

KEY	PART NUMBER	U/M	DESCRIPTION	VENDOR NO.
1	145541-03-706	EA	TANK - INNER	91229
2	051391-04-707	EA	KIT-EXHAUST, (FLUE & GASKET)	90960
3	051391-01-715	EA	PLUG-DRAIN, 1 EA = 2 PER PKG	91857
4	051391-01-704	EA	VALVE-RELIEF, 1/2" FITTING	91604
9	051393-01-726	EA	VALVE/SOLENOID - W/O BRACKET	93870
11	051393-01-701	EA	SWITCH - REMOTE - W/LIGHT	91959
11	145541-01-701	EA	SWITCH - ON/OFF - WHITE	91859
12	145541-01-702	EA	CIRCUIT BOARD	91226
15	051393-01-723	EA	SWITCH - THERMAL CUTOUT 2/PK	93866 WAS 93853
16	051393-01-725	EA	ELECTRODE-SGL SPADE CONNECT	93868
17	145541-03-700	EA	THERMOSTAT	90063
18	145541-03-701	EA	MIXING VALVE	91569
19	145541-03-702	EA	BYPASS VALVE	91568
20	145541-03-703	EA	TEE	91556
21	145541-03-704	EA	HOSE F/MIXING VALVE	91576
22	145541-03-705	EA	ELBOW	91567
	145541-01-704	EA	RELAY	90061
	145541-01-705	EA	JUNCTION BOX(PLASTIC) 10 GAL	91224
	051391-05-706	EA	ELEMENT-HEATING 1500 WATT	92249 W/GASKET
			CONTACT WINNEBAGO PARTS SALES FOR UNLISTED COMPONENT(S)	

COPYRIGHT © 2009 WINNEBAGO INDUSTRIES INC.

148886-01-01A, 148886-02-02A

KEY	PART NUMBER	U/M	DESCRIPTION	VENDOR NO.
	075240-05-700	EA	CARTRIDGE - WASHERLESS	9-P42

148886-03-01A

KEY	PART NUMBER	U/M	DESCRIPTION	VENDOR NO.
	140117-02-700	EA	CARTRIDGE	9-40-5-ORLH(PAIR)
	140117-03-700	EA	HANDLE-LEVER (BLUE)	T44-9C-1C
	140117-03-701	EA	HANDLE-LEVER-(RED)	T44-9C-1H

COPYRIGHT © 2009 WINNEBAGO INDUSTRIES INC.

149164-01-01A

KEY	PART NUMBER	U/M	DESCRIPTION	VENDOR NO.
	149164-01-700	EA	HANDLE	MO-146781
	149164-01-701	EA	CARTRIDGE	MO-1255
	149164-01-702	EA	NUT-CARTRIDGE	MO-144266
	149164-01-703	EA	SPOUT ASM	MO-146786
	149164-01-704	EA	SPRAY HEAD & HOSE ASM	MO-136103

COPYRIGHT © 2010 WINNEBAGO INDUSTRIES INC.