RELEASE	REV A	DATE	DWG NO 171771

REV	ZONE	REVISION RECORD	DATE	DFTR-ORIG

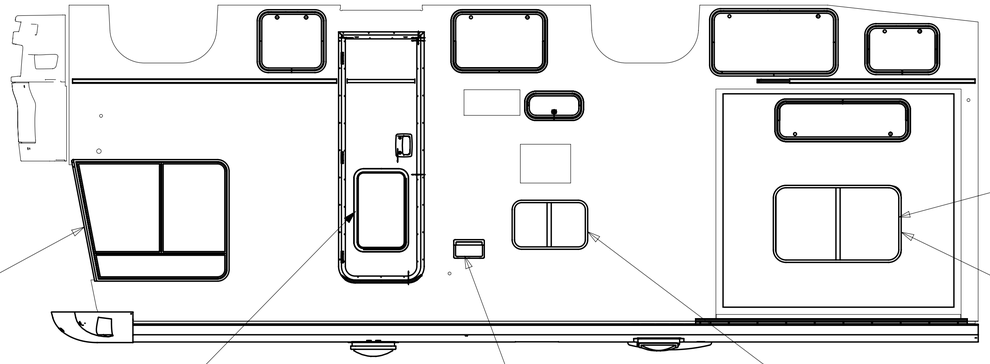

WINDOW ASM-SE-GI
173181-04-01A
SCREW
159585-01-01A
000G11-08-08B (29)
COVER-WEEP HOLE
174959-01-01A (4)

2

WINDOW ASM
117053-02-F36
GLASS PICTURE
002181-25-000
EXTR-VINYL, SEAL
087561-01-000
WINDOW ASM-SE-GI
13Y 173183-01-01A
FRAME
117054-02-03A
SCREW
000G11-10-08B (13)

VENT ASM-RANGE
147821-01-01A WHT
147821-01-02A BLK
VENT ASM-RANGE,COVER
147821-02-01A WHT
SCREW
000G11-08-12B(8)

WINDOW ASM-SE-GI
173186-01-01A
173185-07-01A 13Y
SCREW
000G11-10-10B (16)

1

WINDOW ASM-SE-GI
173186-13-01A
173185-31-01A 13Y
SCREW
000G11-08-08B (23)

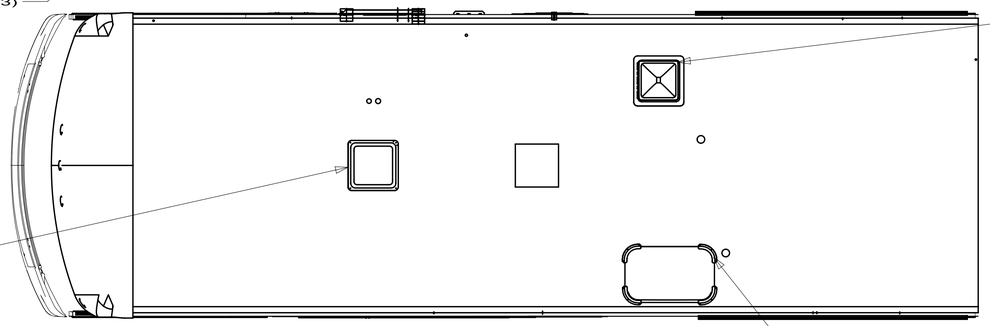

311
VENT-ROOF,NON-POWERED
122882-01-01A
GARNISH
122882-07-01A
GEAR-ARM-ROOF VENT
009440-01-000
SCREW
110460-04-02A

41M
VENTILATOR-ROOF
123780-26-01A
SCREW
155618-01-01A(4)

VENT ASM-ROOF,POWERED
122882-02-01A 1B1
122882-03-01A 265
GARNISH
122882-07-01A
FAN-PLAS-6 IN 6 BLADED
048649-01-000
GEAR-ARM-ROOF VENT
009440-01-000
MOTOR-12V NONVENTED 1/8 SFT
048648-01-000
SCREW
110460-04-02A (4)

SKYLIGHT INSTL
080524-11-000

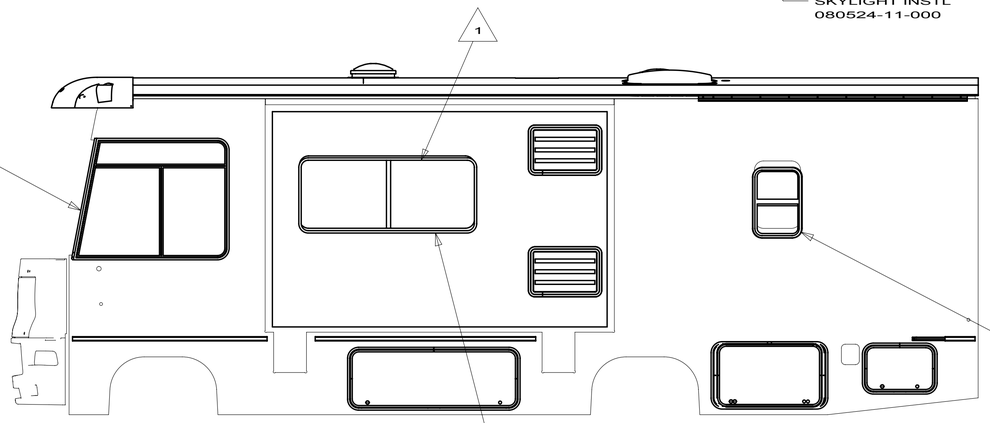

1

WINDOW ASM-SE-GI
173181-05-01A
SCREW
000G11-08-08B (29)
SCREW
159585-01-01A (3)
COVER-WEEP HOLE
174959-02-01A (4)

2

WINDOW ASM-SE-GI
173188-01-01A
173187-08-01A 13Y
SCREW
000G11-08-08B (15)

WINDOW ASM-SE-GI
173186-09-01A
13Y 173185-01-01A
SCREW
000G11-08-08B (28)

094	WINDOWS - SE-GI
13Y	WINDOWS-COACH-DUAL PANE
41M	VENT-POWER VENTILATOR
645	RENTAL - MOTURIS
65G	WINDOWS-COACH-SINGLE PANE
311	VENT-NON-POWERED
265	CODES/STANDARDS-CSA/CMVSS
1B1	CODES/STANDARDS USA

2. INSTALL SCREWS IN LOWER FRONT CORNER NEXT TO DASH.

1. ESCAPE WINDOW

NOTES:

SEE CHART

FOR COLOR VARIATIONS OF THIS PART

WINNEBAGO INDUSTRIES

COPYRIGHT 2010
WINNEBAGO
INDUSTRIES, INC.

DFTR	ORIG. DATE
CHKR	ALL DIMENSIONS ARE IN MILLIMETERS
P.E.	
M.E.	FIRST USED
DSNR	10 E26P

UNSPECIFIED TOLERANCES ARE:
WHOLE DIM (X) :
ONE-PLACE (X.X) :
TWO-PLACE (X.XX) :
ANGLE :

MATERIAL:

THIRD ANGLE PROJECTION

DO NOT SCALE DRAWING

REFER TO ES0018 FOR FASTENER TIGHTENING GUIDELINES

TITLE:
BODY INSTL-WINDOWS & VENTS

SHEET 1 OF 1 | PART NO 171771 | REV

REF: 1

3/3/2010

RELEASE	REV A	DATE	DWG NO 080524
REV	ZONE	REVISION RECORD	DATE	DFTR-ORIG

SKYLITE INSTL
080524-11 E26P
080524-12 (UP TO 12-15-09 329B,331C)
080524-14 524A,524DL,H25T
080524-15 224V,229T,231C,231J
080524-16 E32K
080524-19 D33C,D35J,R40CD
080524-20 524K,524P,728B,J32H,(AFTER 12-16-09 329B,331C)

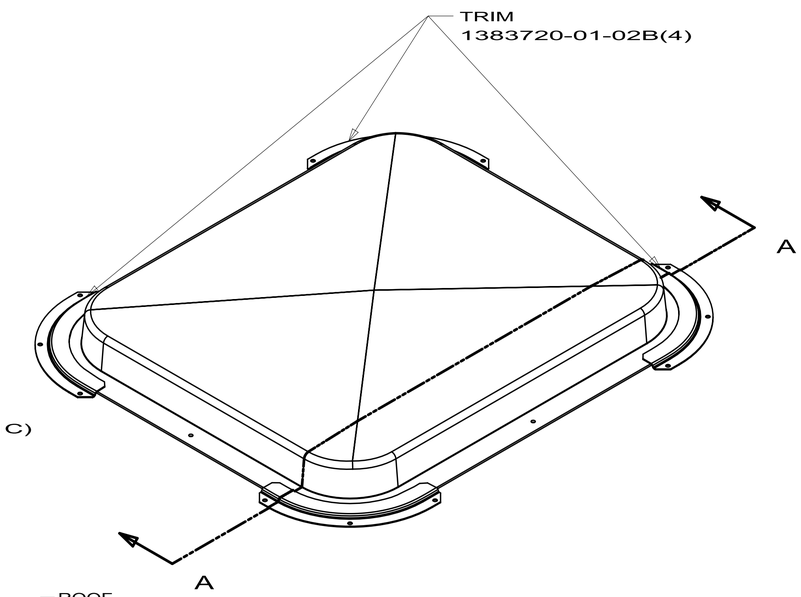

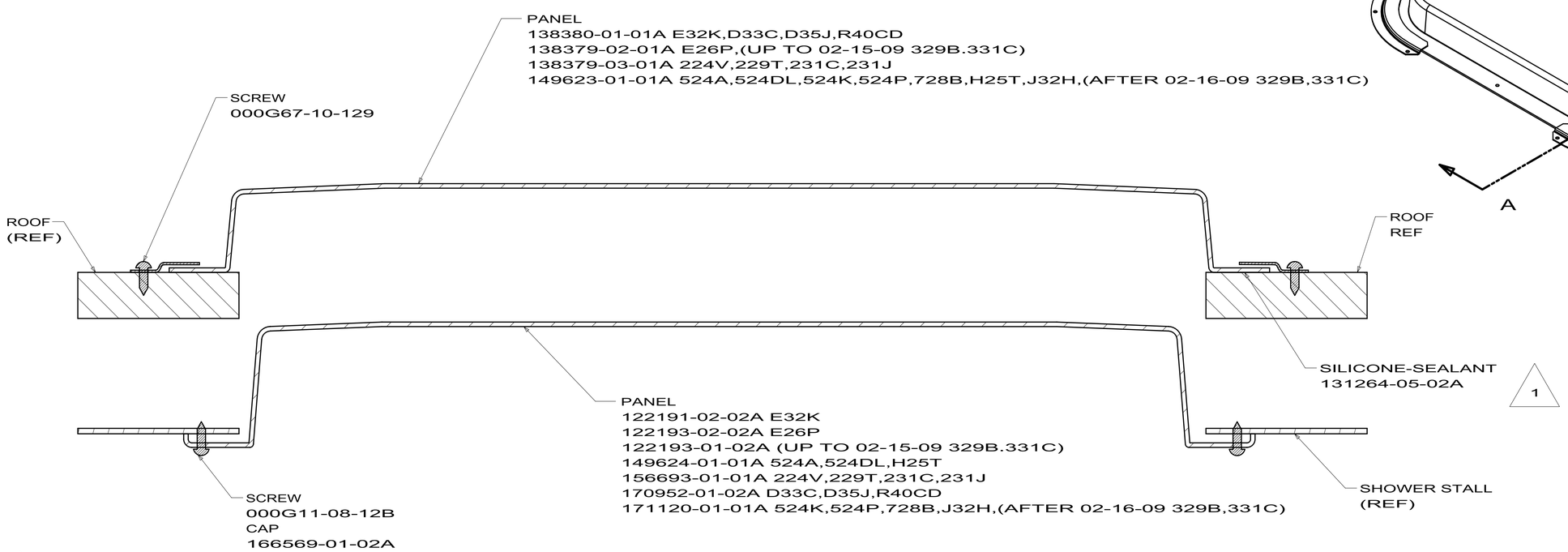

1. SEALANT APPLIED ALL AROUND CENTER OF FLANGE OR GROOVE.

NOTES:

SECTION A-A

COPYRIGHT 2009
WINNEBAGO
INDUSTRIES, INC.

DFTR	ORIG. DATE
CHKR	ALL DIMENSIONS ARE IN MILLIMETERS
P.E.	
M.E.	FIRST USED
DSNR	85 A&C BODY
UNSPECIFIED TOLERANCES ARE: WHOLE DIM (X) : ONE-PLACE (X.X) : TWO-PLACE (X.XX) : ANGLE :	MATERIAL:
THIRD ANGLE PROJECTION	

DO NOT SCALE DRAWING

TITLE: SKYLITE INSTL

SHEET 1 OF 2 | PART NO 080524 | REV

REF: 1

12/8/2009

122882-01-01A

KEY	PART NUMBER	U/M	DESCRIPTION	VENDOR NO.
	064470-01-700	EA	COVER - VENT	J7291
	064470-01-701	EA	SLIDE BAR - VENT LID	JRP1291B
	122882-01-700	EA	HANDLE - CRANK - BLACK	90128
	122882-01-701	EA	SCREEN	JRP-1124-B
	122882-01-702	EA	HANDLE - CRANK - WHITE	JRP1031B
	122882-01-703	EA	SEAL - DOME - 48"	JRP2111B

122882-02-01A, 122882-03-01A

KEY	PART NUMBER	U/M	DESCRIPTION	VENDOR NO.
	064470-01-700	EA	COVER - VENT	J7291
	064470-01-701	EA	SLIDE BAR - VENT LID	JRP1291B
	110051-03-700	EA	SWITCH-BLACK/PUSH BUTTON	27-0164
	122882-01-700	EA	HANDLE - CRANK - BLACK	90128
	122882-01-701	EA	SCREEN	JRP-1124-B
	122882-01-702	EA	HANDLE - CRANK - WHITE	JRP1031B

122882-04-01A

KEY	PART NUMBER	U/M	DESCRIPTION	VENDOR NO.
	064469-03-708	EA	GEAR-DRIVE	RP-1024-.50 PC SIZE
	064470-01-700	EA	COVER - VENT	J7291
	064470-01-701	EA	SLIDE BAR - VENT LID	JRP1291B
	110051-07-701	EA	MOTOR-LIFT, W/BRKT-GEAR 3/16	JRP1099B
	122882-04-700	EA	SCREEN	J29-670-01A

122882-05-01A

KEY	PART NUMBER	U/M	DESCRIPTION	VENDOR NO.
	064469-03-708	EA	GEAR-DRIVE	RP-1024-.50 PC SIZE
	064469-03-709	EA	GEAR-PINION F/LIFT MOTOR	RP-1025 - DIME SIZE
	064470-01-700	EA	COVER - VENT	J7291
	064470-01-701	EA	SLIDE BAR - VENT LID	JRP1291B
	110051-07-701	EA	MOTOR-LIFT, W/BRKT-GEAR 3/16	JRP1099B
	122882-04-700	EA	SCREEN	J29-670-01A

COPYRIGHT © 2009 WINNEBAGO INDUSTRIES INC.

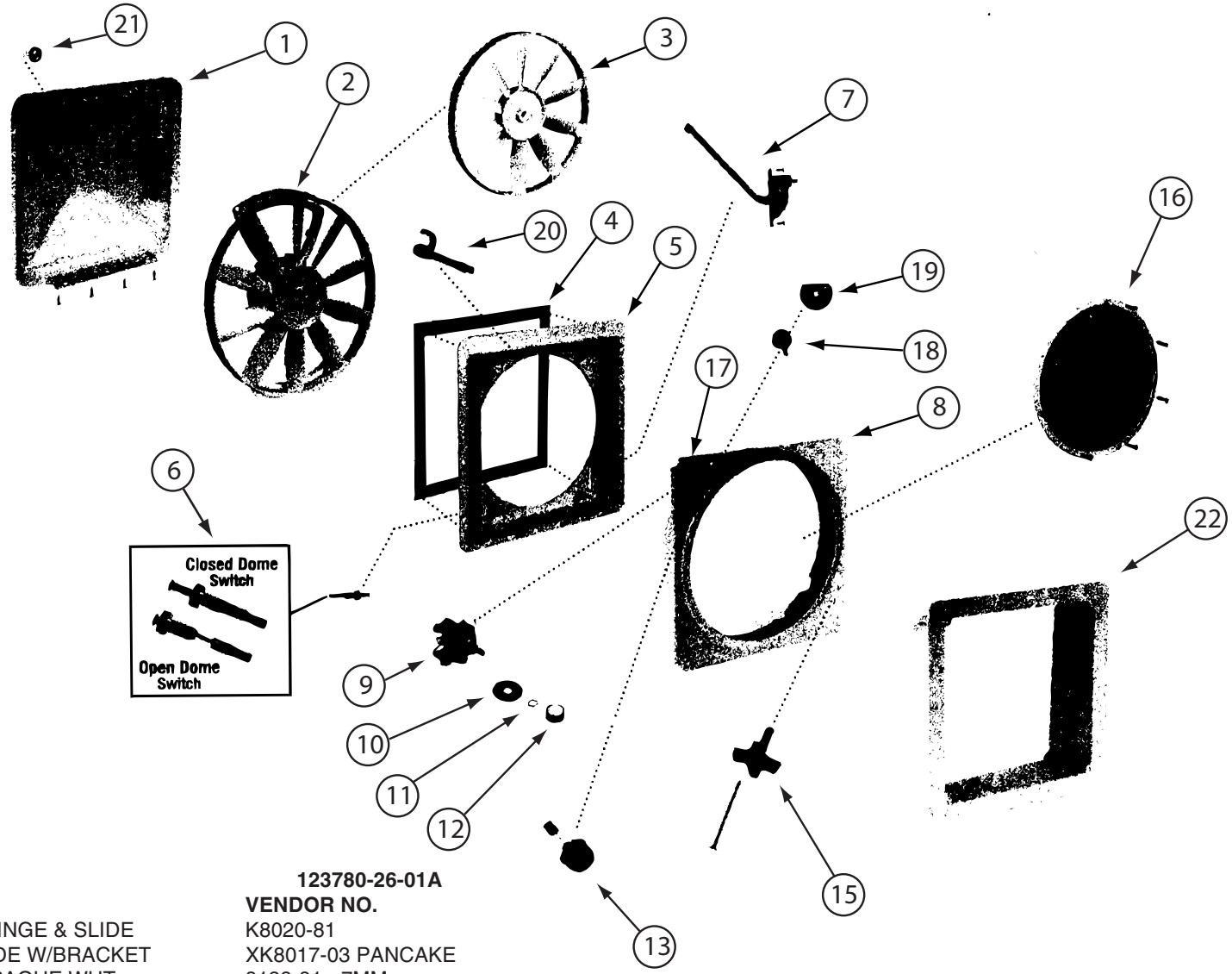

123780-26-01A

KEY	PART NUMBER	U/M	DESCRIPTION	VENDOR NO.
1	123780-22-700	EA	COVER - VENT W/HINGE & SLIDE	K8020-81
2	123780-26-700	EA	MOTOR & FAN BLADE W/BRACKET	XK8017-03 PANCAKE
3	123780-26-701	EA	BLADE/FAN - 12" OPAQUE WHT	8138-81 - 7MM
4	123780-22-701	EA	SEAL/RUBBER-4 1/2' W/GLUE	K1144-09
5	123780-22-702	EA	BASE/MAIN - W/LOCK/SEAL/ARM	XK8010-81 CLAMP STY
6	084079-01-707	EA	SWITCH - SAFETY	1122-05
7	084079-01-702	EA	ARM LIFT ASSEMBLY, MANUAL	101105
9	084079-01-709	EA	SWITCH - MAIN - 3 SPEED	1031-05
13	123780-21-700	EA	FUSE HOLDER W/4AMP FUSE/KNOB	K9018-09 NEW STYLE
15	123780-16-700	EA	KNOB-BLK/AUTOMATIC LIFT MTR	K1140-09
16	123780-21-703	EA	SCREEN - POP N LOCK	2035-81
17	123780-22-704	EA	TRAVEL LOCK ASSEMBLY	4021-09
22	123780-22-705	EA	GARNISH-3 1/2"CLAMP STY-WHT	XK2040-81

CONTACT WINNEBAGO PART SALES FOR UNLISTED COMPONENT(S)

COPYRIGHT © 2009 WINNEBAGO INDUSTRIES INC.

RELEASE	REV A	DATE	DWG NO 170990
REV	ZONE	REVISION RECORD	DATE	DFTR-ORIG

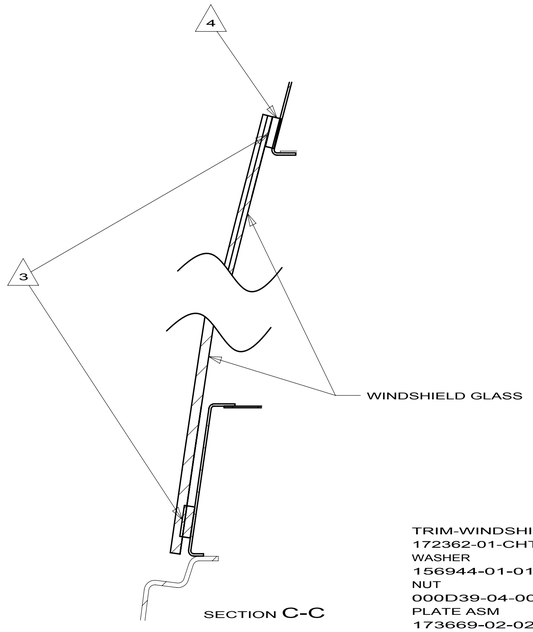

SECTION C-C

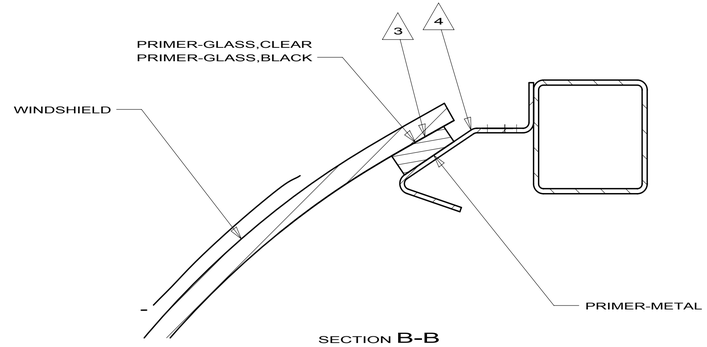

SECTION B-B

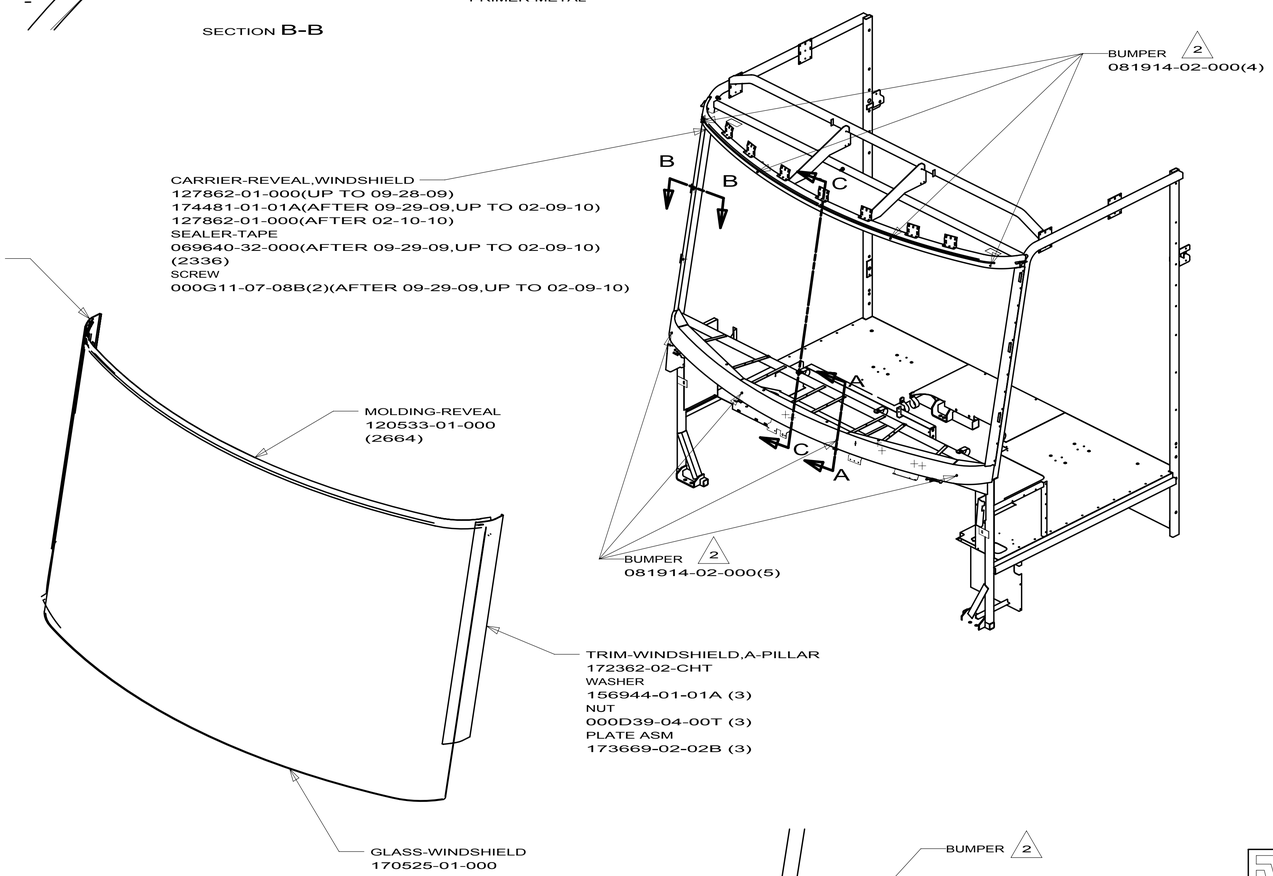

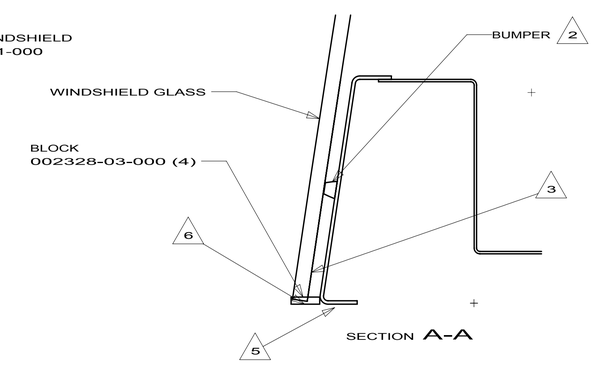

SECTION A-A

6 COAT WITH 168297-02-CHT.

5 COAT WITH SEALER 143201-01-000.

4 BACKFILL WITH 168297-02-CHT.

3 URETHANE ADHESIVE-SEALANT 143813-01-000 IS APPLIED AROUND THE PERIMETER OF THE GLASS.

2 PLACEMENT BETWEEN STEEL AND GLASS APPROXIMATE LOCATION.

1 TOLERANCE TO BE ±2.0 OVERALL WITH A MAXIMUM 2.0 VARIATION IN ANY 300.0 LENGTH. MISALIGNMENT BETWEEN ADJACENT ENDS NOT TO EXCEED 1.5.

TOLERANCE:

1. CAPTURE ENDS OF TOP AND BOTTOM MOLDINGS UNDER A-PILLAR TRIM.

NOTE: ONLY SOLVENT EQUIVALENT TO GM #9981224 MAY BE USED TO PREVENT HARDENING OF PRIMER APPLICATION BRUSH BRISTLES. ONLY SOLVENT EQUIVALENT TO GM #9981412 MAY BE USED FOR ON-LINE CLEAN UP AND MAINTENANCE OF URETHANE EQUIPMENT. CAUTION: USE OF UNAUTHORIZED SOLVENTS AND CLEANING MAY INTERFERE WITH PROPER CURE OF URETHANE ADHESIVE.

NOTE: FOR INSTALLATION AND SEALING SEE SEALANTS MANUAL

INSTALLATION:

1. APPLY CLEAR PRIMER P/N 143816-01 IN A .90 INCH WIDE BAND ON THE INSIDE OF THE GLASS AROUND THE ENTIRE PERIPHERY WITH A CLEAN LINT FREE CLOTH. NOTE: ROTATE CLOTH FREQUENTLY TO CLEAN MOIST SECTION OF CLOTH. WIPE OFF EXCESS PRIMER WITH A CLEAN DRY CLOTH ROTATING CLOTH FREQUENTLY TO A CLEAN SIDE. ALLOW A 10 MINUTE MINIMUM, 2 HOUR MAXIMUM SET TIME. USAGE 11.0 ML.

NOTE: GLASS SHOULD BE FREE OF EXCESS DUST BEFORE APPLYING CLEAR PRIMER.

WINDSHIELD GLASS PREPARATION

NOTE: STEEL AREA TO WHICH PRIMER IS APPLIED MUST NOT EXCEED 100° F OR AMBIENT TEMPERATURE (WHICHEVER IS GREATER) AT THE TIME OF PRIMER APPLICATION.

1. APPLY CLEAR PRIMER P/N 143816-01 IN A .90 WIDE BAND TO THE STEEL AREA OF THE OPENING WITH A CLEAN LINT FREE CLOTH. NOTE: ROTATE CLOTH FREQUENTLY TO A CLEAN MOIST SECTION OF CLOTH. WIPE OFF EXCESS PRIMER WITH A CLEAN DRY CLOTH ROTATING CLOTH FREQUENTLY. ALLOW A 10 MINUTE MINIMUM, 2 HOUR MAXIMUM SET TIME. USAGE 11.0 ML.

NOTE: STEEL SHOULD BE FREE OF EXCESS DUST BEFORE APPLING CLEAR PRIMER.

VEHICLE STEEL FLANGE PREPARATION.

WINDSHIELD INSTALLATION PROCEDURE-URETHANE BONDED SYSTEM

NOTES:

WINNEBAGO INDUSTRIES

COPYRIGHT 2010
WINNEBAGO
INDUSTRIES, INC.

DFTR	ORIG. DATE
CHKR	ALL DIMENSIONS ARE IN MILLIMETERS
P.E.	
M.E.	FIRST USED
DSNR	10 E-SERIES

UNSPECIFIED TOLERANCES ARE:
WHOLE DIM (X) :
ONE-PLACE (X.X) :
TWO-PLACE (X.XX) :
ANGLE :
1

MATERIAL:

THIRD ANGLE PROJECTION

DO NOT SCALE DRAWING

TITLE: WINDSHIELD INSTL

SHEET 1 OF 1 | PART NO 170990 | REV

REF: 1

2/16/2010

RELEASE	REV A	DATE	DWG NO 160711
REV	ZONE	REVISION RECORD	DATE	DFTR-ORIG

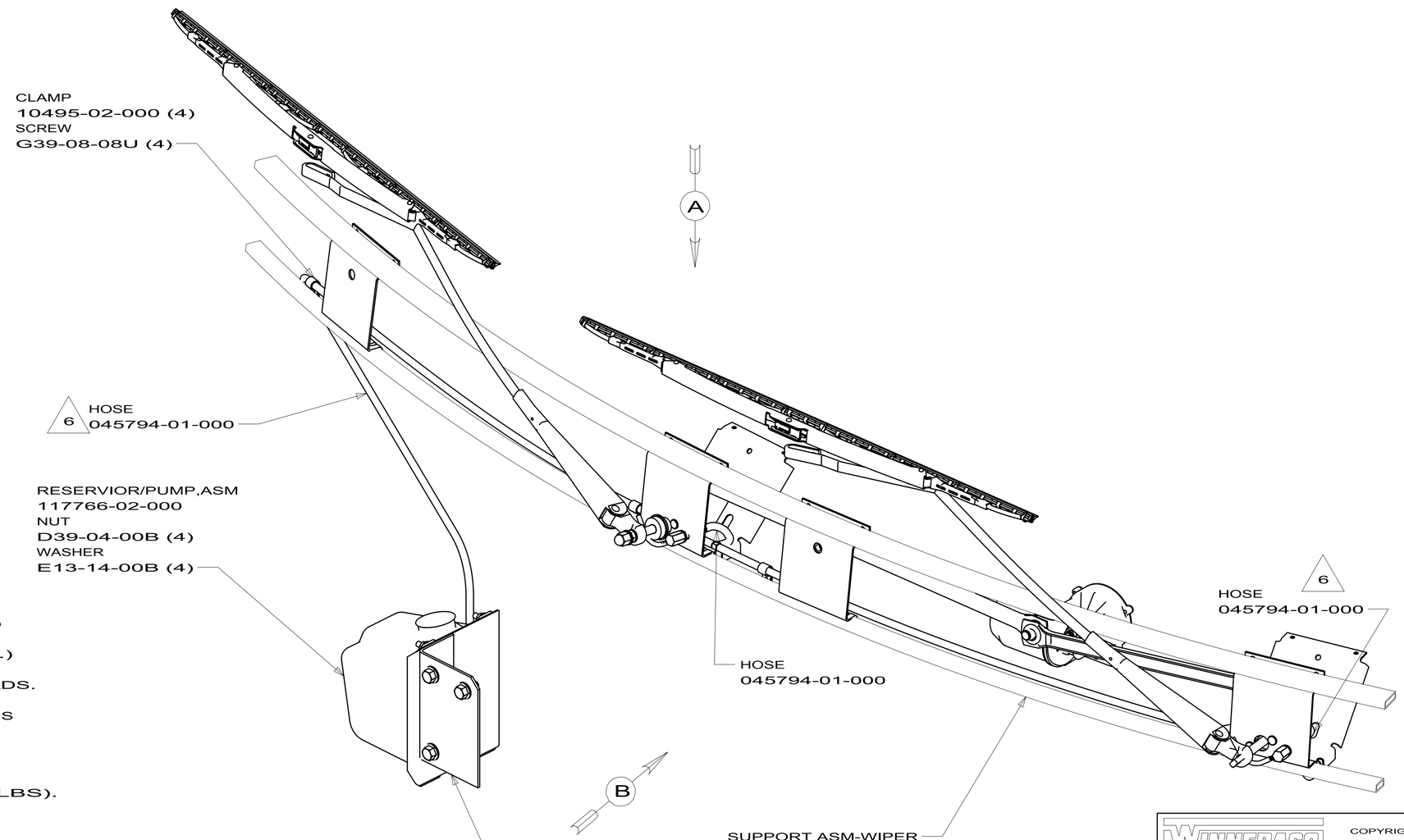

14. TORQUE TO 3NM ±0.3NM (27 IN/LBS ±2.7 IN/LBS.)

13. TORQUE TO 25NM ±2.5NM (220 IN/LBS ±20 IN/LBS.)

12. APPLY LOCTITE NO. 243 (62917-06-000) TO THREADS.

11. WIPER MOTOR NOT TO BE OPERATED UNLESS THE ARMS AND BLADES ARE INSTALLED.

10. SUPPLIED WITH SHAFT-ADAPTER.

9. TORQUE TO 14 NM ± 1.4 NM (124 IN LBS ± 12 IN LBS). RETORQUE AFTER A MIN. OF 30 MINUTE WAIT.

8. TORQUE TO 17.0 NM (150 IN LBS).

7. DRIVERS SIDE LINK MUST BE MOUNTED TO WIPER STUD CRANK BEFORE MOUNTING TO MOTOR CRANK ARM IN ORDER SHOWN.

6. ROUTE WASHER LINES ALONG FRONT EDGE OF LOWER WINDSHIELD SUPPORT AND SECURE WITH PLASTIC TIE 8343-01-000 (2).

5. APPLY LOCTITE NO 242 (70915-02-000) TO THREADS AND HAND TIGHTEN NUT ONLY.

4. APPLY LUBRICANT TO SURFACE OF ALL BALL JOINTS (4) PRIOR TO ASSEMBLY OF LINKAGE.

3. SUPPLIED WITH PIVOT SHAFT ASM.

2. PARK BLADES HORIZONTAL TO TOP OF COWL ASSEMBLY.

1. FILL WASHER BOTTLE WITH FLUID 79969-01 AND CHECK SYSTEM OPERATION.

NOTES:

SEE CHART
FOR COLOR VARIATIONS OF THIS PART

COPYRIGHT 2009
WINNEBAGO
INDUSTRIES, INC.

DFTR	ORIG. DATE
CHKR	ALL DIMENSIONS ARE IN MILLIMETERS
P.E.	
M.E.	FIRST USED
DSNR	08 G-SERIES

UNSPECIFIED TOLERANCES ARE:
WHOLE DIM (X) : 3
ONE-PLACE (X.X) : 1.5
TWO-PLACE (X.XX) : 0.50
ANGLE : 1°

MATERIAL:

THIRD ANGLE PROJECTION

DO NOT SCALE DRAWING

TITLE: WIPER-WASHER INSTL

SHEET 1 OF 2 | PART NO 160711 | REV

REF:

10/21/2009

DWG NO 160711

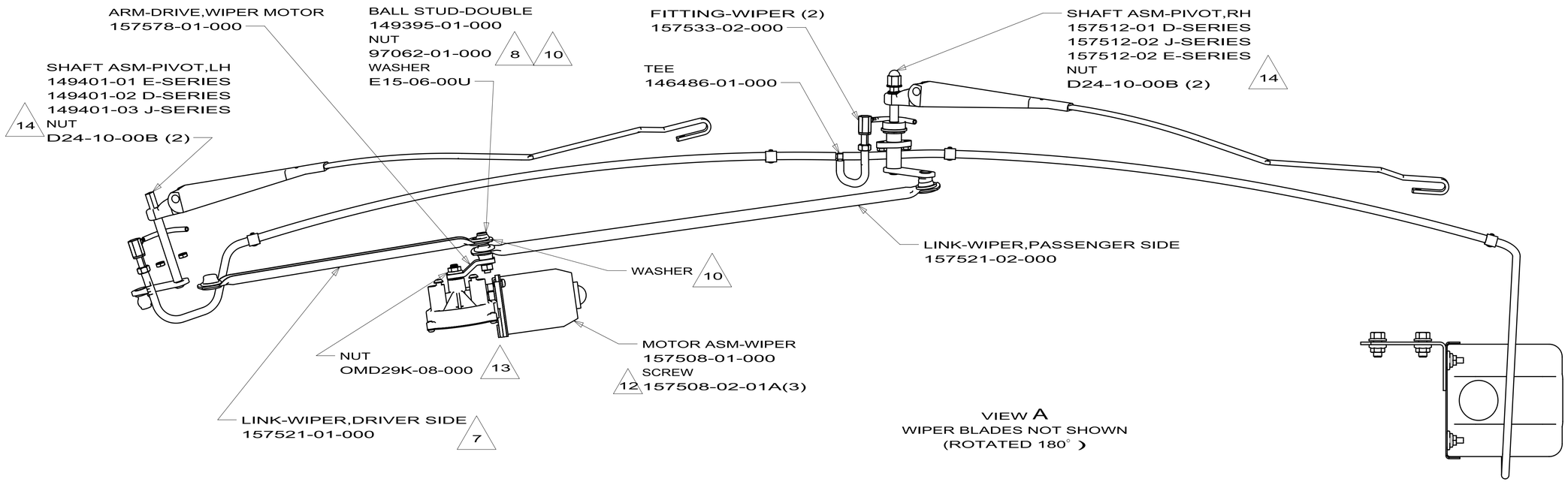

VIEW A
WIPER BLADES NOT SHOWN
(ROTATED 180°)

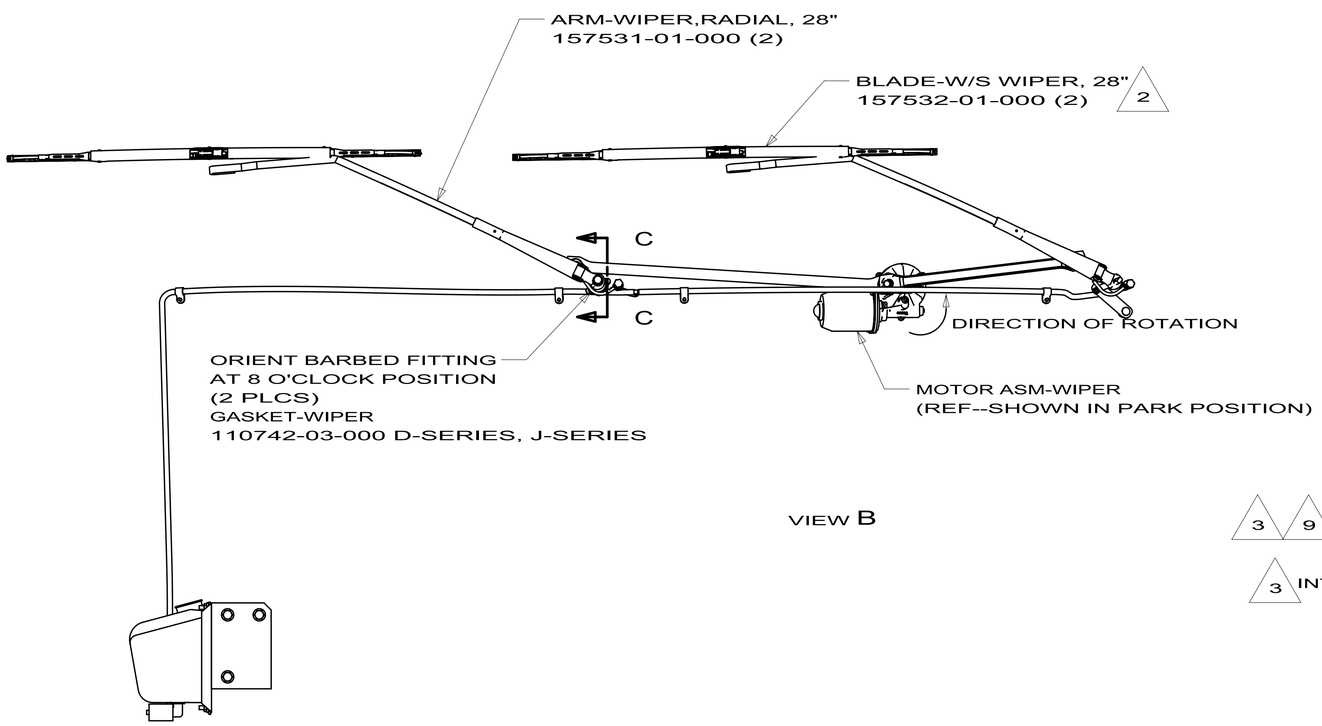

VIEW B

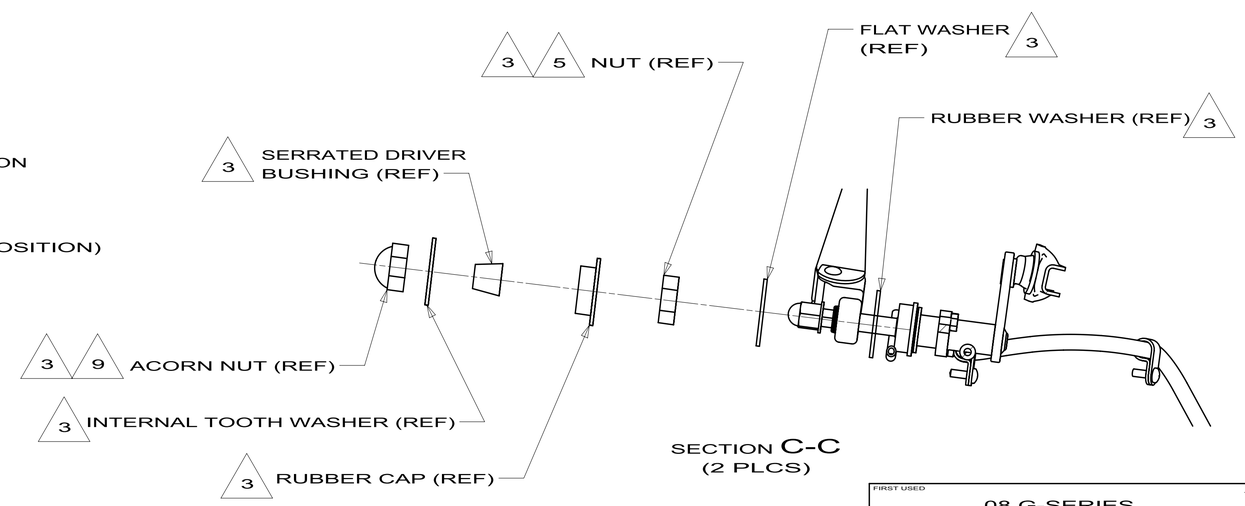

SECTION C-C
(2 PLCS)

FIRST USED	08 G-SERIES
	DO NOT SCALE DRAWING
TITLE:	WIPER-WASHER INSTL
SHEET 2	PART NO 160711 REV

10/21/2009

RELEASE	REV A	DATE	DWG NO 174979

REV	ZONE	REVISION RECORD	DATE	DFTR-ORIG

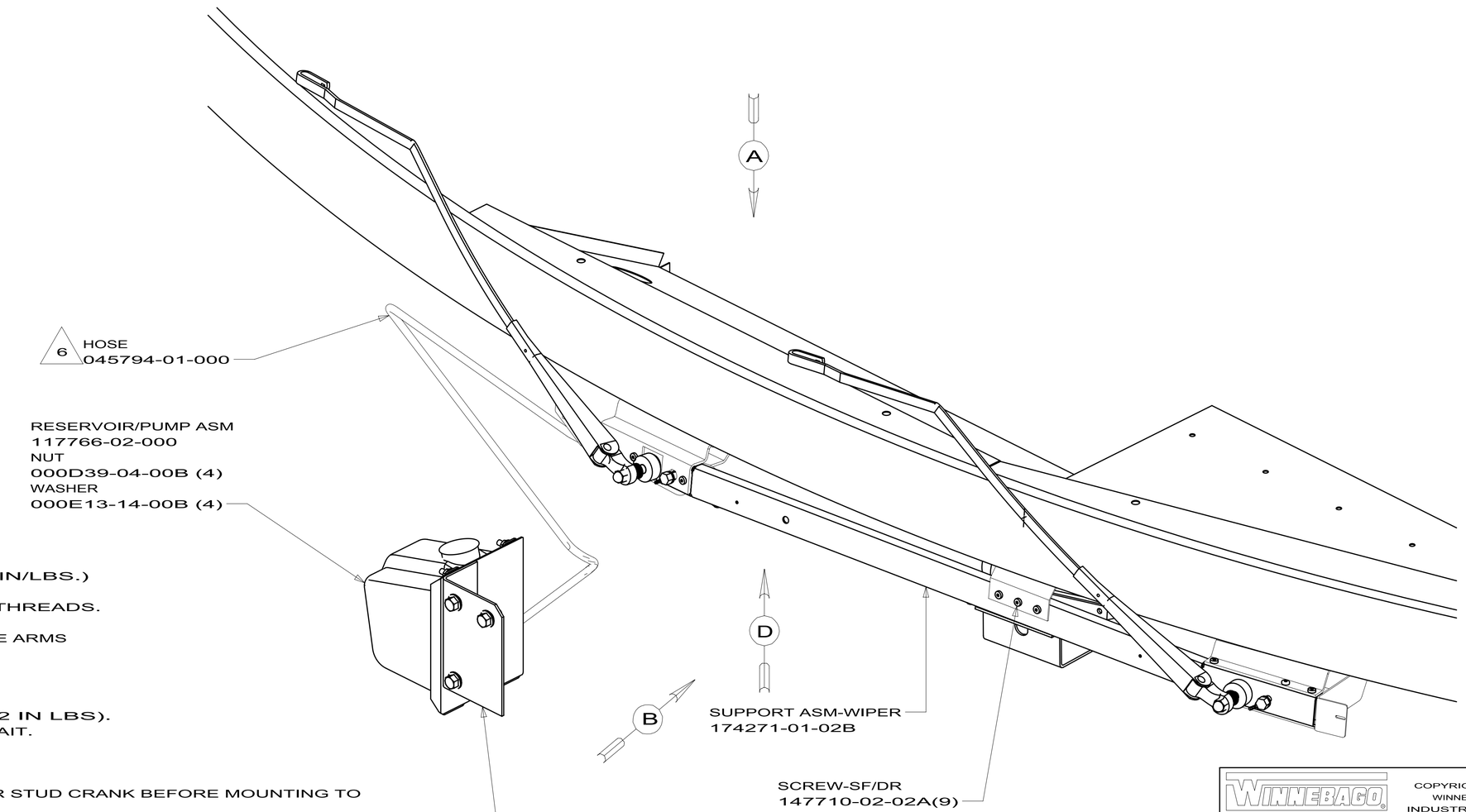

13. TORQUE TO 25 NM ±2.5 NM (220 IN/LBS ±20 IN/LBS.)

12. APPLY LOCTITE NO. 243 (062917-06-000) TO THREADS.

11. WIPER MOTOR NOT TO BE OPERATED UNLESS THE ARMS AND BLADES ARE INSTALLED.

10 SUPPLIED WITH SHAFT-ADAPTER.

9. TORQUE TO 14 NM ± 1.4 NM (124 IN LBS ± 12 IN LBS). RETORQUE AFTER A MINIMUM OF 30 MINUTE WAIT.

8. TORQUE TO 17.0 NM (150 IN LBS).

7. DRIVERS SIDE LINK MUST BE MOUNTED TO WIPER STUD CRANK BEFORE MOUNTING TO MOTOR CRANK ARM IN ORDER SHOWN.

6. ROUTE WASHER LINES ALONG FRONT EDGE OF LOWER WINDSHIELD SUPPORT AND SECURE WITH PLASTIC TIE 008343-01-000 (2).

5. APPLY LOCTITE NO 242 (070915-02-000) TO THREADS AND HAND TIGHTEN NUT ONLY.

4. APPLY LUBRICANT TO SURFACE OF ALL BALL JOINTS (4) PRIOR TO ASSEMBLY OF LINKAGE.

3 SUPPLIED WITH PIVOT SHAFT ASM.

2. PARK BLADES HORIZONTAL TO TOP OF COWL ASSEMBLY.

1. FILL WASHER BOTTLE WITH FLUID 079969-01 AND CHECK SYSTEM OPERATION.

NOTES:

WINNEBAGO INDUSTRIES
COPYRIGHT 2010 WINNEBAGO INDUSTRIES, INC.

DFTR	ORIG. DATE
CHKR	ALL DIMENSIONS ARE IN MILLIMETERS
P.E.	
M.E.	FIRST USED
DSNR	10 E-SERIES

UNSPECIFIED TOLERANCES ARE:
WHOLE DIM (X) : 3
ONE-PLACE (X.X) : 1.5
TWO-PLACE (X.XX) : 0.50
ANGLE : 1°

MATERIAL:

THIRD ANGLE PROJECTION

DO NOT SCALE DRAWING

REFER TO ES0018 FOR FASTENER TIGHTENING GUIDELINES

TITLE:
WIPER-WASHER INSTL,UNITIZED

SHEET 1 OF 4 | PART NO 174979 | REV

REF: 1

2/23/2010

DWG NO 174979

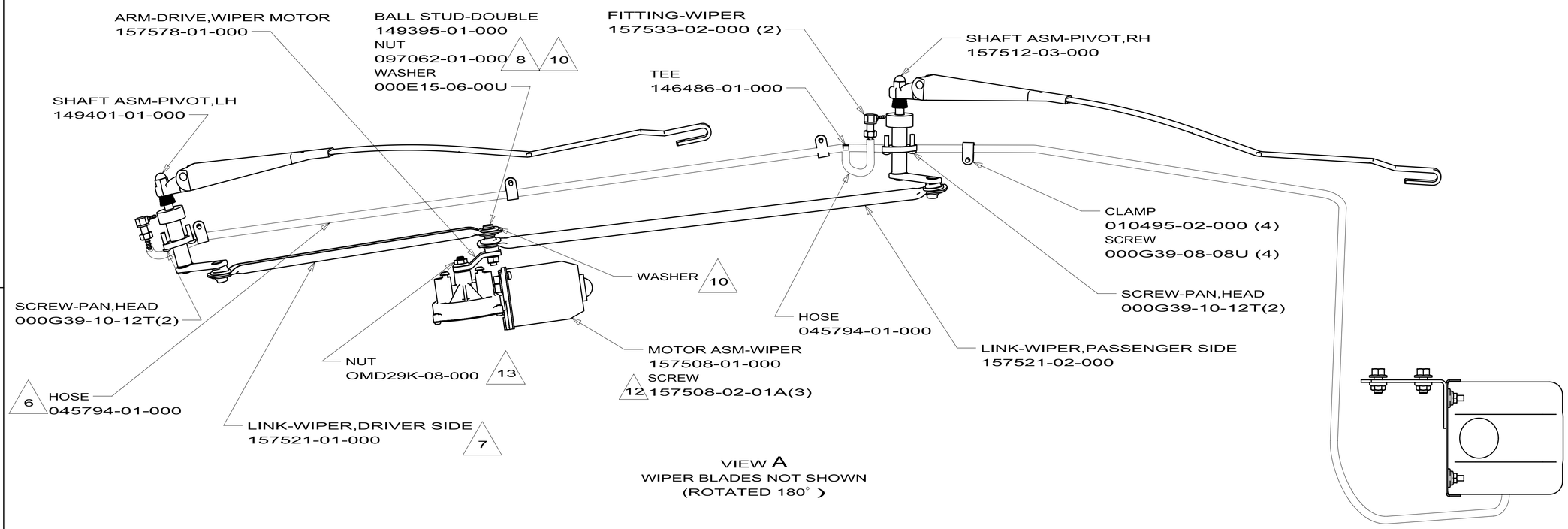

VIEW A
WIPER BLADES NOT SHOWN
(ROTATED 180°)

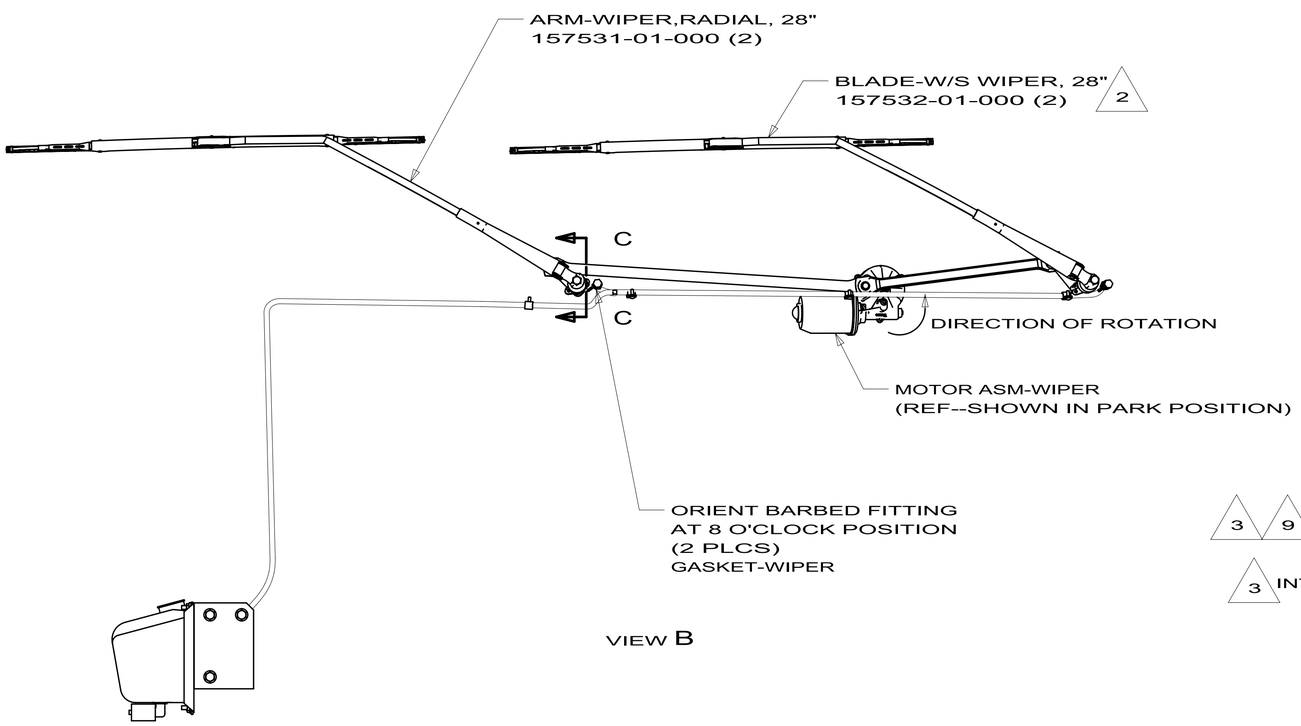

VIEW B

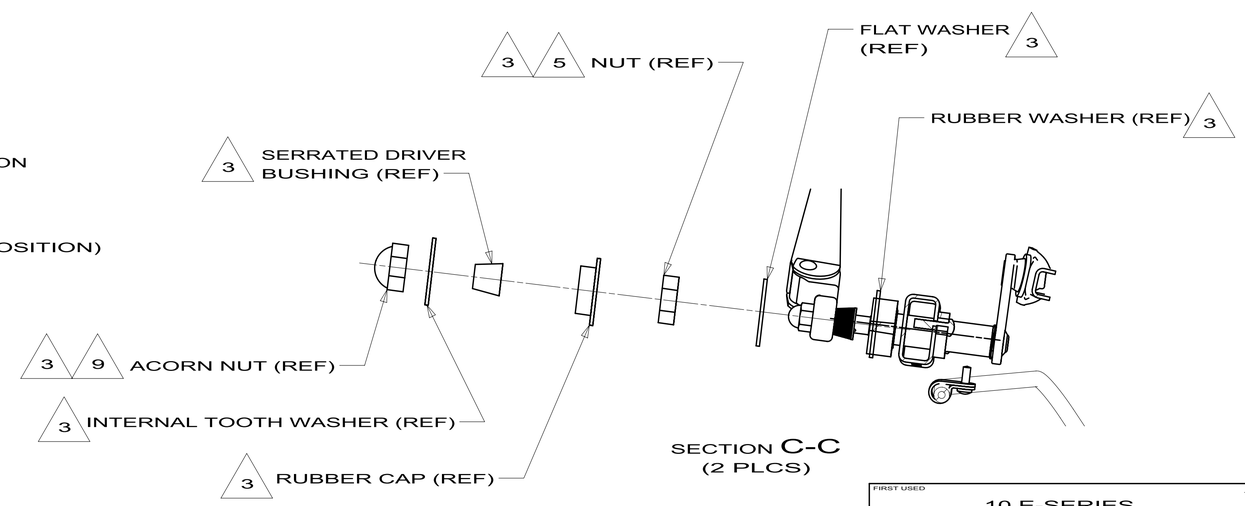

SECTION C-C
(2 PLCS)

FIRST USED	10 E-SERIES
	DO NOT SCALE DRAWING
TITLE:	WIPER-WASHER INSTL,UNITIZED
SHEET 2	PART NO. 174979 REV

2/23/2010

DWG NO 174979

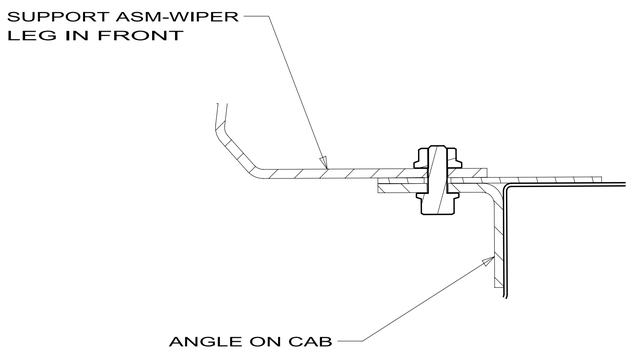

SECTION G-G
(2 PLCS)

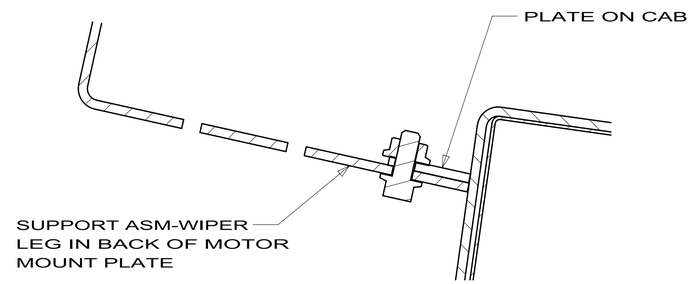

SECTION E-E

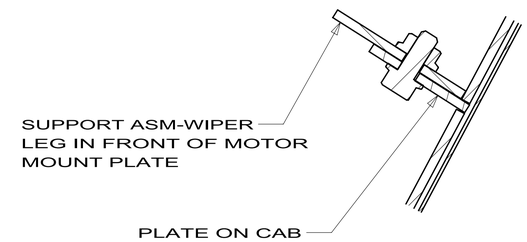

SECTION F-F

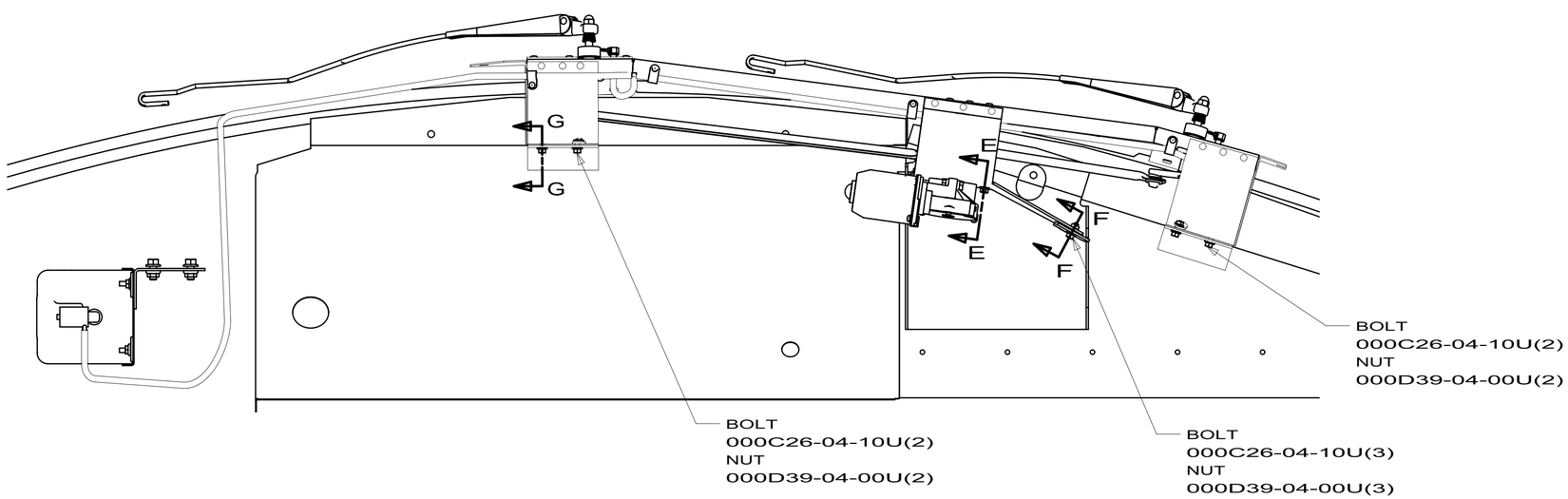

VIEW D

FIRST USED	10 E-SERIES
	DO NOT SCALE DRAWING
TITLE:	WIPER-WASHER INSTL,UNITIZED
SHEET 3	PART NO. 174979 REV

2/23/2010

DWG NO 174979

REVISIONS				
ZONE	REV.	DESCRIPTION	DATE	APPROVED
N/A	A	UPDATE DRAWING	8/29/2005	S.M.

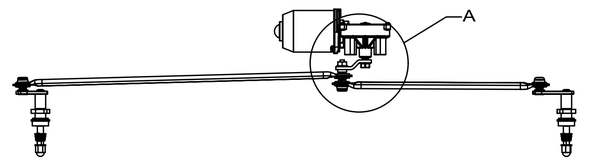

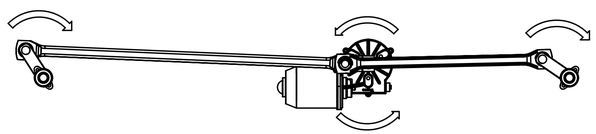

MOTOR
ROTATION

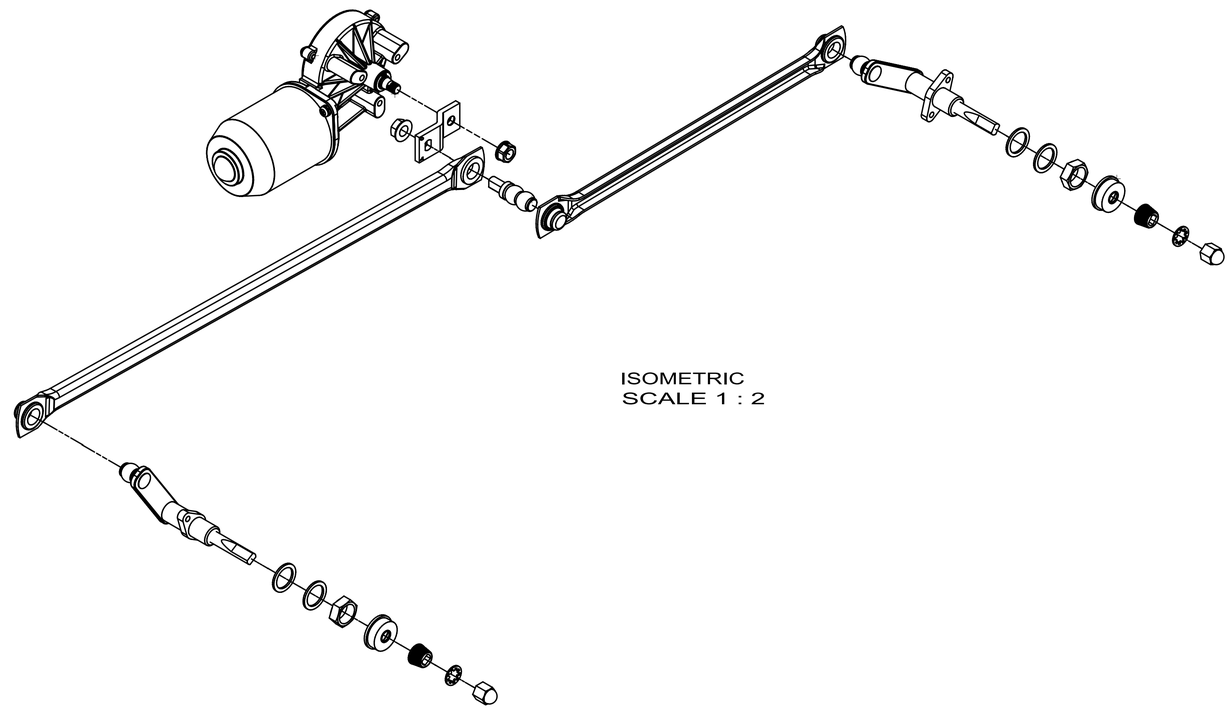

ISOMETRIC
SCALE 1 : 2

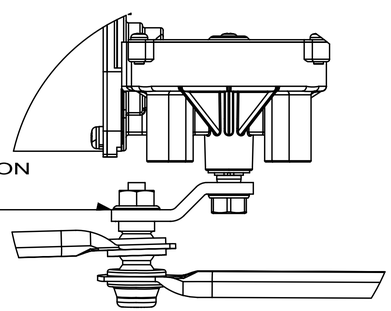

PARK MOTOR CRANK
AT THE 9:00 POSITION
± 5° WHILE FACING
MOTOR.

DETAIL A
SCALE 1 : 1

PROPRIETARY AND CONFIDENTIAL
THE INFORMATION CONTAINED IN THIS DRAWING IS THE SOLE PROPERTY OF WIPER TECHNOLOGIES. ANY REPRODUCTION IN PART OR AS A WHOLE WITHOUT THE WRITTEN PERMISSION OF WIPER TECHNOLOGIES IS PROHIBITED.

NEXT ASSY	USED ON
APPLICATION	

UNLESS OTHERWISE SPECIFIED
DIMENSIONS ARE IN INCHES
TOLERANCES:
FRACTIONAL ±
ANGULAR ± 1.Ti
TWO PLACE DECIMAL ±0.020
THREE PLACE DECIMAL ±0.010
PUNCHED HOLES ± 0.003
INTERPRET GEOMETRIC TOLERANCING PER:
MATERIAL
FINISH

	NAME	DATE
DRAWN	S.M.	
CHECKED	M.E.W.	
ENG APPR.		
MFG APPR.		
Q.A.		

COMMENTS:
3

WIPER TECHNOLOGIES
BY DIESEL EQUIPMENT COMPANY

TITLE:

SIZE D | DWG. NO. S-MODEL ASSEMBLY | REV A

SCALE: 1 | WEIGHT: | SHEET 1 OF 1

FIRST USED
10 E-SERIES

DO NOT SCALE DRAWING

TITLE:
WIPER-WASHER INSTL,UNITIZED

SHEET 4 | PART NO 174979 | REV

2/23/2010

KEY	PART NUMBER	U/M	DESCRIPTION	149401-01-000,149401-02-000 VENDOR NO.
	096505-02-703	EA	NUT/ACORN - HD W/.687 BRL	51065-40-NT27WC
	149401-01-700	EA	HARDWARE PKG - F/SHAFT&PIVOT	PSHWKIT
	149401-01-701	EA	SEAL CAP/RUBBER GROMMET	300749

KEY	PART NUMBER	U/M	DESCRIPTION	149401-03-000 VENDOR NO.
	096505-02-703	EA	NUT/ACORN - HD W/.687 BRL	51065-40-NT27WC
	149401-01-700	EA	HARDWARE PKG - F/SHAFT&PIVOT	PSHWKIT
	149401-01-701	EA	SEAL CAP/RUBBER GROMMET	300749

COPYRIGHT © 2009 WINNEBAGO INDUSTRIES INC.

157531-01-000

KEY	PART NUMBER	U/M	DESCRIPTION	VENDOR NO.
	157531-01-700	EA	WASHER NOZZLE KIT W/HDW	19475

COPYRIGHT © 2009 WINNEBAGO INDUSTRIES INC.