DRAWING NO.	FEATURE
172370-11	1B1 12D
172370-12	1B1 78J
172370-15	265 12D
172370-16	265 78J

RELEASE	REV A	DATE	DWG NO 172370
REV	ZONE	REVISION RECORD	DATE	DFTR-ORIG

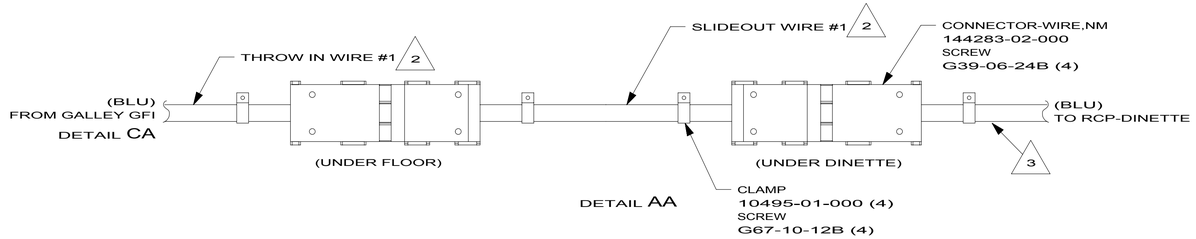

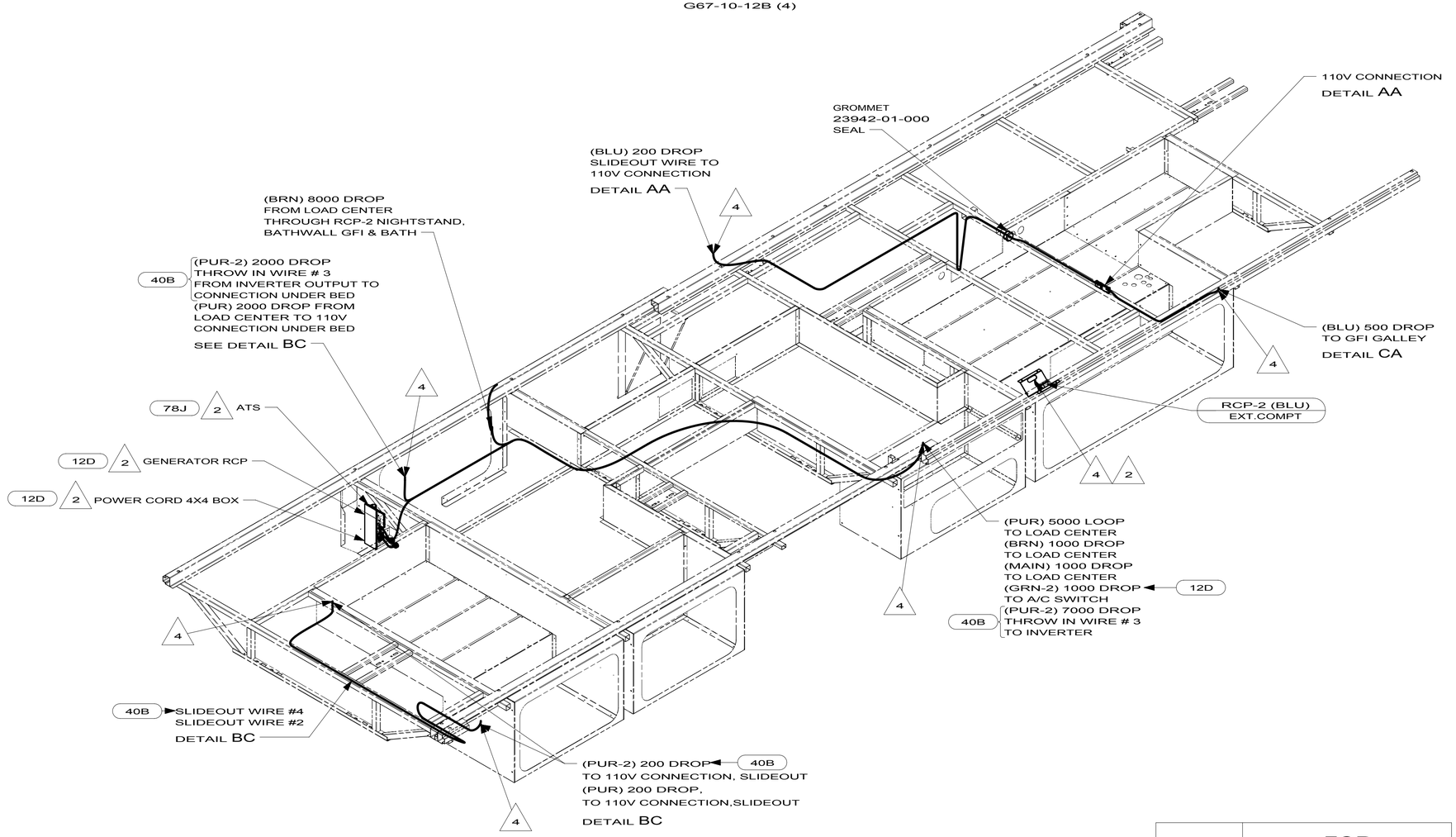

78J	ELECTRICAL SYSTEM-50 AMP
40B	INVERTER-DC/AC, 300 WATT
12D	ELECTRICAL SYSTEM 30 AMP
265	CODES/STANDARDS-CSA/CMVSS
1B1	CODES/STANDARDS USA

1B1 265

5. ALL WIRES TO BE SECURED WITH CLAMP 10495 OR 10497 OR WIRE TIE 8343 OR 108046 EVERY 600MM, USE SCREW G67-XX-XXX OR G56-XX-XXX AS APPROPRIATE FOR INSTALLATION.

4 WIRE ROUTED THROUGH FLOOR IN THIS AREA.

3 WIRE IN SIDEWALL.

2 SEE LOAD CENTER/ATS FOR ADDITIONAL INFORMATION.

1. WIRES ROUTED UNDER FLOOR.

NOTES:

X-X

FOR ELECTRICAL CALLOUTS SEE DWG NO. 121339-01-000

FOR ELECTRICAL TORQUE SPECIFICATIONS SEE DWG NO. 128783-01-000

WINNEBAGO INDUSTRIES

COPYRIGHT 2009
WINNEBAGO
INDUSTRIES, INC.

DFTR	ORIG. DATE
CHKR	ALL DIMENSIONS ARE IN MILLIMETERS
P.E.	
M.E.	FIRST USED
DSNR	10 D35J

UNSPECIFIED TOLERANCES ARE:
WHOLE DIM (X) : 3
ONE-PLACE (X.X) : 1.5
TWO-PLACE (X.XX) : 0.50
ANGLE : 1°

MATERIAL:

THIRD ANGLE PROJECTION

DO NOT SCALE DRAWING

TITLE: WIRING INSTL-BODY,110V

SHEET 1 OF 4 | PART NO 172370 | REV

REF: 1

10/1/2009

DWG NO 172370

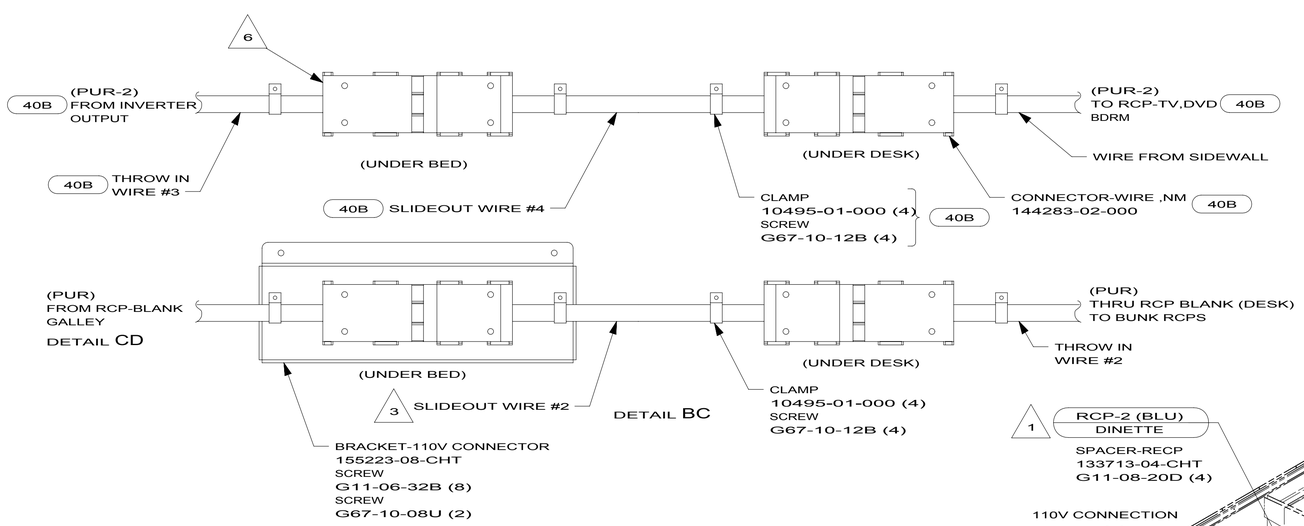

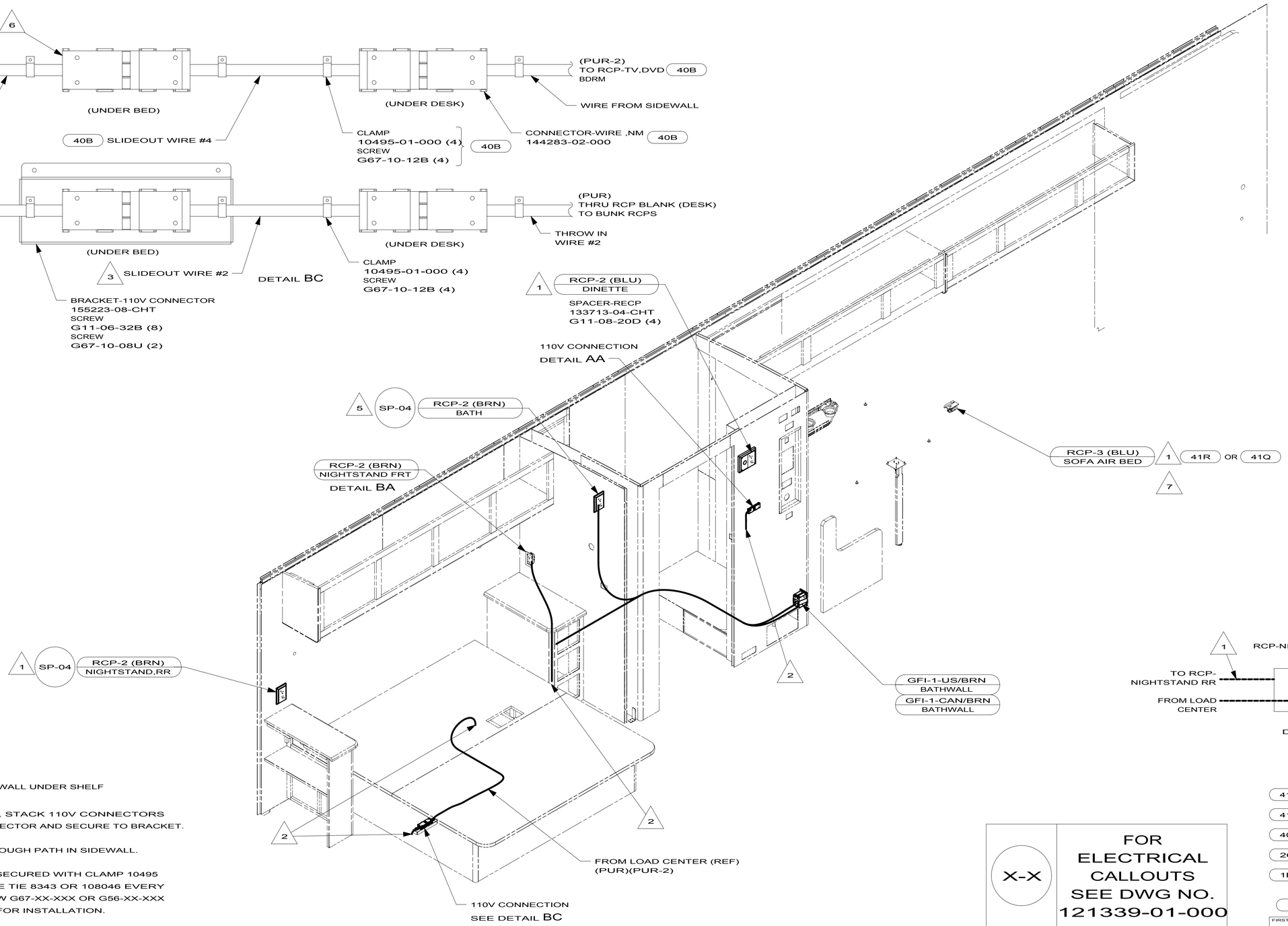

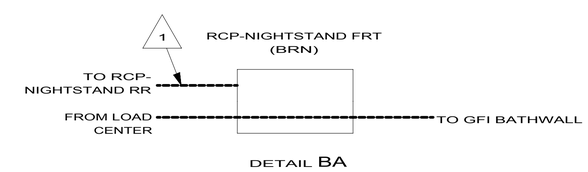

7 MOUNT OUTLET TO WALL UNDER SHELF

6 WITH 40B OPTION, STACK 110V CONNECTORS ON PUR 110V CONNECTOR AND SECURE TO BRACKET.

5 WIRE ROUTED THROUGH PATH IN SIDEWALL.

4. ALL WIRES TO BE SECURED WITH CLAMP 10495 OR 10497 OR WIRE TIE 8343 OR 108046 EVERY 600MM, USE SCREW G67-XX-XXX OR G56-XX-XXX AS APPROPRIATE FOR INSTALLATION.

3 SEE LOAD CENTER/ATS FOR ADDITIONAL INFORMATION.

2 WIRE ROUTES THRU FLOOR IN THIS AREA.

1 WIRE ROUTED IN SIDEWALL

NOTES:

X-X FOR ELECTRICAL CALLOUTS SEE DWG NO. 121339-01-000

FOR ELECTRICAL TORQUE SPECIFICATIONS SEE DWG NO. 128783-01-000

41Q SOFA/SLEEPER-ULTRALEATHER HP

41R SOFA/SLEEPER

40B INVERTER-DC/AC, 300 WATT

265 CODES/STANDARDS-CSA/CMVSS

1B1 CODES/STANDARDS USA

1B1 265

FIRST USED 10 D35J

DO NOT SCALE DRAWING

TITLE: WIRING INSTL-BODY,110V

SHEET 2 | PART NO 172370 | REV

10/1/2009

DWG NO 172370

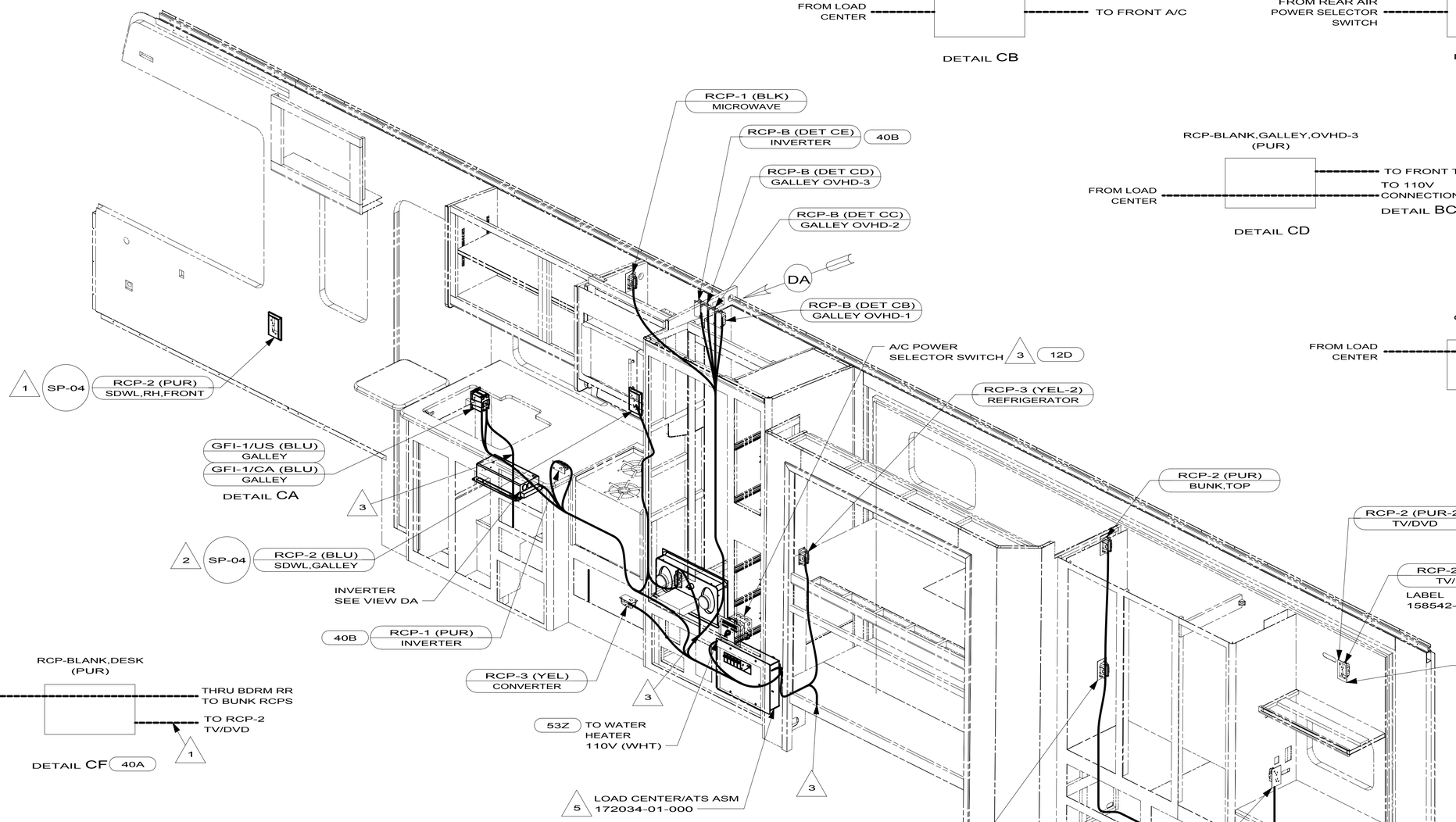

RCP-BLANK,GALLEY,OVHD-1
(RED)

FROM LOAD CENTER — TO FRONT A/C

DETAIL CB

RCP-BLANK,GALLEY,OVHD-2
(GRN)

FROM REAR AIR POWER SELECTOR SWITCH — TO REAR A/C

DETAIL CC

RCP-BLANK,GALLEY,OVHD-3
(PUR)

FROM LOAD CENTER — TO FRONT TV; TO 110V CONNECTION UNDER BED

DETAIL CD

DETAIL BC

GFI-GALLEY
(BLU)

FROM LOAD CENTER — TO GFI GALLEY; TO 110V CONNECTION UNDER FLOOR

DETAIL CA

DETAIL AA

THROW IN WIRE #1

RCP-BLANK,DESK
(PUR)

FROM 110V CONNECTOR — THRU BDRM RR TO BUNK RCPS; TO RCP-2 TV/DVD

1

DETAIL CF 40A

RCP-BLANK, INVERTER
(PUR-2)

TO 110V CONNECTION UNDER BED — THROW IN WIRE #3; (PUR-2) FROM INVERTER OUTPUT; (PUR-2) FROM ROOF TO FRONT TV

DETAIL BC

7

DETAIL CE

40B

8 SEE WIRING INSTL-TV/DVD FOR ADDITIONAL INFORMATION.

7 WIRE ROUTED IN ROOF.

6 WITHOUT 1JU .

5 LOAD CENTER GROUND WIRES MUST BE ATTACHED DIRECTLY TO CHASSIS GROUND.

4. ALL WIRES TO BE SECURED WITH CLAMP 10495 OR 10497 OR WIRE TIE 8343 OR 108046 EVERY 600MM, USE SCREW G67-XX-XXX OR G56-XX-XXX AS APPROPRIATE FOR INSTALLATION.

3 WIRES ROUTE THRU FLOOR IN THIS AREA.

2 ROUTE WIRE THRU SIDEWALL.

1 WIRE ROUTED IN SIDEWALL.

NOTES:

12D	ELECTRICAL SYSTEM 30 AMP
40A	INVERTER-DC/AC WITHOUT
40B	INVERTER-DC/AC, 300 WATT
1JU	TV (REAR)-19"COLOR, STEREO
53Z	WTR HTR-6GAL/110/LP/MTR/AUTO
265	CODES/STANDARDS-CSA/CMVSS
1B1	CODES/STANDARDS USA

1B1 265

X-X

FOR ELECTRICAL CALLOUTS SEE DWG NO. 121339-01-000

FOR ELECTRICAL TORQUE SPECIFICATIONS SEE DWG NO. 128783-01-000

FIRST USED 10 D35J

DO NOT SCALE DRAWING

TITLE: WIRING INSTL-BODY,110V

SHEET 3 | PART NO 172370 | REV

10/1/2009

DWG NO 172370

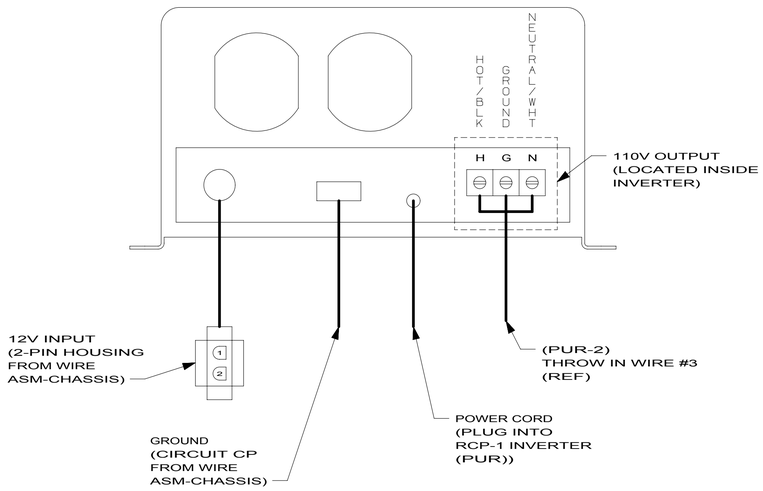

DETAIL DB 40B

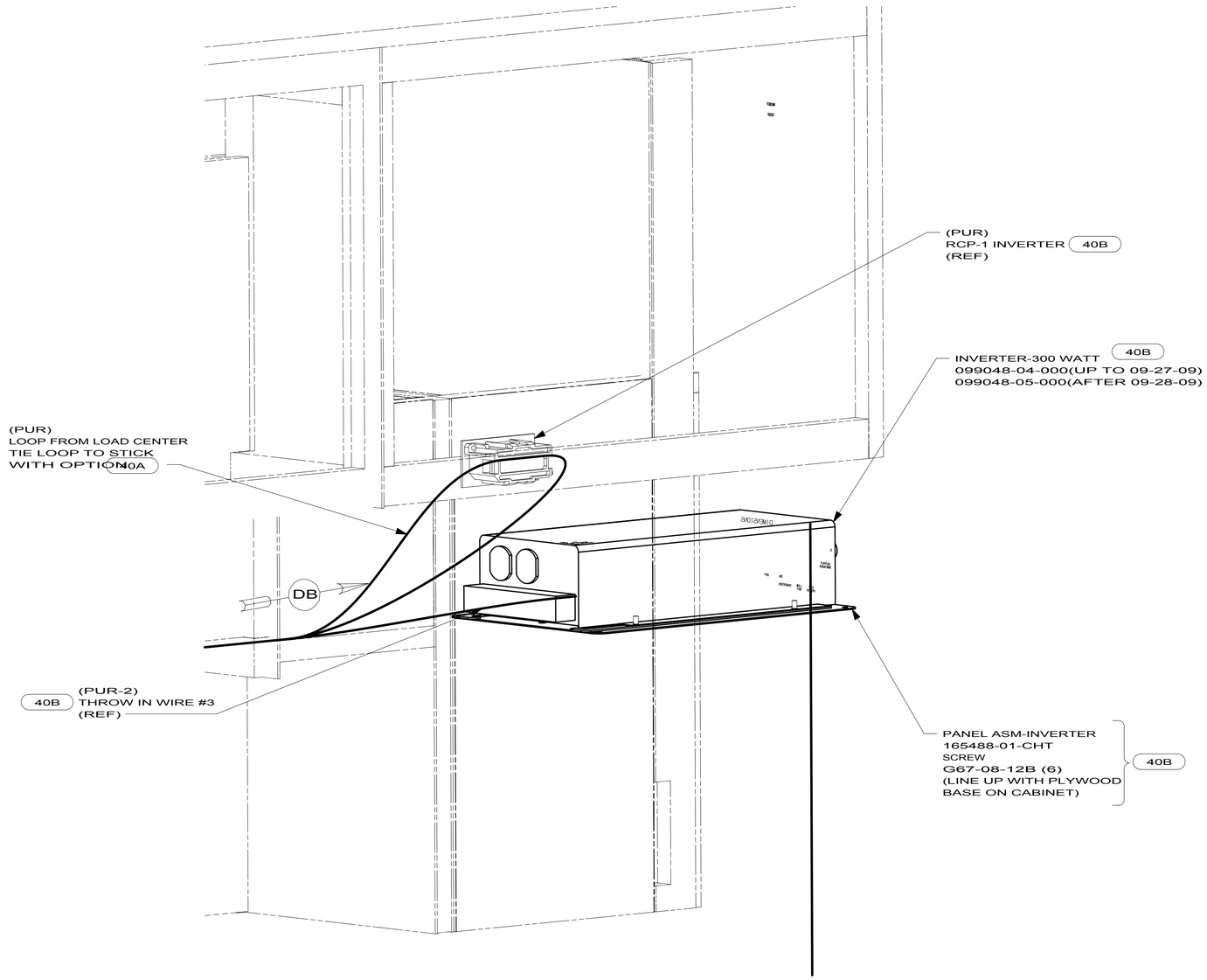

VIEW DA

40A INVERTER-DC/AC WITHOUT

40B INVERTER-DC/AC, 300 WATT

265 CODES/STANDARDS-CSA/CMVSS

1B1 CODES/STANDARDS USA

1B1 265

FOR ELECTRICAL TORQUE SPECIFICATIONS SEE DWG NO. 128783-01-000

X-X FOR ELECTRICAL CALLOUTS SEE DWG NO. 121339-01-000

FIRST USED 10 D35J

DO NOT SCALE DRAWING

TITLE: WIRING INSTL-BODY,110V

SHEET 4 | PART NO 172370 | REV

10/1/2009

		D33C	D31E	D35J	D37L	
RED	12-UL	136135-07-055	136135-07-037	136135-07-040	136135-07-038	
	12-CA	136136-07-055	136136-07-037	136136-07-040	136136-07-038	
YEL	14-UL	136131-05-016	136131-05-020	136131-05-025	136131-05-013	
	14-CA	136134-05-016	136134-05-020	136134-05-025	136134-05-013	
YEL-2	14-UL	136131-13-083 (4)	136131-13-022	136131-13-025	136131-13-020	
	14-CA	136134-13-083 (4)	136134-13-022	136134-13-025	136134-13-020	
BLK	14-UL	136131-06-083 (4)	136131-06-042	136131-06-045	136131-06-043	
	14-CA	136134-06-083 (4)	136134-06-042	136134-06-045	136134-06-043	
BRN	14-UL	136131-03-090 (4)	136131-03-142	136131-03-155	136131-03-092 (4)	
	14-CA	136134-03-090 (4)	136134-03-142	136134-03-155	136134-03-092 (4)	
BLU	14-UL	136131-02-070 (4)	136131-02-122	136131-02-110	136131-02-139 (4)	
	14-CA	136134-02-070 (4)	136134-02-122	136134-02-110	136134-02-139 (4)	
MAIN	10-UL	136137-01-060	136137-01-066	136137-01-065	136137-01-081	12D
	10-CA	136138-01-060	136138-01-066	136138-01-065	136138-01-081	12D
	6-3 UL	136139-01-060	136139-01-066	136139-01-065	136139-01-081	78J
	6-3 CA	136140-01-060	136140-01-066	136140-01-065	136140-01-081	78J
GROUND	8-G	136145-01-010	136145-01-021	136145-01-035	136145-01-011	
GRN	12-UL	136135-08-050	136135-08-036	136135-08-036	136135-08-034	12D
	12-CA	136136-08-050	136136-08-036	136136-08-036	136136-08-034	12D
	12-UL	136135-08-052	136135-08-038	136135-08-039	136135-08-038	78J
	12-CA	136136-08-052	136136-08-038	136136-08-039	136136-08-038	78J
GRN-2	12-UL	136135-14-058	136135-14-055	136135-14-070	136135-14-076	12D
	12-CA	136136-14-058	136136-14-055	136136-14-070	136136-14-076	12D
GRY	14-UL	-----	-----	-----	136131-15-021 (4)	
	14-CA	-----	-----	-----	136134-15-021 (4)	

		D33C	D31E	D35J	D37L
GRN-3	12-UL	136135-18-011 (12D)	136135-18-022 (12D)	136135-18-015 (12D)	136135-18-019 (12D)
	12-CA	136136-18-011 (12D)	136136-18-022 (12D)	136136-18-015 (12D)	136136-18-019 (12D)
PUR	14-UL	136131-04-257 (4)	136131-04-214 (4)	136131-04-175 (4)	136131-04-205 (4)
	14-CA	136134-04-257 (4)	136134-04-214 (4)	136134-04-175 (4)	136134-04-205 (4)
SLIDEOUT WIRE #1		136151-06-027 (5)	136151-03-047 (6)	136151-02-050 (6)	136151-02-018 (5)
SLIDEOUT WIRE #2		136151-13-022 (5)	136151-04-032 (5)	136151-04-040 (8)	136151-04-018 (5)
SLIDEOUT WIRE #3		136151-06-022 (5)	-----	-----	136151-12-018 (5)
SLIDEOUT WIRE #4		136151-04-022 (5) 40A 21W	-----	136151-12-040 (8) 40B	-----
SLIDEOUT WIRE #5		136151-12-022 (5) 40B 21W	-----		
THROW IN WIRE #1	14-UL	136131-02-013 (4)	136131-03-027 (4)	136131-02-021 (4)	136131-15-014 (4)
	14-CA	136134-02-013 (4)	136134-03-027 (4)	136134-02-021 (4)	136134-15-014 (4)
THROW IN WIRE #2	14-UL	136131-04-013 (4) 40A 21W	-----	136131-04-087 (4)	136131-04-109 (4)
	14-CA	136134-04-013 (4) 40A 21W	-----	136134-04-087 (4)	136134-04-109 (4)
THROW IN WIRE #3	14-UL	136131-12-013 (4) 40B 21W	136131-12-035 40B	136131-12-135 (4) 40B	136131-12-027 (4)
	14-CA	136134-12-013 (4) 40B 21W	136134-12-035 40B	136134-12-135 (4) 40B	136134-12-027 (4)
THROW IN WIRE #4	14-UL	136131-06-040 (4)	-----	-----	136131-04-013 (4)
	14-CA	136134-06-040 (4)	-----	-----	136134-04-013 (4)
THROW IN WIRE #5	14-UL	136131-13-020 (4)	-----	-----	136131-12-013 (4)
	14-CA	136134-13-020 (4)	-----	-----	136134-12-013 (4)
THROW IN WIRE #6	14-UL	136131-12-200 (4) 40B	-----	-----	136131-12-195 (7) 40D
	14-CA	136134-12-200 (4) 40B	-----	-----	136134-12-195 (7) 40D
THROW IN WIRE #7	14-UL	136131-03-042 (4)	-----	-----	136131-02-031 (4)
	14-CA	136134-03-042 (4)	-----	-----	136134-02-031 (4)
THROW IN WIRE #8	14-UL	136131-03-058 (4)	-----	-----	136131-04-046 (4)
	14-CA	136134-03-058 (4)	-----	-----	136134-04-046 (4)
THROW IN WIRE #9	14-UL	136131-04-003 (4) 40B	-----	-----	136131-12-046 (4) 40D
	14-CA	136134-04-003 (4) 40B	-----	-----	136134-12-046 (4) 40D
THROW IN WIRE #10	14-UL	136131-12-003 (4) 40B & 14W	-----	-----	136131-03-006 (4)
	14-CA	136134-12-003 (4) 40B & 14W	-----	-----	136134-03-006 (4)
THROW IN WIRE #11	14-UL	136131-04-003 (4) 40B & 14W	-----	-----	136131-12-006 (4) 40D
	14-CA	136134-04-003 (4) 40B & 14W	-----	-----	136134-12-006 (4) 40D
GENERATOR CABLE ASM	10-UL	-----	136137-01-039	-----	-----
	10-CA	-----	136138-01-039	-----	-----
	10-UL	-----	136137-01-039 78J	-----	-----
	10-CA	-----	136138-01-039 78J	-----	-----
WHT	12-UL	136135-09-080 53Z	136135-09-073 53Z	136135-09-016 53Z	136135-09-033 53Z
	12-CA	136136-09-080 53Z	136136-09-073 53Z	136136-09-016 53Z	136136-09-033 53Z
THROW IN FRONT OVHD	14-UL	136131-04-025 40A	136131-04-025 40A	136131-04-025 40A	136131-04-025
	14-CA	136134-04-025 40A	136134-04-025 40A	136134-04-025 40A	136134-04-025
ATS GROUND		136145-01-052 78J	136145-01-067 78J	136145-01-075 78J	136145-01-074 78J
SLIDEOUT WIRE #6		136151-03-022 (5)	-----	-----	-----

REV	ZONE	REVISION RECORD	DATE	DFTR-ORIG

RELEASE — REV A — DATE — DWG NO 172034

(9) SEE DETAIL FC FOR CONNECTOR INSTALLATION.

(8) SEE DETAIL FF FOR CONNECTOR INSTALLATION.

(7) SEE DETAIL FG FOR CONNECTOR INSTALLATION.

(6) SEE DETAIL FD FOR CONNECTOR INSTALLATION.

(5) SEE DETAIL FB FOR CONNECTOR INSTALLATION.

(4) SEE DETAIL FA FOR CONNECTOR INSTALLATION.

(3) SEE WIRING INSTL-BODY,12V FOR ADDITIONAL INFORMATION.

(2) SECURE WIRES TO BACKSIDE OF LOAD CENTER WITH WIRE TIE 116673-01-000.

1. ALL GROUNDS WIRES TO BE COVERED WITH TUBING 8041-02-000.

NOTES:

FOR ELECTRICAL TORQUE SPECIFICATIONS SEE DWG NO. 128783-01-000

X-X — FOR ELECTRICAL CALLOUTS SEE DWG NO. 121339-01-000

21W	DINING/BUFFET/TV
41Q	SOFA/SLEEPER-ULTRALEATHER HP
41R	SOFA/SLEEPER
40D	INVERTER-DC/AC,600 WATT
14C	FIREPLACE-ELECTRIC
78J	ELECTRICAL SYSTEM-50 AMP
40A	INVERTER-DC/AC WITHOUT
40B	INVERTER-DC/AC, 300 WATT
53Z	WTR HTR-6GAL/110/LP/MTR/AUTO
12D	ELECTRICAL SYSTEM 30 AMP
265	CODES/STANDARDS-CSA/CMVSS
1B1	CODES/STANDARDS USA

1B1 265

WINNEBAGO INDUSTRIES

COPYRIGHT 2010 WINNEBAGO INDUSTRIES, INC.

DFTR | ORIG. DATE
CHKR | ALL DIMENSIONS ARE IN MILLIMETERS
P.E.
M.E. | FIRST USED
DSNR | 10 D-SERIES

UNSPECIFIED TOLERANCES ARE:
WHOLE DIM (X) : 3
ONE-PLACE (X.X) : 1.5
TWO-PLACE (X.XX) : 0.50
ANGLE : 1°

MATERIAL:

THIRD ANGLE PROJECTION

DO NOT SCALE DRAWING

TITLE: LOAD CENTER/ATS ASM

SHEET 1 OF 6 | PART NO 172034 | REV

REF: 1

2/25/2010

DWG NO 172034

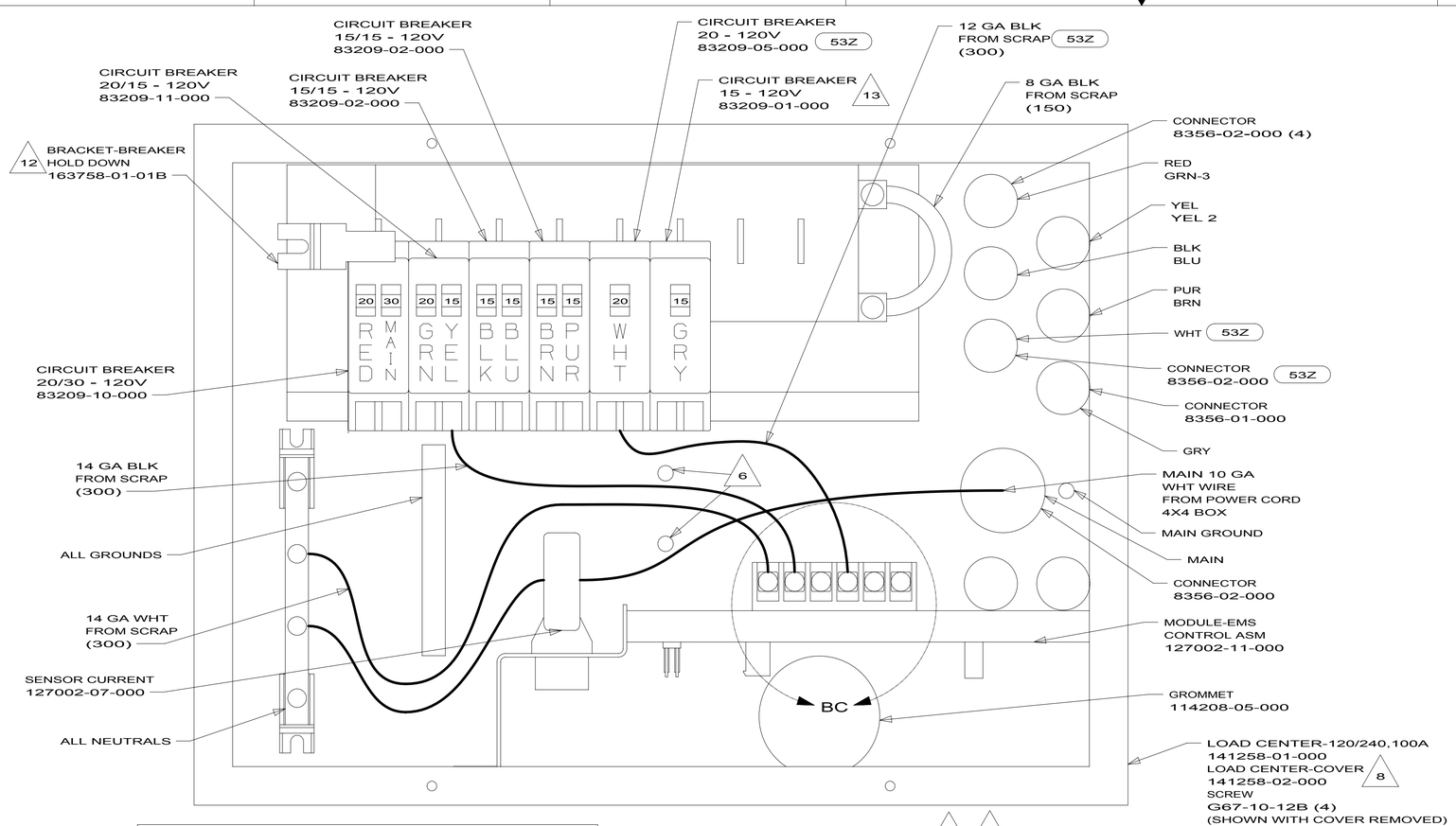

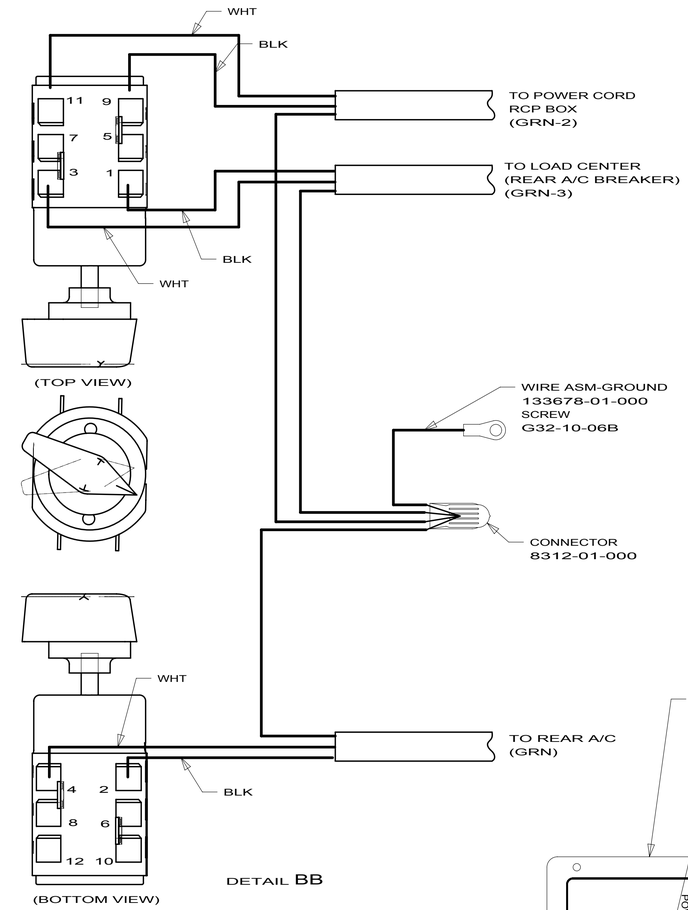

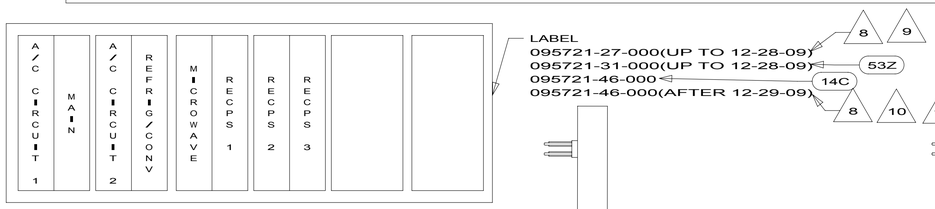

INSTALL LABEL ON FRONT COVER
PLATE BELOW THE BREAKERS

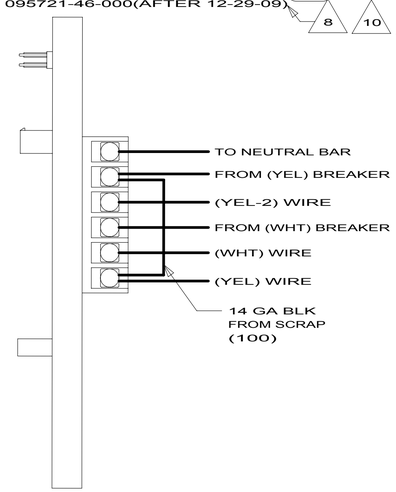

DETAIL BC 53Z

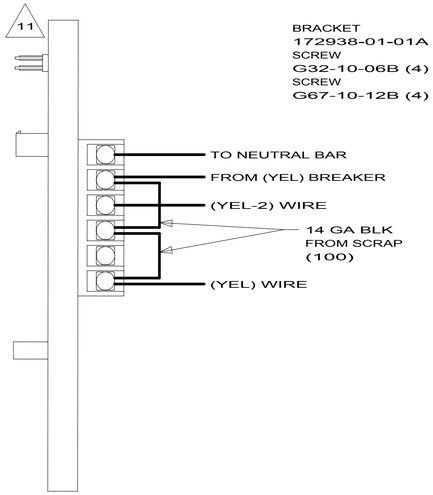

DETAIL BC 9

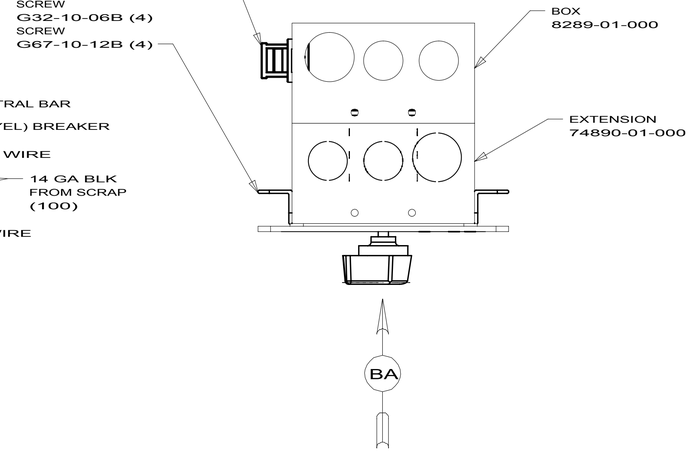

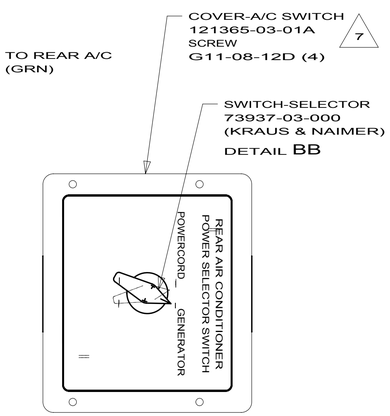

VIEW BA

11 WITHOUT 53Z BLACKEN OUT "WATER HEATER" WITH BLACK MARKER.

10 BLACKEN OUT "WASHER DRYER" WITH BLACK MARKER.

9 WITHOUT 53Z

8 INSTALLED BY ASSEMBLY LINE.

7 FASTEN SWITCH TO COVER BEFORE FASTENING COVER TO BOX.

6 ATTACH WIRES TO BACKSIDE OF LOAD CENTER, USE EXISTING HOLES AND TIE-WIRE 116673-01-000.

5. REMOVE 400MM FROM OUTER JACKET ON ALL WIRES ENTERING LOAD CENTER AND TRIM INDIVIDUAL CONDUCTORS AS REQUIRED TO MAKE INTERNAL CONNECTIONS

4. ALL 110V STRANDED WIRE W/O TERMINALS TO BE STRIPPED 10MM AND SOLDER DIPPED.

3. ALL WIRES TO BE CLAMPED WITHIN 200MM OF ATS.

2. GROUND WIRES ARE NOT SHOWN FOR CLARITY.

1. ALL GROUND WIRES TO BE COVERED WITH TUBING 8041-02-000.

NOTES:

13 USED ON D37L ONLY

12 LOOSEN LEFT BUSS BAR MOUNTING SCREW, INSERT BRACKET-BREAKER HOLD DOWN UNDER SCREW, ORIENTATE BRACKET TOWARD MAIN BREAKER AS SHOWN AND TIGHTEN SCREW.

14C FIREPLACE-ELECTRIC

53Z WTR HTR-6GAL/110/LP/MTR/AUTO

29R AC HEAT PUMP-2 HI EFFICIENCY

276 A/C ROOF-HI EFF (2) W/EMS

12D ELECTRICAL SYSTEM 30 AMP

265 CODES/STANDARDS-CSA/CMVSS

1B1 CODES/STANDARDS USA

1B1 265 12D 276 29R

FOR ELECTRICAL TORQUE SPECIFICATIONS SEE DWG NO. 128783-01-000

X-X FOR ELECTRICAL CALLOUTS SEE DWG NO. 121339-01-000

FIRST USED 10 D-SERIES

DO NOT SCALE DRAWING

TITLE: LOAD CENTER/ATS ASM

SHEET 2 PART NO 172034 REV

2/25/2010

DWG NO 172034

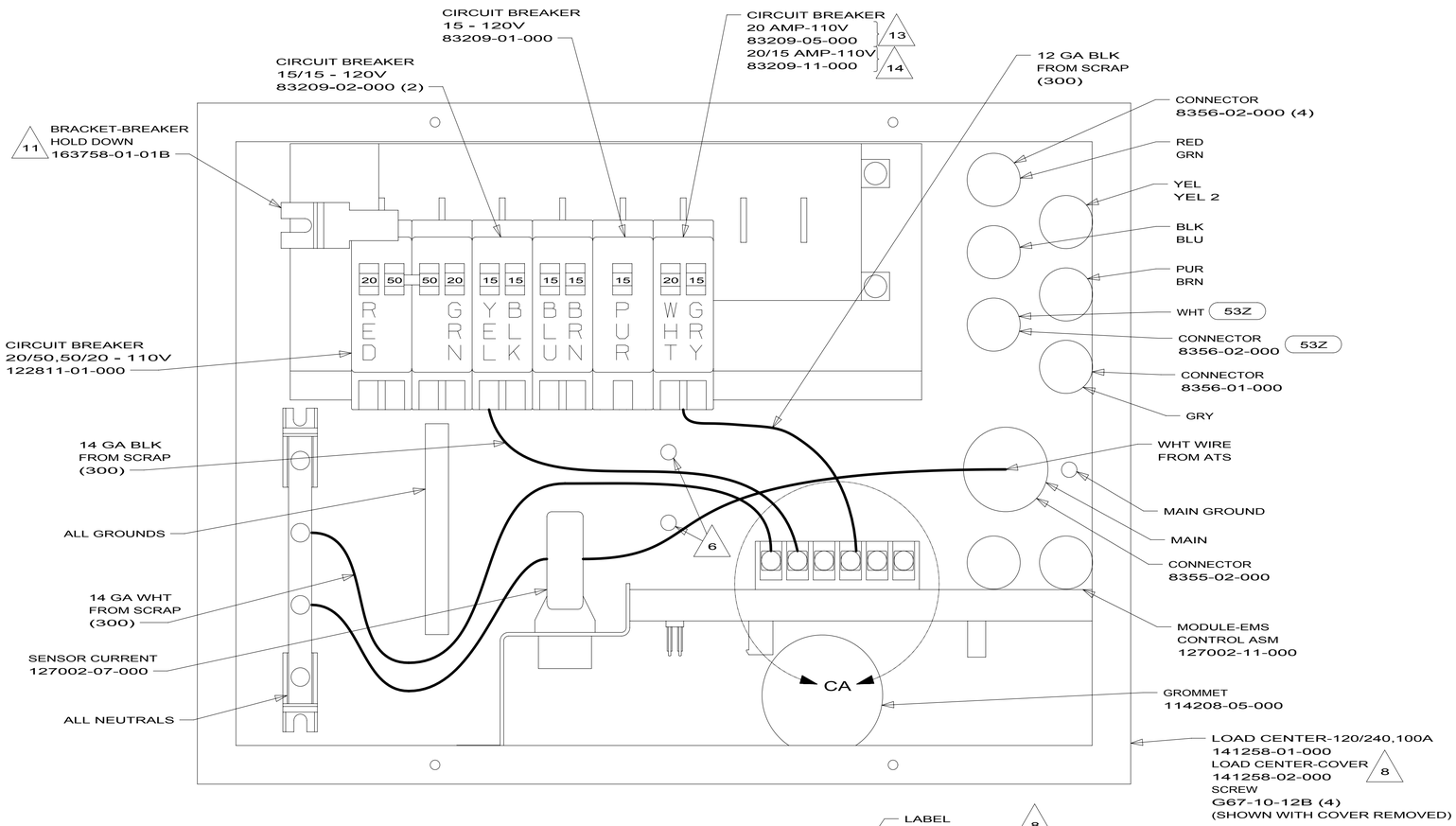

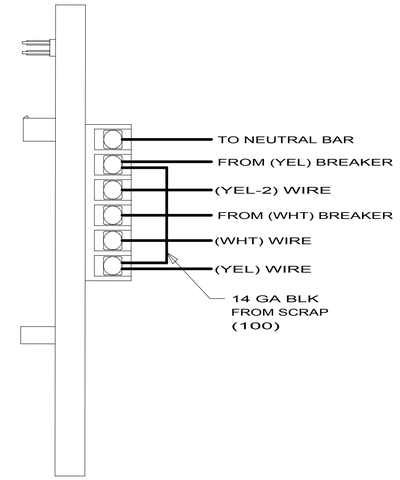

DETAIL CA 53Z

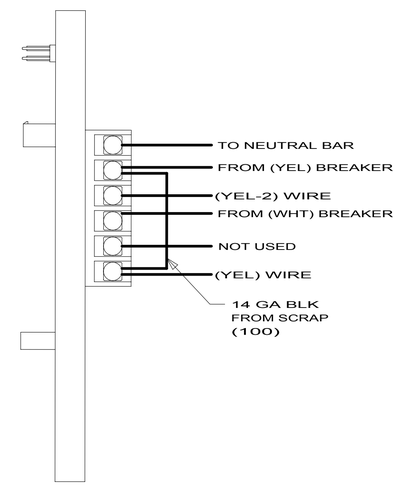

DETAIL CA 9

LABEL
95721-47-000 8

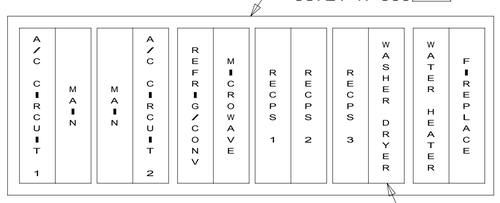

INSTALL LABEL ON FRONT COVER PLATE BELOW THE BREAKERS

10

10 BLACKEN OUT "WASHER DRYER" WITH BLACK MARKER.

9 WITHOUT 53Z

8 INSTALLED BY ASSEMBLY LINE.

7 FASTEN SWITCH TO COVER BEFORE FASTENING COVER TO BOX.

6 ATTACH WIRES TO BACKSIDE OF LOAD CENTER, USE EXISTING HOLES AND TIE-WIRE 116673-01-000.

5. REMOVE 400MM FROM OUTER JACKET ON ALL WIRES ENTERING LOAD CENTER AND TRIM INDIVIDUAL CONDUCTORS AS REQUIRED TO MAKE INTERNAL CONNECTIONS

4. ALL 110V STRANDED WIRE W/O TERMINALS TO BE STRIPPED 10MM AND SOLDER DIPPED.

3. ALL WIRES TO BE CLAMPED WITHIN 200MM OF ATS.

2. GROUND WIRES ARE NOT SHOWN FOR CLARITY.

1. ALL GROUND WIRES TO BE COVERED WITH TUBING 8041-02-000.

NOTES:

14 USED ON D31E, D33C, D35J.

13 USED ON D37L ONLY. 53F

11 LOOSEN LEFT BUSS BAR MOUNTING SCREW, INSERT BRACKET-BREAKER HOLD DOWN UNDER SCREW, ORIENTATE BRACKET TOWARD MAIN BREAKER AS SHOWN AND TIGHTEN SCREW.

53F	WATER HEATER-ELEC. IGNITION
14C	FIREPLACE-ELECTRIC
53Z	WTR HTR-6GAL/110/LP/MTR/AUTO
29R	AC HEAT PUMP-2 HI EFFICIENCY
276	A/C ROOF-HI EFF (2) W/EMS
78J	ELECTRICAL SYSTEM-50 AMP
265	CODES/STANDARDS-CSA/CMVSS
1B1	CODES/STANDARDS USA

1B1 265 78J 276 29R

FOR ELECTRICAL TORQUE SPECIFICATIONS SEE DWG NO. 128783-01-000

X-X FOR ELECTRICAL CALLOUTS SEE DWG NO. 121339-01-000

FIRST USED 10 D-SERIES

DO NOT SCALE DRAWING

TITLE: LOAD CENTER/ATS ASM

SHEET 3 PART NO 172034 REV

2/25/2010

DWG NO 172034

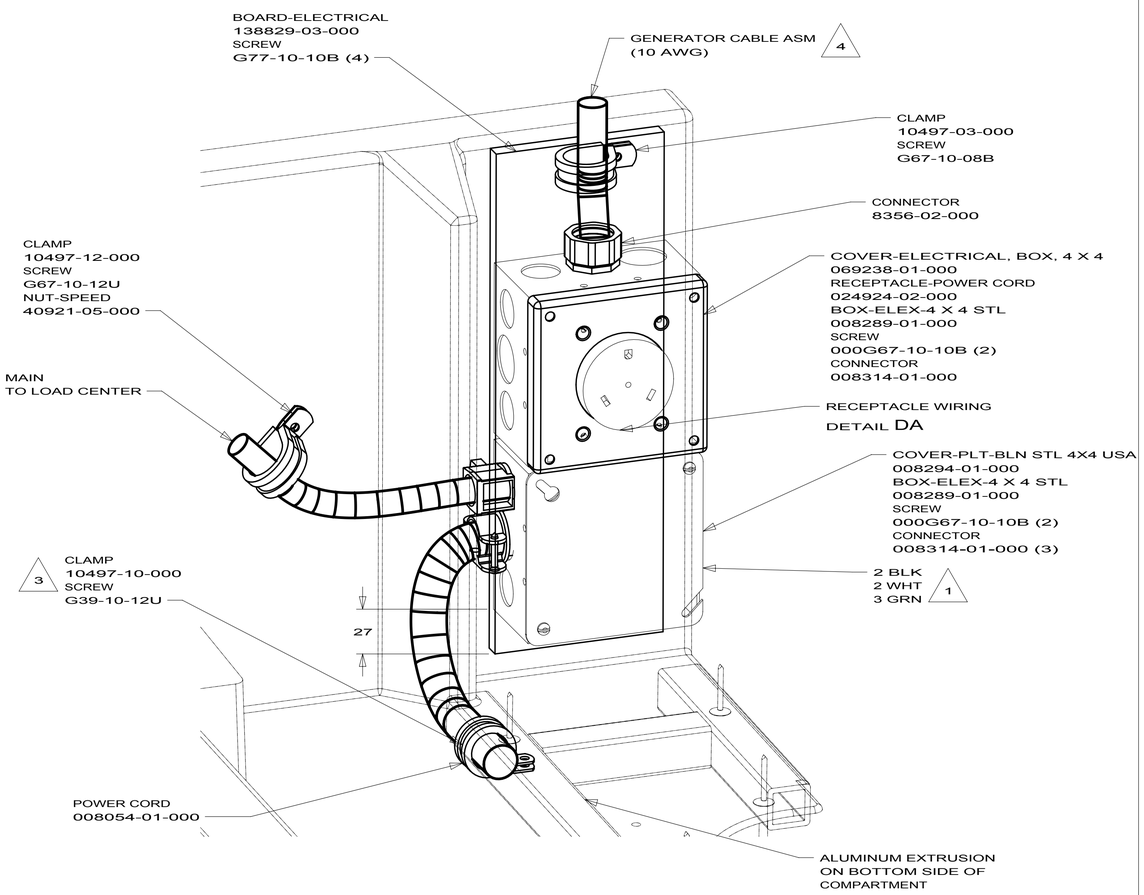

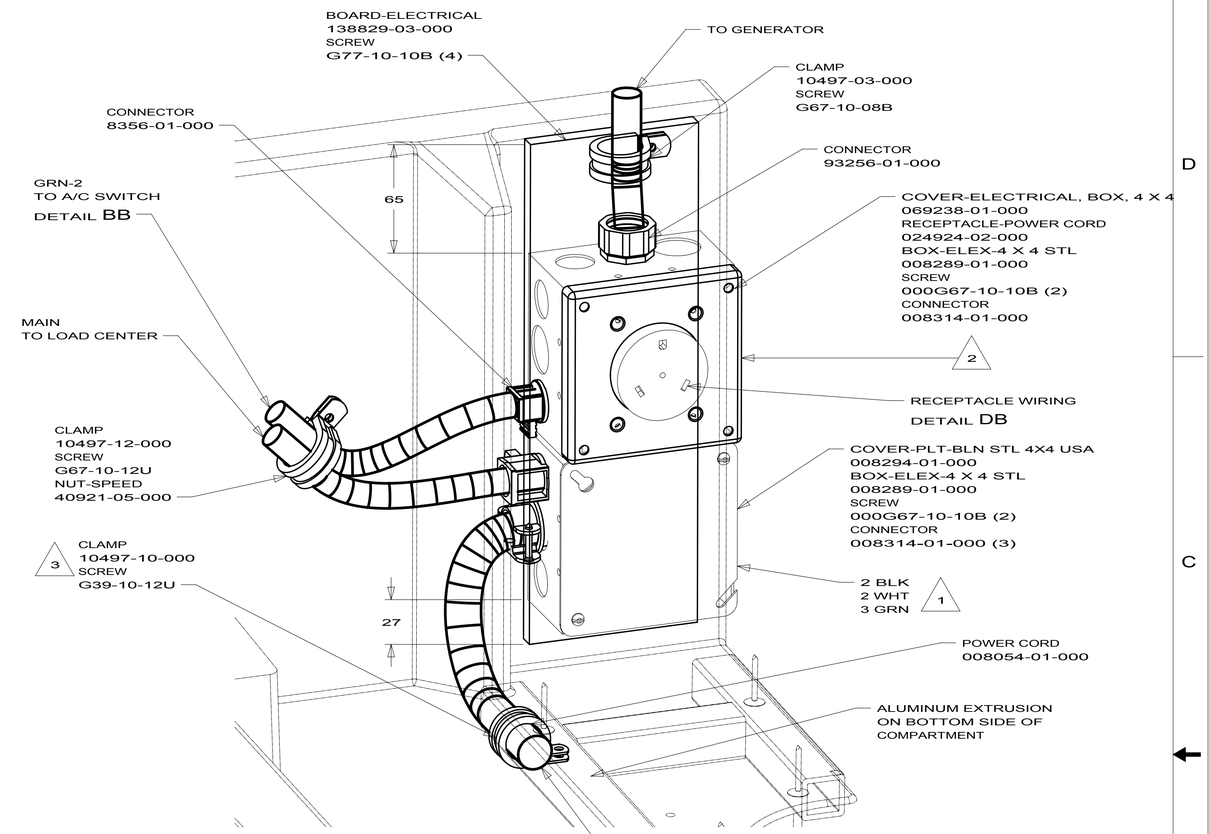

X-X	FOR ELECTRICAL CALLOUTS SEE DWG NO. 121339-01-000

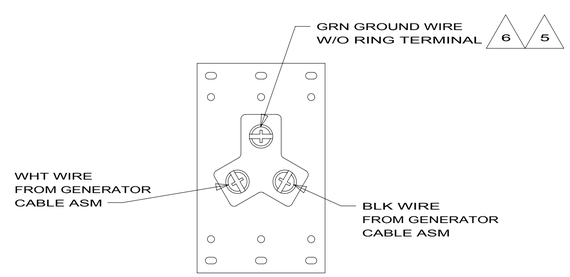

DETAIL DA
(BACK VIEW)

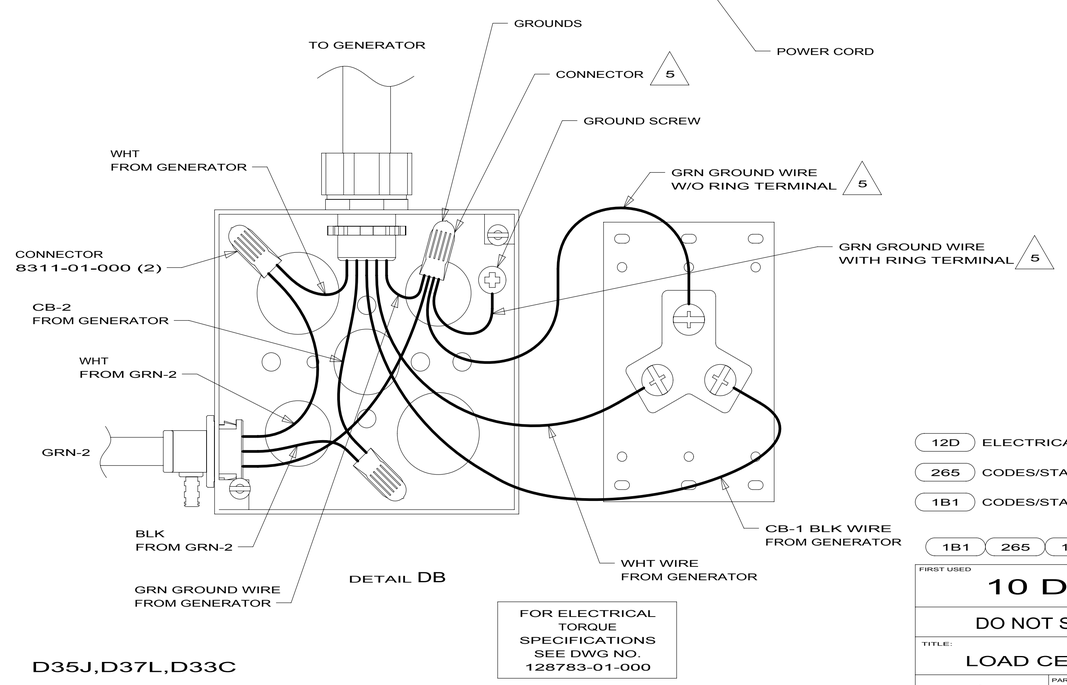

DETAIL DB

6 CONNECT RECEPTACLE GROUND, BOX GROUND, AND GENERATOR GROUND TOGETHER WITH WIRE CONNECTOR.

5 PART OF J-RCP CALLOUT.

4 SEE WIRING INSTL-BODY,110V FOR ADDITIONAL INFORMATION.

3 SCREW CLAMP ON TO THE FLOOR OF COMPARTMENT INTO THE ALUMINUM EXTRUSION ON BOTTOM SIDE OF COMPARTMENT.

2 CONNECT CB-2 BLACK WIRE FROM GENERATOR TO BLACK OF GRN-2 WITH CONNECTOR 8311-01-000 AND WHITES TO WHITES AND GROUNDS TO GROUNDS.

1 CONNECT BLACK TO BLACK, WHITE TO WHITE, AND GROUNDS TO GROUNDS.

NOTES:

D31E

D35J,D37L,D33C

FOR ELECTRICAL TORQUE SPECIFICATIONS SEE DWG NO. 128783-01-000

12D ELECTRICAL SYSTEM 30 AMP

265 CODES/STANDARDS-CSA/CMVSS

1B1 CODES/STANDARDS USA

1B1 265 12D

FIRST USED

10 D-SERIES

DO NOT SCALE DRAWING

TITLE:

LOAD CENTER/ATS ASM

SHEET 4 | PART NO 172034 | REV

2/25/2010

DWG NO 172034

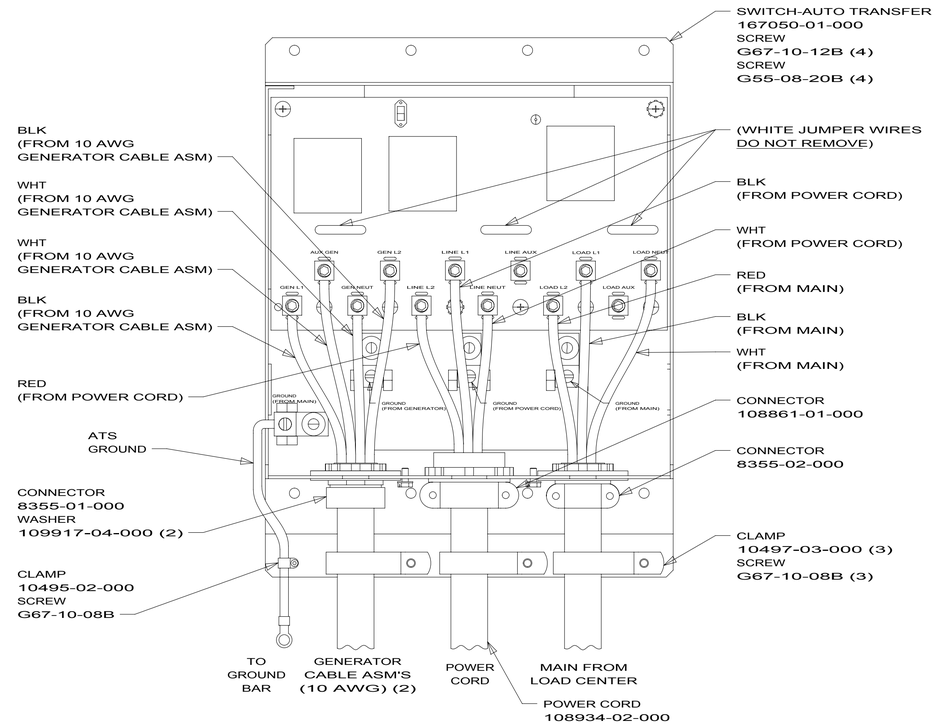

DETAIL EA

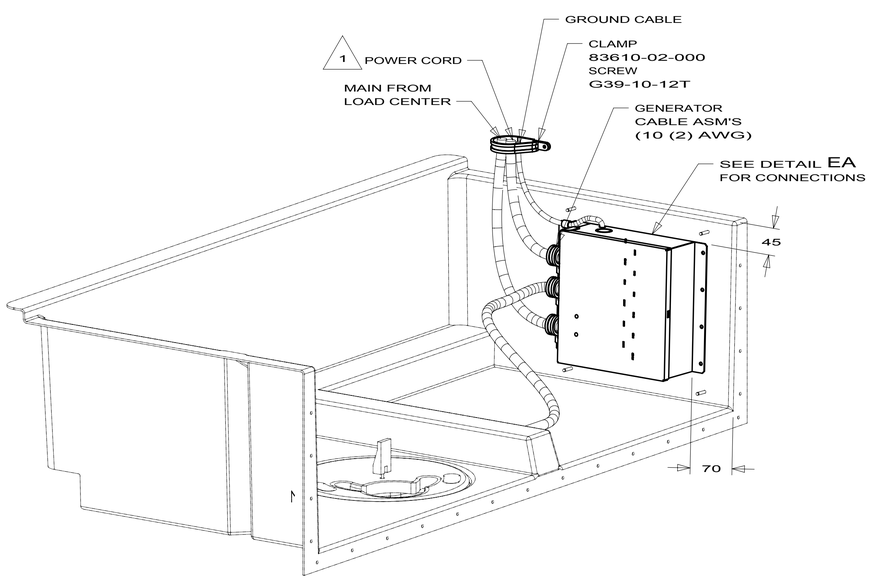

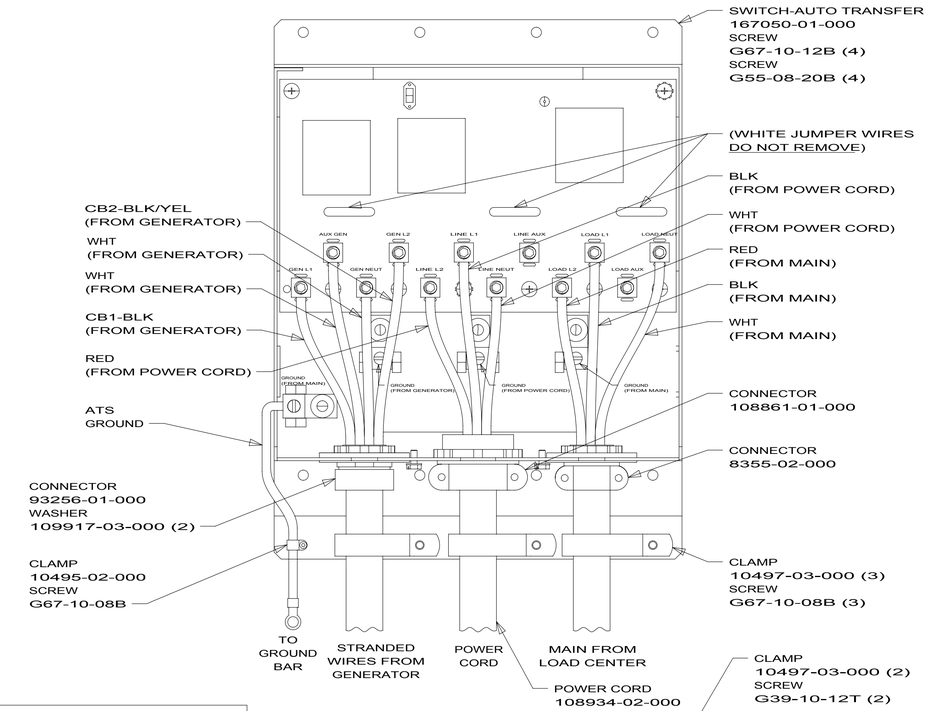

DETAIL EB

X-X	FOR ELECTRICAL CALLOUTS SEE DWG NO. 121339-01-000

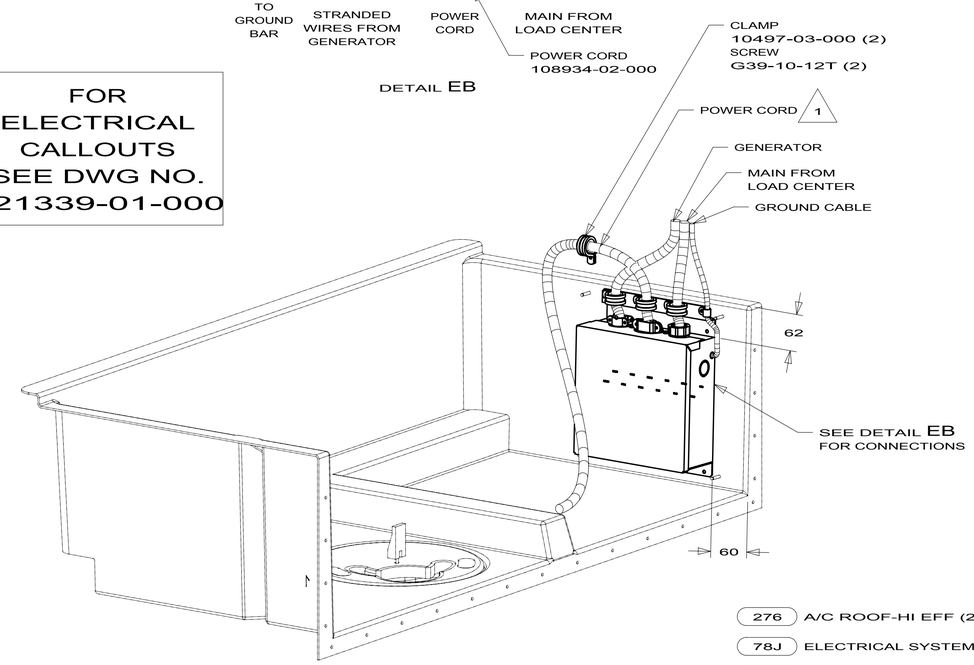

276	A/C ROOF-HI EFF (2) W/EMS
78J	ELECTRICAL SYSTEM-50 AMP
265	CODES/STANDARDS-CSA/CMVSS
1B1	CODES/STANDARDS USA

1B1 265 78J 276

D31E

D35J,D37L,D33C

FOR ELECTRICAL TORQUE SPECIFICATIONS SEE DWG NO. 128783-01-000

1 ROUTE POWER CORD BEHIND WATER CENTER PANEL.

NOTES:

FIRST USED

10 D-SERIES

DO NOT SCALE DRAWING

TITLE:

LOAD CENTER/ATS ASM

SHEET 5 | PART NO 172034 | REV

2/25/2010

DWG NO 172034

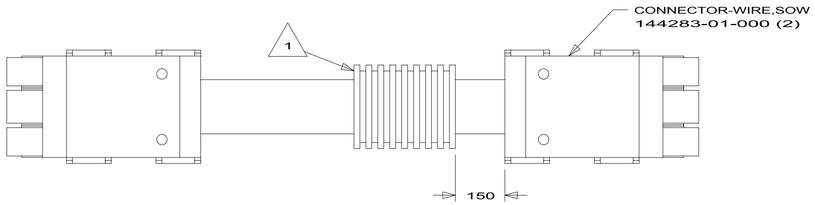

DETAIL FD

DETAIL FB

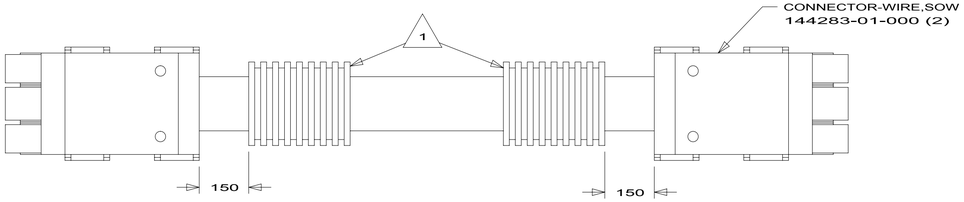

DETAIL FF

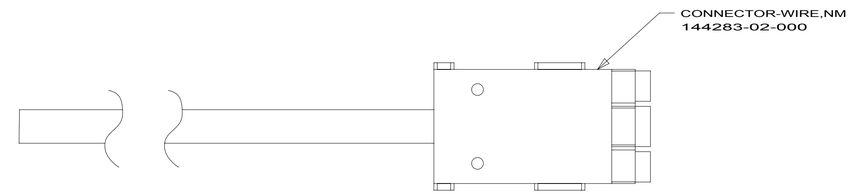

DETAIL FA

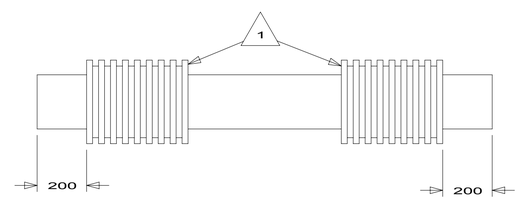

DETAIL FC

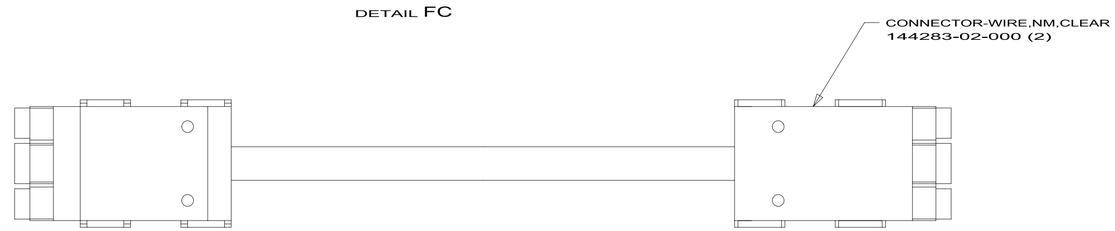

DETAIL FG

53Z	WTR HTR-6GAL/110/LP/MTR/AUTO
29J	AC HEAT PUMP-1
25Q	A/C ROOF AIR (1) 14,800 BTU
12D	ELECTRICAL SYSTEM 30 AMP
265	CODES/STANDARDS-CSA/CMVSS
1B1	CODES/STANDARDS USA

1B1 265 12D

NOTES:

2 ON D29R MEASURE 1200MM FROM THE BACK OF THE LOAD CENTER, LOOP THE BLACK WIRE AND CONNECT AS SHOWN.

1 APPLY 300MM OF CONDUIT-CONVOLUTE 41953-05-000 OVER WIRE AT DIMENSION SHOWN AND SECURE BOTH ENDS OF TUBING TO WIRE WITH TAPE 8363-01-000.

FOR ELECTRICAL TORQUE SPECIFICATIONS SEE DWG NO. 128783-01-000

X-X FOR ELECTRICAL CALLOUTS SEE DWG NO. 121339-01-000

FIRST USED

10 D-SERIES

DO NOT SCALE DRAWING

TITLE: LOAD CENTER/ATS ASM

SHEET 6 | PART NO 172034 | REV

2/25/2010

DRAWING NO.	FEATURE
172369-01	WIN
172369-02	ITA

RELEASE	REV	DATE	DWG NO
	A		172369

REV	ZONE	REVISION RECORD	DATE	DFTR-ORIG

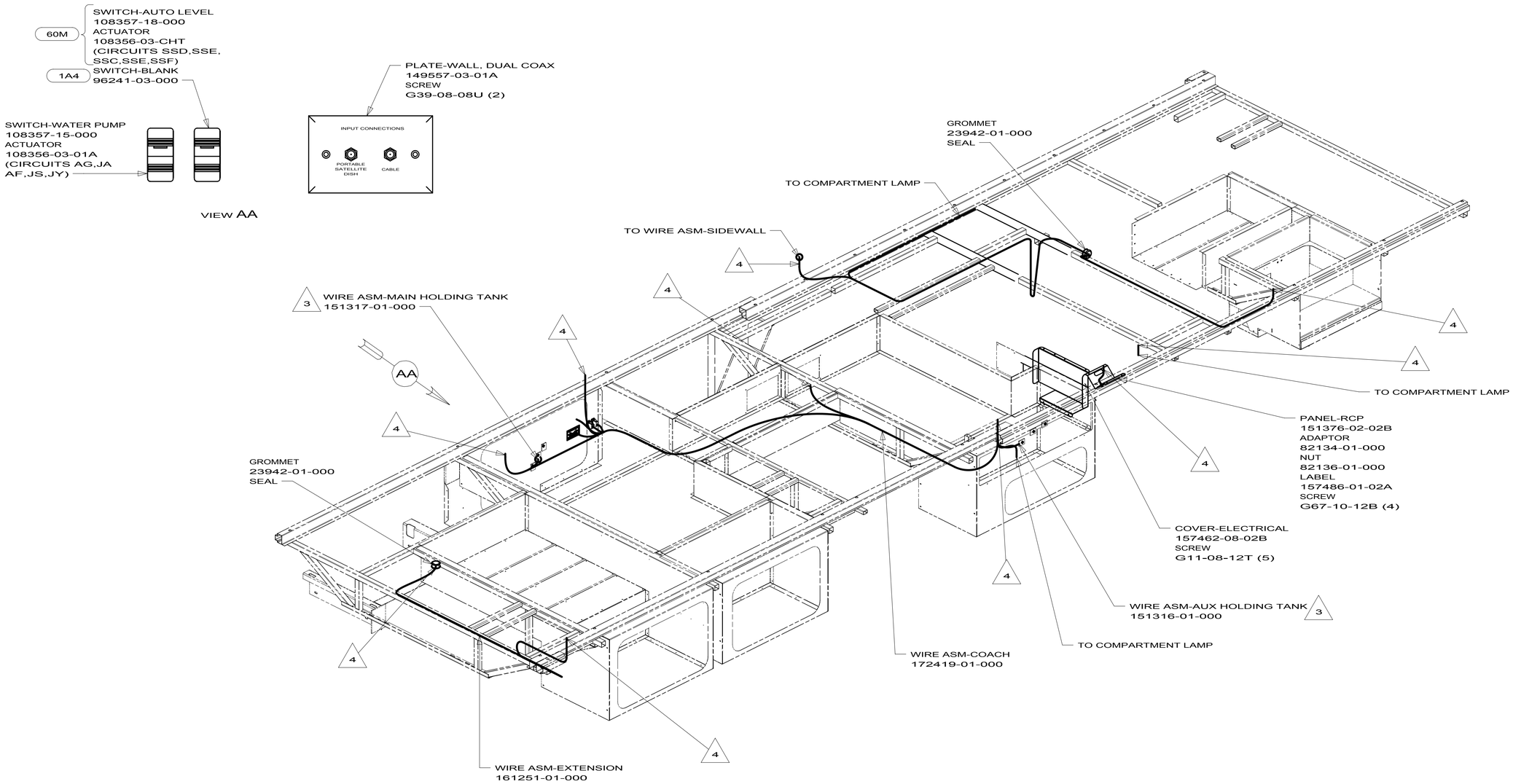

1A4	LEVELING JACK WITHOUT
60M	HYDRAULIC LEVEL JACKS-AUTO
WIN	WINNEBAGO ONLY
ITA	ITASCA ONLY
265	CODES/STANDARDS-CSA/CMVSS
1B1	CODES/STANDARDS USA

4 WIRE PASSES THROUGH FLOOR IN THIS AREA.

3 PLACE CROSS LOCATOR ON SENSOR OVER DIMPLES ON TANK.

2. ROUTE TANK SENSOR WIRES SO THEY DO NOT PASS OVER SENSORS. USE WIRE TIE MOUNT 155366-01-000 AND WIRE TIE 8343-01-000 AS NEEDED. TANK SURFACE MUST BE CLEANED USING ISOPROPYL ALCOHOL AND PRIMED WITH PRIMER 94.

1. ALL WIRES TO BESECURED WITH CLAMP10495 OR 10497 OR WIRE TIE 8343 OR 108046 EVERY EVERY 600mm, USE SCREW G67-XX-XXX OR G56-XX-XXX AS APPROPRIATE FOR INSTALLATION.

NOTES:

X-X

FOR ELECTRICAL CALLOUTS SEE DWG NO. 121339-01-000

FOR ELECTRICAL TORQUE SPECIFICATIONS SEE DWG NO. 128783-01-000

1B1 265

WINNEBAGO INDUSTRIES
COPYRIGHT 2010 WINNEBAGO INDUSTRIES, INC.

DFTR	ORIG. DATE
CHKR	ALL DIMENSIONS ARE IN MILLIMETERS
P.E.	
M.E.	FIRST USED 10 D35J
DSNR	

UNSPECIFIED TOLERANCES ARE:

WHOLE DIM (X)	:	3
ONE-PLACE (X.X)	:	1.5
TWO-PLACE (X.XX)	:	0.50
ANGLE	:	1°

MATERIAL:

THIRD ANGLE PROJECTION

DO NOT SCALE DRAWING

TITLE: WIRING INSTL-BODY,12V

SHEET 1 OF 8 | PART NO 172369 | REV

REF: 1

2/11/2010

DWG NO 172369

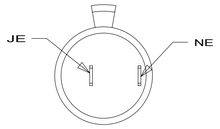

DETAIL BA

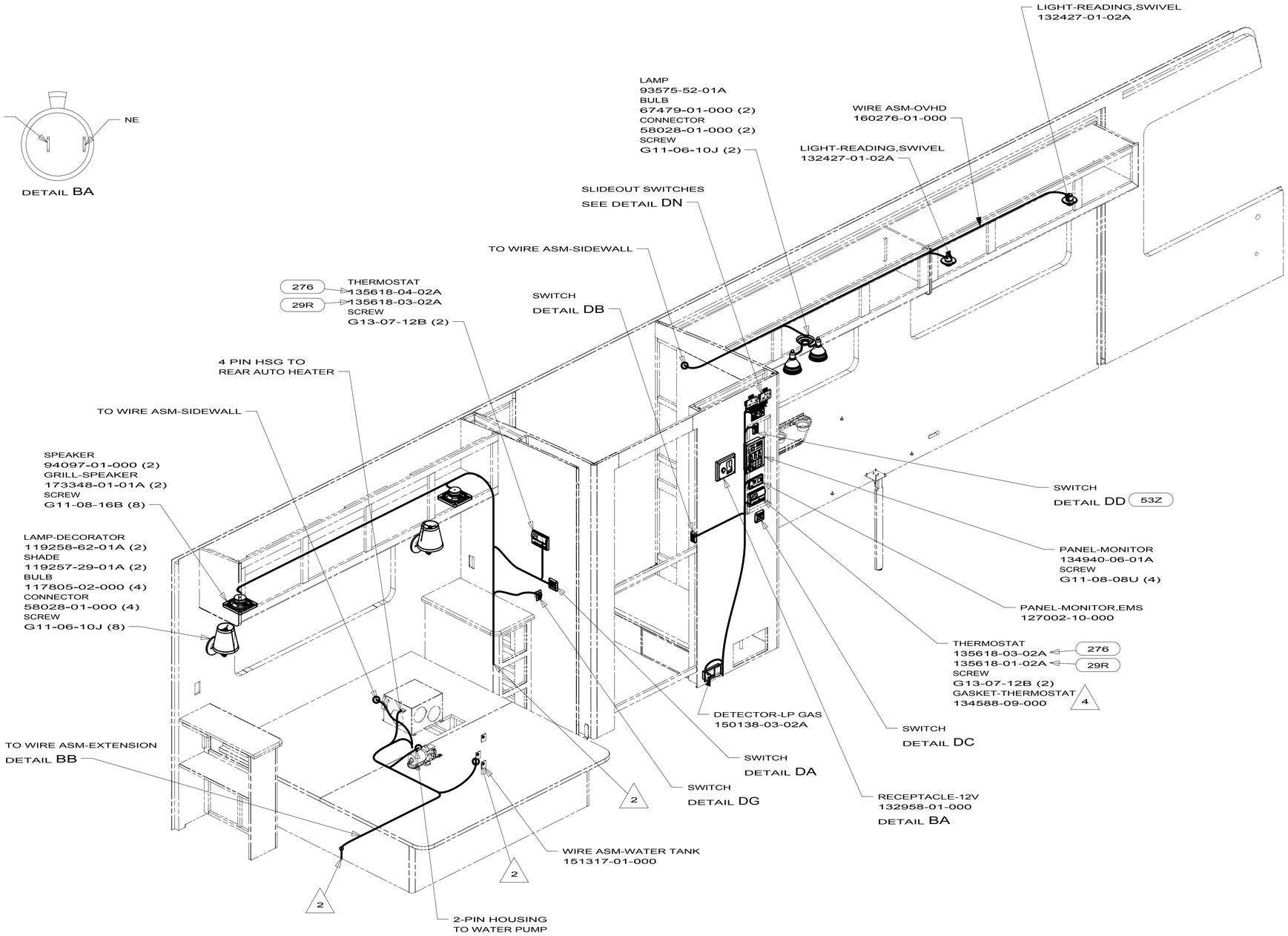

4 INSTALL GASKET ON BACK SIDE OF ONE PLACE AFTER INSTALLATION OF THERMOSTAT, MAKINF SURE THAT THE GASKET COVERS AND SEALS THE HOLE THAT THE WIRES PASS THROUGH.

3 CONNECT TELEPHONE WIRES TO MATCHING COLORS ON PLATE-WALL,TELEPHONE.

2 WIRE PASSES THROUGH FLOOR IN THIS AREA.

1. ALL WIRES TO BE SECURED WITH CLAMP 10495 OR 10497 OR WIRE TIE 8343 OR 108046 EVERY 600mm, USE SCREW G67-XX-XXX OR G56-XX-XXX AS APPROPRIATE FOR INSTALLATION.

NOTES:

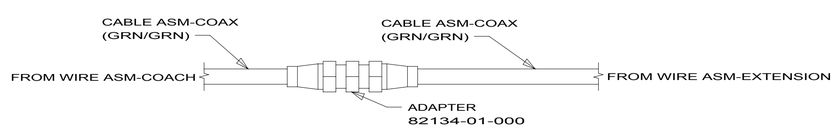

DETAIL BB

X-X

FOR ELECTRICAL CALLOUTS SEE DWG NO. 121339-01-000

FOR ELECTRICAL TORQUE SPECIFICATIONS SEE DWG NO. 128783-01-000

53Z	WTR HTR-6GAL/110/LP/MTR/AUTO
29R	AC HEAT PUMP-2 HI EFFICIENCY
276	A/C ROOF-HI EFF (2) W/EMS
WIN	WINNEBAGO ONLY
ITA	ITASCA ONLY
265	CODES/STANDARDS-CSA/CMVSS
1B1	CODES/STANDARDS USA

1B1 265

FIRST USED 10 D35J

DO NOT SCALE DRAWING

TITLE: WIRING INSTL-BODY,12V

SHEET 2 PART NO 172369 REV

2/11/2010

DWG NO 172369

LIGHT-READING,SWIVEL
132427-01-02A

3 PIN HSG
TO RANGE HOOD

53F 4 PIN HSG
TO WATER HEATER
WIRE ASM-JUMPER
142263-01-000

TO WIRE ASM-ROOF
DETAIL FC

HA

LIGHT-DOME,DBL,W/SW,OPTIC
170693-05-02A

LIGHT-OVAL,SGL,W/SW,OPTIC
170693-02-02A (UP TO 09-27-09)
LIGHT-OVAL,SGL,W/SW,FROSTED
170693-01-01A (AFTER 09-28-09)

WIRE ASM-
EXTENSION
147053-01-000

TO REFRIGERATOR

TV-8.5" FLIPDOWN
164136-01-000 (2)
SCREW
G11-08-16T (4) 7
G39-08-40T (4) 8
10C

CABLE-RCA 12'
136860-01-000
SEE DETAIL GA
FOR CONNETCTIONS
10C

GA

SWITCH
DETAIL DE

CB

40B 2-PIN HOUSING
FROM WIRE ASM-
CHASSIS TO INVERTER

SWITCH
DETAIL CA

TO WIRE ASM-CHASSIS

4

TO GROUND BAR

ISOLATED STUD
DETAIL CC

4

4 PIN HSG
TO FURNACE

CONVERTER
DETAIL CC

DK

4

EXT. ENT. CENTER
1D5 144818-07-000(UP TO 03-26-09)
173464-07-000(AFTER 03-27-09)

SWITCH
DETAIL DM

WALLPLATE,TV
76319-09-000 (2)

1JU PLATE-WALL,RCA
167733-01-01A
SCREW
G12-06-08U (2)

4 DETAIL FD

LAMP-WARDROBE
87694-01-000
SCREW
G11-10-12U (2)
CONNECTOR
58028-01-000 (2)

SWITCH
56264-01-000 (2)
SCREW
G11-06-16U (4)

WALLPLATE,TV
76319-09-000 5

LIGHT-READING,SWIVEL W/O SW
149590-01-02A(UP TO 09-27-09)
BULB
123917-01-000(UP TO 09-27-09)
CONNECTOR
58028-01-000 (2)
LIGHT-READING,LED
174815-01-01A(AFTER 09-28-09)

SWITCH
DETAIL DP

WIRE ASM-SLIDEOUT
165912-01-000

SWITCH
DETAIL DF

SPEAKER-SUB
124884-01-000
GRILL-SPEAKER
151844-01-01a
SCREW
G11-08-12U (4)

SWITCH
DETAIL DH

DETAIL CB

SWITCH BATTERY
CONTORL CENTER
173334-02-000(AFTER 05-13-09)
SWITCH-BEZEL
173334-03-000(AFTER 05-13-09)
SCREW
000G13-06-08I(4)(AFTER 05-13-09)

LIGHT-12V, RECT AISLE, 1P
061424-01-000

CONVERTER - 55 AMP
172246-01-000
SCREW
G51-10-12B (4)

TO WIRE ASM-COACH

TO WIRE ASM-CHASSIS

J

M

STUD-ISOLATED
86233-01-000
NUT
D34-06-00B
SCREW
G67-10-12B (2)
BOOT
77479-02-000

U

L

K

TO GROUND BAR

DETAIL CC

ROUTE WIRES
THRU HOLE

JAMB-DOOR

GROMMET
8386-01-000

SWITCH/MAGNET-
STEP,ELECTRIC
116995-02-000 27G OR 92K OR 26F OR 26H
116995-03-000 27A OR 92A OR 24C
SCREW
G11-06-08B (4)

3

2

DETAIL CA

8 TO BE USED FOR TOP BUNK TV.

7 TO BE USED FOR BOTTOM BUNK TV.

6 NOT USED WITH 10C

5 NOT USED WITH 1JU

4 WIRE PASSES THROUGH FLOOR IN THIS AREA.

3 MOUNT MAGNET USING PILOT HOLES IN SCREEN DOOR FRAME, MOUNT WITH MAGNET TOWARD SWITCH.

2 MOUNT SWITCH AND SPACER TO BLOCK ON JAMB, ADJUST HEIGHT TO MATCH MAGNET.

1. ALL WIRES TO BE SECURED WITH CLAMP 10495 OR 10497 OR WIRE TIE 8343 OR 108046 EVERY 600mm, USE SCREW G67-XX-XXX OR G56-XX-XXX AS APPROPRIATE FOR INSTALLATION.

NOTES:

X-X FOR ELECTRICAL CALLOUTS SEE DWG NO. 121339-01-000

FOR ELECTRICAL TORQUE SPECIFICATIONS SEE DWG NO. 128783-01-000

92K EXTERIOR GRAPHICS PACKAGE #2
92A EXT FULL BODY PAINT PKG # 2
53F WATER HEATER-ELEC. IGNITION
40B INVERTER-DC/AC, 300 WATT
27G EXTERIOR GRAPHICS PACKAGE #1
27A EXT FULL BODY PAINT PKG #1
26H EXT GRAPHIC/PAINT-DLX PKG 2
26F EXT GRAPHIC/PAINT DLX PKG 1
24C EXT FULL BODY PAINT PKG # 3
10C DVD PLAYER W/7" MONITOR
1JU TV (REAR)-19"COLOR, STEREO
1D5 ENTERTAINMENT CENTR/EXT W/CD
265 CODES/STANDARDS-CSA/CMVSS
1B1 CODES/STANDARDS USA

1B1 265

FIRST USED
10 D35J

DO NOT SCALE DRAWING

TITLE:
WIRING INSTL-BODY,12V

SHEET 3 | PART NO 172369 | REV

2/11/2010

UP TO 05-12-09

DWG NO 172369

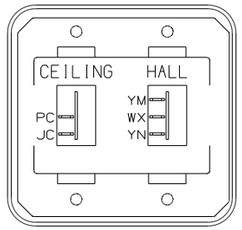

SWITCH-ROCKER
135740-01-CHT
135740-02-CHT
SWITCH-BASE
135741-02-CHT
SWITCH-BEZEL
135742-16-CHT
SCREW
G11-08-08U (4)

DETAIL DA

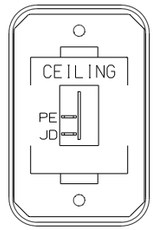

SWITCH-ROCKER
135740-01-CHT
SWITCH-BASE
135741-01-CHT
SWITCH-BEZEL
135742-07-CHT
SCREW
G11-08-08U (2)

DETAIL DB

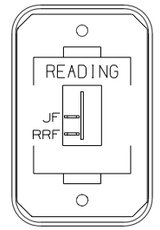

SWITCH-ROCKER
135740-01-CHT
SWITCH-BASE
135741-01-CHT
SWITCH-BEZEL
135742-51-CHT
SCREW
G11-08-08U (2)

DETAIL DP

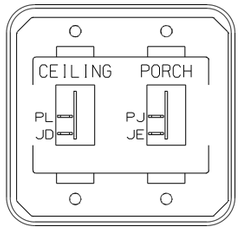

SWITCH-ROCKER
135740-01-CHT (2)
SWITCH-BASE
135741-02-CHT
SWITCH-BEZEL
135742-19-CHT
SCREW
G11-08-08U (4)

DETAIL DF

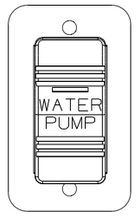

SWITCH-PUMP
108357-15-000
ACTUATOR
108356-23-CHT
PLATE
98351-07-CHT
SCREW
G11-06-10U (2)

DETAIL DG

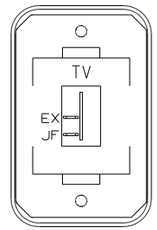

SWITCH-ROCKER
135740-01-CHT
SWITCH-BASE
135741-01-CHT
SWITCH-BEZEL
135742-45-CHT
SCREW
G11-08-08U (2)

DETAIL DM

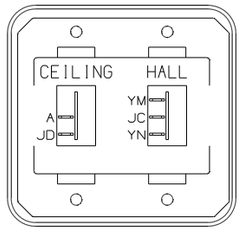

SWITCH-ROCKER
135740-01-CHT
135740-02-CHT
SWITCH-BASE
135741-02-CHT
SWITCH-BEZEL
135742-16-CHT
SCREW
G11-08-08U (4)

DETAIL DC

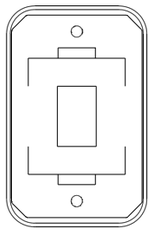

SWITCH-BLANK
138253-01-CHT
SWITCH-BASE
135741-01-CHT
SWITCH-BEZEL
135742-01-CHT
SCREW
G11-08-08U (2)

DETAIL DD (53F)

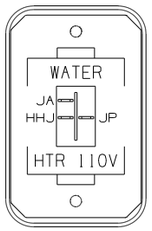

SWITCH-ROCKER
135740-06-CHT
SWITCH-BASE
135741-01-CHT
SWITCH-BEZEL
135742-35-CHT
SCREW
G11-08-08U (2)

DETAIL DD (53Z)

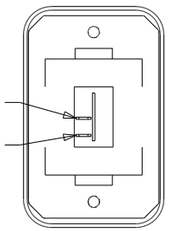

SWITCH-ROCKER
135740-01-CHT
SWITCH-BASE
135741-01-CHT
SWITCH-BEZEL
135742-01-CHT
SCREW
G11-08-08U (2)

DETAIL DE

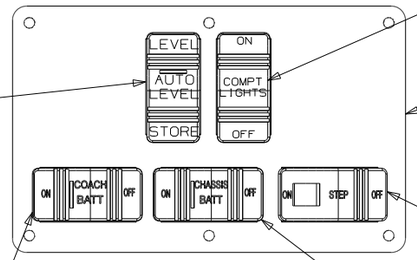

60M — SWITCH-AUTO LEVEL
108357-18-000
ACTUATOR-SWITCH
108356-15-CHT
CIRCUITS SSD,SSE
,SSC,SSE,SSF

1A4 — SWITCH-BLANK
96241-03-000

SWITCH-COMT LIGHTS
108357-01-000
ACTUATOR-SWITCH
108356-14-CHT
CIRCUITS WC,WA

PLATE-SWITCH
158431-04-CHT
SCREW
G11-06-10U (6)

SWITCH-STEP
108357-19-000
CIRCUITS ER,ES

SWITCH-COACH BATT
108357-17-000
ACTUATOR-SWITCH
108356-19-CHT
CIRCUITS KF,LG,
LJ,LJ,LH,KF,KF,LK

SWITCH-CHASSIS BATTERY
108357-17-000
ACTUATOR-SWITCH
108356-20-CHT
CIRCUITS UUC,TTY,UUB
,UUB,TTZ,UUC,UUC,UUA

DETAIL DH (1)

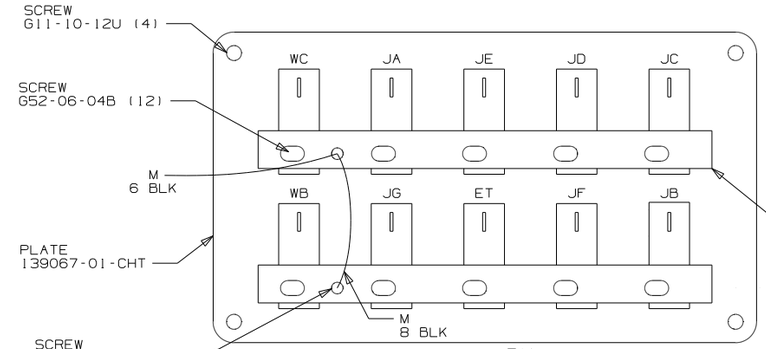

SCREW
G11-10-12U (4)

SCREW
G52-06-04B (12)

M
6 BLK

PLATE
139067-01-CHT

SCREW
G39-08-06B (2)

M
8 BLK

BUSS BAR
92786-03-000 (2)

DETAIL DK
(BACK VIEW)

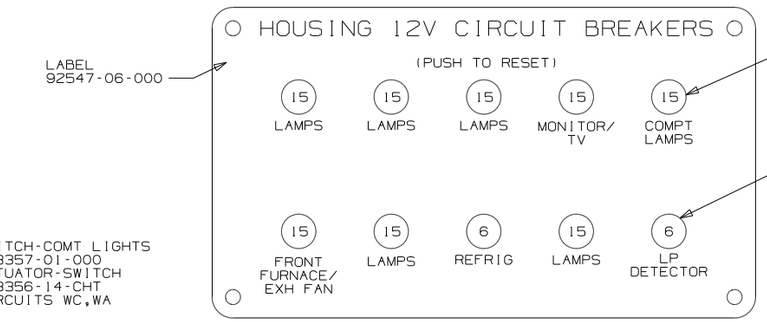

LABEL
92547-06-000

CIRCUIT BREAKER
93654-02-000 (8)

CIRCUIT BREAKER
93654-01-000 (2)

DETAIL DK
(FRONT VIEW)

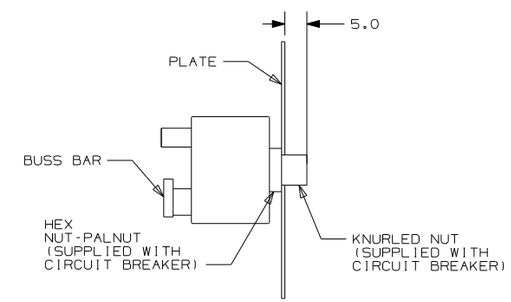

DETAIL DL

SWITCH,SLIDEOUT
171341-01-000
SCREW
76790-05-000 (2)
(CONNECT TO 12-PIN
HOUSING WITH CIRCUITS
WWE,MMB,MMD,MMA,MMC,
LLZ,WWG,WWF.)

LABEL-SLIDEOUT,PASS,REAR
163992-03-CHT

PASSENGER'S SIDE REAR

LABEL-SLIDEOUT,DRIVER,FRONT
163992-01-CHT

DRIVER'S SIDE FRONT

SLIDEOUT-ELEC,FRONT
171341-01-000
SCREW
76790-05-000 (2)
(CONNECTS TO 12-PIN HOUSING
WITH CIRCUITS VVJ,GGE,GGF,
GGD,DR,DU,VVP,VVN.)

CONNECT TO 6-PIN
HOUSING WITH CIRCUITS
LLY,LLZ,MMA,MMB,MMC,MMD.

WARNING — CRUSH HAZARD. Keep people and objects clear of the inside and the outside of the slideout room when operating. Failure to comply could result in death or serious injury.

LABEL-WARNING, SLIDEOUT
116549-01-000

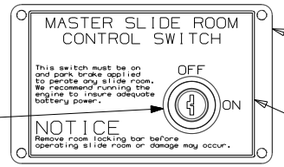

PLATE-KEY, SLIDE ROOM
163987-01-CHT
SCREW
76790-05-000 (4)

SWITCH-KEY,SPST-ILLINOIS LCK
163097-01-000
(CONNECTS TO CIRCUITS DY & DDJ)

LABEL-SLIDROOM CONTROL, MAN
163988-01-CHT

DETAIL DN

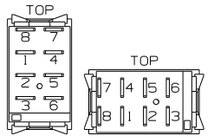

DETAIL DJ

60M	HYDRAULIC LEVEL JACKS-AUTO
53Z	WTR HTR-6GAL/110/LP/MTR/AUTO
53F	WATER HEATER-ELEC. IGNITION
1A4	LEVELING JACK WITHOUT
10C	DVD PLAYER W/7" MONITOR
265	CODES/STANDARDS-CSA/CMVSS
1B1	CODES/STANDARDS USA

(1) FOR SWITCH ORIENTATION SEE DETAIL DJ

NOTES:

FOR ELECTRICAL TORQUE SPECIFICATIONS SEE DWG NO. 128783-01-000

(X-X) FOR ELECTRICAL CALLOUTS SEE DWG NO. 121339-01-000

(1B1) (265)

FIRST USED: 10 D35J

DO NOT SCALE DRAWING

TITLE: WIRING INSTL-BODY,12V

SHEET 4A | PART NO 172369 | REV

4/21/2009

AFTER 05-13-09

DWG NO 172369

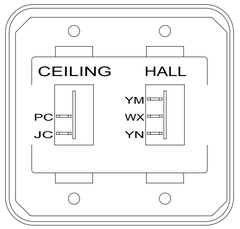

SWITCH-ROCKER
135740-01-01A
135740-02-01A
SWITCH-BASE
135741-02-01A
SWITCH-BEZEL
135742-16-02A
SCREW
G11-08-08U (4)

DETAIL DA

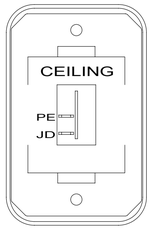

SWITCH-ROCKER
135740-01-01A
SWITCH-BASE
135741-01-01A
SWITCH-BEZEL
135742-07-02A
SCREW
G11-08-08U (2)

DETAIL DB

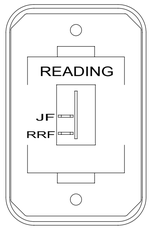

SWITCH-ROCKER
135740-01-01A
SWITCH-BASE
135741-01-01A
SWITCH-BEZEL
135742-51-02A
SCREW
G11-08-08U (2)

DETAIL DP

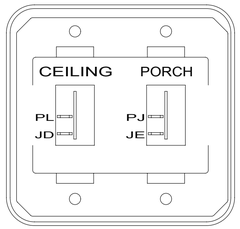

SWITCH-ROCKER
135740-01-01A (2)
SWITCH-BASE
135741-02-01A
SWITCH-BEZEL
135742-19-02A
SCREW
G11-08-08U (4)

DETAIL DF

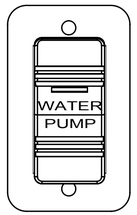

SWITCH-PUMP
108357-15-000
ACTUATOR
108356-23-01A
PLATE
98351-07-02A
SCREW
G11-06-10U (2)

DETAIL DG

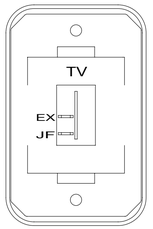

SWITCH-ROCKER
135740-01-01A
SWITCH-BASE
135741-01-01A
SWITCH-BEZEL
135742-45-02A
SCREW
G11-08-08U (2)

DETAIL DM

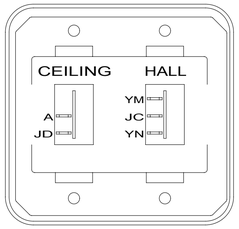

SWITCH-ROCKER
135740-01-CHT
135740-02-CHT
SWITCH-BASE
135741-02-CHT
SWITCH-BEZEL
135742-16-CHT
SCREW
G11-08-08U (4)

DETAIL DC

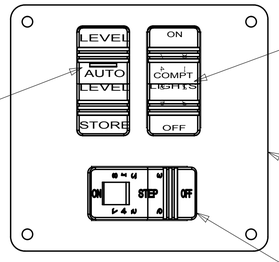

60M
1A4

SWITCH-AUTO LEVEL
108357-18-000
ACTUATOR-SWITCH
108356-15-01A
CIRCUITS SSD,SSE
,SSC,SSE,SSF
SWITCH-BLANK
96241-03-000

SWITCH-COMT LIGHTS
108357-01-000
ACTUATOR-SWITCH
108356-14-01A
CIRCUITS WC,WA

PLATE-SWITCH
158431-04-04B
SCREW
G11-06-10U (6)

SWITCH-STEP
108357-19-000
CIRCUITS ER,ES

DETAIL DH 1

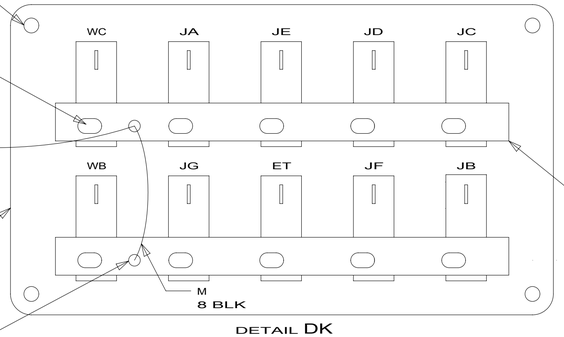

SCREW
G11-10-12U (4)

SCREW
G52-06-04B (12)

M
6 BLK

PLATE
139067-01-02B

SCREW
G39-08-06B (2)

DL

DL

BUSS BAR
92786-03-000 (2)

DETAIL DK
(BACK VIEW)

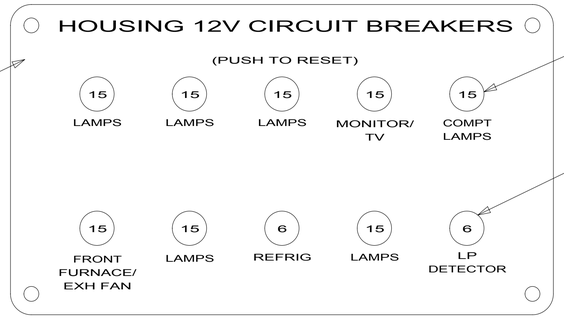

LABEL
92547-06-000

CIRCUIT BREAKER
93654-02-000 (8)

CIRCUIT BREAKER
93654-01-000 (2)

DETAIL DK
(FRONT VIEW)

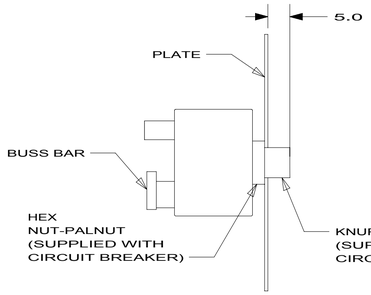

DETAIL DL

SWITCH-BLANK
138253-01-02A
SWITCH-BASE
135741-01-01A
SWITCH-BEZEL
135742-01-01A
SCREW
G11-08-08U (2)

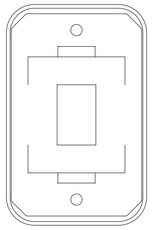

DETAIL DD 53F

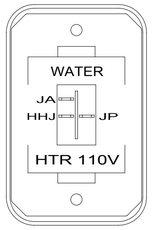

SWITCH-ROCKER
135740-06-01A
SWITCH-BASE
135741-01-01A
SWITCH-BEZEL
135742-35-02A
SCREW
G11-08-08U (2)

DETAIL DD 53Z

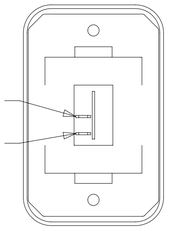

SWITCH-ROCKER
135740-01-01A
SWITCH-BASE
135741-01-01A
SWITCH-BEZEL
135742-01-01A
SCREW
G11-08-08U (2)

DETAIL DE

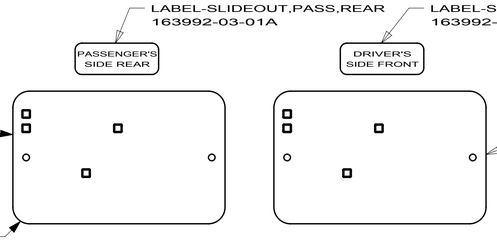

LABEL-SLIDEOUT,PASS,REAR
163992-03-01A

LABEL-SLIDEOUT,DRIVER,FRONT
163992-01-01A

SWITCH,SLIDEOUT
171341-01-000
SCREW
76790-05-000 (2)
(CONNECT TO 12-PIN
HOUSING WITH CIRCUITS
WWE,MMB,MMD,MMA,MMC,
LLZ,WWG,WWF.)

CONNECT TO 6-PIN
HOUSING WITH CIRCUITS
LLY,LLZ,MMA,MMB,MMC,MMD.

SLIDEOUT-ELEC,FRONT
171341-01-000
SCREW
76790-05-000 (2)
(CONNECTS TO 12-PIN HOUSING
WITH CIRCUITS VVJ,GGE,GGF,
GGD,DR,DU,VVP,VVN.)

WARNING CRUSH HAZARD. Keep people and objects clear of the inside and the outside of the slideout room when operating. Failure to comply could result in death or serious injury.

LABEL-WARNING, SLIDEOUT
116549-01-000

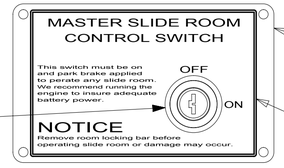

PLATE-KEY, SLIDE ROOM
163987-01-02B
SCREW
76790-05-000 (4)

SWITCH-KEY,SPST-ILLINOIS LCK
163097-01-000
(CONNECTS TO CIRCUITS DY & DDJ)

LABEL-SLIDROOM CONTROL, MAN
163988-01-01A

DETAIL DN

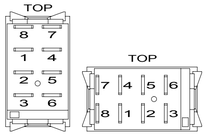

DETAIL DJ

60M	HYDRAULIC LEVEL JACKS-AUTO
53Z	WTR HTR-6GAL/110/LP/MTR/AUTO
53F	WATER HEATER-ELEC. IGNITION
1A4	LEVELING JACK WITHOUT
10C	DVD PLAYER W/7" MONITOR
265	CODES/STANDARDS-CSA/CMVSS
1B1	CODES/STANDARDS USA

1 FOR SWITCH ORIENTATION SEE DETAIL DJ

NOTES:

FOR ELECTRICAL TORQUE SPECIFICATIONS SEE DWG NO. 128783-01-000

X-X FOR ELECTRICAL CALLOUTS SEE DWG NO. 121339-01-000

1B1 265

FIRST USED 10 D35J

DO NOT SCALE DRAWING

TITLE: WIRING INSTL-BODY,12V

SHEET 4B PART NO 172369 REV

2/11/2010

DWG NO 172369

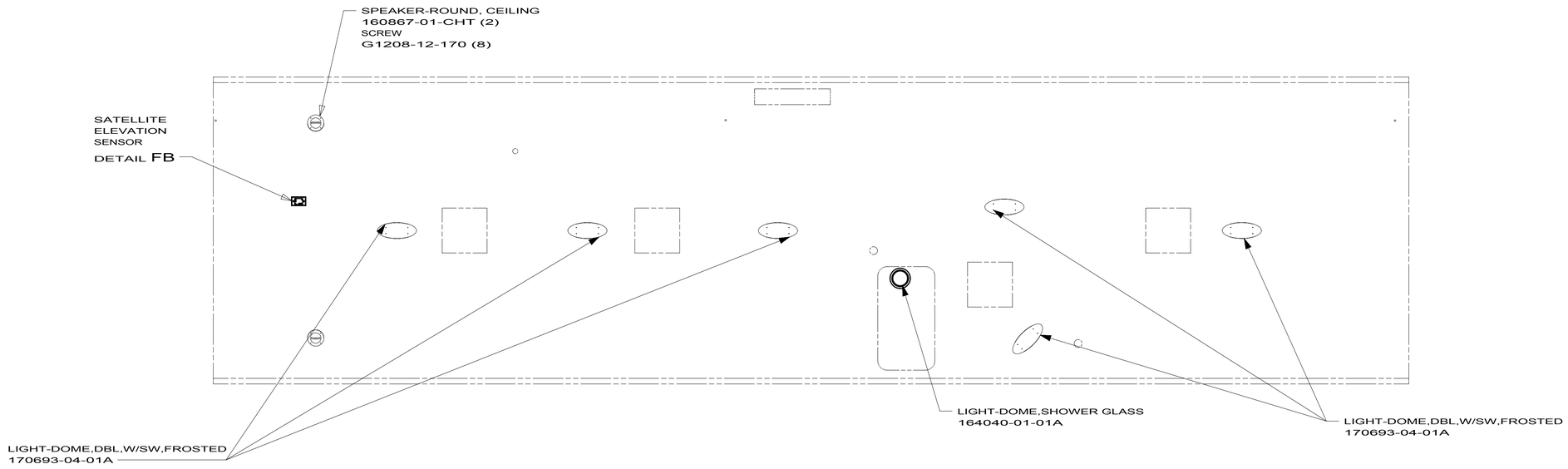

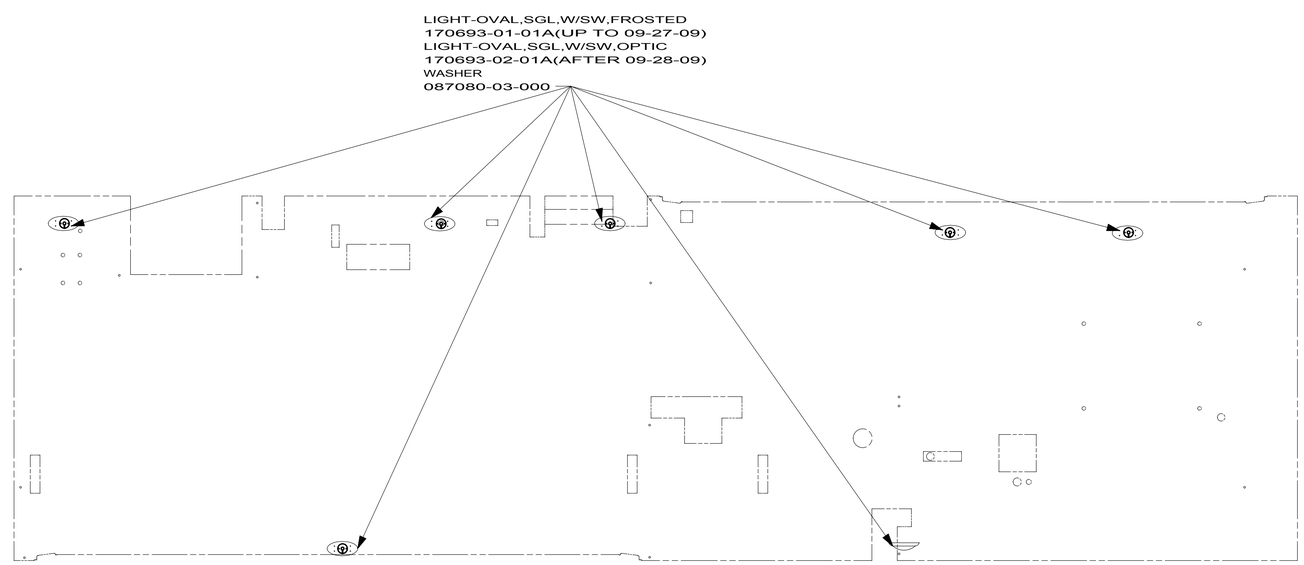

X-X

FOR ELECTRICAL CALLOUTS SEE DWG NO. 121339-01-000

FOR ELECTRICAL TORQUE SPECIFICATIONS SEE DWG NO. 128783-01-000

265 CODES/STANDARDS-CSA/CMVSS

1B1 CODES/STANDARDS USA

1B1 265

FIRST USED 10 D35J

DO NOT SCALE DRAWING

TITLE: WIRING INSTL-BODY,12V

SHEET 5 | PART NO 172369 | REV

2/11/2010

DWG NO 172369

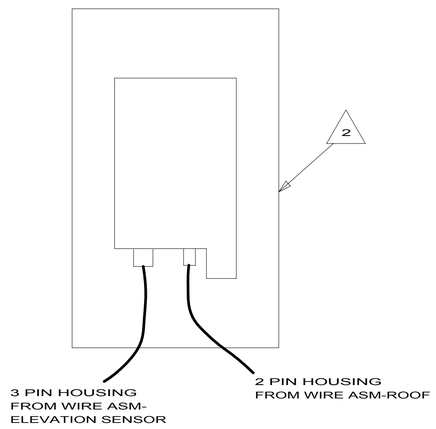

DETAIL FB

VIEW FA

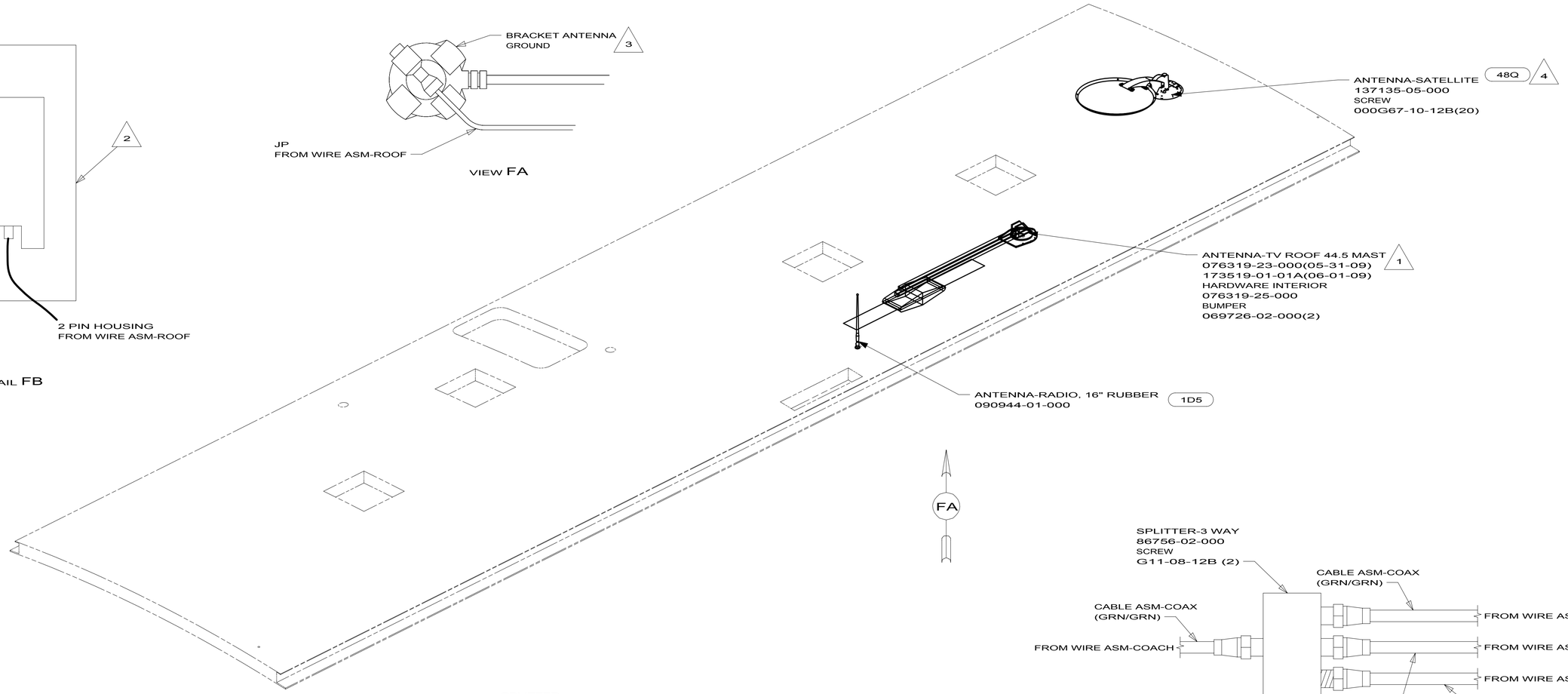

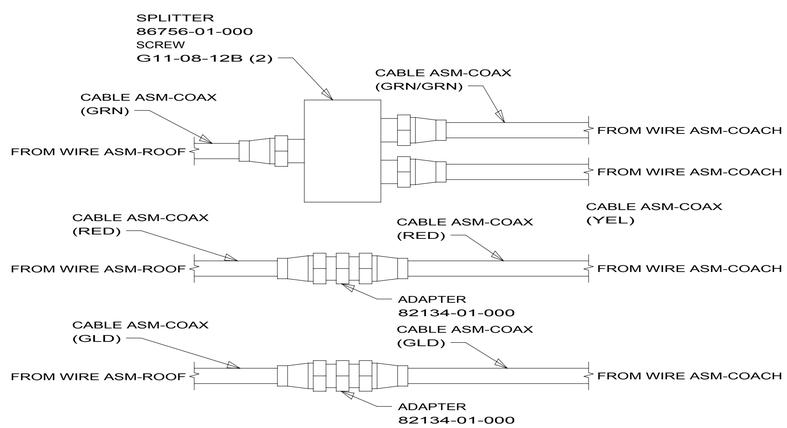

DETAIL FC

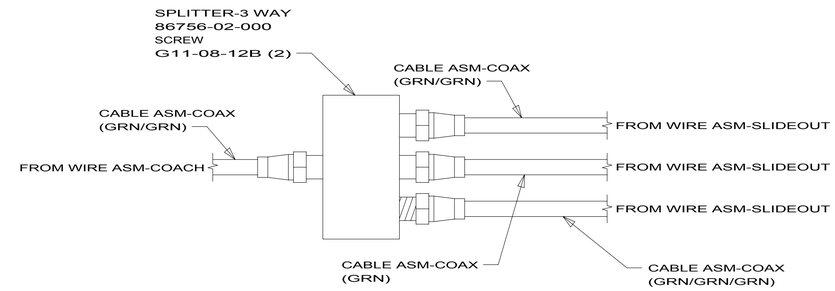

DETAIL FD

NOTES:

4 CONNECT THE ORANGE COAX FROM ROOF ASM TO ONE OF THE 2 GRAY COAX CABLES ON THE SATELLITE DISH, THE OTHER GRAY COAX IS NOT USED.

3 WRAP LEGS AROUND ANTENNA BASE.

2 SENSOR SUPPLIED WITH SATELLITE ASSEMBLY.

1 SEE DWG 76319-01-000 FOR INSTALLATION INSTRUCTIONS.

X-X

FOR ELECTRICAL CALLOUTS SEE DWG NO. 121339-01-000

FOR ELECTRICAL TORQUE SPECIFICATIONS SEE DWG NO. 128783-01-000

48Q	SATELLITE DISH & ELEV.SENSOR
1D5	ENTERTAINMENT CENTR/EXT W/CD
265	CODES/STANDARDS-CSA/CMVSS
1B1	CODES/STANDARDS USA

1B1 265

FIRST USED 10 D35J

DO NOT SCALE DRAWING

TITLE: WIRING INSTL-BODY,12V

SHEET 6 PART NO 172369 REV

2/11/2010

DWG NO 172369

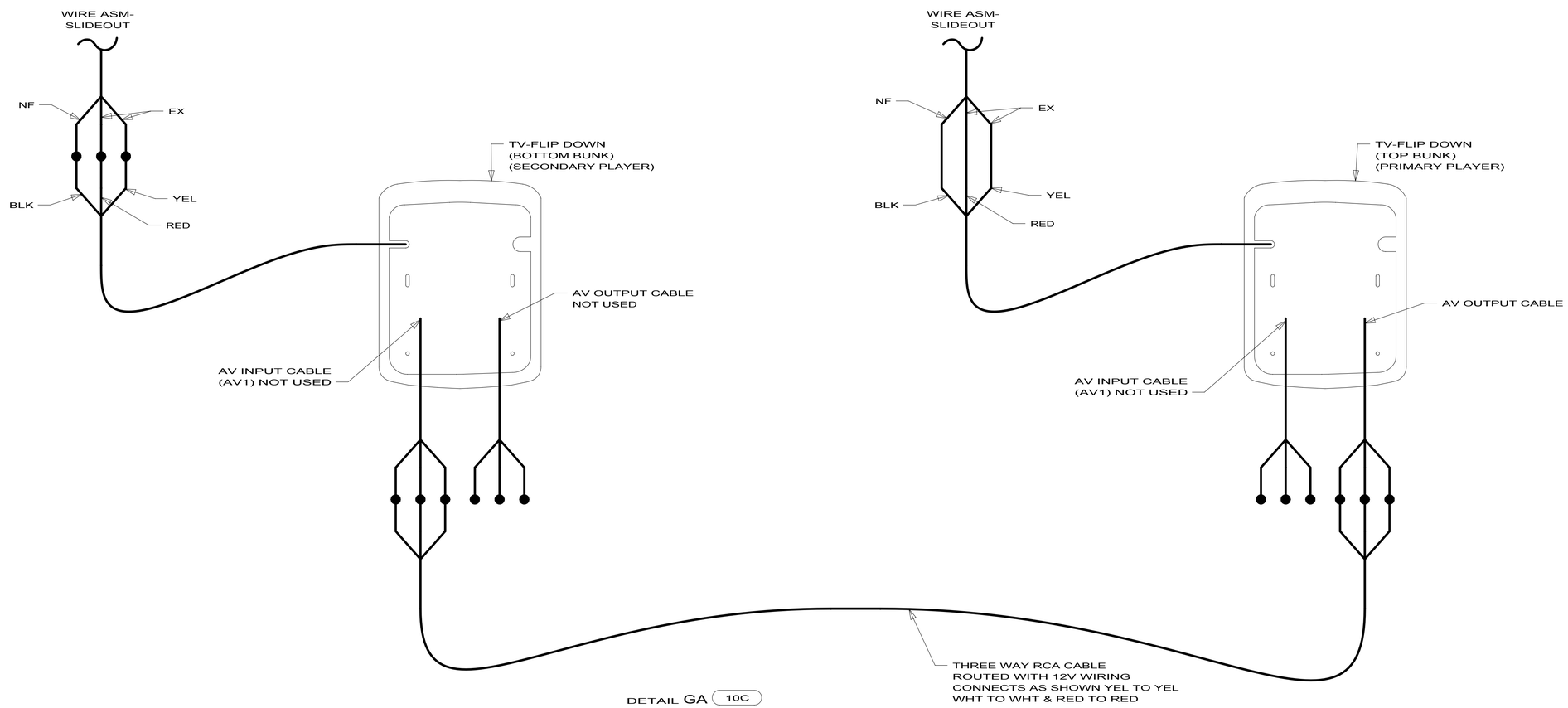

DETAIL GA 10C

NOTES:

6 SUPPLIED WITH FLIP DOWN TV.

5 REMOVE SHIPPING RESTRAINT SCREWS FROM DVD PLAYER.

4 SUPPLIED WITH DVD PLAYER.

3 REMOTE IR RECEIVER SUPPLIED WITH DVD PLAYER. TO BE MOUNTED IN BOTTOM BUNK.

2 RCA A/V CABLE SUPPLIED WITH DVD PLAYER

1 COAX IS PART OF WIRE-ASM SLIDEOUT

10C DVD PLAYER W/7" MONITOR

265 CODES/STANDARDS-CSA/CMVSS

1B1 CODES/STANDARDS USA

X-X FOR ELECTRICAL CALLOUTS SEE DWG NO. 121339-01-000

1B1 265

FIRST USED 10 D35J

DO NOT SCALE DRAWING

TITLE: WIRING INSTL-BODY,12V

SHEET 7 PART NO 172369 REV

2/11/2010

DWG NO 172369

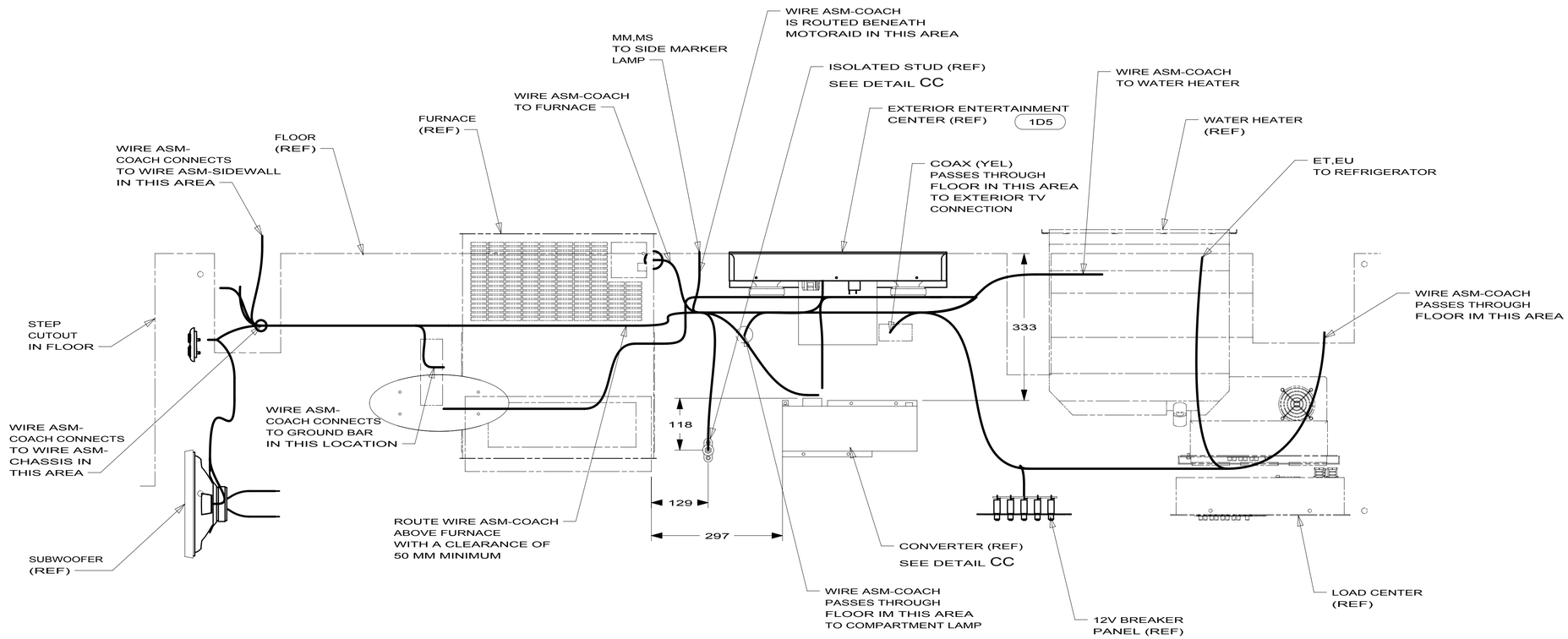

VIEW HA
(REF)

1D5 ENTERTAINMENT CENTR/EXT W/CD

265 CODES/STANDARDS-CSA/CMVSS

1B1 CODES/STANDARDS USA

1B1 265

1. ALL WIRES TO BE SECURED WITH CLAMP 10495 OR 10497 OR WIRE TIE 8343 OR 104046 EVERY 600MM, USE SCREW G64-XX-XXX OR G56-XX-XXX AS APPROPRIATE FOR INSTALLATION.

NOTES:

FOR ELECTRICAL TORQUE SPECIFICATIONS SEE DWG NO. 128783-01-000

X-X FOR ELECTRICAL CALLOUTS SEE DWG NO. 121339-01-000

FIRST USED 10 D35J

DO NOT SCALE DRAWING

TITLE: WIRING INSTL-BODY,12V

SHEET 8 | PART NO 172369 | REV

2/11/2010

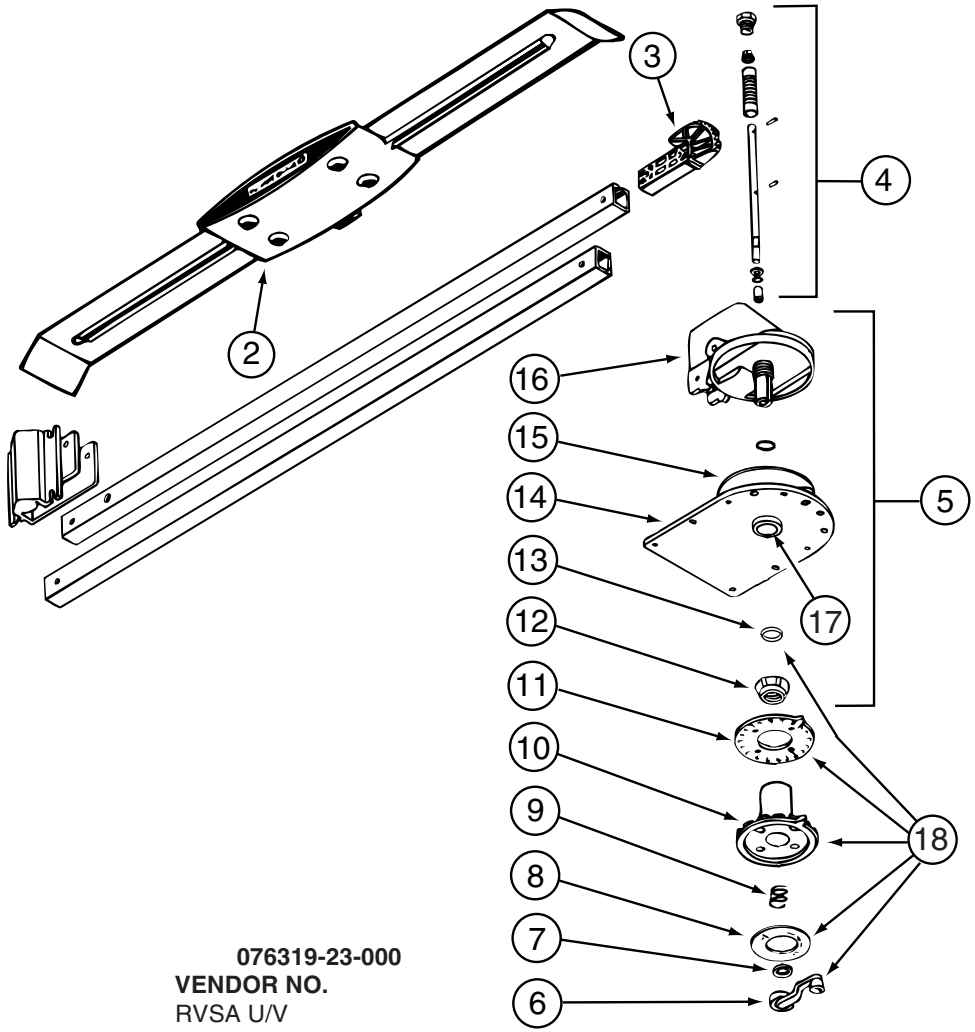

076319-23-000

KEY	PART NUMBER	U/M	DESCRIPTION	VENDOR NO.
2	076319-01-700	EA	HEAD-ANTENNA, AMPLIFIED	RVSA U/V
3	076319-01-701	EA	GEAR-ELEVATING, PLASTIC	2200046
4	076319-01-702	EA	SHAFT ASM-ELEVATING	RP-4000
5	076319-01-711	EA	BASE & LIFT ASM	2762802
7	076319-01-705	EA	GROMMET-NYLON, 7/8"ID	3200658
8	076319-01-708	EA	DECAL-CRANK	5413002
9	076319-01-707	EA	SPRING-HANDLE	2160822
11	076319-01-712	EA	PLATE - CEILING	3200608
12	076319-01-715	EA	NUT (GEAR HOUSING)	2200047
14	076319-01-713	EA	PLATE-BASE, STEEL	3100523
15	076319-01-703	EA	BEARING-NYLON, 5"OD	3200656
16	076319-01-714	EA	HOUSING, ROTATING GEAR	2200049
17	076319-01-704	EA	BEARING-NYLON, 1.25"OD	3200657
18	076319-01-709	EA	HANDLE-HEAD DIRECTIONAL	200644
	076319-01-716	EA	TUBING, ELEVATING	RP-2900

CONTACT WINNEBAGO PART SALES FOR UNLISTED COMPONENT(S)

COPYRIGHT © 2009 WINNEBAGO INDUSTRIES INC.

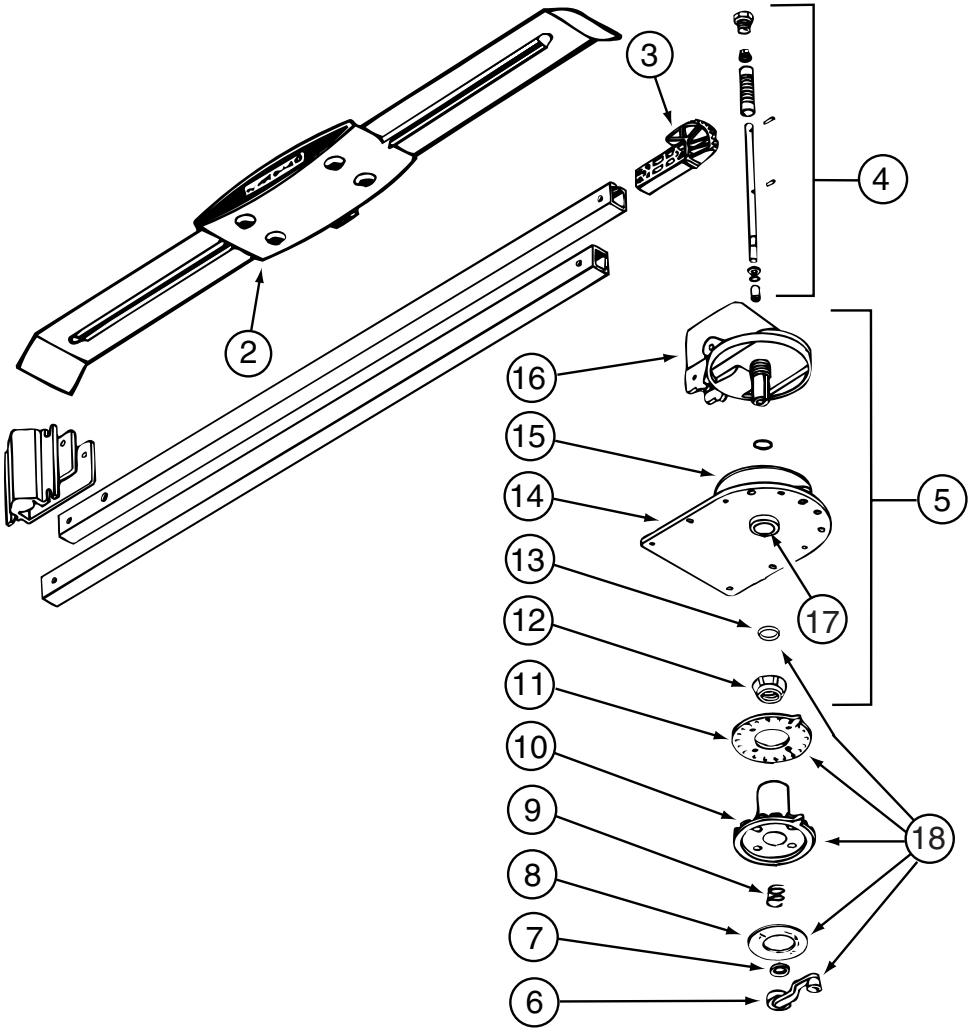

076319-25-000

KEY	PART NUMBER	U/M	DESCRIPTION	VENDOR NO.
6	076319-01-706	EA	CRANK-W/SET SCREW UNIV/BEIGE	2750897
6	120233-01-710	EA	HANDLE-CRANK W/SCREW - WHITE	RP-6795
8	076319-01-708	EA	DECAL-CRANK	5413002
10	076319-25-700	EA	DIRECTIONAL HANDLE(WHITE)	3200612
11	076319-25-701	EA	PLATE - CEILING(WHITE)	3200609
13	120233-01-709	EA	WASHER-NYLON	RP-2658

CONTACT WINNEBAGO PART SALES FOR UNLISTED COMPONENT(S)

COPYRIGHT © 2009 WINNEBAGO INDUSTRIES INC.

087694-01-000

KEY	PART NUMBER	U/M	DESCRIPTION	VENDOR NO.
	087694-01-700	EA	BULB	GE561

COPYRIGHT © 2009 WINNEBAGO INDUSTRIES INC.

093575-46-01A

KEY	PART NUMBER	U/M	DESCRIPTION	VENDOR NO.
	093575-46-700	EA	GLOBE	98
	093575-46-701	EA	NUT-PLAS. LOCKING	39155

093575-47-01A

KEY	PART NUMBER	U/M	DESCRIPTION	VENDOR NO.
	093575-47-700	EA	GLOBE - GLASS	114-GLASS

093575-52-01A

KEY	PART NUMBER	U/M	DESCRIPTION	VENDOR NO.
	093575-52-700	EA	SHADE-FABRIC	H3015

COPYRIGHT © 2009 WINNEBAGO INDUSTRIES INC.

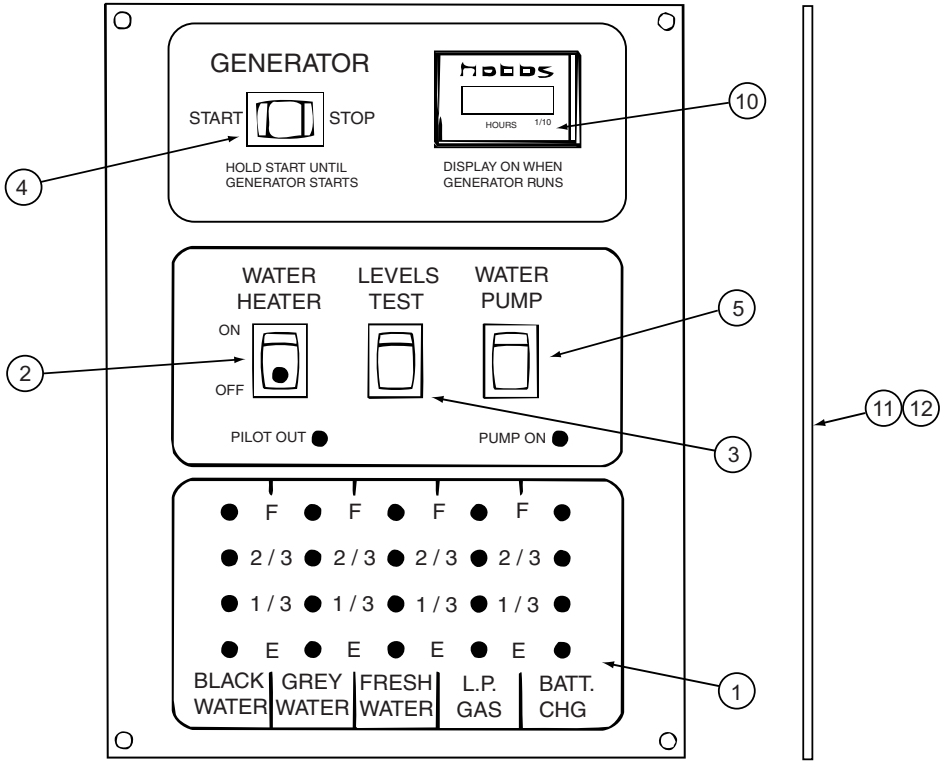

134940-06-01A

KEY	PART NUMBER	U/M	DESCRIPTION	VENDOR NO.
1	134940-01-702	EA	CHASSIS - SILKSCREENED	CC0558-00
2	134940-01-701	EA	SWITCH-SPST/ON-OFF/BLK W/LGT	L0109
3	096983-01-701	EA	SWITCH - SPST/MOM 2 TERMINAL	L0111-00
4	096983-01-702	EA	SWITCH - MOM/OFF/MOM/3 TERM	L0112-00
5	096983-01-703	EA	SWITCH - ON/ON	L0115-00
10	100258-10-701	EA	GAUGE-HR METER ONLY (LCD)	L0775-00
11	134940-06-700	EA	PC BOARD - SENSOR SYSTEM/RED	L5131-02
			CONTACT WINNEBAGO PART SALES FOR UNLISTED COMPONENT(S)	

134940-07-01A

KEY	PART NUMBER	U/M	DESCRIPTION	VENDOR NO.
1	134940-01-702	EA	CHASSIS - SILKSCREENED	CC0558-00
2	134940-01-701	EA	SWITCH-SPST/ON-OFF/BLK W/LGT	L0109
3	096983-01-701	EA	SWITCH - SPST/MOM 2 TERMINAL	L0111-00
4	096983-01-703	EA	SWITCH - ON/ON	L0115-00
5	134940-02-700	EA	SWITCH - DUMMY	L0118
11	134940-06-700	EA	PC BOARD - SENSOR SYSTEM/RED	L5131-02
			CONTACT WINNEBAGO PART SALES FOR UNLISTED COMPONENT(S)	

COPYRIGHT © 2009 WINNEBAGO INDUSTRIES INC.

134940-08-01A

KEY	PART NUMBER	U/M	DESCRIPTION	VENDOR NO.
1	134940-04-700	EA	CHASSIS - SILKSCREENED	CE0136-00
2	134940-01-701	EA	SWITCH-SPST/ON-OFF/BLK W/LGT	L0109
3	096983-01-701	EA	SWITCH - SPST/MOM 2 TERMINAL	L0111-00
4	096983-01-702	EA	SWITCH - MOM/OFF/MOM/3 TERM	L0112-00
5	096983-01-703	EA	SWITCH - ON/ON	L0115-00
10	100258-10-701	EA	GAUGE-HR METER ONLY (LCD)	L0775-00
11	134940-06-700	EA	PC BOARD - SENSOR SYSTEM/RED	L5131-02
12	134940-04-701	EA	BOARD - PC - SOLAR LIGHT	L5121-01
			CONTACT WINNEBAGO PART SALES FOR UNLISTED COMPONENT(S)	

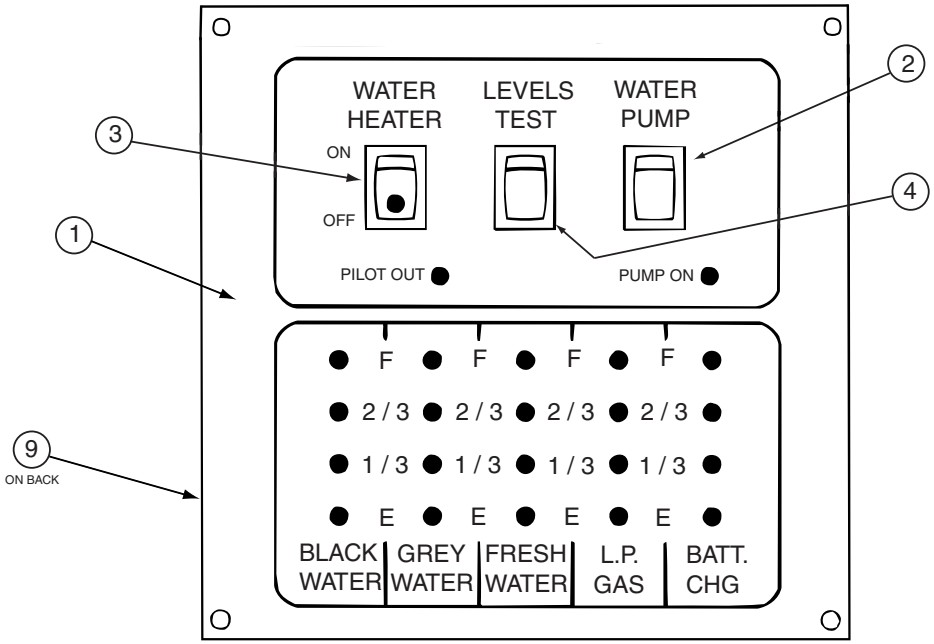

134940-10-01A

KEY	PART NUMBER	U/M	DESCRIPTION	VENDOR NO.
1	134940-10-700	EA	SILKSCREENED CHASSIS	CE0129-00
2	096983-01-703	EA	SWITCH - ON/ON	L0115-00
3	134940-01-701	EA	SWITCH-SPST/ON-OFF/BLK W/LGT	L0109
4	096983-01-701	EA	SWITCH - SPST/MOM 2 TERMINAL	L0111-00
9	134940-06-700	EA	PC BOARD - SENSOR SYSTEM/RED	L5131-02
			CONTACT WINNEBAGO PART SALES FOR UNLISTED COMPONENT(S)	

COPYRIGHT © 2009 WINNEBAGO INDUSTRIES INC.

137135-05-000

KEY	PART NUMBER	U/M	DESCRIPTION	VENDOR NO.
	120233-01-714	EA	CLIP-E	5160818
	120233-01-737	EA	PLATE/INT-W/DIRECTIONAL HDLE	RK-CEIL
	120233-01-738	EA	HDW PKG-HANDLE/SPRING/WASHER	RK-HAND
	120233-04-703	EA	KIT-DIRECTIONAL HDL UPGRADE	RP-RM46
	137135-01-703	EA	KIT ELEV-SHAFT/PLUG/SPRING	RP-4400
	137135-01-704	EA	PIN - 1/4" X 3.25"	2160813
	137135-01-708	EA	TURRET	3100728
	137135-01-710	EA	PLATE - ROTATE LIMIT	3720052
	137135-01-712	EA	BEARING - OUTER	2590347
	137135-01-713	EA	TURRET BASE	3100730
	137135-01-714	EA	GEAR - ELEVATING SHAFT	2200465
	137135-01-715	EA	BEARING - INNER	2590348
	137135-01-717	EA	BOLT - FLAT HEAD	2160362
	137135-01-719	EA	BRACKET - PIVOT	2744945
	137135-01-722	EA	CLAMP	2590343

COPYRIGHT © 2009 WINNEBAGO INDUSTRIES INC.

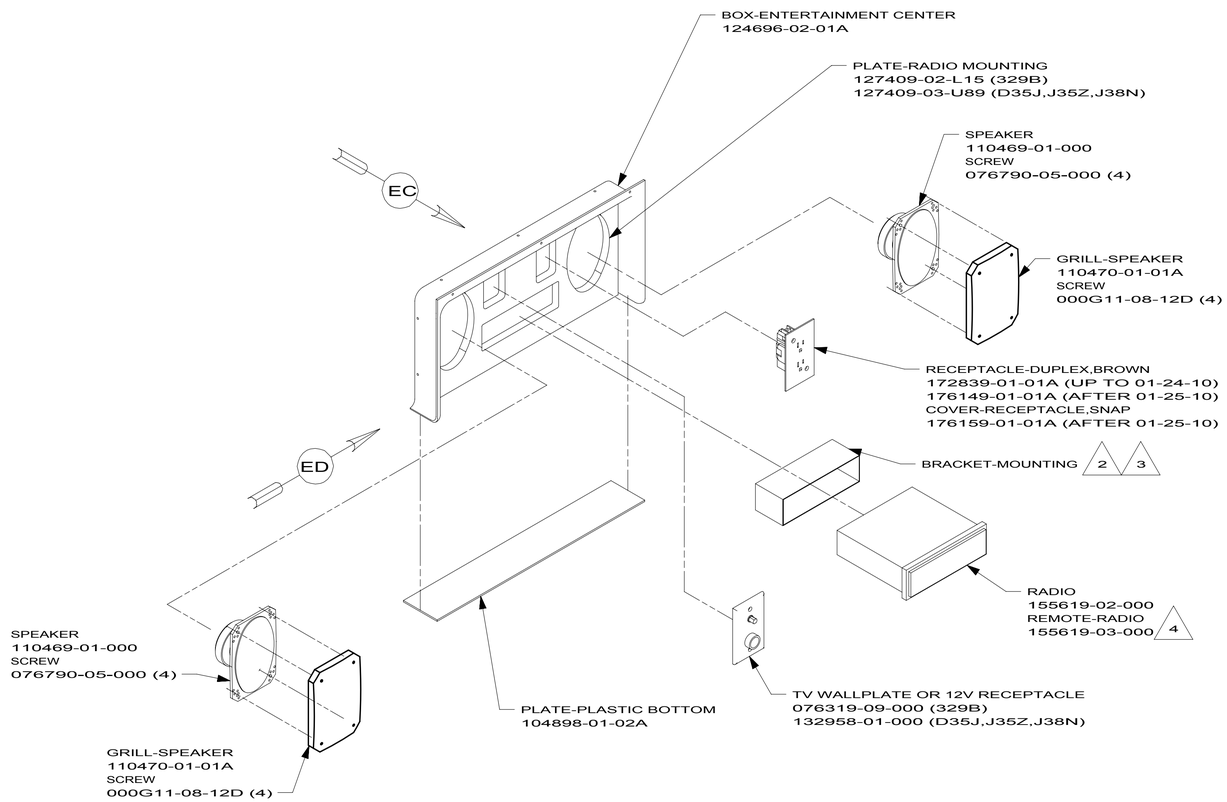

144818-03
329B

144818-07
D35J,J35Z,J38N

4 PUT IN INFO CASE.

3 SUPPLIED WITH RADIO

2 BEND TABS ON MOUNTING BRACKET SUPPLIED WITH RADIO, TO HOLD IN PLACE.

1. SEE WIRING INSTL-BODY FOR ADDITIONAL INFORMATION.

NOTES:

FOR ELECTRICAL TORQUE SPECIFICATIONS SEE DWG NO. 128783-01-000	X-X FOR ELECTRICAL CALLOUTS SEE DWG NO. 121339-01-000

1D5 ENTERTAINMENT CENTER/EXT W/CD

1D5

04 MOTORHOMES

ENTERTAINMENT CENTER COMPL

2 144818

1/26/2010

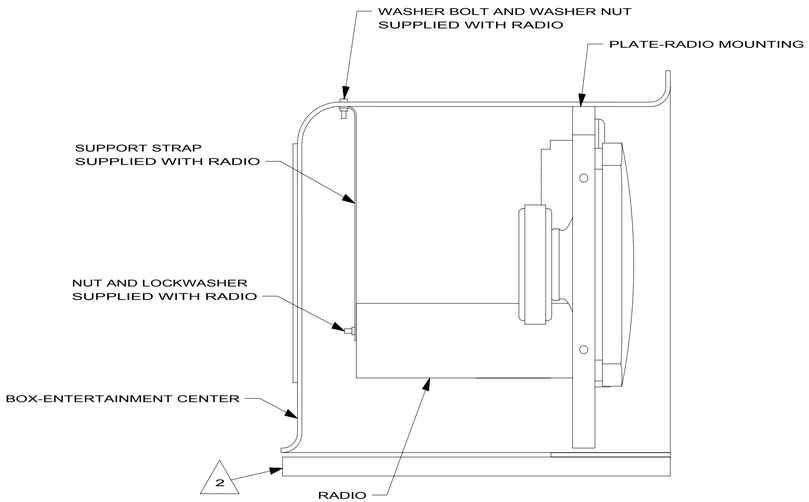

DETAIL EB

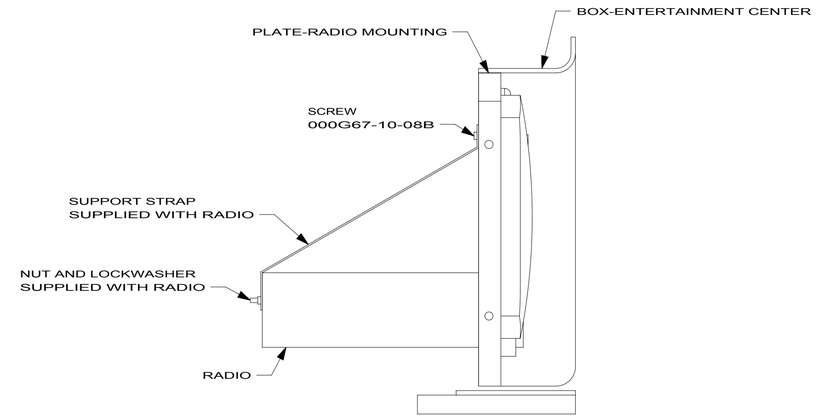

DETAIL ED

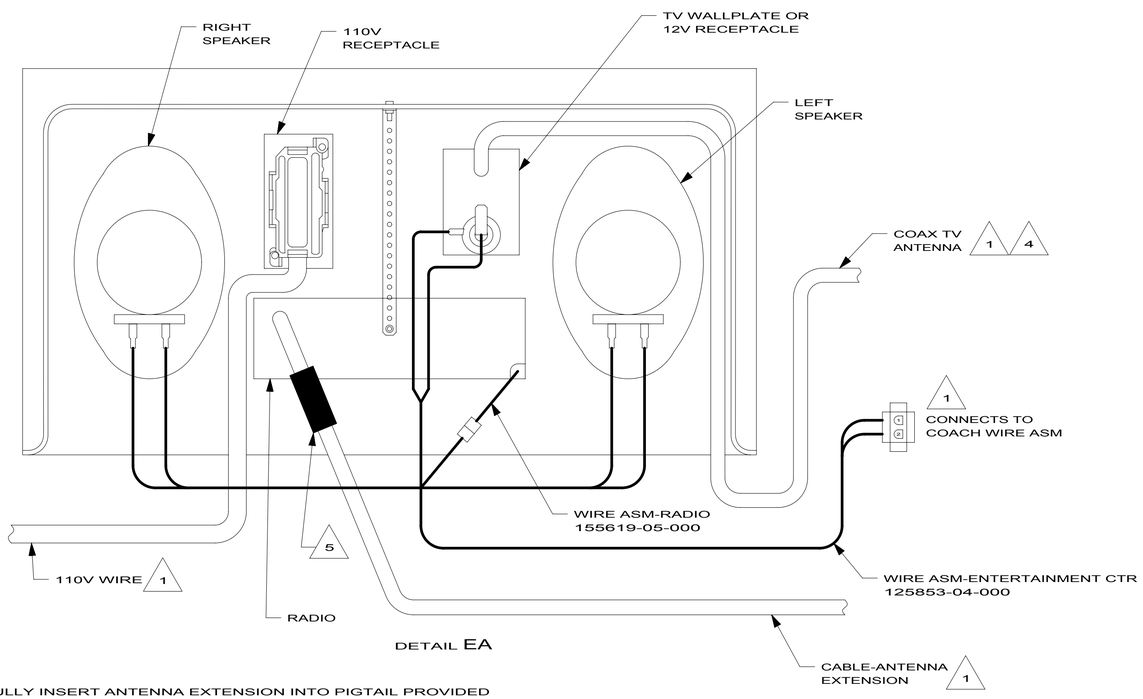

DETAIL EA

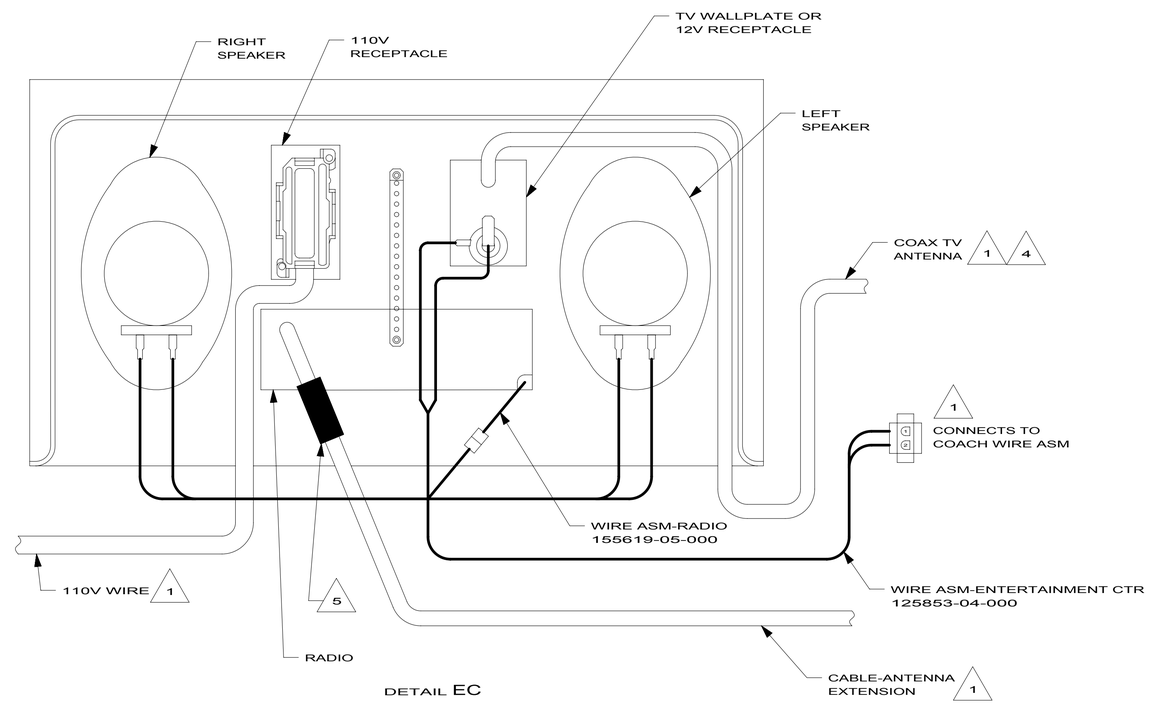

DETAIL EC

NOTES:

1. SEE WIRING INSTL-BODY FOR ADDITIONAL INFORMATION.
2. PLYWOOD ON TAB -02 ONLY.
4. COAX ON TABS -02, & -03 ONLY.
5. FULLY INSERT ANTENNA EXTENSION INTO PIGTAIL PROVIDED ON RADIO & WRAP WITH TAPE 008363-01-000 (100mm).

FOR ELECTRICAL TORQUE SPECIFICATIONS SEE DWG NO. 128783-01-000	X-X FOR ELECTRICAL CALLOUTS SEE DWG NO. 121339-01-000

04 MOTORHOMES

ENTERTAINMENT CENTER COMPL

4 144818

1/26/2010

163097-01-000

KEY	PART NUMBER	U/M	DESCRIPTION	VENDOR NO.
	163097-01-700	EA	KEY - #2382 (ILLINOIS LOCK)	2382
	163097-01-701	EA	KEY - #2341 (MILLER DIAL)	PART SALES

COPYRIGHT © 2009 WINNEBAGO INDUSTRIES INC.

170693-02-02A

KEY	PART NUMBER	U/M	DESCRIPTION	VENDOR NO
	170693-02-700	EA	LENS-OPTIC	L8106

COPYRIGHT © 2010 WINNEBAGO INDUSTRIES INC.

172120-01-000

KEY	PART NUMBER	U/M	DESCRIPTION	VENDOR NO.
	172120-01-700	EA	REMOTE - RADIO	REMJCD

COPYRIGHT © 2010 WINNEBAGO INDUSTRIES INC.

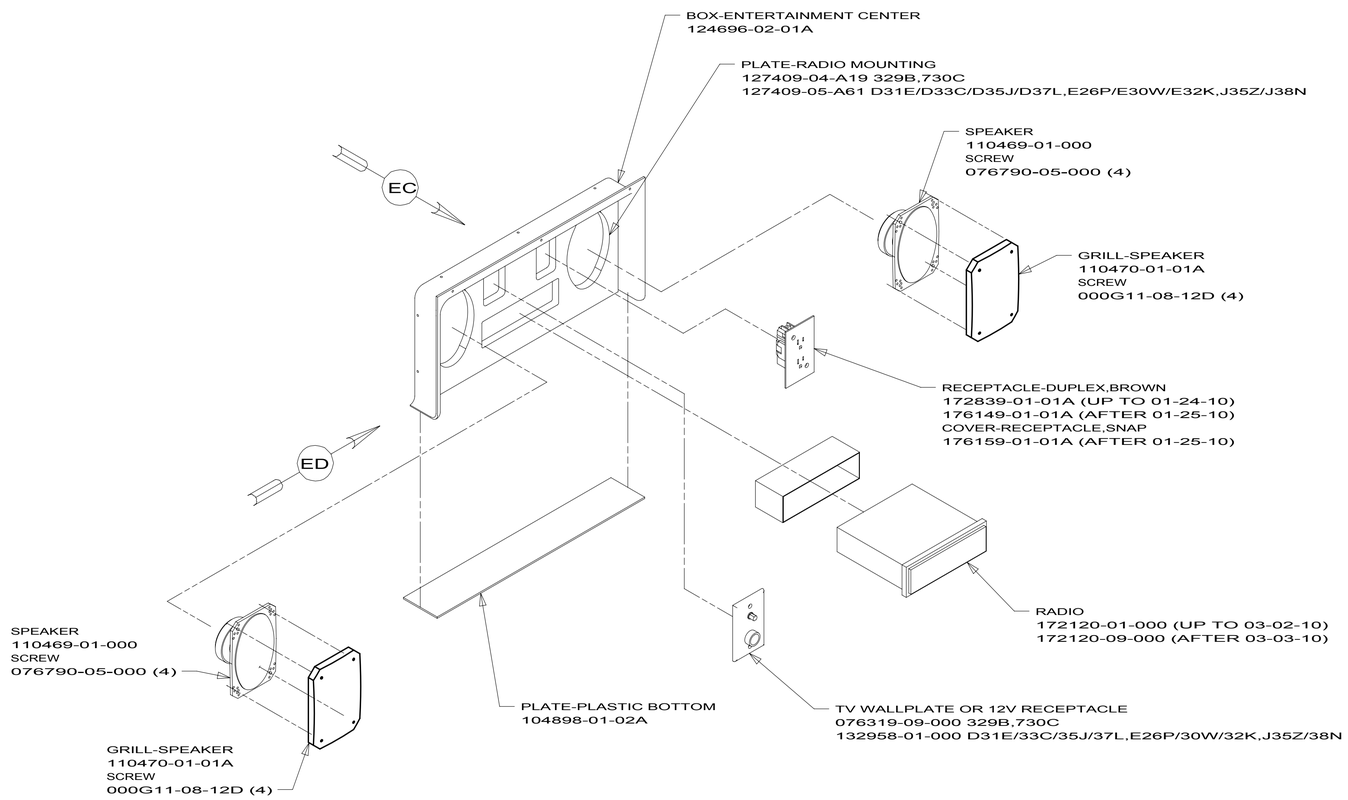

173464-03
329B
730C

173464-07
D31E
D33C
D35J
D37L
E26P
E30W
E32K
J35Z
J38N

1D5 ENTERTAINMENT CENTER/EXT W/CD

FOR ELECTRICAL TORQUE SPECIFICATIONS SEE DWG NO. 128783-01-000

X-X

FOR ELECTRICAL CALLOUTS SEE DWG NO. 121339-01-000

10 MOTORHOMES

ENTERTAINMENT CENTER COMPL

2 173464

1. SEE WIRING INSTL-BODY FOR ADDITIONAL INFORMATION.

NOTES:

2/26/2010

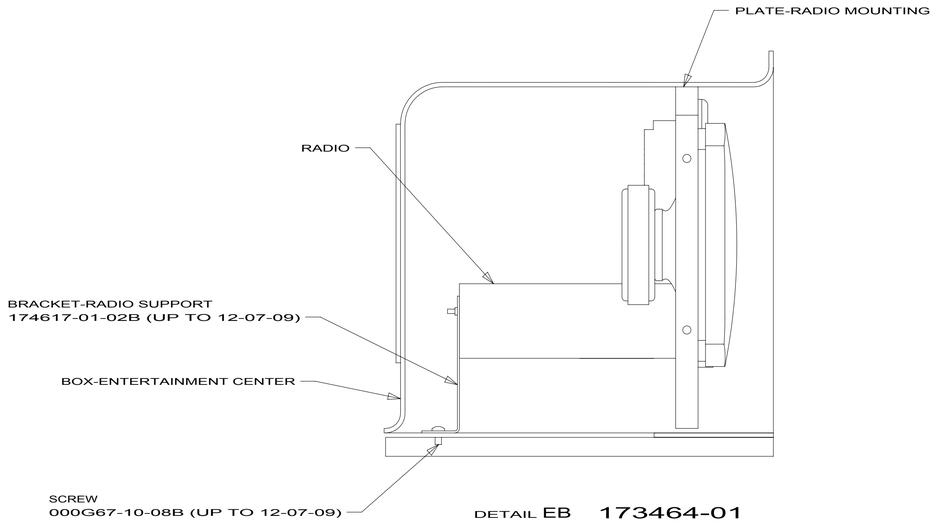

DETAIL EB 173464-01

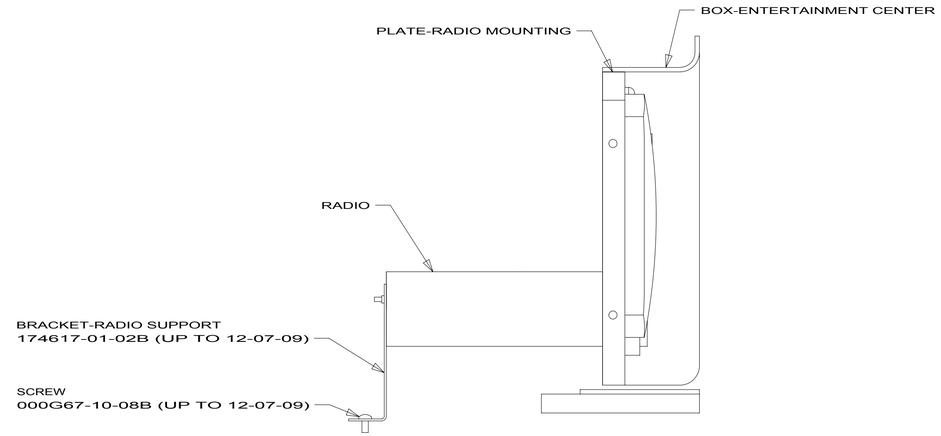

DETAIL ED 173464-03
173464-07
173464-08

173464-01
173464-03
173464-07
173464-08

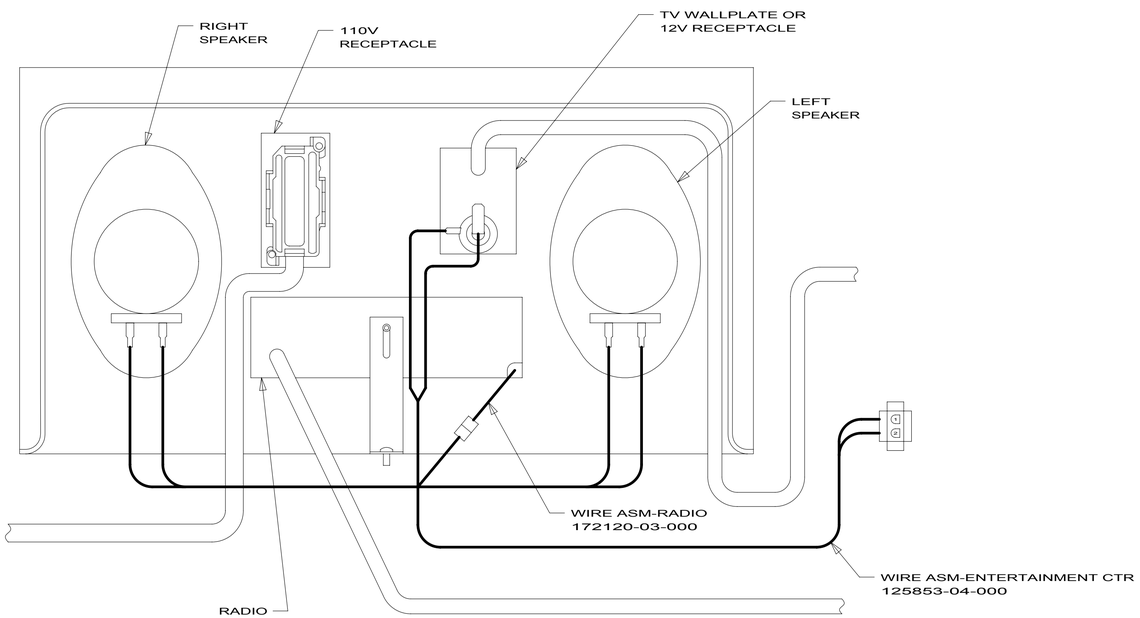

DETAIL EA 173464-01

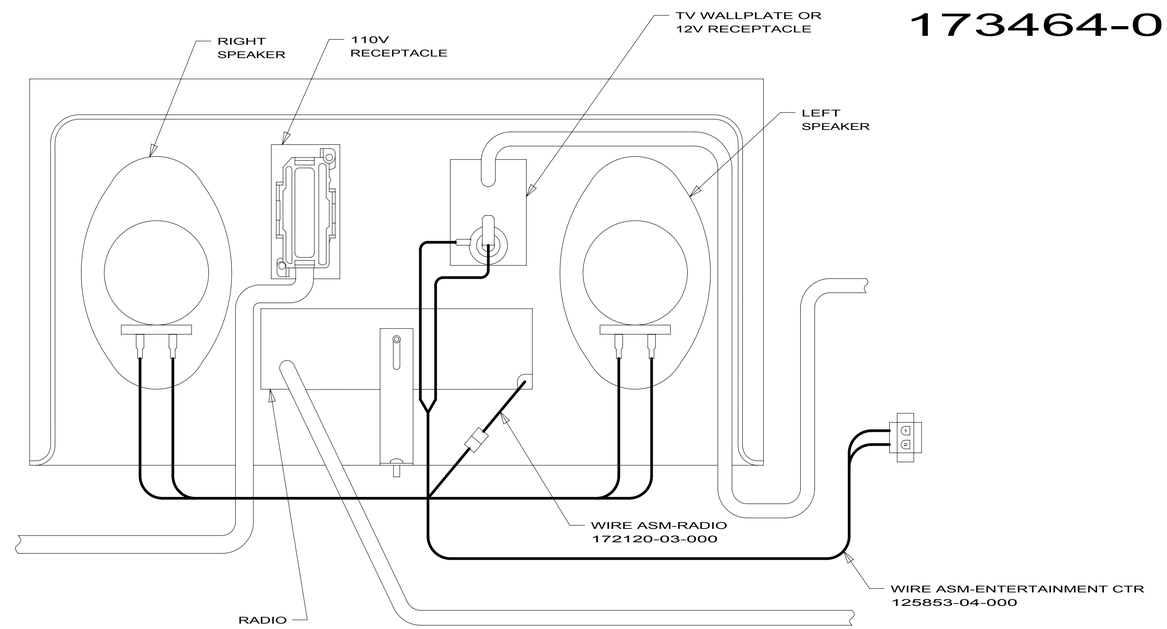

DETAIL EC 173464-03
173464-07
173464-08

1D5 ENTERTAINMENT CENTER/EXT W/CD

FOR ELECTRICAL TORQUE SPECIFICATIONS SEE DWG NO. 128783-01-000

X-X

FOR ELECTRICAL CALLOUTS SEE DWG NO. 121339-01-000

10 MOTORHOMES

ENTERTAINMENT CENTER COMPL

4 173464

2/26/2010

DWG NO 169848

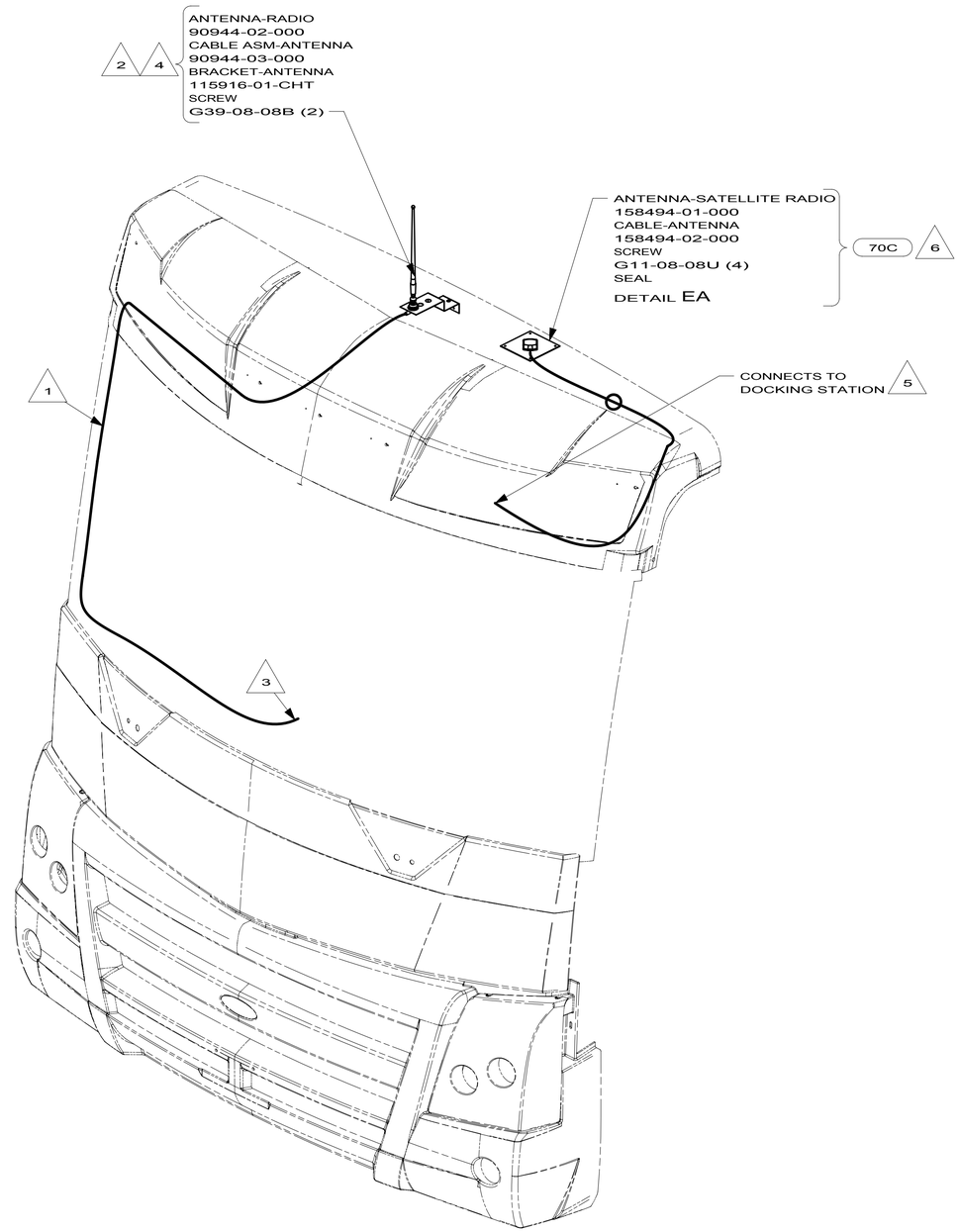

D-Series
E-Series
J-Series
169848-05

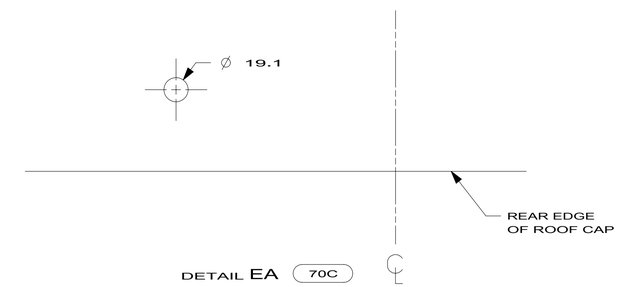

6 MOUNT ANTENNA SUCH THAT BASE IS SQUARE W/REAR OF ROOF CAP & HOLE IS DIRECTLY OVER HOLE IN FIBERGLASS. SEAL HOLE IN ROOF CAP, BASE AT SCREWS.

5 SEE WIRING INSTL-FRONT END FOR ADDITIONAL INFORMATION.

4 USE HOLE IN BRACKET AS GUIDE TO DRILL 13 DIAMETER HOLE IN FIBERGLASS.

3 TO RADIO.

2 SEAL AROUND ANTENNA BASE.

1 ROUTE CABLE ALONG A-POST,UNDER TRIM COVER.

NOTES:

70C RADIO - SATELLITE

265 CODES/STANDARDS-CSA/CMVSS

1B1 CODES/STANDARDS USA

1B1 265

FOR ELECTRICAL TORQUE SPECIFICATIONS SEE DWG NO. 128783-01-000

X-X FOR ELECTRICAL CALLOUTS SEE DWG NO. 121339-01-000

FIRST USED
10 MOTORHOMES

DO NOT SCALE DRAWING

TITLE:
ANTENNA INSTL-RADIO AND CB

SHEET 5 | PART NO 169848 | REV

10/20/2009

DRAWING NO.	FEATURE
172368-01	1PR
172368-02	16K 16L
172368-03	1PU

RELEASE	REV	DATE	DWG NO
	A		172368

REV	ZONE	REVISION RECORD	DATE	DFTR-ORIG

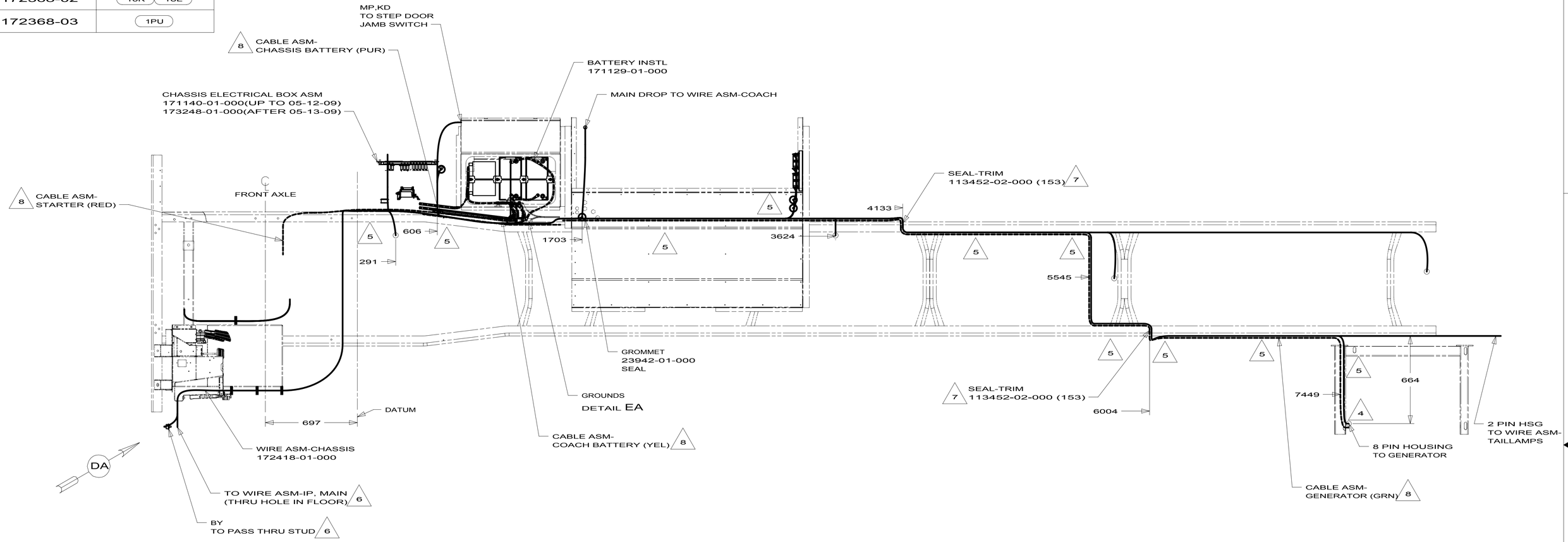

1PU	WKHRSE 22K 230HP DSL 22.5TIR
16L	FORD 22,000#-22.5 AL WHL
16K	FORD CHASSIS 22,000
1PR	WORKHORSE 22,000#-19.5 TIRE
265	CODES/STANDARDS - CSA/CMVSS
1B1	CODES/STANDARDS - USA

1B1 265 1PR

8 SEE BATTERY INSTALLATION FOR ADDITIONAL INFORMATION.

7 COVER SHARP EDGES WHERE WIRE CROSSES FRAME RAIL.

6 SEE WIRING INSTL-FRONT END FOR ADDITIONAL INFORMATION.

5 CLAMP 83610-01-000, SCREW G11-10-16B.

4 WIRE TIE 8343-04-000. FASTEN EVERY 600MM MINIMUM.

3. ALL DIMENSIONS ARE FROM DATUM UNLESS OTHERWISE SPECIFIED.

2. SECURE CONDUIT 41953, TAB AS REQUIRED, OVER ALL WIRES IN CONTACT WITH SHARP EDGES.

1. LEGEND: WINNEBAGO: CABLE: CHASSIS SUPPLIED WIRING.

NOTES:

FOR ELECTRICAL TORQUE SPECIFICATIONS SEE DWG NO. 128783-01-000

X-X FOR ELECTRICAL CALLOUTS SEE DWG NO. 121339-01-000

WINNEBAGO INDUSTRIES

COPYRIGHT 2009
WINNEBAGO
INDUSTRIES, INC.

DFTR	ORIG. DATE
CHKR	ALL DIMENSIONS ARE IN MILLIMETERS
P.E.	
M.E.	FIRST USED
DSNR	10 D35J

UNSPECIFIED TOLERANCES ARE:

WHOLE DIM (X)	±	3
ONE-PLACE (X.X)	±	1.5
TWO-PLACE (X.XX)	±	0.50
ANGLE	±	1°

MATERIAL:

THIRD ANGLE PROJECTION

DO NOT SCALE DRAWING

TITLE: WIRING INSTL-CHASSIS

SHEET 1 OF 5 | PART NO 172368 | REV

REF: 1

11/19/2009

DWG NO 172368

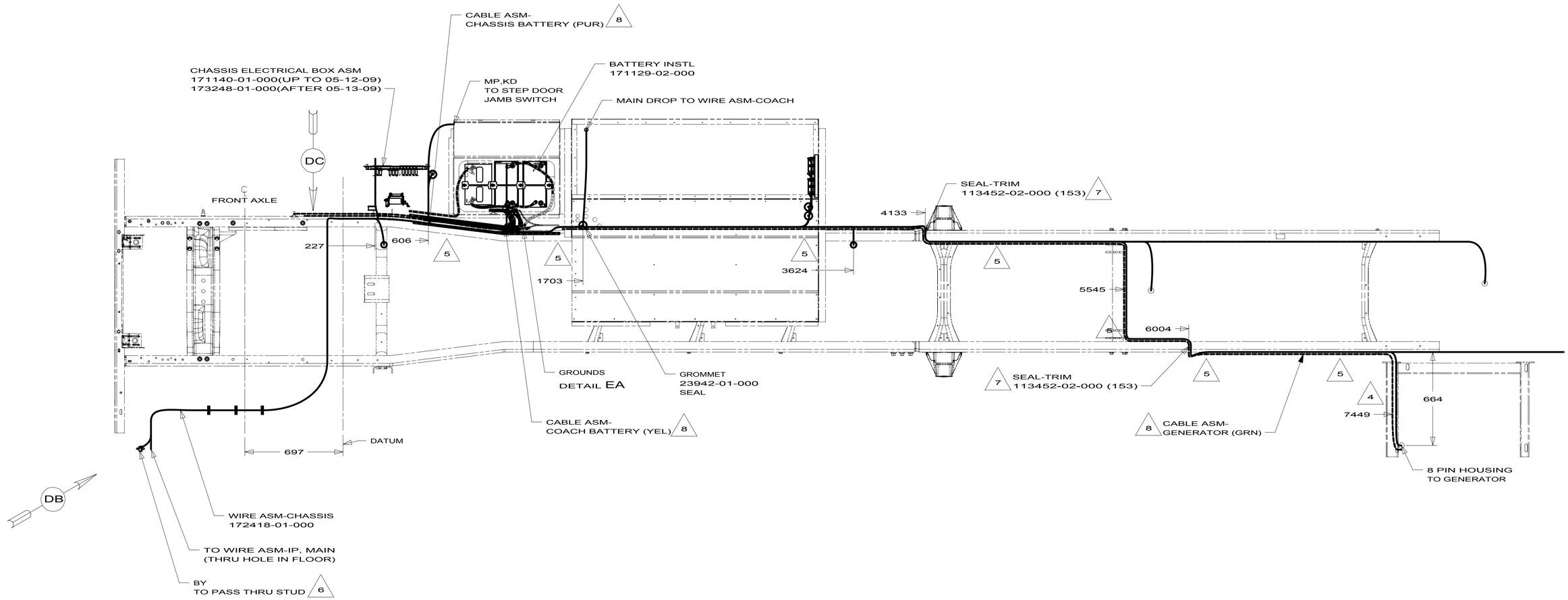

8 SEE BATTERY INSTALLATION FOR ADDITIONAL INFORMATION.

7 COVER SHARP EDGES WHERE WIRE CROSSES FRAME RAILS.

6 SEE WIRING INSTL-FRONT END FOR ADDITIONAL INFORMATION.

5 CLAMP 83610-01-000, SCREW G11-10-16B.

4 WIRE TIE 8343-04-000. FASTEN EVERY 600MM MINIMUM.

3. ALL DIMENSIONS ARE FROM DATUM UNLESS OTHERWISE SPECIFIED.

2. SECURE CONDUIT 41953, TAB AS REQUIRED,
OVER ALL WIRES IN CONTACT WITH SHARP EDGES.

1. LEGEND: WINNEBAGO CABLE: CHASSIS SUPPLIED WIRING.

NOTES:

16L FORD 22,000#-22.5 AL WHL

16K FORD CHASSIS 22,000

265 CODES/STANDARDS - CSA/CMVSS

1B1 CODES/STANDARDS - USA

1B1 265 16K 16L

FOR ELECTRICAL TORQUE SPECIFICATIONS SEE DWG NO. 128783-01-000

X-X FOR ELECTRICAL CALLOUTS SEE DWG NO. 121339-01-000

FIRST USED 10 D35J

DO NOT SCALE DRAWING

TITLE: WIRING INSTL-CHASSIS

SHEET 2 PART NO 172368 REV

11/19/2009

DWG NO 172368

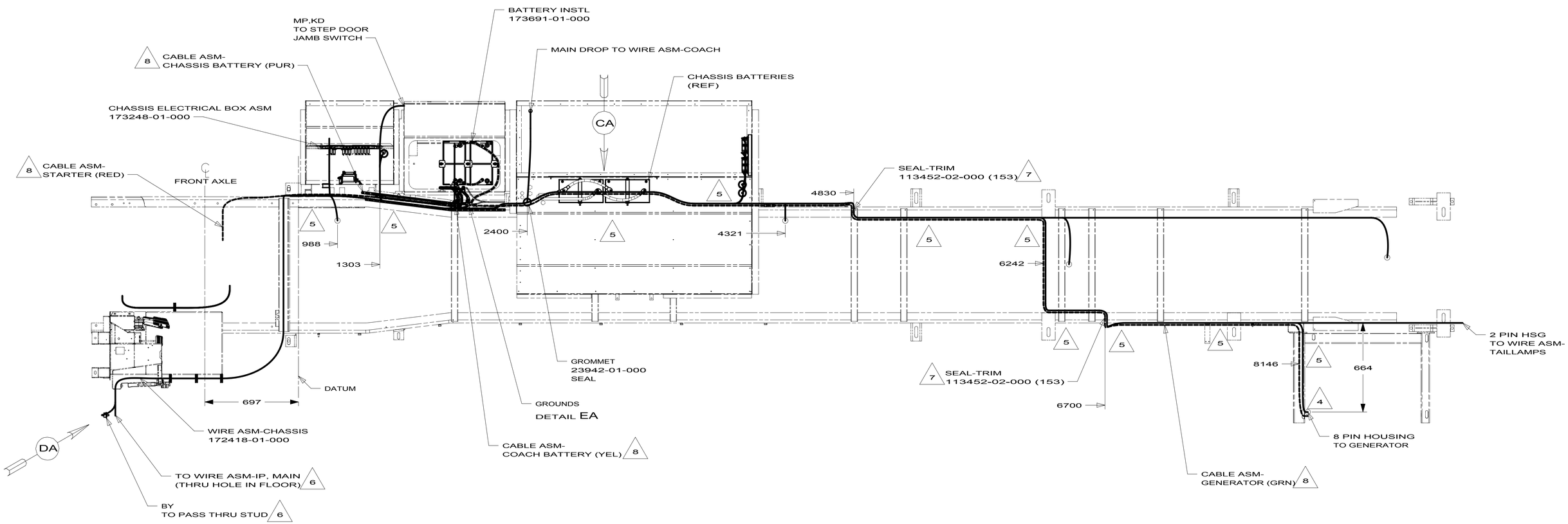

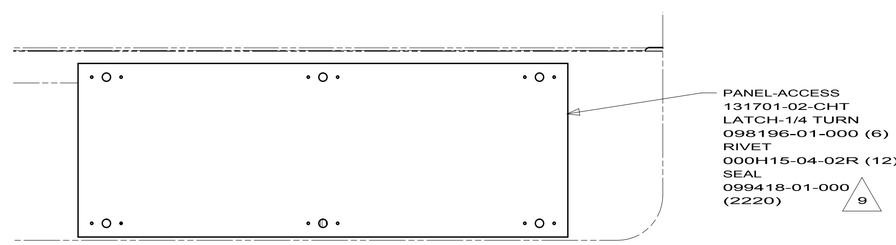

VIEW CA

9 INSTALL SEAL TO INSIDE SURFACE OF COMPARTMENT AROUND PERIMETER OF OPENING WITH SEAM AT TOP OF OPENING.

8 SEE BATTERY INSTALLATION FOR ADDITIONAL INFORMATION.

7 COVER SHARP EDGES WHERE WIRE CROSSES FRAME RAILS.

6 SEE WIRING INSTL-FRONT END FOR ADDITIONAL INFORMATION.

5 CLAMP 83610-01-000, SCREW G11-10-16B.

4 WIRE TIE 8343-04-000. FASTEN EVERY 600MM MINIMUM.

3. ALL DIMENSIONS ARE FROM DATUM UNLESS OTHERWISE SPECIFIED.

2. SECURE CONDUIT 41953, TAB AS REQUIRED, OVER ALL WIRES IN CONTACT WITH SHARP EDGES.

1. LEGEND: WINNEBAGO: CABLE: CHASSIS SUPPLIED WIRING.

NOTES:

1PU WKHRSE 22K 230HP DSL 22.5TIR

265 CODES/STANDARDS - CSA/CMVSS

1B1 CODES/STANDARDS - USA

1B1 265 1PU

FOR ELECTRICAL TORQUE SPECIFICATIONS SEE DWG NO. 128783-01-000

X-X FOR ELECTRICAL CALLOUTS SEE DWG NO. 121339-01-000

FIRST USED 10 D35J

DO NOT SCALE DRAWING

TITLE: WIRING INSTL-CHASSIS

SHEET 3 PART NO 172368 REV

11/19/2009

DWG NO 172368

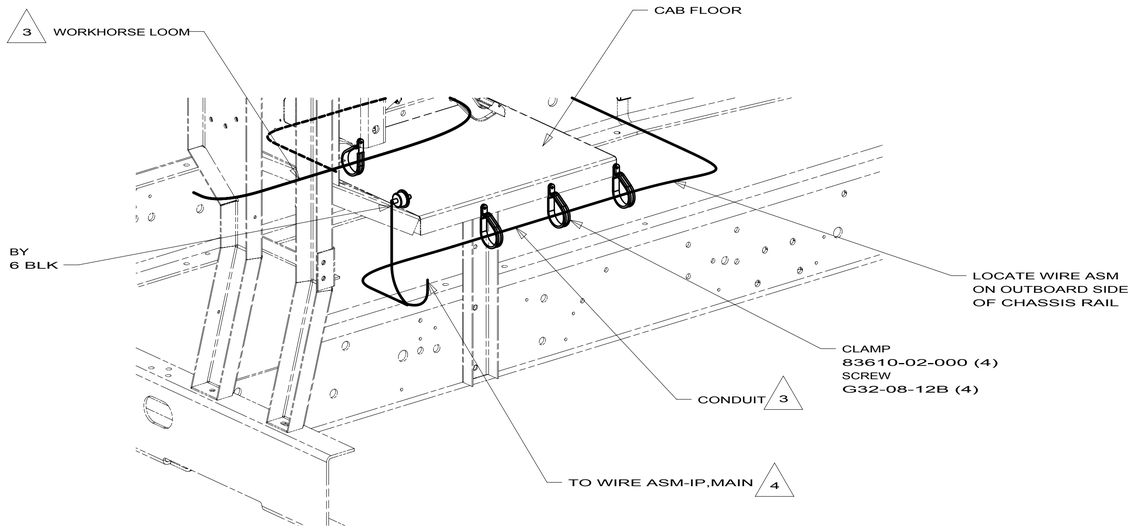

VIEW DA 1PR 1PU

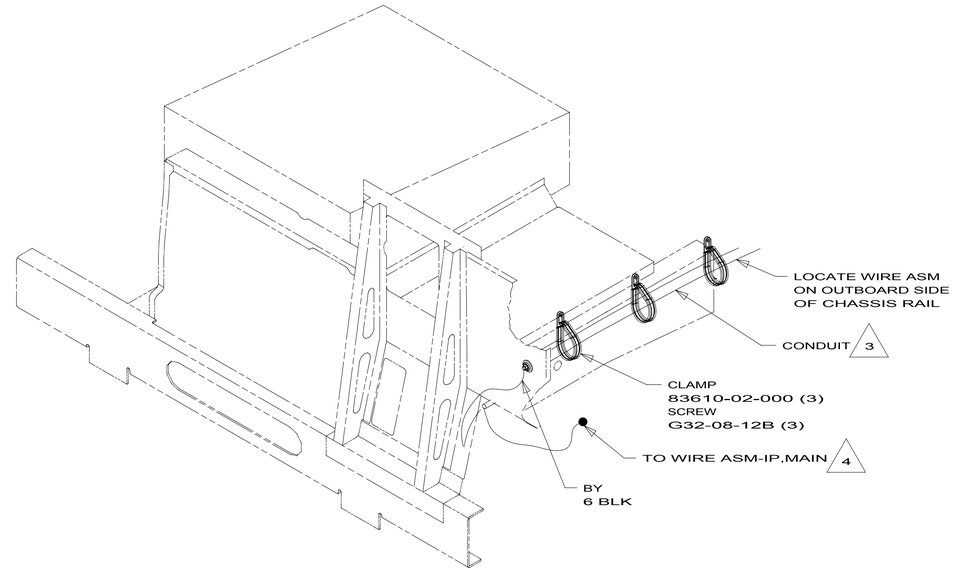

VIEW DB 16K 16L

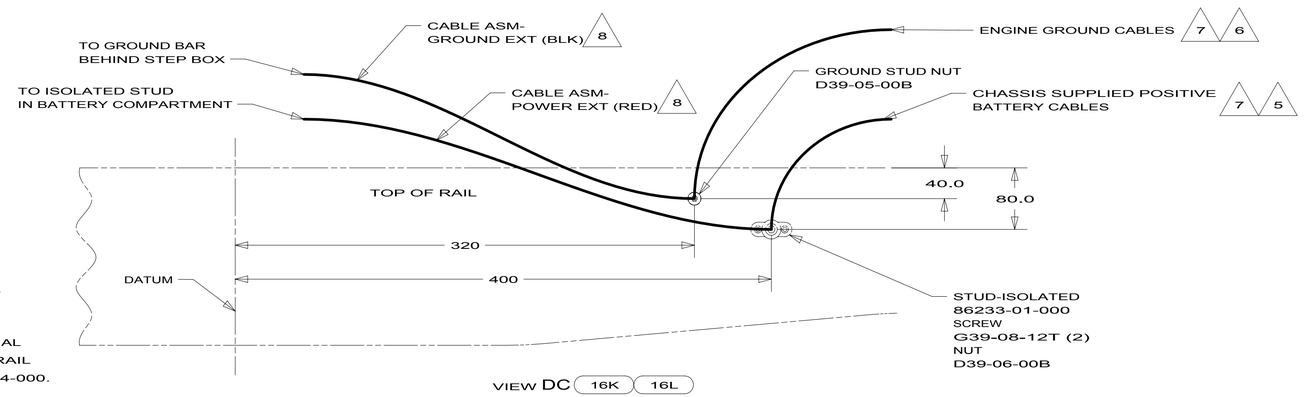

VIEW DC 16K 16L

NOTES:

1. CUT OFF EXCESS END OF WIRE TIE.
2. CONNECT CABLES TO COACH SIDE OF BATTERY DISCONNECT WHEN BATTERY DISCONNECT IS USED.
3. COVER WITH CONDUIT 41953-10-000 AND 41953-11-000 AS REQUIRED.
4. ROUTE WIRE THRU HOLE IN CAB FLOOR.
5. CUT CHASSIS SUPPLIED POSITIVE BATTERY CABLE 150MM FROM BATTERY TERMINAL END, DISCARD TERMINAL END AND ADD TERMINAL 113738-01-000 TO CUT END. COIL EXCESS CABLE ALONG FRAME RAIL JUST BEHIND THE RADIATOR AND TIE UP WITH TIE-WIRE 8343-04-000.
6. CUT CHASSIS SUPPLIED BATTERY GROUND CABLE 700MM FROM BATTERY TERMINAL AND ADD TERMINAL 8348-01-000 TO CUT END.
7. SUPPLIED WITH CHASSIS
8. SEE BATTERY INSTL FOR ADDITIONAL INFORMATION.

1PU	WKHRSE 22K 230HP DSL 22.5TIR
16L	FORD 22,000#-22.5 AL WHL
1PR	WORKHORSE 22,000#-19.5 TIRE
16K	FORD CHASSIS 22,000
265	CODES/STANDARDS-CSA/CMVSS
1B1	CODES/STANDARDS USA

1B1 265

FOR ELECTRICAL TORQUE SPECIFICATIONS SEE DWG NO. 128783-01-000

X-X FOR ELECTRICAL CALLOUTS SEE DWG NO. 121339-01-000

FIRST USED 10 D35J

DO NOT SCALE DRAWING

TITLE: WIRING INSTL-CHASSIS

SHEET 4 PART NO 172368 REV

11/19/2009

DWG NO 172368

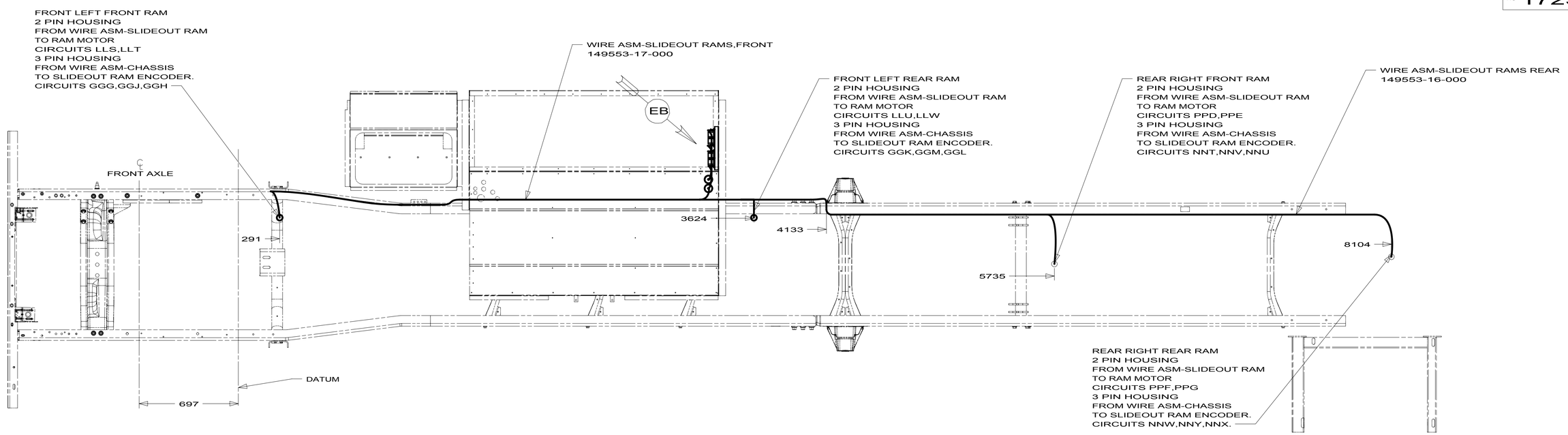

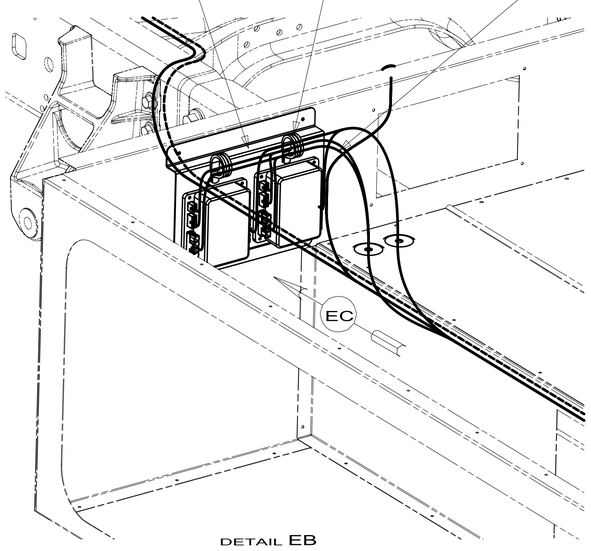

DETAIL EB

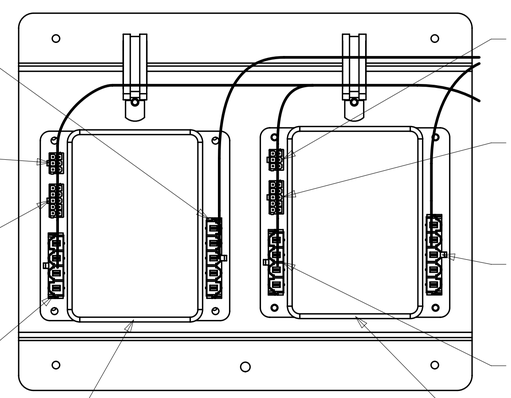

DETAIL EC

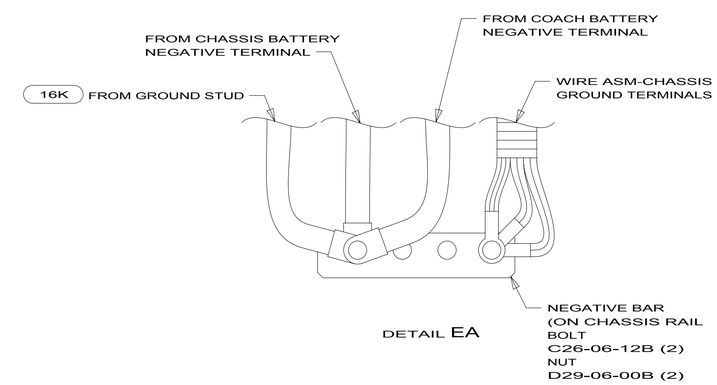

DETAIL EA

1PU	WKHRSE 22K 230HP DSL 22.5TIR
1PR	WORKHORSE 22,000#-19.5 TIRE
16K	FORD CHASSIS 22,000
265	CODES/STANDARDS-CSA/CMVSS
1B1	CODES/STANDARDS USA

1B1 265 16K 1PR 1PU

FOR ELECTRICAL TORQUE SPECIFICATIONS SEE DWG NO. 128783-01-000

X-X FOR ELECTRICAL CALLOUTS SEE DWG NO. 121339-01-000

FIRST USED 10 D35J

DO NOT SCALE DRAWING

TITLE: WIRING INSTL-CHASSIS

SHEET 5 PART NO 172368 REV

1 SEE CHASSIS ELECTRICAL BOX FOR ADDITIONAL INFORMATION.

NOTES:

11/19/2009

DRAWING NO.	FEATURES	SHEETS
171129-01	1PS 1PR	1,2,4
171129-02	16H 16L 16K	1,3,4

RELEASE	REV A	DATE	DWG NO 171129

REV	ZONE	REVISION RECORD	DATE	DFTR-ORIG

D-SERIES

		D31E	D33C	D35J	D37L
CABLE ASM-CHASSIS GND EXT (BLK)	16K 16L	133566-12-019	133566-12-042	133566-12-019	133566-12-034
CABLE ASM-CHASSIS POWER EXT (RED)	16K 16L	141415-32-018	141415-32-047	141415-32-017	141415-32-038
CABLE ASM-CHASSIS BATTERY DISCONNECT SUPPLY (RED)	16K 16L	141415-32-013	141415-32-055	141415-32-013	141415-32-034
CHASSIS SUPPLIED POSITIVE CABLE CHASSIS BATTERY DISCONNECT SUPPLY (RED)	1PS 1PR	1300	141415-38-063 △3	1300	141415-38-034 △3 △2
CABLE ASM-STARTER (RED)	1PS 1PR	141415-35-024	141415-35-052	141415-35-023	141415-35-042 △1
CABLE ASM-COACH BATTERY DISCONNECT SUPPLY (YEL)	16K 1PR 16L 1PS	141416-52-014	141416-52-051	141416-52-014	141416-52-035
CABLE ASM-COACH BATTERY GND (BLK)	16K 1PR 16L 1PS	133567-12-008	133567-12-008	133567-12-008	133567-12-008
CABLE ASM-CHASSIS BATTERY DISCONNECT RETURN (PUR)	16K 1PR 16L 1PS	141415-12-012	141415-12-053	141415-12-012	141415-12-036
CABLE ASM-GENERATOR (GRN)	16K 1PR 16L 1PS	141415-42-089	141415-42-083	141415-42-095	141415-42-105
LEVELING SYSTEM POWER CABLE (BLU)	60M	141415-22-037	141415-22-065	141415-22-033	141415-22-063
LEVELING SYSTEM GND CABLE (BLK)	60M	133566-11-008	133566-11-008	133566-11-008	133566-11-008
WIRE ASM-INVERTER	40D	----------	----------	----------	154845-01-025

E-SERIES

		E26P	E30W	E32K
CABLE ASM-CHASSIS GND EXT (BLK)	16H 16K 16N	133566-12-018	133566-12-032	133566-12-031
CABLE ASM-CHASSIS POWER EXT (RED)	16H 16K 16N	141415-32-020	141415-32-036	141415-32-033
CABLE ASM-CHASSIS BATTERY DISCONNECT SUPPLY (RED)	16H 16K 16N	141415-32-015	141415-32-024	141415-32-027
CHASSIS SUPPLIED POSITIVE CABLE CHASSIS BATTERY DISCONNECT SUPPLY (RED)	1PJ 1PL 1PR	1300	141415-38-025 △3	141415-38-027 △3 △2
CABLE ASM-STARTER (RED)	1PJ 1PL 1PR	141415-35-025	141415-35-042	141415-35-038 △1
CABLE ASM-COACH BATTERY DISCONNECT SUPPLY (YEL)	16H 16K 16N 1PJ 1PL 1PR	141416-52-014	141416-52-027	141416-52-030
CABLE ASM-COACH BATTERY GND (BLK)	16H 16K 16N 1PJ 1PL 1PR	133567-12-008	133567-12-008	133567-12-008
CABLE ASM-CHASSIS BATTERY DISCONNECT RETURN (PUR)	16H 16K 16N 1PJ 1PL 1PR	141415-12-012	141415-12-027	141415-12-026
CABLE ASM-GENERATOR (GRN)	16H 16K 16N 1PJ 1PL 1PR	141415-42-074	141415-42-075	141415-42-089
CABLE ASM-GENERATOR GND (BLK)	16H 16K 16N 1PJ 1PL 1PR	133566-12-008	133566-12-008	-----
LEVELING SYSTEM POWER CABLE (BLU)	60M	141415-22-035	141415-22-052	141415-22-049
LEVELING SYSTEM GND CABLE (BLK)	60M	133566-11-008	133566-11-008	133566-11-008

1PS	WORKHORSE 22,000#-22.5 TIRE
40D	INVERTER-DC/AC,600 WATT
16L	FORD 22,000#-22.5 AL WHL
64H	HYDRAULIC LEVELING JACKS
60M	HYDRAULIC LEVEL JACKS-AUTO
1PR	WORKHORSE 22,000#-19.5 TIRE
16K	FORD CHASSIS 22,000
16H	FORD CHASSIS 18,000#/V10 ENG
265	CODES/STANDARDS-CSA/CMVSS
1B1	CODES/STANDARDS USA

1B1 265

△3 SEE DETAIL DA FOR CONNECTORS INFORMATION.

△2 LOCATE CHASSIS SUPPLIED POSITIVE CABLE; REDUCE LENGTH TO DIMENSION IN COLUMN AND ADD TERMINAL 68070-01-000 TO THE CUT END (1800MM CHASSIS SUPPLIED LENGTH)

△1 BATTERY CABLES MUST BE INSTALLED TO STARTER MOTOR BEFORE ENGINE WIRING HARNESS AND ROUTED IN SUCH A MANNER AS TO PREVENT ANY POSSIBLE DEGRADATION FROM THE EXHUAST SYSTEM.

NOTES:

FOR ELECTRICAL TORQUE SPECIFICATIONS SEE DWG NO. 128783-01-000

X-X FOR ELECTRICAL CALLOUTS SEE DWG NO. 121339-01-000

COPYRIGHT 2009 WINNEBAGO INDUSTRIES, INC.

WINNEBAGO INDUSTRIES

DFTR	ORIG. DATE
CHKR	ALL DIMENSIONS ARE IN MILLIMETERS
P.E.	
M.E.	FIRST USED
DSNR	10 D/E-SERIES

UNSPECIFIED TOLERANCES ARE:
WHOLE DIM (X) ± 3
ONE-PLACE (X.X) ± 1.5
TWO-PLACE (X.XX) ± 0.50
ANGLE ± 1°

MATERIAL:

THIRD ANGLE PROJECTION

DO NOT SCALE DRAWING

TITLE: BATTERY INSTL

SHEET 1 OF 4 | PART NO 171129 | REV

REF: 1

10/5/2009

DWG NO 171129

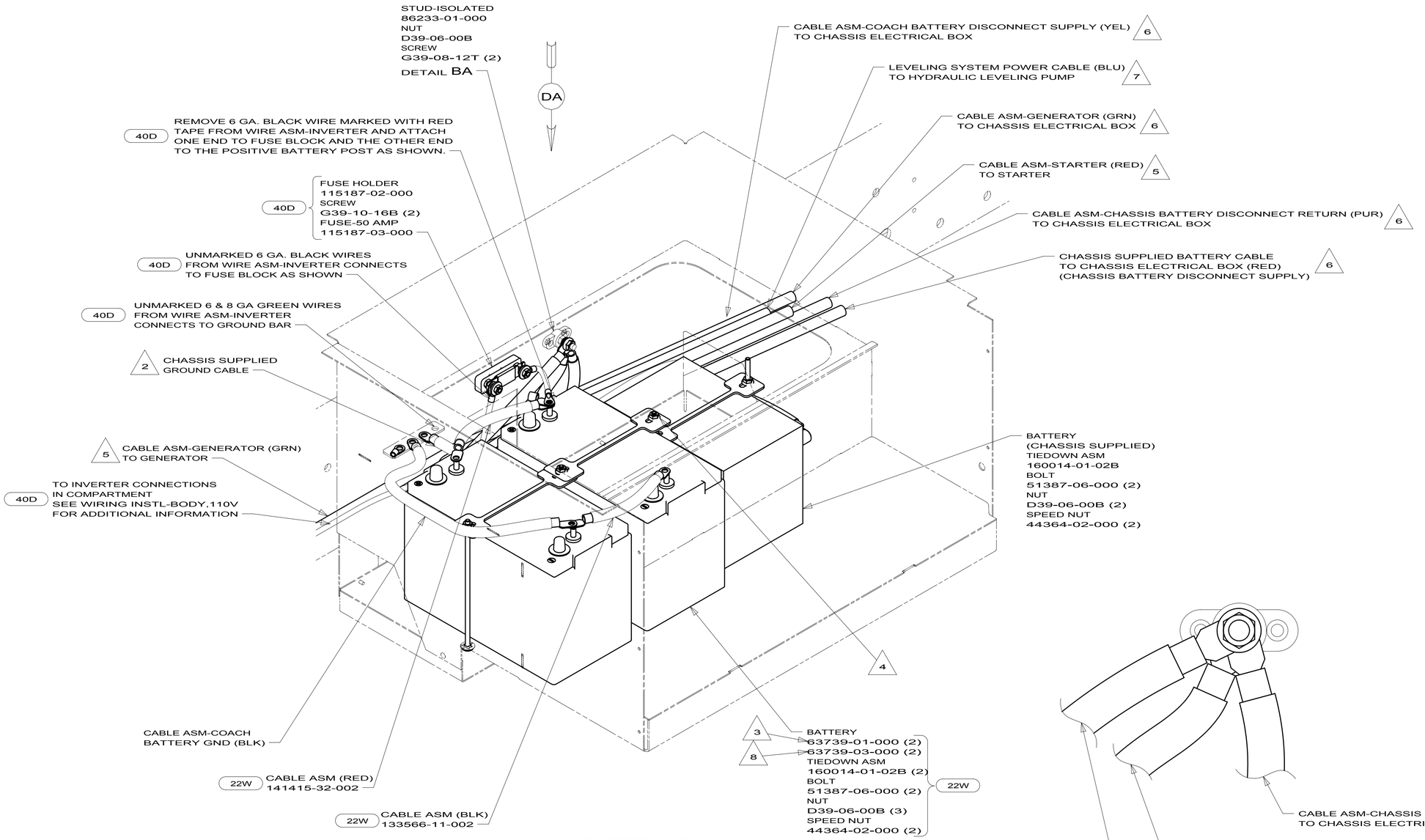

BATTERY BOX
(WORKHORSE)

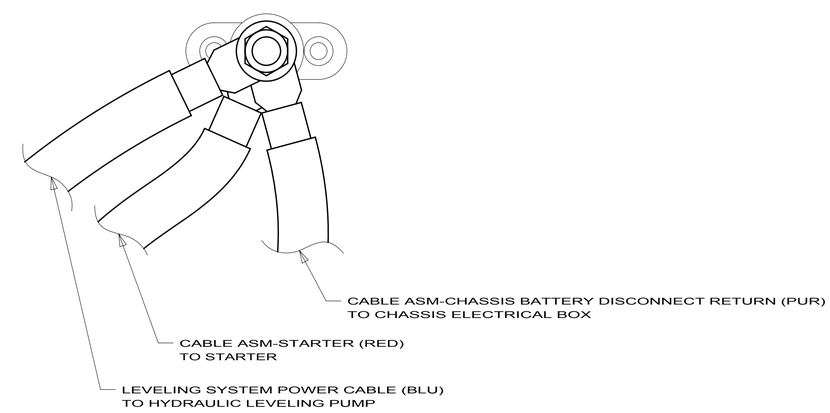

DETAIL BA

8 USED ON D-SERIES ONLY.

7 SEE LEVELING SYSTEM INSTL FOR ADDITIONAL INFORMATION.

6 SEE CHASSIS ELECTRICAL BOX ASM FOR ADDITIONAL INFORMATION.

5 SEE WIRING INSTL-CHASSIS FOR ADDITIONAL INFORMATION.

4 USE TWO NUTS HERE TO ACCOUNT FOR BATTERY HEIGHT DIFFERENCE.

3 USED ON E-SERIES ONLY.

2 LOCATE CHASSIS SUPPLIED GROUND CABLE, REDUCE LENGTH TO 700MM AND ADD TERMINAL 8348-01-000 TO THE CUT END.

1 SUPPLIED WITH CHASSIS.

NOTES:

40D INVERTER-DC/AC,600 WATT

22W BATTERY-SECOND

265 CODES/STANDARDS-CSA/CMVSS

1B1 CODES/STANDARDS USA

1B1 265

FOR ELECTRICAL TORQUE SPECIFICATIONS SEE DWG NO. 128783-01-000

X-X FOR ELECTRICAL CALLOUTS SEE DWG NO. 121339-01-000

FIRST USED
10 D/E-SERIES

DO NOT SCALE DRAWING

TITLE:
BATTERY INSTL

SHEET 2 | PART NO 171129 | REV

10/5/2009

DWG NO 171129

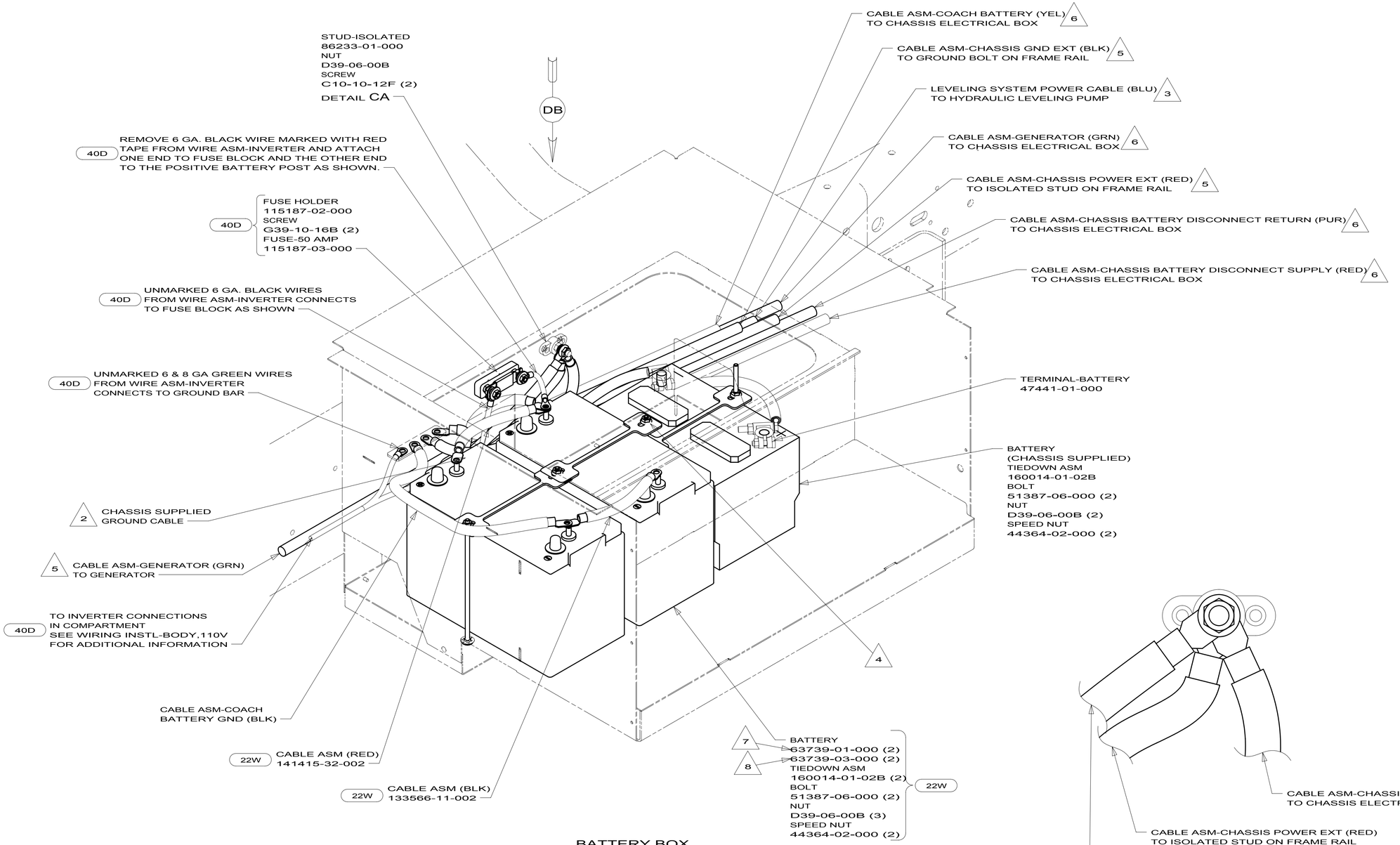

BATTERY BOX
(FORD)

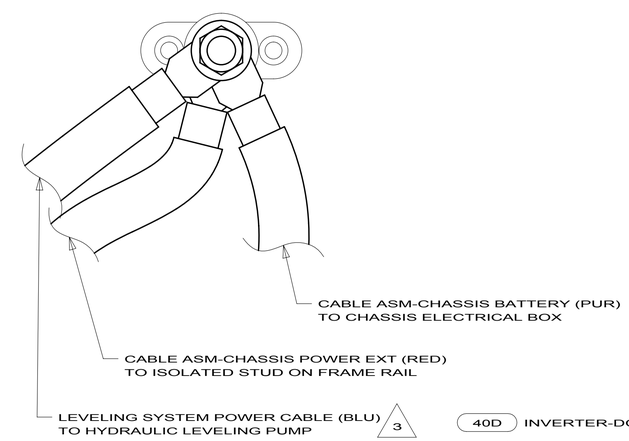

DETAIL CA

8 USED ON D-SERIES ONLY.

7 USED ON E-SERIES ONLY.

6 SEE CHASSIS ELECTRICAL BOX ASM FOR ADDITIONAL INFORMATION.

5 SEE WIRING INSTL-CHASSIS FOR ADDITIONAL INFORMATION.

4 USE TWO NUTS HERE TO ACCOUNT FOR BATTERY HEIGHT DIFFERENCE.

3 SEE LEVELING SYSTEM INSTL FOR ADDITIONAL INFORMATION.

2 LOCATE CHASSIS SUPPLIED GROUND CABLE, REDUCE LENGTH TO 700MM AND ADD TERMINAL 8348-01-000 TO THE CUT END.

1 SUPPLIED WITH CHASSIS.

NOTES:

40D INVERTER-DC/AC,600 WATT

22W BATTERY-SECOND

265 CODES/STANDARDS-CSA/CMVSS

1B1 CODES/STANDARDS USA

1B1 265

FOR ELECTRICAL TORQUE SPECIFICATIONS SEE DWG NO. 128783-01-000

X-X FOR ELECTRICAL CALLOUTS SEE DWG NO. 121339-01-000

FIRST USED
10 D/E-SERIES

DO NOT SCALE DRAWING

TITLE:
BATTERY INSTL

SHEET 3 | PART NO 171129 | REV

10/5/2009

DWG NO 171129

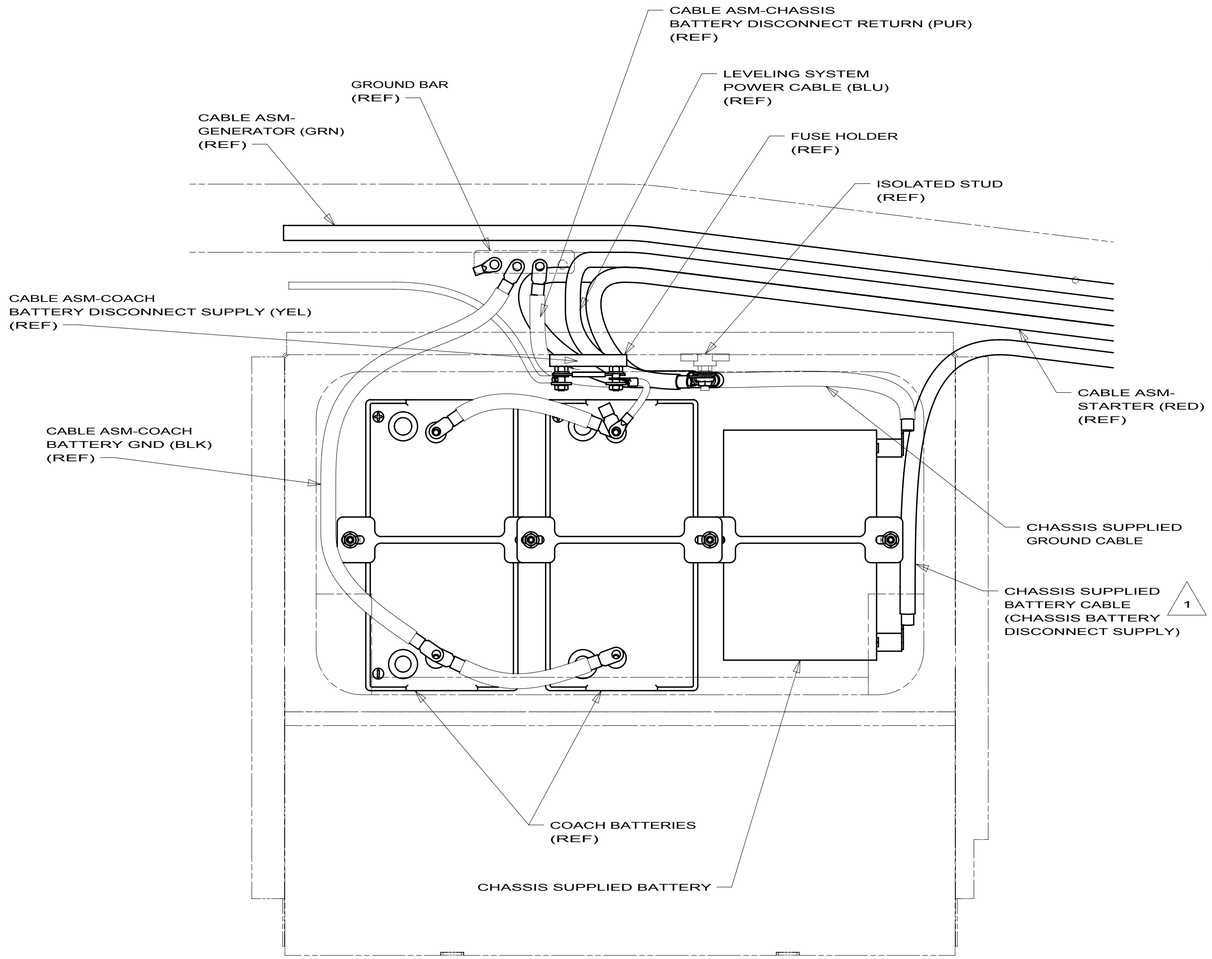

VIEW DA
(WORKHORSE)

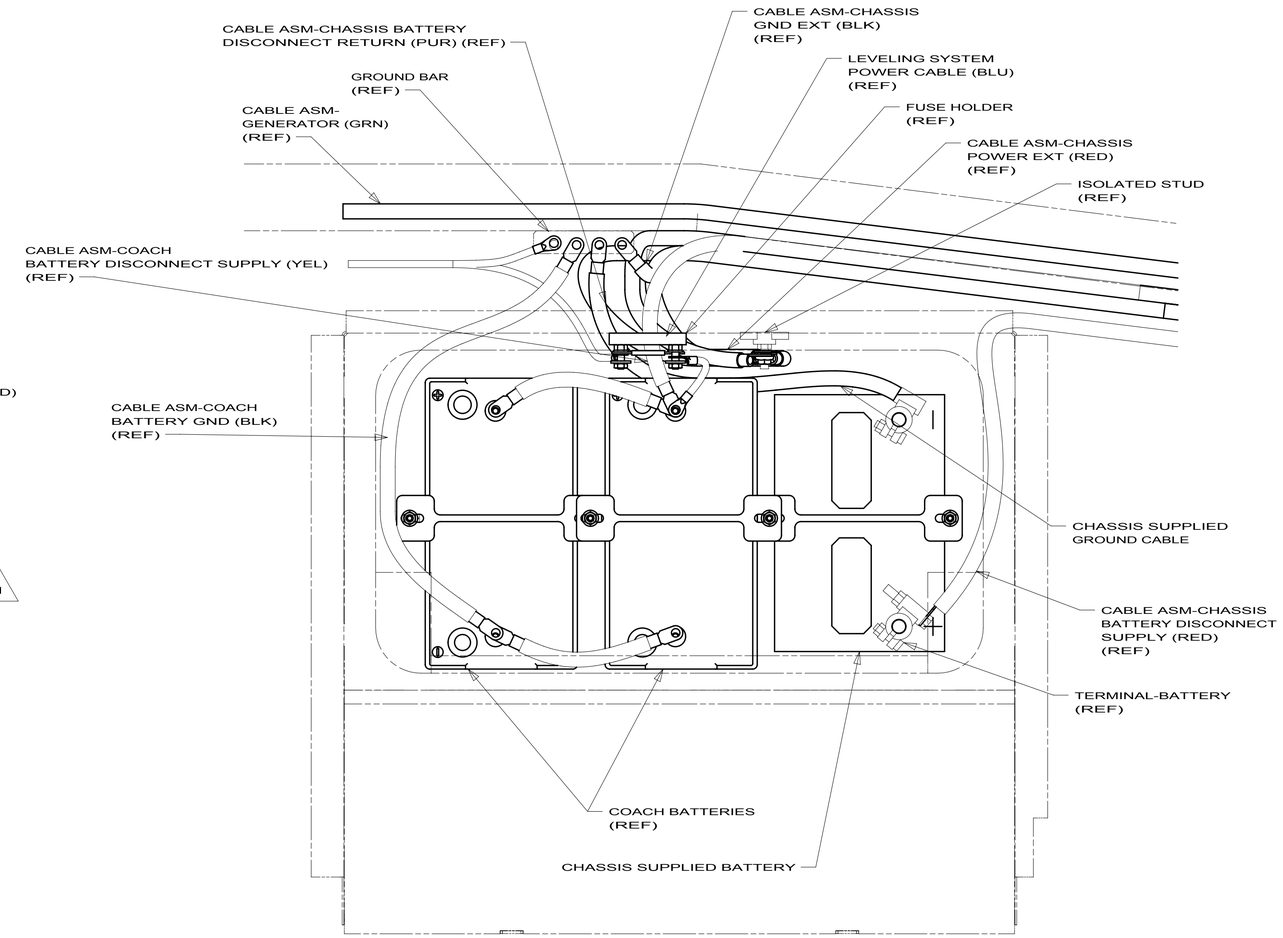

VIEW DB
(FORD)

265 CODES/STANDARDS-CSA/CMVSS

1B1 CODES/STANDARDS USA

1B1 265

1 ON D29R & D37L ONLY, DISCONNECT CHASSIS SUPPLIED CABLE AND REPLACE WITH CABLE ASM ON SHT 1. SECURE RING TERMINAL TO BATTERY USING SIDEPOST BOLT 166472-02-000.

NOTES:

FOR ELECTRICAL TORQUE SPECIFICATIONS SEE DWG NO. 128783-01-000

X-X FOR ELECTRICAL CALLOUTS SEE DWG NO. 121339-01-000

FIRST USED
10 D/E-SERIES

DO NOT SCALE DRAWING

TITLE:
BATTERY INSTL

SHEET 4 | PART NO 171129 | REV

10/5/2009

RELEASE	REV A	DATE	DWG NO 171140

REV	ZONE	REVISION RECORD	DATE	DFTR-ORIG

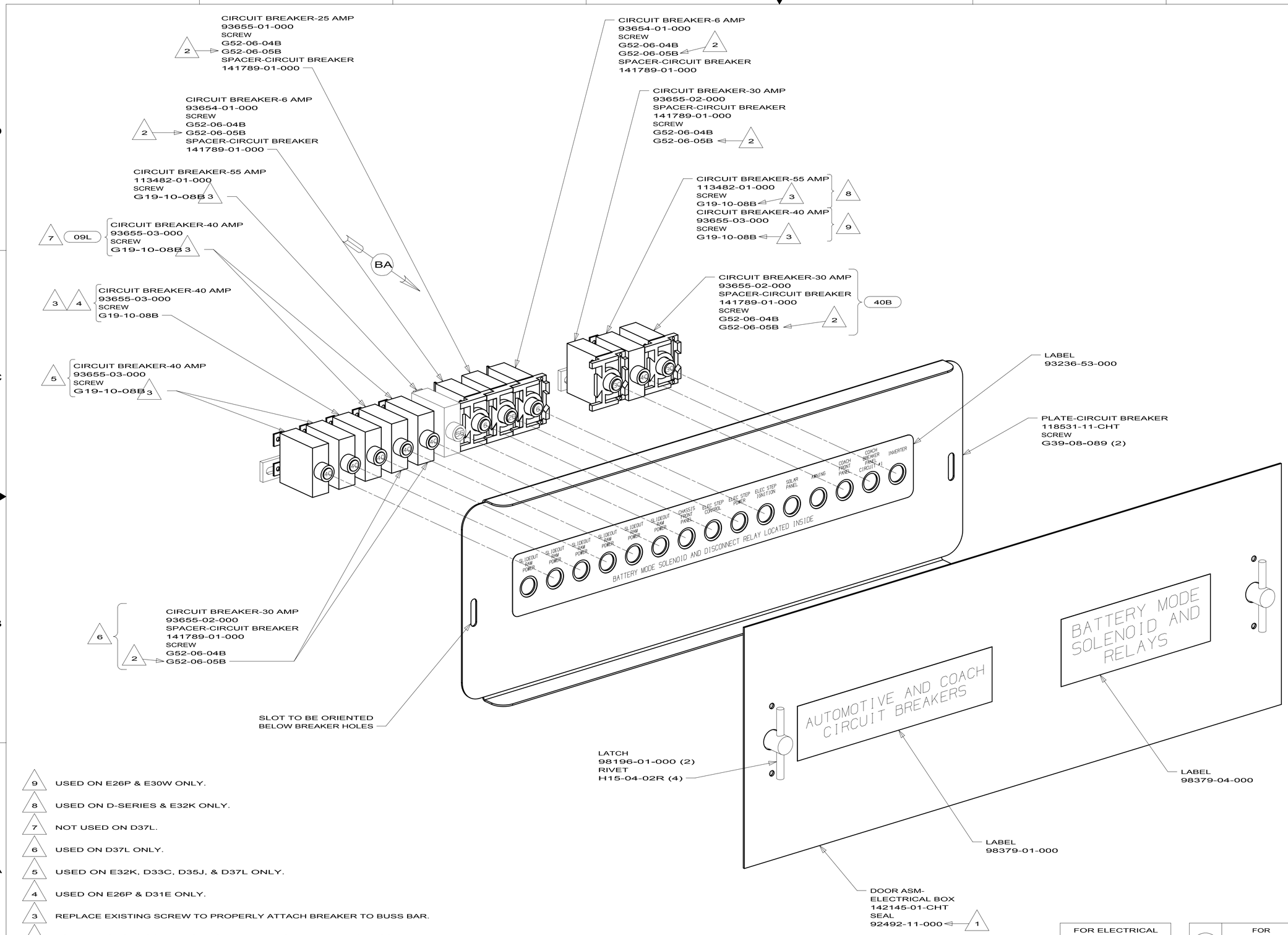

40B	INVERTER-DC/AC, 300 WATT
19D	SLIDEOUT ROOM REAR LEFTHAND
1D2	SLIDEOUT ROOM-REAR RIGHTHAND
09I	SLIDEOUT ROOM FRONT LEFT
265	CODES/STANDARDS-CSA/CMVSS
1B1	CODES/STANDARDS USA

1B1 265

9 USED ON E26P & E30W ONLY.

8 USED ON D-SERIES & E32K ONLY.

7 NOT USED ON D37L.

6 USED ON D37L ONLY.

5 USED ON E32K, D33C, D35J, & D37L ONLY.

4 USED ON E26P & D31E ONLY.

3 REPLACE EXISTING SCREW TO PROPERLY ATTACH BREAKER TO BUSS BAR.

2 USE THE LONGER SCREW TO PROPERLY ATTACH BREAKER TO BUSS BAR.

1 PLACE AROUND ENTIRE PERIMETER OF DOOR WITH SEAM AT BOTTOM.

NOTES:

FOR ELECTRICAL TORQUE SPECIFICATIONS SEE DWG NO. 128783-01-000

X-X FOR ELECTRICAL CALLOUTS SEE DWG NO. 121339-01-000

WINNEBAGO INDUSTRIES

COPYRIGHT 2009
WINNEBAGO
INDUSTRIES, INC.

DFTR	ORIG. DATE
CHKR	ALL DIMENSIONS ARE IN MILLIMETERS
P.E.	
M.E.	FIRST USED
DSNR	10 D&E-SER

UNSPECIFIED TOLERANCES ARE:

WHOLE DIM (X)	±	3
ONE-PLACE (X.X)	±	1.5
TWO-PLACE (X.XX)	±	0.50
ANGLE	±	1°

MATERIAL:

THIRD ANGLE PROJECTION

DO NOT SCALE DRAWING

TITLE: CHASSIS ELECTRICAL BOX ASM

SHEET 1 OF 2 | PART NO 171140 | REV

REF: 1

DWG NO 171140

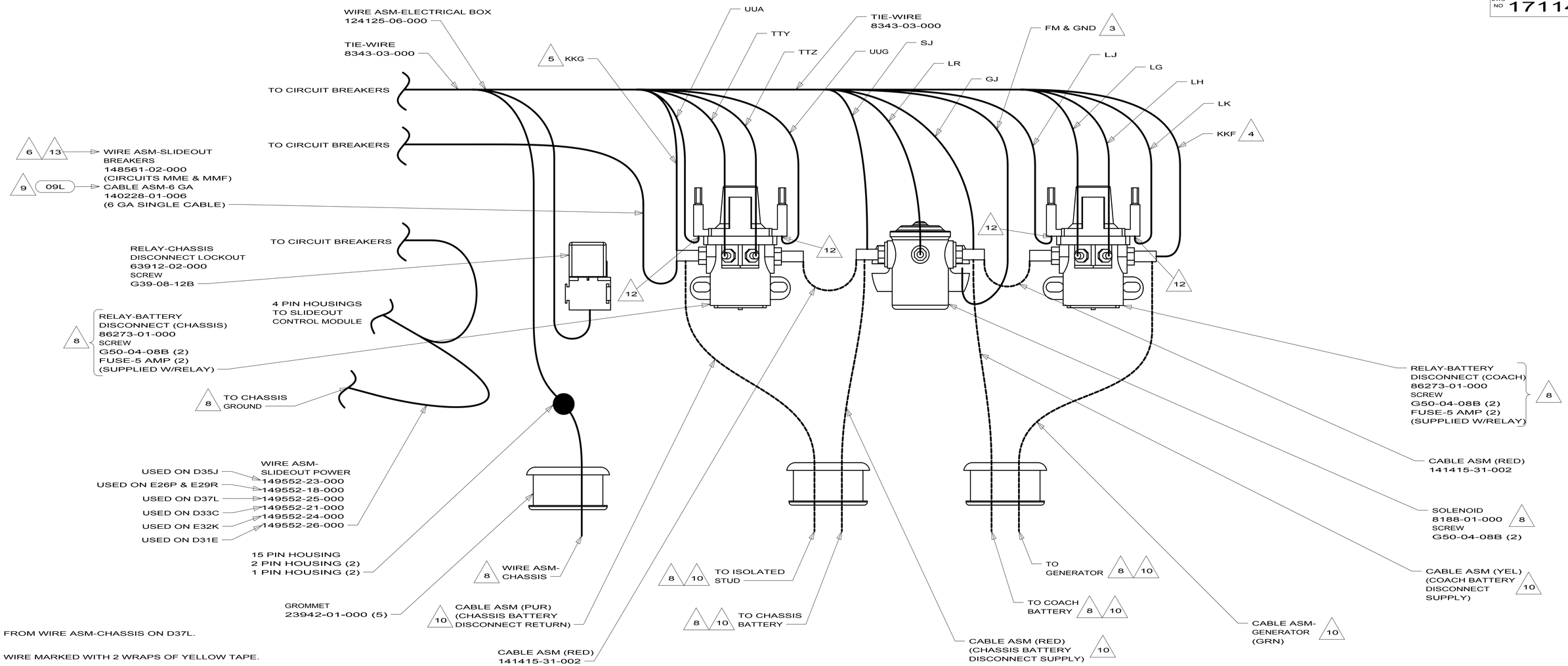

15 FROM WIRE ASM-CHASSIS ON D37L.

14 WIRE MARKED WITH 2 WRAPS OF YELLOW TAPE.

13 USED ON E32K, D35J, D37L, & D33C.

12 INSERT TERMINAL FROM CIRCUIT LJ, UUA, LK OR UUG INTO FUSE HOLDER ON RELAY-BATTERY DISCONNECT.

11 NOT USED ON E32K, D35J, OR D37L WITH 09L & 1D2 DUE TO THE UNIT HAVING DUAL REAR RAMS, RAMS. USE 09L ONLY BUSS BAR.

10 SEE BATTERY INSTL FOR ADDITIONAL INFORMATION.

9 NOT USED WITH 092 OR ON D33C, D35J, E31W, E32K, OR D37L.

8 SEE WIRING INSTL-CHASSIS FOR ADDITIONAL IFORMATION.

7 IF CIRCUIT NOT USED, TAPE BACK TO HARNESS.

6 WIRE MARKED WITH RED TAPE.

5 WIRE MARKED WITH PURPLE TAPE.

4 WIRE MARKED WITH YELLOW TAPE.

3 SECURE WITH SOLENOID MOUNTING SCREW.

2. SECURE CONDUIT 41953, TAB AS REQUIRED, OVER ALL WIRES IN CONTACT WITH SHARP EDGES.

1. LEGEND: WINNEBAGO CABLE: CHASSIS SUPPLIED WIRING.

NOTES:

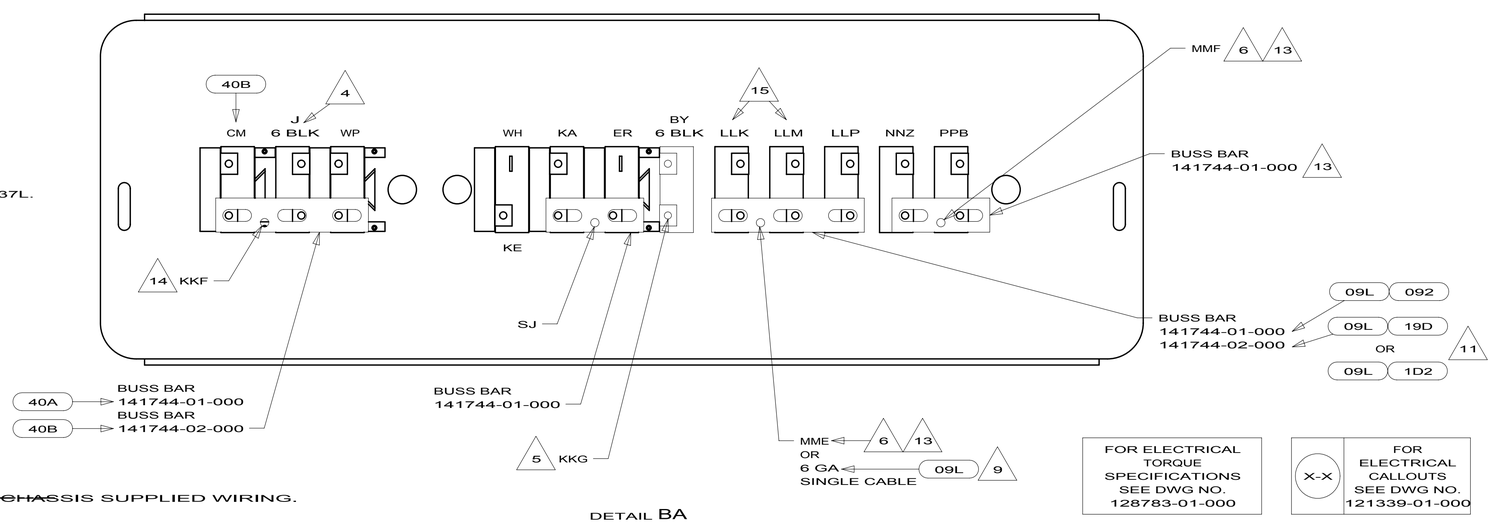

DETAIL BA

092	SLIDEOUT ROOM - FRONT RIGHT
40B	INVERTER-DC/AC, 300 WATT
40A	INVERTER-DC/AC WITHOUT
19D	SLIDEOUT ROOM REAR LEFTHAND
1D2	SLIDEOUT ROOM-REAR RIGHTHAND
09L	SLIDEOUT ROOM FRONT LEFT
265	CODES/STANDARDS - CSA/CMVSS
1B1	CODES/STANDARDS - USA

1B1 265

FOR ELECTRICAL TORQUE SPECIFICATIONS SEE DWG NO. 128783-01-000

X-X FOR ELECTRICAL CALLOUTS SEE DWG NO. 121339-01-000

FIRST USED 10 D&E-SER

DO NOT SCALE DRAWING

TITLE: CHASSIS ELECTRICAL BOX ASM

SHEET 2 | PART NO 171140 | REV

RELEASE	REV A	DATE	DWG NO 173248

REV	ZONE	REVISION RECORD	DATE	DFTR-ORIG

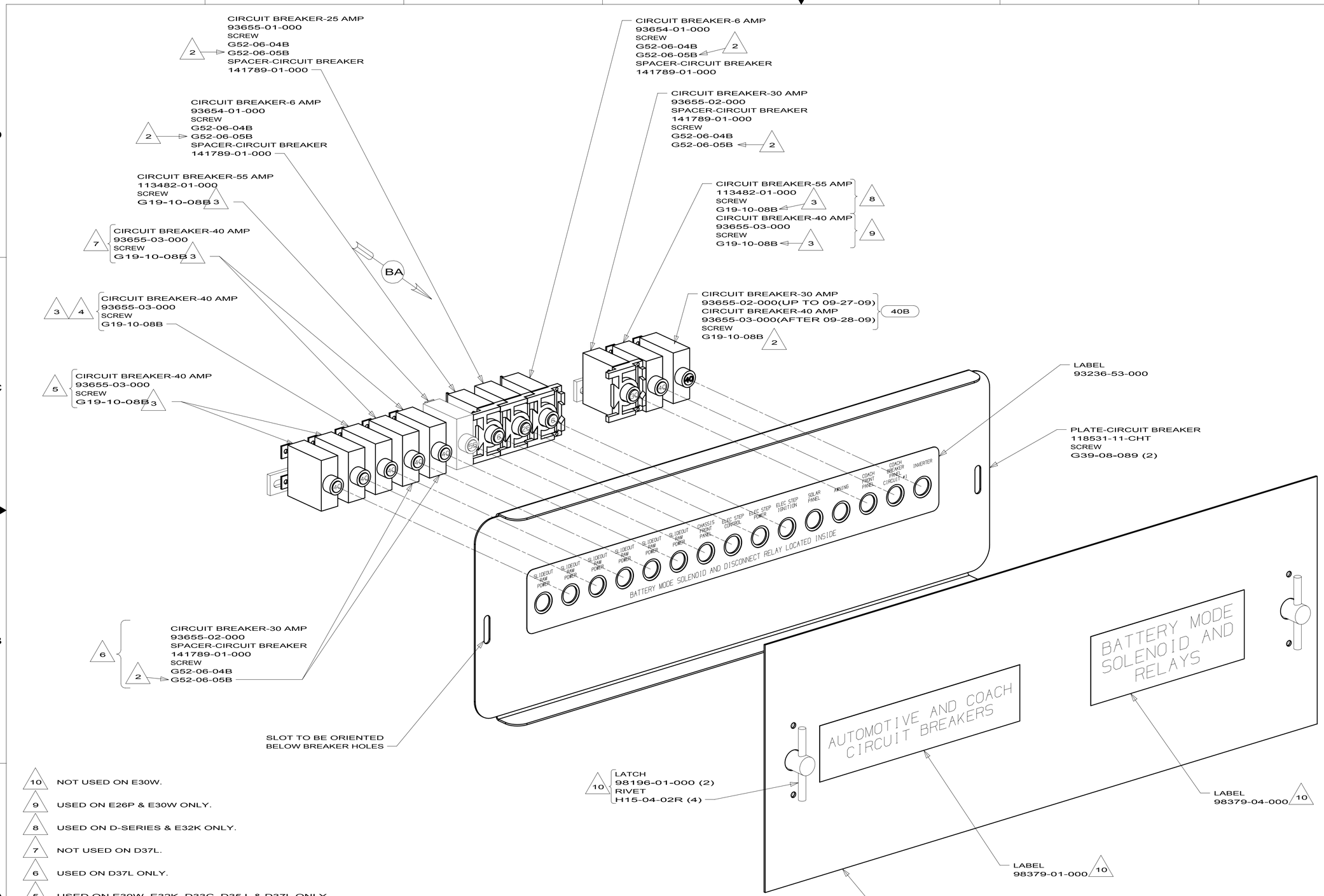

40B INVERTER-DC/AC, 300 WATT

265 CODES/STANDARDS-CSA/CMVSS

1B1 CODES/STANDARDS USA

10 NOT USED ON E30W.

9 USED ON E26P & E30W ONLY.

8 USED ON D-SERIES & E32K ONLY.

7 NOT USED ON D37L.

6 USED ON D37L ONLY.

5 USED ON E30W, E32K, D33C, D35J, & D37L ONLY.

4 USED ON E26P, D31E & D33C ONLY.

3 REPLACE EXISTING SCREW TO PROPERLY ATTACH BREAKER TO BUSS BAR.

2 USE THE LONGER SCREW TO PROPERLY ATTACH BREAKER TO BUSS BAR.

1 PLACE AROUND ENTIRE PERIMETER OF DOOR WITH SEAM AT BOTTOM.

NOTES:

FOR ELECTRICAL TORQUE SPECIFICATIONS SEE DWG NO. 128783-01-000

X-X FOR ELECTRICAL CALLOUTS SEE DWG NO. 121339-01-000

1B1 265

WINNEBAGO INDUSTRIES

COPYRIGHT 2009
WINNEBAGO
INDUSTRIES, INC.

DFTR	ORIG. DATE
CHKR	ALL DIMENSIONS ARE IN MILLIMETERS
P.E.	
M.E.	FIRST USED
DSNR	10 D&E,MOBAC

UNSPECIFIED TOLERANCES ARE:

WHOLE DIM (X)	±	3
ONE-PLACE (X.X)	±	1.5
TWO-PLACE (X.XX)	±	0.50
ANGLE	±	1°

MATERIAL:

THIRD ANGLE PROJECTION

DO NOT SCALE DRAWING

TITLE: CHASSIS ELECTRICAL BOX ASM

SHEET 1 OF 2 | PART NO 173248 | REV

REF: 1

10/1/2009

DWG NO 173248

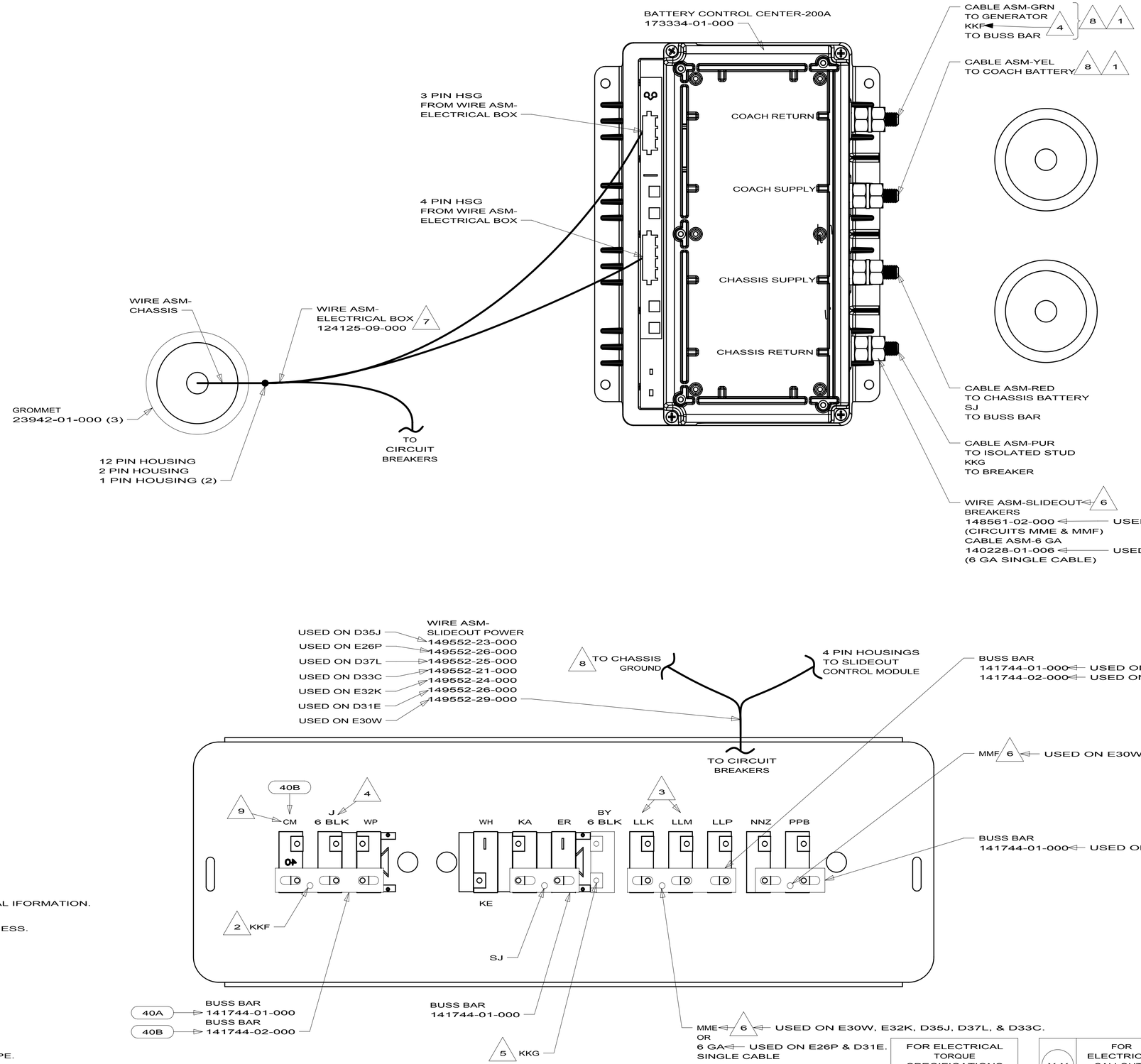

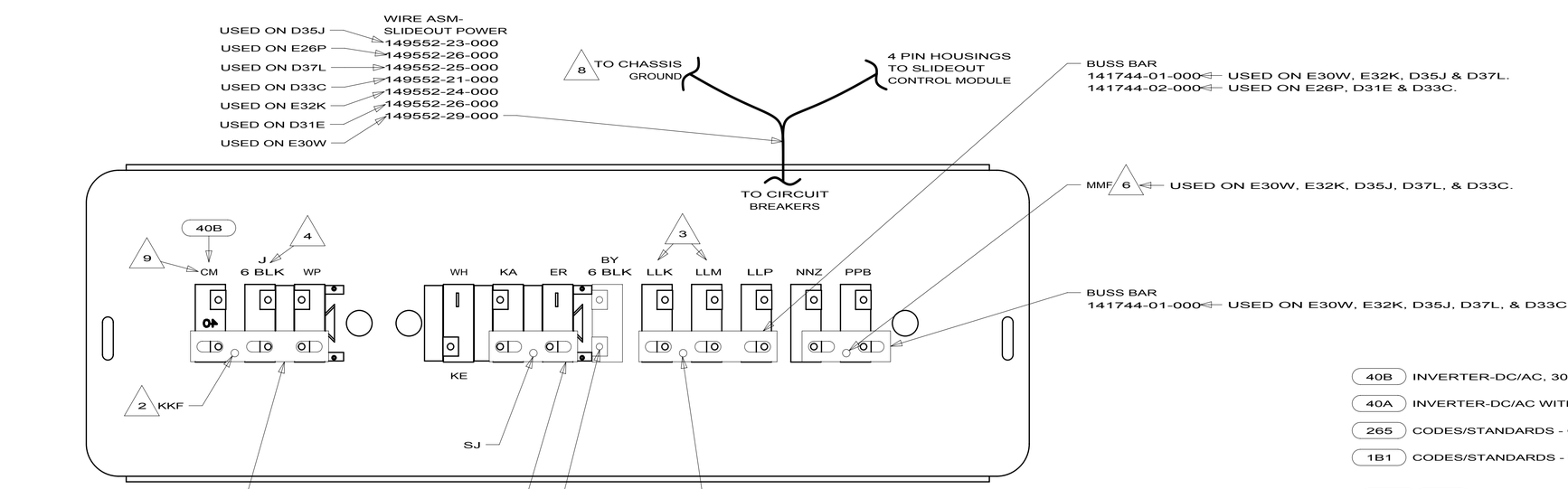

DETAIL BA

9	FROM WIRE ASM-CHASSIS.
8	SEE WIRING INSTL-CHASSIS FOR ADDITIONAL IFORMATION.
7	IF CIRCUIT NOT USED, TAPE BACK TO HARNESS.
6	WIRE MARKED WITH RED TAPE.
5	WIRE MARKED WITH PURPLE TAPE.
4	WIRE MARKED WITH YELLOW TAPE.
3	FROM WIRE ASM-CHASSIS ON D37L.
2	WIRE MARKED WITH 2 WRAPS OF YELLOW TAPE.
1	SEE BATTERY INSTL FOR ADDITIONAL INFORMATION.

NOTES:

40B	INVERTER-DC/AC, 300 WATT
40A	INVERTER-DC/AC WITHOUT
265	CODES/STANDARDS - CSA/CMVSS
1B1	CODES/STANDARDS - USA

1B1 265

FOR ELECTRICAL TORQUE SPECIFICATIONS SEE DWG NO. 128783-01-000

X-X FOR ELECTRICAL CALLOUTS SEE DWG NO. 121339-01-000

FIRST USED
10 D&E,MOBAC

DO NOT SCALE DRAWING

TITLE:
CHASSIS ELECTRICAL BOX ASM

SHEET 2 | PART NO 173248 | REV

10/1/2009

RELEASE	REV A	DATE	DWG NO 173691

REV	ZONE	REVISION RECORD	DATE	DFTR-ORIG

D-SERIES

		D31E	D33C	D35J	D37L	
CHASSIS BATTERY NEGATIVE JUMPER		----------	----------	----------	133568-11-008	
CHASSIS BATTERY POSITIVE JUMPER		----------	----------	----------	133568-01-008	
CHASSIS SUPPLIED GROUND CABLE		800	1800	800	1000	4
CHASSIS SUPPLIED POSITIVE CABLE CHASSIS BATTERY DISCONNECT SUPPLY (RED)		141417-32-026 3	141417-32-063 3	141417-32-026 3	1700 2	
CABLE ASM-STARTER (RED)		141417-36-038	141417-36-066	141417-36-036	141417-36-059	1
CABLE ASM-COACH BATTERY DISCONNECT SUPPLY (YEL)		141416-52-014	141416-52-051	141416-52-014	141416-52-039	
CABLE ASM-COACH BATTERY GND (BLK)		133567-12-008	133567-12-008	133567-12-008	133567-12-008	
CABLE ASM-CHASSIS BATTERY DISCONNECT RETURN (PUR)		141417-12-012	141417-12-053	141417-12-012	141417-12-040	
CABLE ASM-GENERATOR (GRN)		141415-42-092	141415-42-081	141415-42-098	141415-42-109	
LEVELING SYSTEM POWER CABLE (BLU)	60M	141415-22-037	141415-22-068	141415-22-033	141415-22-067	
LEVELING SYSTEM GND CABLE (BLK)	60M	133566-11-008	----------	133566-11-008	133566-11-008	
WIRE ASM-INVERTER	40D	----------	----------	----------	154845-01-025	

E-SERIES

		E30W	E32K	
CHASSIS BATTERY NEGATIVE JUMPER		133568-11-008	----	
CHASSIS BATTERY POSITIVE JUMPER		133568-01-008	----	
CHASSIS SUPPLIED GROUND CABLE		800	1300	4
CHASSIS SUPPLIED POSITIVE CABLE CHASSIS BATTERY DISCONNECT SUPPLY (RED)		1900	1700	2
CABLE ASM-STARTER (RED)		141417-36-046	141417-36-055	1
CABLE ASM-COACH BATTERY DISCONNECT SUPPLY (YEL)		141416-52-041	141416-52-034	
CABLE ASM-COACH BATTERY GND (BLK)		133567-12-008	133567-12-008	
CABLE ASM-CHASSIS BATTERY DISCONNECT RETURN (PUR)		141417-12-041	141417-12-030	
CABLE ASM-GENERATOR (GRN)		141415-42-089	141415-42-093	
CABLE ASM-GENERATOR GND (BLK)		133566-12-008	-----	
LEVELING SYSTEM POWER CABLE (BLU)	60M	141415-22-056	141415-22-053	
LEVELING SYSTEM GND CABLE (BLK)	60M	133566-11-008	133566-11-008	

NOTES:

4 LOCATE CHASSIS SUPPLIED GROUND CABLE; REDUCE LENGTH TO DIMENSION IN COLUMN AND ADD TERMINAL 113738-01-000 TO THE CUT END (1800MM CHASSIS SUPPLIED LENGTH).

3 SEE DETAIL DA FOR CONNECTORS INFORMATION.

2 LOCATE CHASSIS SUPPLIED POSITIVE CABLE; REDUCE LENGTH TO DIMENSION IN COLUMN AND ADD TERMINAL 113738-01-000 TO THE CUT END (2500MM CHASSIS SUPPLIED LENGTH)

1 BATTERY CABLES MUST BE INSTALLED TO STARTER MOTOR BEFORE ENGINE WIRING HARNESS AND ROUTED IN SUCH A MANNER AS TO PREVENT ANY POSSIBLE DEGRADATION FROM THE EXHUAST SYSTEM.

FOR ELECTRICAL TORQUE SPECIFICATIONS SEE DWG NO. 128783-01-000

X-X FOR ELECTRICAL CALLOUTS SEE DWG NO. 121339-01-000

40D INVERTER-DC/AC,600 WATT
64H HYDRAULIC LEVELING JACKS
60M HYDRAULIC LEVEL JACKS-AUTO
265 CODES/STANDARDS-CSA/CMVSS
1B1 CODES/STANDARDS USA

1B1 265

WINNEBAGO INDUSTRIES

COPYRIGHT 2009
WINNEBAGO
INDUSTRIES, INC.

DFTR	ORIG. DATE
CHKR	ALL DIMENSIONS ARE IN MILLIMETERS
P.E.	
M.E.	FIRST USED
DSNR	10 D/E-SERIES

UNSPECIFIED TOLERANCES ARE:

WHOLE DIM (X)	±	3
ONE-PLACE (X.X)	±	1.5
TWO-PLACE (X.XX)	±	0.50
ANGLE	±	1°

MATERIAL:

THIRD ANGLE PROJECTION

DO NOT SCALE DRAWING

TITLE: BATTERY INSTL,WH DIESEL

SHEET 1 OF 4 | PART NO 173691 | REV

REF: 1

DWG NO 173691

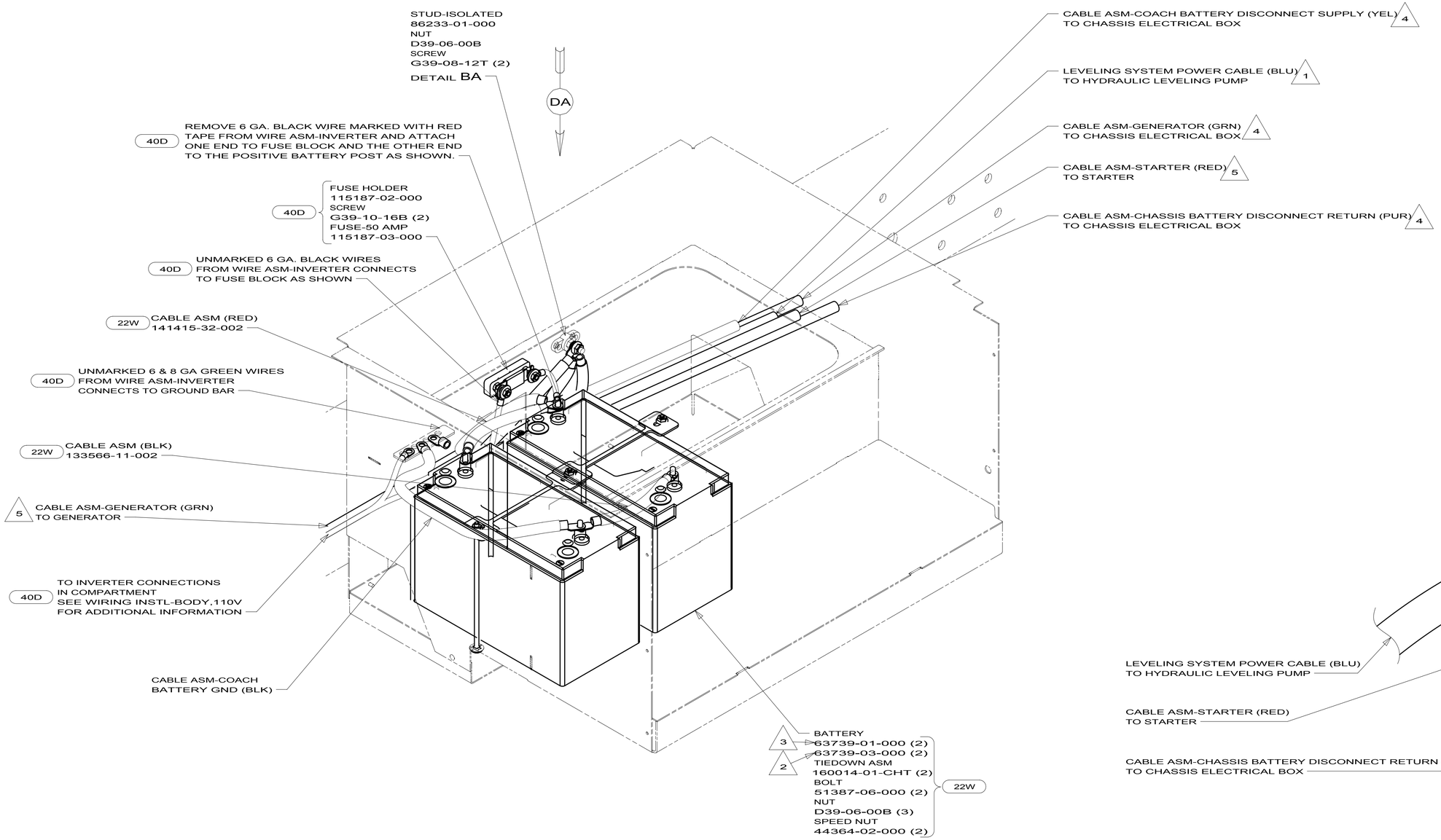

COACH BATTERY BOX

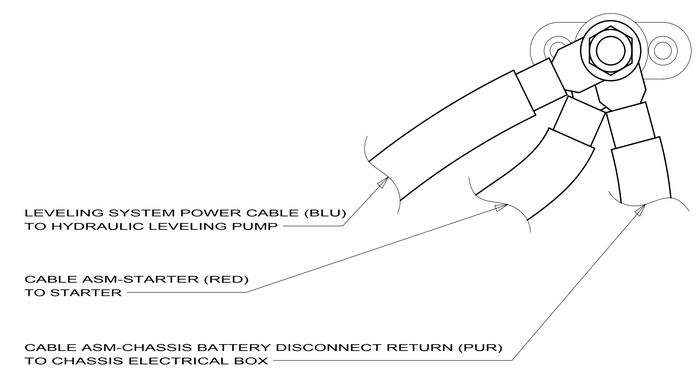

DETAIL BA

40D INVERTER-DC/AC,600 WATT

22W BATTERY-SECOND

265 CODES/STANDARDS-CSA/CMVSS

1B1 CODES/STANDARDS USA

NOTES:

5 SEE WIRING INSTL-CHASSIS FOR ADDITIONAL INFORMATION.

4 SEE CHASSIS ELECTRICAL BOX ASM FOR ADDITIONAL INFORMATION.

3 USED ON E-SERIES ONLY.

2 USED ON D-SERIES ONLY.

1 SEE LEVELING SYSTEM INSTL FOR ADDITIONAL INFORMATION.

FOR ELECTRICAL TORQUE SPECIFICATIONS SEE DWG NO. 128783-01-000

X-X FOR ELECTRICAL CALLOUTS SEE DWG NO. 121339-01-000

1B1 265

FIRST USED

10 D/E-SERIES

DO NOT SCALE DRAWING

TITLE: BATTERY INSTL,WH DIESEL

SHEET 2 | PART NO 173691 | REV

DWG NO 173691

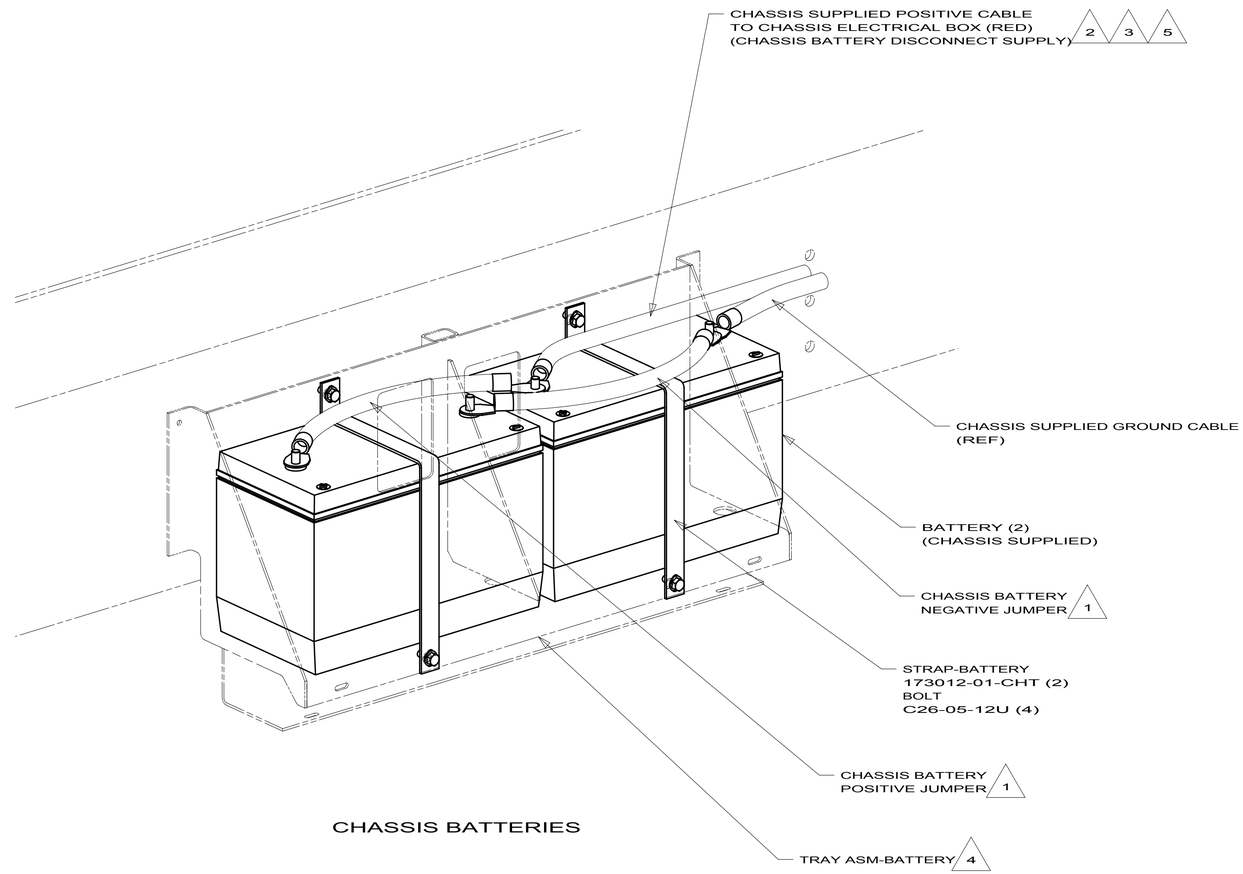

CHASSIS BATTERIES

NOTES:

5 ON D31E, D33C, & D35J; DISCONNECT CHASSIS SUPPLIED CABLE AND REPLACE WITH CABLE ASM ON SHEET 1. SECURE RING TERMINAL TO BATTERY USING SIDEPOST BOLT 166472-02-000.

4 SEE FRAME ASM-CHASSIS FOR ADDITIONAL INFORMATION.

3 SEE WIRING INSTL-CHASSIS FOR ADDITIONAL INFORMATION.

2 SEE CHASSIS ELECTRICAL BOX ASM FOR ADDITIONAL INFORMATION.

1 SUPPLIED WITH CHASSIS. ON E30W & D37L CHASSIS BATTERIES ARE SEPERATED. REFER TO SHT 1 FOR CABLE ASM CALLOUT.

265 CODES/STANDARDS-CSA/CMVSS

1B1 CODES/STANDARDS USA

FOR ELECTRICAL TORQUE SPECIFICATIONS SEE DWG NO. 128783-01-000

X-X FOR ELECTRICAL CALLOUTS SEE DWG NO. 121339-01-000

1B1 265

FIRST USED 10 D/E-SERIES

DO NOT SCALE DRAWING

TITLE: BATTERY INSTL,WH DIESEL

SHEET 3 | PART NO 173691 | REV

DWG NO 173691

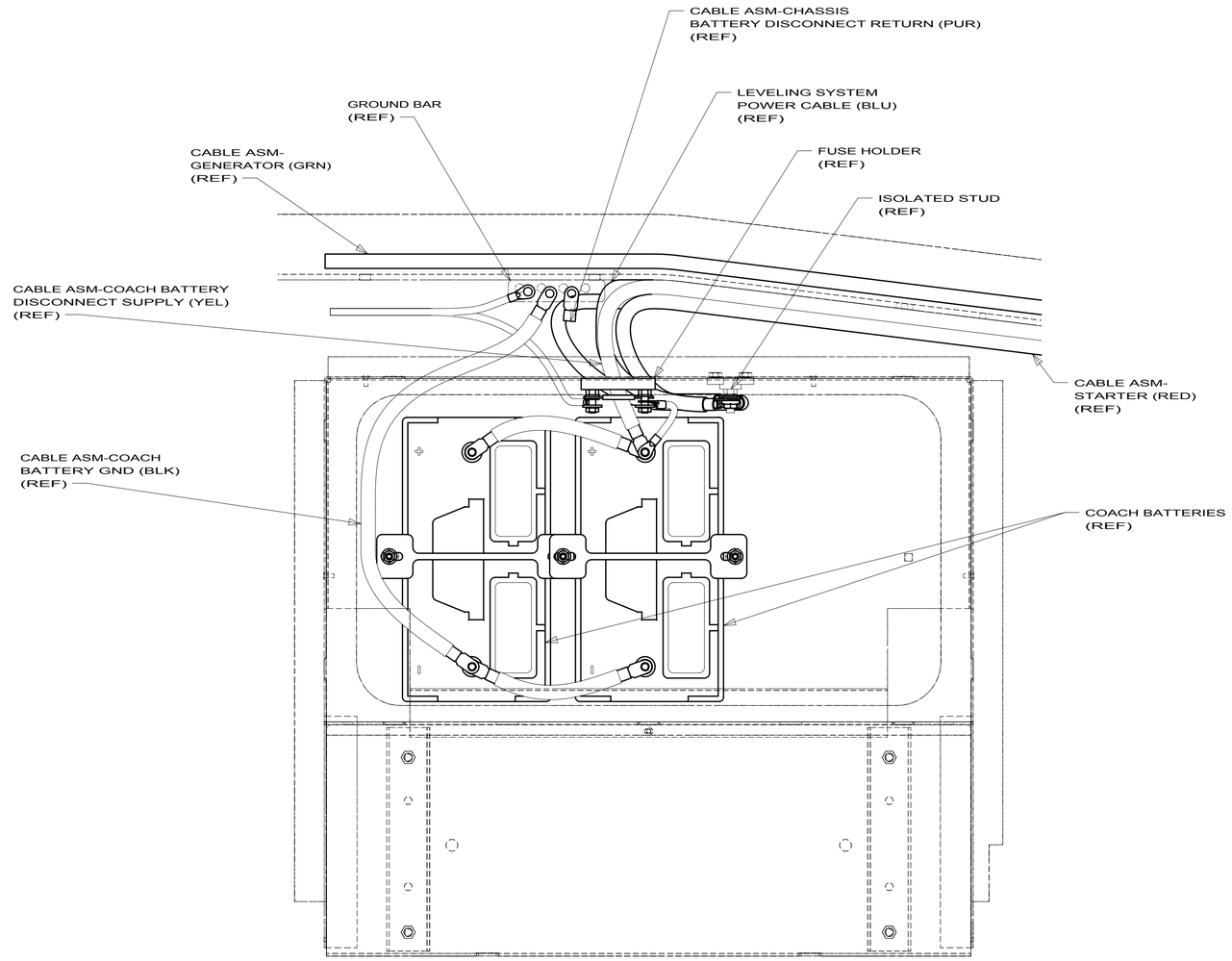

VIEW DA
(COACH BATTERIES)

265 CODES/STANDARDS-CSA/CMVSS

1B1 CODES/STANDARDS USA

1B1 265

FIRST USED

10 D/E-SERIES

DO NOT SCALE DRAWING

TITLE:

BATTERY INSTL,WH DIESEL

SHEET 4

PART NO 173691

REV

FOR ELECTRICAL TORQUE SPECIFICATIONS SEE DWG NO. 128783-01-000

X-X

FOR ELECTRICAL CALLOUTS SEE DWG NO. 121339-01-000

RELEASE	REV A	DATE	DWG NO 121339

REV	ZONE	REVISION RECORD	DATE	DFTR-ORIG

TERMINALS

NO.	PART NUMBER	DESCRIPTION
B-1	50003-01	TERMINAL-PIN, 16-14 GA,.156 DIA
B-2	50004-01	TERMINAL-RECP, 16-14 GA,.156 DIA
B-11	50003-02	TERMINAL-PIN, 16-14 GA,.180 DIA
B-12	50004-02	TERMINAL-RECP, 16-14 GA,.180 DIA
WP-1	106950-01	TERMINAL-PIN, 16-14 GA
WP-2	106950-02	TERMINAL-PIN, 10-12 GA
WP-3	106950-03	TERMINAL-PIN, 8 GA
R-1	35416-01	TERMINAL-RING, #10 STD, 8 GA
R-2	35416-02	TERMINAL-RING, #10 STD, 6 GA
R-3	35416-03	TERMINAL-RING, #10 STD, 10-12 GA
R-4	35416-04	TERMINAL-RING, #10 STD, 14-16 GA
R-5	37018-01	TERMINAL-RING, 5/16 STD, 12-10 GA
R-6	102777-01	TERMINAL-RING, #6 STD, 14-16 GA
R-7	102777-02	TERMINAL-RING, #6 STD, 10-12 GA
R-8	102777-03	TERMINAL-RING, #6 STD, 8 GA
R-9	33787-01	TERMINAL-RING, #10 STD, 14 GA
R-60	8325-01	TERMINAL-RING, 1/4 STD, 14-16 GA
R-61	8326-01	TERMINAL-RING, 3/8 STD, 14-16 GA
R-62	8327-01	TERMINAL-RING, #10 STD, 14-16 GA
R-63	8328-01	TERMINAL-RING, #10 STD, 10-12 GA
R-64	8328-02	TERMINAL-RING, 3/8 STD, 10-12 GA
R-65	8329-01	TERMINAL-RING, 3/8 STD, 8 GA
R-66	8331-01	TERMINAL-RING, 3/8 STD, 4 GA
R-67	8332-01	TERMINAL-RING, 1/4 STD, 6 GA
R-68	8332-02	TERMINAL-RING, 1/4 STD, 10 GA
R-69	8350-01	TERMINAL-RING, 3/8 STD, 6 GA
R-70	99275-02	TERMINAL-RING, 7/16 STD, 8 GA
R-71	101397-01	TERMINAL-RING, #10 STD, 14-16 GA
R-91	88791-01	TERMINAL-RING, 3/8, 90°, 1/0 GA
R-92	88791-02	TERMINAL-RING, 3/8, 90°, 2 GA
R-93	8348-01	TERMINAL-RING, 3/8 STD, 2 GA
R-94	99275-01	TERMINAL-RING, 7/16 STD, 1/0 GA
RF-51	7944-01	TERMINAL-SPADE, 12-10 GA, #8 STUD
RF-52	7945-01	TERMINAL-SPADE, 18-14 GA, #8 STUD
TR-1	47443-01	TERMINAL-RECP, 16-14 GA,.25, INS
TR-2	47443-02	TERMINAL-RECP, 12-10 GA,.25, INS
TR-3	47443-05	TERMINAL-RECP, 22-18 GA,.25, INS
TR-11	47443-03	TERMINAL-RECP, 16-14 GA,.19, INS
TR-12	47443-04	TERMINAL-RECP, 16-14 GA,.11, INS
TR-21	80015-01	TERMINAL-RECP, 22-18 GA,.250, 90 DEG FOR USE WITH TAB THICKNESS .032
TR-22	80015-02	TERMINAL-RECP, 16-14 GA,.187, 90 DEG FOR USE WITH TAB THICKNESS .032
TR-23	80015-03	TERMINAL-RECP, 16-14 GA,.250, 90 DEG FOR USE WITH TAB THICKNESS .032
TR-24	80015-04	TERMINAL-RECP, 16-14 GA,.187, 90 DEG FOR USE WITH TAB THICKNESS .020
TR-51	7940-01	TERMINAL-RECP, 16-12 GA,.25, UNINS
TR-52	23809-01	TERMINAL-RECP, 16-14 GA,.19, UNINS
TR-53	23809-02	TERMINAL-RECP, 18-20 GA,.25, UNINS
TR-54	49270-01	TERMINAL-RECP, 18-20 GA,.19, UNINS
TR-55	7940-02	TERMINAL-RECP, 10 GA, .25, UNINS
TT-1	85745-02	TERMINAL-TAB, 16-14 GA,.25, INS
TT-2	85745-03	TERMINAL-TAB, 10-12 GA,.25, INS
TT-11	85745-04	TERMINAL-TAB, 18-22 GA,.19, INS
TT-51	7942-01	TERMINAL-TAB, 16-14 GA,.25, UNINS
TT-52	7943-01	TERMINAL-TAB, 14-10 GA,.25, UNINS
MF6-1	129236-01	TERMINAL-FEM, M/P, 630, 10-12
MF6-2	129236-02	TERMINAL-FEM, M/P, 630, 14-16

SPLICES

NO.	PART NUMBER	DESCRIPTION
BS-1	31876-01	SPLICE-BUTT, 16-14 GA, BLUE
BS-2	31876-02	SPLICE-BUTT, 12-10 GA, YELLOW
BS-3	31876-03	SPLICE-BUTT, 22-18 GA, RED
BS-SB	100070-01	SPLICE-BUTT, 14-16 GA, SHRINK,BLUE
BS-RB	112823-01	SPLICE-BUTT, 14-22 GA, REDUCER
BS-RS	173854-01	SPLICE-BUTT, 14-22 GA, REDUCER, SHRINK
S-1	7946-01	SPLICE, 1-6 MM²
S-2	23808-01	SPLICE, 6-9 MM²
I-2	7956-02	SHRINK WRAP .375 DIA
I-5	7956-05	SHRINK WRAP .25 DIA
SH-1	58028-01	SPLICE-HAT
S-10	101173-01	SPLICE-BARREL, 26300 CMA

NO.	PART NUMBER	DESCRIPTION
SP-1	90986-02	PLUG ASM-ELECTRIC STEP
SP-2	142524-01-000	HOUSING-4 PIN
	098261-01-000	SOCKET-CONNECTOR
	098262-07-000	SEAL-CONNECTOR
	098261-02-000 (3)	SOCKET-CONNECTOR
	098262-01-000 (3)	SEAL-CONNECTOR
HR-1	63910-01	HOUSING-RELAY
MP-8	125323-02	HOUSING-PIN, 8 CAVITY
MP-10	125323-01	HOUSING-PIN, 10 CAVITY
MPP	125324-01	TERMINAL-MALE, M/P, 150
CAV-1	125325-01	SEAL-CAVITY, 150-SERIES M/P
CON-3	98262-03	SEAL-CONNECTOR
LS-8	125323-03	LOCK-SECONDARY 8 POSITION
LS-10	125323-04	LOCK-SECONDARY 10 POSITION
H-8	108355-01	HOUSING-SWITCH, 8 POSITION
H-12	108355-02	HOUSING-SWITCH, 12 POSITION

NO.	PART NUMBER	DESCRIPTION
GEN-1	125323-02-000	HOUSING-8 POSN, MALE ,150 SERIES
	125324-01-000 (4)	TERMINAL-MALE, M/P, 150
	098262-03-000 (4)	SEAL-CONNECTOR
	125325-01-000 (4)	SEAL-CAVITY, 150 SERIES M/P
	125323-03-000	LOCK-SECONDARY 8 POSITION
GEN-2	125323-01-000	HOUSING-10 POSN, MALE ,150 SERIES
	125324-01-000 (5)	TERMINAL-MALE, M/P, 150
	098262-03-000 (5)	SEAL-CONNECTOR
	125325-01-000 (5)	SEAL-CAVITY, 150 SERIES M/P
	125323-04-000	LOCK-SECONDARY 10 POSITION

HOUSINGS AND TERMINALS

NO.	PART NUMBER	DESCRIPTION
HS-2	88474-10	HOUSING-SOCKET, 2 CAVITY
HS-3	88474-09	HOUSING-SOCKET, 3 CAVITY
HS-4	88474-08	HOUSING-S0CKET, 4 CAVITY
HS-5	88474-07	HOUSING-SOCKET, 5 CAVITY
HS-6	88474-06	HOUSING-SOCKET, 6 CAVITY
HS-7	88474-05	HOUSING-SOCKET, 6 CAVITY-IN LINE
HS-9	88474-03	HOUSING-SOCKET, 9 CAVITY
HS-12	88474-01	HOUSING-SOCKET, 12 CAVITY
HS-15	88474-02	HOUSING-SOCKET, 15 CAVITY
HS-2-R	88474-12	HOUSING-SOCKET, 2 CAVITY-RED
HP-2	88473-10	HOUSING-PIN, 2 CAVITY
HP-3	88473-09	HOUSING-PIN, 3 CAVITY
HP-4	88473-08	HOUSING-PIN, 4 CAVITY
HP-5	88473-07	HOUSING-PIN, 5 CAVITY
HP-6	88473-06	HOUSING-PIN, 6 CAVITY
HP-7	88473-05	HOUSING-PIN, 6 CAVITY-IN LINE
HP-8	88473-04	HOUSING-PIN, 8 CAVITY-IN LINE
HP-9	88473-03	HOUSING-PIN, 9 CAVITY
HP-12	88473-01	HOUSING-PIN, 12 CAVITY
HP-15	88473-02	HOUSING-PIN, 15 CAVITY
HP-2-R	88473-15	HOUSING-PIN, 2 CAVITY-RED
HP-3-B	88473-12	HOUSING-PIN, 3 CAVITY-BLUE
HP-3-G	88473-13	HOUSING-PIN, 3 CAVITY-GREEN
HP-3-R	88473-14	HOUSING-PIN, 3 CAVITY-RED
TS-1	88476-01	SOCKET-CONNECTOR, 20-14 GA
TS-2	88476-02	SOCKET-CONNECTOR, 12-10 GA
TP-1	88475-01	PIN-CONNECTOR, 20-14 GA
TP-2	88475-02	PIN-CONNECTOR, 12-10 GA
HS2HA	137208-01	HOUSING-SOCKET, 2 CAVITY-HIGH AMP
HP2HA	137207-01	HOUSING-PIN, 2 CAVITY-HIGH AMP
TS-HA	137210-01	SOCKET-CONNECTOR, 10AWG HIGH AMP
TP-HA	137209-01	PIN-CONNECTOR, 10AWG HIGH AMP
H-HA	104100-01	HOUSING, 1 CAVITY 75 AMP
T-HA	104100-03	TERMINAL 10 AWG - 6 AWG 75 AMP

BALLOON CALLOUT LEGEND

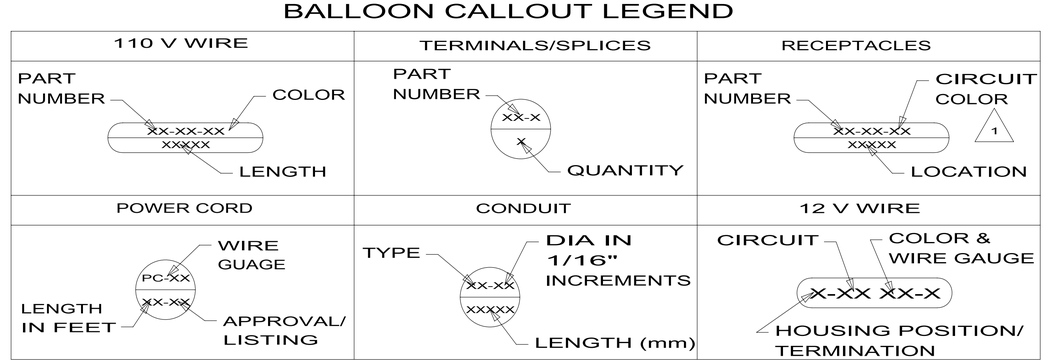

1 FOR RECP-BLANK, DET-X DENOTES DETAIL VIEW.

2 CONTACT WIRE PREP PRIOR TO USING FOR TOOLING PURPOSES.

NOTES:

WINNEBAGO INDUSTRIES
COPYRIGHT 2010 WINNEBAGO INDUSTRIES, INC.

DFTR | ORIG. DATE
CHKR | ALL DIMENSIONS ARE IN MILLIMETERS
P.E.
M.E. | FIRST USED
DSNR | 96 MH'S

UNSPECIFIED TOLERANCES ARE:
WHOLE DIM (X) :
ONE-PLACE (X.X) :
TWO-PLACE (X.XX) :
ANGLE :
THIRD ANGLE PROJECTION
MATERIAL:

DO NOT SCALE DRAWING

TITLE: PART LISTING-ELECTRICAL

SHEET 1 OF 7 | PART NO 121339 | REV

REF: 1

2/16/2010

DWG NO 121339

WIRE-SINGLE INS CONDUCTOR, STRANDED

NO.	PART NUMBER	DESCRIPTION
18-W 18-Y	156658-01 156658-02	WIRE, 18 GA. WHITE, PVC WIRE, 18 GA. YELLOW, PVC
16-Y 16-W	89360-01 89360-02	WIRE, 16 GA. YELLOW, PVC WIRE, 16 GA. WHITE, PVC
14-Y 14-W	48554-02 48554-04	WIRE, 14 GA. YELLOW, PVC WIRE, 14 GA. WHITE, PVC
12-Y 12-W	48555-02 48555-04	WIRE, 12 GA. YELLOW, PVC WIRE, 12 GA. WHITE, PVC
10-Y 10-W	8000-03 8000-05	WIRE, 10 GA. YELLOW, PVC WIRE, 10 GA. WHITE, PVC
8-B 8-G	8005-01 8005-03	WIRE, 8 GA. BLACK, PVC WIRE, 8 GA. GREEN, PVC
6-B 6-G	70065-01 70065-03	WIRE, 6 GA. BLACK, PVC WIRE, 6 GA. GREEN, PVC
18-WX 18-YX	121015-01 121015-02	WIRE, 18 GA. WHITE, XLPE WIRE, 18 GA. YELLOW, XLPE
16-YX 16-WX	116675-01 116675-02	WIRE, 16 GA. YELLOW, XLPE WIRE, 16 GA. WHITE, XLPE
14-YX 14-WX	98586-01 98586-02	WIRE, 14 GA. YELLOW, XLPE WIRE, 14 GA. WHITE, XLPE
12-YX 12-WX	98609-01 98609-02	WIRE, 12 GA. YELLOW, XLPE WIRE, 12 GA. WHITE, XLPE
10-YX 10-WX	116676-03 116676-04	WIRE, 10 GA. YELLOW, XLPE WIRE, 10 GA. WHITE, XLPE
8-BX 8-GX	116674-01 116674-02	WIRE, 8 GA. BLACK, XLPE WIRE, 8 GA. GREEN, XLPE
6-BX 6-GX	116687-01 116687-02	WIRE, 6 GA. BLACK, XLPE WIRE, 6 GA. GREEN, XLPE

WIRE-NM SHEATHED CABLE

NO.	PART NUMBER	DESCRIPTION
14 UL	8027-01-000	WIRE 14-2 ROMEX W/GROUND (UL)
14 CA	8023-02-000	WIRE 14-2 ROMEX W/GROUND (CAN)
12 UL	8026-01-000	WIRE 12-2 ROMEX W/GROUND (UL)
12 CA	8023-01-000	WIRE 12-2 ROMEX W/GROUND (CAN)
12-3 UL	8026-03-000	WIRE 12-3 ROMEX W/GROUND (UL)
12-3 CA	8023-03-000	WIRE 12-3 ROMEX W/GROUND (CAN)
10 UL	8022-01-000	WIRE 10-2 ROMEX W/GROUND (UL)
10 CA	24743-01-000	WIRE 10-2 ROMEX W/GROUND (CAN)
6-3 UL	108914-01-000	WIRE 6-3 ROMEX W/GROUND (UL)
6-3 CA	113136-01-000	WIRE 6-3 ROMEX W/GROUND (CAN)
6-2 UL	108914-02-000	WIRE 6-2 ROMEX W/GROUND (UL)
4-3 UL	128375-01-000	WIRE 4-3 ROMEX W/GROUND (UL)
4-3 CA	128375-01-000	WIRE 4-3 ROMEX W/GROUND (CAN)

CONDUIT

NO.	PART NUMBER	DESCRIPTION	TEMP.
C-4	41953-07-000	CONDUIT-CONVOLUTE,SLIT .25"ID	194° F
C-6	41953-06-000	CONDUIT-CONVOLUTE,SLIT .38"ID	194° F
C-8	41953-01-000	CONDUIT-CONVOLUTE,SLIT .50"ID	194° F
C-10	41953-02-000	CONDUIT-CONVOLUTE,SLIT .63"ID	194° F
C-16	41953-03-000	CONDUIT-CONVOLUTE,SLIT 1.0"ID	194° F
C-24	41953-08-000	CONDUIT-CONVOLUTE,SLIT 1.5"ID	194° F
C-32	41953-15-000	CONDUIT-CONVOLUTE,SLIT 2.0"ID	194° F
CX-8	41953-09-000	CONDUIT-CONVOLUTE,SLIT .50"ID	239° F
CX-12	41953-10-000	CONDUIT-CONVOLUTE,SLIT .75"ID	239° F
CX-16	41953-11-000	CONDUIT-CONVOLUTE,SLIT 1.0"ID	239° F
CX-20	41953-13-000	CONDUIT-CONVOLUTE,SLIT 1.25"ID	239° F
CX-24	41953-14-000	CONDUIT-CONVOLUTE,SLIT 1.50"ID	239° F
CX-32	41953-16-000	CONDUIT-CONVOLUTE,SLIT 2.0"ID	239° F
CN-10	41953-05-000	CONDUIT-CONVOLUTE,NOT SLIT .63"ID	194° F
CN-16	41953-12-000	CONDUIT-CONVOLUTE,NOT SLIT 1.0"ID	194° F

POWER CORDS

NO.	PART NUMBER	DESCRIPTION
PC-10/28	8054-01-000	POWER CORD 10 GA, 30 AMP, 28 FT. (UL/CA)
PC-10/35	8054-02-000	POWER CORD 10 GA, 30 AMP, 35 FT. (UL/CA)
PC-10/30-CA	8052-01-000	SUPERCEEDED BY 8054-01-000
PC-6/36	108934-01-000	POWER CORD 6 GA, 50 AMP, 36 FT. (UL/CA)
PC-6/36-FX	108934-02-000	POWER CORD 6 GA, 50 AMP, 36 FT. (UL/CSA) SUPERFLEX
PC-6/36-CA	113096-01-000	SUPERCEEDED BY 108934-02-000

BATTERY CABLE LEGEND

COLOR	DESCRIPTION
PURPLE	CHASSIS BATTERY TO SOLENOID
BLUE	HYDRAULIC JACKS PUMP
RED	BATTERY TO STARTER
GREEN	BATTERY TO GENERATOR
YELLOW	COACH BATTERY TO SOLENOID

RECEPTACLES(UP TO 01-24-10)

NO.	PART NUMBER	DESCRIPTION
RCP-1	172839-02-CHT	RECEPTACLE-SINGLE, FLUSH MOUNT
RCP-2	172839-01-CHT	RECEPTACLE-DOUBLE, FLUSH MOUNT
RCP-3	58707-01-000	RECEPTACLE-SINGLE, SURFACE MOUNT
RCP-4	157360-01-000	RECEPTACLE-SINGLE,SURFACE MOUNT,20A
RCP-5	160984-01-CHT	RECEPTACLE-SINGLE,FLUSH MOUNT,20A
RCP-B	58707-02-000	RECEPTACLE-BLANK, JUNCTION
RCP-E	131826-01-CHT	INCLUDES COVER & GASKET

RECEPTACLES(AFTER 01-25-10)

NO.	PART NUMBER	DESCRIPTION
RCP-1	176149-02-CHT/176159-01-CHT	RECEPTACLE-SINGLE/PLATE,FLUSH MOUNT
RCP-2	176149-01-CHT/176159-01-CHT	RECEPTACLE-DOUBLE/PLATE,FLUSH MOUNT
RCP-3	176153-01-CHT	RECEPTACLE-SINGLE, SURFACE MOUNT
RCP-4	157360-01-000	RECEPTACLE-SINGLE,SURFACE MOUNT,20A
RCP-5	176144-01-CHT/176159-01-CHT	RECEPTACLE-SINGLE/PLATE,FLUSH MT,20A
RCP-B	176158-01-CHT	RECEPTACLE-BLANK, JUNCTION
RCP-E	131826-01-CHT	INCLUDES COVER & GASKET
SW-1	176157-01-CHT/176159-01-CHT	SWITH-15A,SINGLE POLE/PLATE

CIRCUIT COLOR LEGEND

110V CIRCUIT	WIRE COLOR	COAXIAL CIRCUIT
A/C CIRCUIT 1	RED	CABLE INPUT W/O SPLITTER
A/C CIRCUIT 2	GRN	REAR TV W/O SPLITTER
GENERAL RECPS 1	BLU	ANTENNA
GENERAL RECPS 2	BRN	FRONT TV
GENERAL RECPS 3	PUR	VCR INPUT
GENERAL RECPS 4	GRY	
REFRIGERATOR/ CONVERTER	YEL	EXT ENT CTR
MICROWAVE	BLK	AUX INPUT
WATER HEATER	WHT	
WASHER/DRYER	GLD	
DISHWASHER	SIL	
	ORG	SATELLITE PLATE INPUT
	ORG/ORG	SATELLITE PLATE OUTPUT
	RED/RED	CABLE INPUT W/SPLITTER
	GRN/GRN	REAR TV W/SPLITTER
	PUR/PUR	VCR OUTPUT

FIRST USED: 96 MH'S

DO NOT SCALE DRAWING

TITLE: PART LISTING-ELECTRICAL

SHEET 2 | PART NO 121339 | REV

2/16/2010

DWG NO 121339

LAMP ASM-PACKAGE,PANCAKE

NO	PART NUMBER	DESCRIPTION
LF1-1	LAMP 98024-01-CHT SCREW G11-08-16U (4) CONNECTOR 58028-01-000 (2)	LAMP ASM, FROSTED LENS, 1 BULB W/SWITCH PROGRESSIVE DYNAMICS INC.
LF2-1	LAMP 98024-03-CHT SCREW G11-08-16U (6) CONNECTOR 58028-01-000 (2)	LAMP ASM, FROSTED LENS, 2 BULB W/SWITCH PROGRESSIVE DYNAMICS INC.
LO1-1	LAMP 98024-05-CHT SCREW G11-08-16U (4) CONNECTOR 58028-01-000 (2)	LAMP ASM, OPTI CLEAR LENS, 1 BULB W/SWITCH PROGRESSIVE DYNAMICS INC.
LO2-1	LAMP 98024-06-CHT SCREW G11-08-16U (6) CONNECTOR 58028-01-000 (2)	LAMP ASM, OPTI CLEAR LENS, 2 BULB W/SWITCH PROGRESSIVE DYNAMICS INC.
LF1N1	LAMP 98024-07-CHT SCREW G11-08-16U (4) CONNECTOR 58028-01-000 (2)	LAMP ASM, FROSTED LENS, 1 BULB W/O SWITCH PROGRESSIVE DYNAMICS INC.
LF2N1	LAMP 98024-08-CHT SCREW G11-08-16U (6) CONNECTOR 58028-01-000 (2)	LAMP ASM, FROSTED LENS, 2 BULB W/O SWITCH PROGRESSIVE DYNAMICS INC.
LFSN1	LAMP 98024-09-CHT SCREW G11-08-16U (6) CONNECTOR 58028-01-000 (2)	LAMP ASM, SINGLE FROSTED LENS, 2 BULB W/O SWITCH PROGRESSIVE DYNAMICS INC.

LAMP ASM-PACKAGE,PORCH

NO	PART NUMBER	DESCRIPTION
LEXT-1	LAMP 97917-01-CHT SCREW G67-10-129 (4) CONNECTOR 58028-01-000 (2)	LAMP ASM-PORCH, SURFACE MOUNT BARGMAN
LEXT-2UL	LAMP 8089-01-000 SCREW G68-06-10E (2) CONNECTOR 58028-01-000 (2)	LAMP ASM-PORCH, RECESSED UL LIST JRV PROD
LEXT-2CA	LAMP 8089-02-000 SCREW G68-06-10E (2) CONNECTOR 58028-01-000 (2)	LAMP ASM-PORCH, RECESSED CAN LIST JRV PROD
LEXT-3	LAMP 171513-01-CHT SCREW G67-10-129 (2) CONNECTOR 58028-01-000 (2)	LAMP ASM-PORCH SURFACE MOUNT OPTRONICS

LAMP ASM-PACKAGE,PANCAKE

NO	PART NUMBER	DESCRIPTION
LF1-2	LAMP 137417-01-CHT SCREW G11-08-16U (4) CONNECTOR 58028-01-000 (2)	LAMP ASM, FROSTED LENS, 1 BULB W/SWITCH PROGRESSIVE DYNAMICS INC.
LF2-2	LAMP 137417-04-CHT SCREW G11-08-16U (6) CONNECTOR 58028-01-000 (2)	LAMP ASM, FROSTED LENS, 2 BULB W/SWITCH PROGRESSIVE DYNAMICS INC.
LO1-2	LAMP 137417-02-CHT SCREW G11-08-16U (4) CONNECTOR 58028-01-000 (2)	LAMP ASM, OPTI CLEAR LENS, 1 BULB W/SWITCH PROGRESSIVE DYNAMICS INC.
LO2-2	LAMP 137417-05-CHT SCREW G11-08-16U (6) CONNECTOR 58028-01-000 (2)	LAMP ASM, OPTI CLEAR LENS, 2 BULB W/SWITCH PROGRESSIVE DYNAMICS INC.
LF1N2	LAMP 137417-03-CHT SCREW G11-08-16U (4) CONNECTOR 58028-01-000 (2)	LAMP ASM, FROSTED LENS, 1 BULB W/O SWITCH PROGRESSIVE DYNAMICS INC.
LFSN2	LAMP 137417-06-CHT SCREW G11-08-16U (6) CONNECTOR 58028-01-000 (2)	LAMP ASM, SINGLE FROSTED LENS, 2 BULB W/O SWITCH PROGRESSIVE DYNAMICS INC.

LAMP ASM-PACKAGE,HALOGEN

NO	PART NUMBER	DESCRIPTION
HAL	LAMP 123775-01-CHT SCREW (SUPPLIED) CONNECTOR 58028-01-000 (2)	LAMP ASM-HALOGEN, READING 1 BULB
HAL-S	LAMP 123775-01-CHT SPACER 123775-02-CHT SCREW G13-06-16U (3) CONNECTOR 58028-01-000 (2)	LAMP ASM-HALOGEN, READING WITH 3/4" SPACER 1 BULB
HAL-2	LIGHT-HAL,ROUND 165170-01-CHT SCREW G13-06-12B (2) CONNECTOR 58028-01-000 (2)	LIGHT-HALOGEN, ROUND 3"
HAL-4	LIGHT-HAL,ROUND 165643-01-CHT SCREW G13-05-16B (3) CONNECTOR 58028-01-000 (2) (SEE DETAIL CA)	LIGHT-HALOGEN, ROUND 4.5"

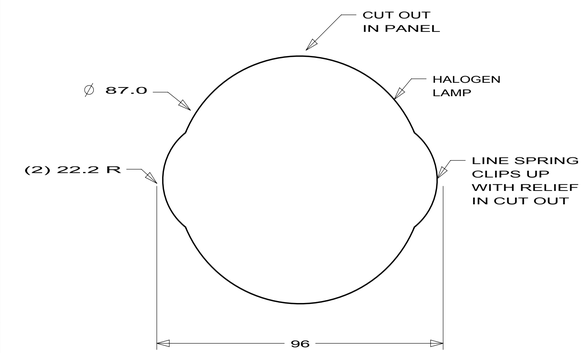

DETAIL CA

LEGEND

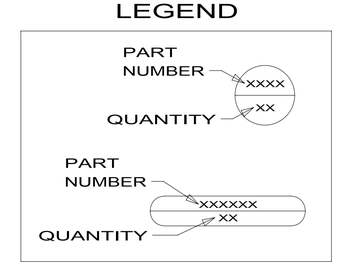

FIRST USED

96 MH'S

DO NOT SCALE DRAWING

TITLE:

PART LISTING-ELECTRICAL

SHEET 3 | PART NO 121339 | REV

2/16/2010

DWG NO 121339

LAMP ASM-PACKAGE,FLUORESCENT

NO	PART NUMBER	DESCRIPTION
FLU-1	LAMP 91936-02-CHT SCREW G11-08-12U (4) CONNECTOR 58028-01-000 (2)	LAMP ASM-FLUORESCENT 12" 2 BULB W/SWITCH THIN-LITE
FLU-2	LAMP 91936-01-CHT SCREW G11-08-12U (4) CONNECTOR 58028-01-000 (2)	LAMP ASM-FLUORESCENT 18" 2 BULB W/SWITCH THIN-LITE
FLU-3	LAMP 127327-01-CHT SCREW G11-08-12U (2) CONNECTOR 58028-01-000 (2)	LAMP ASM-FLUORESCENT 18" 1-12" BULB W/SWITCH THIN-LITE
FLU-4	LAMP 130338-01-CHT SCREW G11-08-12U (4) CONNECTOR 58028-01-000 (2)	LAMP ASM-FLUORESCENT 18" 2 BULB SURFACE MOUNT W/SWITCH THIN-LITE
FLU-5	LAMP 153464-02-CHT SCREW G11-08-12U (4) CONNECTOR 58028-01-000 (2)	LAMP ASM-FLUORESCENT 12" 2 BULB W/SWITCH COOL WHITE BULB THIN-LITE CUTOUT-122 X 336
FLU-6	LAMP 130338-02-CHT SCREW G11-08-12U (4) CONNECTOR 58028-01-000 (2)	LAMP ASM-FLUORESCENT 18" 2 BULB SURFACE MOUNT WARM WHITE BULB W/SWITCH THIN-LITE
FLU-7	LAMP 153464-05-CHT SCREW G11-08-12U (4) CONNECTOR 58028-01-000 (2)	LAMP ASM-FLUORESCENT 12" 2 BULB W/SWITCH WARM WHITE BULB THIN-LITE CUTOUT-122 X 336
FLU-8	LAMP 173072-01-CHT SCREW G11-08-12U (2) CONNECTOR 58028-01-000 (2)	LAMP ASM-FLUORESCENT 18" ONE 8 WATT BULB W/SWITCH OPTRONICS
FLUN1	LAMP 91936-04-CHT SCREW G11-08-12U (4) CONNECTOR 58028-01-000 (2)	LAMP ASM-FLUORESCENT 12" 2 BULB W/O SWITCH THIN-LITE
FLUN2	LAMP 91936-03-CHT SCREW G11-08-12U (4) CONNECTOR 58028-01-000 (2)	LAMP ASM-FLUORESCENT 18" 2 BULB W/O SWITCH THIN-LITE
FLUN3	LAMP 153464-01-CHT SCREW G11-08-12U (4) CONNECTOR 58028-01-000 (2)	LAMP ASM-FLUORESCENT 12" 2 BULB W/O SWITCH COOL WHITE BULB THIN-LITE CUTOUT-122 X 336
FLUN4	LAMP 153464-03-CHT SCREW G11-08-12U (6) CONNECTOR 58028-01-000 (2)	LAMP ASM-FLUORESCENT 18" 2 BULB W/O SWITCH COOL WHITE BULB THIN-LITE CUTOUT-122 X 480
FLUN5	LAMP 153464-06-CHT SCREW G11-08-12U (6) CONNECTOR 58028-01-000 (2)	LAMP ASM-FLUORESCENT 18" 2 BULB W/O SWITCH WARM WHITE BULB THIN-LITE CUTOUT-122 X 480
FLUN6	LAMP 153464-04-CHT SCREW G11-08-12U (6) CONNECTOR 58028-01-000 (2)	LAMP ASM-FLUORESCENT 12" 2 BULB W/O SWITCH WARM WHITE BULB THIN-LITE CUTOUT-122 X 336

LAMP ASM-PACKAGE,MAKEUP LAMP

NO	PART NUMBER	DESCRIPTION
LMU3-1	LAMP 110235-01-CHT SCREW W/SPACER (SUPPLIED) CONNECTOR 58028-01-000 (2)	LAMP ASM-MAKEUP (W/O MIRROR) 3 BULB (SUPPLIED) PROGRESSIVE DYNAMICS
LMM3-2	LAMP 123774-03-CHT SCREW (SUPPLIED) BULB 123918-01-000 (3) CONNECTOR 58028-01-000 (2)	LAMP ASM-MAKEUP (W/MIRROR) 3 BULB GUSTOFSON
LMU3-2	LAMP 138116-01-CHT SCREW (SUPPLIED) BULB 123918-01-000 (3) CONNECTOR 58028-01-000 (2)	LAMP ASM-MAKEUP (W/O MIRROR) 3 BULB GUSTOFSON
LMU3-3	LAMP 162446-01-CHT SCREW (SUPPLIED) BULB 123918-01-000 (3) CONNECTOR 58028-01-000 (2)	LAMP ASM-MAKEUP (W/O MIRROR) 3 BULB GUSTOFSON
LMU4-1	LAMP 110235-02-CHT SCREW G11-08-16U (2) CONNECTOR 58028-01-000 (2)	LAMP ASM-MAKEUP (W/O MIRROR) 4 BULB PROGRESSIVE DYNAMICS
LMU4-2	LAMP 138116-02-CHT SCREW (SUPPLIED) BULB 123918-01-000 (4) CONNECTOR 58028-01-000 (2)	LAMP ASM-MAKEUP (W/O MIRROR) 4 BULB GUSTOFSON
LMU4-3	LAMP 162446-02-CHT SCREW (SUPPLIED) BULB 123918-01-000 (4) CONNECTOR 58028-01-000 (2)	LAMP ASM-MAKEUP (W/O MIRROR) 4 BULB GUSTOFSON
LMM4-2	LAMP 123774-01-CHT SCREW G11-08-16U (2) BULB 123918-01-000 (4) CONNECTOR 58028-01-000 (2)	LAMP ASM-MAKEUP (W/MIRROR) 4 BULB GUSTOFSON

LAMP ASM-PACKAGE,OTHER

NO	PART NUMBER	DESCRIPTION
LSH-1	LAMP 121935-01-CHT SCREW G11-08-16U (4) CONNECTOR 58028-01-000 (2)	LAMP ASM-SHOWER PROGRESSIVE DYNAMICS INC.
LSH-2	LAMP 164039-01-CHT SCREW G11-08-16U (3) CONNECTOR 58028-01-000 (2)	LIGHT-DOME,SHOWER
LSH-3	LAMP 164040-01-CHT SCREW G13-07-12U (3) CONNECTOR 58028-01-000 (2)	LIGHT-DOME,SHOWER GLASS
LCR-1	LAMP 61424-01-000 SCREW G11-08-12U (4) CONNECTOR 58028-01-000 (2)	LAMP ASM-COURTESY,AISLE RAMCO (RECTANGULAR)
LCS-1	LAMP 108354-01-CHT SCREW G11-08-12U (4) CONNECTOR 58028-01-000 (2)	LAMP ASM-COURTESY,AISLE ITC MARINE (SQUARE)
READ-1	LIGHT-READING 132427-01-CHT SCREW SUPPLIED W/ LIGHT CLIP-U 141395-02-CHT (2) CONNECTOR 58028-01-000 (2)	LIGHT-READING,SWIVEL,ROUND 1 BULB
READ-2	LIGHT-READING 128786-02-CHT SCREW G11-08-16J (2) BULB 123917-01-000 CONNECTOR 58028-01-000 (2)	LIGHT,READING,SWIVEL
READ-3	LIGHT-READING 170833-01-CHT SCREW SUPPLIED W/LIGHT CONNECTOR 58028-01-000 (2)	LIGHT,READING,HAL
READ-4	LIGHT-READING, LED,FLEX 174060-01-CHT SCREW SUPPLIED W/LIGHT CONNECTOR 58028-01-000 (2)	LIGHT,READING,LED,FLEX
READ-5	LIGHT-READING, LED,SWIVEL 174815-01-CHT SCREW SUPPLIED W/LIGHT CONNECTOR 58028-01-000 (2)	LIGHT,READING, LED SWIVEL .05 A

LAMP ASM-PACKAGE,PANCAKE

NO	PART NUMBER	DESCRIPTION
LF1-3	LAMP 170693-01-CHT SCREW G11-08-16U (4) CONNECTOR 58028-01-000 (2)	LAMP ASM, FROSTED LENS, 1 BULB W/SWITCH GUSTAFSON
LF2-3	LAMP 170693-04-CHT SCREW G11-08-24U (4) CONNECTOR 58028-01-000 (2)	LAMP ASM, FROSTED LENS, 2 BULB W/SWITCH GUSTAFSON
LO1-3	LAMP 170693-02-CHT SCREW G11-08-16U (4) CONNECTOR 58028-01-000 (2)	LAMP ASM, OPTI CLEAR LENS, 1 BULB W/SWITCH GUSTAFSON
LO2-3	LAMP 170693-05-CHT SCREW G11-08-24U (4) CONNECTOR 58028-01-000 (2)	LAMP ASM, OPTI CLEAR LENS, 2 BULB W/SWITCH GUSTAFSON
LF1N3	LAMP 170693-03-CHT SCREW G11-08-16U (4) CONNECTOR 58028-01-000 (2)	LAMP ASM, FROSTED LENS, 1 BULB W/O SWITCH GUSTAFSON
LFSN3	LAMP 170693-06-CHT SCREW G11-08-24U (4) CONNECTOR 58028-01-000 (2)	LAMP ASM, SINGLE FROSTED LENS, 2 BULB W/O SWITCH GUSTAFSON
LOSN3	LAMP 170693-07-CHT SCREW G11-08-24U (4) CONNECTOR 58028-01-000 (2)	LAMP ASM, OPTICLEAR LENS, 2 BULB W/O SWITCH GUSTAFSON
LO1N3	LAMP 170693-08-CHT SCREW G11-08-16U (4) CONNECTOR 58028-01-000 (2)	LAMP ASM, OPTICLEAR LENS, 1 BULB W/O SWITCH GUSTAFSON

LEGEND

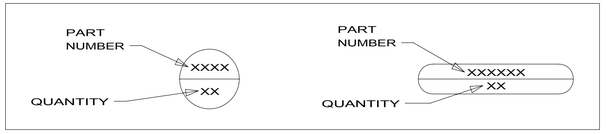

FIRST USED

96 MH'S

DO NOT SCALE DRAWING

TITLE:

PART LISTING-ELECTRICAL

SHEET 4 | PART NO 121339 | REV

2/16/2010

DWG NO 121339

ANTENNA ASM-PACKAGE

NO	PART NUMBER	DESCRIPTION
ANT-1	ANTENNA 76319-24-000 HARDWARE-INTERIOR 76319-25-000 BUMPER 69726-02-000 (2) 1 CLIP 80734-02-000	ROOF MOUNT TV ANTENNA ASM 25.5" MAST 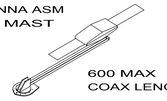 600 MAX COAX LENGTH
ANT-2	ANTENNA 076319-23-000(UP TO 05-31-09) 173519-01-CHT(AFTER 06-01-09) HARDWARE-INTERIOR 76319-25-000 BUMPER 69726-02-000 (2) 1 ADAPTER SUPPLIED W/ANTENNA	ROOF MOUNT TV ANTENNA ASM 44.5" MAST 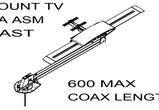 600 MAX COAX LENGTH
ANT-2W	ANTENNA 076319-23-000(UP TO 05-31-09) 173519-01-CHT(AFTER 06-01-09) HARDWARE-INTERIOR 76319-25-000 BUMPER 69726-02-000 (2) 1 ADAPTER SUPPLIED W/ANTENNA WEDGE 76319-26-000	ROOF MOUNT TV ANTENNA ASM 44.5" MAST 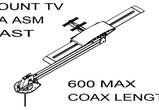 600 MAX COAX LENGTH
ANTA-1	ANTENNA 158270-01-CHT BUMPER 69726-02-000 (2) 1 ADAPTER SUPPLIED W/ANTENNA ANTENNA-WINGMAN, ACCESSORY 173519-03-CHT	ROOF MOUNT TV ANTENNA ASM AUTOMATIC 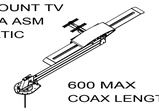 600 MAX COAX LENGTH
ANT-3	ANTENNA-TV ROOF MNT,ROUND 167632-01-CHT PLATE-ROOF, CABLE ENTRY 146488-01-000 SCREW G67-10-129 (10) CABLE ASM-COAX 87105-01-006 ADAPTER 82134-01-000	ROOF MOUNT OMNI- DIRECTIONAL ANTENNA MOUNTING SCREWS SUPPLIED WITH ANTENNA 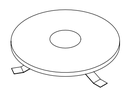
ANT-4	ANTENNA 173519-01-CHT HARDWARE-INTERIOR 76319-25-000 BUMPER 69726-02-000 (2) 1 ADAPTER SUPPLIED W/ANTENNA ANTENNA-HANDLE EXTENSION 173519-02-CHT	ROOF MOUNT TV ANTENNA ASM 44.5" MAST 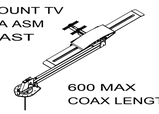 600 MAX COAX LENGTH

SENSORS

NO	PART NUMBER	DESCRIPTION
LPGD	LP GAS DETECTOR 150138-03-CHT SCREW G68-06-10U (2)	DETECTOR-LP GAS 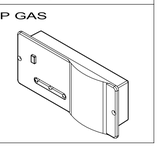

PANELS

NO	PART NUMBER	DESCRIPTION
SOLAR	PANEL-SOLAR 10 WATT 151647-01-000 SCREW G11-08-12U (4)	SOLAR PANEL 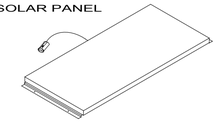

ANTENNA ASM-PACKAGE

ANTEXT-1	CABLE ASM-EXTENS 77069-02-000	RADIO ANTENNA CABLE EXTENSION 2400MM USABLE LENGTH
ANTKIT-1	ADAPTER-PLATE 76319-06-000 SCREW G11-08-08T (6) CLIP-WIRE 80734-02-000 SCREW G11-08-08T	PLATE ASM-ADAPTERS CABLE ROOF MOUNTING PLATE W/ CABLE-CABLE ADAPTER, FITTINGS, AND CABLE RETAINING CLIP 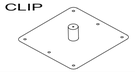
ANT-R	ANTENNA-RADIO 90944-01-000 EXTENDER-SHAFT ANTENNA 109889-04-000 BRACKET-ANTENNA GROUND 147741-01-CHT	ROOF MOUNT RADIO ANTENNA
ANTEXT-2	CABLE ASM-EXTENS 77069-03-000	RADIO ANTENNA CABLE EXTENSION 6600 MM USABLE LENGTH
ANT-A	ANTENNA-RADIO 90944-01-000 EXTENDER-SHAFT 76 MM 171825-01-000 (2) BRACKET-GROUND 147741-01-CHT NUT OMD01K-06-000 (2)	ROOF MOUNT RADIO ANTENNA THICK ROOF

SATELLITE DISH INSTL

NO	PART NUMBER	DESCRIPTION
DM-1	SATELLITE DISH 137135-02-000 SCREW G67-10-12B (8) PLATE & BRACKET (SUPPLIED) SCREW G67-10-12B (10)	SATELLITE DISH ANTENNA ASM MANUAL SETUP 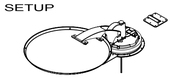
DA-1	SATELLITE DISH 163598-01-CHT PLATE-ROOF,CABLE ENTRY QUAD 146488-03-000 SCREW G67-10-12U (8) (FOR PLATE) SCREW G39-10-12U (12) (FOR SATELLITE DISH)	SATELLITE DISH ANTENNA ASM AUTOMATIC SETUP 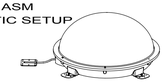
DI-1	SATELLITE DISH 154474-04-CHT SCREW G39-10-12B (12) PLATE 146488-01-000 SCREW G67-10-12B (10)	SATELLITE DISH ANTENNA ASM IN MOTION SETUP 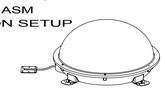

SATELLITE DISH INSTL

NO	PART NUMBER	DESCRIPTION
DA-2	SATELLITE DISH 163598-01-CHT PLATE-ROOF,CABLE ENTRY QUAD 146488-03-000 CABLE ASM-COAX 9" 163598-04-000 ADAPTOR-CABLE TO CABLE 82134-01-000 SCREW G67-10-12U (8) (FOR PLATE) SCREW G39-10-12U (12) (FOR SATELLITE DISH)	SATELLITE DISH ANTENNA ASM AUTOMATIC SETUP 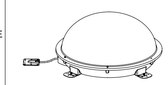
DI-2	SATELLITE DISH 154474-04-CHT PLATE-ROOF,CABLE ENTRY QUAD 146488-03-000 CABLE ASM-COAX 9" 163598-04-000 ADAPTOR-CABLE TO CABLE 82134-01-000 SCREW G67-10-12U (8) (FOR PLATE) SCREW G39-10-12U (12) (FOR SATELLITE DISH)	SATELLITE DISH ANTENNA ASM AUTOMATIC SETUP 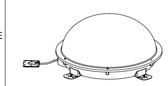
DM-2	SATELLITE DISH 137135-05-000 PLATE-ROOF,ENTRY (SUPPLIED WITH SATELLITE DISH) SCREW G67-10-12U (8) (FOR ROOF PLATE) SCREW G67-10-12U (10) (FOR SATELLITE DISH)	SATELLITE DISH ANTENNA ASM MANUAL SETUP 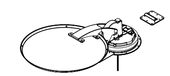

LEGEND

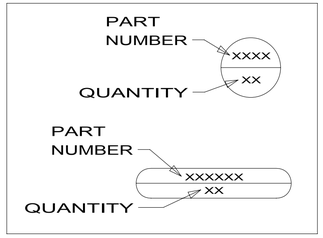

1 ADD BUMPER TO BOTTOM SIDE OF ANTENNA WINGS TO PREVENT DAMAGE TO ROOF.

FIRST USED 96 MH'S		
DO NOT SCALE DRAWING		
TITLE: PART LISTING-ELECTRICAL		
SHEET 5	PART NO 121339	REV

2/16/2010

DWG NO 121339

RECEPTACLE PACKAGE-GFI

NO	PART NUMBER	DESCRIPTION
GFI US	RECEPTACLE 163319-01-CHT BOX 91910-02-000 WIRE-BONDING 133678-03-000 SCREW G13-07-12B (4) CONNECTOR 8313-01-000 TUBING-VINYL 8041-02-000 (300MM) 1	GFI RECEPTACLE WITH COVER AND BOX FOR US APPLICATION 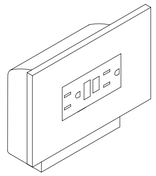
GFI CAN	RECEPTACLE 163319-01-CHT BOX 91910-01-000 WIRE-BONDING 133678-03-000 SCREW G13-07-12B (4) CONNECTOR 8313-01-000 TUBING-VINYL 8041-02-000 (300MM) 1	GFI RECEPTACLE WITH COVER AND BOX FOR CANADA APPLICATION 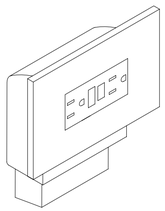

RECEPTACLE PACKAGE-GFI

NO	PART NUMBER	DESCRIPTION
GFI-1 US	RECEPTACLE 163319-01-CHT BOX 133070-01-000 WIRE-BONDING 133678-03-000 SCREW G13-07-12B (4) CONNECTOR 8313-01-000 TUBING-VINYL 8041-02-000 (300MM) 1	GFI RECEPTACLE WITH COVER AND BOX FOR US APPLICATION 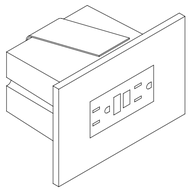
GFI-1 CAN	RECEPTACLE 163319-01-CHT BOX 133070-02-000 WIRE-BONDING 133678-03-000 SCREW G13-07-12B (4) CONNECTOR 8313-01-000 TUBING-VINYL 8041-02-000 (300MM) 1	GFI RECEPTACLE WITH COVER AND BOX FOR CANADA APPLICATION 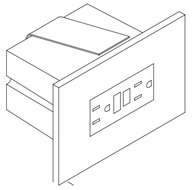

SPACERS

NO	PART NUMBER	DESCRIPTION
SP-01	SPACER 102568-01-XXX	STANDARD 110V RECEPTACLE SPACER (WOOD,VYL RAP,OG) 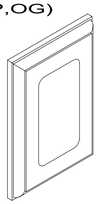
SP-02	SPACER 102568-02-XXX	WOOD SPACER FOR CEILING MOUNTED A/C PREP BOX (US) (WOOD,VYL RAP,OG) 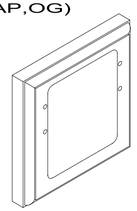
SP-03	SPACER 102568-03-XXX	WOOD SPACER FOR CEILING MOUNTED A/C PREP BOX (CANADA) (WOOD,VYL RAP,OG) 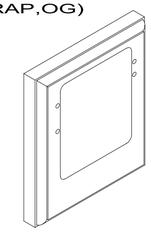
SP-04	SPACER 133713-01-CHT	STANDARD 110V RECEPTACLE SPACER (WOOD,VYL RAP,BEV) 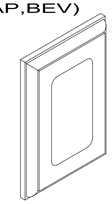
SP-05	SPACER 133713-20-XXX	STANDARD 110V RECEPTACLE SPACER (WOOD,BEV) 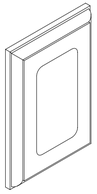
SP-21	SPACER 126052-01-XXX	WOOD SPACER FOR 1 - 110V RECEPTACLE AND 1 - REAR TV (12V) JACK (WOOD,BEV) 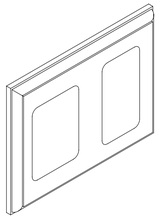

LEGEND

MISC.	SPACER
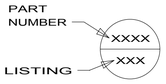	

1 APPLY TUBING TO BARE GROUND WIRES.

NOTES:

FIRST USED 96 MH'S

DO NOT SCALE DRAWING

TITLE: PART LISTING-ELECTRICAL

SHEET 6 | PART NO 121339 | REV

2/16/2010

DWG NO 121339

PREP-A/C,RECESSED (W/OUT FACTORY A/C)

NO	PART NUMBER	DESCRIPTION
PREP A/C-US	BOX 91910-02-000 COVER 84099-02-CHT LABEL 91243-01-000 SCREW G13-07-12B (4) CONNECTOR 8313-01-000 (3)	BOX AND EQUIPMENT USED FOR A/C PREP (W/OUT FACTORY A/C). US APPLICATION (RECESSED IN ROOF) 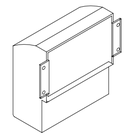
PREP A/C-CAN	BOX 91910-01-000 COVER 84099-02-CHT LABEL 91243-01-000 SCREW G13-07-12B (4) CONNECTOR 8313-01-000 (3)	BOX AND EQUIPMENT USED FOR A/C PREP (W/OUT FACTORY A/C). CANADA APPLICATION (RECESSED IN ROOF) 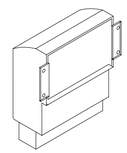

CONNECTION BOX-POWER CORD

NO	PART NUMBER	DESCRIPTION
J-PC 30 J-PC 30-US J-PC 30-CA	BOX 8289-01-000 COVER 8294-01-000 SCREW G67-10-10B (2) WIRE ASM-GROUND 133678-02-000 CONNECTOR 8314-01-000 (3) CONNECTOR 8356-02-000 CONNECTOR (PC) 8355-01-000	CONNECTION BOX IN POWER CORD COMPT FOR POWER CORD (US & CA APPLICATION) 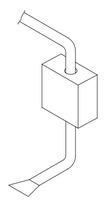

CONNECTION BOX-GENERATOR RECEPTACLE

NO	PART NUMBER	DESCRIPTION
J-RCP 30 J-RCP 30-US J-RCP 30-CA	BOX 8289-01-000 RECEPTACLE 24924-02-000 COVER 69238-01-000 SCREW G67-10-10B (2) WIRE ASM-GROUND 133678-02-000 133678-04-000 CONNECTOR 8314-01-000 TUBING-VINYL 8041-02-000 (150MM) 1	CONNECTION BOX IN POWER CORD COMPT FOR THE GENERATOR RECEPTACLE (US & CA APPLICATION) 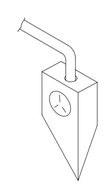

CONNECTION BOX, GENERATOR SERVICE FEED

NO	PART NUMBER	DESCRIPTION
J-GEN 30 J-GEN 30-US J-GEN 30-CA	BOX 8289-01-000 COVER 8294-01-000 SCREW G67-10-10B (2) WIRE ASM-GROUND 133678-02-000 WIRE NUT-GREY 8314-01-000 (3) CONNECTOR-WIRE 8356-01-000	BOX AND EQUIPMENT USED FOR CONNECTING THE GENERATOR LEADS TO THE SERVICE ENTRANCE WIRES (US & CA APPLICATION) 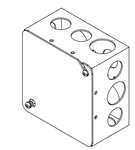

PREP-A/C,SURFACE (W/OUT FACTORY A/C)

NO	PART NUMBER	DESCRIPTION
PREP SURF	BOX 93603-01-000 COVER 53337-01-000 LABEL 91243-01-000 WIRE-BONDING 8019-01-000 SCREW G11-08-12B (2) TERMINAL 8328-01-000 CONNECTOR 8313-01-000 (2) CONNECTOR 8311-01-000	SURFACE MOUNT, US AND CANADA, BOX AND EQUIPMENT FOR A/C PREP (W/OUT FACTORY A/C). TYPICALLY LOCATED ON OVERHEAD CABINET INNER WALL OR ON CEILING. 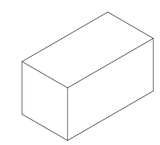

LEGEND

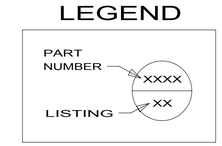

1 APPLY TUBING TO BARE GROUND WIRES.

NOTES:

FIRST USED	96 MH'S
DO NOT SCALE DRAWING	
TITLE:	PART LISTING-ELECTRICAL
SHEET 7	PART NO 121339 REV

2/16/2010

RELEASE	REV A	DATE	DWG NO 172085

REV	ZONE	REVISION RECORD	DATE	DFTR-ORIG

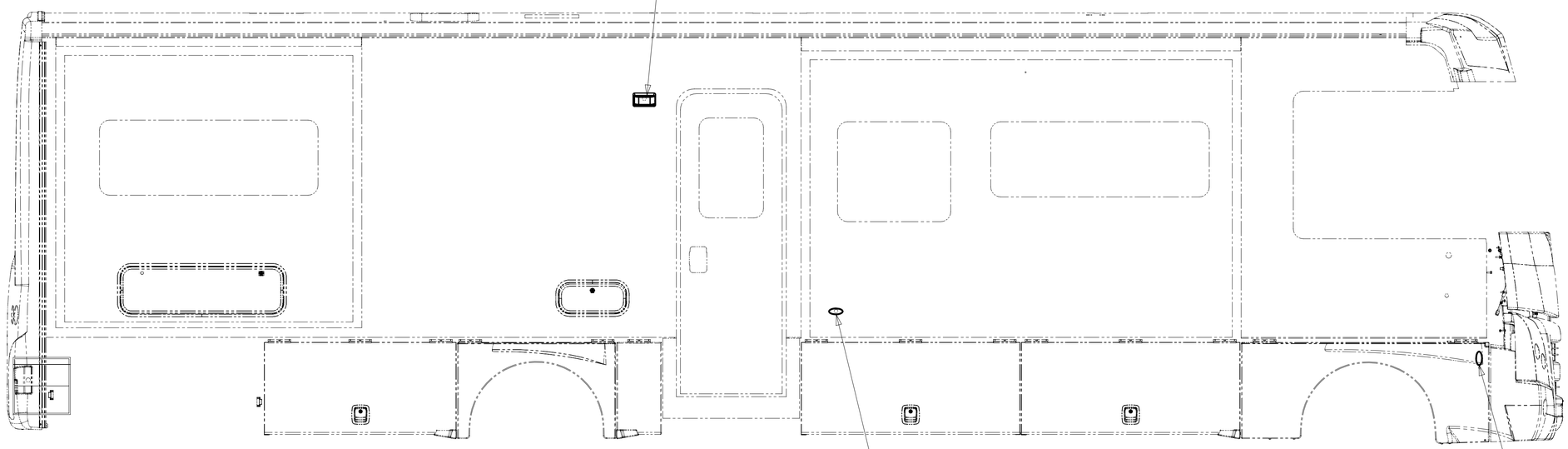

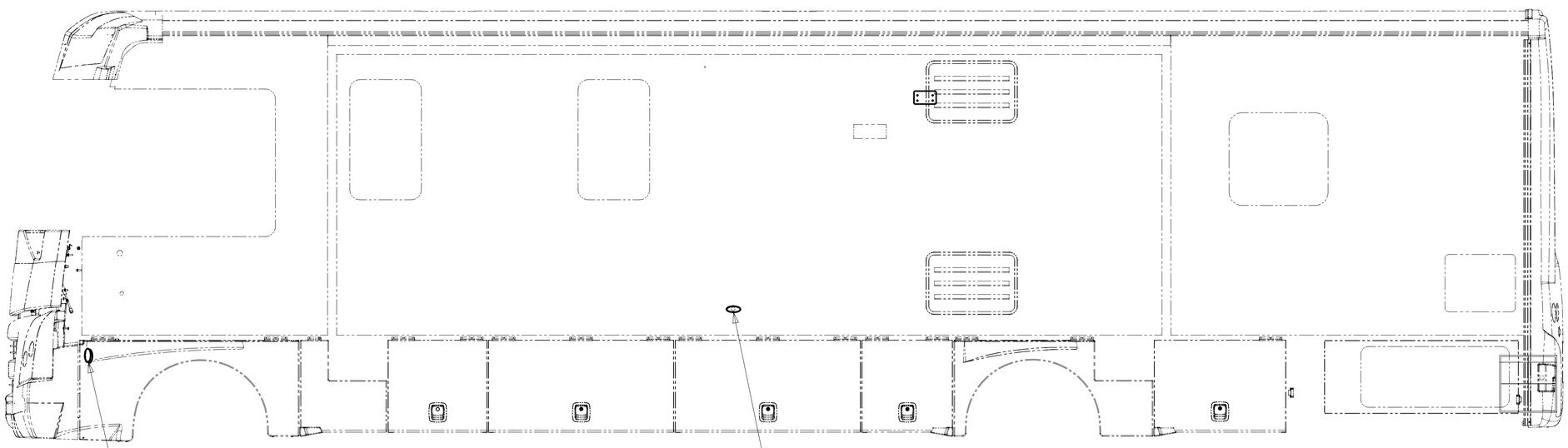

265 CODES/STANDARDS-CSA/CMVSS

1B1 CODES/STANDARDS-USA

1B1 265

X-X

FOR ELECTRICAL CALLOUTS SEE DWG NO. 121339-01-000

FOR ELECTRICAL TORQUE SPECIFICATIONS SEE DWG NO. 128783-01-000

COPYRIGHT 2010
WINNEBAGO
INDUSTRIES, INC.

DFTR	ORIG. DATE
CHKR	ALL DIMENSIONS ARE IN MILLIMETERS
P.E.	
M.E.	FIRST USED
DSNR	10 D-SERIES

UNSPECIFIED TOLERANCES ARE:
WHOLE DIM (X) :
ONE-PLACE (X.X) :
TWO-PLACE (X.XX) :
ANGLE :
THIRD ANGLE PROJECTION

MATERIAL:

DO NOT SCALE DRAWING

TITLE: WIRING INSTL-EXTERIOR LAMPS

SHEET 1 OF 3 | PART NO 172085 | REV

REF: 1

2/18/2010

DWG NO 172085

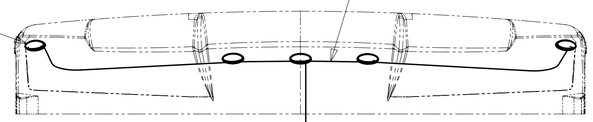

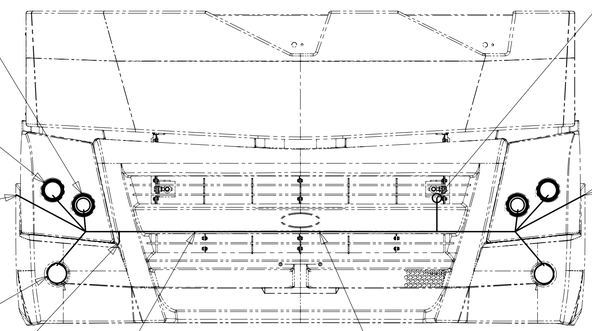

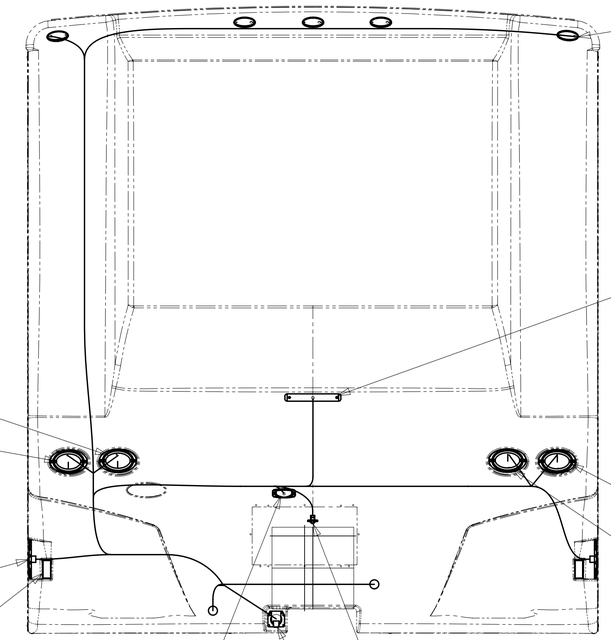

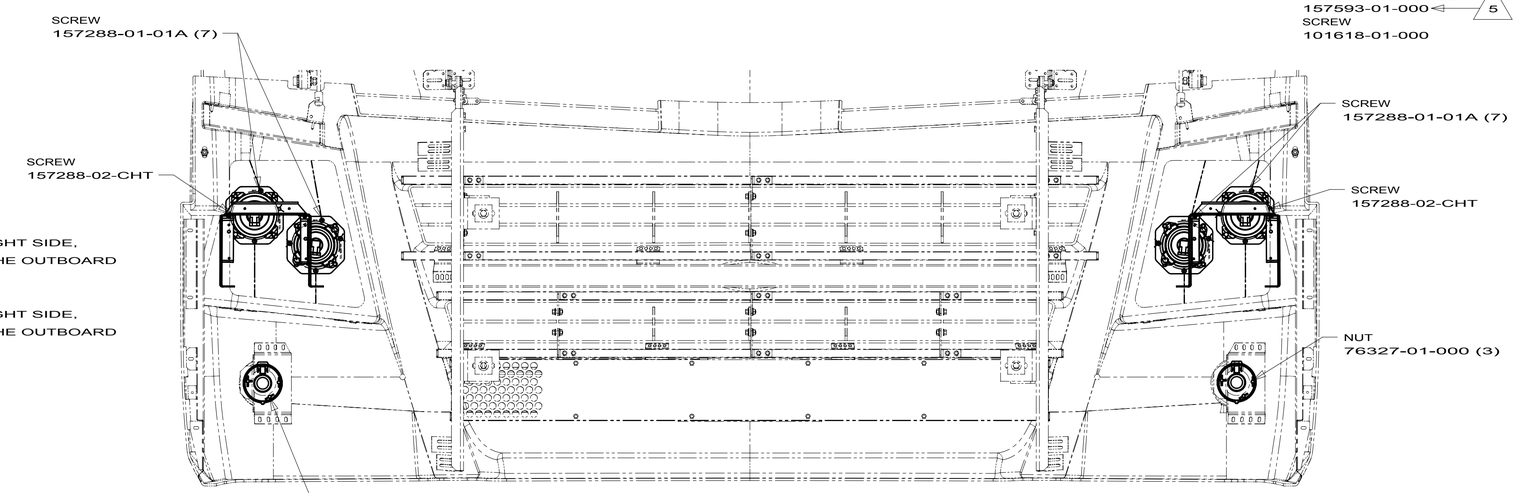

HEADLAMPS
(BACK VIEW)

12 CONNECT 4 PIN HSG WITH WRAP OF RED TAPE TO THE STOP/TURN/TAILLAMP.

11 MOUNT LIGHT SUCH THAT THE MOLDED CONNECTOR ON LIGHT IS TOWARD THE BOTTOM.

10 USED ON D33C ONLY.

9 USED ON D31E, D35J, D37L.

8 THE 2 PIN HOUSING WITH CIRCUITS NB & DDM, FOR THE RIGHT SIDE, AND NB & DDL FOR THE LEFT SIDE IS TO BE PLUGGED INTO THE OUTBOARD LOW BEAM HEADLAMP.

7 THE 2 PIN HOUSING WITH CIRCUITS NA & DDM, FOR THE RIGHT SIDE, AND NA & DDL FOR THE LEFT SIDE IS TO BE PLUGGED INTO THE OUTBOARD LOW BEAM HEADLAMP.

5 CONNECTOR-PLUG,TRAILER 146246-01-000 TO BE SUPPLIED IN COACH WITH 240

4 MOUNT LIGHT SUCH THAT THE MOLDED CONNECTOR ON LIGHT IS TOWARD THE TOP.

3 SECURE WIRE ASM APPROX. EVERY 450 TO BATTERY CABLES AND BRACKETS. USE TIE-WIRE 8343-01-000 OR 93147-01-000 AS APPROPRIATE.

2 CLEAN PAINT OFF METAL (BOLT) BEFORE CONNECTING GROUND TO INSURE CONTACT. ALSO MOUNT CHASSIS SUPPLIED HORN TO GROUND BOLT.

1. GATHER ALL EXCESS WIRE AFTER MAKING ALL CONNECTIONS AND BUNDLE AND SECURE WITH TIE-WIRE 8343-01-000 OR 93147-01-000.

NOTES:

1PU	WKHRSE 22K 230HP DSL 22.5TIR
1PE	WORKHORSE 20,500 DSL 230HP
1PS	WORKHORSE 22,000#-22.5 TIRE
16L	FORD 22,000#-22.5 AL WHL
1PR	WORKHORSE 22,000#-19.5 TIRE
16K	FORD CHASSIS 22,000
240	TRAILER HITCH
265	CODES/STANDARDS-CSA/CMVSS
1B1	CODES/STANDARDS USA

1B1 265

FOR ELECTRICAL TORQUE SPECIFICATIONS SEE DWG NO. 128783-01-000

X-X FOR ELECTRICAL CALLOUTS SEE DWG NO. 121339-01-000

FIRST USED
10 D-SERIES

DO NOT SCALE DRAWING

TITLE:
WIRING INSTL-EXTERIOR LAMPS

SHEET 2 | PART NO 172085 | REV

2/18/2010

DWG NO 172085

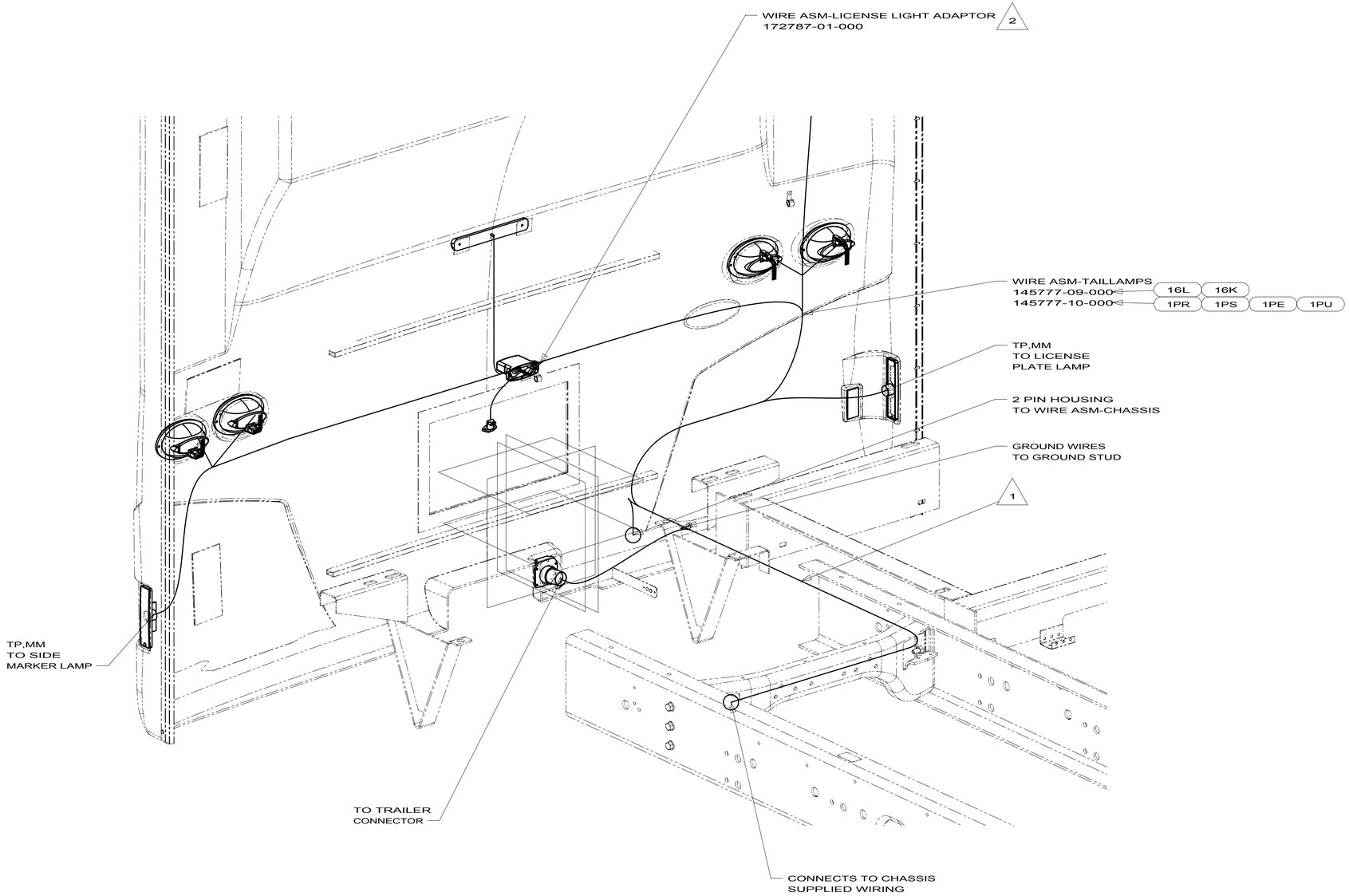

1PE	WORKHORSE 20,500 DSL 230HP
1PU	WKHRSE 22K 230HP DSL 22.5TIR
1PS	WORKHORSE 22,000#-22.5 TIRE
1PR	WORKHORSE 22,000#-19.5 TIRE
16K	FORD CHASSIS 22,000
16L	FORD 22,000#-22.5 AL WHL
265	CODES/STANDARDS-CSA/CMVSS
1B1	CODES/STANDARDS USA

1B1 265

NOTES:

2 USED ON D33C ONLY.

1 WIRE TIE 8343-02. FASTEN TO FRAME AT LEAST ONCE EVERY 600MM.

FOR ELECTRICAL TORQUE SPECIFICATIONS SEE DWG NO. 128783-01-000

X-X FOR ELECTRICAL CALLOUTS SEE DWG NO. 121339-01-000

FIRST USED

10 D-SERIES

DO NOT SCALE DRAWING

TITLE: WIRING INSTL-EXTERIOR LAMPS

SHEET 3 | PART NO 172085 | REV

2/18/2010

DRAWING NO.	MODEL	SHEETS
169925-01	D-SERIES	1,2,3,4,9
169925-02	J-SERIES	5,6,7,8,9
169925-03	NOT USED	NOT USED

RELEASE	REV	DATE	DWG NO
	A		169925

REV	ZONE	REVISION RECORD	DATE	DFTR-ORIG

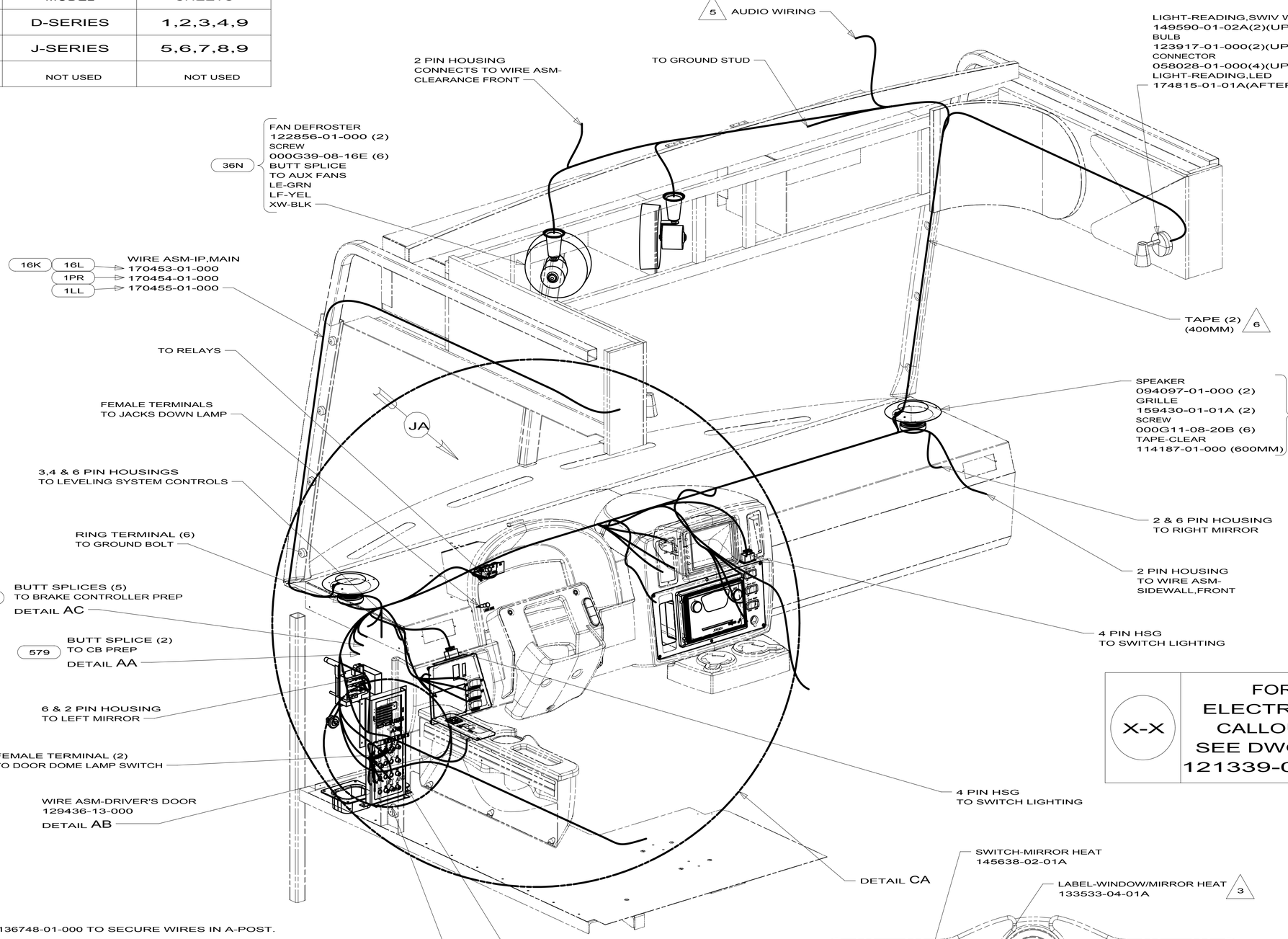

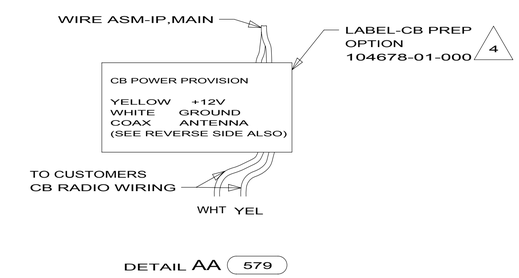

DETAIL AA 579

WIRE ASM-IP, MAIN

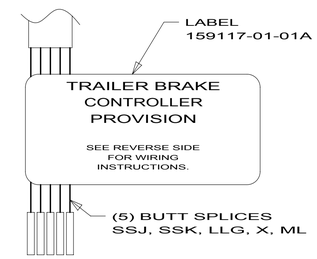

DETAIL AC 1PR

64Q	SEAT PED-6-WAY POWER DRIVER
579	RADIO - CB WIRE PREP
36N	FANS-DEFROSTER, AUXILIARY
12L	DOOR-DRIVER
1PR	WORKHORSE 22,000#-19.5 TIRE
1LL	FRTL(FRED) 27,000#-22.5 TIRE
16L	FORD 22,000#-22.5 AL WHL
16K	FORD CHASSIS 22,000
265	CODES/STANDARDS-CSA/CMVSS
1B1	CODES/STANDARDS USA

X-X

FOR ELECTRICAL CALLOUTS SEE DWG NO. 121339-01-000

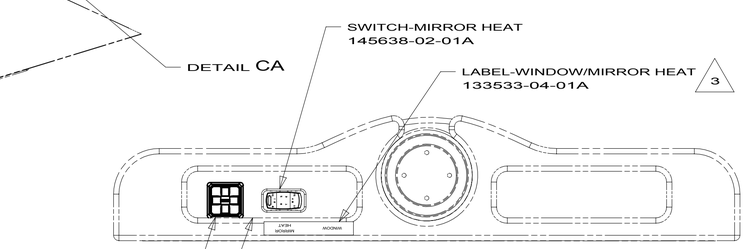

DETAIL AB 28X

FOR ELECTRICAL TORQUE SPECIFICATIONS SEE DWG NO. 128783-01-000

6 USE TAPE 136748-01-000 TO SECURE WIRES IN A-POST.

5 SEE WIRING INSTL-TV/DVD,FRONT FOR ADDITIONAL INFORMATION.

4 EDGE OF LABEL TO HANG JUST BELOW BOTTOM OF DASH.

3 CUT LABEL TO READ ONLY MIRROR HEAT. POSITION NEXT TO MIRROR HEAT SWITCH AS SHOWN.

2 COVER EACH SPEAKER GRILL WITH TAPE-CLEAR 114187-01-000 (600 MM).

1. WINNEBAGO WIRE ASSEMBLIES ARE SHOWN FOR CLARITY.

NOTES:

D-SERIES

1B1 265

WINNEBAGO INDUSTRIES

COPYRIGHT 2010
WINNEBAGO
INDUSTRIES, INC.

DFTR	ORIG. DATE
CHKR	ALL DIMENSIONS ARE IN MILLIMETERS
P.E.	
M.E.	FIRST USED
DSNR	10 D,J,K-SER

UNSPECIFIED TOLERANCES ARE:		
WHOLE DIM (X)	:	3
ONE-PLACE (X.X)	:	1.5
TWO-PLACE (X.XX)	:	0.50
ANGLE	:	1°

MATERIAL:

THIRD ANGLE PROJECTION

DO NOT SCALE DRAWING

TITLE: WIRING INSTL-FRONT END

SHEET 1 OF 9 | PART NO 169925 | REV

REF: 1

2/18/2010

DWG NO 169925

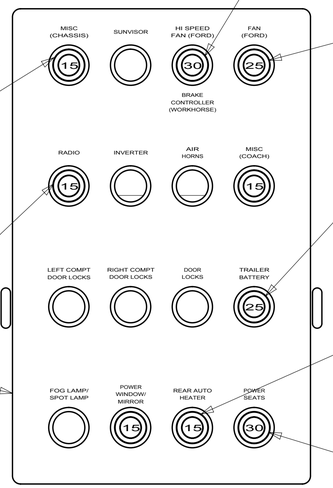

1PS 1PV 1PE 1PR

CIRCUIT BREAKER-30 AMP
093655-02-000
SCREW
000G52-06-04B
000G52-06-05B
LOCKWASHER
0ME02B-04-071

△3

CIRCUIT BREAKER-15 AMP
093654-02-000
SCREW
000G52-06-05B
LOCKWASHER
0ME02B-04-071

CIRCUIT BREAKER-25 AMP
093655-01-000
SCREW
000G52-06-04B
000G52-06-05B
LOCKWASHER
0ME02B-04-071

CIRCUIT BREAKER-15 AMP
093654-02-000 (3)
SCREW
000G52-06-05B (3)
LOCKWASHER
0ME02B-04-071 (3)

CIRCUIT BREAKER-25 AMP
093655-01-000
SCREW
000G52-06-04B
000G52-06-05B
LOCKWASHER
0ME02B-04-071

LABEL-CIRCUIT BREAKER
093236-55-000

CIRCUIT BREAKER-15 AMP
093654-02-000
SCREW
000G52-06-05B
LOCKWASHER
0ME02B-04-071
53Z

CIRCUIT BREAKER-30 AMP
093655-02-000
SCREW
000G52-06-04B
000G52-06-05B
LOCKWASHER
0ME02B-04-071
64Q

VIEW BB 16K 16L 1PR 1PE 1PU 1PS

1PR 16K 16L

BRACKET-FUSE PANEL
149690-01-02B
149690-02-02B
SCREW
000G11-10-08B (4)

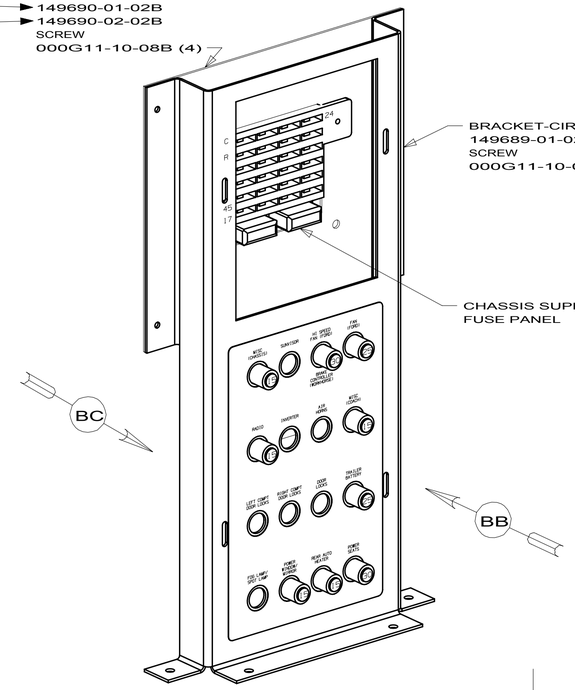

BRACKET-CIRCUIT BREAKER
149689-01-02B
SCREW
000G11-10-08B (4)

CHASSIS SUPPLIED FUSE PANEL △2

DETAIL BA

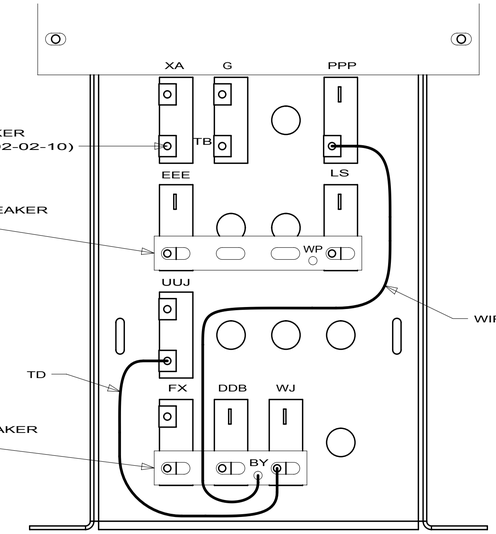

BUSS BAR CIRCUIT BREAKER
141744-01-000(UP TO 02-02-10)

BUSS BAR CIRCUIT BREAKER
141744-03-000

WIRE △3

BUSS BAR CIRCUIT BREAKER
141744-02-000

VIEW BC △1 16K 16L

D-SERIES

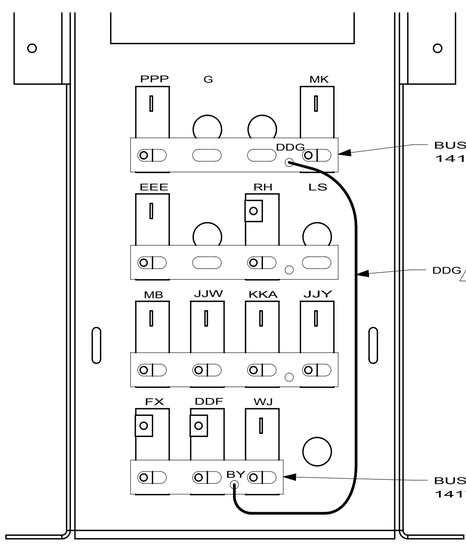

BUSS BAR CIRCUIT BREAKER
141744-03-000 (3)

DDG △4

BUSS BAR CIRCUIT BREAKER
141744-02-000

VIEW BC △1 1LL

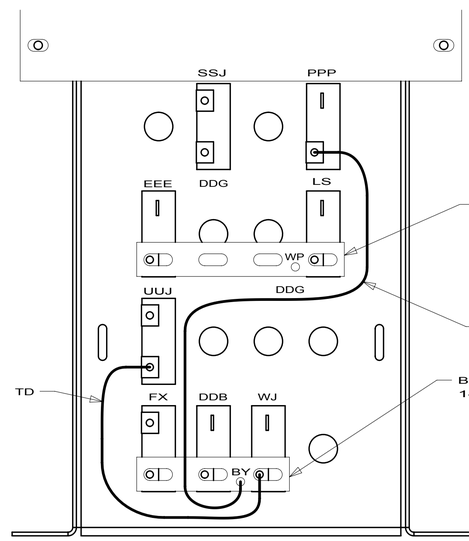

BUSS BAR CIRCUIT BREAKER
141744-03-000

WIRE △3

BUSS BAR CIRCUIT BREAKER
141744-02-000

VIEW BC △1 1PR

64Q	SEAT PED-6-WAY POWER DRIVER
53Z	WTR HTR-6GAL/110/LP/MTR/AUTO
1PR	WORKHORSE 22,000#-19.5 TIRE
1LL	FRTL(FRED) 27,000#-22.5 TIRE
16L	FORD 22,000#-22.5 AL WHL
16K	FORD CHASSIS 22,000
265	CODES/STANDARDS-CSA/CMVSS
1B1	CODES/STANDARDS USA

1B1 265

△4 CONNECT DDG TO HOLE IN BUSS BAR OR TO BOTTOM LUG OF 30 AMP BREAKER.

△3 USED ON D37L & D33C ONLY.

△2 WORKHORSE PANEL SHOWN.

△1 ALL CIRCUITS ARE IN WIRE ASM-IP,MAIN.

NOTES:

FOR ELECTRICAL TORQUE SPECIFICATIONS SEE DWG NO. 128783-01-000

X-X FOR ELECTRICAL CALLOUTS SEE DWG NO. 121339-01-000

FIRST USED 10 D,J,K-SER

DO NOT SCALE DRAWING

TITLE: WIRING INSTL-FRONT END

SHEET 2 PART NO 169925 REV

2/18/2010

DWG NO 169925

WORKHORSE LOCATION

SEE MONITOR INSTL

60M 3 2 LIGHT ASM-INDICATOR,RED
150237-01-000
LABEL-JACKS DOWN
133533-01-01A

WIRE ASM-IP POD,RIGHT
156819-02-000

WIRE ASM-IP POD,LEFT
156817-01-000

1 HEADLAMP SWITCH

WIRE ASM-IP,LEFT
156816-05-000

DETAIL DA

1 COURTESY CENTER
DETAIL CB

STUD-FEED THRU
118499-01-000

BRACKET-MOUNTING
118571-03-000
GASKET
118571-04-000
NUT
000D11-10-00B (2)

SEAL-WIRES,CAB FLOOR
134542-01-01A (2)
SCREW
000G39-10-12B (6)

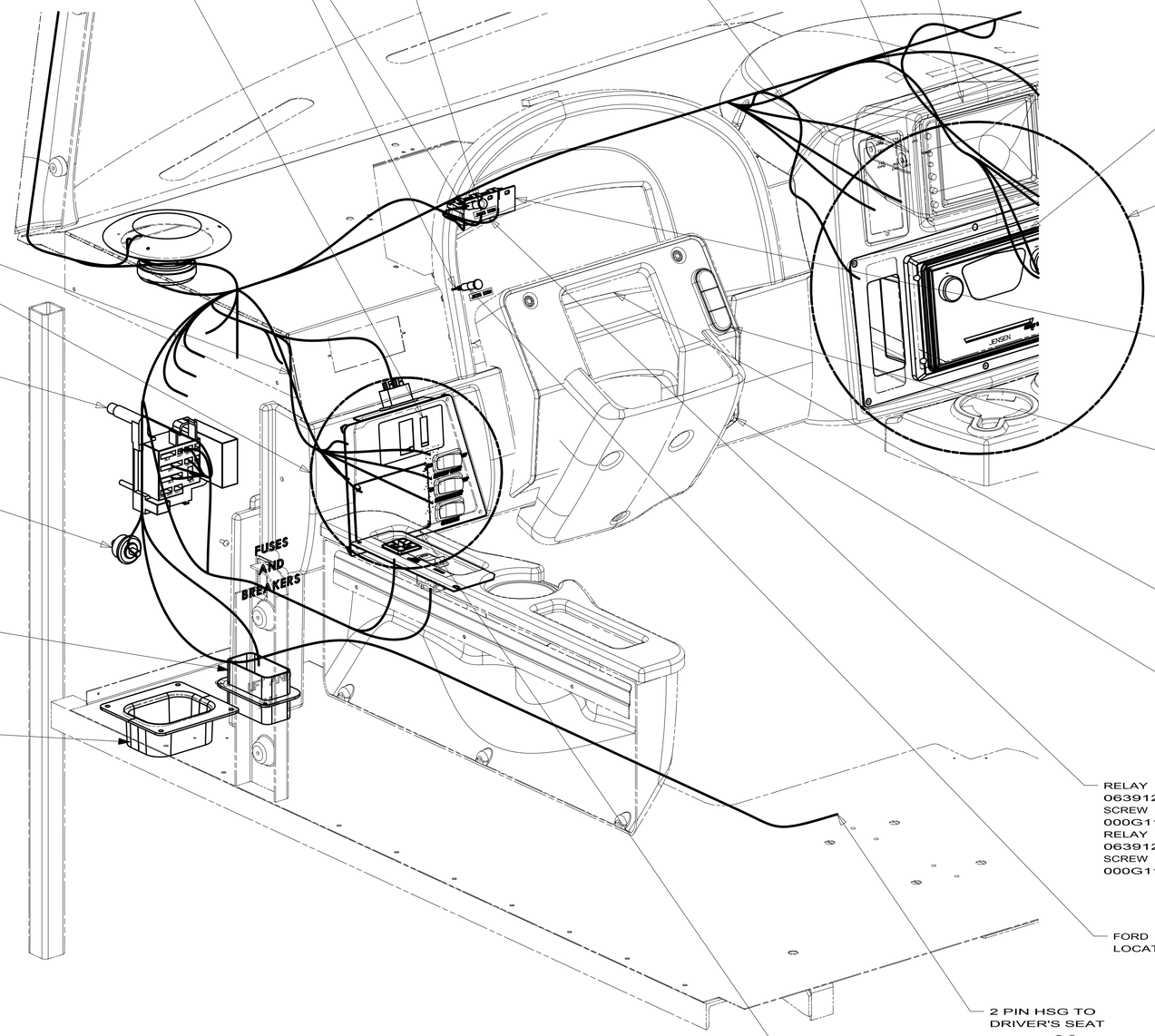

SEE RADIO INSTL

DETAIL DB

RELAY
063912-02-000
SCREW
000G11-08-08B

INFORMATION SWITCH
BEZEL-SWITCH
172173-01-01A
CLAMP-BEZEL
172175-01-02B
SCREW
000G11-08-08B (2)
1 5

CLUSTER
CHASSIS SUPPLIED

FORD DIAGNASTIC CONNECTOR
NUT-SPEED
040921-03-000
SCREW
000G11-10-10U(2)

RELAY
063912-02-000
SCREW
000G11-08-08B
53Z

RELAY
063912-02-000
SCREW
000G11-08-08B
28X

FORD LOCATION

2 PIN HSG TO DRIVER'S SEAT
DETAIL GC

SEE LEVELING SYSTEM INSTL

WIRE ASM-IP,MAIN

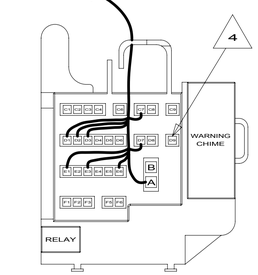

VIEW CB
COURTESY CENTER
(CHASSIS SUPPLIED) 1PR

D-SERIES

60M HYDRAULIC LEVEL JACKS-AUTO
53Z WTR HTR-6GAL/110/LP/MTR/AUTO
28X MIRRORS-EXTERIOR W/DEFROST
1PR WORKHORSE 22,000#-19.5 TIRE
265 CODES/STANDARDS-CSA/CMVSS
1B1 CODES/STANDARDS USA

1B1 265

5 2009 FORD CHASSIS.

4 CONNECT CHASSIS SUPPLIED HOUSING LABELED "SEAT BELT BYPASS" TO POSITION D9 IN CONVENIENCE CENTER.

3 WIRING FROM LEVELING SYSTEM. SEE LEVELING SYSTEM INSTL. FOR ADDITIONAL INFORMATION

2 CONNECT POSITIVE WIRE TO TERMINAL MARKED WITH A "+".

1 CHASSIS SUPPLIED

NOTES:

DETAIL CA

FOR ELECTRICAL TORQUE SPECIFICATIONS SEE DWG NO. 128783-01-000

X-X FOR ELECTRICAL CALLOUTS SEE DWG NO. 121339-01-000

FIRST USED
10 D,J,K-SER

DO NOT SCALE DRAWING

TITLE:
WIRING INSTL-FRONT END

SHEET 3 PART NO 169925 REV

2/18/2010

DWG NO 169925

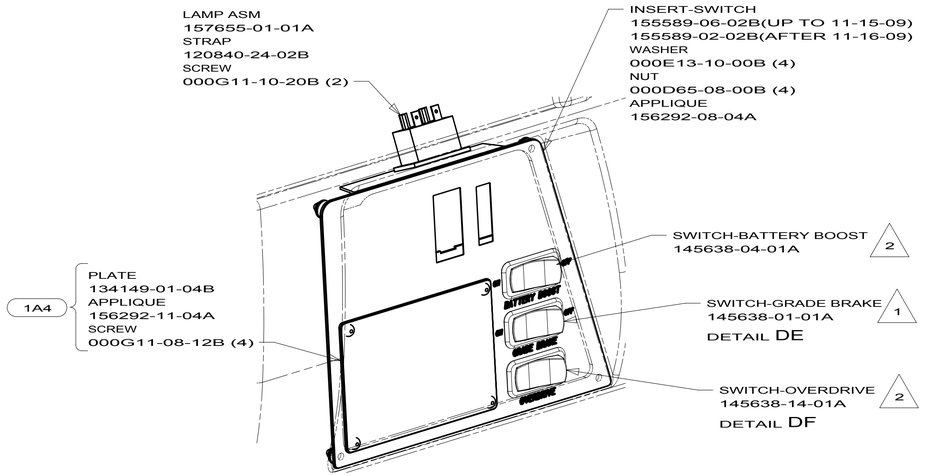

DETAIL DA 1PR

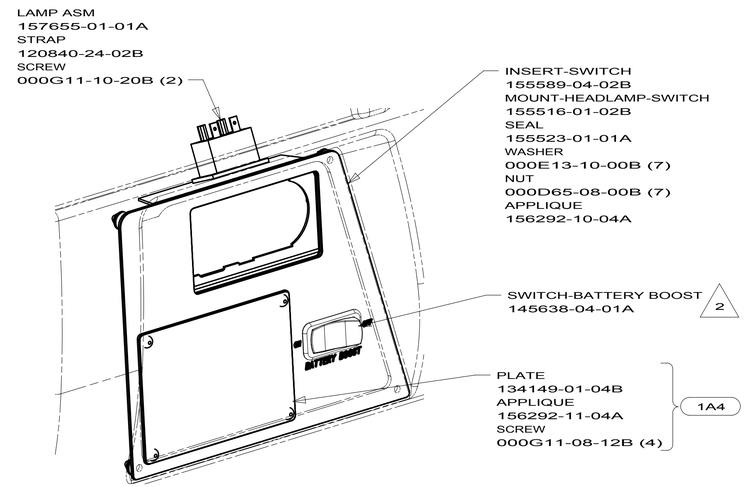

DETAIL DA 16L

D-SERIES

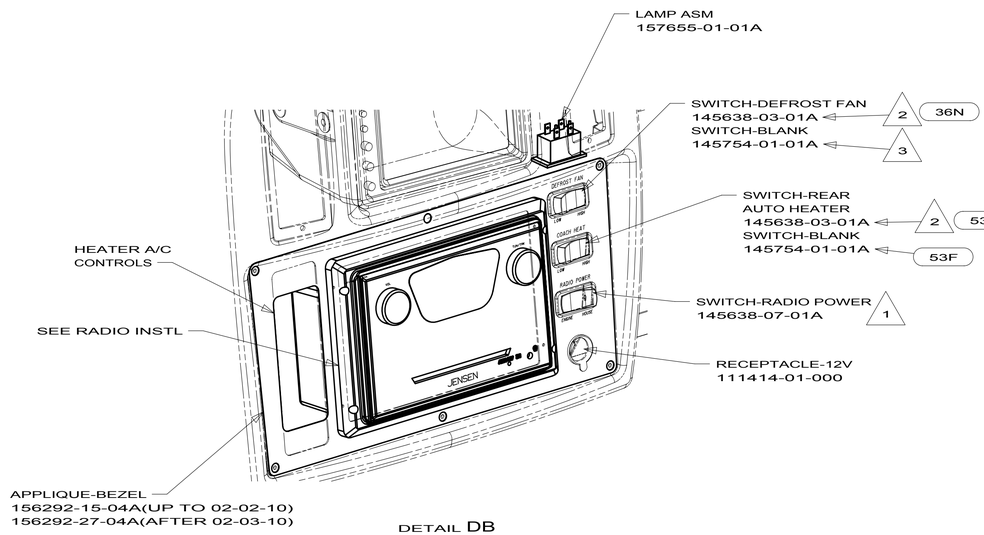

DETAIL DB

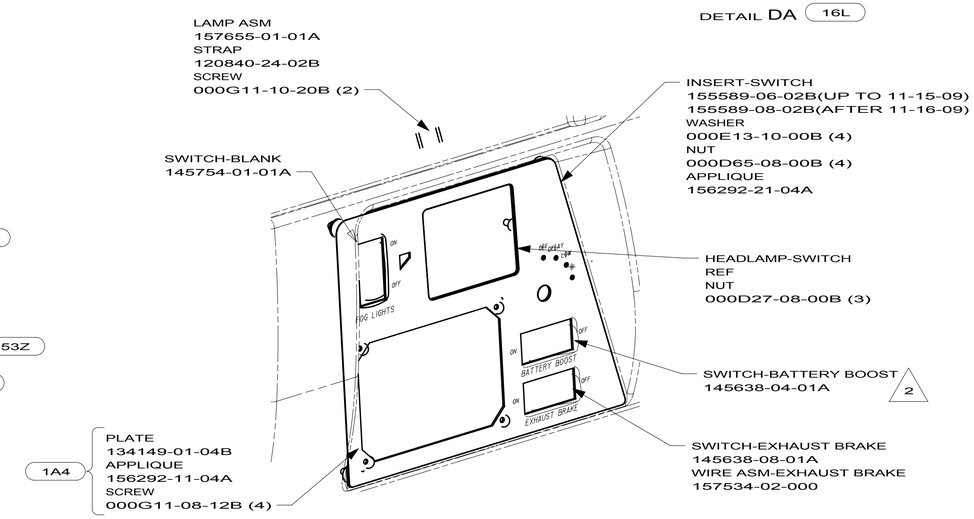

DETAIL DA 1LL

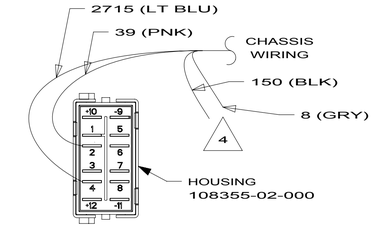

DETAIL DE
(GRADE BRAKE
SWITCH)

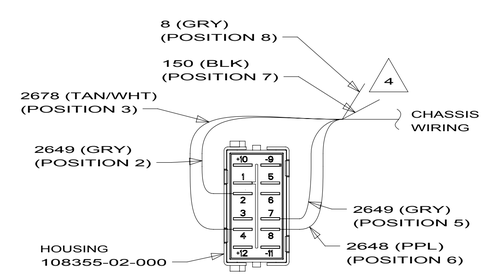

DETAIL DF
(OVERDRIVE
SWITCH)
5

53Z	WTR HTR-6GAL/110/LP/MTR/AUTO
53F	WATER HEATER-ELEC. IGNITION
36N	FANS-DEFROSTER, AUXILIARY
1A4	LEVELING JACK WITHOUT
1PR	WORKHORSE 22,000#-19.5 TIRE
1LL	FRTL(FRED) 27,000#-22.5 TIRE
16L	FORD 22,000#-22.5 AL WHL
16K	FORD CHASSIS 22,000
265	CODES/STANDARDS-CSA/CMVSS
1B1	CODES/STANDARDS USA

1B1 265

7 WITH SWITCH INSTALLED THIS SIDE OF SWITCH WILL FACE LEFT SIDEWALL.

6 DETAIL IS LOOKING AT SWITCH FROM THE BACK SIDE OF SWITCH AS ITS INSTALLED.

5 POSITIONS NOTED IN PARENTHESIS ARE LOCATIONS IN WORKHORSE SUPPLIED HOUSING.

4 REMOVE TERMINALS & TAPE BACK TO LOOM.

3 WITHOUT 36N

2 SEE DETAIL DC FOR ORIENTATION.

1 SEE DETAIL DD FOR ORIENTATION.

NOTES:

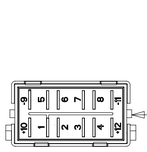

DETAIL DC
(MOUNTED
HORIZONTALLY)
7 6

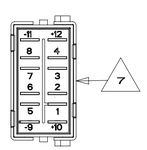

DETAIL DC
(MOUNTED
VERTICALLY)
7 6

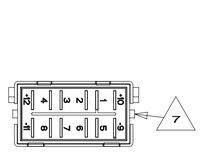

DETAIL DD
(MOUNTED
HORIZONTALLY)
7 6

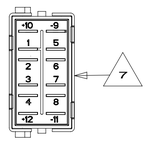

DETAIL DD
(MOUNTED
VERTICALLY)
7 6

FOR ELECTRICAL TORQUE SPECIFICATIONS SEE DWG NO. 128783-01-000

X-X FOR ELECTRICAL CALLOUTS SEE DWG NO. 121339-01-000

FIRST USED
10 D,J,K-SER

DO NOT SCALE DRAWING

TITLE:
WIRING INSTL-FRONT END

SHEET 4 | PART NO 169925 | REV

2/18/2010

DWG NO 169925

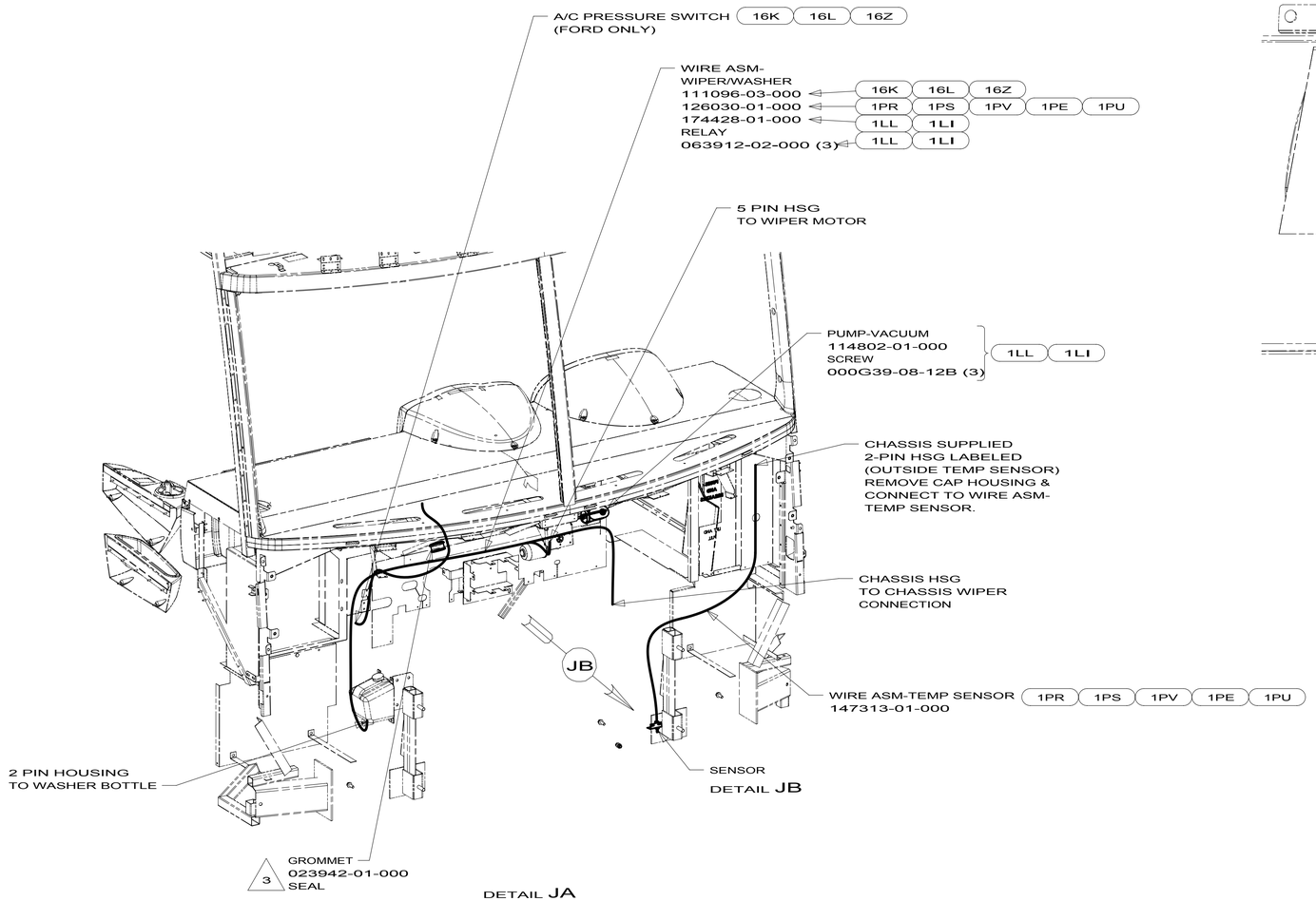

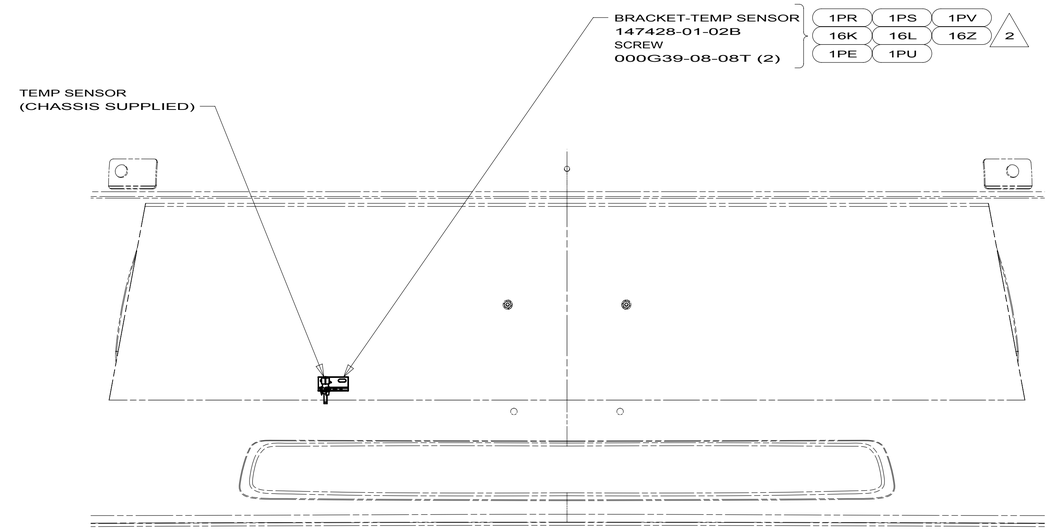

DETAIL JB
(NOT INCLUDED ON FREIGHTLINER CHASSIS)

1LI	FRTL(FRED)22K-300HP 22.5TIRE
1PU	WKHRSE 22K 230HP DSL 22.5TIR
1PE	WORKHORSE 20,500 DSL 230HP
1PV	WORKHORSE 24,000#-22.5 TIRE
1PS	WORKHORSE 22,000#-22.5 TIRE
1PR	WORKHORSE 22,000#-19.5 TIRE
1LL	FRTL(FRED) 27,000#-22.5 TIRE
16Z	FORD 24,000#-22.5 ALUM WHEEL
16L	FORD 22,000#-22.5 AL WHL
16K	FORD CHASSIS 22,000
265	CODES/STANDARDS-CSA/CMVSS
1B1	CODES/STANDARDS USA

NOTES:

1. GATHER ALL EXCESS WIRE AFTER MAKING ALL CONNECTIONS. BUNDLEAND SECURE WITH WIRE TIE 8343-01-000 OR 93147-01-000.

2 MOUNT SENSOR OR SENSOR BRACKET TO HORIZONTAL TUBE ON FIBERGLASS AS SHOWN.

3 ROUTE WIRES THROUGH HOLE IN STEEL.

FOR ELECTRICAL TORQUE SPECIFICATIONS SEE DWG NO. 128783-01-000

X-X FOR ELECTRICAL CALLOUTS SEE DWG NO. 121339-01-000

1B1 265

FIRST USED 10 D,J,K-SER

DO NOT SCALE DRAWING

TITLE: WIRING INSTL-FRONT END

SHEET 9 | PART NO 169925 | REV

2/18/2010

DWG NO 169847

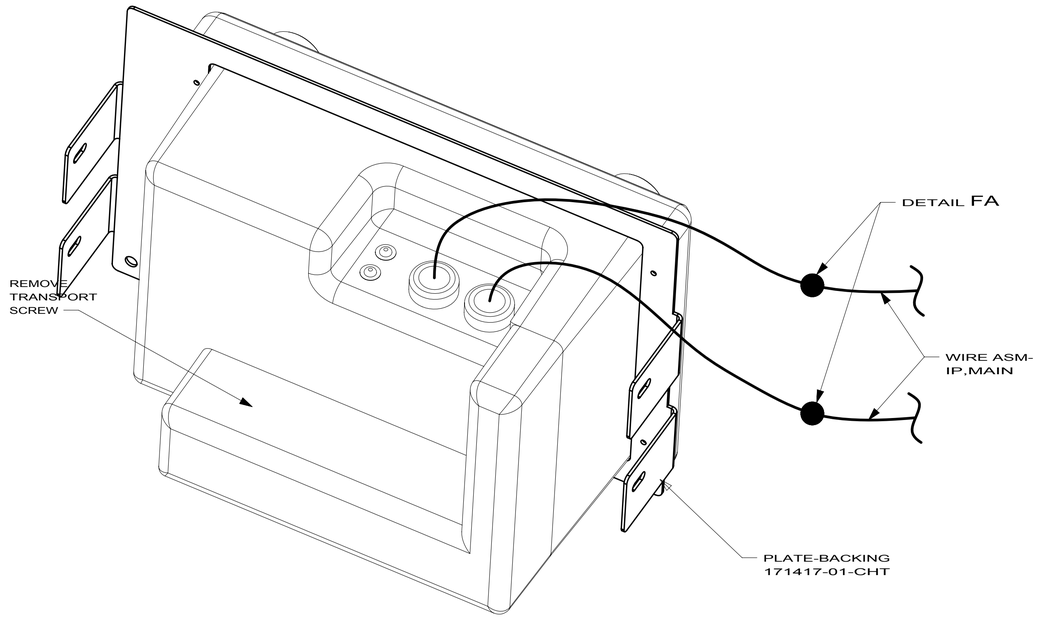

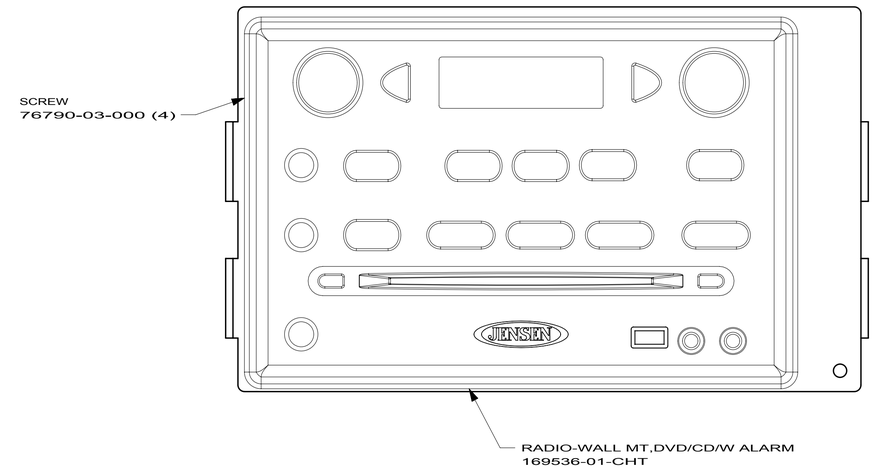

255 D-SERIES

255 E-SERIES

169847-05

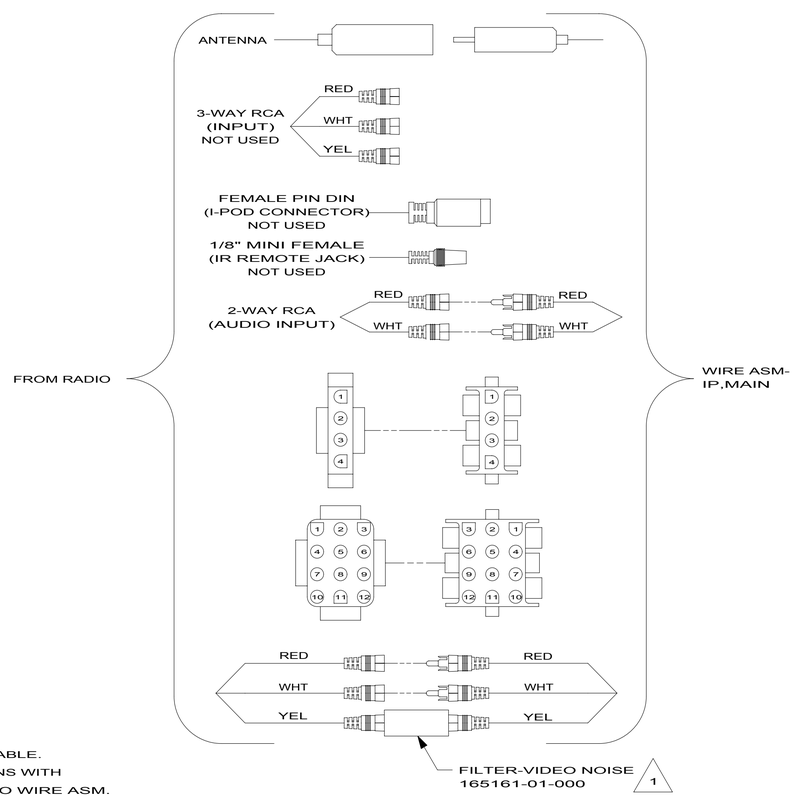

DETAIL FA 40B

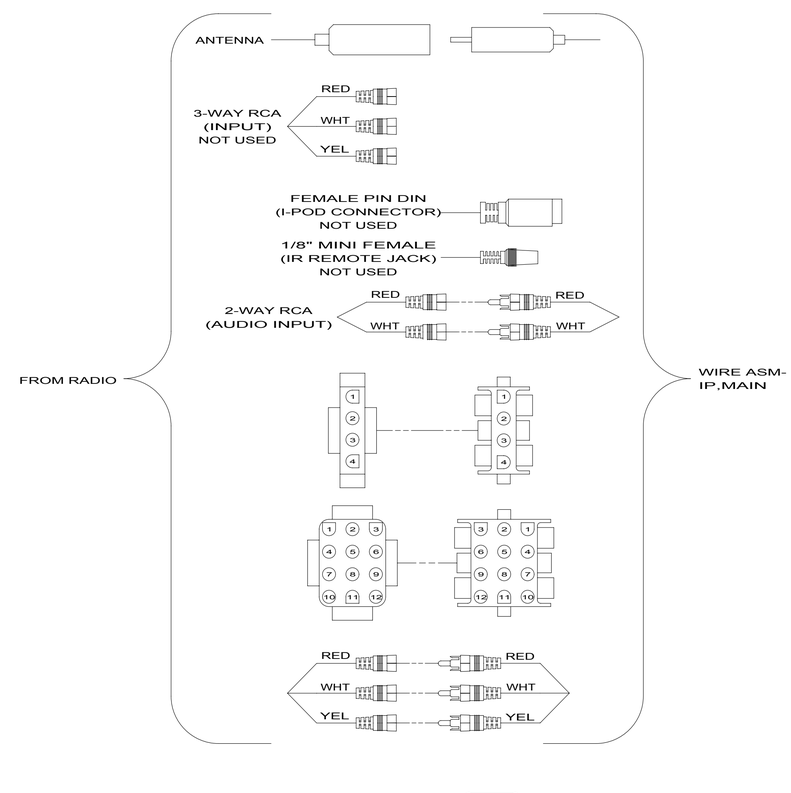

DETAIL FA 40A

255 RADIO/AM/FM/CD/DVD PLAYER

40B INVERTER-DC/AC, 300 WATT

40A INVERTER-DC/AC WITHOUT

255 RADIO/AM/FM/CD/DVD PLAYER

255

1 CONNECTS IN-LINE OF YELLOW VIDEO CABLE. WRAP BOTH ENDS OF FILTER CONNECTIONS WITH TAPE 8363-01-000 TO SECURE FILTER TO WIRE ASM.

NOTES:

FIRST USED	09 D,E-SERIES
	DO NOT SCALE DRAWING
TITLE:	RADIO INSTL
SHEET 5	PART NO 169847 REV

2/26/2010

169536-01-01A

KEY	PART NUMBER	U/M	DESCRIPTION	VENDOR NO.
	169536-01-700	EA	REMOTE - SERVICE PACK	PSVCAWM970

COPYRIGHT © 2009 WINNEBAGO INDUSTRIES INC.

DWG NO 169914

CONTROLLER-POWER
156676-01-000
BOX
1B1 133070-01-000
265 133070-02-000
SCREW
G13-07-12B (4)
CONNECTOR
58028-01-000 (3)
TUBING-VINYL
8041-02-000 (150 MM)

RECEPTACLE-DUPLEX
172839-01-01A(UP TO 01-24-10)
176149-01-01A(AFTER 01-25-10)
PLATE-COVER
176159-01-01A(AFTER 01-25-10, UP TO 02-07-10)
176568-01-01A(AFTER 02-08-10)

JA

DETAIL DB

RECEPTACLE-DUPLEX
172839-01-01A(UP TO 01-24-10)
176149-01-01A(AFTER 01-25-10)
PLATE-COVER
176159-01-01A(AFTER 01-25-10)

PLATE-WALL,ANT/CABLE 193
176294-01-01A
SCREW
G12-06-08U (2)

PLATE-WALL,
SATELLITE PREP
149557-04-02A

RCP-2 (DET DE)
SAT PREP

SUPPORT-MOUNTING,TV
168042-04-02B
SCREW
G11-08-12U (12)

RECEIVER-INFRARED
149750-01-000
(UP TO 09-20-09)

5 TRANSMITTER
149750-03-000
(UP TO 09-20-09)

BRACKET ASM-MOUNT,TV
164112-10-02B(UP TO 05-31-09)
164112-18-02B(AFTER 06-01-09)

TV-32",FLAT PANEL LCD
169151-02-000(UP TO 05-31-09)
173556-01-000(AFTER 06-21-09)
SCREW
0MG02B-06-016 (4)
WASHER
142195-01-CHT (4)

THROW IN
FRONT OVHD
FROM RCP-OVHD
DETAIL DD

RCP-SAT PREP
(PUR)
TO RCP-POWER
CONTROLLER

DETAIL DE 40A

RCP-SAT PREP
(PUR-2)
WIRE FROM
ROOF
TO RCP-POWER
CONTROLLER

DETAIL DE 40B

CONTROLLER-TV POWER

CONNECT
BLK TO BLK
WHT TO WHT
GRN TO BARE
COPPER WIRE
TO THROW IN 110V WIRE

110V TV
RECEPTACLE

110V THROW IN WIRE 6
TO COMPONENT RCP

THROW IN-FRONT TV 4

CONNECT WIRE 6
ASM-EXTENSION
TO 2 PIN HOUSING
ON IP,MAIN
WITH CIRCUITS
KE & ME

12V RELAY

BRN CONTROL WIRES
CONNECT TO WIRE ASM-EXTENSION
149130-02-006
YEL& WHT CIRCUITS

DETAIL DB
(SHOWN FROM
THE SIDE)

MODULE-INTERFACE,IR
149750-04-000(UP TO 09-20-09)
SCREW
G67-08-08U (4)(UP TO 09-20-09)
CONNECTS TO 2 PIN
HOUSING ON WIRE
ASM-ROOF
DETAIL DA

GROMMET-EDGE LINER
114208-05-000

RCP-OVHD
(PUR)
FROM RCP-2
COMPONENT
DETAIL DC
THROW IN
FRONT OVHD
TO RCP-
SAT PREP

DETAIL DD 40A

RCP-OVHD
(PUR)
FROM RCP-2
COMPONENT
DETAIL DC

DETAIL DD 40B

TRANSMITTER TO FUTURE
SATELLITE RECEIVER

NOT USED

POWER
12VDC
+ - 1 2
EMITTERS
AVI-10
CONNECTING BLOCK
EMITTERS
IR
RECEIVER
3 4

MODULE-INTERFACE

NOT USED

CABLE-RECEIVER,IR
149750-06-000(UP TO 09-20-09)

TO RECEIVER-INFRARED

DETAIL DA(UP TO 09-20-09)

CROSSOVER COIL-
SPEAKER
150140-02-000
CLAMP-CLOSED
10497-02-000
SCREW
G67-08-08U
CONNECTS TO
2 PIN HOUSING
ON WIRE ASM-ROOF

CROSSOVER NETWORK
BX-SPEAKER
150140-01-000
CONNECTS TO (2)
4 PIN HOUSINGS
FROM WIRE ASM-ROOF

SPLITTER-TV,2 WAY
86756-01-000
SCREW
G67-08-08U (2)

RCP-COMPONENT
(PUR)
WIRE FROM
SIDEWALL
WIRE FROM
ROOF
TO RCP-OVHD

DETAIL DC

6 ROUTE 110V & 12V IN OPPOSITE ENDS OF ELECTRICAL BOX.

5 ROUTE TRANSMITTER THROUGH CUTOUT AND COIL FOR FUTURE USE.

4 SEE 110V LOAD CENTER FOR ADDITIONAL INFORMATION.

3. WHERE WIRES PASS THROUGH HOLES IN STEEL AND NOT OTHERWISE PROTECTED, USE GROMMET 92908-02-000.

2. ALL WIRES TO BE SECURED WITH CLAMP 10495-01-000 OR CLIP 80734-01-000 EVERY 600MM. USE SCREW G67-10-12B UNLESS OTHERWISE SPECIFIED.

1. 110V WIRE TO BE CLAMPED WITH CLAMP 10497-05-000 WITHIN 200MM OF OUTLET BOXES, USE SCREW G67-10-12B.

NOTES:

X-X

FOR ELECTRICAL CALLOUTS SEE DWG NO. 121339-01-000

FOR ELECTRICAL TORQUE SPECIFICATIONS SEE DWG NO. 128783-01-000

40B INVERTER-DC/AC, 300 WATT
40A INVERTER-DC/AC WITHOUT
193 TV ANTENNA-AMPLIFIED SYSTEM
42K TV-32" COLOR,STEREO W/REMOTE
265 CODES/STANDARDS-CSA/CMVSS
1B1 CODES/STANDARDS USA

1B1 265 42K

FIRST USED
10 D-SERIES

DO NOT SCALE DRAWING

TITLE:
WIRING INSTL-TV/DVD

SHEET 4 | PART NO 169914 | REV

3/17/2010

DWG NO 169914

UP TO 05-31-09

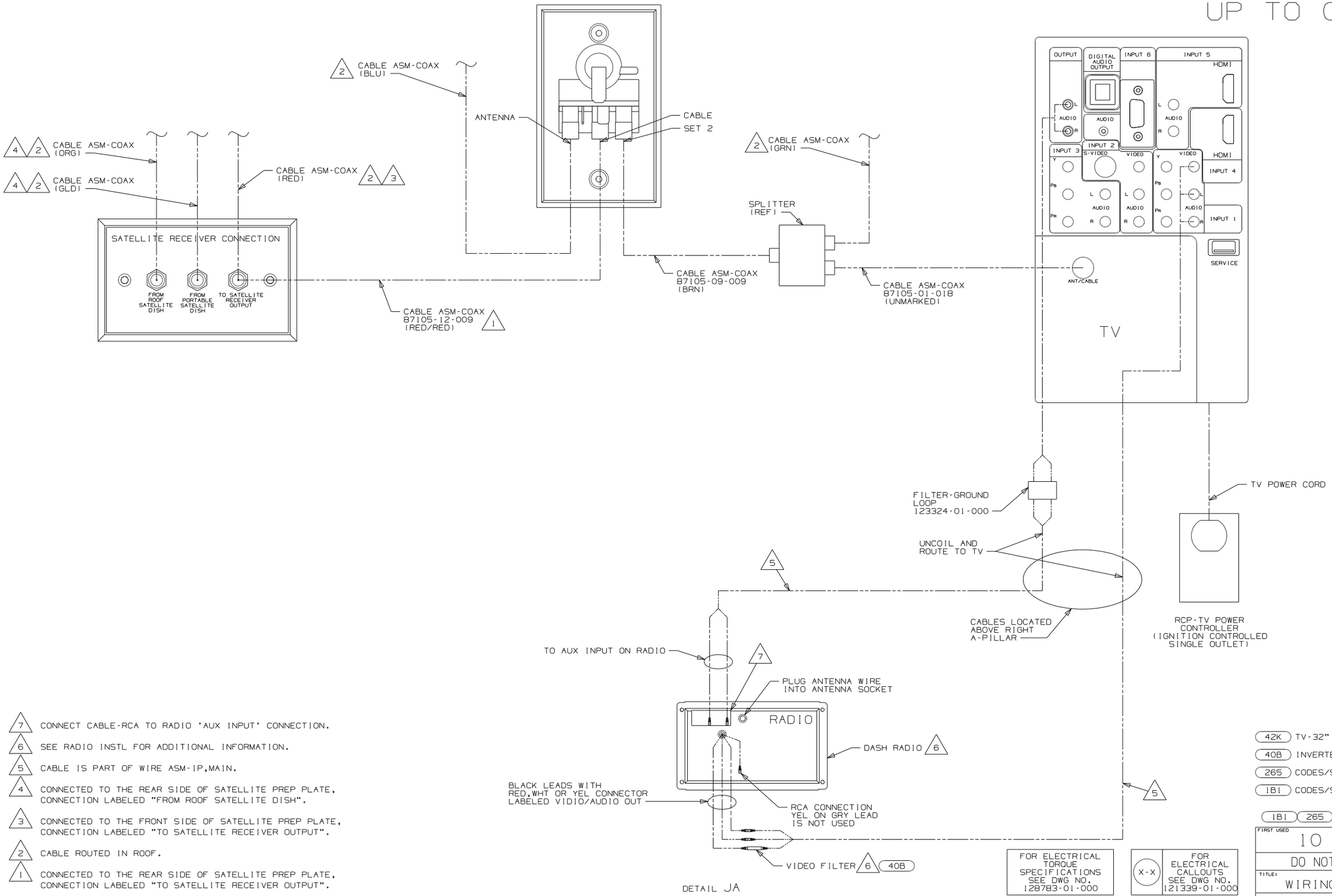

7 CONNECT CABLE-RCA TO RADIO 'AUX INPUT' CONNECTION.

6 SEE RADIO INSTL FOR ADDITIONAL INFORMATION.

5 CABLE IS PART OF WIRE ASM-IP,MAIN.

4 CONNECTED TO THE REAR SIDE OF SATELLITE PREP PLATE, CONNECTION LABELED "FROM ROOF SATELLITE DISH".

3 CONNECTED TO THE FRONT SIDE OF SATELLITE PREP PLATE, CONNECTION LABELED "TO SATELLITE RECEIVER OUTPUT".

2 CABLE ROUTED IN ROOF.

1 CONNECTED TO THE REAR SIDE OF SATELLITE PREP PLATE, CONNECTION LABELED "TO SATELLITE RECEIVER OUTPUT".

NOTES:

FOR ELECTRICAL TORQUE SPECIFICATIONS SEE DWG NO. 128783-01-000

X-X FOR ELECTRICAL CALLOUTS SEE DWG NO. 121339-01-000

42K TV-32" COLOR,STEREO W/REMOTE

40B INVERTER-DC/AC, 300 WATT

265 CODES/STANDARDS-CSA/CMVSS

1B1 CODES/STANDARDS USA

1B1 265 42K

FIRST USED

10 D-SERIES

DO NOT SCALE DRAWING

TITLE: WIRING INSTL-TV/DVD

SHEET 9A

PART NO 169914

REV

6/18/2009

DWG NO 169914

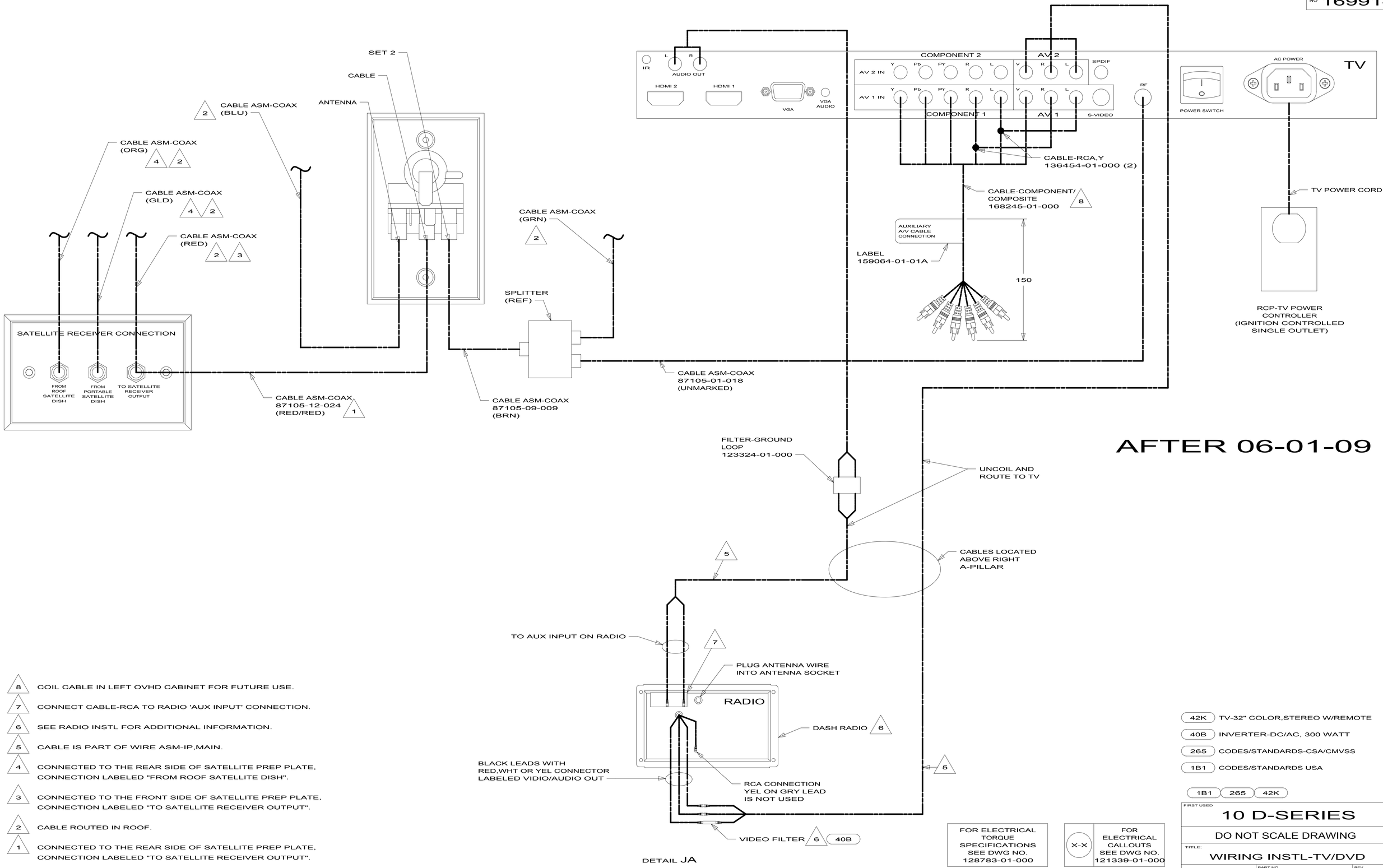

AFTER 06-01-09

8 COIL CABLE IN LEFT OVHD CABINET FOR FUTURE USE.

7 CONNECT CABLE-RCA TO RADIO 'AUX INPUT' CONNECTION.

6 SEE RADIO INSTL FOR ADDITIONAL INFORMATION.

5 CABLE IS PART OF WIRE ASM-IP,MAIN.

4 CONNECTED TO THE REAR SIDE OF SATELLITE PREP PLATE, CONNECTION LABELED "FROM ROOF SATELLITE DISH".

3 CONNECTED TO THE FRONT SIDE OF SATELLITE PREP PLATE, CONNECTION LABELED "TO SATELLITE RECEIVER OUTPUT".

2 CABLE ROUTED IN ROOF.

1 CONNECTED TO THE REAR SIDE OF SATELLITE PREP PLATE, CONNECTION LABELED "TO SATELLITE RECEIVER OUTPUT".

NOTES:

FOR ELECTRICAL TORQUE SPECIFICATIONS SEE DWG NO. 128783-01-000

X-X FOR ELECTRICAL CALLOUTS SEE DWG NO. 121339-01-000

42K TV-32" COLOR,STEREO W/REMOTE

40B INVERTER-DC/AC, 300 WATT

265 CODES/STANDARDS-CSA/CMVSS

1B1 CODES/STANDARDS USA

1B1 265 42K

FIRST USED 10 D-SERIES

DO NOT SCALE DRAWING

TITLE: WIRING INSTL-TV/DVD

SHEET 9B PART NO 169914 REV

2/18/2010

DWG NO 169914

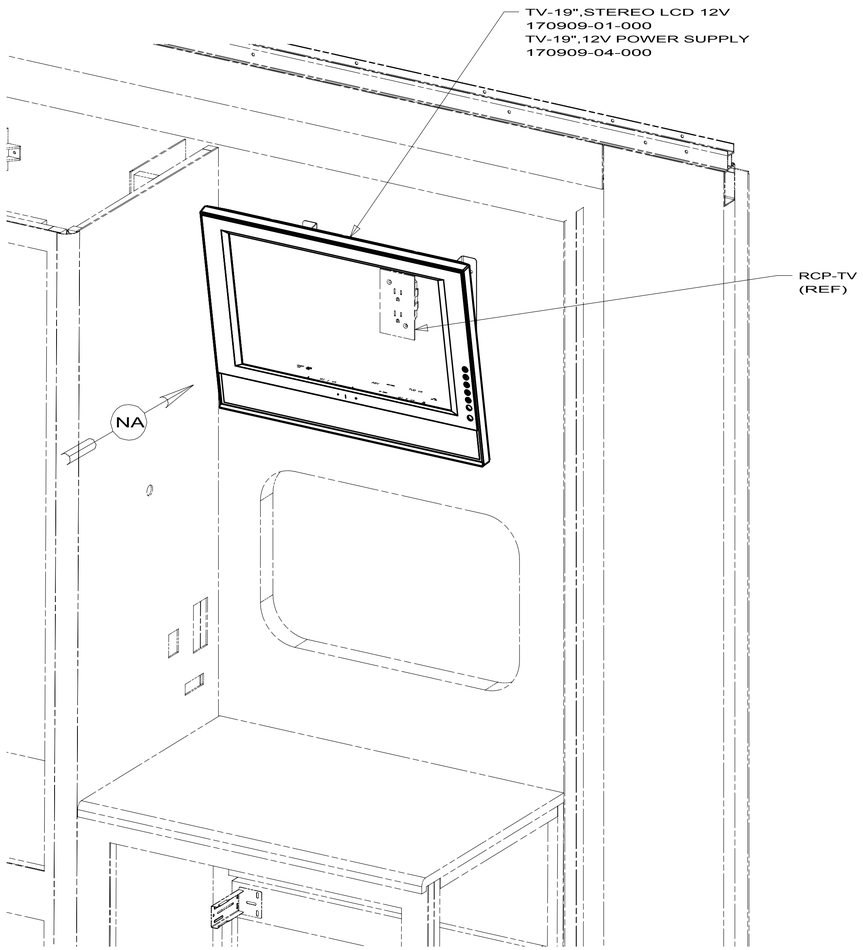

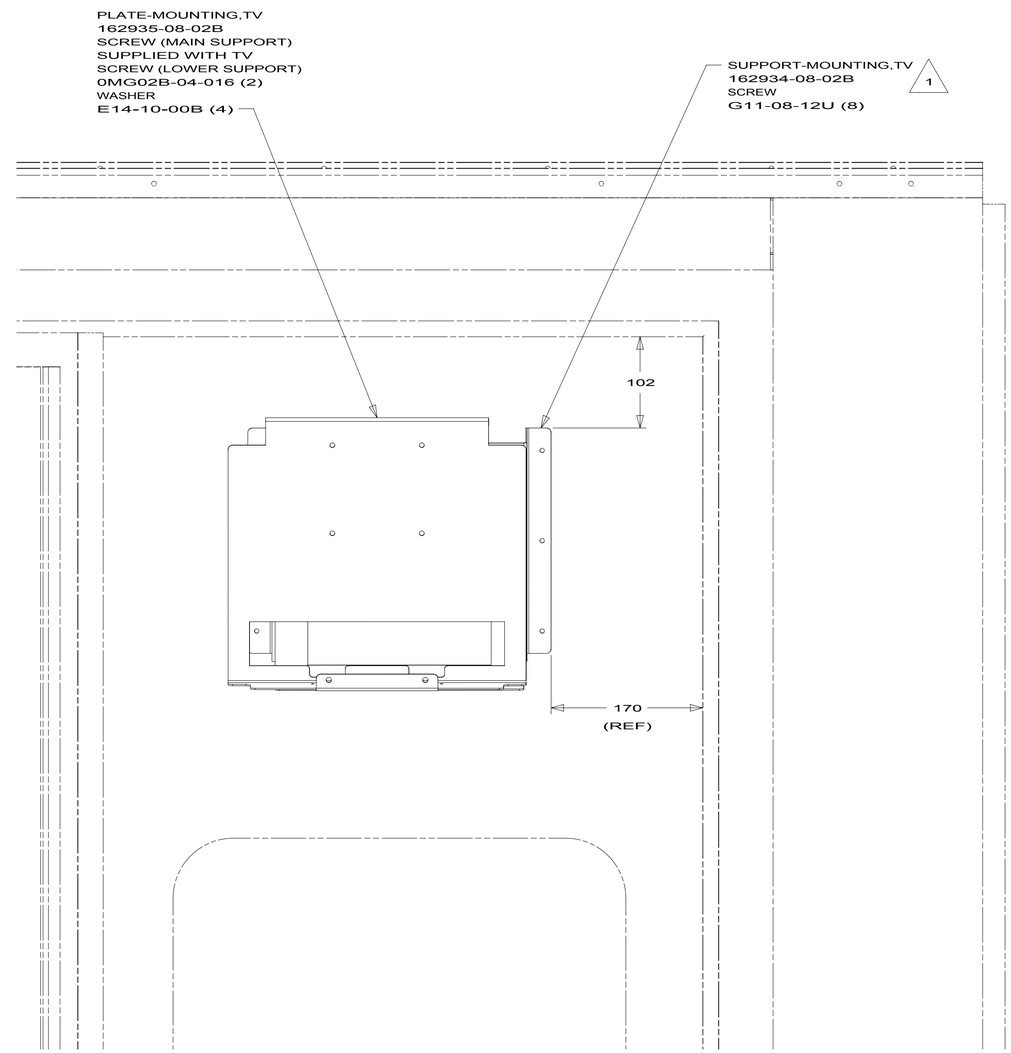

VIEW NA
(TV NOT SHOWN)

X-X	FOR ELECTRICAL CALLOUTS SEE DWG NO. 121339-01-000

FOR ELECTRICAL TORQUE SPECIFICATIONS SEE DWG NO. 128783-01-000

1JU TV (REAR)-19"COLOR, STEREO
265 CODES/STANDARDS-CSA/CMVSS
1B1 CODES/STANDARDS USA

1B1 265 1JU

FIRST USED
10 D-SERIES

DO NOT SCALE DRAWING

TITLE:
WIRING INSTL-TV/DVD

SHEET 13 | PART NO 169914 | REV

1 CENTER OVER WINDOW CUTOUT.

NOTES:

2/18/2010

169151-01-000, 169151-02-000

KEY	PART NUMBER	U/M	DESCRIPTION	VENDOR NO.
	169154-01-700	EA	REMOTE - TV	RRMCGA667WJSA

COPYRIGHT © 2009 WINNEBAGO INDUSTRIES INC.

173556-01-000

KEY	PART NUMBER	U/M	DESCRIPTION	VENDOR NO.
	173556-01-700	EA	REMOTE - SERVICE PACK	PSVCJE3208

COPYRIGHT © 2010 WINNEBAGO INDUSTRIES INC.