DWG NO 165257

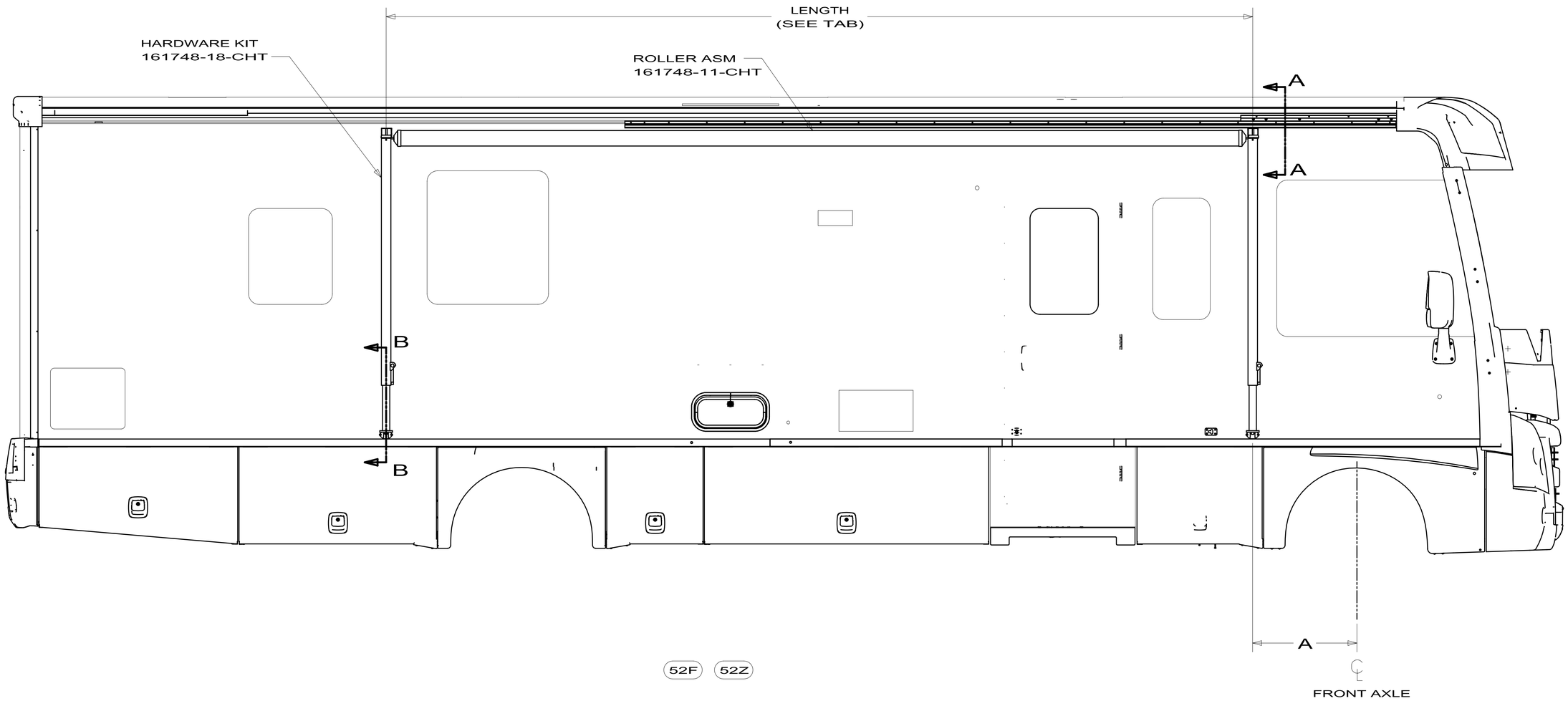

D31E
165257-03

FIRST USED	09 D31E
DO NOT SCALE DRAWING	
TITLE:	AWNING INSTL-09 D-SERIES
SHEET 2	PART NO 165257 REV

10/20/2009

RELEASE	REV A	DATE	DWG NO 172200

REV	ZONE	REVISION RECORD	DATE	DFTR-ORIG

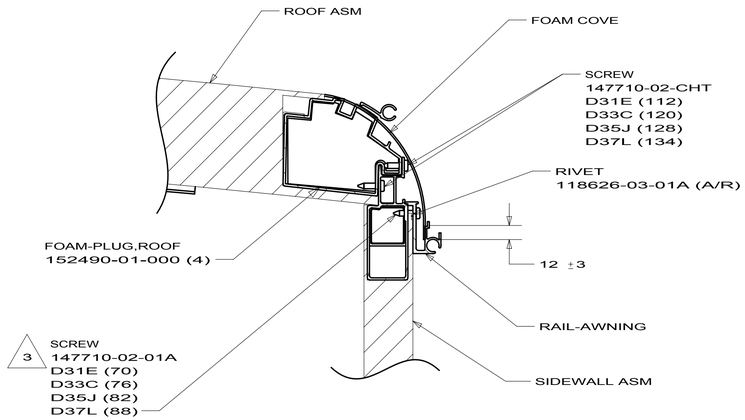

SECTION AA-AA

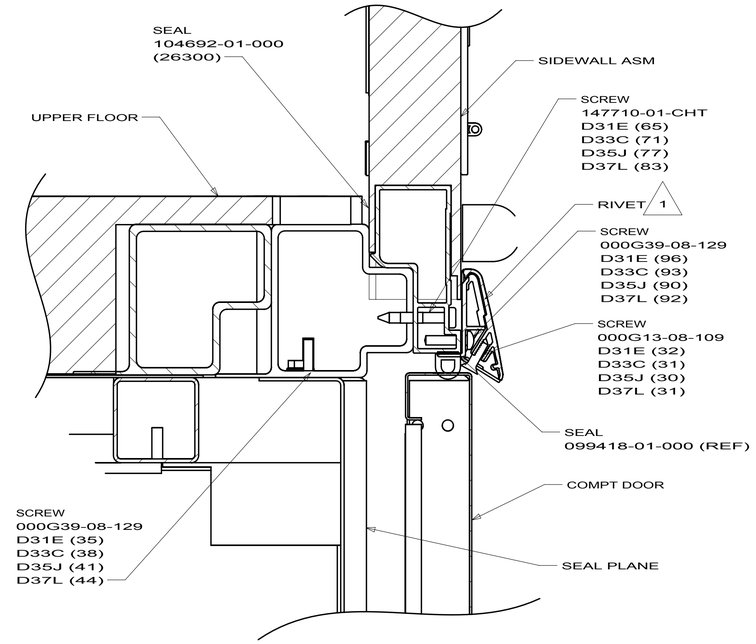

SECTION AB-AB

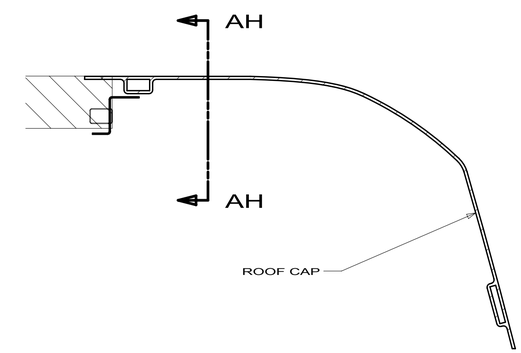

SECTION AC-AC

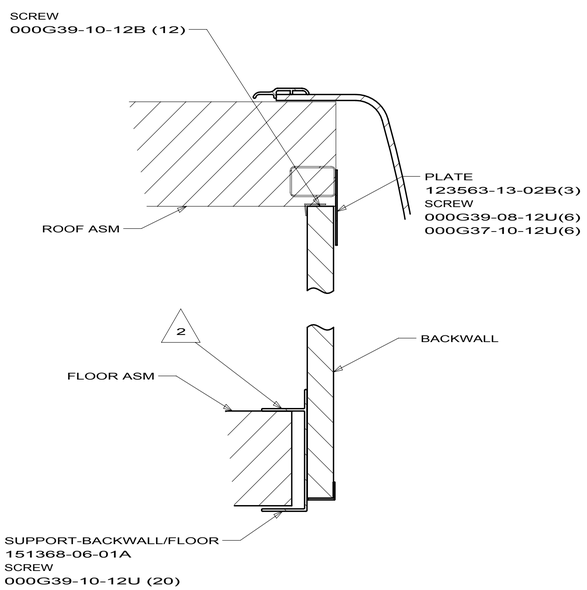

SECTION AD-AD

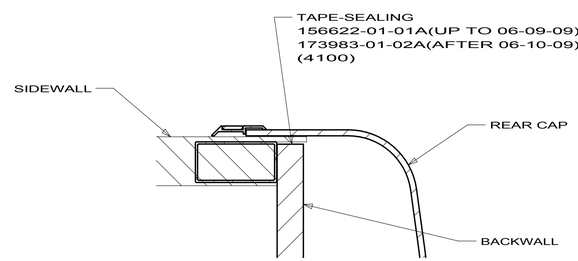

SECTION AE-AE

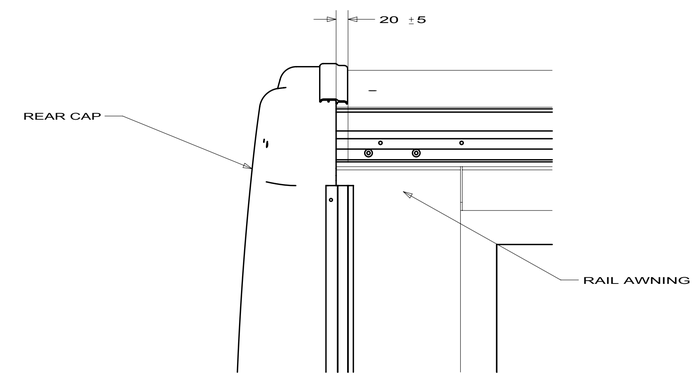

VEIW AK-AK

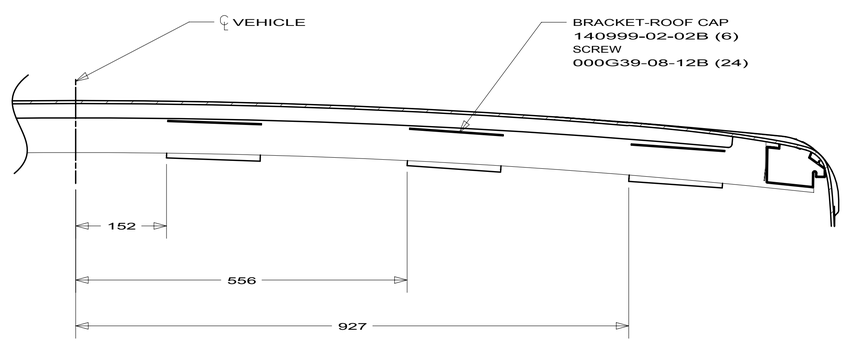

SECTION AH-AH

3. SCREW MUST BE LOCATED WITHIN 50MM OF RAIL-AWNING SPLICE. DRILL ADDITIONAL HOLES AND ADD SCREWS AS REQUIRED.

2. SEE ES0061 FOR CARPET ATTACHMENT AT BACKWALL.

1. DRILL A 4.88-4.98 DIA HOLE USING THE HOLES LOCATED EITHER SIDE OF THE TOOLING HOLES AS A TEMPLATE INSTALL RIVET 142980-01-CHT AS REQUIRED

NOTES:

WINNEBAGO INDUSTRIES

COPYRIGHT 2010
WINNEBAGO
INDUSTRIES, INC.

DFTR	ORIG. DATE
CHKR	ALL DIMENSIONS ARE IN MILLIMETERS
P.E.	
M.E.	FIRST USED
DSNR	10 D-SERIES

UNSPECIFIED TOLERANCES ARE:
WHOLE DIM (X) : 1
ONE-PLACE (X.X) : 1.5
TWO-PLACE (X.XX) : 0.50
ANGLE : 1°

MATERIAL:

THIRD ANGLE PROJECTION

DO NOT SCALE DRAWING

TITLE:
BODY INSTL-SECTIONS

SHEET 1 OF 2 | PART NO 172200 | REV

REF:

1/19/2010

DWG NO 172200

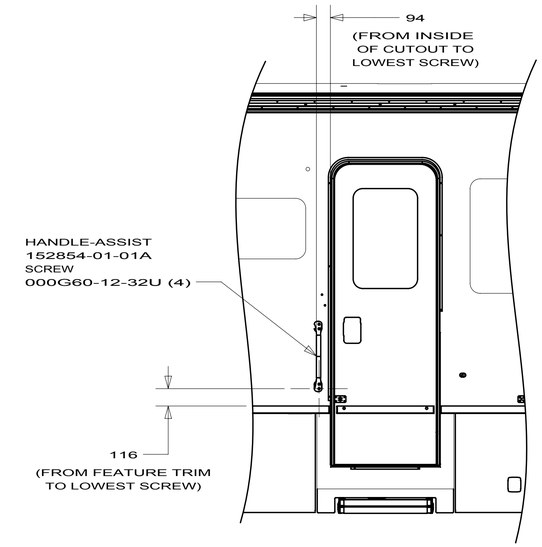

DETAIL AG

26F 26H

D31E, D33C & D35J ONLY

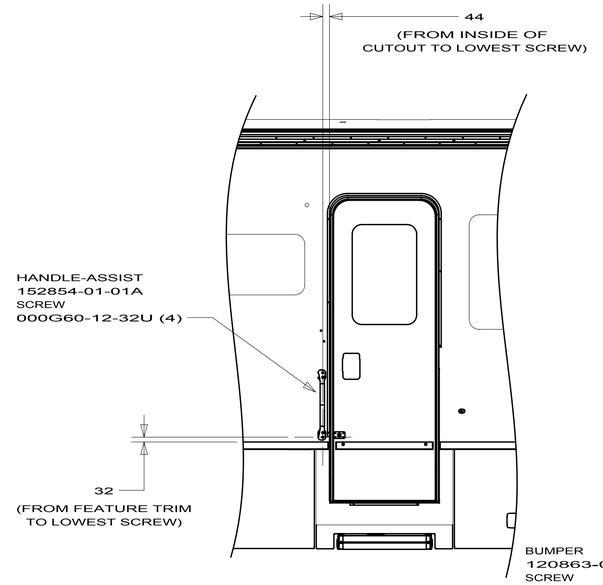

DETAIL AG

26F 26H

D37L ONLY

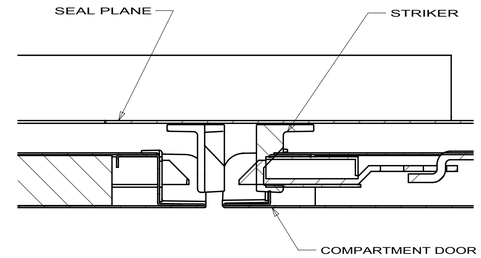

SECTION BC-BC

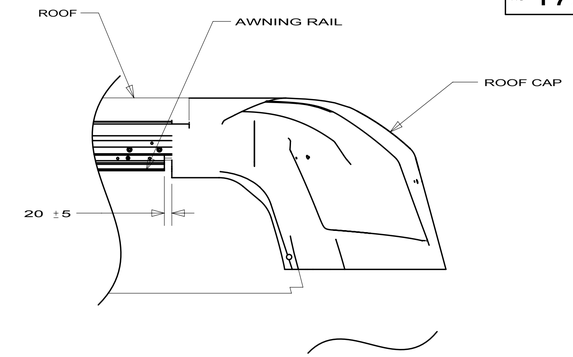

DETAIL AJ-AJ

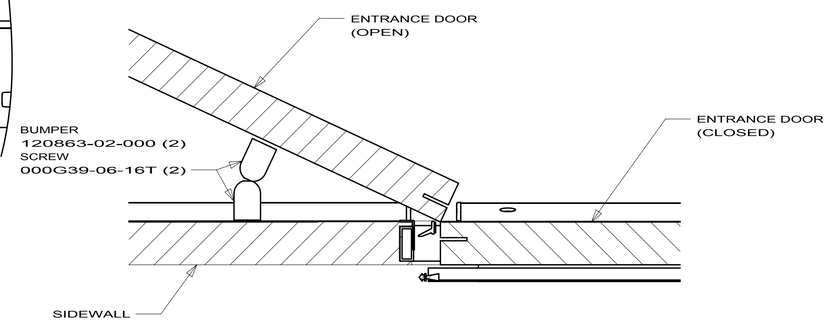

SECTION BA-BA

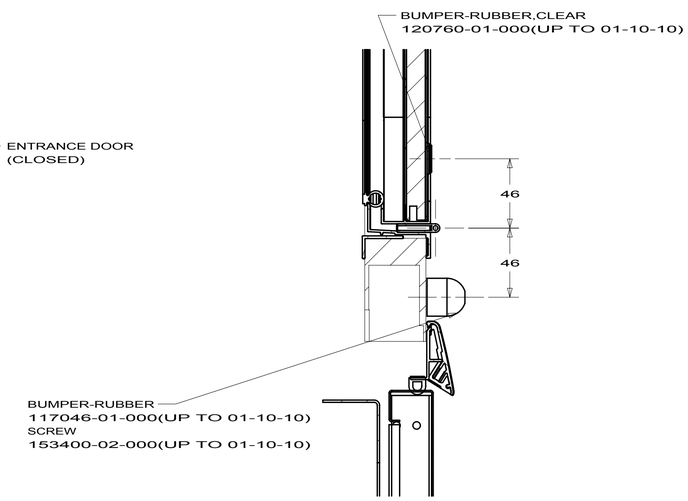

SECTION BD-BD

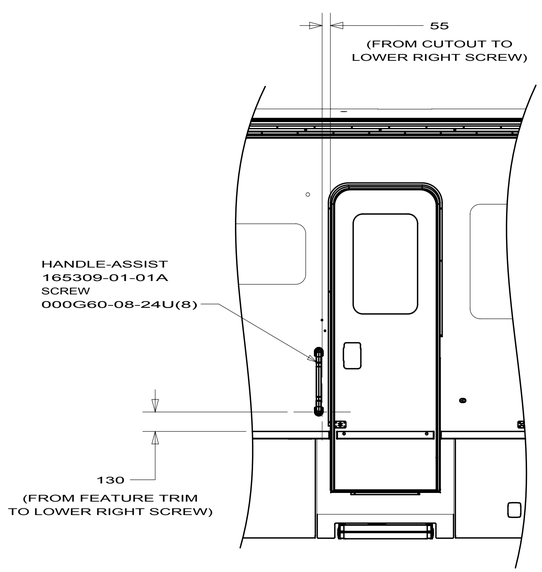

DETAIL AG

24C 27A 92A 24B

D31E, D33C & D35J ONLY

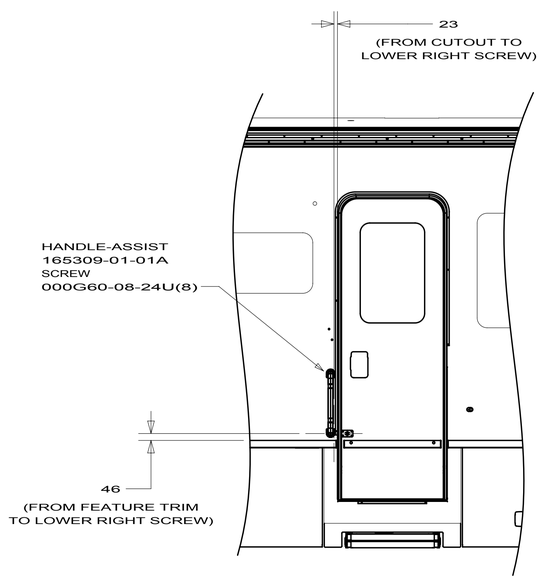

DETAIL AG

24C 27A 92A 24B

D37L ONLY

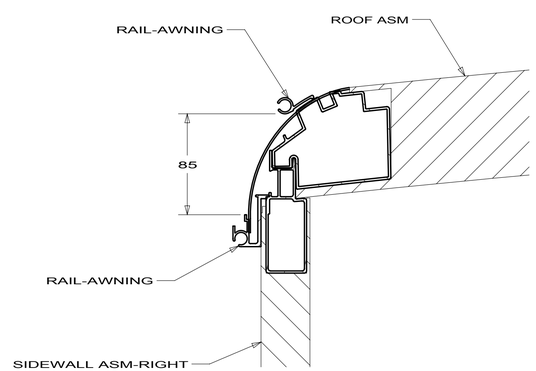

SECTION AL-AL

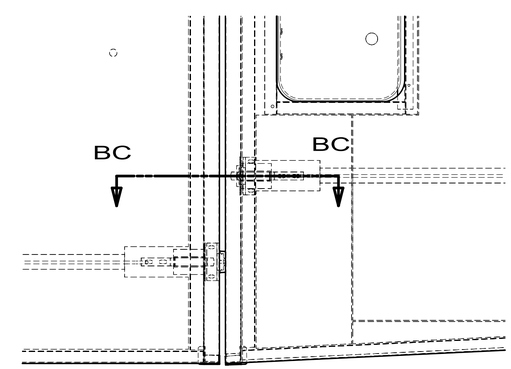

DETAIL BB

FIRST USED	10 D-SERIES
	DO NOT SCALE DRAWING
TITLE:	BODY INSTL-SECTIONS
SHEET 2	PART NO 172200 REV

1/19/2010

DWG NO	
172403-01	WIN
172403-02	ITA

RELEASE	REV A	DATE	DWG NO 172403
REV	ZONE	REVISION RECORD	DATE	DFTR-ORIG

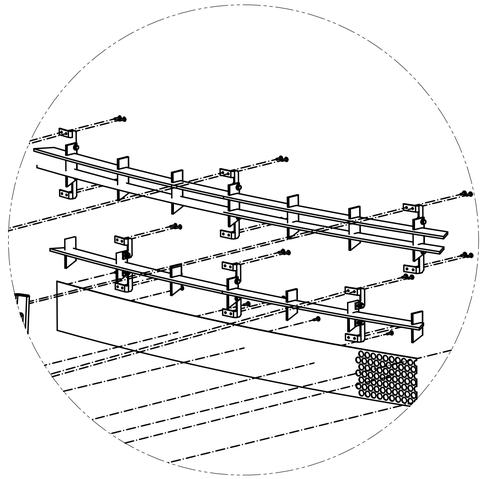

DETAIL AA

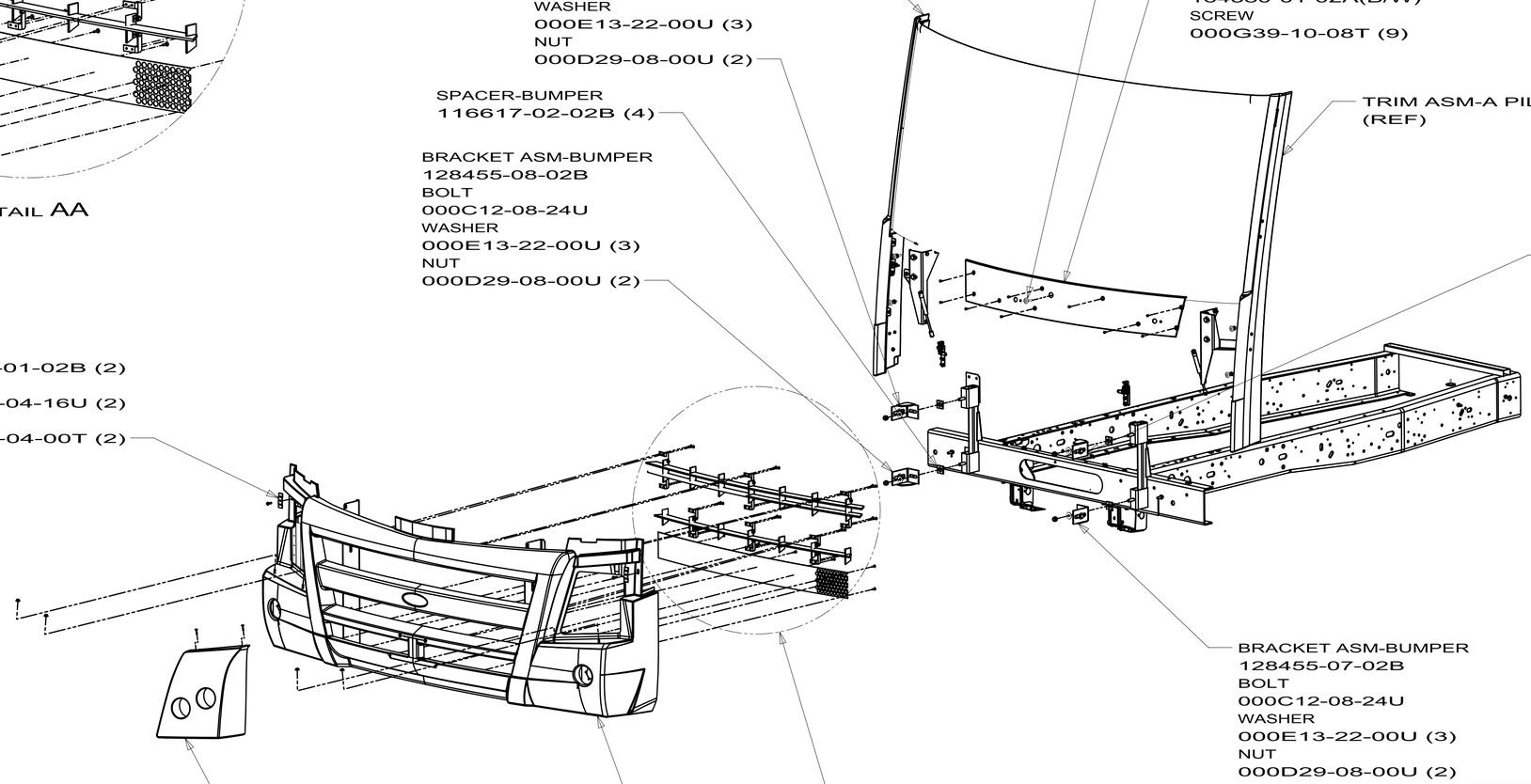

2. HOLE PATTERN OF MESH GRILLE SHOULD BE STRAIGHT FROM LEFT TO RIGHT

1. KEY 102328-01-000 (1) TO BE INSTALLED ON KEY RING IN MOTORHOME PLANT.

NOTES:

COPYRIGHT 2010
WINNEBAGO
INDUSTRIES, INC.

DFTR	ORIG. DATE
CHKR	ALL DIMENSIONS ARE IN MILLIMETERS
P.E.	
M.E.	FIRST USED
DSNR	10 D-SERIES

UNSPECIFIED TOLERANCES ARE:
WHOLE DIM (X) : 1.5
ONE-PLACE (X.X) : 1.5
TWO-PLACE (X.XX) : 0.50
ANGLE : 1°

MATERIAL:

THIRD ANGLE PROJECTION

DO NOT SCALE DRAWING

REFER TO ES0018 FOR FASTENER TIGHTENING GUIDELINES

TITLE:
BODY PANEL INSTL-FRONT

SHEET 1 OF 4 | PART NO 172403 | REV

REF: 1

3/30/2010

DWG NO 172403

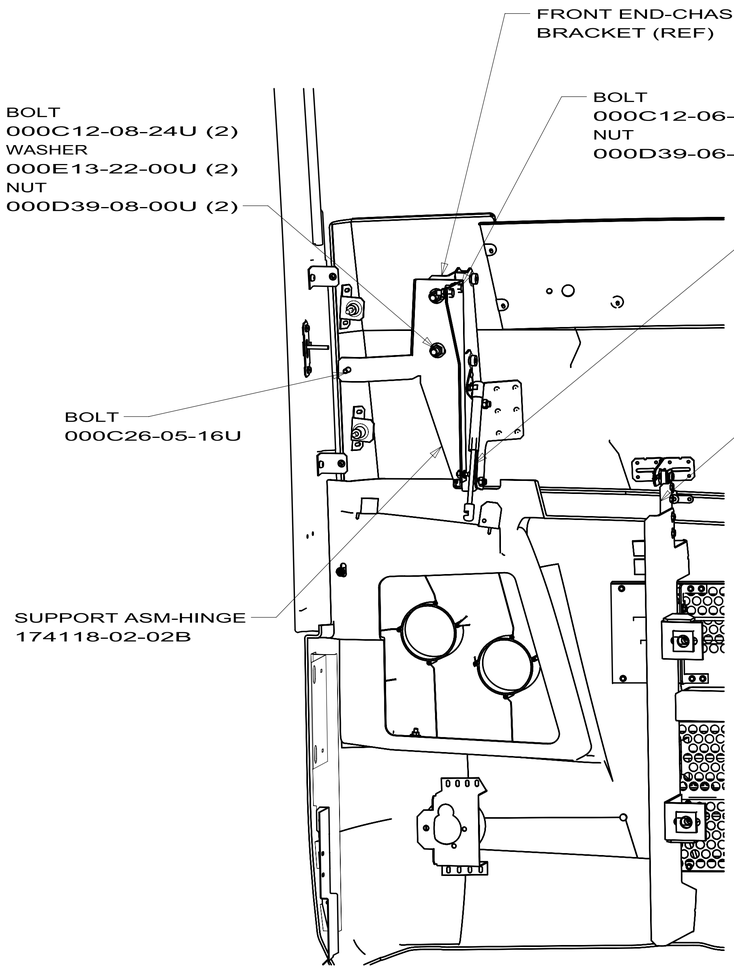

VIEW BA

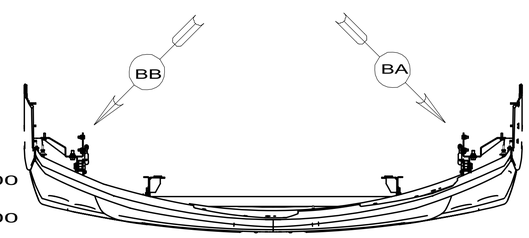

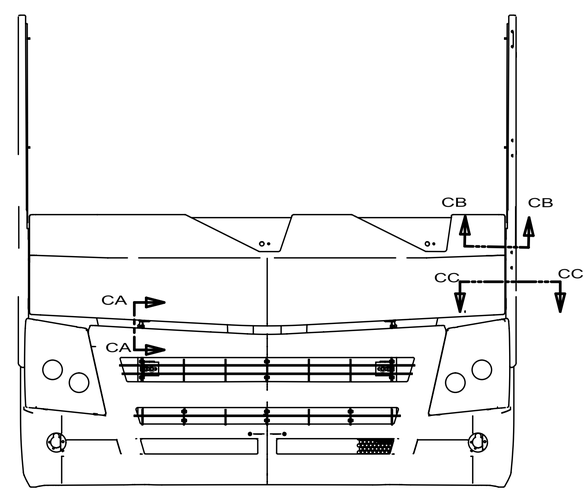

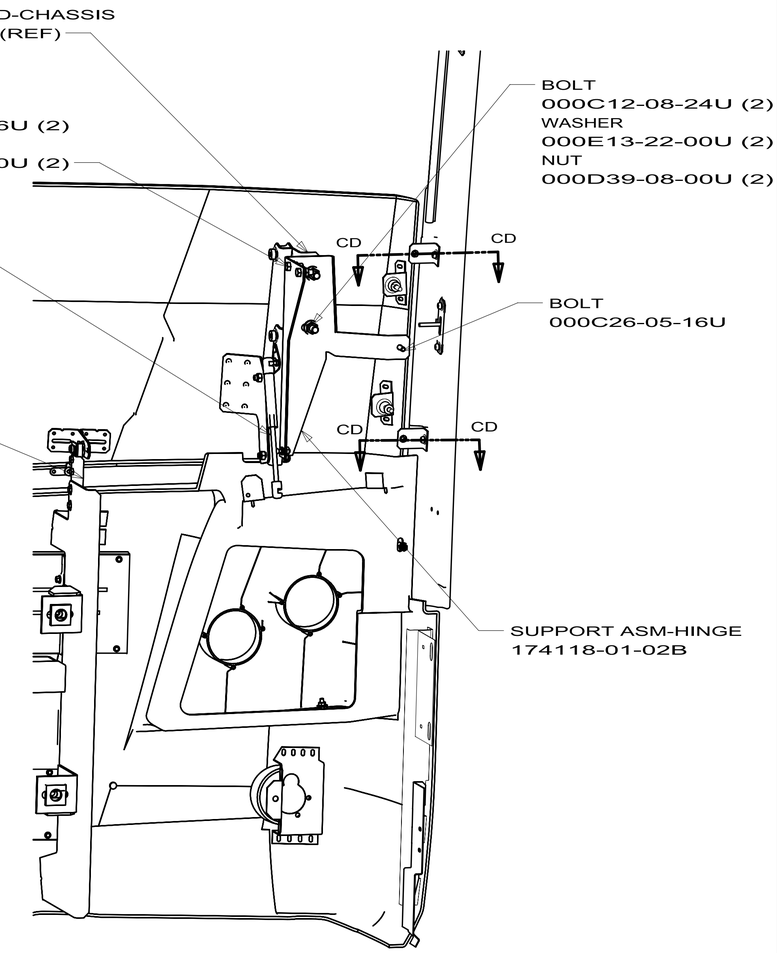

VIEW BB

FIRST USED	10 D-SERIES
	DO NOT SCALE DRAWING
TITLE:	BODY PANEL INSTL-FRONT
SHEET 2	PART NO 172403 REV

3/30/2010

DWG NO 172403

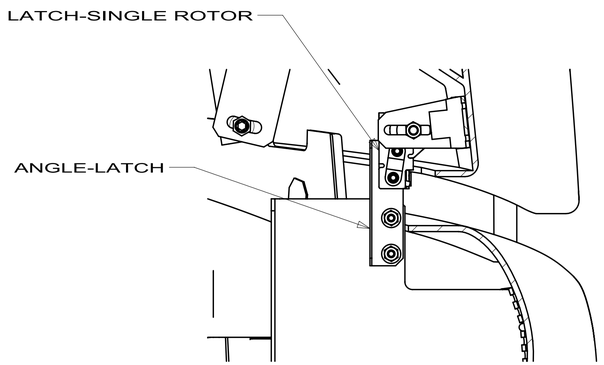

SECTION CA-CA

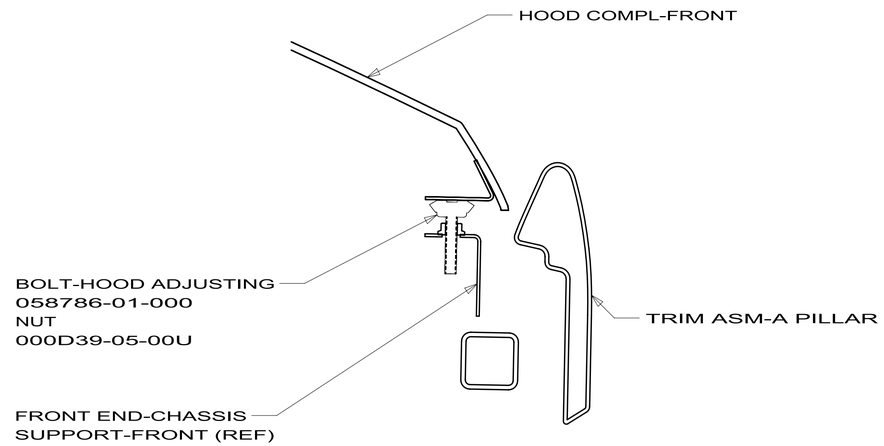

SECTION CB-CB
(4 PLACES)

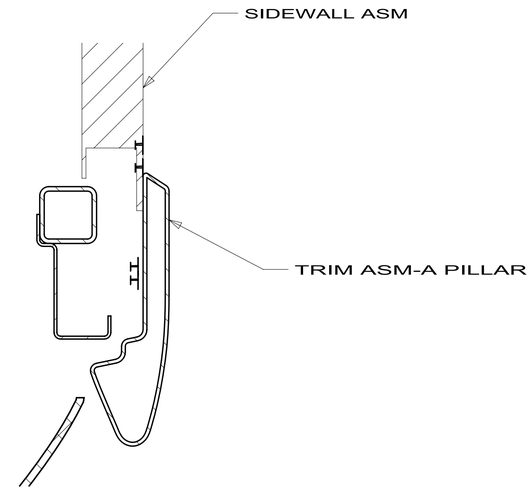

SECTION CC-CC

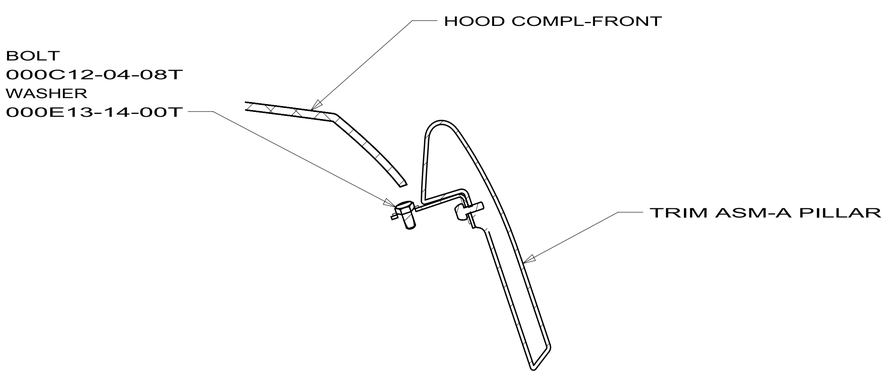

SECTION CD-CD
(BOTH SIDES)

FIRST USED	10 D-SERIES
	DO NOT SCALE DRAWING
TITLE:	BODY PANEL INSTL-FRONT
SHEET 3	PART NO. 172403 REV

3/30/2010

DWG NO 172403

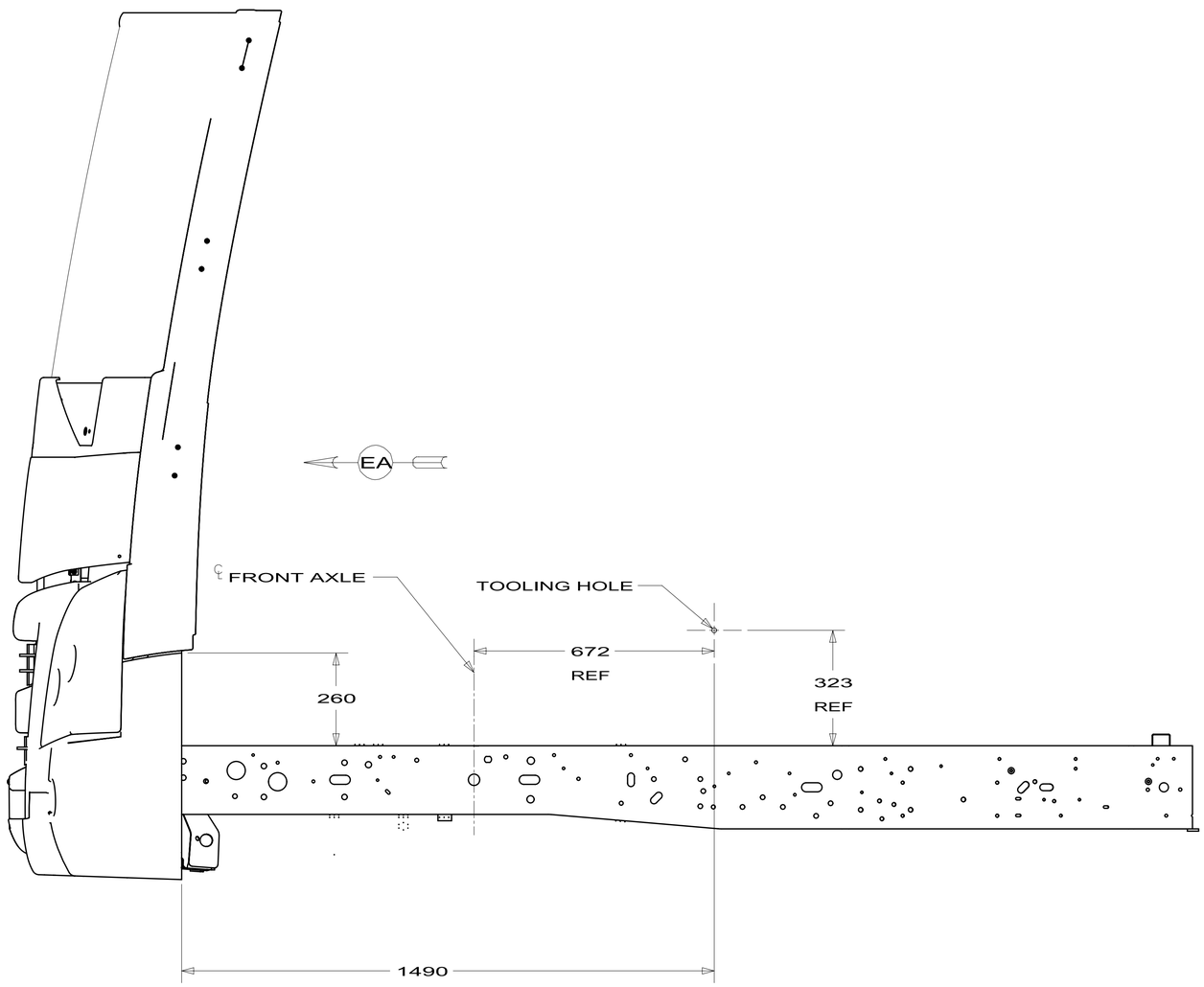

FIRST USED	10 D-SERIES
	DO NOT SCALE DRAWING
TITLE:	BODY PANEL INSTL-FRONT
SHEET 4	PART NO 172403 REV

3/30/2010

DWG NO 172403

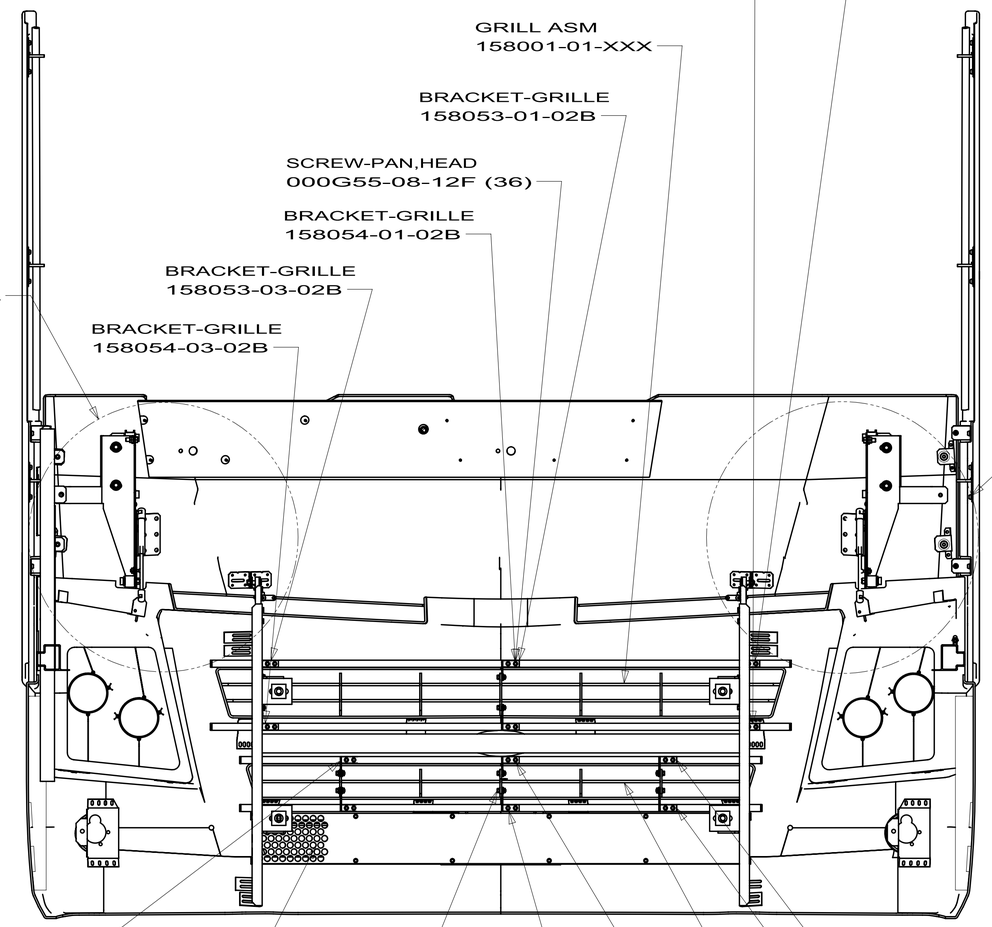

DETAIL EA

WIN

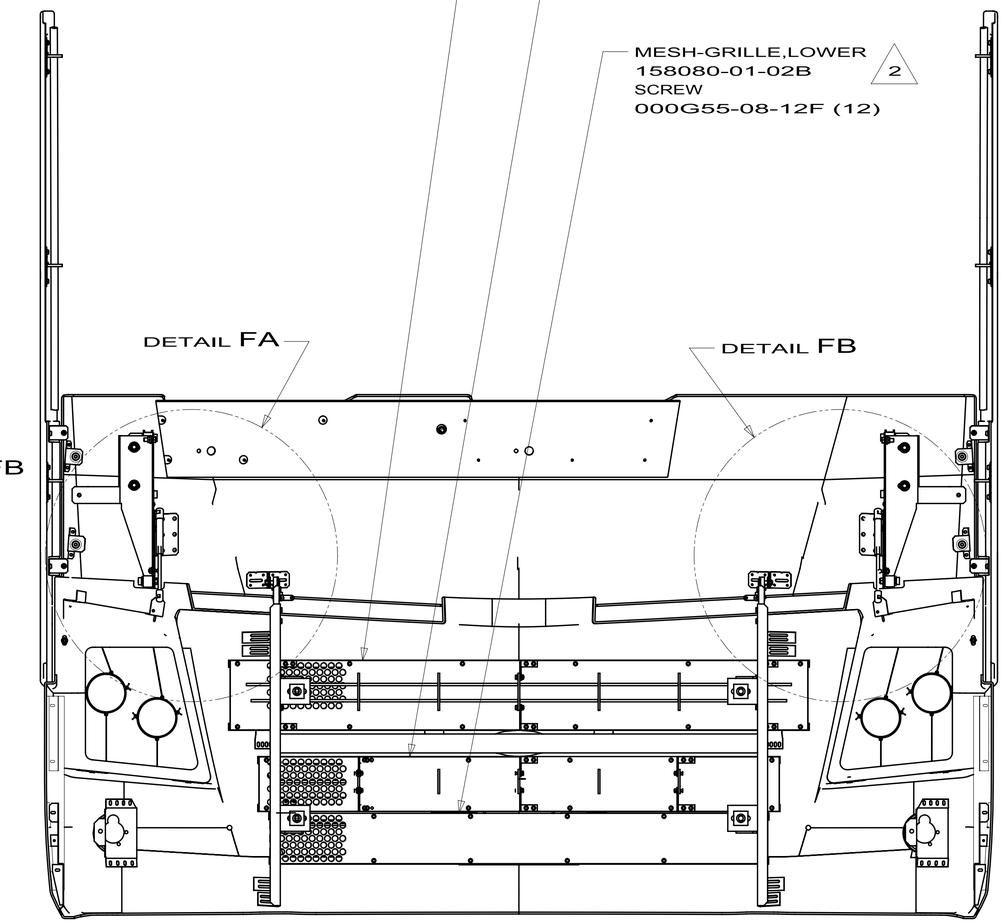

DETAIL EA

ITA

FIRST USED	10 D-SERIES
	DO NOT SCALE DRAWING
TITLE:	BODY PANEL INSTL-FRONT
SHEET 5	PART NO 172403 REV

3/30/2010

DWG NO 172403

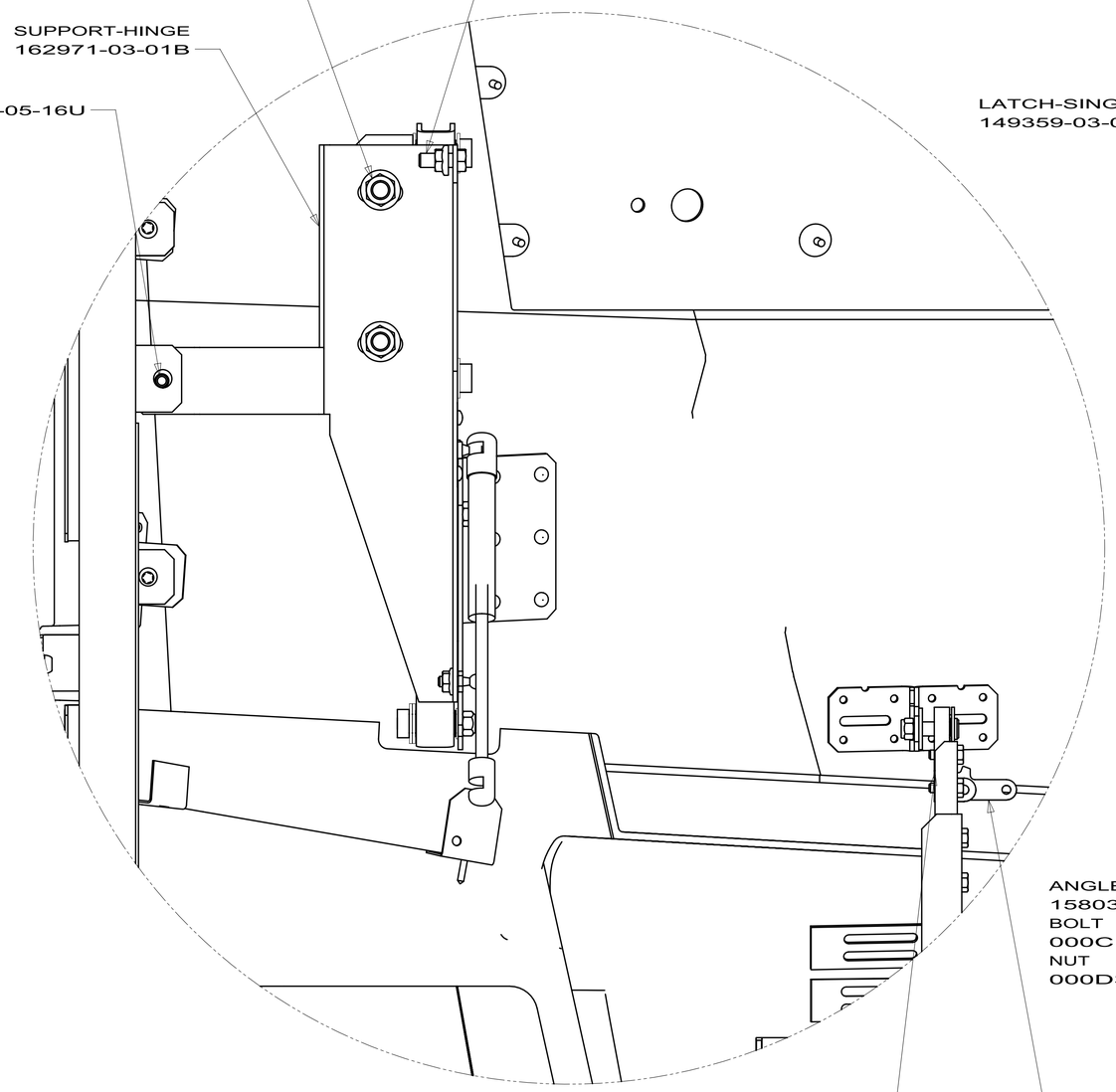

DETAIL FA

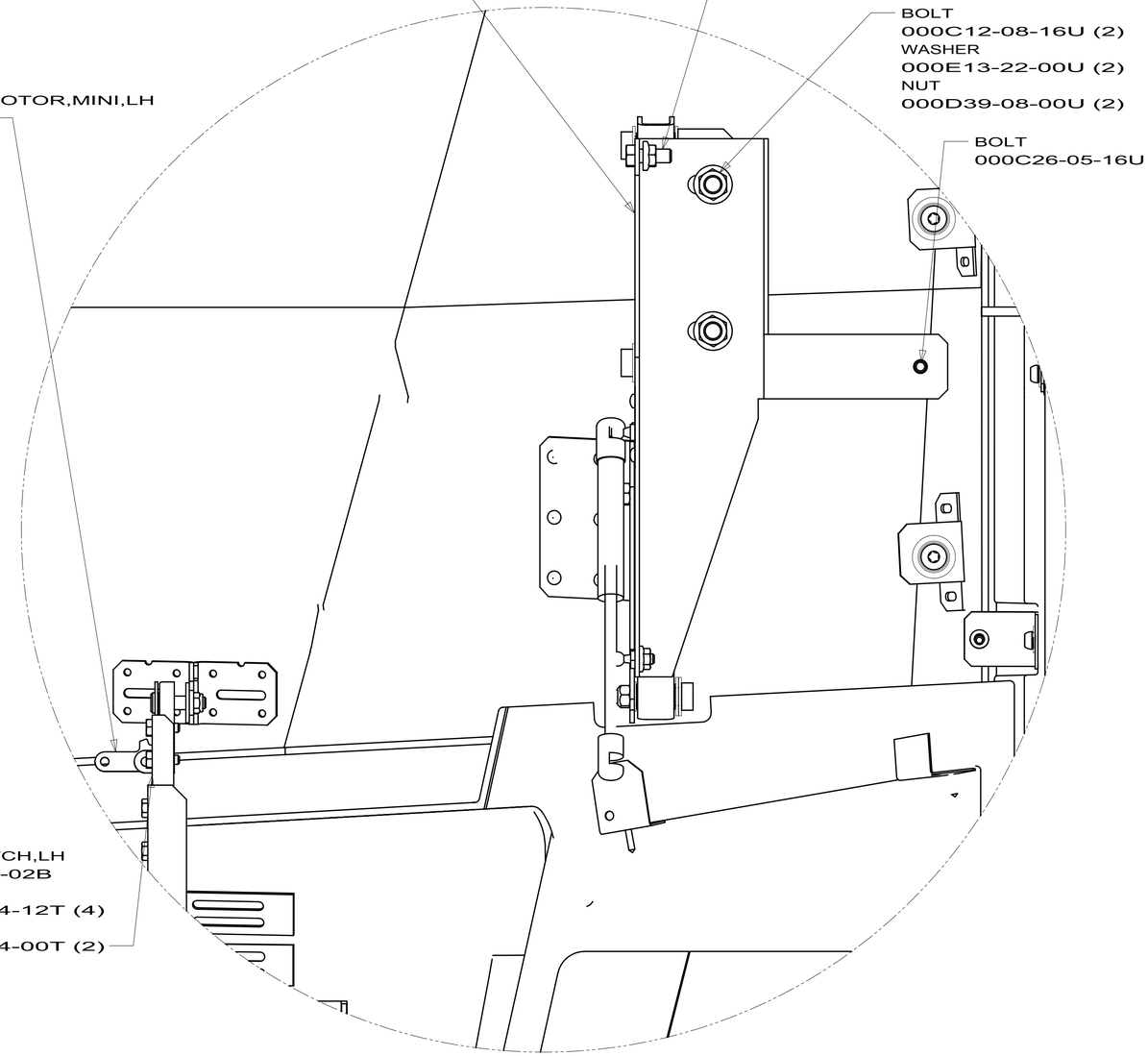

DETAIL FB

FIRST USED	10 D-SERIES
	DO NOT SCALE DRAWING
TITLE:	BODY PANEL INSTL-FRONT
SHEET 6	PART NO 172403 REV

3/30/2010

DWG NO 164369

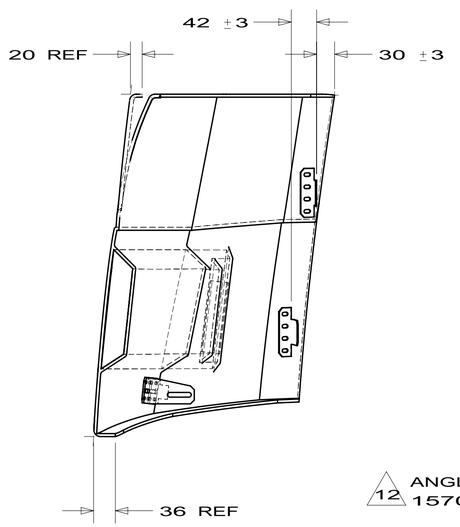

SECTION C-C

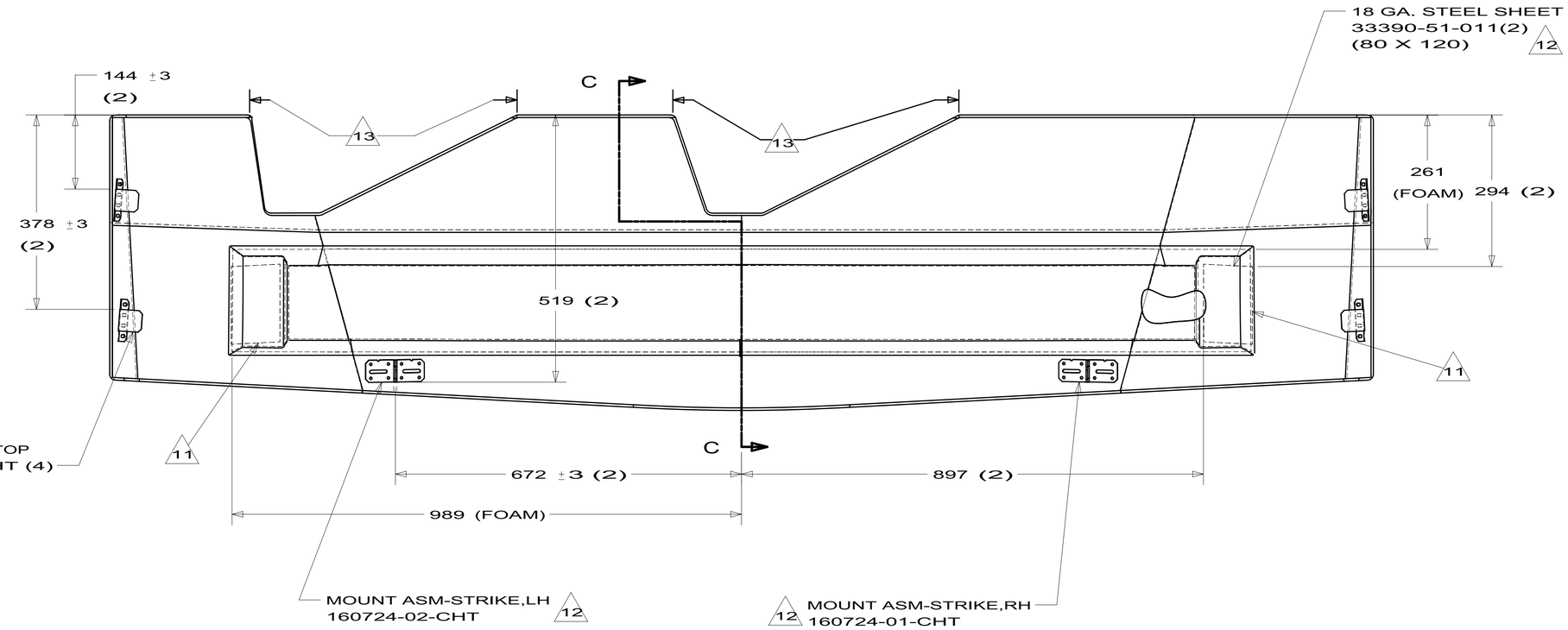

FIRST USED	10 D-SERIES
	DO NOT SCALE DRAWING
TITLE:	PANEL-HOOD,OUTER
SHEET 2	PART NO. 164369 REV

DWG NO 164369

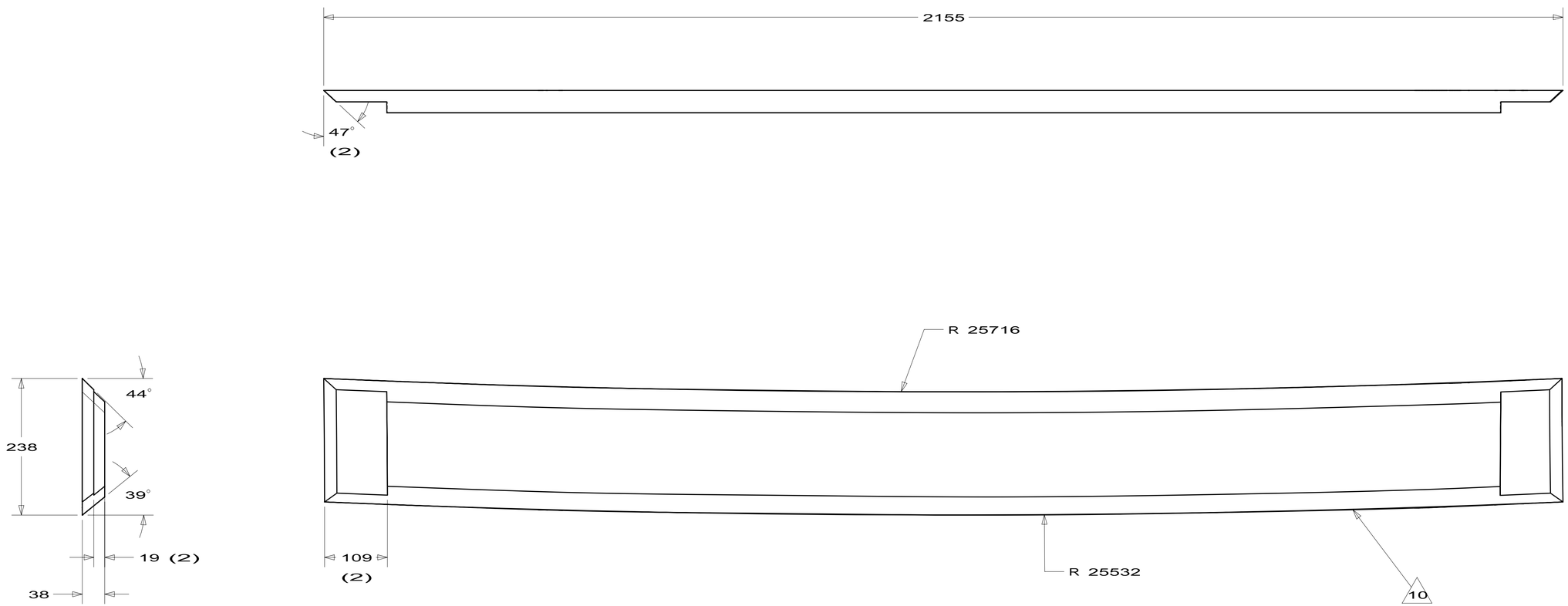

FOAM CUTOUT/FLAT PATTERN

FIRST USED	10 D-SERIES
	DO NOT SCALE DRAWING
TITLE:	PANEL-HOOD,OUTER
SHEET 3	PART NO 164369 REV

RELEASE	REV A	DATE	DWG NO 164372

REV	ZONE	REVISION RECORD	DATE	DFTR-ORIG

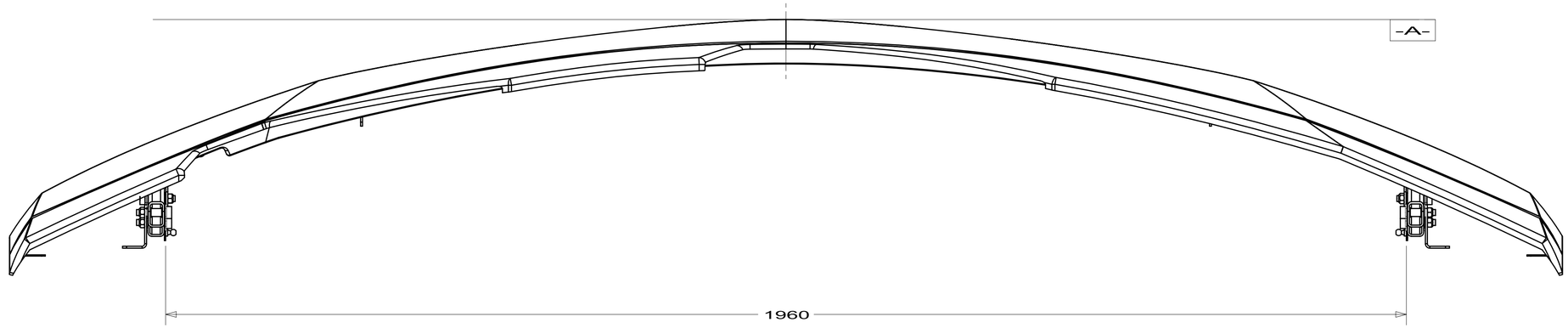

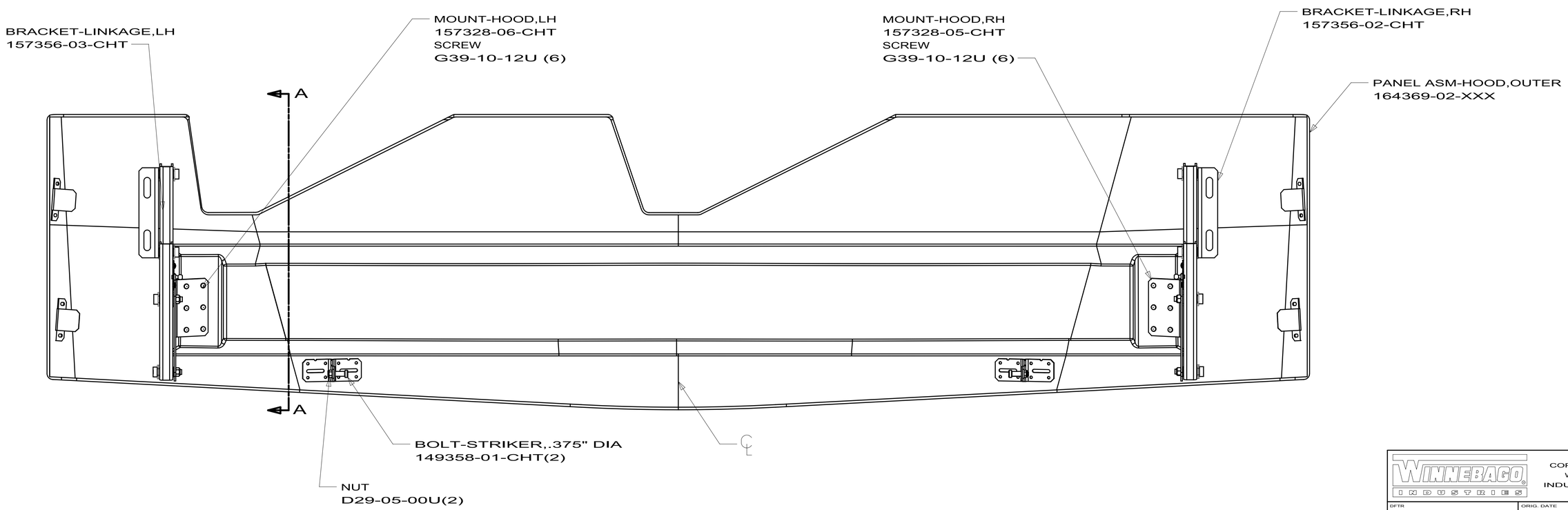

NOTES:

COPYRIGHT 2009
WINNEBAGO
INDUSTRIES, INC.

DFTR	ORIG. DATE
CHKR	ALL DIMENSIONS ARE IN MILLIMETERS
P.E.	
M.E.	FIRST USED
DSNR	10 D-SERIES

UNSPECIFIED TOLERANCES ARE:

WHOLE DIM (X)	:	3
ONE-PLACE (X.X)	:	1.5
TWO-PLACE (X.XX)	:	0.50
ANGLE	:	1°

THIRD ANGLE PROJECTION

MATERIAL:

DO NOT SCALE DRAWING

TITLE:
HOOD COMPL-FRONT

SHEET 1 OF 2 | PART NO 164372 | REV

REF: 1

DWG NO 164372

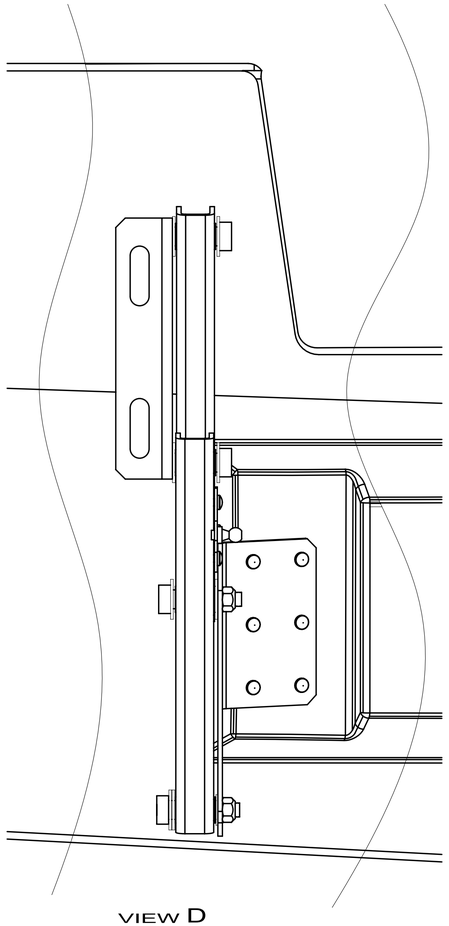

VIEW D

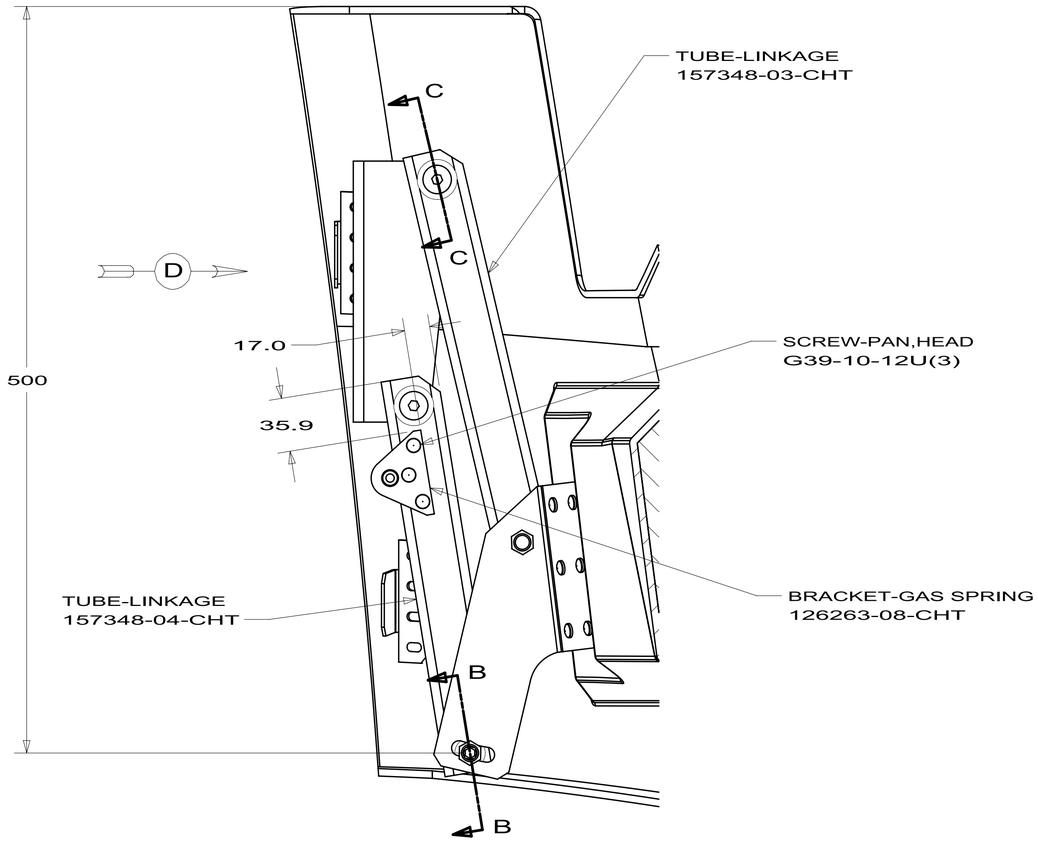

SECTION A-A
(BOTH SIDES)

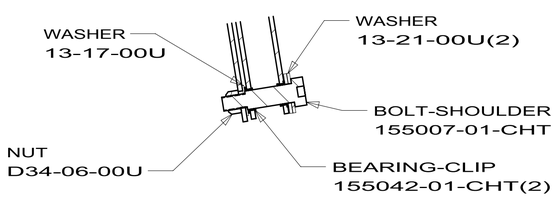

SECTION B-B
(2 PLCS)

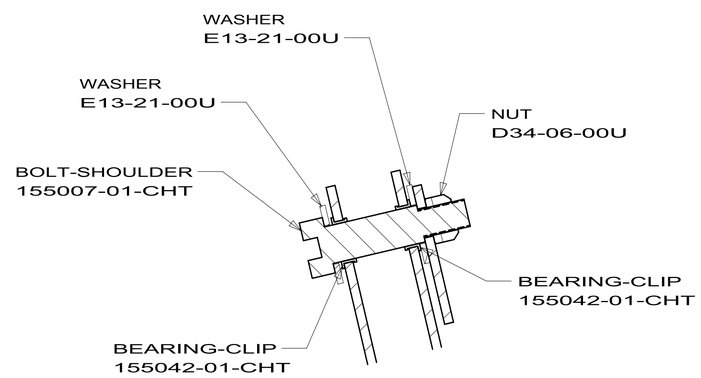

SECTION C-C
(6 PLCS)

FIRST USED	10 D-SERIES
	DO NOT SCALE DRAWING
TITLE:	HOOD COMPL-FRONT
SHEET 2	PART NO 164372 REV

DWG NO	UNIT	SHEET
172170-01	D35J	1,2
172170-02	D33C	1,2
172170-03	D37L	1,2
172170-04	D31E	1,2

RELEASE	REV A	DATE	DWG NO 172170
REV	ZONE	REVISION RECORD	DATE	DFTR-ORIG

KEY	PART NUMBER (26F)	PART NUMBER (26H)	DESCRIPTION
1	124806-01-73A	124806-01-74A	DECAL-ITASCA W/ICON
2	129922-02-01A (16K)(16L) CHASSIS SUPPLIED (1PE)(1PU)(1PR)(1PS)		DECAL-EMBLEM TRITON V10 DECAL-EMBLEM
3	132664-02-01A		DECAL-LOGO DOMED WINNEBAGO
4	144587-02-47A	144587-02-48A	DECAL-ITASCA
5	135452-07-01A		DECAL-SUNOVA, LG
6	135452-08-01A		DECAL-SUNOVA, SML
7	151687-02-01A		DECAL/BEZEL-DOMED NAMEPLATE
8	172181-01-01A	172181-01-02A	DECAL-SWEEP HOOD/BACKWALL
9	172182-01-01A	172182-01-02A	DECAL-SWEEP #1, RH
10	172182-02-01A	172182-02-02A	DECAL-SWEEP #1, LH
11	172183-01-01A	172183-01-02A	DECAL-SWEEP #2, RH
12	172183-02-01A	172183-02-02A	DECAL-SWEEP #2, LH
13	172184-01-01A	172184-01-02A	DECAL-SWEEP #3, RH
14	172184-02-01A	172184-02-02A	DECAL-SWEEP #3, LH
15	172185-01-01A	172185-01-02A	DECAL-SWEEP #4, RH
16	172185-02-01A	172185-02-02A	DECAL-SWEEP #4, LH
17	172380-01-01A		PAINT MASK-UPPER BACKWALL
18	172381-01-01A		PAINT MASK-LOWER BACKWALL
19	172382-01-01A		PAINT MASK-UPPER MID SDWL, RH
20	172382-02-01A		PAINT MASK-UPPER MID SDWL, LH
21	172383-01-01A		PAINT MASK-LOWER REAR SDWL, RH
22	172383-02-01A		PAINT MASK-LOWER REAR SDWL, LH
23	172384-01-01A		PAINT MASK-UPPER REAR SDWL, RH
24	172384-02-01A		PAINT MASK-UPPER REAR SDWL, LH
25	172385-01-01A		PAINT MASK-FRONT SDWL, RH
26	172385-02-01A		PAINT MASK-FRONT SDWL, LH
27	141599-71-000	141599-95-000	PAINT
28	141599-74-000	141599-41-000	PAINT
29	165266-01-01A		PAINT MASK-REFRIG VENT

UP TO 06-03-09

(1PS) WORKHORSE 22,000#-22.5 TIRE
(1PR) WORKHORSE 22,000#-19.5 TIRE
(1PU) WKHRSE 22K 230HP DSL 22.5TIR
(1PE) WORKHORSE 20,500 DSL 230HP
(16L) FORD 22,000#-22.5 AL WHL
(16K) FORD CHASSIS 22,000
(26H) EXT GRAPHIC/PAINT-DLX PKG 2
(26F) EXT GRAPHIC/PAINT DLX PKG 1

NOTES:

7. PARTS BELOW FEATURE LINE WILL BE COLORED PRIOR TO ASSEMBLY. METALLIC GOLD (26F) AND FORD SILVER MET (26H).

6. CENTER ON SURFACE.

5. VINYL DECAL WILL BE APPLIED WHERE EVER GRAPHIC DESIGN PATTERN IS POSITIONED OVER SLIDEROOM EXTRUSION, BUT WILL NOT BE APPLIED TO VINYL SCREW COVER INSERT.

4. ALL LOGOS ARE TO BE +/- 1mm ON A HORIZONTAL PLANE (END TO END).

3. CLEAR COAT 141599-27-000 TO BE APPLIED ON ALL PAINTED AREAS.

2. APPLY FILM-URETHANE PROTECTANT 109506-01-000 AT BOTTOM OF ENTRANCE DOOR TO PREVENT SCUFFMARKS.

1. APPLY PROTECTOR 116424-01-000 TO WATER HEATER DOOR LATCH.

SEE CHART
FOR COLOR VARIATIONS OF THIS PART

COPYRIGHT 2009
WINNEBAGO
INDUSTRIES, INC.

WINNEBAGO INDUSTRIES

DFTR	ORIG. DATE
CHKR	ALL DIMENSIONS ARE IN MILLIMETERS
P.E.	
M.E.	FIRST USED 10 D-SER (SUNOVA)
DSNR	

UNSPECIFIED TOLERANCES ARE:
WHOLE DIM (X) : 3
ONE-PLACE (X.X) : 1.5
TWO-PLACE (X.XX) : 0.50
ANGLE : 1°

MATERIAL:

THIRD ANGLE PROJECTION

DO NOT SCALE DRAWING

TITLE: GRAPHICS INSTALLATION

SHEET 1 OF 2 | PART NO 172170 | REV

REF:

1 6/15/2009

DWG NO	UNIT	SHEET
172170-01	D35J	1,2
172170-02	D33C	1,3
172170-03	D37L	1,4
172170-04	D31E	1,5

KEY	PART NUMBER (26F)	PART NUMBER (26H)	DESCRIPTION
1	124806-01-73A	124806-01-74A	DECAL-ITASCA W/ICON
2	129922-02-01A (16K)(16L) CHASSIS SUPPLIED (1PE)(1PU)(1PR)(1PS)		DECAL-EMBLEM TRITON V10 DECAL-EMBLEM
3	132664-02-01A		DECAL-LOGO DOMED WINNEBAGO
4	144587-02-47A	144587-02-48A	DECAL-ITASCA
5	135452-07-01A		DECAL-SUNOVA, LG
6	135452-08-01A		DECAL-SUNOVA, SML
7	151687-02-01A		DECAL/BEZEL-DOMED NAMEPLATE
8	172181-01-01A	172181-01-02A	DECAL-SWEEP HOOD/BACKWALL
9	172182-01-01A	172182-01-02A	DECAL-SWEEP #1, RH
10	172182-02-01A	172182-02-02A	DECAL-SWEEP #1, LH
11	172183-01-01A	172183-01-02A	DECAL-SWEEP #2, RH
12	172183-02-01A	172183-02-02A	DECAL-SWEEP #2, LH
13	172184-01-01A	172184-01-02A	DECAL-SWEEP #3, RH
14	172184-02-01A	172184-02-02A	DECAL-SWEEP #3, LH
15	172185-01-01A	172185-01-02A	DECAL-SWEEP #4, RH
16	172185-02-01A	172185-02-02A	DECAL-SWEEP #4, LH
17	172380-01-01A		PAINT MASK-UPPER BACKWALL
18	172381-01-01A		PAINT MASK-LOWER BACKWALL
19	172382-01-01A		PAINT MASK-UPPER MID SDWL, RH
20	172382-02-01A		PAINT MASK-UPPER MID SDWL, LH
21	172383-01-01A		PAINT MASK-LOWER REAR SDWL, RH
22	172383-02-01A		PAINT MASK-LOWER REAR SDWL, LH
23	172384-01-01A		PAINT MASK-UPPER REAR SDWL, RH
24	172384-02-01A		PAINT MASK-UPPER REAR SDWL, LH
25	172385-01-01A		PAINT MASK-FRONT SDWL, RH
26	172385-02-01A		PAINT MASK-FRONT SDWL, LH
27	141599-B5-000	141599-95-000	PAINT
28	141599-74-000	141599-41-000	PAINT
29	165266-01-01A		PAINT MASK-REFRIG VENT

(AFTER 06-04-09)

- 1PS WORKHORSE 22,000#-22.5 TIRE
- 1PR WORKHORSE 22,000#-19.5 TIRE
- 1PU WKHRSE 22K 230HP DSL 22.5TIR
- 1PE WORKHORSE 20,500 DSL 230HP
- 16L FORD 22,000#-22.5 AL WHL
- 16K FORD CHASSIS 22,000
- 26H EXT GRAPHIC/PAINT-DLX PKG 2
- 26F EXT GRAPHIC/PAINT DLX PKG 1

NOTES:

7 PARTS BELOW FEATURE LINE WILL BE COLORED PRIOR TO ASSEMBLY. METALLIC GOLD (26F) AND FORD SILVER MET (26H).

6 CENTER ON SURFACE.

5. VINYL DECAL WILL BE APPLIED WHERE EVER GRAPHIC DESIGN PATTERN IS POSITIONED OVER SLIDEROOM EXTRUSION, BUT WILL NOT BE APPLIED TO VINYL SCREW COVER INSERT.

4. ALL LOGOS ARE TO BE +/- 1mm ON A HORIZONTAL PLANE (END TO END).

3. CLEAR COAT 141599-27-000 TO BE APPLIED ON ALL PAINTED AREAS.

2. APPLY FILM-URETHANE PROTECTANT 109506-01-000 AT BOTTOM OF ENTRANCE DOOR TO PREVENT SCUFFMARKS.

1. APPLY PROTECTOR 116424-01-000 TO WATER HEATER DOOR LATCH.

10 D-SER
(SUNOVA)

3
1.5
0.50
1°

SEE CHART
FOR COLOR VARIATIONS
OF THIS PART

GRAPHICS INSTALLATION
1 5 172170

11/12/2009

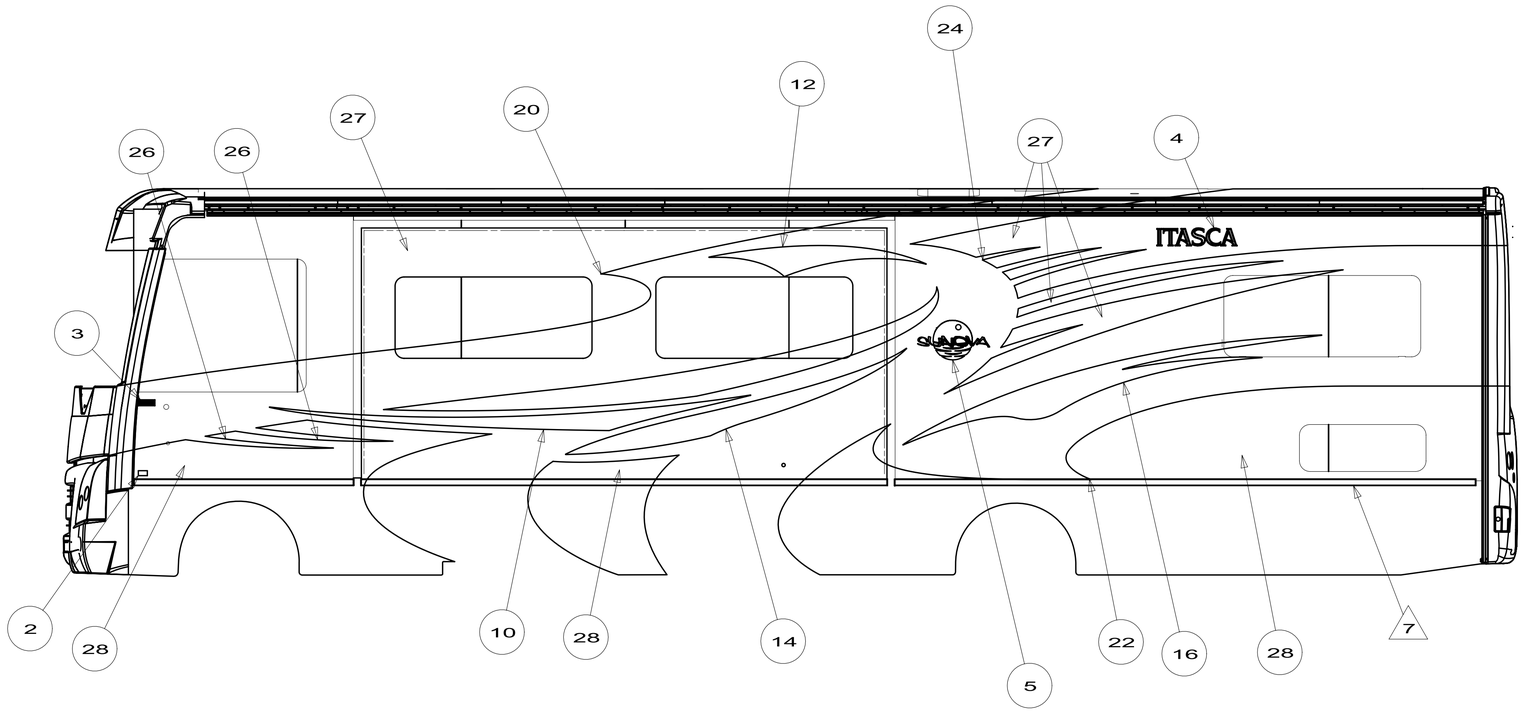

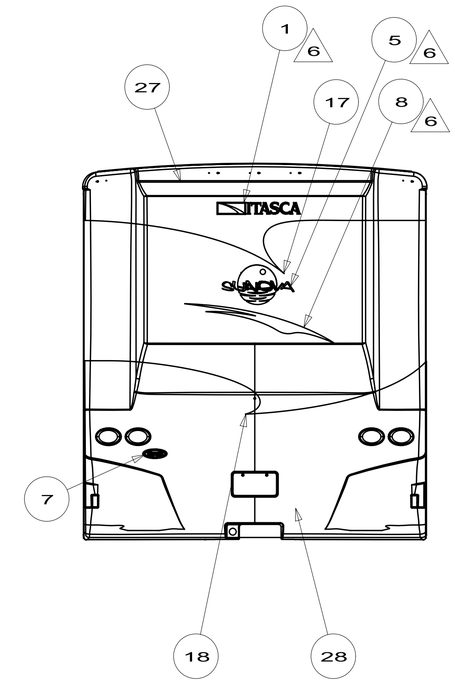

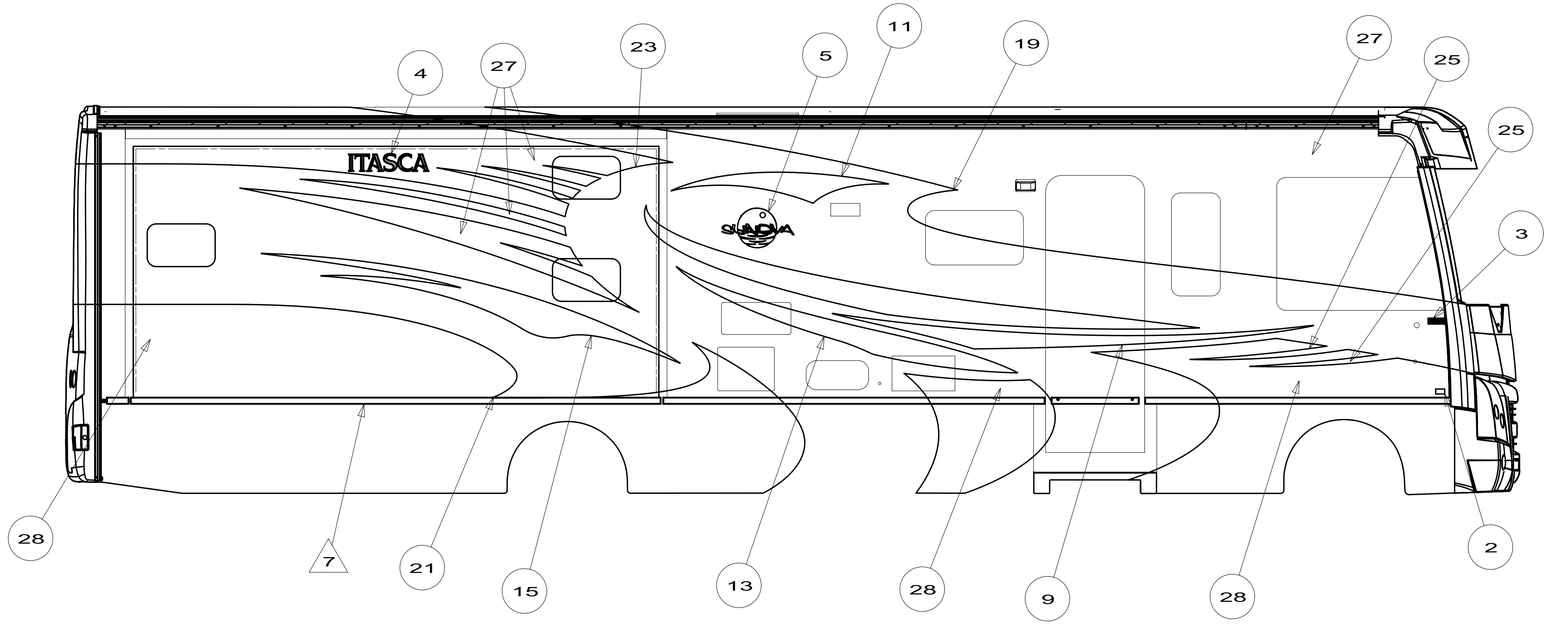

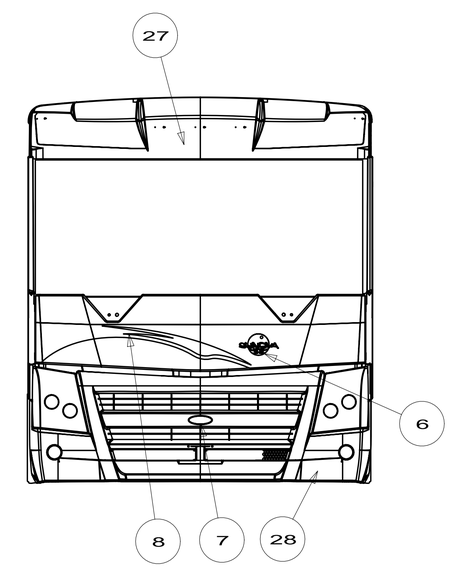

10 D35J (SUNOVA)

GRAPHICS INSTALLATION

2 172170

11/12/2009

DWG NO	UNIT	A	B	C	D
172359-01	D35J	1160	1150	3000	3160
172359-02	D33C	.	.	.	.
172359-03	D37L	.	.	.	.
172359-04	D31E	.	.	.	.

RELEASE	REV	DATE	DWG NO
	A	12--30--08	172359

REV	ZONE	REVISION RECORD	DATE	DFTR-ORIG

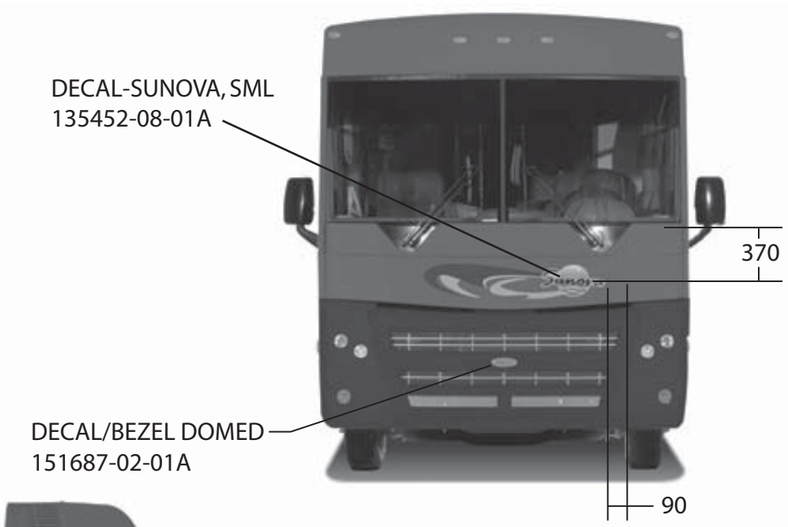

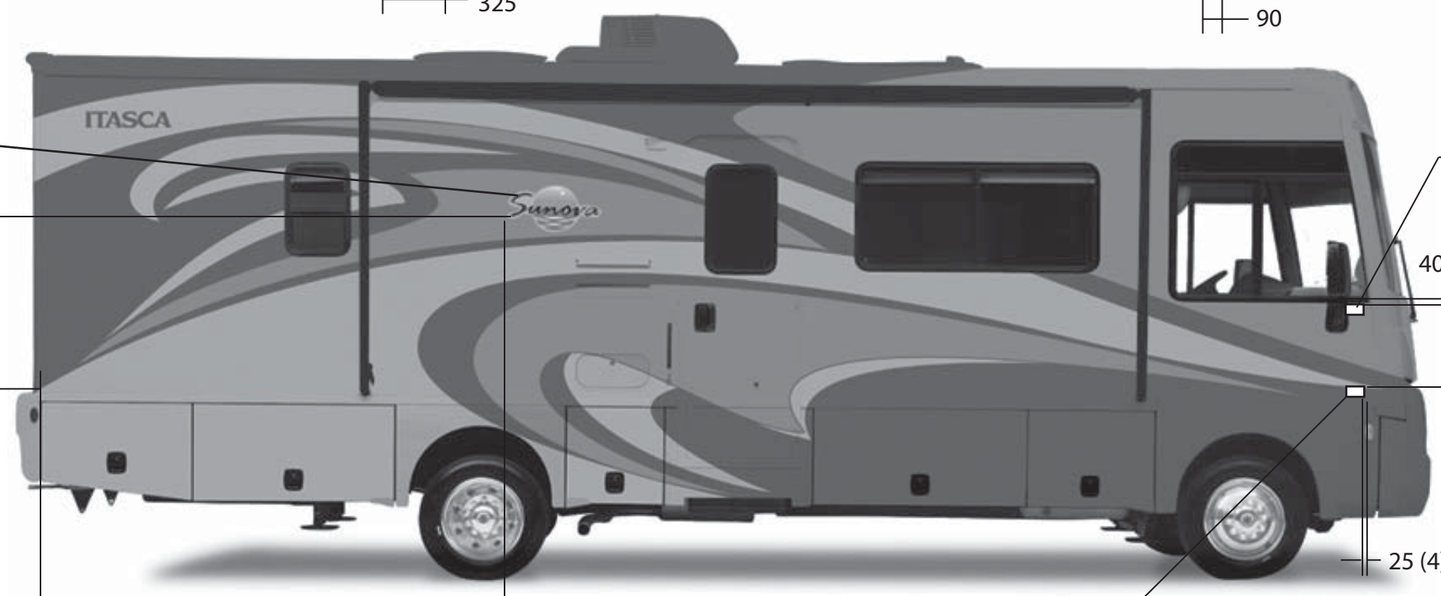

(24P) MASK FRT END PROTECTIVE
(1PU) WKHRSE 22K 230HP DSL 22.5TIR
(1PS) WORKHORSE 22,000#-22.5 TIRE
(1PE) WORKHORSE 20,500 DSL 230HP
(1PR) WORKHORSE 22,000#-19.5 TIRE
(16L) FORD 22,000#-22.5 AL WH
(16K) FORD CHASSIS 22,000
(27A) EXT FULL BODY PAINT PKG #1
(92A) EXT FULL BODY PAINT PKG #2
(24C) EXT FULL BODY PAINT PKG #3
(24B) EXT FULL BODY PAINT PKG #4

NOTES:

6. APPLY SEALER BODY SEAM CLEAR 94401-04-000 TO HELP SECURE EDGES.

5. USE 174664-01-000 (100 FT) TO COVER UNSEALED ROOF SEAMS.

4. CLEAR COAT TO BE APPLIED ON ENTIRE UNIT TO PROTECT PAINT.

3. TOLERANCE FOR DIMENSIONS IS +/-20mm.
LOGO IS TO BE +/- 1mm ON A HORIZONTAL PLANE (END TO END).

2. APPLY FILM-URETHANE PROTECTANT 109506-01-000 AT BOTTOM OF ENTRANCE DOOR TO PREVENT SCUFFMARKS.

1. APPLY PROTECTOR 116424-01-000 TO WATER HEATER DOOR LATCH.

10. BLACK PLASTIC ABS WINDSHIELD WIPER PANEL IS TO BE PAINTED THE CORRESPONDING COLOR IN THE PAINT SCHEME.

9. DIE CUT ACRYLIC FILM TO PROTECT UNIT (KIT-PAINT PROTECTION 167522-01-000)

8. PASSENGER SIDE OF UNIT SHOWN, DRIVER'S SIDE OPPOSITE.

7. END PANELS OF SLIDEOUT ROOMS WILL BE PAINTED WITH BASECOAT AND CLEAR COAT ONLY. THERE WILL BE NO COLORED DESIGN GRAPHIC ELEMENTS PAINTED ON THE END PANELS.

WINNEBAGO INDUSTRIES

COPYRIGHT 2009
WINNEBAGO
INDUSTRIES, INC.

ORIG. DATE 12/18/08
FIRST USED 10 D SERIES SUNOVA
MATERIAL: .

SPECIFICATION PRINT
DO NOT SCALE

TITLE: GRAPHICS INSTL - FBP

SHEET 1 OF 2 | PART NO 172359 | REV

REF 1 08/26/09

DWG NO 172359

(27A)

GRAPHICS INST - 2010 SUNOVA F.B.P.
SEDONA

(92A)

GRAPHICS INST - 2010 SUNOVA F.B.P.
SILVER CLOUD

(24C)

GRAPHICS INST - 2010 SUNOVA F.B.P.
PEWTER

(24B)

GRAPHICS INST - 2010 SUNOVA F.B.P.
SILVER PLUM

FIRST USED
2010 D-SERIES (SUNOVA)

SPECIFICATION PRINT
DO NOT SCALE

TITLE:
GRAPHICS INSTL - FBP

SHEET	PART NO	REV
2	172359	

RELEASE	REV A	DATE	DWG NO 172169

REV	ZONE	REVISION RECORD	DATE	DFTR-ORIG

KEY	PART NUMBER (26F)	PART NUMBER (26H)	DESCRIPTION
1	120702-03-33A		DECAL-LOGO WINNEBAGO
2	129922-02-01A (16K)(16L) CHASSIS SUPPLIED (1PR)(1PE)(1PS)(1PU)		DECAL-EMBLEM TRITON V10 DECAL-EMBLEM
3	132664-02-01A		DECAL-LOGO DOMED WINNEBAGO
4	135381-02-16A	135381-02-07A	DECAL-W
5	135453-03-07A		DECAL-SIGHTSEER LG
6	135453-04-07A		DECAL-SIGHTSEER SML
7	151687-01-01A		DECAL/BEZEL-DOMED NAMEPLATE
8	172137-01-01A	172137-01-02A	DECAL-HOOD SLASH
9	172138-01-01A	172138-01-02A	DECAL-HOOK, FRT #1, RH
10	172138-02-01A	172138-02-02A	DECAL-HOOK, FRT #1, LH
11	172139-01-01A	172139-01-02A	DECAL-HOOK, FRT #2, RH
12	172139-02-01A	172139-02-02A	DECAL-HOOK, FRT #2, LH
13	172141-01-01A	172141-01-02A	DECAL-SLASH, FRT, RH
14	172141-02-01A	172141-02-02A	DECAL-SLASH, FRT, LH
15	172142-01-01A	172142-01-02A	DECAL-SLASH, MID, RH
16	172142-02-01A	172142-02-02A	DECAL-SLASH, MID, LH
17	172143-01-01A	172143-01-02A	DECAL-HOOK, RR #1, RH
18	172143-02-01A	172143-02-02A	DECAL-HOOK, RR #1, LH
19	172144-01-01A	172144-01-02A	DECAL-HOOK, RR #2, RH
20	172144-02-01A	172144-02-02A	DECAL-HOOK, RR #2, LH
21	172145-01-01A	172145-01-02A	DECAL-SLASH, RR, RH
22	172145-02-01A	172145-02-02A	DECAL-SLASH, RR, LH
23	172146-01-01A	172146-01-02A	DECAL-BACKWALL
24	172375-01-01A		PAINT MASK-UPPER FRONT SIDEWALL, RH
25	172375-02-01A		PAINT MASK-UPPER FRONT SIDEWALL, LH
26	172376-01-01A		PAINT MASK-LOWER FRONT SDWL, RH
27	172376-02-01A		PAINT MASK-LOWER FRONT SDWL, LH
28	172377-01-01A		PAINT MASK-LOWER MID SDWL, RH
29	172377-02-01A		PAINT MASK-LOWER MID SDWL, LH
30	172378-01-01A		PAINT MASK-UPPER REAR SIDEWALL, RH
31	172378-02-01A		PAINT MASK-UPPER REAR SIDEWALL, LH
32	141599-70-000	141599-72-000	PAINT
33	141599-41-000	141599-68-000	PAINT
34	172374-01-01A		PAINT MASK-LOWER BACKWALL
35	165266-01-01A		PAINT MASK-REFRIG VENT
36	174807-01-01A		PAINT MASK-UPPER BACKWALL

141599-A3-000 (UP TO 08-09-09)
(AFTER 08-10-09)

(1PU) WKHRSE 22K 230HP DSL 22.5TIR
(1PS) WORKHORSE 22,000#-22.5 TIRE
(1PE) WORKHORSE 20,500 DSL 230HP
(1PR) WORKHORSE 22,000#-19.5 TIRE
(16L) FORD 22,000#-22.5 AL WHL
(16K) FORD CHASSIS 22,000
(26H) EXT GRAPHIC/PAINT-DLX PKG 2
(26F) EXT GRAPHIC/PAINT DLX PKG 1

7 PARTS BELOW FEATURE LINE WILL BE COLORED PRIOR TO ASSEMBLY.
FORD SILVER MET (26F) AND SANDSTONE BEIGE MET (26H)

6 CENTER ON SURFACE.

5. VINYL DECAL WILL BE APPLIED WHERE EVER GRAPHIC DESIGN PATTERN IS POSITIONED OVER SLIDEROOM EXTRUSION, BUT WILL NOT BE APPLIED TO VINYL SCREW COVER INSERT.

4. ALL LOGOS ARE TO BE +/- 1mm ON A HORIZONTAL PLANE (END TO END).

3. CLEAR COAT 141599-C2-000 TO BE APPLIED ON ALL PAINTED AREAS.

2. APPLY FILM-URETHANE PROTECTANT 109506-01-000 AT BOTTOM OF ENTRANCE DOOR TO PREVENT SCUFFMARKS.

1. APPLY PROTECTOR 116424-01-000 TO WATER HEATER DOOR LATCH.

NOTES:

SEE CHART
FOR COLOR VARIATIONS OF THIS PART

COPYRIGHT 2009
WINNEBAGO
INDUSTRIES, INC.

DFTR	ORIG. DATE
CHKR	ALL DIMENSIONS ARE IN MILLIMETERS
P.E.	
M.E.	FIRST USED 10 D-SER (SIGHTSEER)
DSNR	

UNSPECIFIED TOLERANCES ARE:
WHOLE DIM (X) : 20
ONE-PLACE (X.X) : 10
TWO-PLACE (X.XX) : .
ANGLE : .

MATERIAL:

THIRD ANGLE PROJECTION

DO NOT SCALE DRAWING

TITLE: GRAPHICS INSTALLATION

SHEET 1 OF 2 | PART NO 172169 | REV

REF:

DWG NO 172169

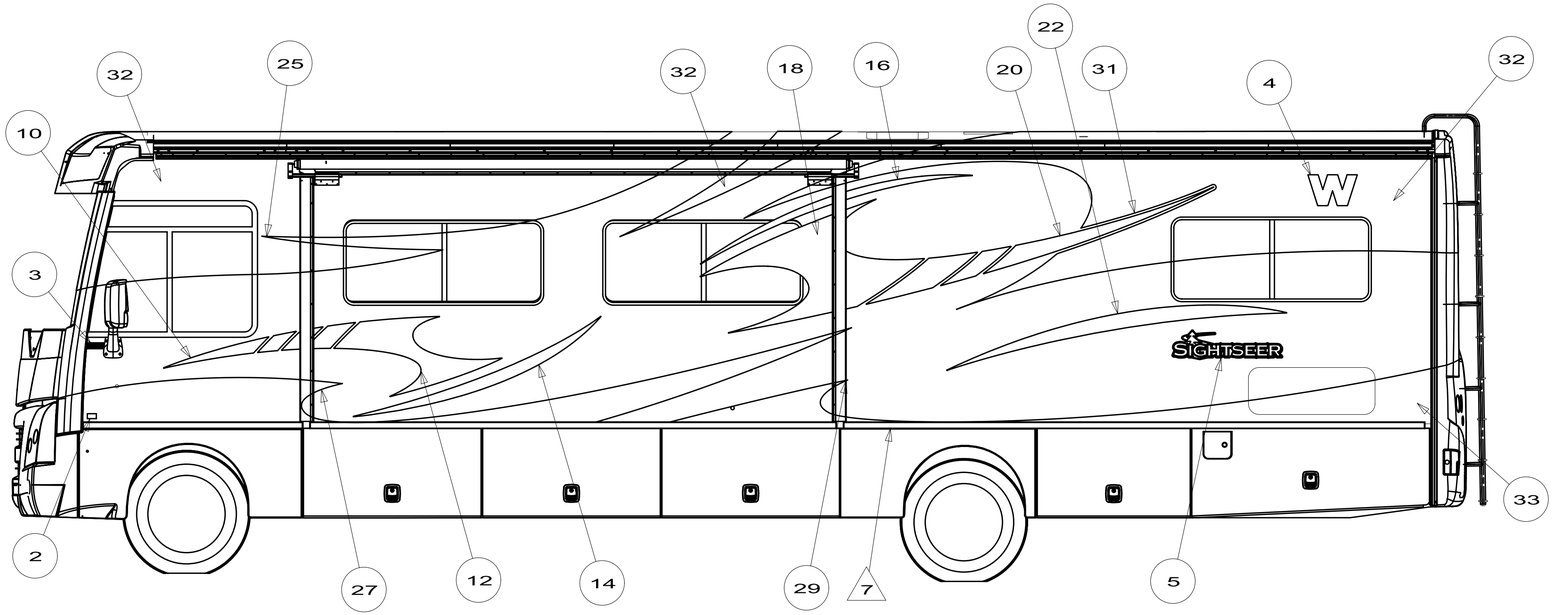

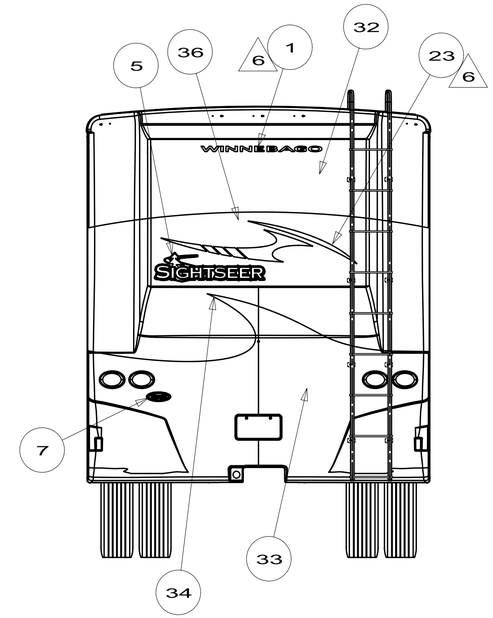

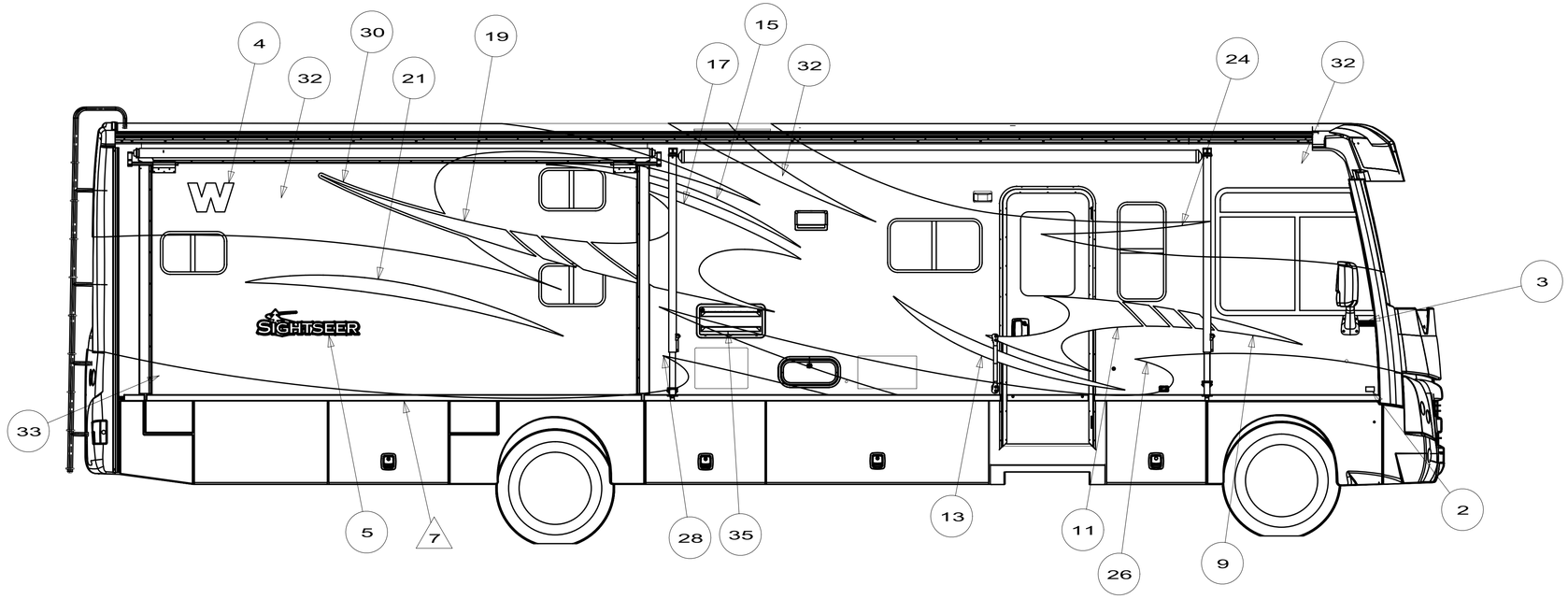

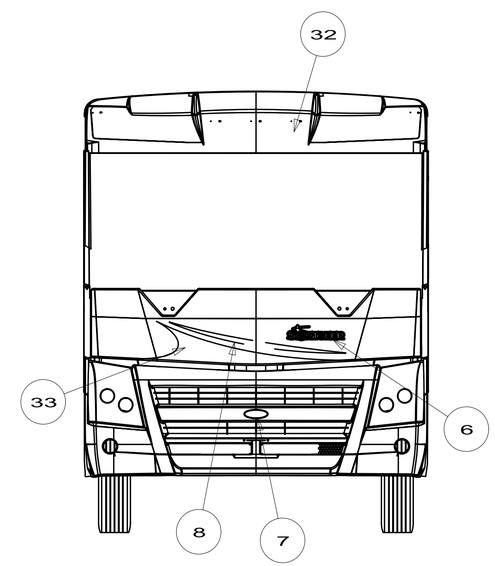

FIRST USED	10 D35J (SIGHTSEER)
	DO NOT SCALE DRAWING
TITLE:	GRAPHICS INSTALLATION
SHEET 2	PART NO 172169 REV

DWG NO	UNIT	A	B	C	D
172358-01	D35J	.	.	.	.
172358-02	D33C	.	.	.	.
172358-03	D37L	1020	1070	2280	2300
172358-04	D31E	.	.	.	.

RELEASE	REV A	DATE 12--22--08	DWG NO 172358

REV	ZONE	REVISION RECORD	DATE	DFTR-ORIG

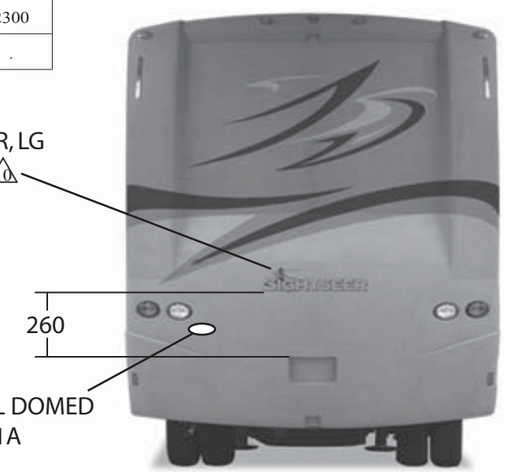

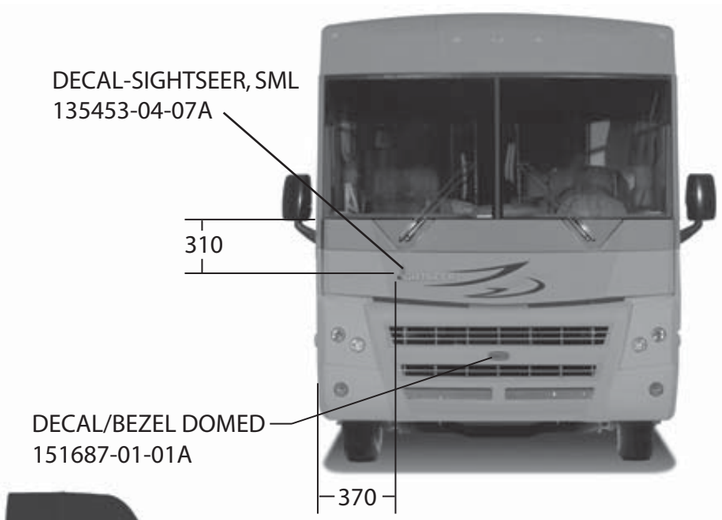

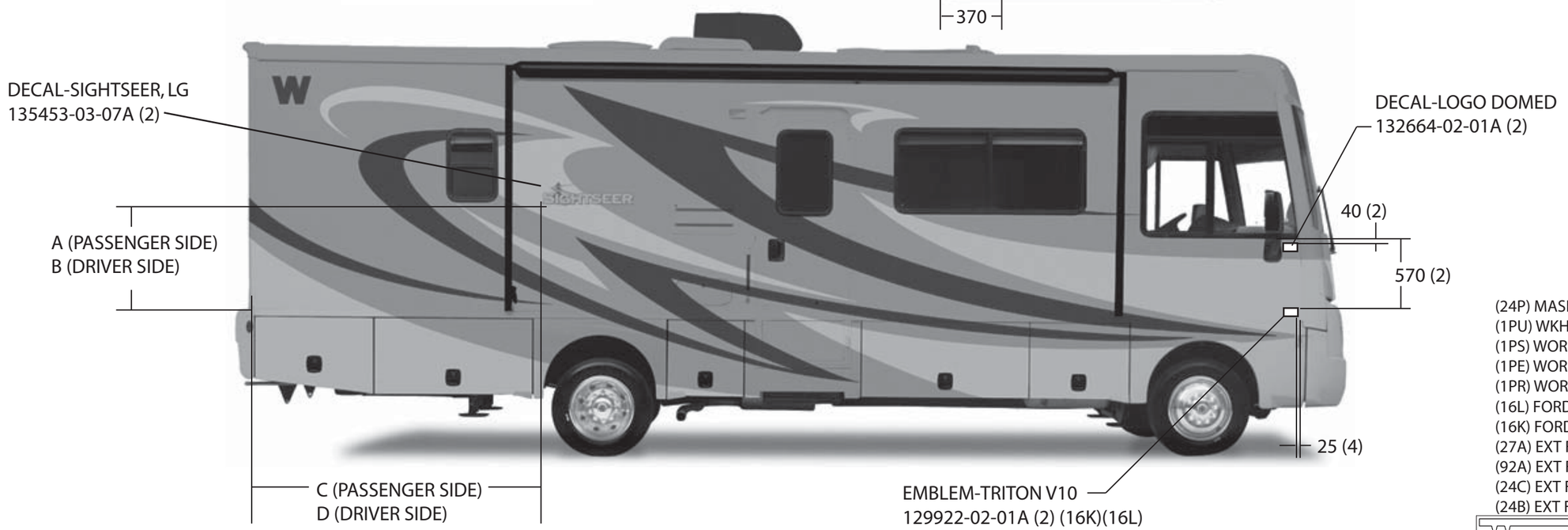

(24P) MASK FRT EXT PROTECTIVE
(1PU) WKHRSE 22K 230HP DSL 22.5TIR
(1PS) WORKHORSE 22,000#-22.5 TIRE
(1PE) WORKHORSE 20,500 DSL 230HP
(1PR) WORKHORSE 22,000#-19.5 TIRE
(16L) FORD 22,000#-22.5 AL WH
(16K) FORD CHASSIS 22,000
(27A) EXT FULL BODY PAINT PKG #1
(92A) EXT FULL BODY PAINT PKG #2
(24C) EXT FULL BODY PAINT PKG #3
(24B) EXT FULL BODY PAINT PKG #4

NOTES:

6. APPLY SEALER BODY SEAM CLEAR 94401-04-000 TO HELP SECURE EDGES.

5. USE 174664-01-000 (100 FT) TO COVER UNSEALED ROOF SEAMS.

4. CLEAR COAT TO BE APPLIED ON ENTIRE UNIT TO PROTECT PAINT.

3. TOLERANCE FOR DIMENSIONS IS +/-20mm.
LOGO IS TO BE +/- 1mm ON A HORIZONTAL PLANE (END TO END).

2. APPLY FILM-URETHANE PROTECTANT 109506-01-000 AT BOTTOM OF ENTRANCE DOOR TO PREVENT SCUFFMARKS.

1. APPLY PROTECTOR 116424-01-000 TO WATER HEATER DOOR LATCH.

11. BLACK PLASTIC ABS WINDSHIELD WIPER PANEL IS TO BE PAINTED THE CORRESPONDING COLOR IN THE PAINT SCHEME.

10 CENTER ON UNIT.

9. DIE CUT ACRYLIC FILM TO PROTECT UNIT (KIT-PAINT PROTECTION 167522-01-000)

8. PASSENGER SIDE OF UNIT SHOWN, DRIVER'S SIDE OPPOSITE.

7. END PANELS OF SLIDEOUT ROOMS WILL BE PAINTED WITH BASECOAT AND CLEAR COAT ONLY. THERE WILL BE NO COLORED DESIGN GRAPHIC ELEMENTS PAINTED ON THE END PANELS.

WINNEBAGO INDUSTRIES

COPYRIGHT 2009
WINNEBAGO
INDUSTRIES, INC.

ORIG DATE 12/18/08
FIRST USED 10 D SERIES SIGHTSEER
MATERIAL: .

SPECIFICATION PRINT
DO NOT SCALE

TITLE: GRAPHICS INSTL - FBP

SHEET 1 OF 2 | PART NO 172358 | REV

REF 08/26/09

DWG NO 172358

(27A)

GRAPHICS INST - 2010 SIGHTSEER F.B.P.
GARNET

(92A)

GRAPHICS INST - 2010 SIGHTSEER F.B.P.
DESERT SAND

(24C)

GRAPHICS INST - 2010 SIGHTSEER F.B.P.
IRON GRAY

(24B)

GRAPHICS INST - 2010 SIGHTSEER F.B.P.
STELLAR BLUE
REV. D

FIRST USED
2010 D-SERIES (SIGHTSEER)

SPECIFICATION PRINT
DO NOT SCALE

TITLE:
GRAPHICS INSTL - FBP

SHEET 2 | PART NO 172358 | REV

RELEASE	REV A	DATE	DWG NO 171389

REV	ZONE	REVISION RECORD	DATE	DFTR-ORIG

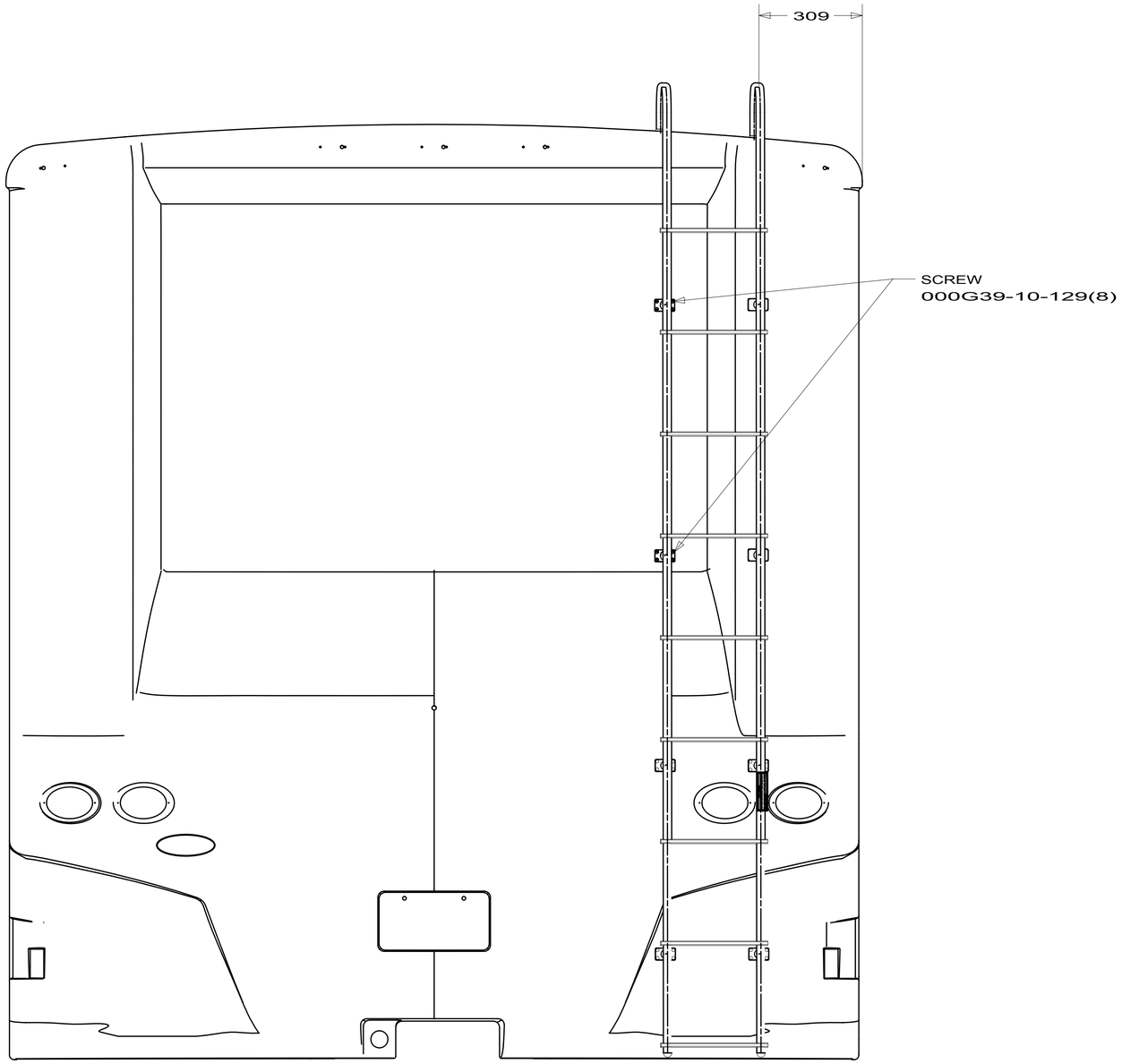

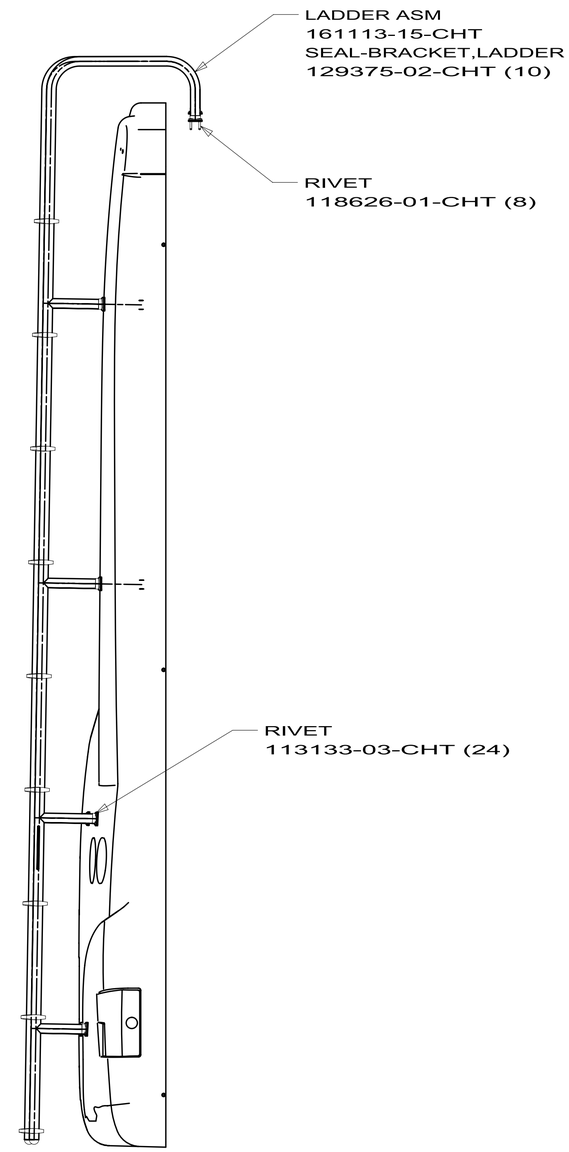

COPYRIGHT 2009
WINNEBAGO
INDUSTRIES, INC.

DFTR	ORIG. DATE
CHKR	ALL DIMENSIONS ARE IN MILLIMETERS
P.E.	
M.E.	FIRST USED
DSNR	10 E-SERIES

UNSPECIFIED TOLERANCES ARE:
WHOLE DIM (X) ±
ONE-PLACE (X.X) ±
TWO-PLACE (X.XX) ±
ANGLE ±

MATERIAL:

THIRD ANGLE PROJECTION

DO NOT SCALE DRAWING

TITLE:
LADDER INSTL

SHEET OF | PART NO 171389 | REV

REF:

RELEASE	REV DATE A	DWG NO 171959
REV ZONE	REVISION RECORD	DATE DFTR-ORG

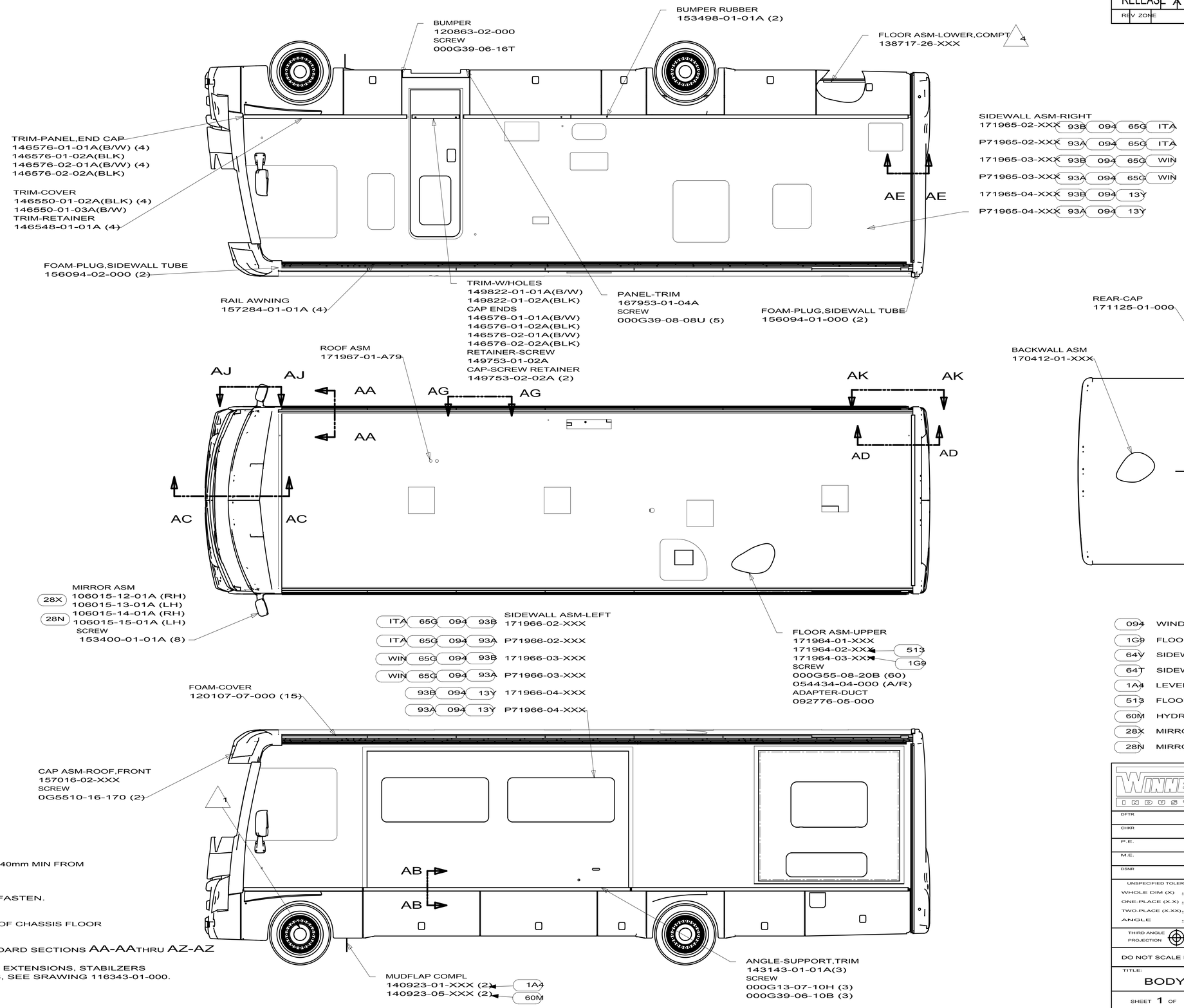

094	WINDOWS - SE-GI
1G9	FLOORCOVERING-VINYL-FRONT
64V	SIDEWALL-PREMIUM HIGH GLOSS
64T	SIDEWALLS-HIGH GLOSS
1A4	LEVELING JACK WITHOUT
513	FLOORCOVERING-VINYL-THRU OUT
60M	HYDRAULIC LEVEL JACKS-AUTO
28X	MIRRORS-EXTERIOR W/DEFROST
28N	MIRRORS-EXTERIOR

5. MUDFLAP AND/OR ROCKGUARD TO BE 40mm MIN FROM TIRES WHEN INSTALLED.

4. USE SCREWS G55-08-20B (130) TO FASTEN.

3. APPLY URETHANE ADHESIVE TO TOP OF CHASSIS FLOOR FRAME STRUCTURE PER ES0077.

2. SEE DRAWING 165258 FOR ALL STANDARD SECTIONS AA-AA THRU AZ-AZ

1. FOR WHEEL COVERS, LINERS, VALVE EXTENSIONS, STABILZERS AND FOR TIGHTENING OF LUG NUTS, SEE SRAWING 116343-01-000.

NOTES:

WINNEBAGO INDUSTRIES
COPYRIGHT 2010
WINNEBAGO
INDUSTRIES, INC.

DFTR	ORIG. DATE
CHKR	ALL DIMENSIONS ARE IN MILLIMETERS
P.E.	
M.E.	FIRST USED
DSNR	10 D31E
UNSPECIFIED TOLERANCES ARE: WHOLE DIM (X) ; ONE-PLACE (X.X) ; TWO-PLACE (X.XX) ; ANGLE :	MATERIAL:
THIRD ANGLE PROJECTION	
DO NOT SCALE DRAWING	REFER TO ES0018 FOR FASTENER TIGHTENING GUIDELINES
TITLE: BODY INSTL-PANEL & TRIM	
SHEET 1 OF 1	PART NO 171959 REV

REF:

4/7/2010

106015-12-01A

KEY	PART NUMBER	U/M	DESCRIPTION	VENDOR NO.
	106015-12-700	EA	MIRROR-FLAT-W/W/O HEAT	709448
	106015-12-701	EA	MIRROR-CONVEX - W/W/O HEAT	709449
	106015-12-702	EA	CAP/SCREW - (PKG OF 4) - BLK	748329 RND
	106015-12-703	EA	CONVEX GLASS/HANDSET/HOUSING	7095892
	106015-19-701	EA	GLASS/FLAT-W/BEZEL/HEAT/ANTI	709644
	119774-09-700	EA	PLATE-INNER SUPT/MIRROR HEAD	709418-7RH
	131431-01-701	EA	MOTOR	7475400

106015-13-01A

KEY	PART NUMBER	U/M	DESCRIPTION	VENDOR NO.
	106015-12-700	EA	MIRROR-FLAT-W/W/O HEAT	709448
	106015-12-701	EA	MIRROR-CONVEX - W/W/O HEAT	709449
	106015-12-702	EA	CAP/SCREW - (PKG OF 4) - BLK	748329 RND
	106015-12-703	EA	CONVEX GLASS/HANDSET/HOUSING	7095892
	106015-19-701	EA	GLASS/FLAT-W/BEZEL/HEAT/ANTI	709644
	119774-09-701	EA	PLATE INNER SUPT/MIRROR HEAD	709419-7LH
	131431-01-701	EA	MOTOR	7475400

106015-14-01A

KEY	PART NUMBER	U/M	DESCRIPTION	VENDOR NO.
	106015-12-700	EA	MIRROR-FLAT-W/W/O HEAT	709448
	106015-12-701	EA	MIRROR-CONVEX - W/W/O HEAT	709449
	106015-12-702	EA	CAP/SCREW - (PKG OF 4) - BLK	748329 RND
	106015-12-703	EA	CONVEX GLASS/HANDSET/HOUSING	7095892
	106015-19-701	EA	GLASS/FLAT-W/BEZEL/HEAT/ANTI	709644
	119774-09-700	EA	PLATE-INNER SUPT/MIRROR HEAD	709418-7RH

106015-15-01A

KEY	PART NUMBER	U/M	DESCRIPTION	VENDOR NO.
	106015-12-700	EA	MIRROR-FLAT-W/W/O HEAT	709448
	106015-12-701	EA	MIRROR-CONVEX - W/W/O HEAT	709449
	106015-12-702	EA	CAP/SCREW - (PKG OF 4) - BLK	748329 RND
	106015-12-703	EA	CONVEX GLASS/HANDSET/HOUSING	7095892
	106015-19-701	EA	GLASS/FLAT-W/BEZEL/HEAT/ANTI	709644
	119774-09-701	EA	PLATE INNER SUPT/MIRROR HEAD	709419-7LH

106015-18-01A, 106015-19-01A

KEY	PART NUMBER	U/M	DESCRIPTION	VENDOR NO.
	106015-12-702	EA	CAP/SCREW - (PKG OF 4) - BLK	748329 RND
	106015-16-700	EA	GLASS-FLAT W/HEAT ELEMENT	709450
	106015-18-700	EA	GLASS/CONVEX-KIT W/CLIP	709650
	106015-18-701	EA	ACTUATOR - CONVEX GLASS	7475410
	106015-18-702	EA	MOTOR - FLAT GLASS	7471180
	106015-18-703	EA	CONVEX REBUILT KIT	709651
	106015-19-700	EA	VIBRATION KIT - MIRROR GLASS, VELVAC	709645

COPYRIGHT © 2009 WINNEBAGO INDUSTRIES INC.

REV	ZONE	REVISION RECORD	DATE	DFTR-ORIG
		REV DATE	DWG NO 140923	

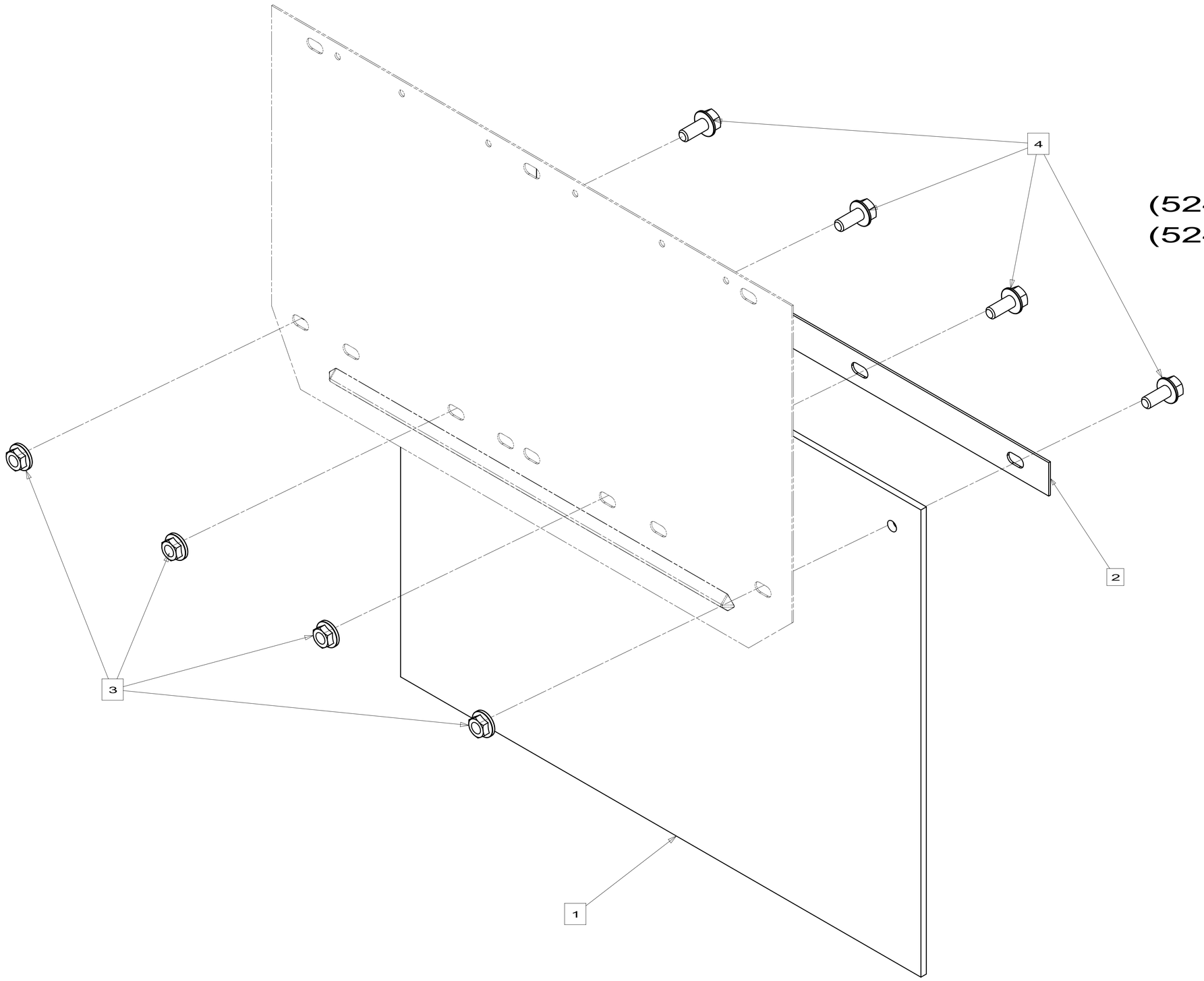

140923-01
331C
500-SERIES
(524A PASSENGER)
(524K PASSENGER)
700-SERIES
D-SERIES
E-SERIES
H SERIES
J SERIES

ITEM	PART NUMBER	DESCRIPTION	QTY
4	000C260512U	BOLT	4
3	000D390500U	NUT	4
2	14092201CHT	PLATE-MUDFLAP	1
1	01751601000	MUD FLAP-BLACK	1

WINNEBAGO INDUSTRIES

COPYRIGHT 2010
WINNEBAGO
INDUSTRIES, INC.

DFTR | ORIG. DATE
CHKR
P.E.
M.E.
DSNR

ALL DIMENSIONS ARE IN MILLIMETERS

FIRST USED
02 MOTORHOMES

UNSPECIFIED TOLERANCES ARE:
WHOLE DIM (X) ±
ONE-PLACE (X.X) ±
TWO-PLACE (X.XX) ±
ANGLE ±

MATERIAL:

THIRD ANGLE PROJECTION

DO NOT SCALE DRAWING

TITLE:
MUD FLAP COMPL

SHEET 1 OF 5 | PART NO 140923 | REV

REF: 1

2/16/2010

DWG NO 140923

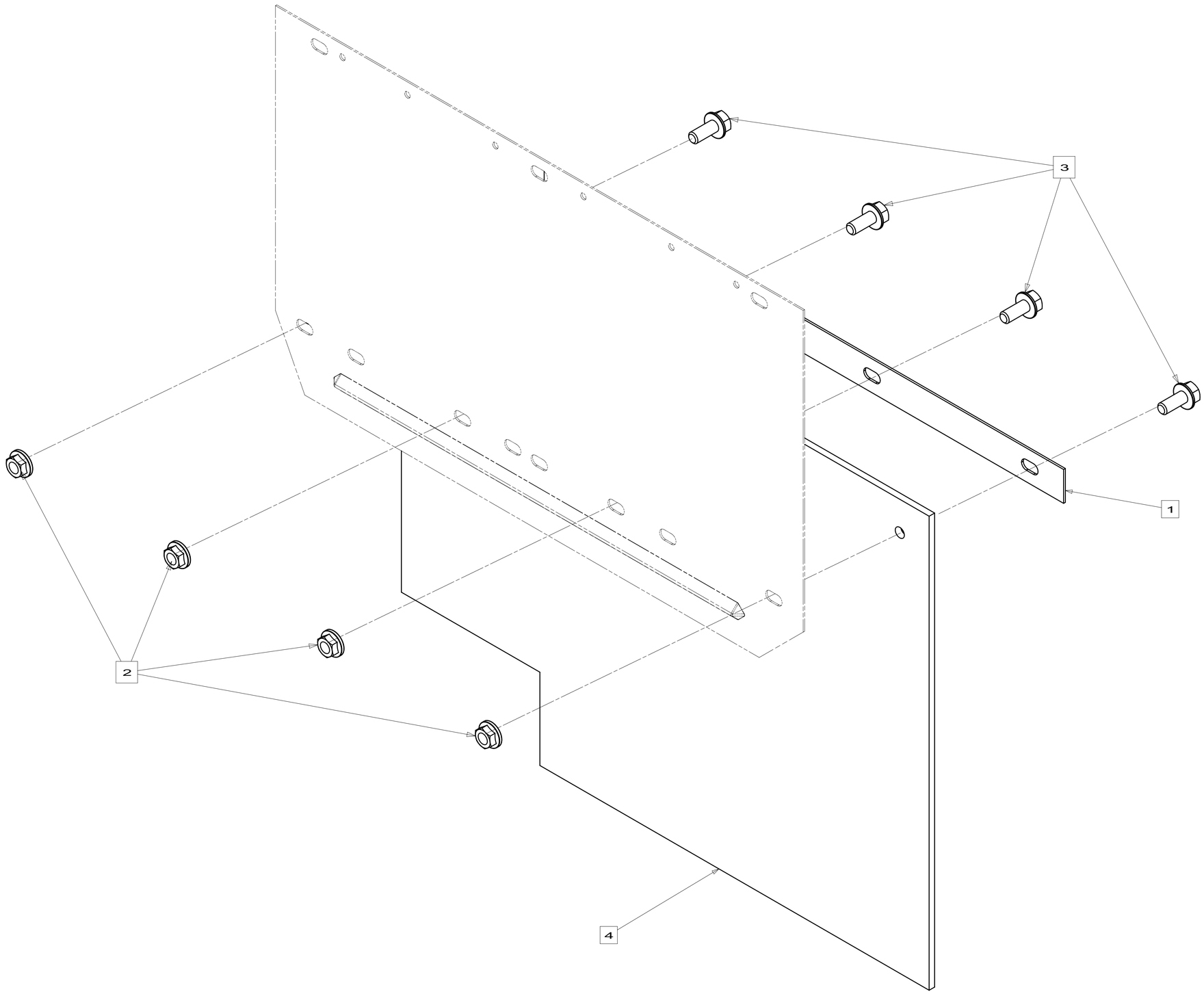

140923-05
D-SERIES
E-SERIES

ITEM	PART NUMBER	DESCRIPTION	QTY
4	01751608000	MUD FLAP-BL	1
3	000C260512U	BOLT	4
2	000D390500U	NUT	4
1	14092201CHT	PLATE-MUDFL	1

FIRST USED: 02 MOTORHOMES

DO NOT SCALE DRAWING

TITLE: MUD FLAP COMPL

SHEET 3 | PART NO 140923 | REV

2/16/2010

DWG NO 170412

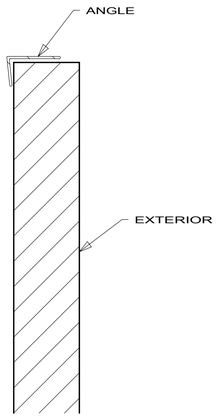

SECTION BA-BA

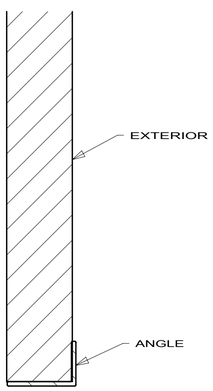

SECTION BB-BB

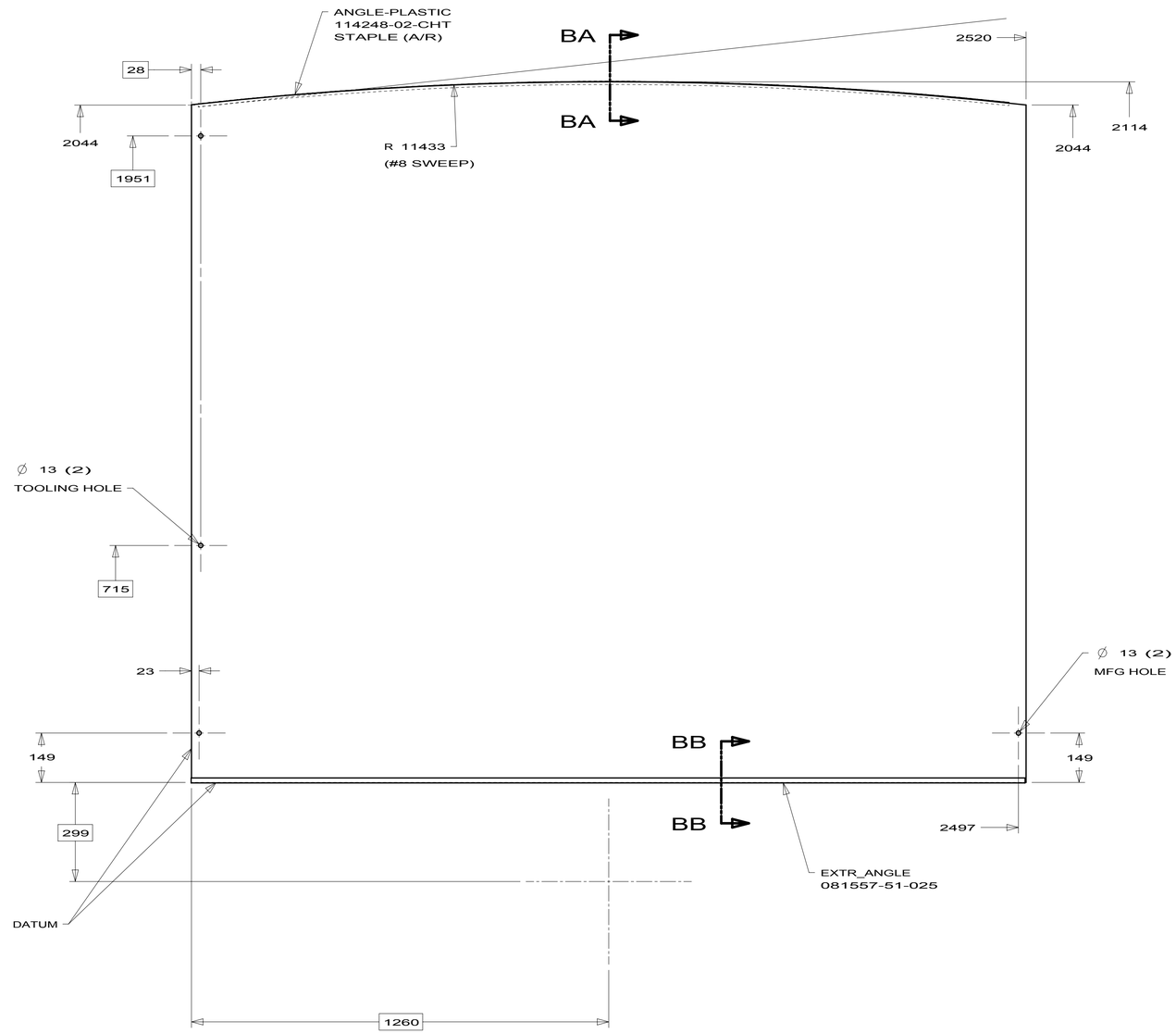

FIRST USED	10 D SERIES
	DO NOT SCALE DRAWING
TITLE:	BACKWALL ASM
SHEET 1	PART NO 170412 REV

DWG NO	SHEET
171125-01	1
171125-02	2

RELEASE	REV A	DATE	DWG NO 171125
REV	ZONE	REVISION RECORD	DATE	DFTR-ORIG

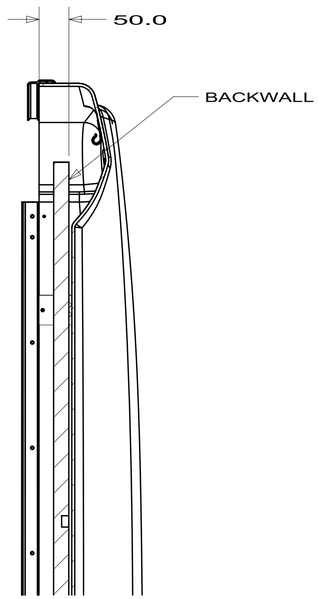

SECTION A-A

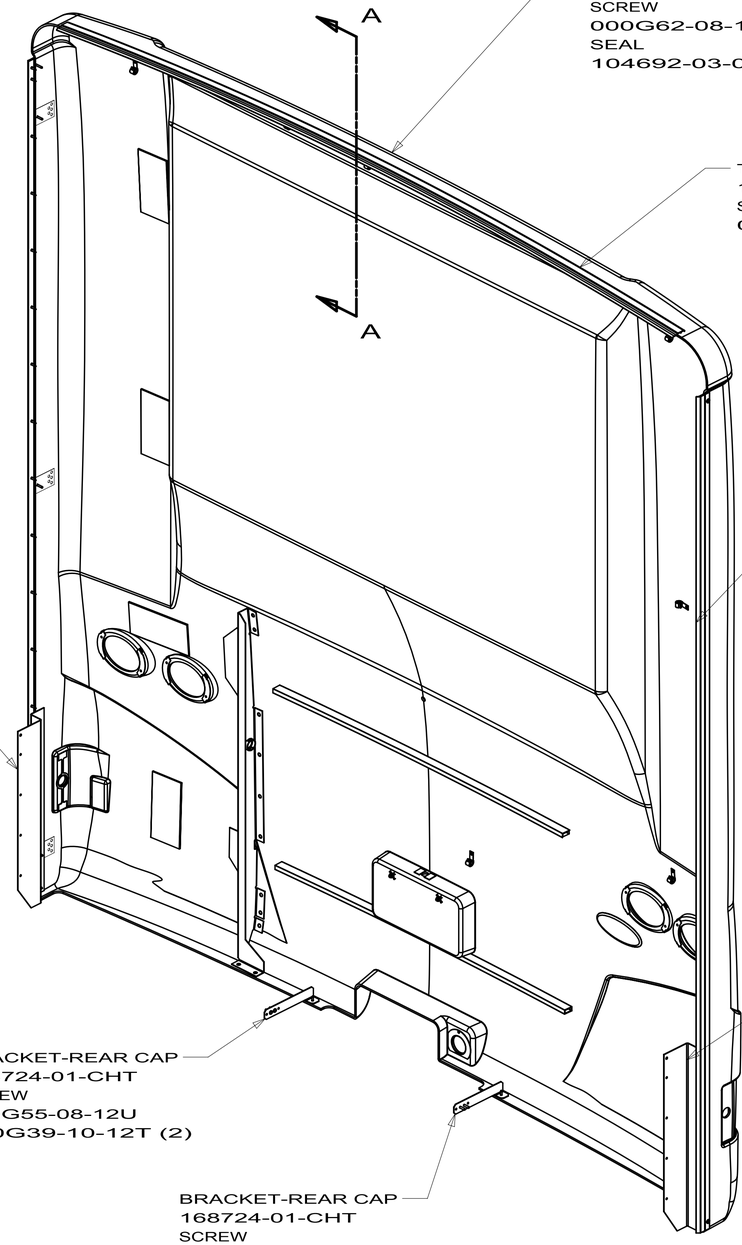

PANEL ASM-REAR CAP
171124-02-XXX
SCREW
000G62-08-16U (6)
SEAL
104692-03-000 (A/R)

TRIM-CAP,ROOF
174826-02-CHT
SCREW
000G12-08-12U (26)

TRIM-REAR, CAP TO SDW
092041-20-CHT (2)
MOLDING TRIM
091985-01-CHT (2)
(REF LENGTH 2589 EA)
SCREW
000G12-08-12U (34)
SCREW
000G55-08-16U (4)

PLATE-SEAL
172937-02-CHT
SCREW
000G39-10-12T (5)

PLATE-SEAL
172937-01-CHT
SCREW
000G39-10-12T (5)

BRACKET-REAR CAP
168724-01-CHT
SCREW
000G55-08-12U
000G39-10-12T (2)

BRACKET-REAR CAP
168724-01-CHT
SCREW
000G55-08-12U
000G39-10-12T (2)

1. RE-TORQUE BOLTS TO 75 FT-LBS AFTER ATTACHING THE REAR CAP BRACE TO THE REAR CLIP.

NOTES:

COPYRIGHT 2009
WINNEBAGO
INDUSTRIES, INC.

DFTR	ORIG. DATE
CHKR	ALL DIMENSIONS ARE IN MILLIMETERS
P.E.	
M.E.	FIRST USED
DSNR	10 E-SERIES

UNSPECIFIED TOLERANCES ARE:
WHOLE DIM (X) : 3
ONE-PLACE (X.X) : 1.5
TWO-PLACE (X.XX) : 0.50
ANGLE : 1°

MATERIAL:

THIRD ANGLE PROJECTION

DO NOT SCALE DRAWING

TITLE: REAR CAP INSTL

SHEET 1 OF 2 | PART NO 171125 | REV

REF: 1

DWG NO 171125

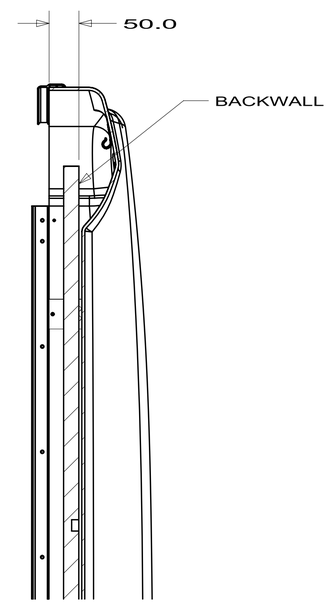

SECTION A-A

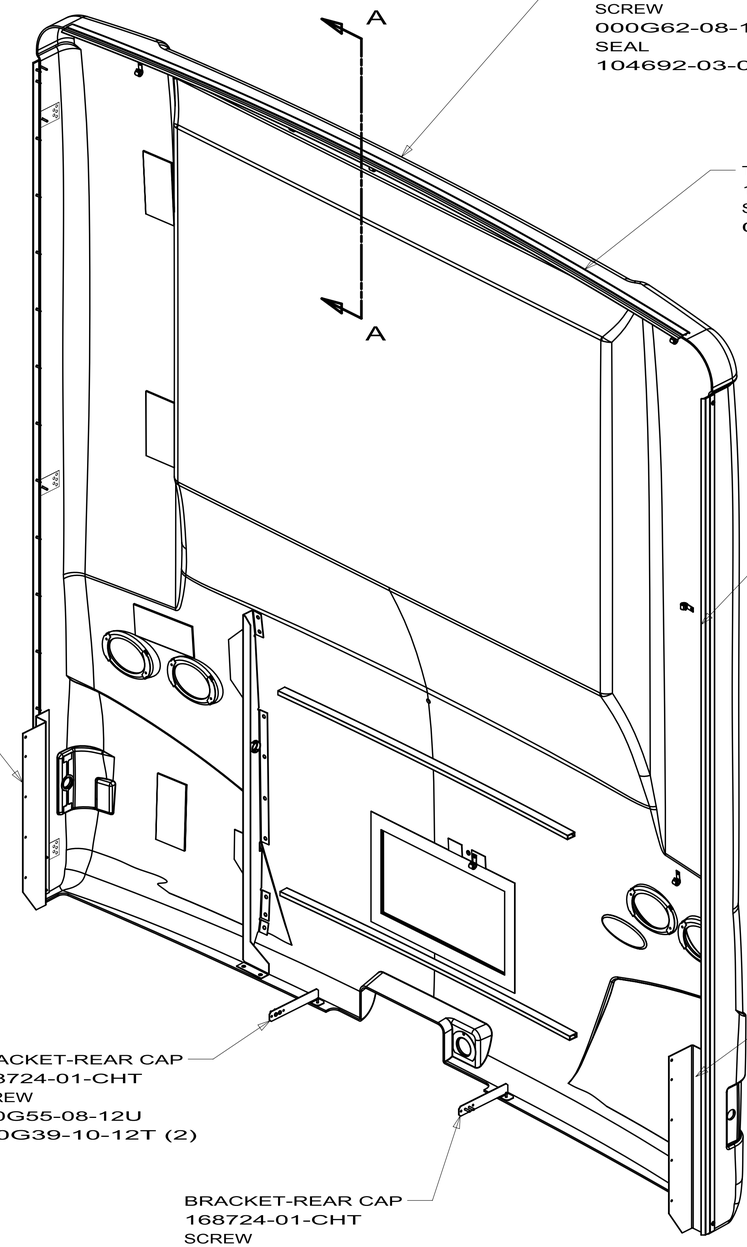

PANEL ASM-REAR CAP
171124-03-XXX
SCREW
000G62-08-16U (6)
SEAL
104692-03-000 (A/R)

TRIM-CAP,ROOF
174826-02-CHT
SCREW
000G12-08-12U (26)

TRIM-REAR, CAP TO SDW
092041-20-CHT (2)
MOLDING TRIM
091985-01-CHT (2)
(REF LENGTH 2589 EA)
SCREW
000G12-08-12U (34)
SCREW
000G55-08-16U (4)

PLATE-SEAL
172937-02-CHT
SCREW
000G39-10-12T (5)

PLATE-SEAL
172937-01-CHT
SCREW
000G39-10-12T (5)

BRACKET-REAR CAP
168724-01-CHT
SCREW
000G55-08-12U
000G39-10-12T (2)

BRACKET-REAR CAP
168724-01-CHT
SCREW
000G55-08-12U
000G39-10-12T (2)

FIRST USED	10 D33C
	DO NOT SCALE DRAWING
TITLE:	REAR CAP INSTL
SHEET 2	PART NO 171125 REV

DWG NO 171965

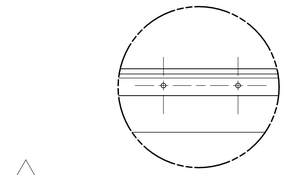

DETAIL GB

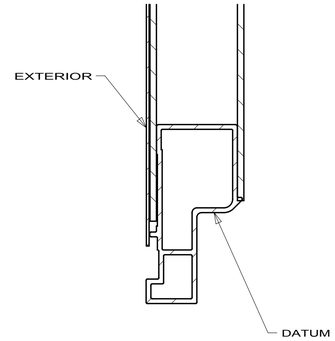

SECTION GE-GE

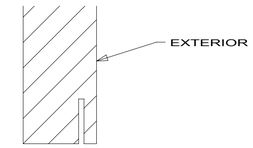

SECTION GA-GA

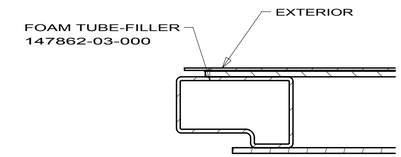

SECTION GF-GF

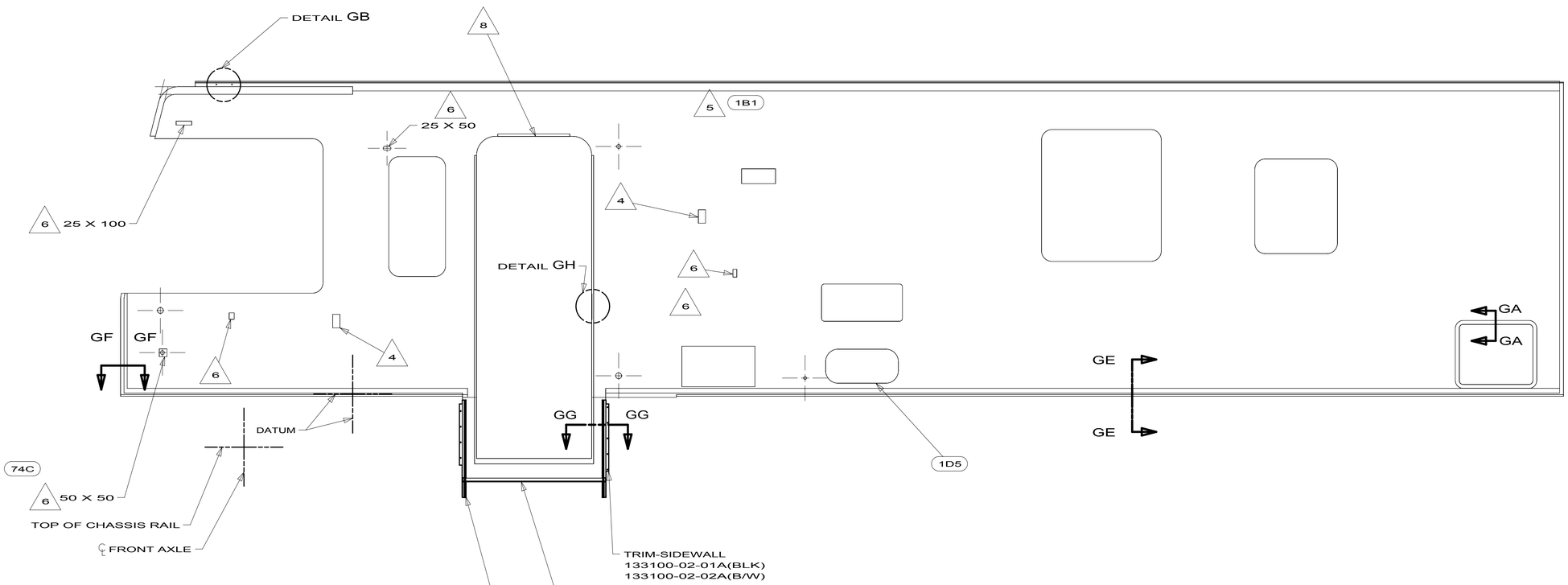

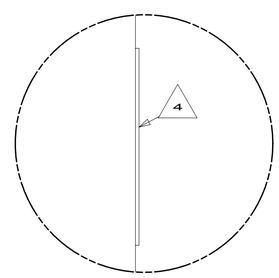

DETAIL GH

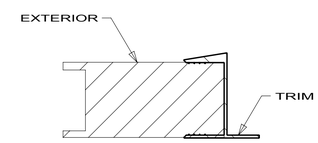

SECTION GG-GG

NOTES:

1. TOLERANCE FOR CUTOUT ± 1.5.
2. PANEL SHOWN FROM INTERIOR SIDE.
3. ALL RADII 9.5 UNLESS OTHERWISE SPECIFIED.
4. CUTOUT THRU INNER PANELING ONLY.
5. THRU EXTERIOR SURFACE AND FOAM.
6. THRU INTERIOR SURFACE AND FOAM.
7. THRU INNER WALL OF TUBE ONLY.
8. INSERT-DOOR,ENTRANCE 136177-03-XXX IS MADE FROM CUTOUT.

74C VIDEO CAMERA SYSTEM
1B1 CODES/STANDARDS USA
1D5 ENTERTAINMENT CENTR/EXT W/CD

NOTICE

CHANGES TO THIS SHEET MAY AFFECT OTHERS

FIRST USED	10 D31E
	DO NOT SCALE DRAWING
TITLE:	SIDEWALL ASM-RIGHT
SHEET 1	PART NO 171965 REV

4/2/2010

DWG NO	ROOM COMPL-SLIDEOUT	SLUG ASM-SLIDEOUT	PANEL ASM-SLIDEOUT,RH	PANEL ASM-SLIDEOUT,LH	FLOOR COVERING	
171968-07	171968-17-XXX	171966-15-XXX	P62979-23-XXX	P62979-25-XXX	9CARPT-01-000	64V 094 65G
171968-08	171968-18-XXX	171966-17-XXX	P62979-24-XXX	P62979-26-XXX	9CARPT-01-000	64V 094 13Y
171968-09	171968-19-XXX	171966-15-XXX	P62979-23-XXX	P62979-25-XXX	9CARPT-01-000	64V 094 513 1G9 65G
171968-10	171968-20-XXX	171966-17-XXX	P62979-24-XXX	P62979-26-XXX	9CARPT-01-000	64V 094 513 1G9 13Y
171968-50	171968-21-XXX	171966-15-XXX	P62979-23-XXX	P62979-25-XXX	9CARPT-01-000 & 9FLOOR-01-000	64V 094 645 65G
171968-51	171968-22-XXX	171966-17-XXX	P62979-24-XXX	P62979-26-XXX	9CARPT-01-000 & 9FLOOR-01-000	64V 094 645 13Y

RELEASE	REV A	DATE	DWG NO 171968
REV	ZONE	REVISION RECORD	DATE	DFTR-ORIG

17. STOP BLOCK TO BE POSITIONED IN HOLES DESIGNATED FOR 30" STROKE LENGTH.

16. TACK WELD FRONT SLIDEOUT COMPARTMENT SUPPORT BRACKETS TO RAM MOUNTING BRACKETS.

15. TORQUE TO 64 FT-LBS

14. ADJUST THIS DIMENSION TO ACHIEVE 8mm ±2 OF FALL AT END OF RAM STROKE.

13. WRAP CARPET AROUND EDGE IN AREA SHOWN.

12. SECURE ONE OF THE SLIDEOUT ROOM ACTIVATION KEYS TO THE ROD-LOCK STRAP. KEYS ARE INCLUDED WITH SWITCH ASSEMBLY P/N 163097(REF).

11. TORQUE ALL BOLTS PER ES0018 UNLESS OTHERWISE SPECIFIED. (SEE TABLE BELOW)

SIZE	TORQUE VALUE (FT-LBS)
1/4 - 20 (.250)	76 (IN-LBS)
5/16 - 18 (.3125)	13 (FT-LBS)
3/8 - 16 (.375)	23 (FT-LBS)
7/16 - 14 (.4375)	37 (FT-LBS)
1/2 - 13 (.500)	57 (FT-LBS)

10. USE POLY-CLEAR 47034-07-000 AND ATTACH IT USING WASHER 44533-01-000 TO PROTECT THE SLIDEOUT FLOOR.

9. SCREWS CANNOT BE REUSED. ANY TIME A SCREW IS REMOVED IT MUST BE DISCARDED AND REPLACED WITH A NEW SCREW TO INSURE THE THREADS SEAL.

8. USE SCREW 000G39-08-08S TO HOLD EACH END OF TRIM.

7. SEE SEALANT MANUAL.

6. LOOSEN BOLTS TO ALLOW ROOM TO MOVE SIDE TO SIDE ON THE MOUNTING BRACKETS UNTIL IT IS CENTERED IN THE OPENING. TIGHTEN AFTER ALL ADJUSTMENTS ARE COMPLETE.

5. LOOSEN JAM NUTS AND ADJUST BOLT TO MOVE ROOM UP OR DOWN TO BE CENTERED IN THE SIDEWALL OPENING. TIGHTEN AFTER ALL ADJUSTMENTS ARE COMPLETE.

4. THIS IS A NOMINAL DIMENSION; THE PARTS SHOULD BE ADJUSTED AS REQUIRED FROM THERE.

3. THE RETRACTED LENGTH IS ADJUSTED BY THREADING THE STOP BOLT IN OR OUT UNTIL THE OUTSIDE WALL OF THE ROOM SEALS AGAINST THE SIDEWALL.

2. THE EXTENDED LENGTH IS ADJUSTED BY TURNING THE LOCK NUTS ON THE PISTON RODS IN OR OUT UNTIL THE SLIDEOUT ROOM SEALS AGAINST THE SIDEWALL.

1. FOR ADDITIONAL INFORMATION SEE WIRE INSTALLATION FRONT END AND THE LEVELING JACK INSTALLATION DRAWINGS.

NOTES:

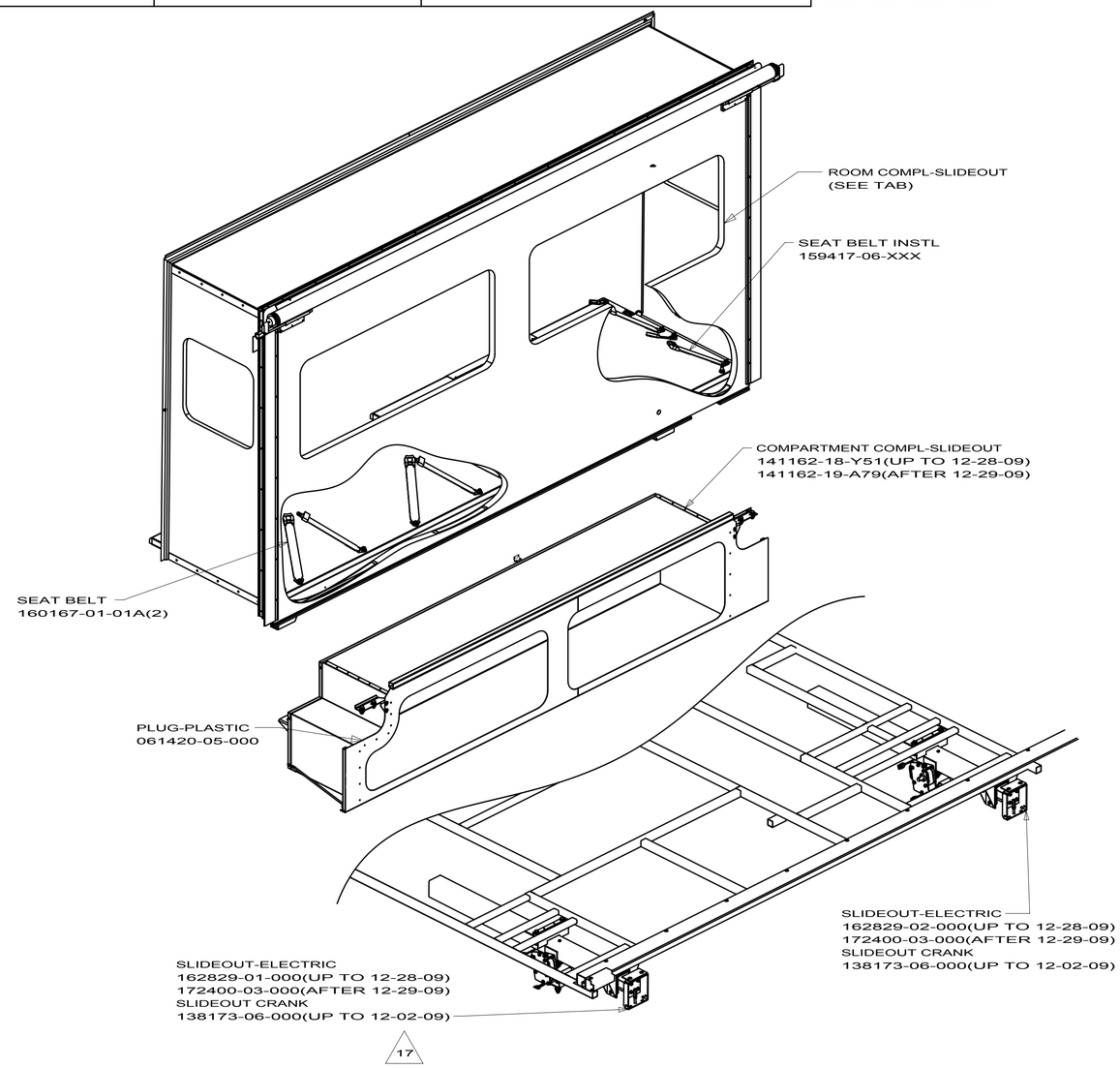

65G	WINDOW COACH-SINGLE PANE
13Y	WINDOWS-COACH-DUAL PANE
094	WINDOWS - SE-GI
1G9	FLOORCOVERING-VINYL-FRONT
645	RENTAL - CAMPING WORLD
513	FLOORCOVERING-VINYL-THRU OUT
64V	SIDEWALL-PREMIUM HIGH GLOSS
64T	SIDEWALLS-HIGH GLOSS

WINNEBAGO INDUSTRIES

COPYRIGHT 2010
WINNEBAGO
INDUSTRIES, INC.

DFTR	ORIG. DATE
CHKR	ALL DIMENSIONS ARE IN MILLIMETERS
P.E.	
M.E.	FIRST USED
DSNR	10 D31E
UNSPECIFIED TOLERANCES ARE: WHOLE DIM (X) : 3; ONE-PLACE (X.X) :; TWO-PLACE (X.XX) :; ANGLE :	MATERIAL:
THIRD ANGLE PROJECTION	
DO NOT SCALE DRAWING	REFER TO ES0018 FOR FASTENER TIGHTENING GUIDELINES

TITLE: SLIDEOUT COMPL-FRONT,LH

SHEET 1 OF 5 | PART NO 171968 | REV

REF: 1

4/6/2010

DWG NO 171968

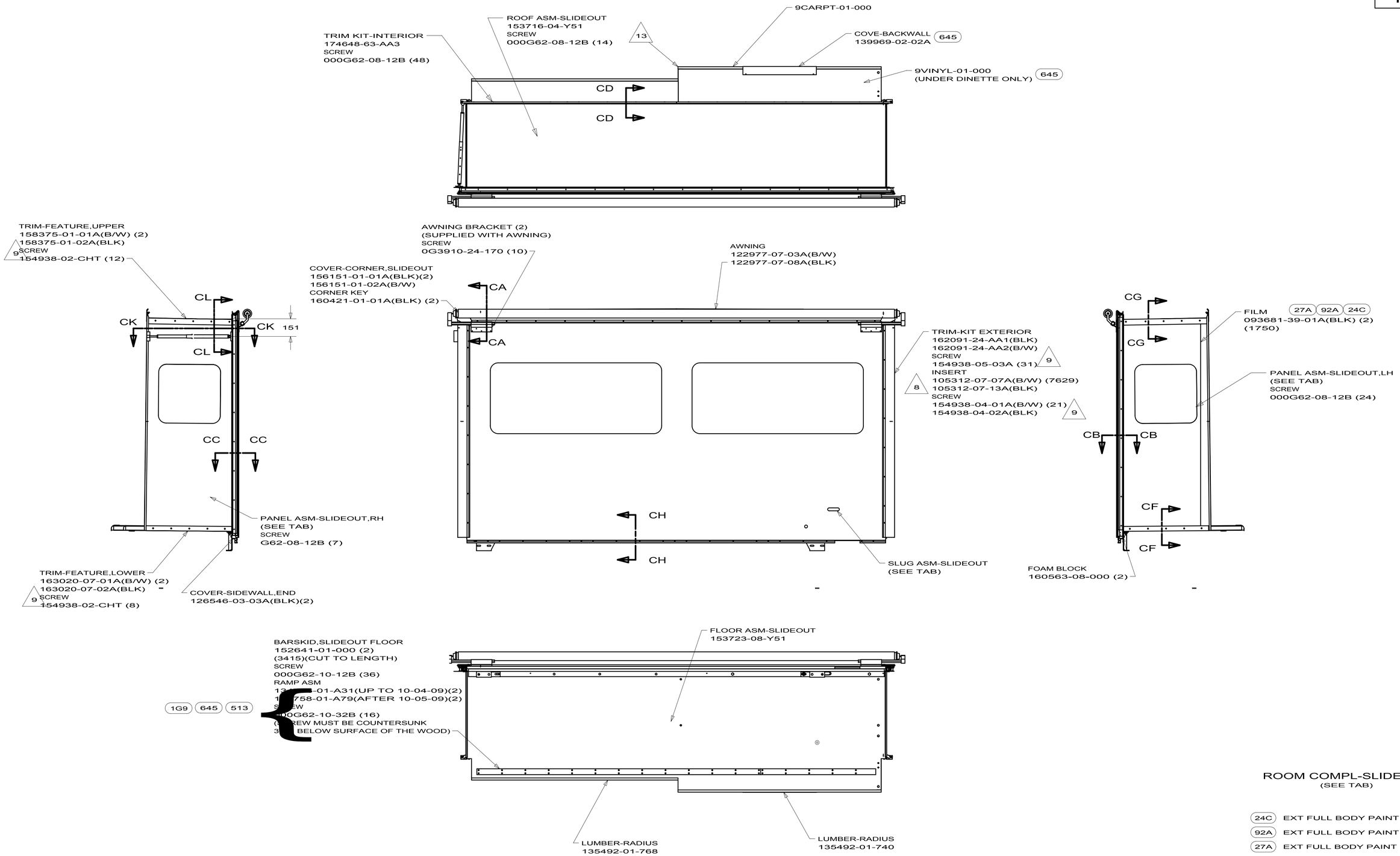

ROOM COMPL-SLIDEOUT
(SEE TAB)

24C EXT FULL BODY PAINT PKG # 3
92A EXT FULL BODY PAINT PKG # 2
27A EXT FULL BODY PAINT PKG #1

513 FLOORCOVERING-VINYL-THRU OUT
645 RENTAL-MOTURIS

FIRST USED	10 D31E
DO NOT SCALE DRAWING	
TITLE:	SLIDEOUT COMPL-FRONT,LH
SHEET 2	PART NO 171968 REV

4/6/2010

DWG NO 171968

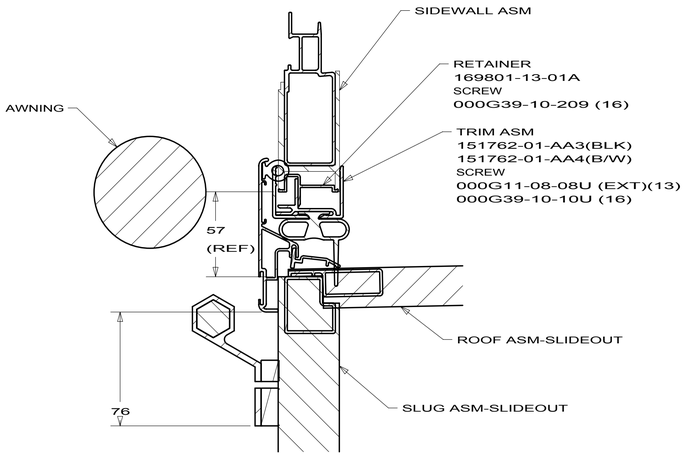

SECTION CA-CA

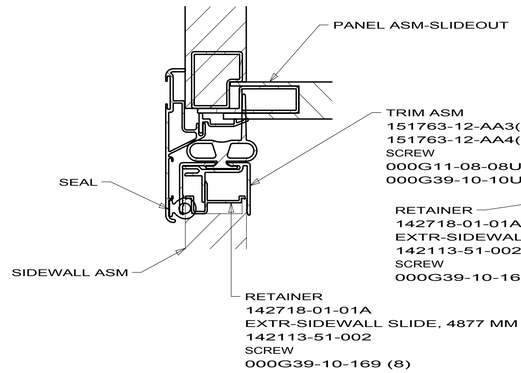

SECTION CB-CB

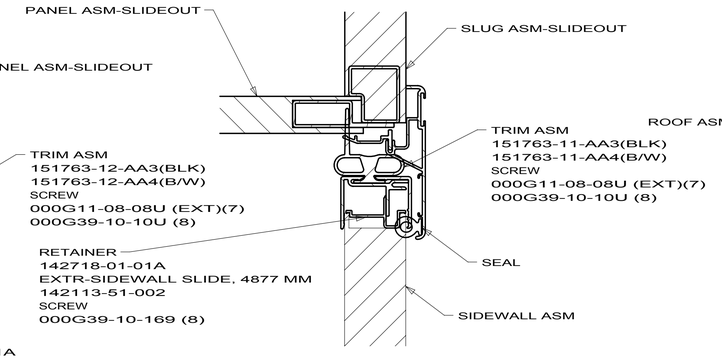

SECTION CC-CC

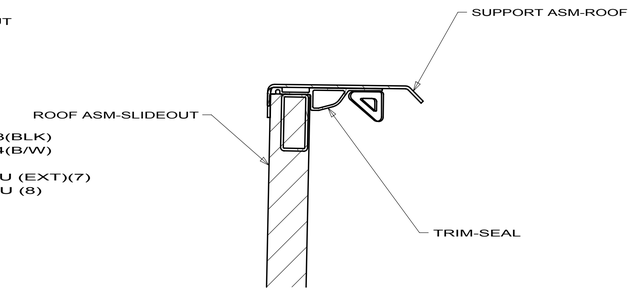

SECTION CD-CD

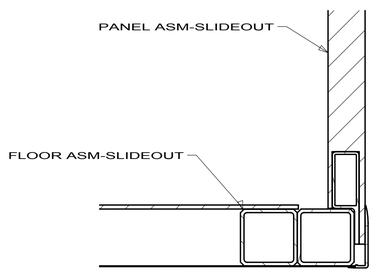

SECTION CF-CF

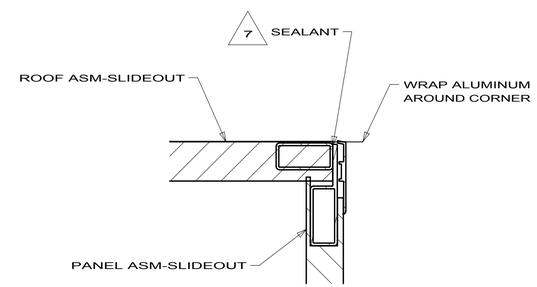

SECTION CG-CG

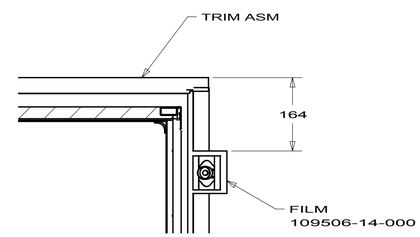

SECTION CL-CL

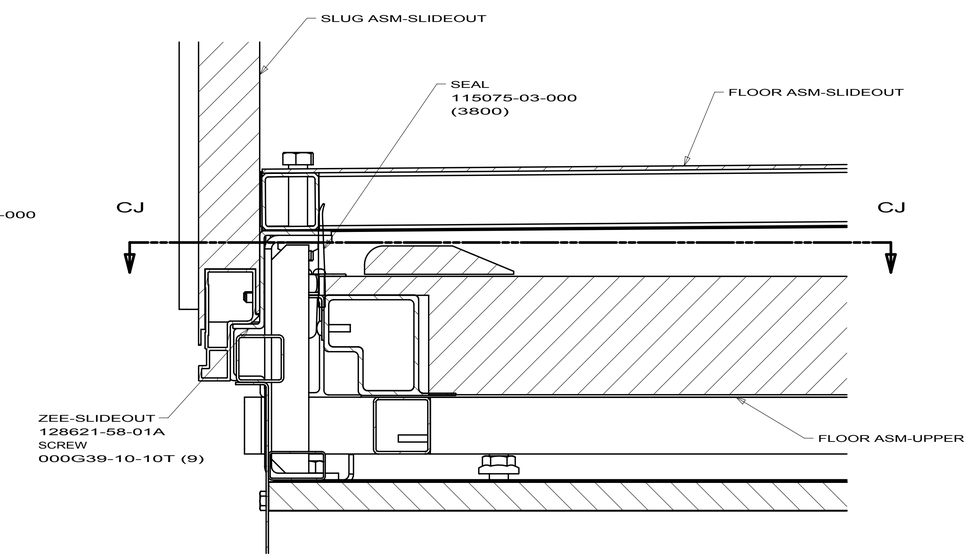

SECTION CH-CH

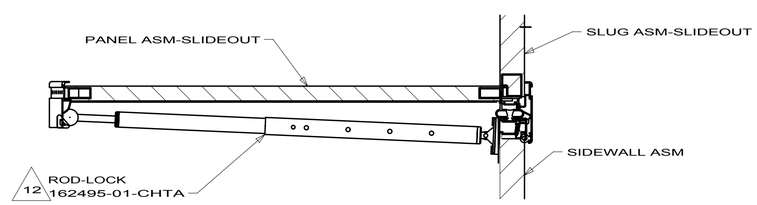

SECTION CK-CK

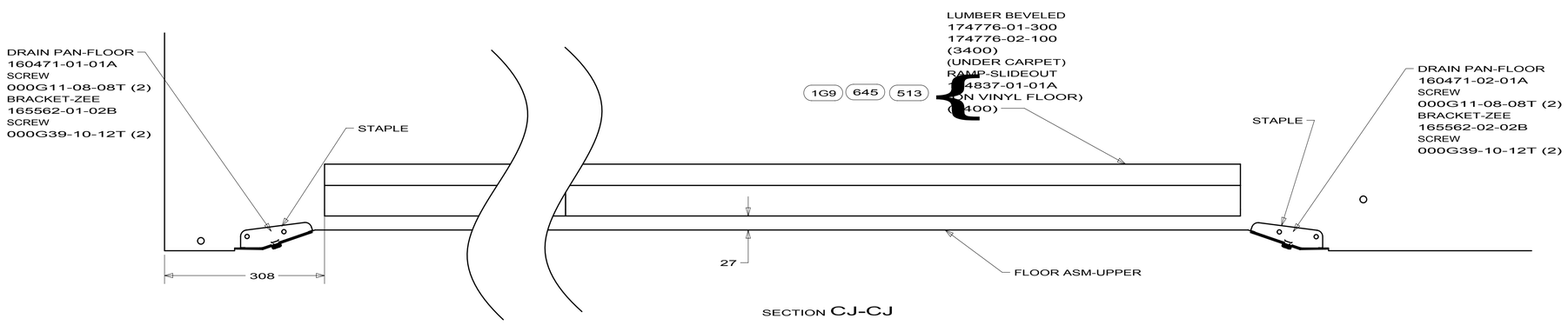

SECTION CJ-CJ

FIRST USED	10 D31E
DO NOT SCALE DRAWING	
TITLE:	SLIDEOUT COMPL-FRONT,LH
SHEET 3	PART NO 171968 REV

4/6/2010

DWG NO 171968

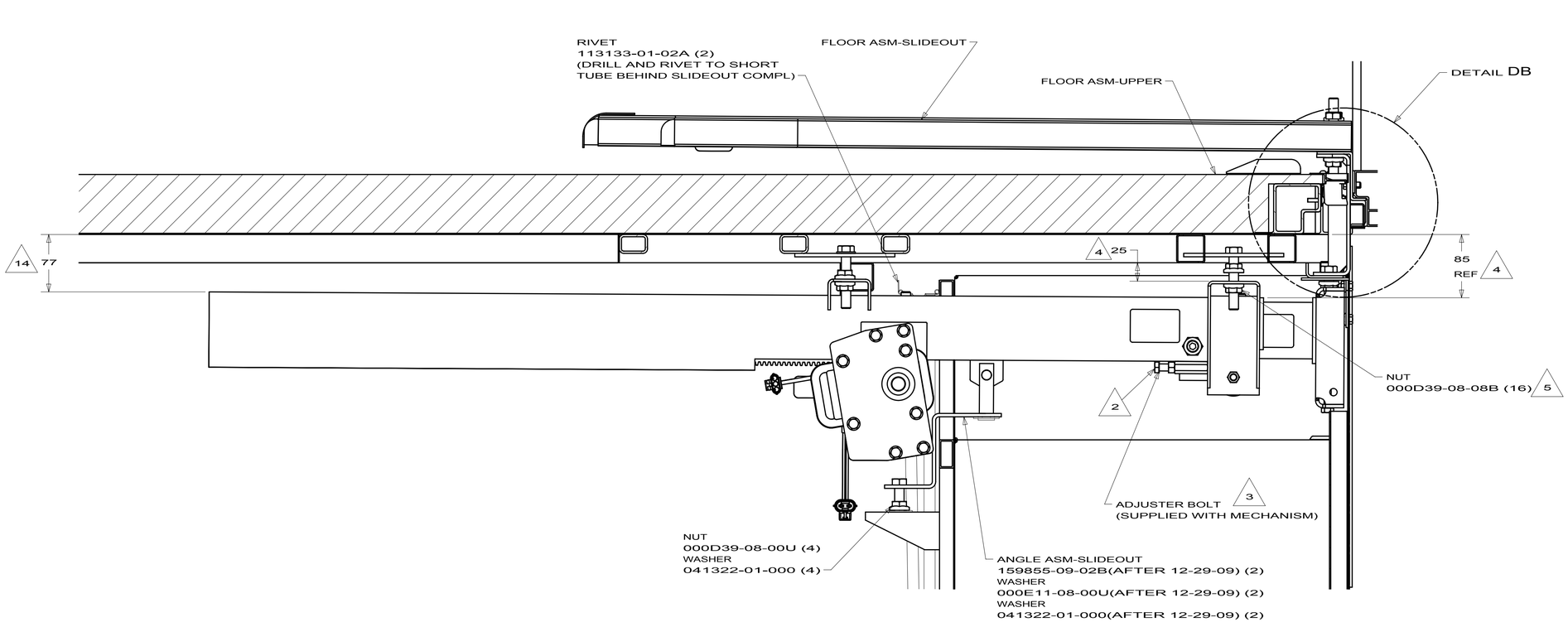

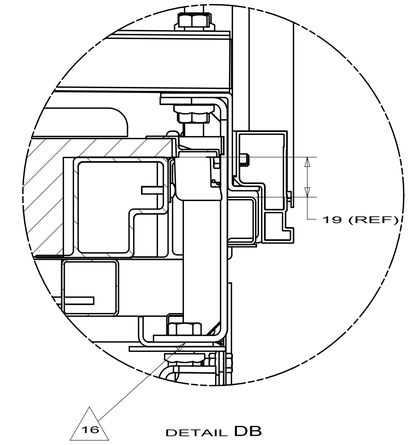

SECTION DA-DA

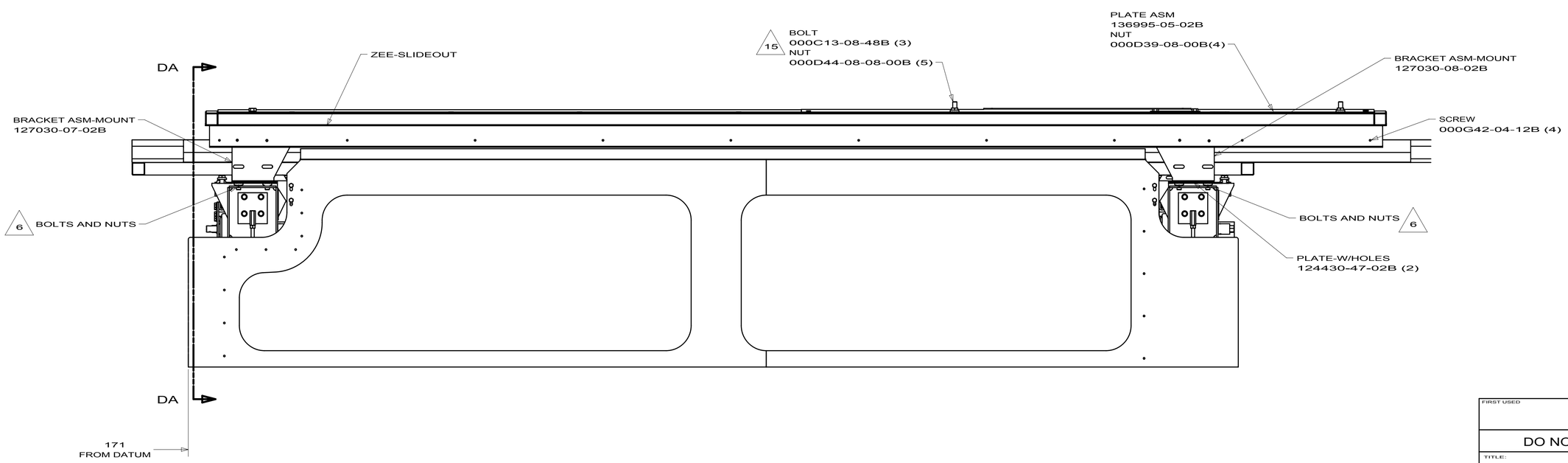

FIRST USED	10 D31E
DO NOT SCALE DRAWING	
TITLE:	SLIDEOUT COMPL-FRONT,LH
SHEET 4	PART NO 171968 REV

4/6/2010

DWG NO 171968

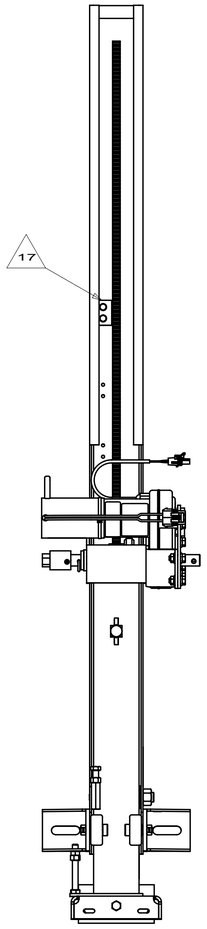

VIEW OF BOTTOM SIDE OF RAMS

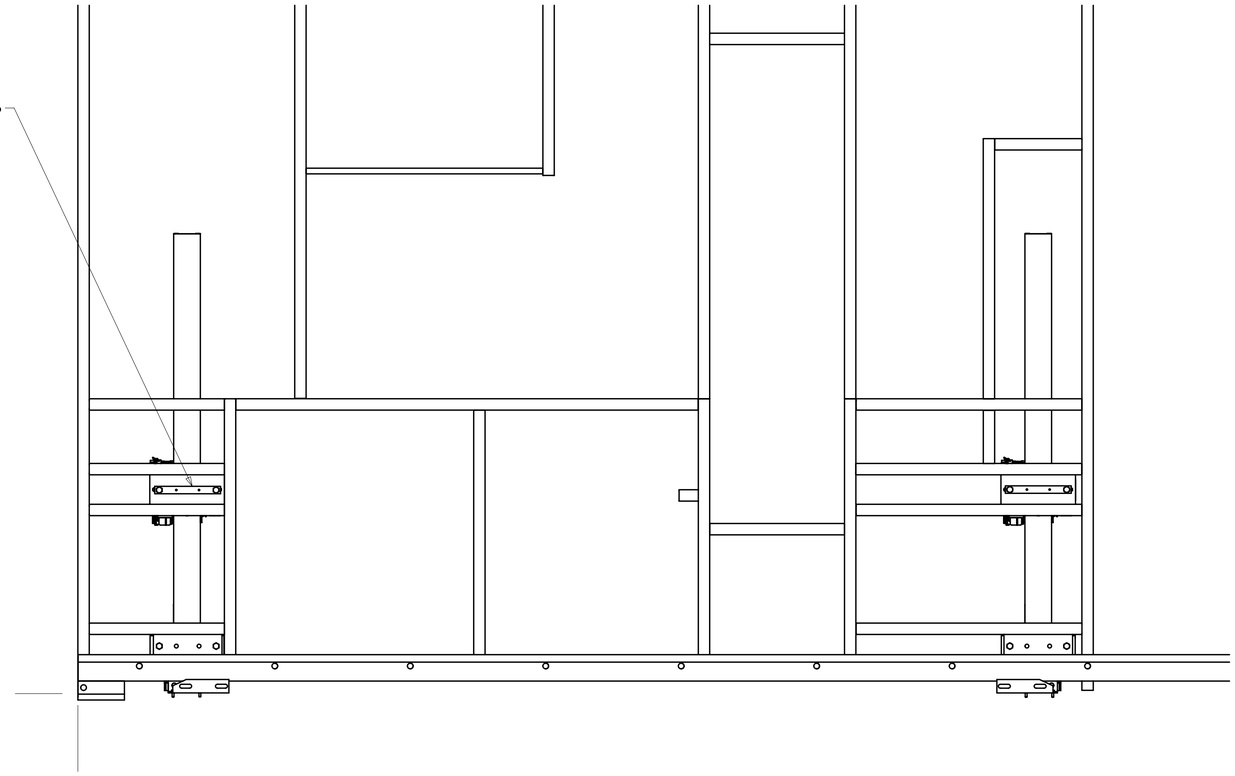

FIRST USED	10 D31E
DO NOT SCALE DRAWING	
TITLE:	SLIDEOUT COMPL-FRONT,LH
SHEET 5	PART NO 171968 REV

4/6/2010

RELEASE	REV A	DATE	DWG NO 170511

REV	ZONE	REVISION RECORD	DATE	DFTR-ORIG

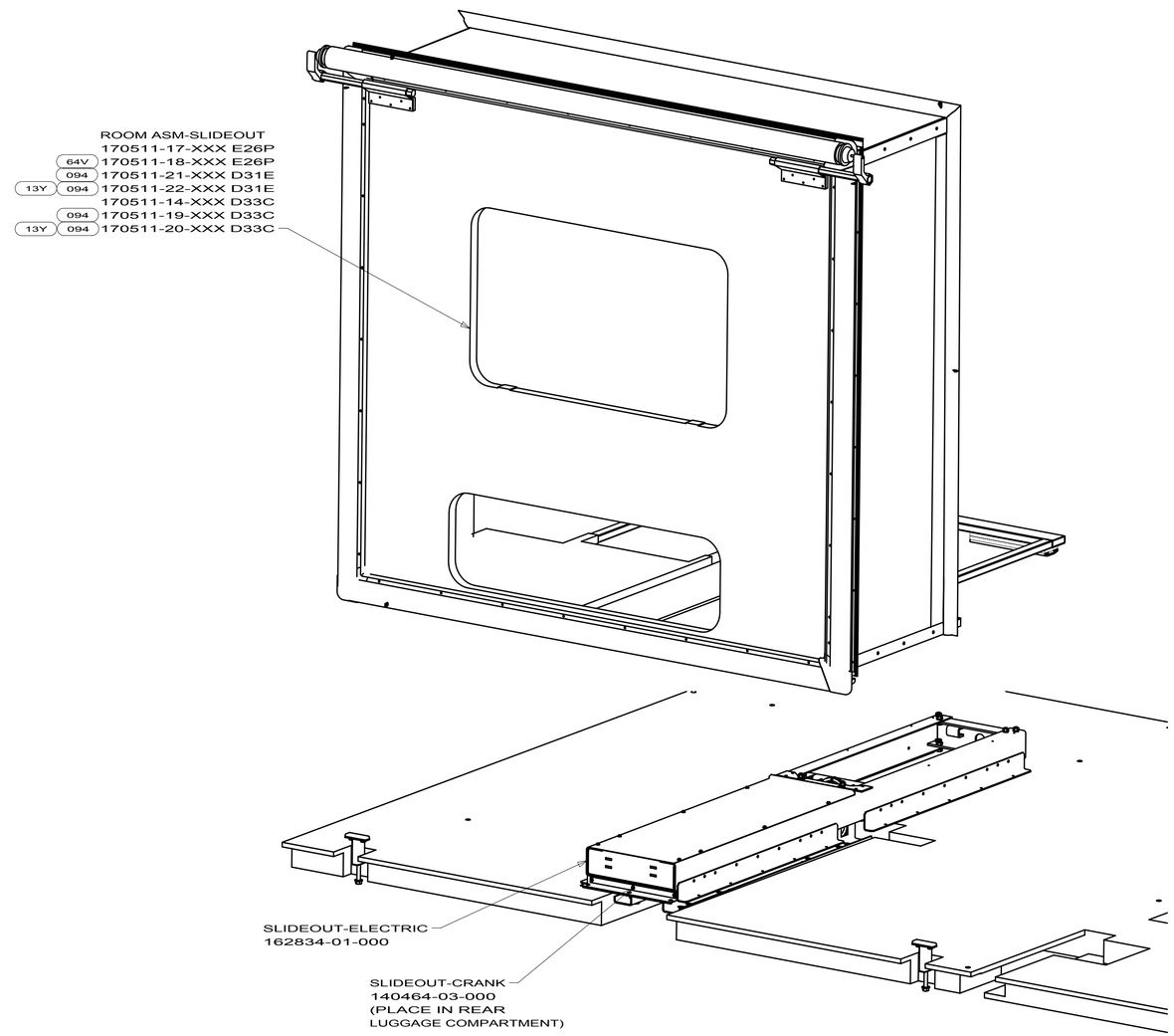

12. TORQUE ALL BOLTS PER ES0018 UNLESS OTHERWISE SPECIFIED. (SEE TABLE BELOW)

SIZE	TORQUE VALUE (FT-LBS)
1/4 - 20 (.250)	76 (IN-LBS)
5/16 - 18 (.3125)	13 (FT-LBS)
3/8 - 16 (.375)	23 (FT-LBS)
7/16 - 14 (.4375)	37 (FT-LBS)
1/2 - 13 (.500)	57 (FT-LBS)

11. USE POLY-CLEAR 47034-07-000 AND ATTACH IT USING WASHER 44533-01-000 TO PROTECT THE SLIDEOUT FLOOR.

10. POSITION SEAL FLUSH WITH LOWER TRIM AND TIGHT AGAINST INNER TRIM.

9. SCREWS CANNOT BE REUSED. ANY TIME A SCREW IS REMOVED IT MUST BE DISCARDED AND REPLACED WITH A NEW SCREW TO INSURE THE THREADS SEAL.

8. USE SCREW G39-08-08S TO HOLD EACH END OF TRIM.

7. SEE SEALANT MANUAL.

6. LOOSEN BOLTS TO ALLOW ROOM TO MOVE SIDE TO SIDE ON THE MOUNTING BRACKETS UNTIL IT IS CENTERED IN THE OPENING. TIGHTEN AFTER ALL ADJUSTMENTS ARE COMPLETE.

5. ADJUST BOLT TO MOVE ROOM UP OR DOWN TO BE CENTERED IN THE SIDEWALL OPENING. TIGHTEN AFTER ALL ADJUSTMENTS ARE COMPLETE.

4. THIS IS A NOMINAL DIMENSION; THE PARTS SHOULD BE ADJUSTED AS REQUIRED FROM THERE.

3. THE RETRACTED LENGTH IS ADJUSTED UNTIL THE OUTSIDE TRIM OF THE ROOM SEALS AGAINST THE OUTSIDE OF THE SIDEWALL

2. THE EXTENDED LENGTH IS ADJUSTED UNTIL THE INSIDE TRIM OF THE ROOM SEALS AGAINST THE INSIDE OF THE SIDEWALL.

1. FOR ADDITIONAL INFORMATION SEE WIRE INSTALLATION FRONT END AND THE LEVELING JACK INSTALLATION DRAWINGS.

NOTES:

64T SIDEWALLS-HIGH GLOSS
65G WINDOW COACH-SINGLE PANE
64V SIDEWALL-PREMIUM HIGH GLOSS
13Y WINDOWS-COACH-DUAL PANE
094 WINDOWS - SE-GI

WINNEBAGO INDUSTRIES

COPYRIGHT 2010
WINNEBAGO
INDUSTRIES, INC.

DFTR	ORIG. DATE
CHKR	ALL DIMENSIONS ARE IN MILLIMETERS
P.E.	
M.E.	FIRST USED
DSNR	10 E29R
UNSPECIFIED TOLERANCES ARE: WHOLE DIM (X) ± 3; ONE-PLACE (X.X) ±; TWO-PLACE (X.XX) ±; ANGLE ±	MATERIAL:
THIRD ANGLE PROJECTION	
DO NOT SCALE DRAWING	REFER TO ES0018 FOR FASTENER TIGHTENING GUIDELINES

TITLE: SLIDEOUT COMPL-REAR,LH

SHEET 1 OF 3	PART NO 170511	REV

REF: 1

4/6/2010

DWG NO 170511

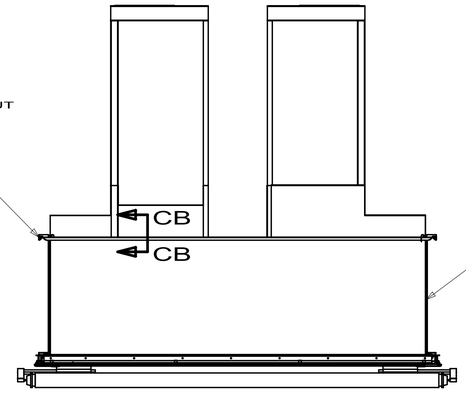

TRIM KIT-INTERIOR,SLIDEOUT
174648-02-XXX
SCREW
000G62-08-12B (25)

ROOF ASM-SLIDEOUT
171733-01-XXX
SCREW
000G62-08-12B (20)

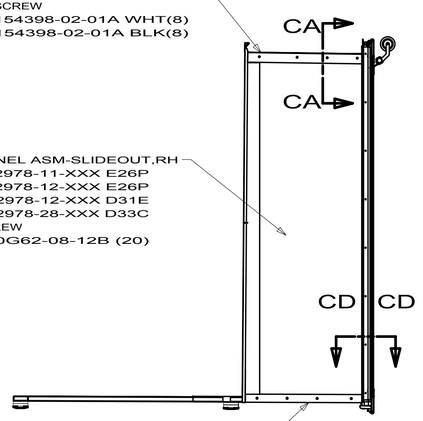

TRIM FEATURE,UPPER
158375-04-01A WHT (2)
158375-04-02A BLK (2)
SCREW
9 154398-02-01A WHT(8)
154398-02-01A BLK(8)

PANEL ASM-SLIDEOUT,RH
162978-11-XXX E26P
64V 162978-12-XXX E26P
P62978-12-XXX D31E
P62978-28-XXX D33C
SCREW
000G62-08-12B (20)

TRIM FEATURE,LOWER
163020-08-01A WHT (2)
163020-08-02A BLK (2)
SCREW
9 154938-02-01A WHT (8)
154938-02-02A BLK (8)

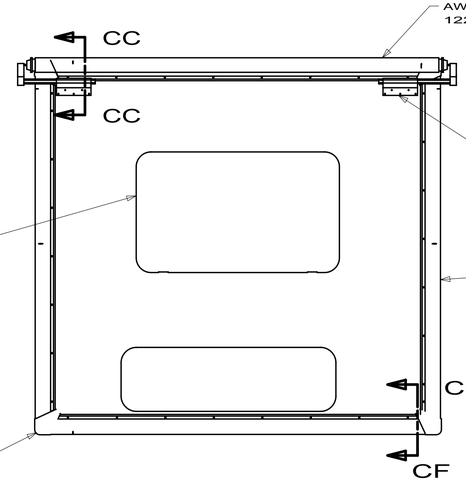

AWNING ASM
122977-12-CHT

AWNING BRACKET (2)
(SUPPLIED WITH AWNING)
SCREW
0G3910-24-170 (10)

SLUG ASM-SLIDEOUT
171774-11-XXX E26P
64V 171774-12-XXX E26P
094 171966-16-XXX D31E
13Y 094 171966-18-XXX D31E
172049-14-XXX D33C
094 172049-16-XXX D33C
13Y 094 172049-18-XXX D33C

TRIM-KIT EXTERIOR
169233-18-AA1 BLK
169233-18-AA2 WHT
SCREW
154938-05-03A (32)
154938-04-01A (24) 9
154938-04-02A (24)
INSERT
105312-01-13A BLK 8
105312-01-07A WHT
(7888)

COVER-CORNER,SLIDEOUT
156151-01-01A BLK (4)
156151-01-02A WHT (4)
CORNER KEY
160421-01-01A BLK (4)

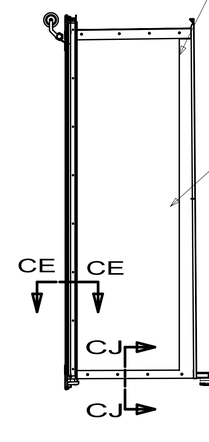

FILM
093681-39-01A (2)
(1750)
27A 92A 24C

PANEL ASM-SLIDEOUT,LH
PANEL ASM-SLIDEOUT,RH
162978-13-XXX E26P
162978-14-XXX E26P 64V
P62978-14-XXX D31E
P62978-30-XXX D33C
SCREW
000G62-08-12B (20)
SCREW
000G62-08-12B (20)

DETAIL CH

54M RAIL-FLOOR
115325-08-01A (4)
SCREW
000G39-10-12B (16)
PLYWOOD
000852-51-882 (8)
(76 X 306)
(MAY BE SCRAP)
POLYETHYLENE
115661-01-000
(1224)

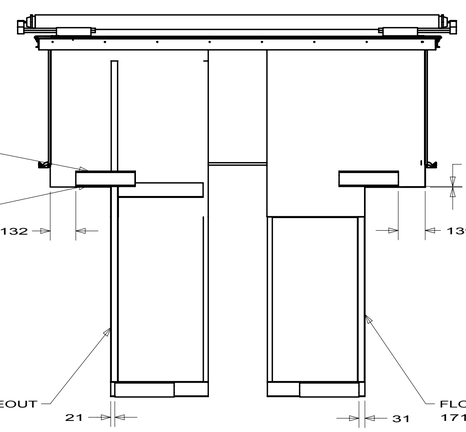

513 RAMP ASM
174758-09-XXX (4)
SCREW
000G39-10-32B (24)
SCREWS MUST BE
COUNTERSUNK 3mm
BELOW SURFACE OF
THE WOOD)
PLYWOOD
000852-51-882 (8)
(MAY BE SCRAP)

FLOOR ASM-SLIDEOUT
171734-02-XXX

FLOOR ASM-SLIDEOUT
171734-01-XXX

27A EXT FULL BODY PAINT PKG #1
92A EXT FULL BODY PAINT PKG # 2
24C EXT FULL BODY PAINT PKG # 3
54M FLOOR COVERING CARPET W/PAD
513 FLOORCOVERING-VINYL-THRU OUT

ROOM ASM-SLIDEOUT
(SEE TAB)

FIRST USED	10 E29R
DO NOT SCALE DRAWING	
TITLE:	SLIDEOUT COMPL-REAR,LH
SHEET 2	PART NO 170511 REV

4/6/2010

DWG NO 170511

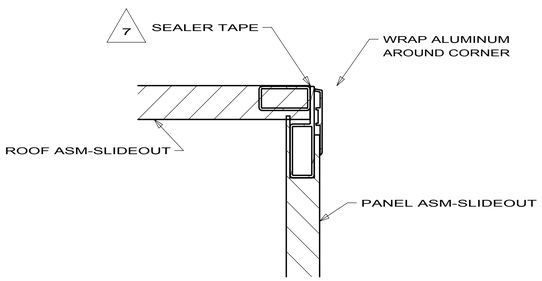

SECTION CA-CA

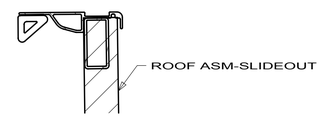

SECTION CB-CB

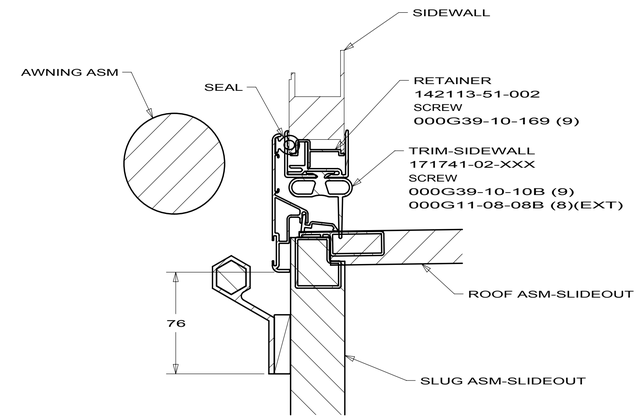

SECTION CC-CC

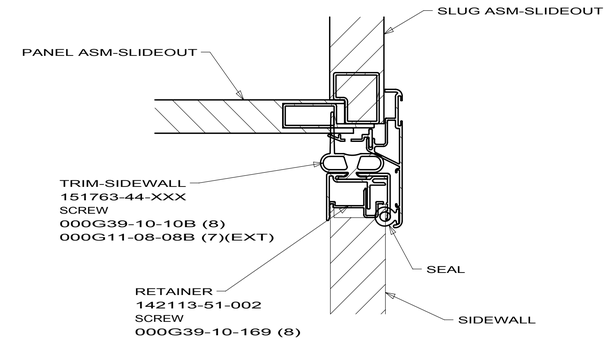

SECTION CD-CD

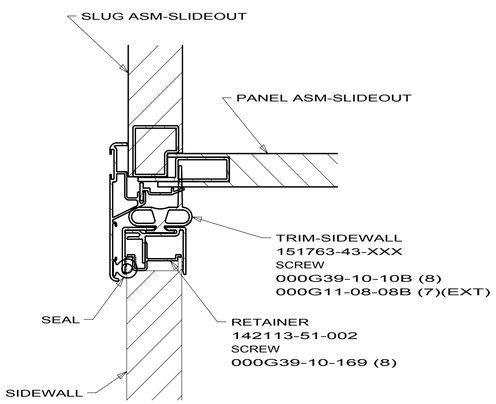

SECTION CE-CE

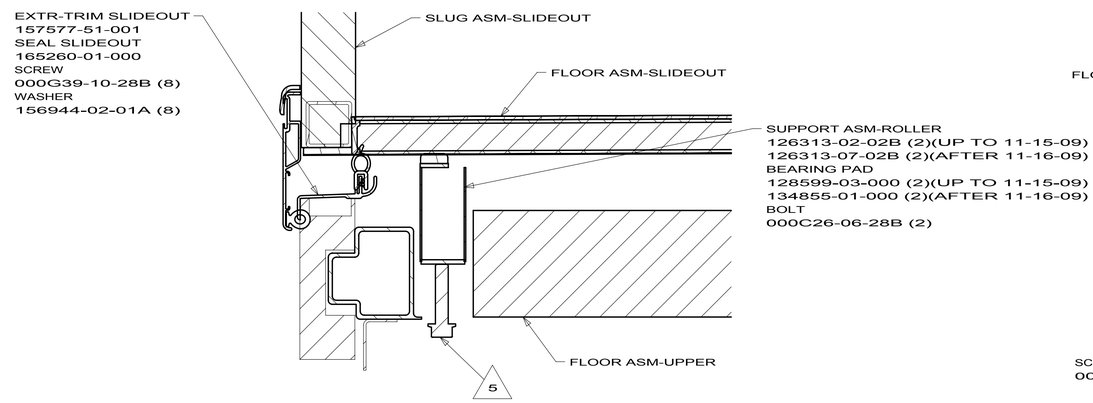

SECTION CF-CF

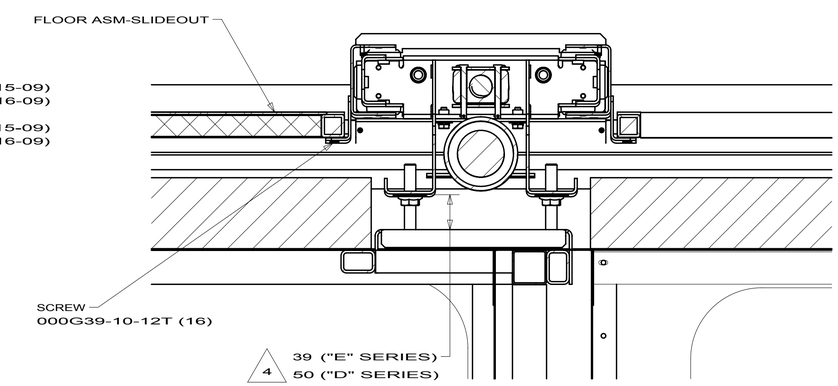

SECTION CG-CG

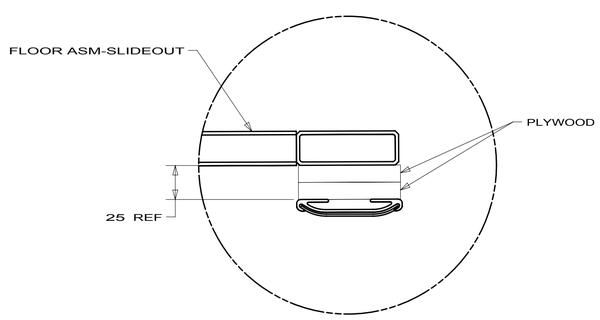

DETAIL CH

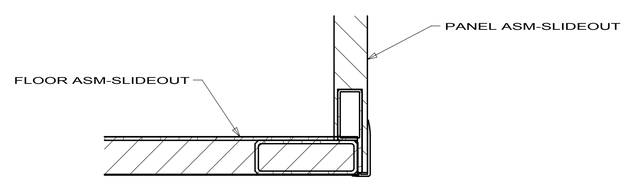

SECTION CJ-CJ

FIRST USED	10 E29R
DO NOT SCALE DRAWING	
TITLE:	SLIDEOUT COMPL-REAR,LH
SHEET 3	PART NO 170511 REV

4/6/2010

DWG NO 141162

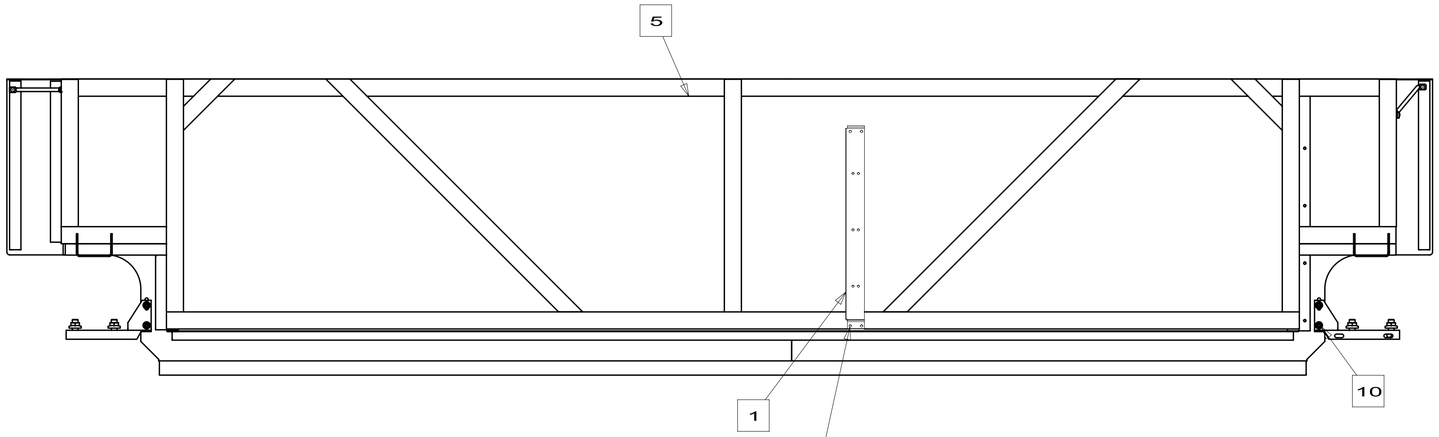

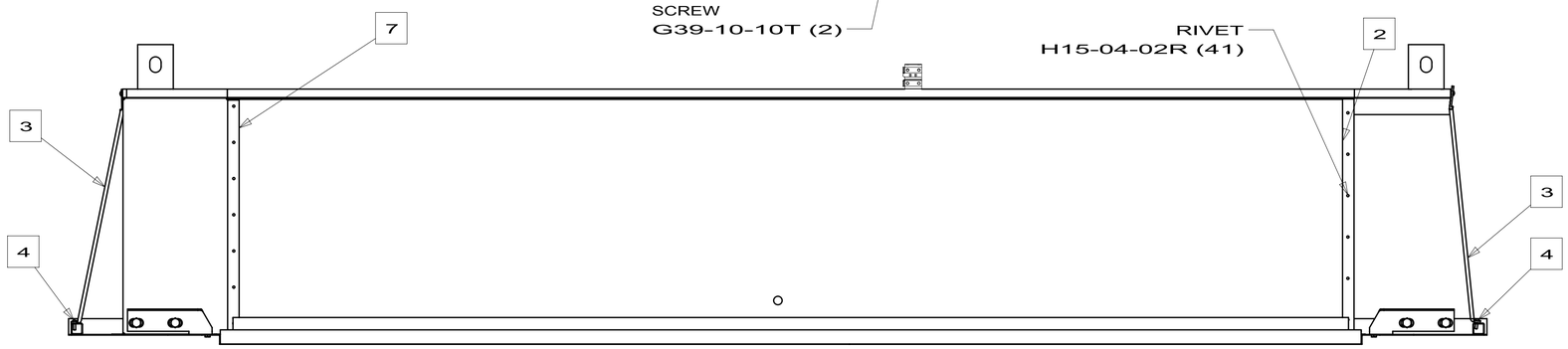

D31E
141162-18-XXX
(UP TO 12-28-09)

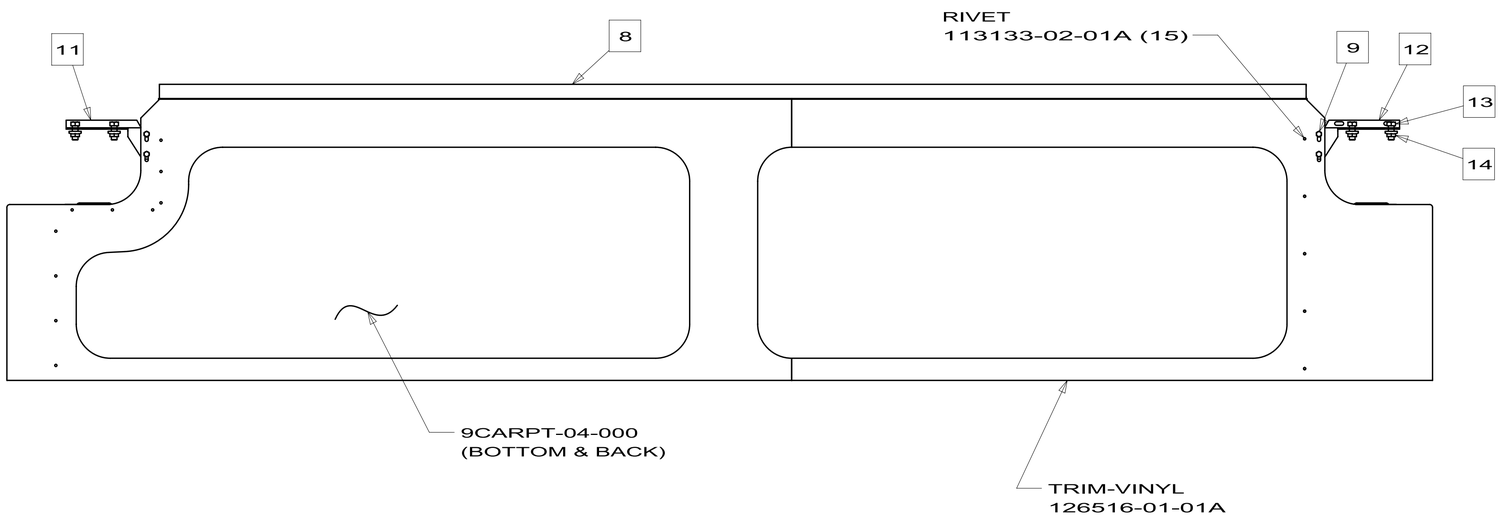

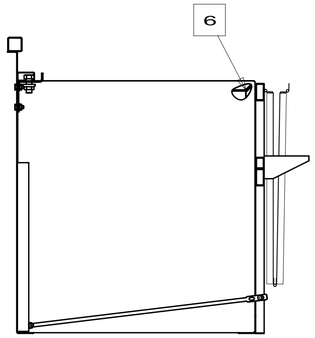

ITEM	PART NUMBER	DESCRIPTION	QTY
14	000D390800U	NUT	4
13	000C120820U	BOLT	4
12	12588805CHT	BRACKET-SLID	1
11	12588806CHT	BRACKET-SLID	1
10	000D390400U	NUT	4
9	000C120410U	BOLT	4
8	13706416CHT	SEAL PLANE A	1
7	12798020CHT	CLOSEOUT-COM	1
6	14284512000	PANEL ASM-FC	1
5	13555426XXX	SUPPORT ASM-	1
4	000G391012U	SCREW-PAN,HE	4
3	10786526CHT	ROD-SUPPORT	2
2	13555505CHT	PANEL-COMPAR	1
1	12659101CHT	CARRIER ASM-	1

FIRST USED
09 D31E

DO NOT SCALE DRAWING

TITLE:
COMPARTMENT COMPL-SLIDEOUT

SHEET 1 | PART NO 141162 | REV

4/6/2010

DWG NO 141162

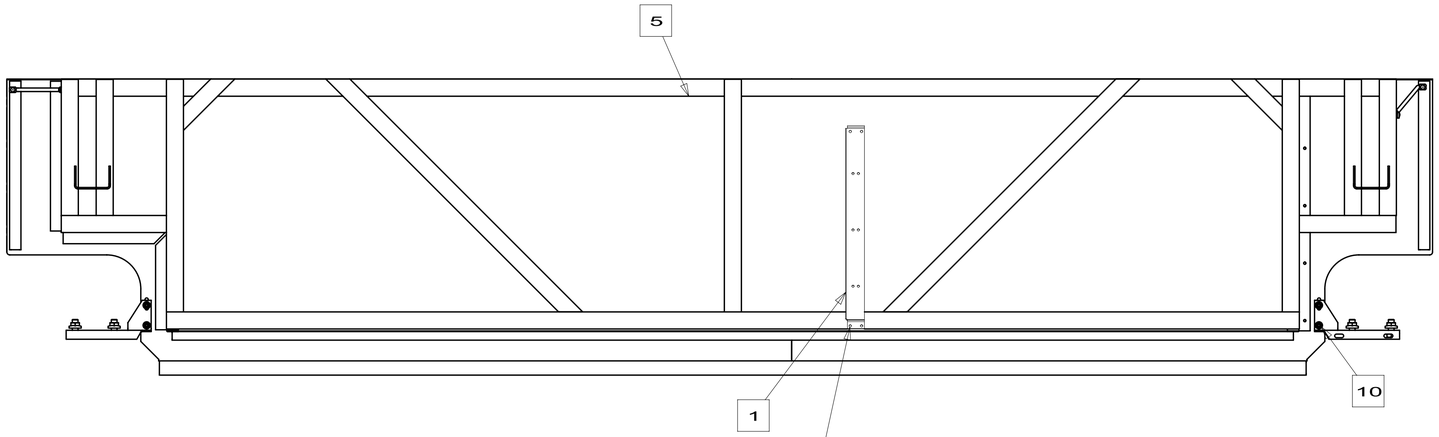

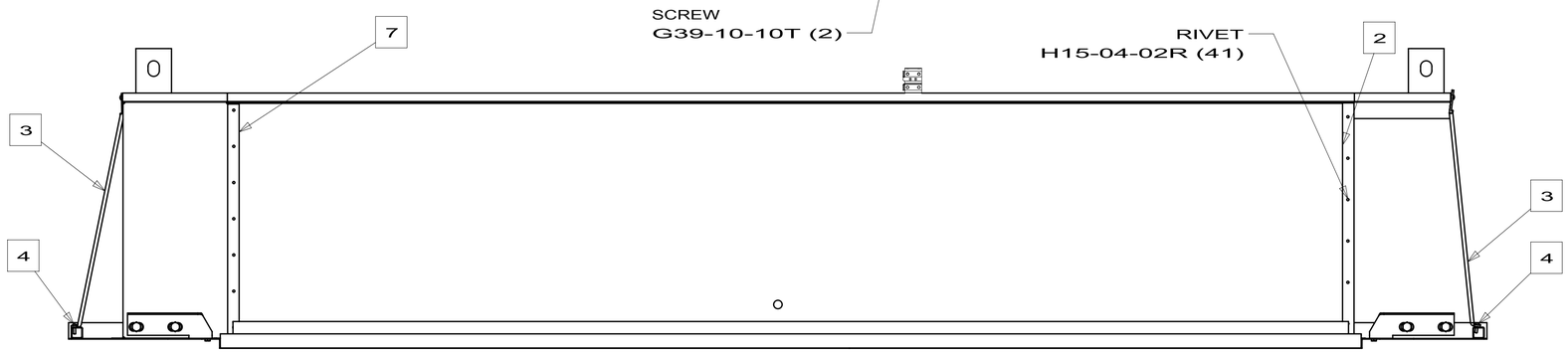

D31E
141162-19-XXX
(AFTER 12-29-09)

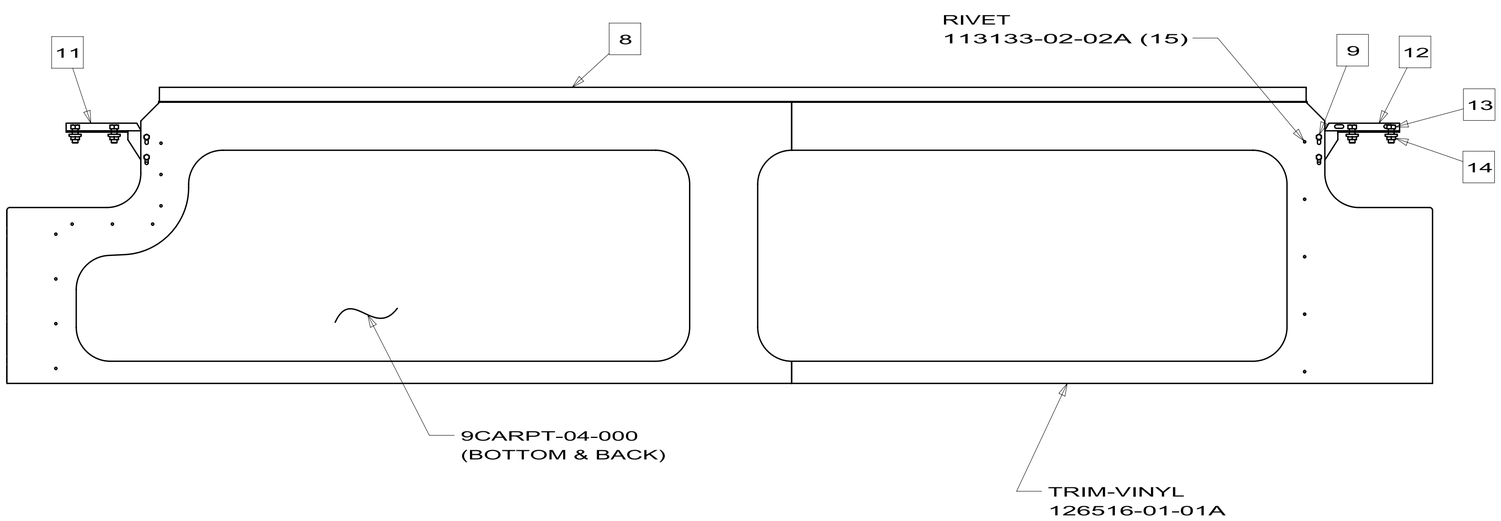

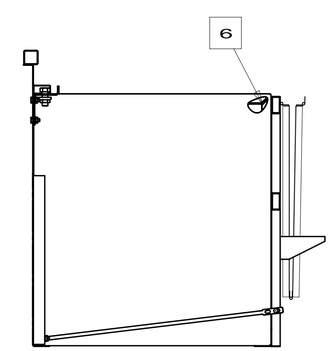

ITEM	PART NUMBER	DESCRIPTION	QTY
14	000D390800U	NUT	4
13	000C120820U	BOLT	4
12	12588805CHT	BRACKET-SLID	1
11	12588806CHT	BRACKET-SLID	1
10	000D390400U	NUT	4
9	000C120410U	BOLT	4
8	13706417CHT	SEAL PLANE A	1
7	12798031CHT	CLOSEOUT-COM	1
6	14284515000	PANEL ASM-FC	1
5	13555429XXX	SUPPORT ASM-	1
4	000G391012U	SCREW-PAN,HE	4
3	10786526CHT	ROD-SUPPORT,	2
2	13555505CHT	PANEL-COMPAR	1
1	12659101CHT	CARRIER ASM-	1

FIRST USED
09 D31E

DO NOT SCALE DRAWING

TITLE:
COMPARTMENT COMPL-SLIDEOUT

SHEET 2 | PART NO 141162 | REV

4/6/2010

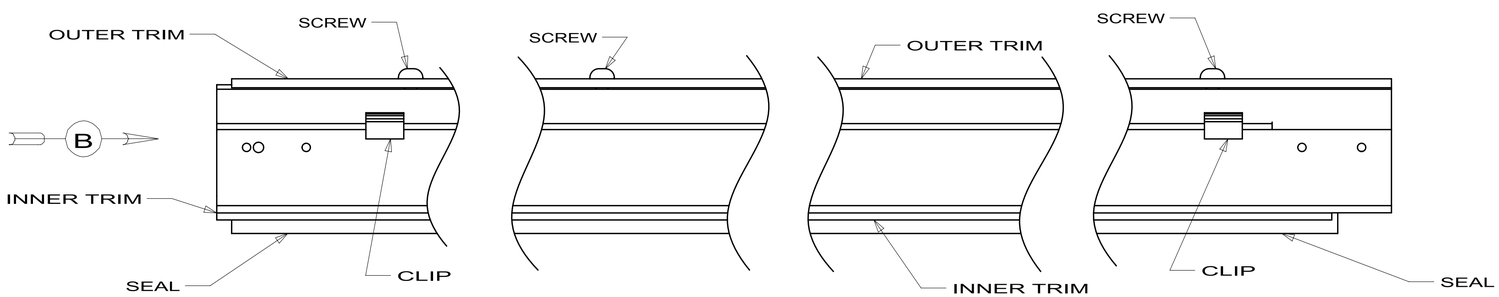

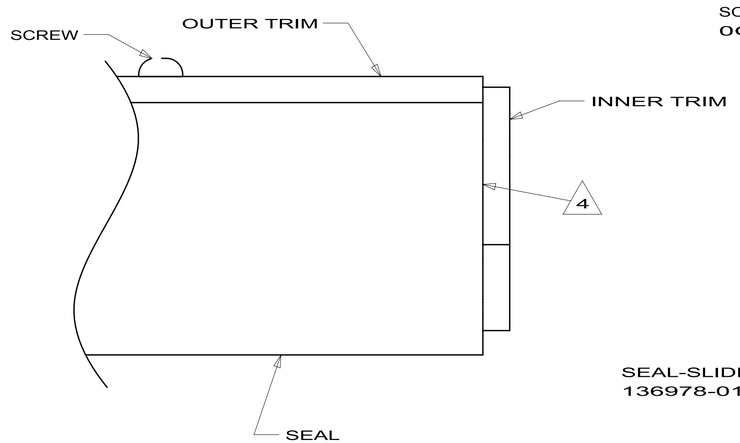

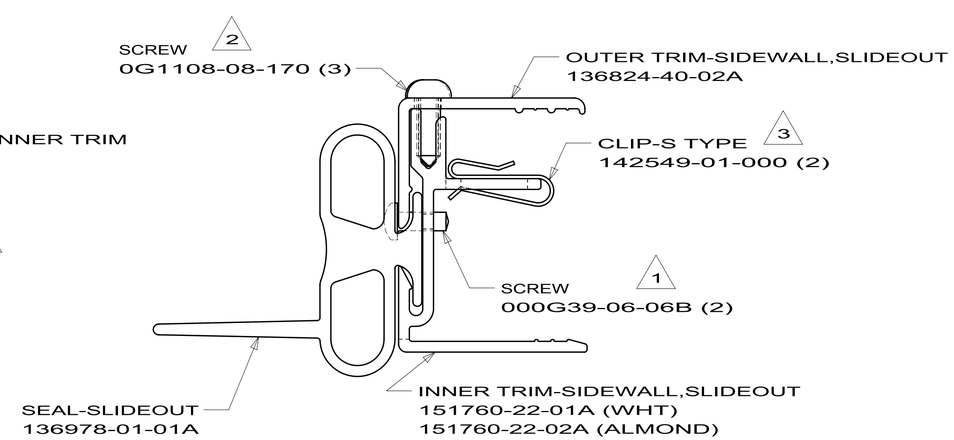

VIEW B

FABWELL SDW

4 SEAL TO BE FLUSH WITH OUTER TRIM.

3 TOLERANCE ON THE CLIP SPACING IS ± 100.0 MM.

2 APPLY SCREWS AT EACH END AND ONE IN THE MIDDLE OF THE OUTER TRIM.

1 APPLY SCREW THROUGH SEAL SO THAT IT HOLDS THE SEAL IN PLACE ON THE INNER TRIM.

NOTES:

TRIM ASM-SLIDEOUT,SIDE

1 2 151763

2/19/2010

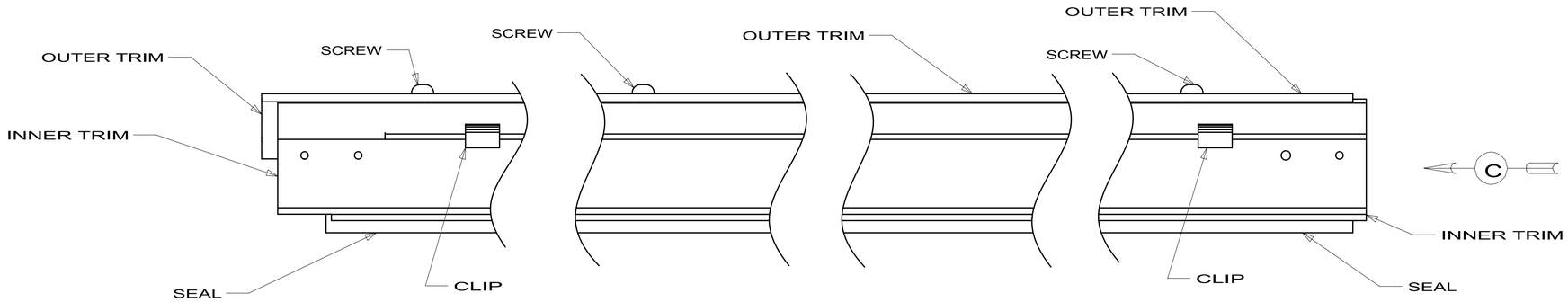

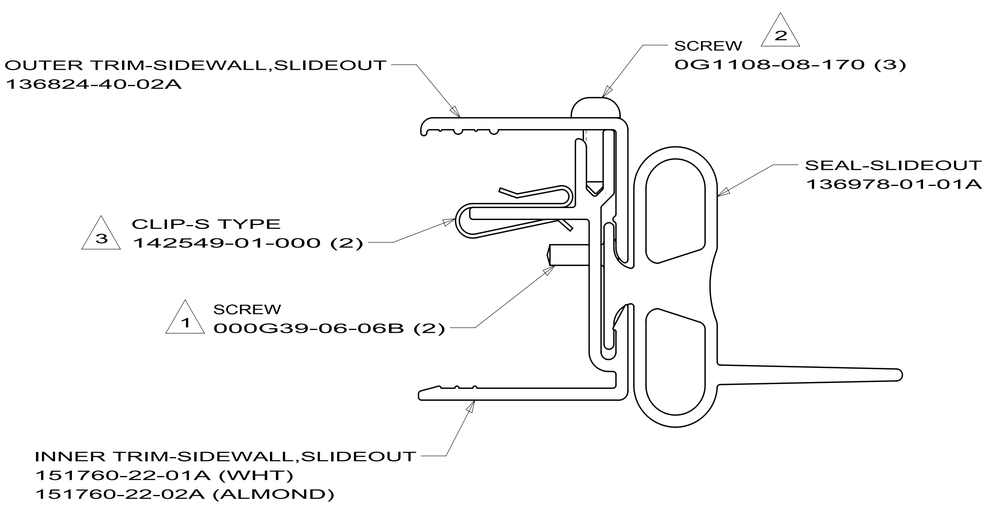

VIEW C

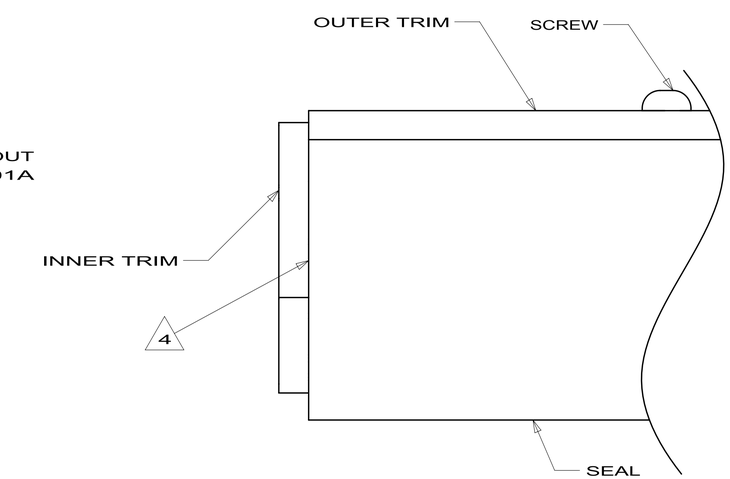

FABWELL SDW

TRIM ASM-SLIDEOUT,SIDE

2 151763

2/19/2010

DWG NO 159417

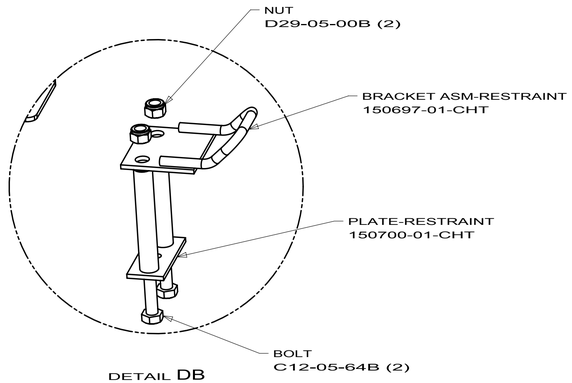

DETAIL DB

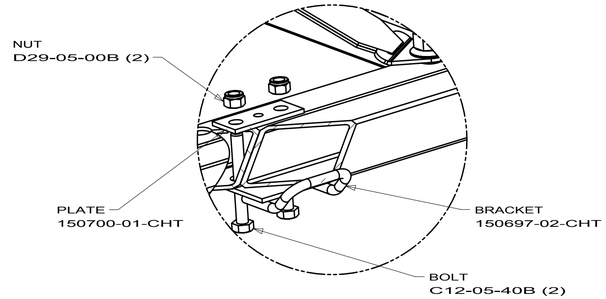

DETAIL VBC

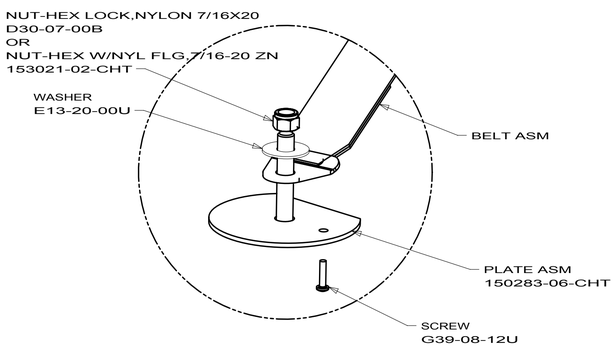

DETAIL VBD

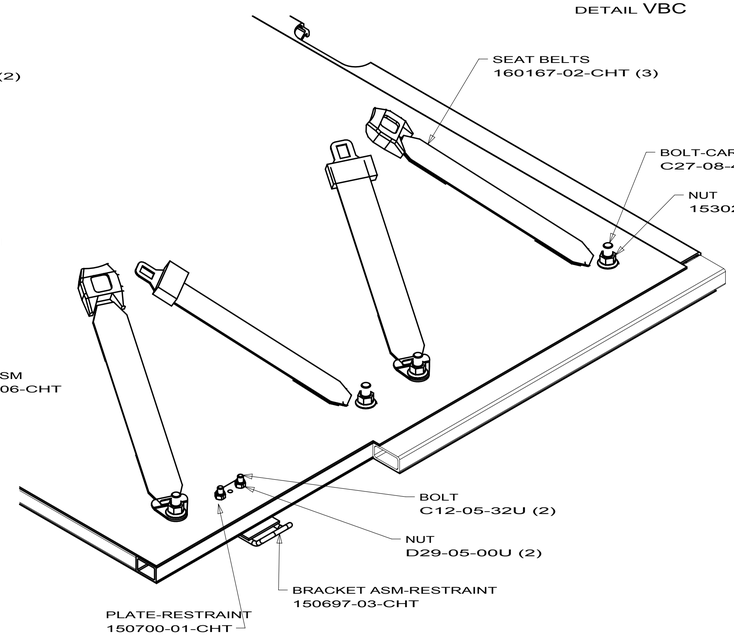

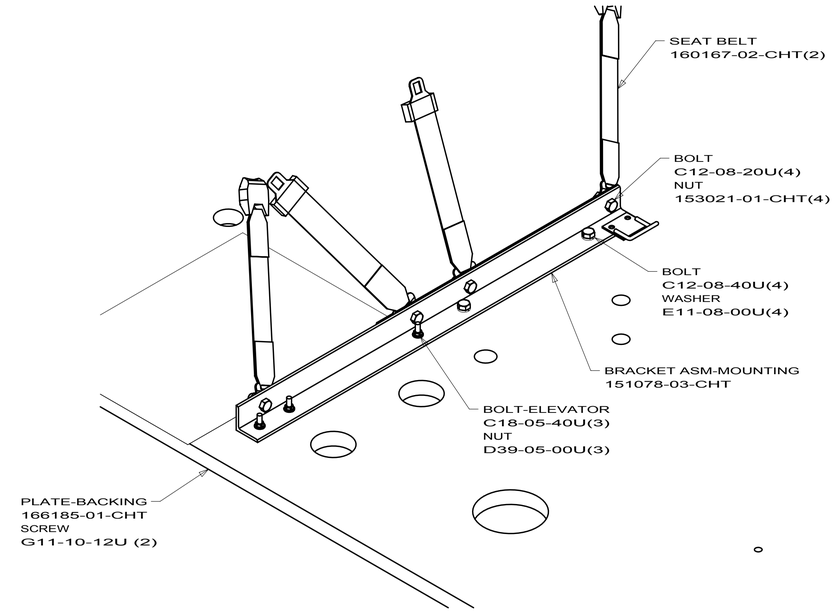

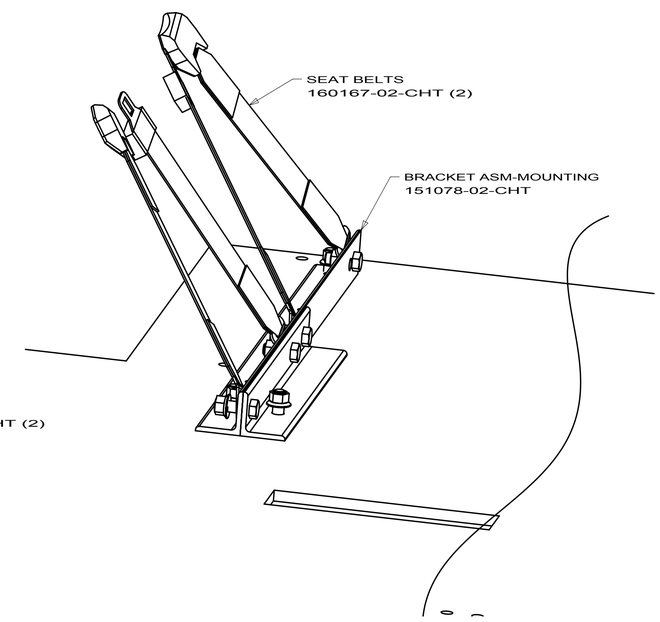

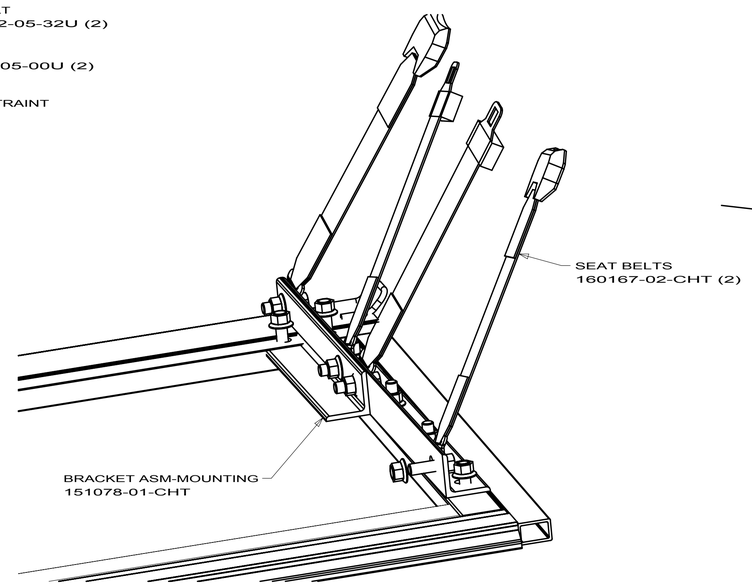

SEAT BELT
160167-01-CHT 2 X 102" BLACK
160167-02-CHT 2 X 90" BLACK

FIRST USED	07 MOTORHOMES
	DO NOT SCALE DRAWING
TITLE:	SEAT BELT INSTL
SHEET 1	PART NO 159417 REV

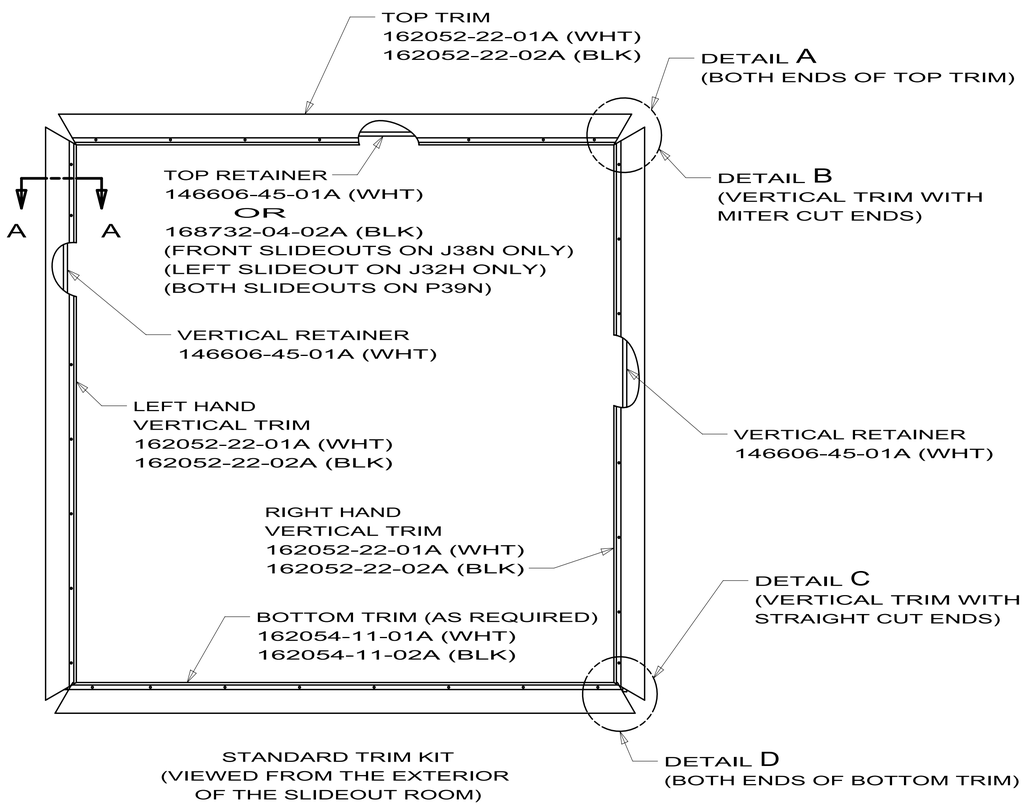

STANDARD TRIM KIT
(VIEWED FROM THE EXTERIOR
OF THE SLIDEOUT ROOM)

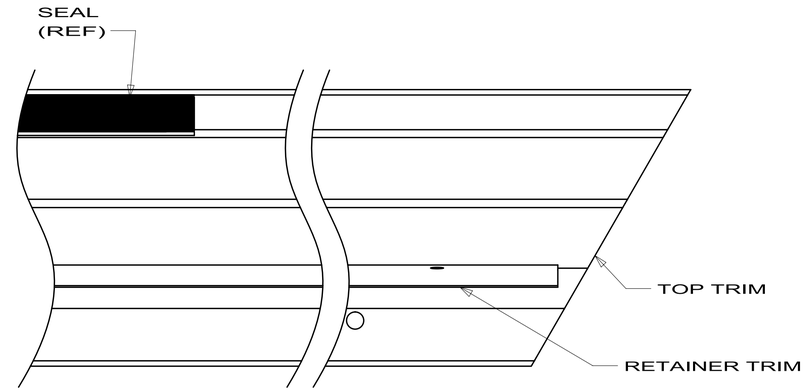

DETAIL A
(TOP TRIM)
(VIEWED FROM THE BACKSIDE OF THE TRIM)

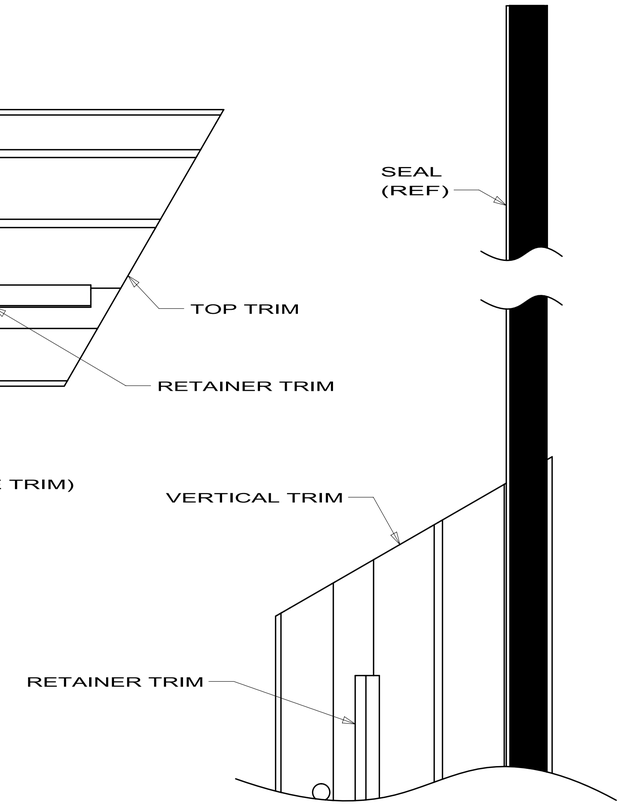

DETAIL B
(ALL MITER CUT VERTICAL TRIM)
(VIEWED FROM THE BACKSIDE OF THE TRIM)

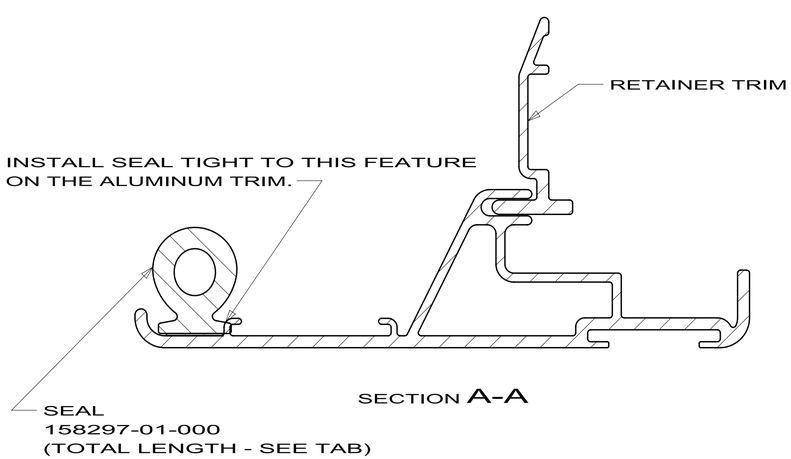

SECTION A-A

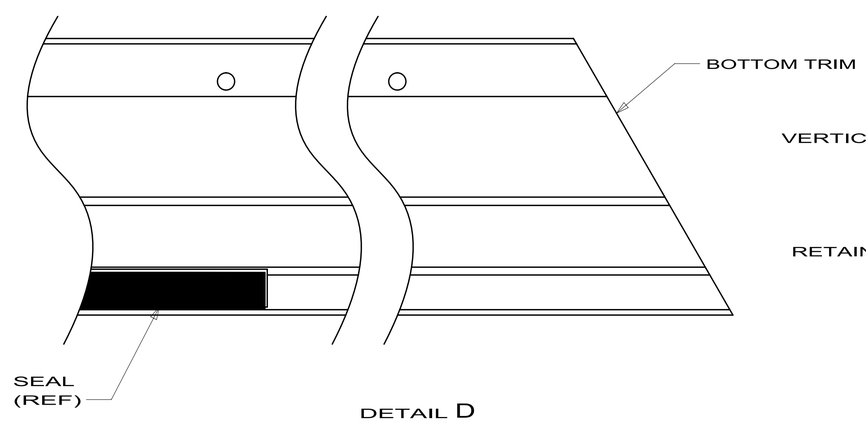

DETAIL D
(BOTTOM TRIM)
VIEWED FROM THE BACKSIDE OF THE TRIM)

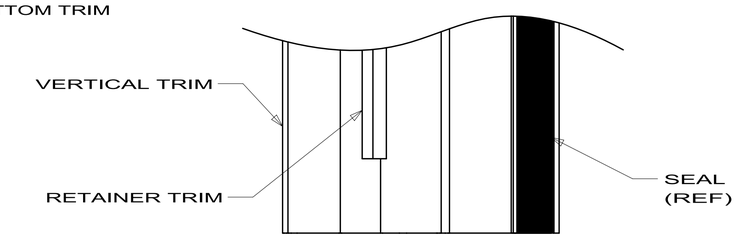

DETAIL C
(ALL STRAIGHT CUT VERTICAL TRIM)
(VIEWED FROM THE BACKSIDE OF THE TRIM)

2007 MOTORHOMES

TRIM KIT-EXTERIOR,SLIDEOUT

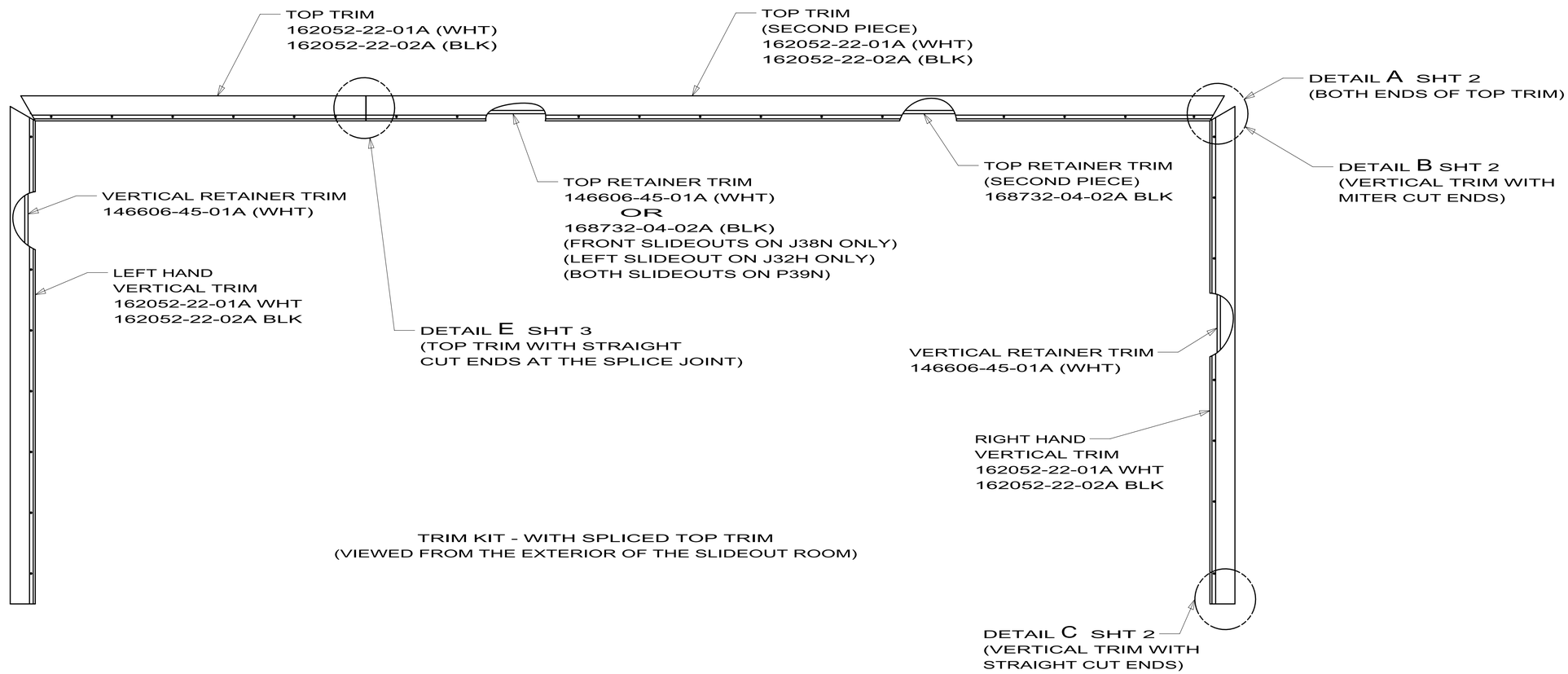

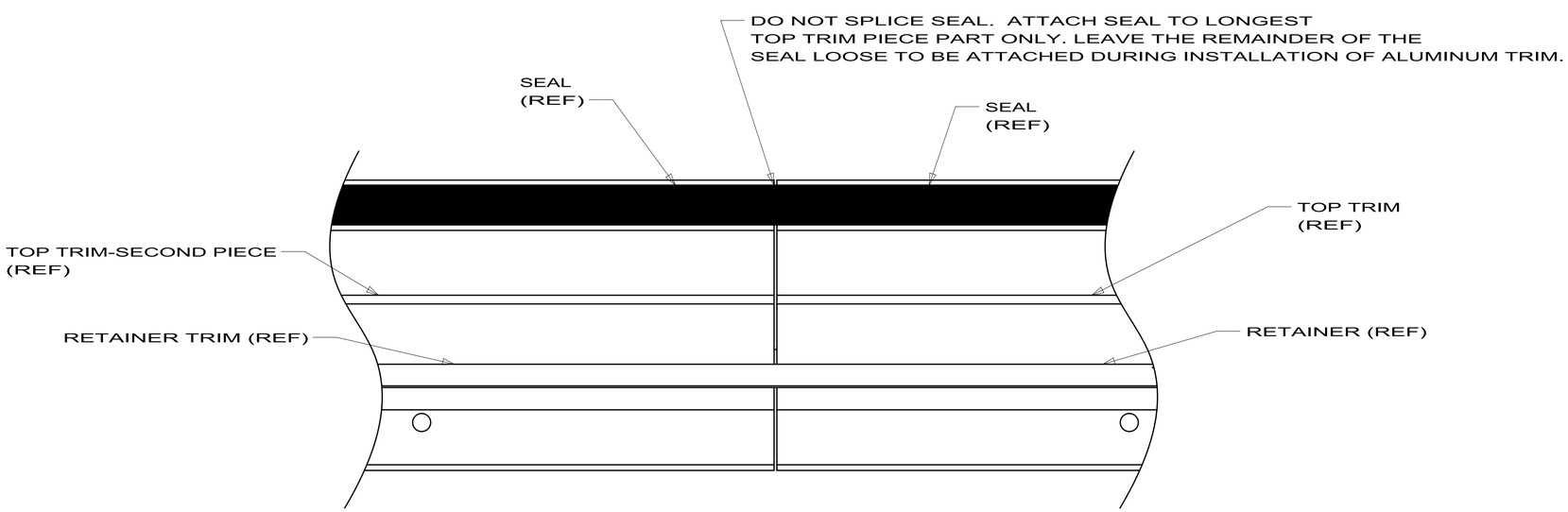

DETAIL E

(SPLICE IN TOP TRIM.)
(SHOWN FROM THE BACKSIDE OF TRIM.)

162495-01-01A, 162495-02-01A

KEY	PART NUMBER	U/M	DESCRIPTION	VENDOR NO.
	162495-01-700	EA	BUTTON-DBL. PLAS. SNAP	DP130

COPYRIGHT © 2009 WINNEBAGO INDUSTRIES INC.

KEY	PART NUMBER	U/M	DESCRIPTION	VENDOR NO.
	130294-04-700	EA	SCREW - 5/16"-18 X 1 1/2"	1202060
	131281-01-704	EA	HAIRPIN/COTTER - 3/8" SPRING	1213460
	131682-01-700	EA	ROLLER - (BEARING)	1912040
	138173-01-701	EA	POP RIVET - SS 3/16"X1/4"	1214630
	138173-01-707	EA	WEAR PUCK - PLASTIC F/DRIVE	1612523
	140457-01-701	EA	ROLLER - 1"OD X 1/2"ID	1614006
	140457-01-704	EA	SHAFT/AXLE - REAR ROLLER	7204523
	148875-01-702	EA	PIN/ROLL - 1/4" X 1"	1213701
	148875-01-703	EA	NUT - PLASTIC - 1"	1612548
	148875-01-704	EA	END CARRIER - PLASTIC - 1"	1612549
	148875-01-705	EA	MOTOR/LINEAR - SLIDE ROOM	1820111
	148875-01-707	EA	END GUIDE F/SCREW - 1"	1820450
	148875-01-708	EA	TUBE - OUTER - F/SLIDE RAM	7201200
	149165-01-701	EA	PIN/CLEVIS - 1/4" X 2"	1213204
	151027-01-700	EA	DRIVE SCREW 1" X 20"	1820402
	151027-01-701	EA	ROLL PIN - 3/16" X 1"	1213694
	151027-01-702	EA	CLEVIS PIN - 1/4" X 1 1/4"	1213202

COPYRIGHT © 2009 WINNEBAGO INDUSTRIES INC.

162834-01-000

KEY	PART NUMBER	U/M	DESCRIPTION	VENDOR NO.
	131281-01-702	EA	PIN/CLEVIS-1/4" PLATED	1213190
	131281-01-704	EA	HAIRPIN/COTTER - 3/8" SPRING	1213460
	138173-01-701	EA	POP RIVET - SS 3/16"X1/4"	1214630
	138173-01-707	EA	WEAR PUCK - PLASTIC F/DRIVE	1612523
	148875-01-700	EA	PIN/COTTER - 3/32" X 1/2"	1213520
	148875-01-703	EA	NUT - PLASTIC - 1"	1612548
	148875-01-705	EA	MOTOR/LINEAR - SLIDE ROOM	1820111
	149165-01-700	EA	BEARING - 5/8" ID	1102015
	149165-01-701	EA	PIN/CLEVIS - 1/4" X 2 7/8"	1213204
	149165-01-703	EA	SEAL/RUBBER - INNER FRAME	1612007
	149165-01-704	EA	SEAL/LOWER ROOM - “Z”	1612009
	149165-01-705	EA	DRIVE/WORM SCREW - 30"	1820400

COPYRIGHT © 2009 WINNEBAGO INDUSTRIES INC.

DWG NO 169233

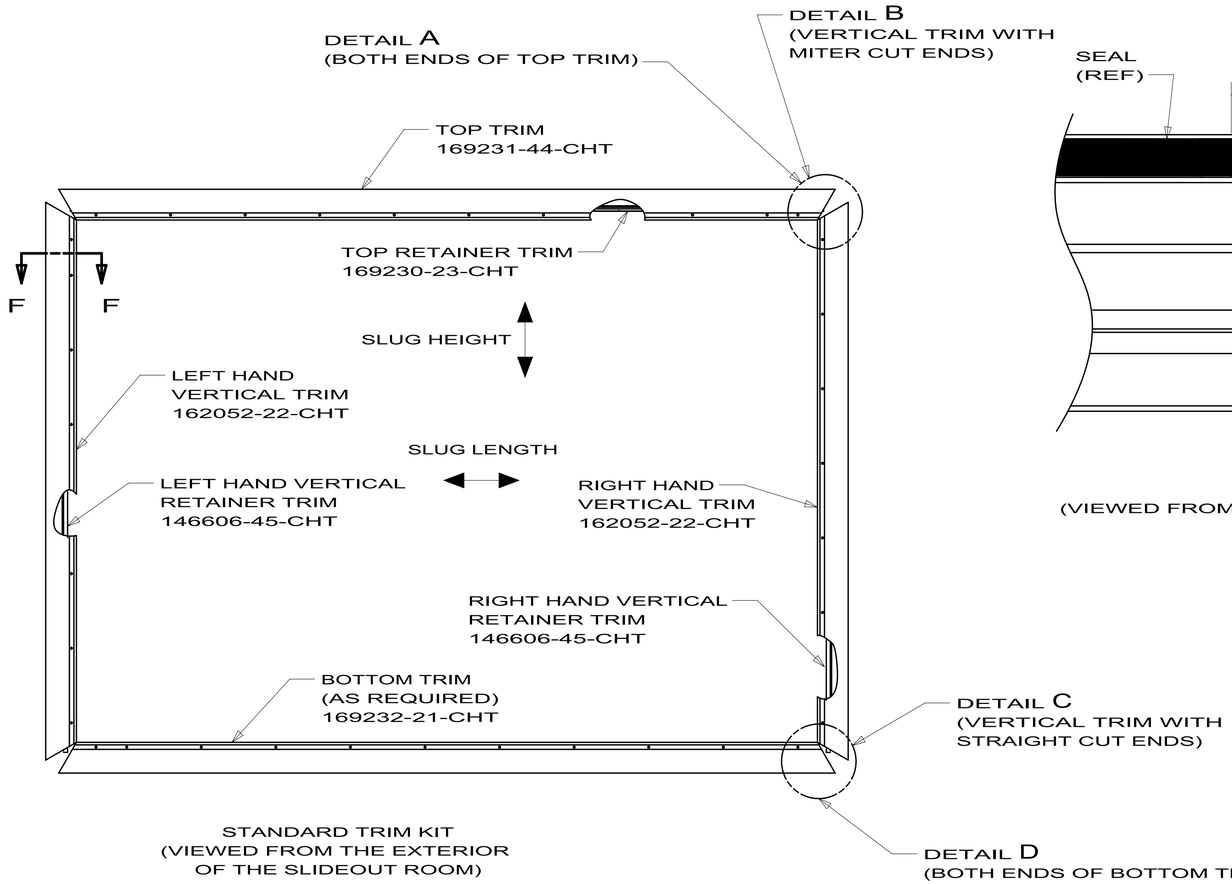

STANDARD TRIM KIT
(VIEWED FROM THE EXTERIOR
OF THE SLIDEOUT ROOM)

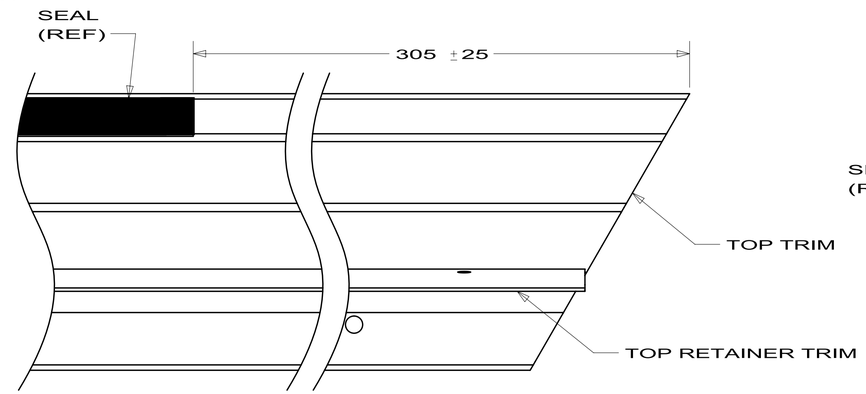

DETAIL A
(TOP TRIM)
(VIEWED FROM THE BACKSIDE OF THE TRIM)

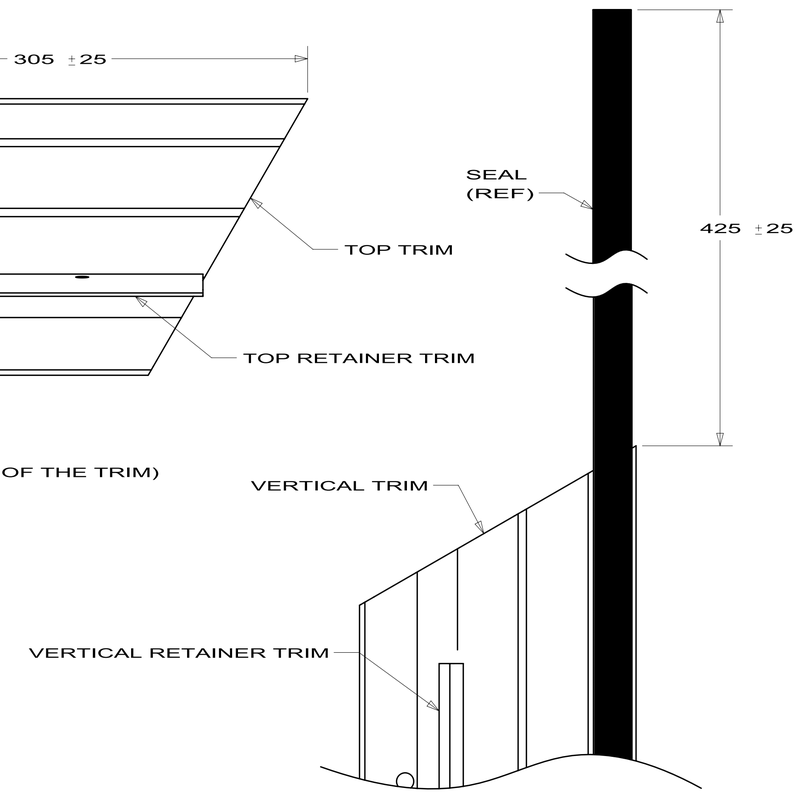

DETAIL B
(ALL MITER CUT VERTICAL TRIM)
(VIEWED FROM THE BACKSIDE OF THE TRIM)

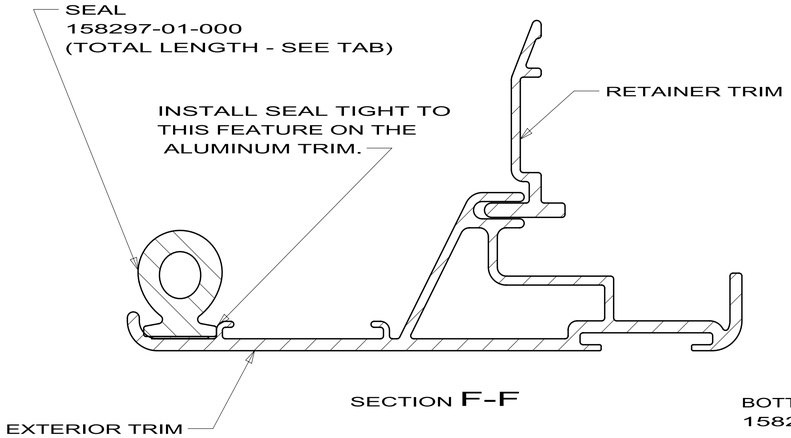

SECTION F-F

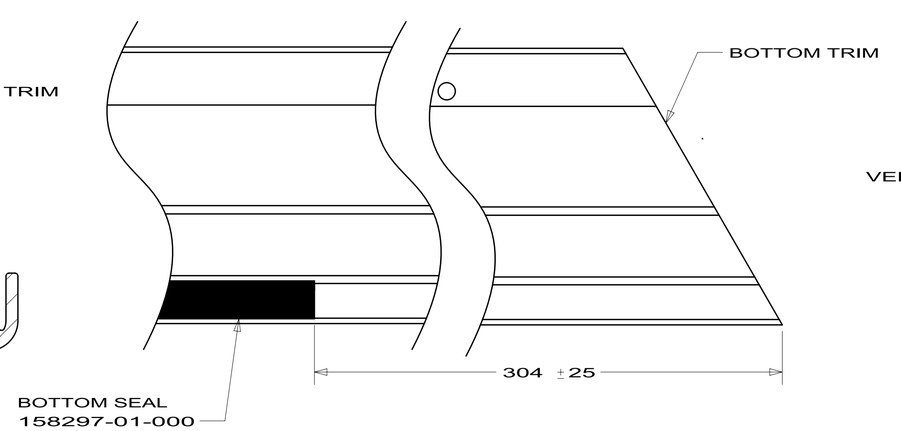

DETAIL D
(BOTTOM TRIM)
VIEWED FROM THE BACKSIDE OF THE TRIM)

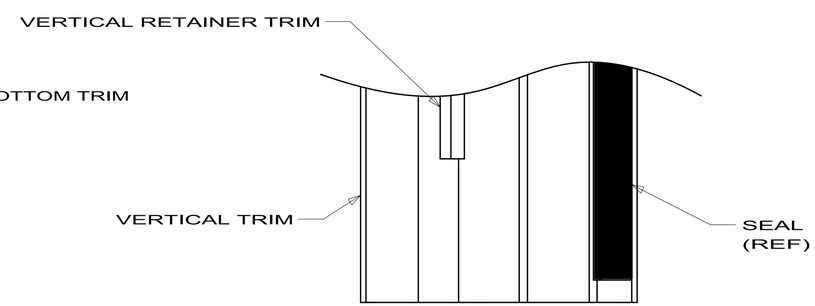

DETAIL C
(ALL STRAIGHT CUT VERTICAL TRIM)
(VIEWED FROM THE BACKSIDE OF THE TRIM)

FIRST USED	2010 MOTORHOMES
	DO NOT SCALE DRAWING
TITLE:	TRIM KIT-EXTERIOR,SLIDEOUT
SHEET 1	PART NO 169233 REV

DWG NO 169233

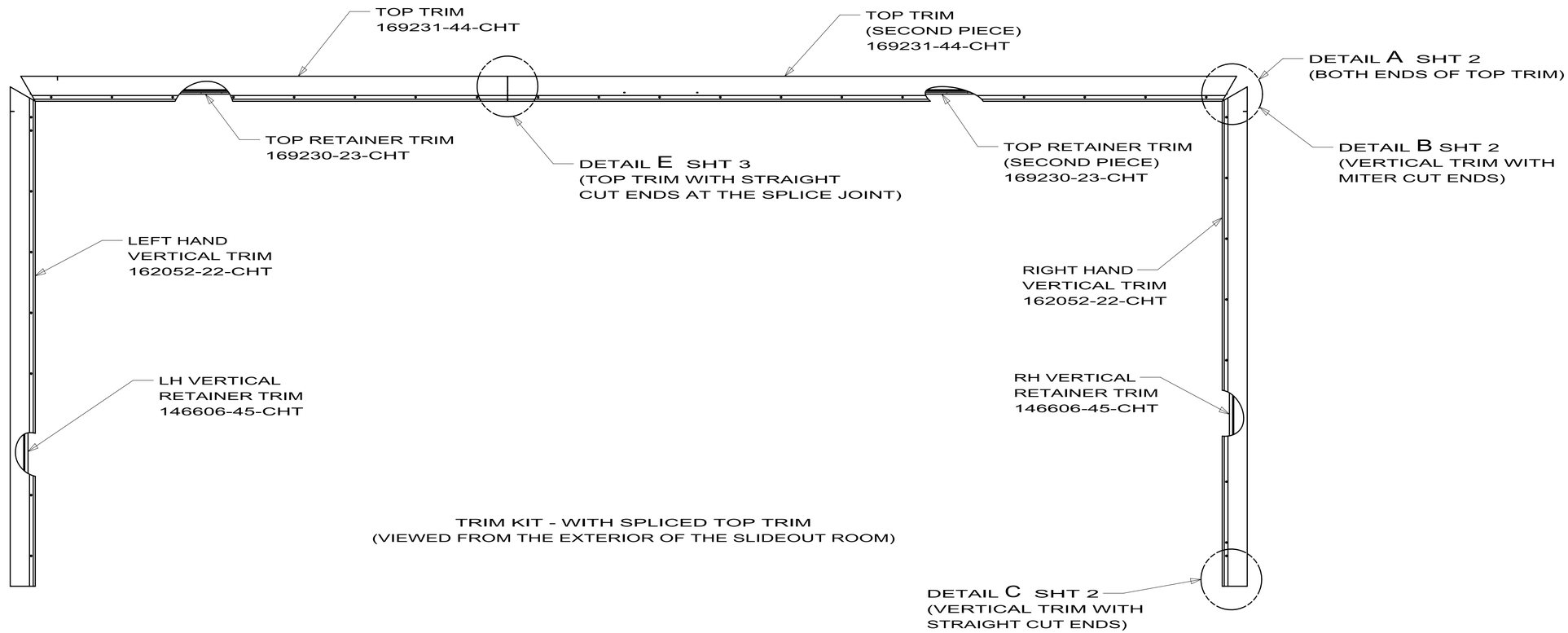

TRIM KIT - WITH SPLICED TOP TRIM
(VIEWED FROM THE EXTERIOR OF THE SLIDEOUT ROOM)

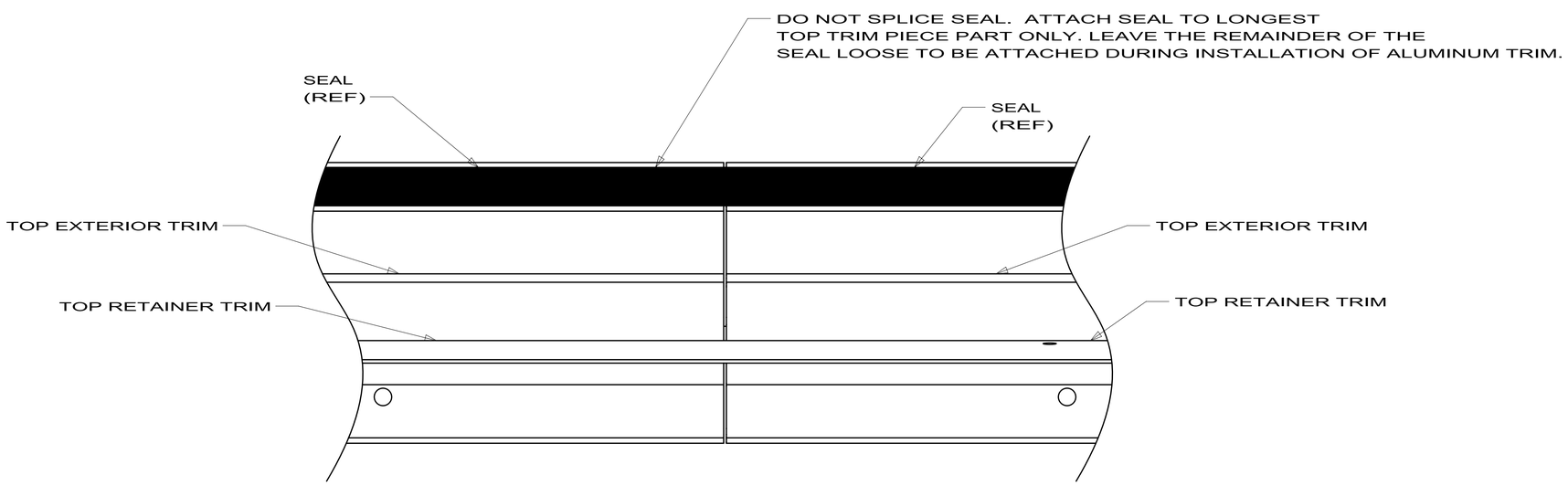

DETAIL E
(SPLICE IN TOP TRIM.)
(SHOWN FROM THE BACKSIDE OF TRIM.)

FIRST USED	2010 MOTORHOMES
	DO NOT SCALE DRAWING
TITLE:	TRIM KIT-EXTERIOR,SLIDEOUT
SHEET 4	PART NO 169233 REV

RELEASE	REV A	DATE	DWG NO 171741

REV	ZONE	REVISION RECORD	DATE	DFTR-ORIG

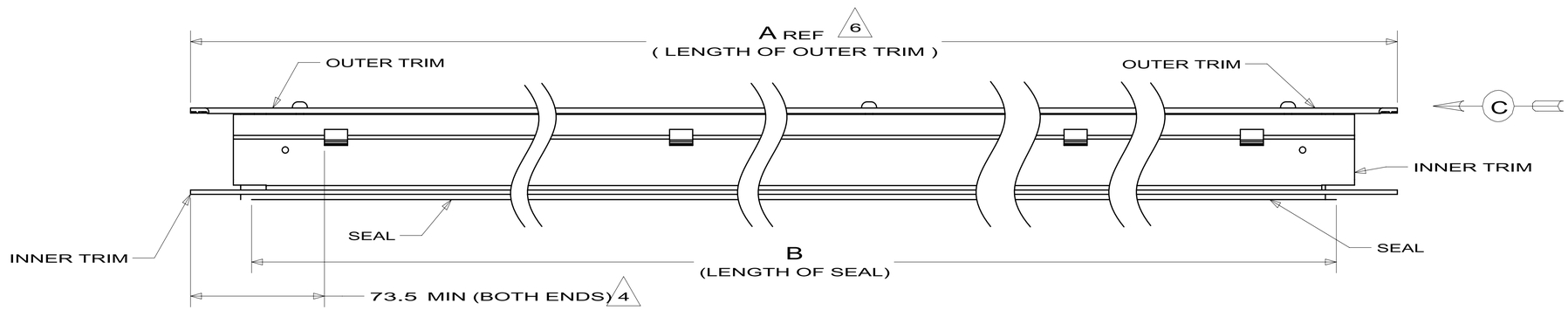

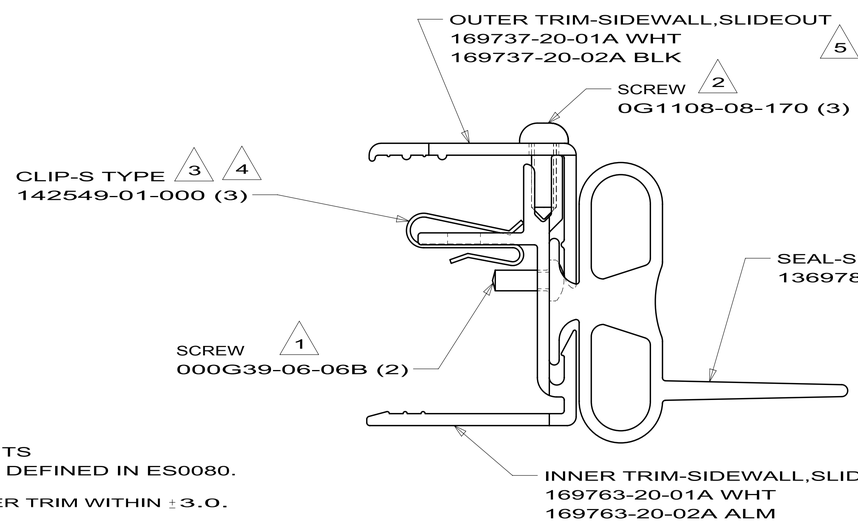

VIEW C

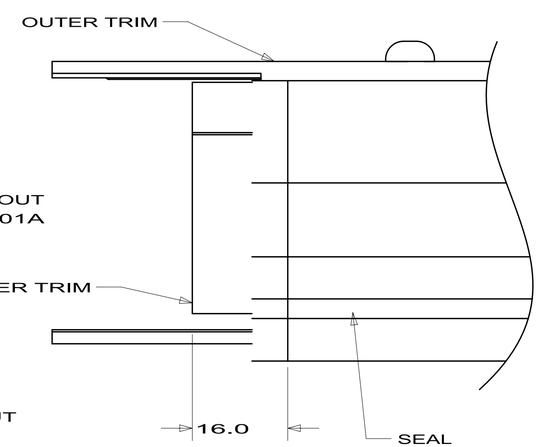

6 LENGTHS SHOULD BE IN 150 mm INCREMENTS PER STANDARD SLIDEOUT ROOM LENGTHS DEFINED IN ES0080.

5 OUTER TRIM MUST BE CENTERED ON THE INNER TRIM WITHIN ±3.0.

4 TOLERANCE ON THE CLIP SPACING IS ±100.0 MM.

3 LOCATE CLIPS AT EACH END AND SPACED EQUALLY ALONG THE INNER TRIM.

2 APPLY SCREWS AT EACH END AND ONE IN THE MIDDLE OF THE OUTER TRIM.

1 APPLY SCREW THROUGH SEAL SO THAT IT HOLDS THE SEAL IN PLACE ON THE INNER TRIM.

NOTES:

WINNEBAGO INDUSTRIES

COPYRIGHT 2010
WINNEBAGO
INDUSTRIES, INC.

DFTR	ORIG. DATE
CHKR	ALL DIMENSIONS ARE IN MILLIMETERS
P.E.	
M.E.	FIRST USED
DSNR	10 SLIDEOUTS
UNSPECIFIED TOLERANCES ARE: WHOLE DIM (X) : ; ONE-PLACE (X.X) : 1.5 ; TWO-PLACE (X.XX) : ; ANGLE :	MATERIAL:
THIRD ANGLE PROJECTION	
DO NOT SCALE DRAWING	REFER TO ES0018 FOR FASTENER TIGHTENING GUIDELINES

TITLE:
TRIM ASM-SLIDEOUT,TOP,SGL WIPE

SHEET 1 OF 1	PART NO 171741	REV

REF:

2/26/2010

DWG NO	SLIDEOUT SLUG SIZE △2	TOP TRIM	TOP TRIM (SECOND PIECE)	RH VERT TRIM	LH VERT TRIM	LH VERT TRIM (SECOND PIECE)	SUPPORT-ASM	SUPPORT ASM (SECOND PIECE)	TOTAL SEAL LENGTH △3
174648-01	1907 X 3915	139624-09-CHT	–	139624-01-CHT	139624-02-CHT	–	125466-01-CHT	–	7960
174648-02	1788 X 1935	169060-02-CHT	–	139624-51-CHT	139624-50-CHT	–	–	–	5750
174648-03	1907 X 5535	169060-28-CHT	169060-21-CHT	139624-01-CHT	139624-02-CHT	–	125466-22-CHT	155339-17-CHT	9590
174648-04	1886 X 2835	169329-08-CHT	–	139624-18-CHT	139624-19-CHT	–	–	–	6850
174648-05	1907 X 1935	169060-02-CHT	–	139624-01-CHT	139624-02-CHT	–	–	–	5990
174648-06	1886 X 5535	169329-28-CHT	169329-21-CHT	139624-18-CHT	139624-19-CHT	–	–	–	9550
174648-07	1801 X 2535	139624-23-CHT	–	139624-01-CHT	139624-02-CHT	–	125466-23-CHT	–	6380
174648-08	1804 X 2939	139624-66-CHT	–	139624-01-CHT	139624-02-CHT	–	125466-13-CHT	–	6790
174648-09	1801 X 3585	169060-13-CHT	–	139624-01-CHT	139624-02-CHT	–	125466-02-CHT	–	7430
174648-10	1635 X 2226	139624-82-CHT	–	139624-37-CHT	139624-38-CHT	–	–	–	5740
174648-11	2057 X 3915	139624-09-CHT	–	139624-47-CHT	139624-46-CHT	–	–	–	8270
174648-12	1897 X 7263	139624-65-CHT	139624-64-CHT	139624-25-CHT	139624-26-CHT	–	125466-11-CHT	125468-10-CHT	11300
174648-13	1948 X 3585	139624-04-CHT	–	139624-41-CHT	139624-42-CHT	–	–	–	7720
174648-14	2057 X 2985	169329-09-CHT	–	139624-45-CHT	139624-44-CHT	–	–	–	7340
174648-15	1967 X 7485	139624-92-CHT	171623-02-CHT	139624-99-CHT	171623-01-CHT	–	–	–	11660
174648-16	1635 X 2116	139624-84-CHT	–	139624-37-CHT	139624-38-CHT	–	–	–	5630
174648-17	2057 X 3585	139624-06-CHT	–	139624-59-CHT	139624-60-CHT	–	125466-02-CHT	–	7940
174648-18	1948 X 2116	139624-84-CHT	–	139624-41-CHT	139624-42-CHT	–	–	–	6250
174648-19	2057 X 4213	153113-03-CHT	–	139624-45-CHT	139624-44-CHT	–	–	–	8570
174648-20	2057 X 3270	153113-05-CHT	–	139624-45-CHT	139624-44-CHT	–	–	–	7630
174648-21	1948 X 2176	139624-90-CHT	–	139624-41-CHT	139624-42-CHT	–	–	–	6310
174648-22	2057 X 1821	139624-86-CHT	–	139624-41-CHT	139624-42-CHT	–	–	–	6180
174648-23	2057 x 4561	153113-11-CHT	–	139624-45-CHT	139624-44-CHT	–	–	–	8920
174648-24	2057 x 3780	153113-10-CHT	–	139624-45-CHT	139624-44-CHT	–	–	–	8140
174648-25	2057 x 3735	169329-17-CHT	–	139624-45-CHT	139624-44-CHT	–	–	–	8090
174648-26	2057 x 4635	169060-20-CHT	–	139624-41-CHT	139624-42-CHT	–	125466-02-CHT	–	8990
174648-27	1635 x 1935	169060-02-CHT	–	139624-37-CHT	139624-38-CHT	–	–	–	5450
174648-28	2057 x 6735	169329-36-CHT	169329-21-CHT	139624-45-CHT	139624-44-CHT	–	–	–	11090
174648-29	2057 x 4935	169329-24-CHT	169329-21-CHT	139624-45-CHT	139624-44-CHT	–	–	–	9290
174648-30	2057 x 3850	169060-15-CHT	–	139624-47-CHT	139624-46-CHT	–	125466-18-CHT	–	8200
174648-31	1978 x 7785	169329-36-CHT	169329-22-CHT	139624-94-CHT	139624-93-CHT	–	169689-02-CHT	169689-01-CHT	11980
174648-32	1801 x 2235	169060-04-CHT	–	139624-51-CHT	139624-50-CHT	–	–	–	6080
174648-33	2057 x 4185	169060-17-CHT	–	139624-47-CHT	139624-80-CHT	139624-81-CHT	125466-19-CHT	–	8540
174648-34	2057 x 4935	169060-24-CHT	169060-21-CHT	139624-47-CHT	139624-46-CHT	–	169719-01-CHT	–	9290
174648-35	2057 x 3735	169060-14-CHT	–	139624-47-CHT	139624-46-CHT	–	125466-20-CHT	–	8090
174648-36	2057 x 4035	169060-16-CHT	–	139624-47-CHT	139624-46-CHT	–	125466-21-CHT	–	8390
174648-37	2057 x 4935	169329-24-CHT	169329-21-CHT	139624-45-CHT	139624-44-CHT	–	169689-03-CHT	–	9290
174648-38	1801 x 1935	169060-02-CHT	–	139624-25-CHT	139624-26-CHT	–	–	–	5780
174648-39	2057 x 4335	169060-18-CHT	–	139624-41-CHT	139624-42-CHT	–	125466-26-CHT	–	8690
174648-40	2057 x 5085	169329-25-CHT	169329-21-CHT	139624-45-CHT	139624-44-CHT	–	–	–	9440
174648-41	1718 x 2583	139624-73-CHT	–	139624-75-CHT	139624-74-CHT	–	–	–	6260
174648-42	1907 x 3435	139624-95-CHT	–	139624-25-CHT	139624-26-CHT	–	125466-24-CHT	–	7490
174648-43	1908 x 1590	139624-72-CHT	–	139624-25-CHT	139624-26-CHT	–	–	–	5650
174648-44	1907 x 3925	139624-91-CHT	–	139624-25-CHT	139624-26-CHT	–	–	–	7980
174648-45	1804 x 2566	139624-23-CHT	–	139624-01-CHT	139624-02-CHT	–	125466-09-CHT	–	6420
174648-46	1718 x 3495	139624-07-CHT	–	139624-13-CHT	139624-14-CHT	–	125466-03-CHT	–	7170
174648-47	1475 x 1926	139624-04-CHT	–	139624-20-CHT	139624-21-CHT	–	–	–	5120
174648-48	1804 x 2535	169060-06-CHT	–	139624-01-CHT	139624-02-CHT	–	–	–	6390
174648-49	1804 x 3495	139624-07-CHT	–	139624-01-CHT	139624-02-CHT	–	125466-03-CHT	–	7350
174648-50	1804 x 1926	139624-04-CHT	–	139624-01-CHT	139624-02-CHT	–	–	–	5780
174648-51	1718 x 1865	139624-35-CHT	–	139624-13-CHT	139624-14-CHT	–	–	–	5540

△3. TOTAL SEAL LENGTH = (SLUG HEIGHT X 2) + SLUG LENGTH + 240mm

△2. SLIDEOUT SLUG SIZE IS MEASURED TO THE SURFACE OF THE ALUMINUM TUBES AND LISTED BY HEIGHT X LENGTH.

1. TRIM VIEWED FROM THE INSIDE OF THE SLIDEOUT ROOM UNLESS NOTED.

NOTES:

RELEASE	REV A	DATE	DWG NO 174648

REV	ZONE	REVISION RECORD	DATE	DFTR-ORIG

WINNEBAGO INDUSTRIES

COPYRIGHT 2009
WINNEBAGO
INDUSTRIES, INC.

DFTR | ORIG. DATE
CHKR
P.E.
M.E.
DSNR

ALL DIMENSIONS ARE IN MILLIMETERS

FIRST USED: 2010 MOTORHOMES

UNSPECIFIED TOLERANCES ARE:
WHOLE DIM (X) : 3
ONE-PLACE (X.X) : 1.5
TWO-PLACE (X.XX) : 0.50
ANGLE : 1°

MATERIAL:

THIRD ANGLE PROJECTION

DO NOT SCALE DRAWING

TITLE: TRIM KIT-INTERIOR,SLIDEOUT

SHEET 1 OF 4 | PART NO 174648 | REV

REF:

10/15/2009

DWG NO 174648

DWG NO	SLIDEOUT SLUG SIZE 2	TOP TRIM	TOP TRIM (SECOND PIECE)	RH VERT TRIM	LH VERT TRIM	LH VERT TRIM (SECOND PIECE)	SUPPORT-ASM	SUPPORT ASM (SECOND PIECE)	TOTAL SEAL LENGTH 3
174648-52	1788 x 1926	139624-04-CHT	–	139624-25-CHT	139624-26-CHT	–	–	–	5750
174648-53	1804 x 1865	139624-35-CHT	–	139624-01-CHT	139624-02-CHT	–	–	–	5720
174648-54	1922 x 3495	139624-07-CHT	–	139624-01-CHT	139624-02-CHT	–	125466-03-CHT	–	7580
174648-55	1718 x 3495	139624-07-CHT	–	139624-18-CHT	139624-19-CHT	–	125466-03-CHT	–	7170
174648-56	1718 x 2167	139624-32-CHT	–	139624-13-CHT	139624-14-CHT	–	–	–	5850
174648-57	1428 x 1782	139624-76-CHT	–	139624-83-CHT	139624-78-CHT	–	–	–	4880
174648-58	1718 x 2583	139624-28-CHT	–	139624-13-CHT	139624-14-CHT	–	125466-17-CHT	–	6260
174648-59	1718 x 1828	139624-79-CHT	–	139624-13-CHT	139624-14-CHT	–	–	–	5510
174648-60	1428 x 1782	139624-76-CHT	–	139624-77-CHT	139624-78-CHT	–	–	–	4880
174648-61	1635 x 2085	169060-03-CHT	–	139624-37-CHT	139624-38-CHT	–	–	–	5595
174648-62	1804 x 2805	139264-27-CHT	–	139624-01-CHT	139624-02-CHT	–	125466-08-CHT	–	6660
174648-63	1907 x 3585	139624-06-CHT	–	139624-01-CHT	139624-02-CHT	–	125466-02-CHT	–	7640
174648-64	2057 x 2835	169329-08-CHT	–	139624-45-CHT	139624-44-CHT	–	–	–	7190
174648-65	1978 x 7185	169060-39-CHT	169060-21-CHT	139624-94-CHT	139624-93-CHT	–	125466-11-CHT	–	11380
174648-66	1907 x 2685	169060-07-CHT	–	139624-25-CHT	139624-26-CHT	–	–	–	6740
174648-67	1801 x 2685	169060-07-CHT	–	139624-01-CHT	139624-02-CHT	–	125466-25-CHT	–	6530
174648-68	1801 x 1935	169060-02-CHT	–	139624-01-CHT	139624-02-CHT	–	–	–	5777
174648-69	1935 x 1935	169060-02-CHT	–	171623-05-CHT	171623-04-CHT	–	–	–	6045
174648-70	1417 x 1935	169060-03-CHT	–	171623-09-CHT	171623-10-CHT	–	–	–	5010
174648-71	1723 x 2235	169060-04-CHT	–	171623-11-CHT	171623-12-CHT	–	–	–	5920
174648-72	1723 x 1935	169060-02-CHT	–	171623-11-CHT	171623-12-CHT	–	–	–	5620
174648-73	1688 x 3885	169060-15-CHT	–	139624-96-CHT	139624-97-CHT	–	125466-18-CHT	–	7500
174648-74	1688 x 1420	139624-98-CHT	–	139624-96-CHT	139624-97-CHT	–	–	–	5045
174648-75	1978 x 7185	139624-64-CHT	171623-08-CHT	171623-07-CHT	171623-06-CHT	–	125468-10-CHT	125466-11-CHT	11380
174648-76	1978 x 7485	139624-92-CHT	171623-02-CHT	171623-07-CHT	171623-06-CHT	–	–	–	11680

FIRST USED
2010 MOTORHOMES

DO NOT SCALE DRAWING

TITLE:
TRIM KIT-INTERIOR,SLIDEOUT

SHEET 2 | PART NO. 174648 | REV

10/15/2009

DWG NO 174648

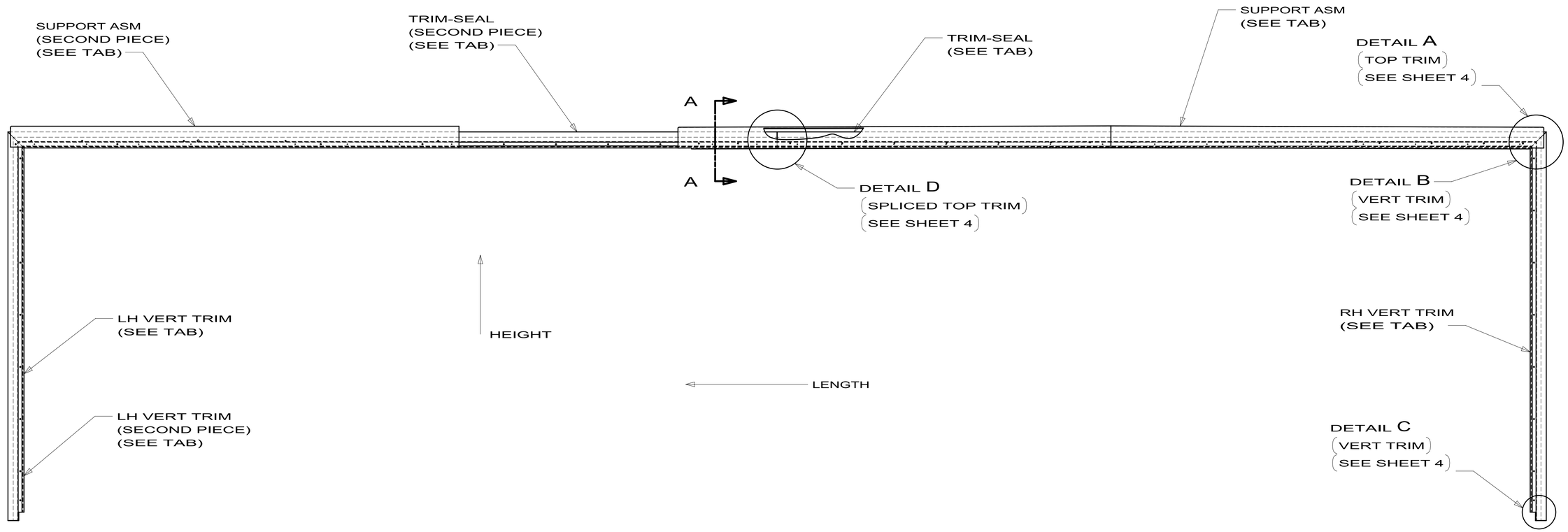

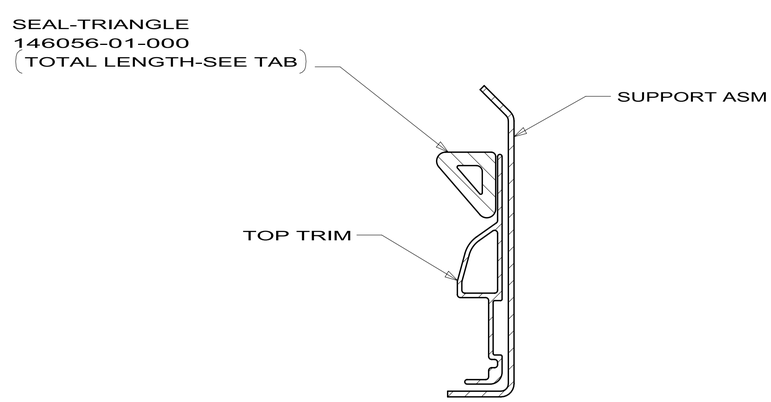

SECTION A-A

FIRST USED	2010 MOTORHOMES
	DO NOT SCALE DRAWING
TITLE:	TRIM KIT-INTERIOR,SLIDEOUT
SHEET 3	PART NO 174648 REV

10/15/2009

DWG NO 174648

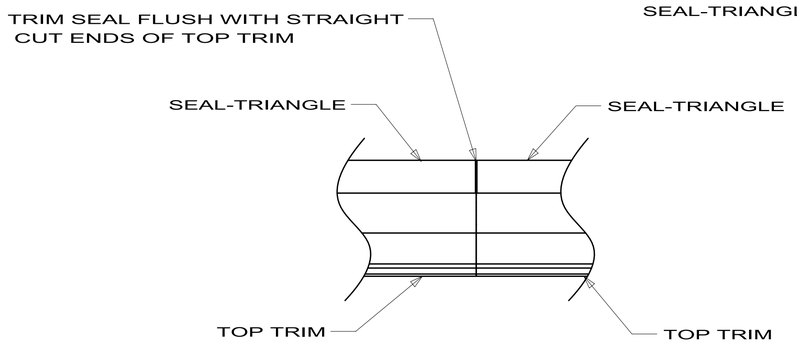

DETAIL D

(USE WITH SPLICED TOP TRIM)

(VIEWED FROM THE BACKSIDE OF THE TRIM)

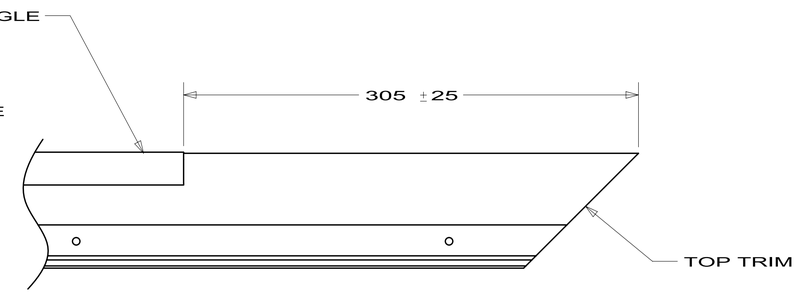

DETAIL A

(MITERED ENDS TOP TRIM)

(VIEWED FROM THE BACKSIDE OF THE TRIM)

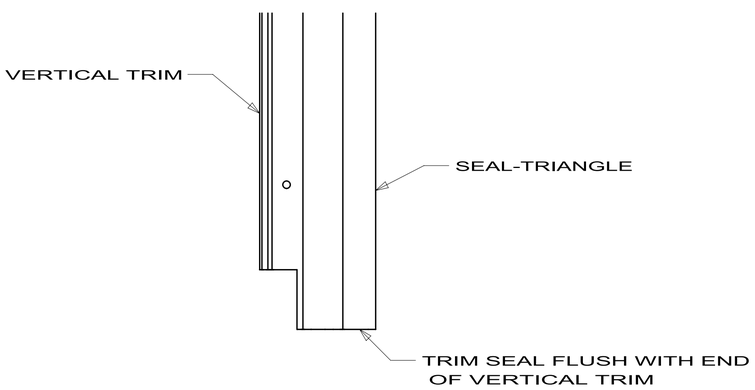

DETAIL C

(BOTTOM OF VERTICAL TRIM)

(VIEWED FROM THE BACKSIDE OF THE TRIM)

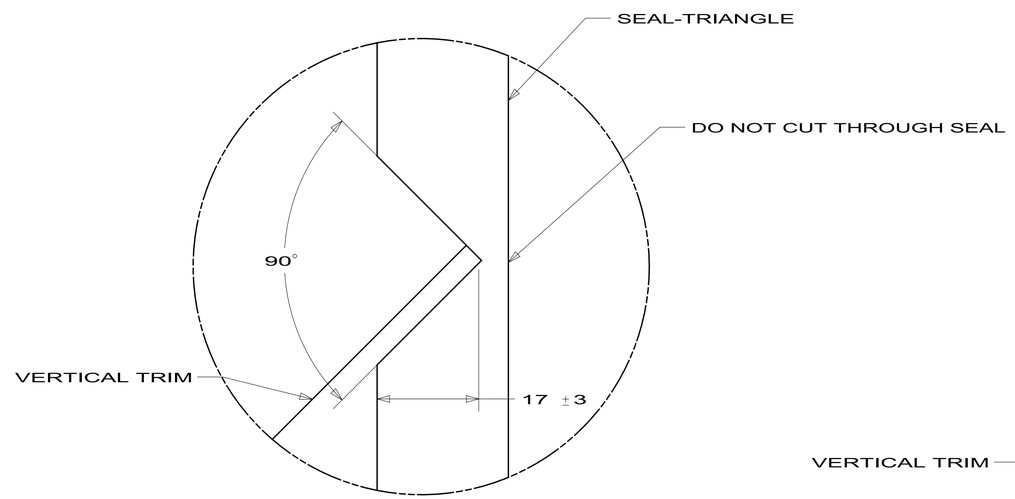

DETAIL E

SEAL IS NOTCHED DURING THE INSTALLATION

OF THE TRIM AND ATTACHED TO THE TOP TRIM

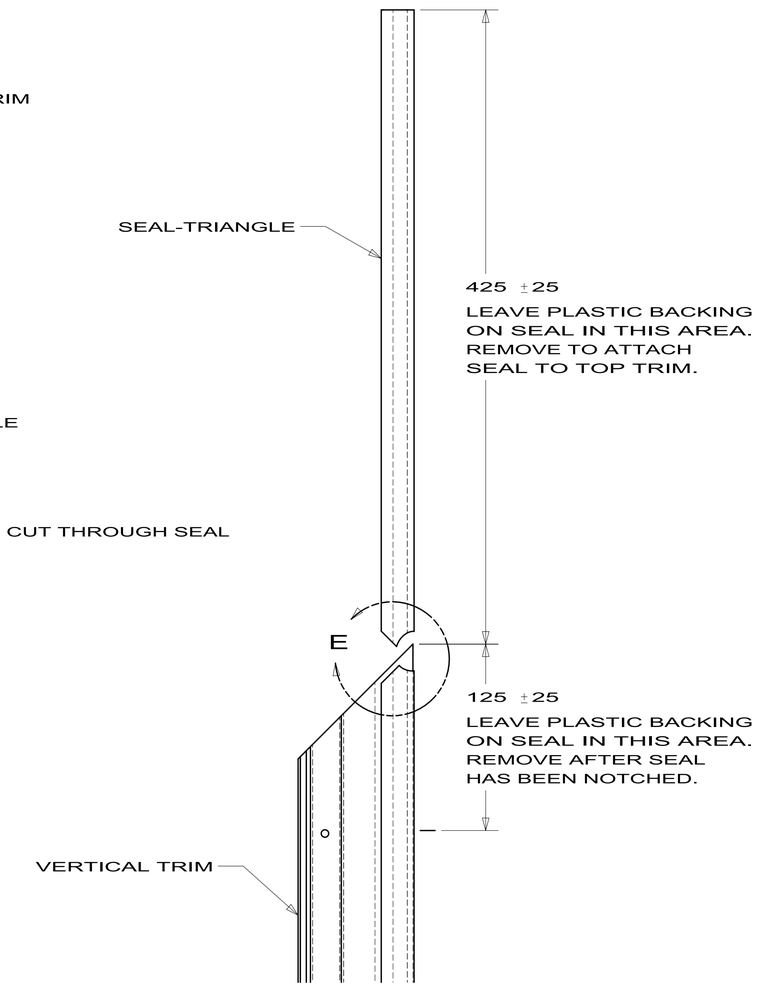

DETAIL B

(MITERED ENDS OF VERTICAL TRIM)

(VIEWED FROM THE BACKSIDE OF THE TRIM)

FIRST USED	2010 MOTORHOMES
	DO NOT SCALE DRAWING
TITLE:	TRIM KIT-INTERIOR,SLIDEOUT
SHEET 4	PART NO 174648 REV

10/15/2009