REV	ZONE	REVISION RECORD	DATE	DFTR-ORIG
		REV DATE	DWG NO	

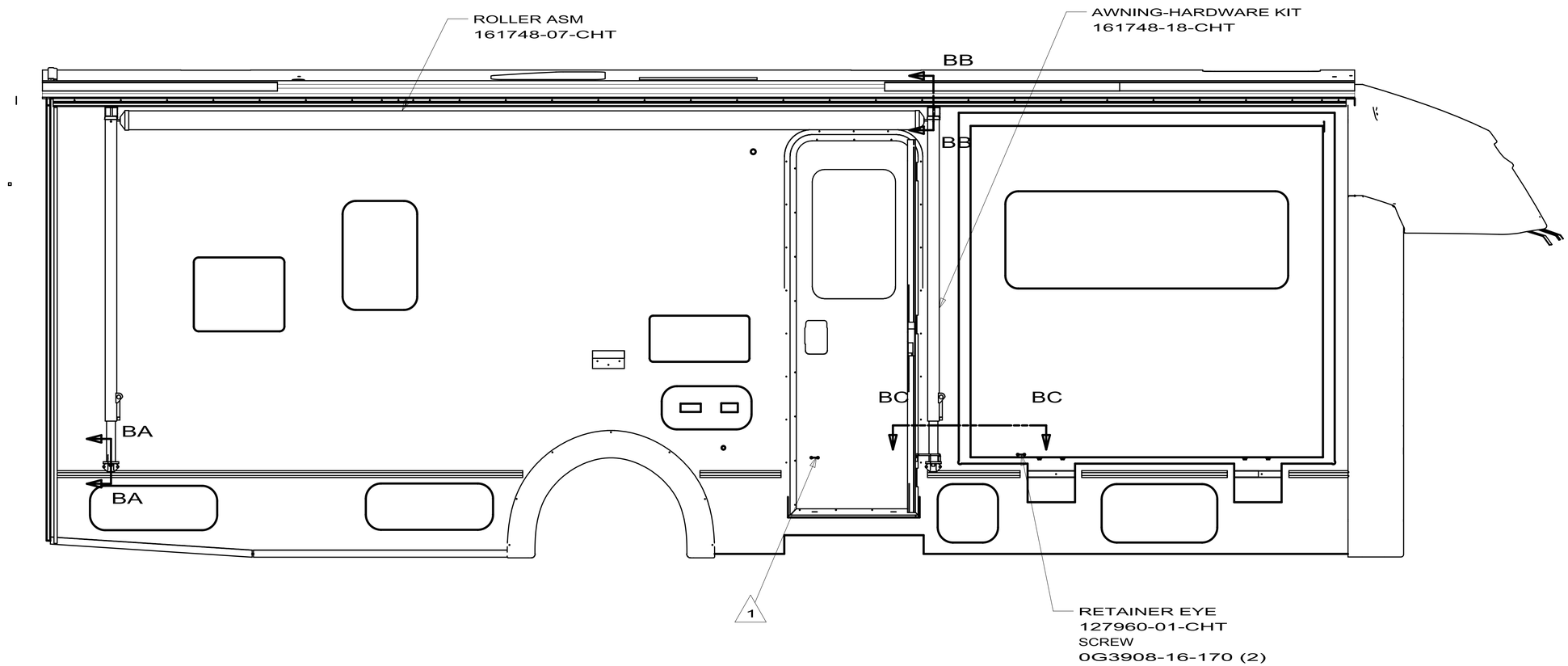

730C
165348-01

2 USE IN PLACE OF KIT SUPPLIED BOLT.

1 REQUIRES ENTRANCE DOOR RETAINER EYE 127960-01-CHT AND RETAINER ROD 127647-03-CHT. LOCATE ABOVE FEATURE STRIP.

NOTES:

COPYRIGHT 2009
WINNEBAGO
INDUSTRIES, INC.

DFTR	ORIG. DATE
CHKR	ALL DIMENSIONS ARE IN MILLIMETERS
P.E.	
M.E.	FIRST USED
DSNR	
UNSPECIFIED TOLERANCES ARE: WHOLE DIM (X) ± ; ONE-PLACE (X.X) ± ; TWO-PLACE (X.XX) ± ; ANGLE ±	MATERIAL:
THIRD ANGLE PROJECTION	

DO NOT SCALE DRAWING

TITLE: AWNING INSTL 700-SERIES

SHEET OF | PART NO. 165348 | REV

REF:

10/29/2009

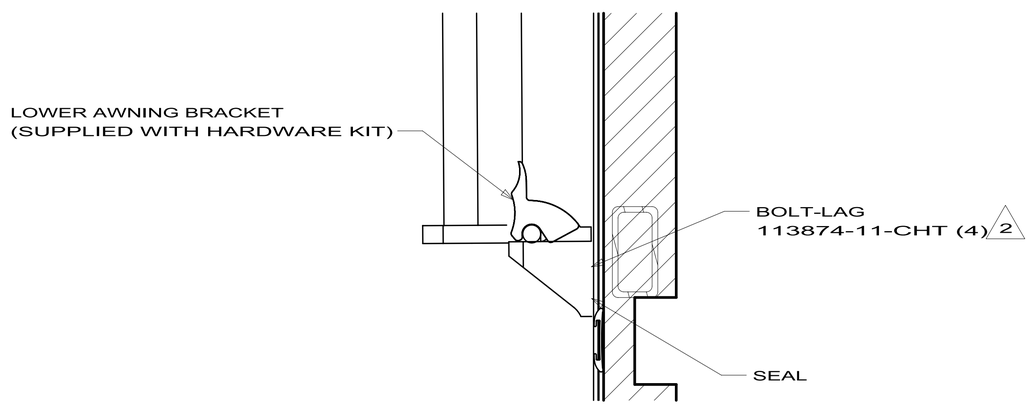

SECTION BA-BA

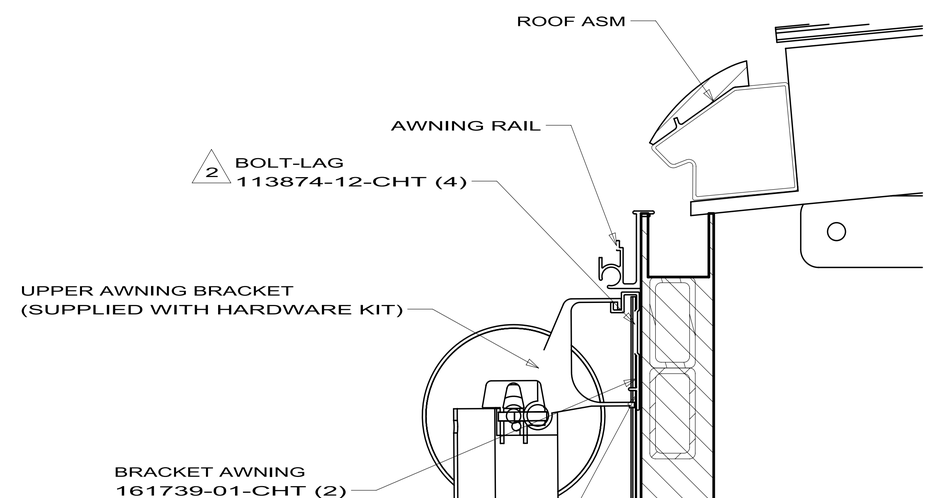

SECTION BB-BB

730C
165348-01

728B
165348-02

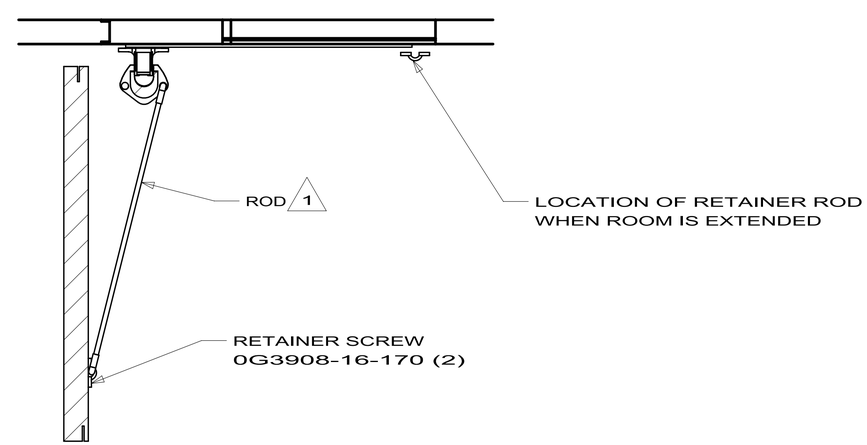

SECTION BC-BC
(DOOR SHOWN OPEN)

AWNING INSTL 700-SERIES
165348

10/29/2009

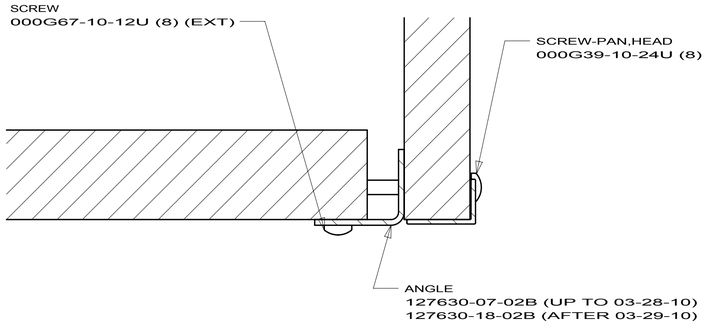

SECTION AA-AA

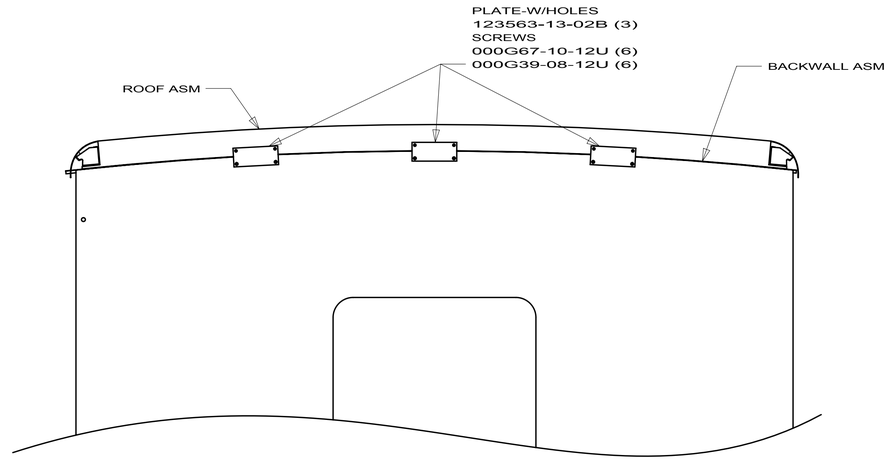

VIEW AB-AB

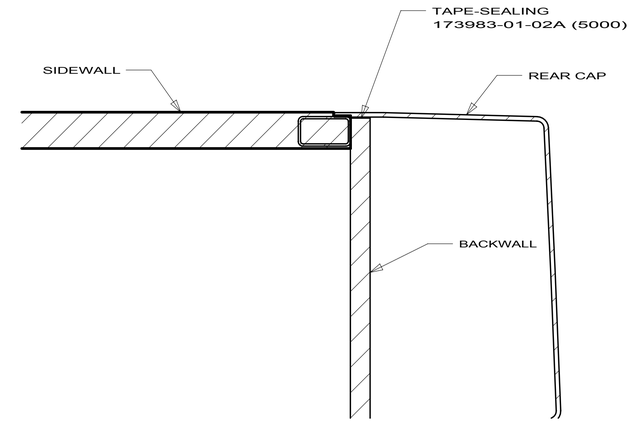

SECTION AK-AK

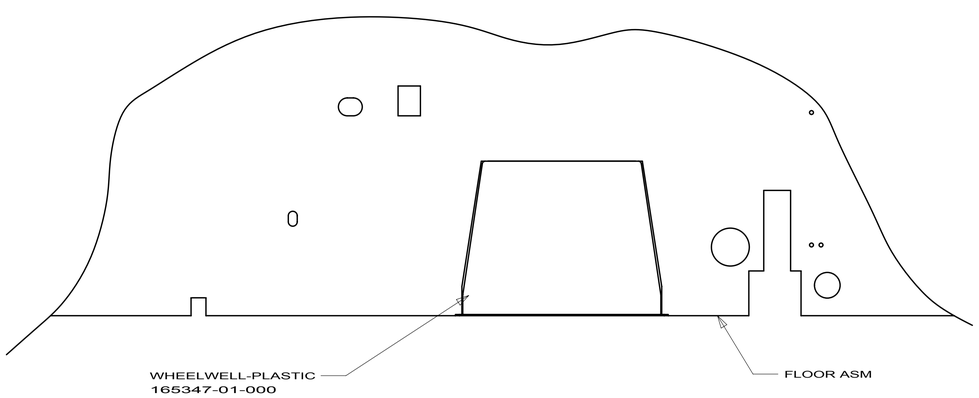

VIEW AC-AC
VIEW AH-AH (SIMILAR)

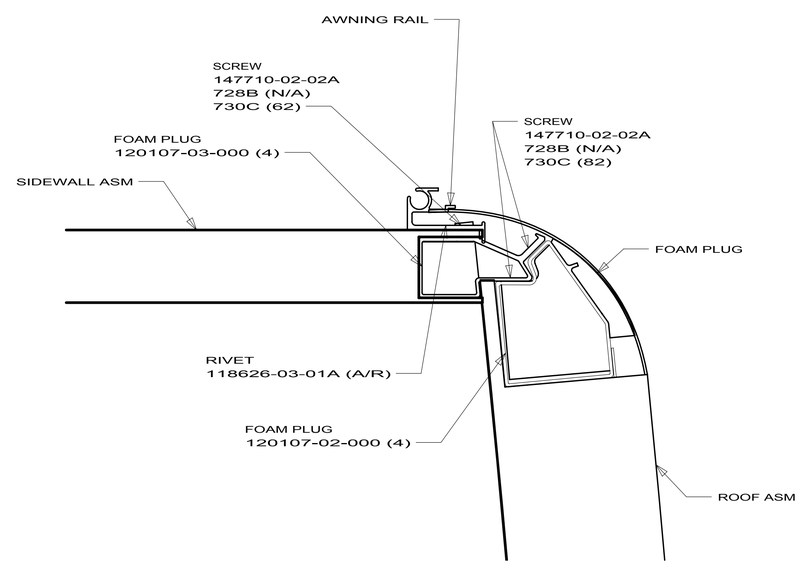

SECTION AD-AD (SHOWN)
SECTION AE-AE (OPPOSITE

09 700-SERIES

BODY INSTL-SECTIONS

1 2 165352

3/31/2010

DWG NO 165352

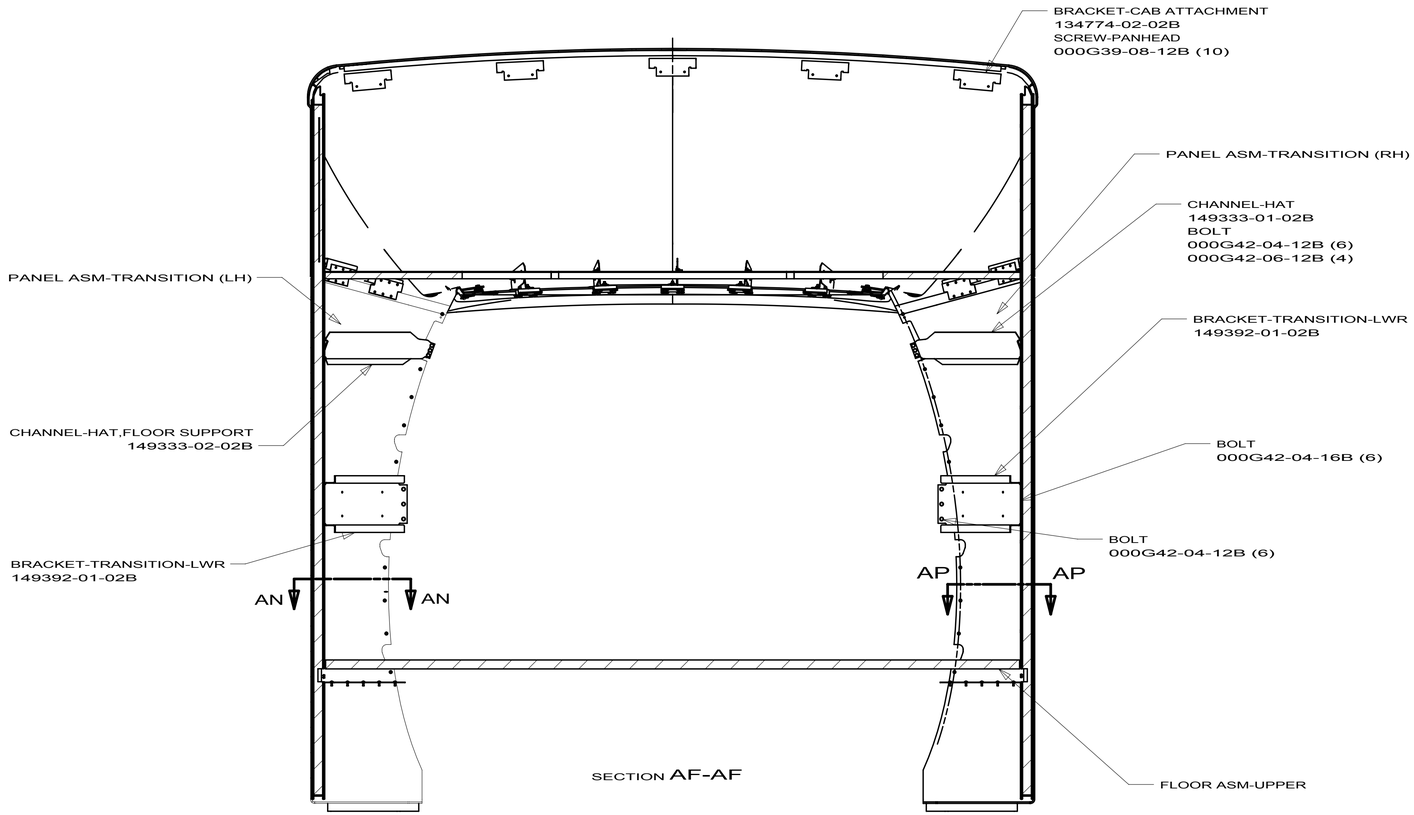

SECTION AF-AF

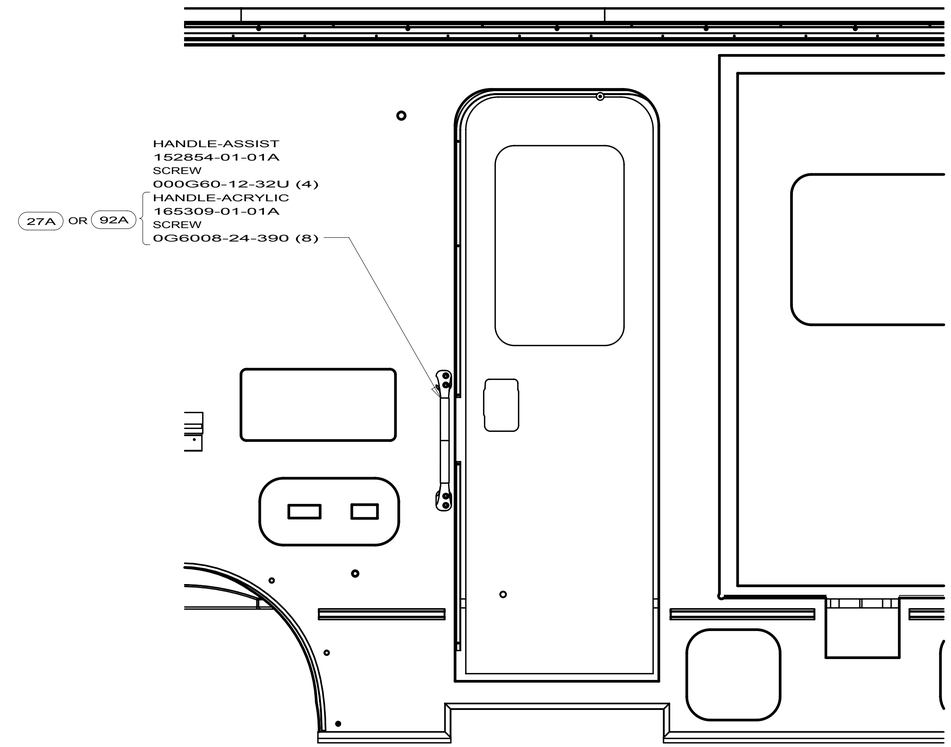

SECTION VIEW AG – AG

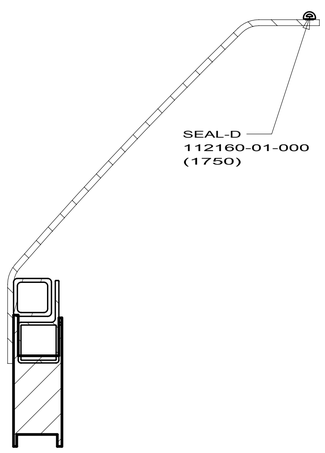

SECTION AN-AN
SECTION AP-AP (OPPOSITE)

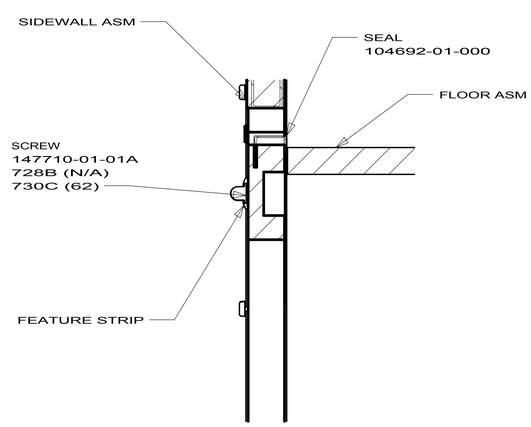

SECTION AL-AL
SECTION AR-AR (OPPOSITE)

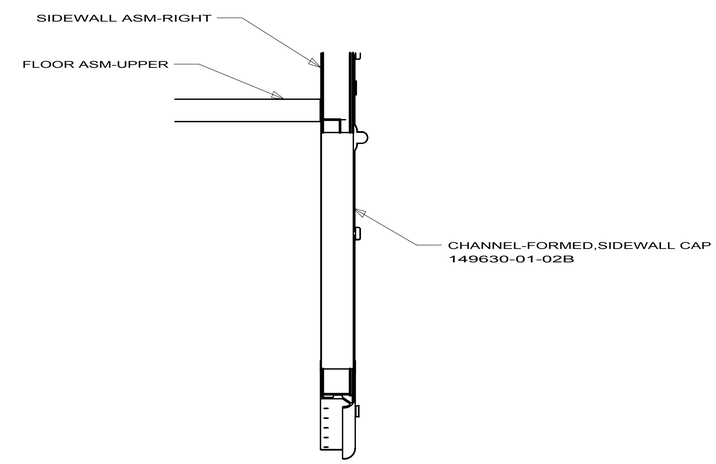

VIEW AM-AM

27A EXT FULL BODY PAINT PKG #1
92A EXT FULL BODY PAINT PKG # 2

FIRST USED	09 700-SERIES
	DO NOT SCALE DRAWING
TITLE:	BODY INSTL-SECTIONS
SHEET 2	PART NO 165352 REV

3/31/2010

DWG NO	SHEET	
167495-01	1	16C 16Y 28N
167495-02	2	16C 16Y 28X

RELEASE	REV A	DATE	DWG NO 167495

REV	ZONE	REVISION RECORD	DATE	DFTR-ORIG

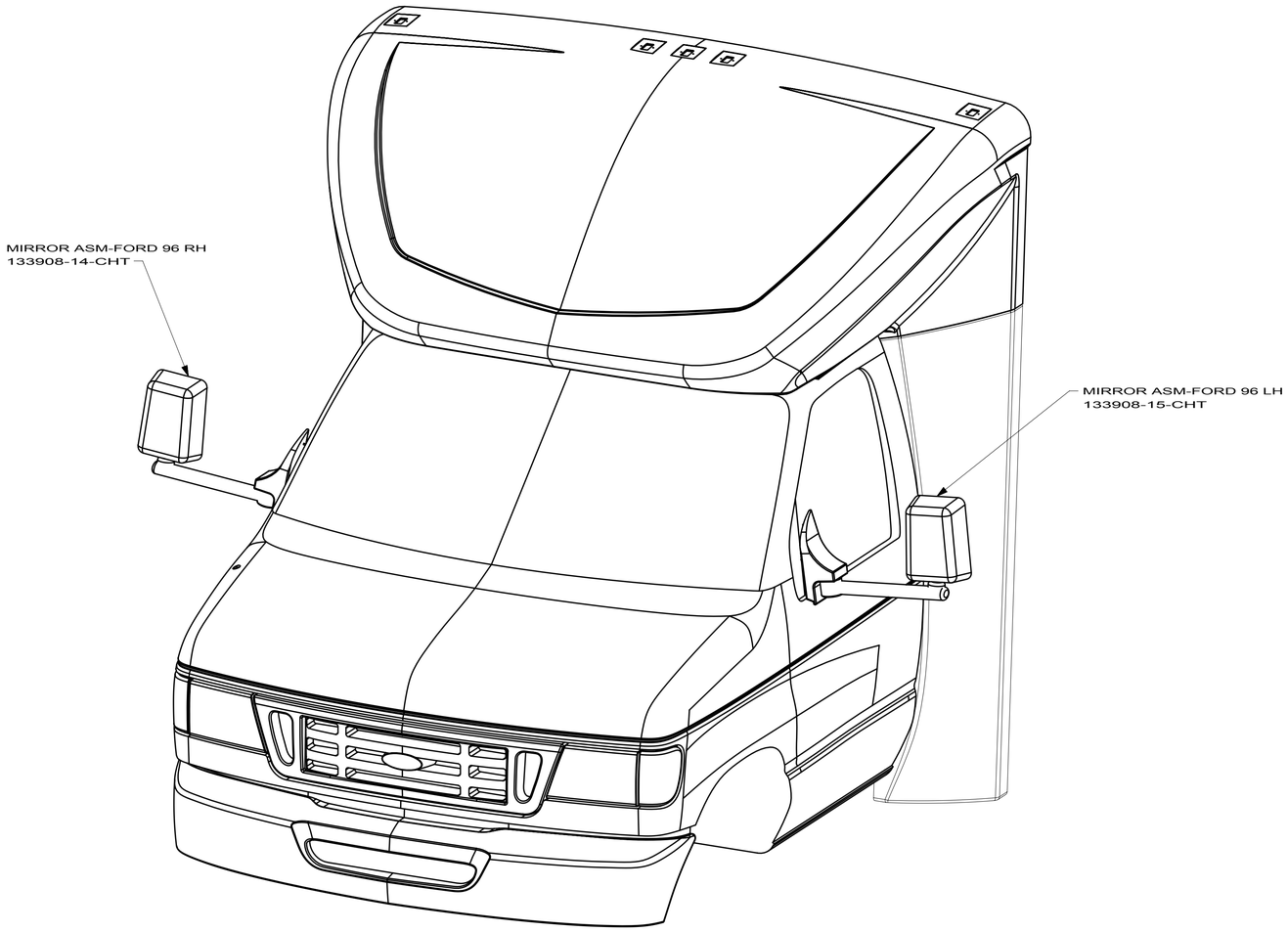

28X MIRRORS-EXTERIOR W/DEFROST
28N MIRRORS-EXTERIOR
16Y FORD CHASSIS 14,500 LB.GVWR
16C FORD CHASSIS 11,500 LB.GVWR

WINNEBAGO INDUSTRIES
COPYRIGHT 2009
WINNEBAGO
INDUSTRIES, INC.

DFTR	ORIG. DATE
CHKR	ALL DIMENSIONS ARE IN MILLIMETERS
P.E.	
M.E.	FIRST USED
DSNR	09 700-SERIES

UNSPECIFIED TOLERANCES ARE:
WHOLE DIM (X) : 3
ONE-PLACE (X.X) : 1.5
TWO-PLACE (X.XX) : 0.50
ANGLE : 1°

MATERIAL:

THIRD ANGLE PROJECTION

DO NOT SCALE DRAWING

TITLE:
MIRROR INSTL-EXTERIOR

SHEET 1 OF 2 | PART NO 167495 | REV

REF: 1

DWG NO 167495

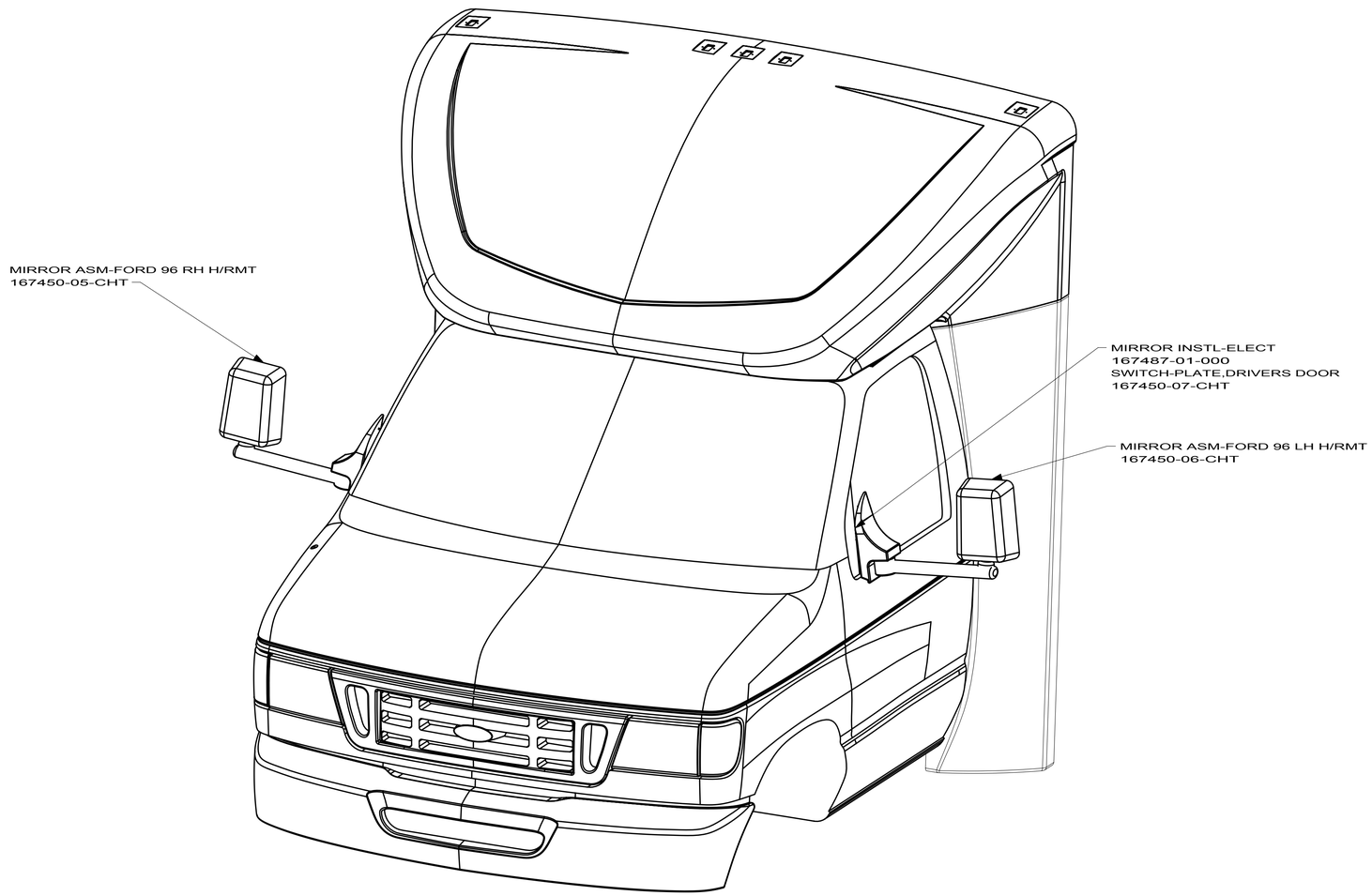

FIRST USED	09 700-SERIES
	DO NOT SCALE DRAWING
TITLE:	MIRROR INSTL-EXTERIOR
SHEET 2	PART NO 167495 REV

KEY	PART NUMBER	U/M	DESCRIPTION	VENDOR NO.
	117051-01-700	EA	MIRROR-CONVEX	723068-4
	120269-01-700	EA	GLASS KIT W/BEZEL RH/LH	709407-8
	133908-03-700	EA	CAP - RECT/BLACK-W/O LIGHT	709577
	133908-04-700	EA	CAP-MIRROR/ROUND - W/O LIGHT	7095470

COPYRIGHT © 2009 WINNEBAGO INDUSTRIES INC.

167450-01-02A

KEY	PART NUMBER	U/M	DESCRIPTION	VENDOR NO.
	167450-01-702	EA	MIRROR HEAD - RIGHT - CHROME	715998
	167450-01-706	EA	FLAT GLASS KIT-HEATED/RIGHT	716104
	167450-01-707	EA	CONVEX GLASS KIT - RIGHT	716106
	167450-01-710	EA	MOTOR - W/WIRE HARNESS	747832
	167450-01-711	EA	GASKETS(2)-BASE MOUNT-FORD	709743
	167450-01-715	EA	ARM CVR KIT-102" RH & LH-BLK	716113

167450-01-03A

KEY	PART NUMBER	U/M	DESCRIPTION	VENDOR NO.
	167450-01-704	EA	MIRROR HEAD - RIGHT - BLACK	715990
	167450-01-706	EA	FLAT GLASS KIT-HEATED/RIGHT	716104
	167450-01-707	EA	CONVEX GLASS KIT - RIGHT	716106
	167450-01-710	EA	MOTOR - W/WIRE HARNESS	747832
	167450-01-711	EA	GASKETS(2)-BASE MOUNT-FORD	709743
	167450-01-715	EA	ARM CVR KIT-102" RH & LH-BLK	716113

167450-02-02A

KEY	PART NUMBER	U/M	DESCRIPTION	VENDOR NO.
	167450-01-703	EA	MIRROR HEAD - LEFT - CHROME	715997
	167450-01-708	EA	FLAT GLASS KIT - HEATED/LEFT	716103
	167450-01-709	EA	CONVEX GLASS KIT - LEFT	716105
	167450-01-710	EA	MOTOR - W/WIRE HARNESS	747832
	167450-01-711	EA	GASKETS(2)-BASE MOUNT-FORD	709743
	167450-01-715	EA	ARM CVR KIT-102" RH & LH-BLK	716113

167450-02-03A

KEY	PART NUMBER	U/M	DESCRIPTION	VENDOR NO.
	167450-01-705	EA	MIRROR HEAD - LEFT - BLACK	715989
	167450-01-708	EA	FLAT GLASS KIT - HEATED/LEFT	716103
	167450-01-709	EA	CONVEX GLASS KIT - LEFT	716105
	167450-01-710	EA	MOTOR - W/WIRE HARNESS	747832
	167450-01-711	EA	GASKETS(2)-BASE MOUNT-FORD	709743
	167450-01-715	EA	ARM CVR KIT-102" RH & LH-BLK	716113

167450-05-02A

KEY	PART NUMBER	U/M	DESCRIPTION	VENDOR NO.
	167450-01-702	EA	MIRROR HEAD - RIGHT - CHROME	715998
	167450-01-706	EA	FLAT GLASS KIT-HEATED/RIGHT	716104
	167450-01-707	EA	CONVEX GLASS KIT - RIGHT	716106
	167450-01-710	EA	MOTOR - W/WIRE HARNESS	747832
	167450-01-711	EA	GASKETS(2)-BASE MOUNT-FORD	709743
	167450-01-713	EA	ARM CVR KIT-96" RH & LH-BLK	716107

167450-05-03A

KEY	PART NUMBER	U/M	DESCRIPTION	VENDOR NO.
	167450-01-704	EA	MIRROR HEAD - RIGHT - BLACK	715990
	167450-01-706	EA	FLAT GLASS KIT-HEATED/RIGHT	716104
	167450-01-707	EA	CONVEX GLASS KIT - RIGHT	716106
	167450-01-710	EA	MOTOR - W/WIRE HARNESS	747832
	167450-01-711	EA	GASKETS(2)-BASE MOUNT-FORD	709743
	167450-01-713	EA	ARM CVR KIT-96" RH & LH-BLK	716107

COPYRIGHT © 2009 WINNEBAGO INDUSTRIES INC.

167450-06-02A

KEY	PART NUMBER	U/M	DESCRIPTION	VENDOR NO.
	167450-01-703	EA	MIRROR HEAD - LEFT - CHROME	715997
	167450-01-708	EA	FLAT GLASS KIT - HEATED/LEFT	716103
	167450-01-709	EA	CONVEX GLASS KIT - LEFT	716105
	167450-01-710	EA	MOTOR - W/WIRE HARNESS	747832
	167450-01-711	EA	GASKETS(2)-BASE MOUNT-FORD	709743
	167450-01-713	EA	ARM CVR KIT-96" RH & LH-BLK	716107

167450-06-03A

KEY	PART NUMBER	U/M	DESCRIPTION	VENDOR NO.
	167450-01-705	EA	MIRROR HEAD - LEFT - BLACK	715989
	167450-01-708	EA	FLAT GLASS KIT - HEATED/LEFT	716103
	167450-01-709	EA	CONVEX GLASS KIT - LEFT	716105
	167450-01-710	EA	MOTOR - W/WIRE HARNESS	747832
	167450-01-711	EA	GASKETS(2)-BASE MOUNT-FORD	709743
	167450-01-713	EA	ARM CVR KIT-96" RH & LH-BLK	716107

COPYRIGHT © 2009 WINNEBAGO INDUSTRIES INC.

DRAWING NO.	SWITCH PLATE	CHASSIS
167487-01	167450-07	FORD
167487-02	167450-09	N/A

RELEASE	REV A	DATE	DWG NO 167487
REV	ZONE	REVISION RECORD	DATE	DFTR-ORIG

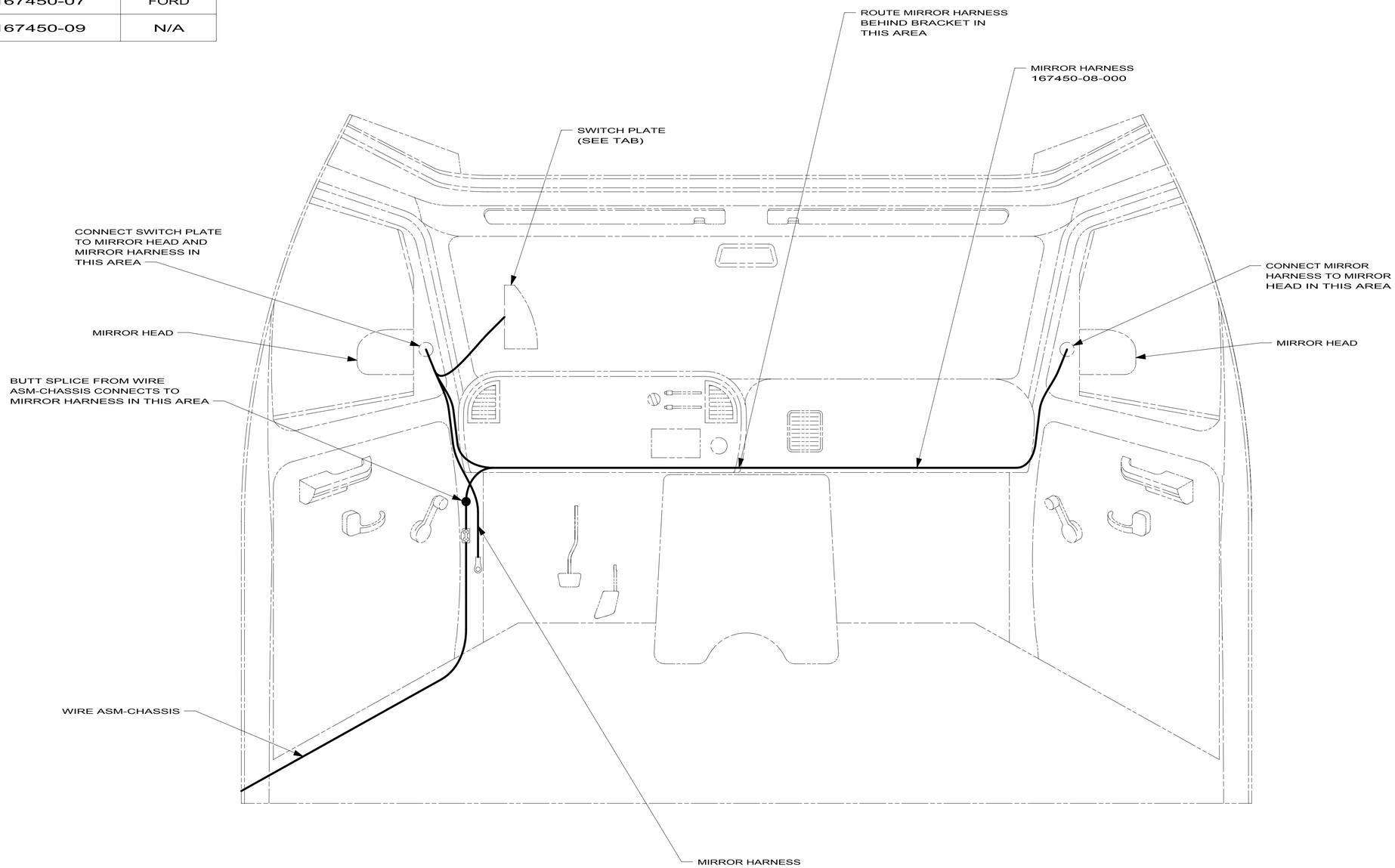

FOR ELECTRICAL TORQUE SPECIFICATIONS SEE DWG NO. 128783-01-000

X-X FOR ELECTRICAL CALLOUTS SEE DWG NO. 121339-01-000

COPYRIGHT 2009 WINNEBAGO INDUSTRIES, INC.

DFTR	ORIG. DATE
CHKR	ALL DIMENSIONS ARE IN MILLIMETERS
P.E.	
M.E.	FIRST USED
DSNR	09 C-BODIES

UNSPECIFIED TOLERANCES ARE:

WHOLE DIM (X)	±	3
ONE-PLACE (X.X)	±	1.5
TWO-PLACE (X.XX)	±	0.50
ANGLE	±	1°

MATERIAL:

THIRD ANGLE PROJECTION

DO NOT SCALE DRAWING

TITLE: MIRROR INSTL-ELECTRIC

SHEET 1 OF 2 | PART NO 167487 | REV

REF: 1

10/27/2009

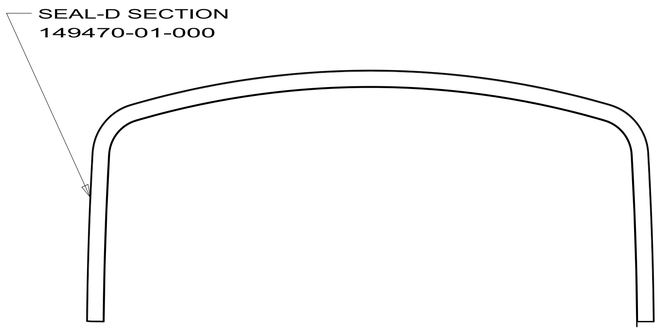

VIEW A
(ONLY SEAL SHOWN)

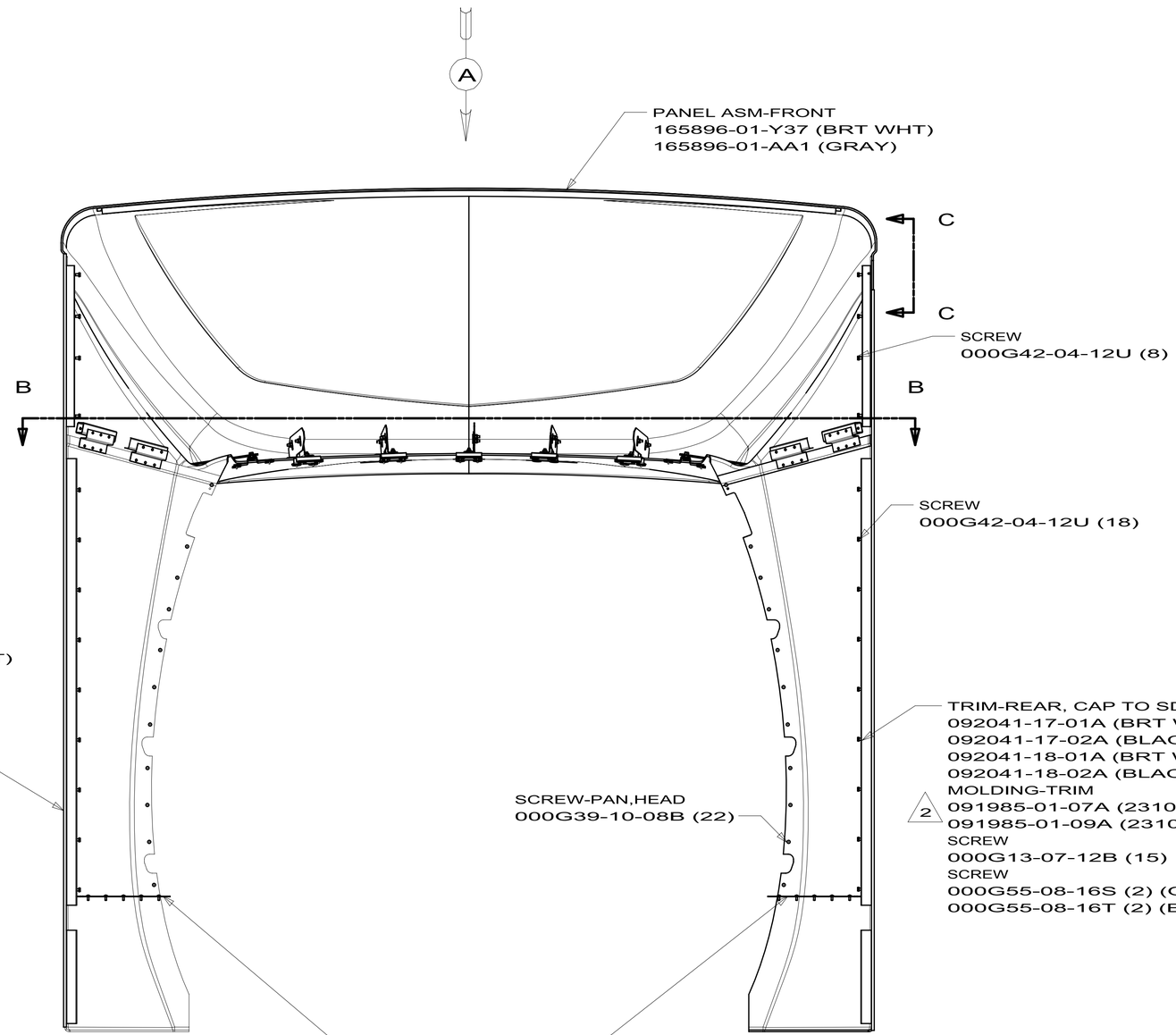

SPACER
168308-01-01A (BRT WHT)(730C)
168308-01-02A (BLACK)(730C)
SCREW
000G13-08-10S

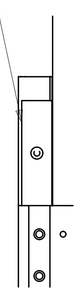

SECTION C-C

09 700-SERIES

2 CLEAN AND APPLY ADHESIVE PROMOTER 087211-01-000 TO BOTH SURFACES AND BOND WITH TAPE 076322 ALONG ENTIRE LENGTH.

NOTES:

BODY PANEL INSTL-FRONT

1 2 165897

12/11/2009

BRACKET ASM-ANGLE,RH
149949-04-02B (2)
NUT-HEX
000D39-04-00U (4) (UP TO 12-06-09)
000D29-04-00F (4) (AFTER 12-07-09)
WASHER
000E13-14-00B (4) (AFTER 12-07-09)
TAPE
152038-01-01A (2) (115)

BRACKET ASM-ANGLE,RH
149949-02-02B (3)
NUT-HEX
000D39-04-00U (6) (UP TO 12-06-09)
000D29-04-00F (6) (AFTER 12-07-09)
WASHER
000E13-14-00B (6) (AFTER 12-07-09)
TAPE
152038-01-01A (3) (115)

CHANNEL-HAT,MOUNT,CAP
143322-02-02B
PLATE ASM-CLAMP,CAP
143323-02-02B
NUT-HEX
000D39-04-00U (UP TO 12-06-09)
000D29-04-00F (AFTER 12-07-09)
WASHER
000E13-14-00B (AFTER 12-07-09)
RIVET-POP-STL 3/16 X .126-.187
000H15-06-03R (4)
WASHER-FENDER 3/16 ID X 1.00D
077071-01-000 (4)
SEALANT
072889-20-000
TAPE
152038-01-01A (70)

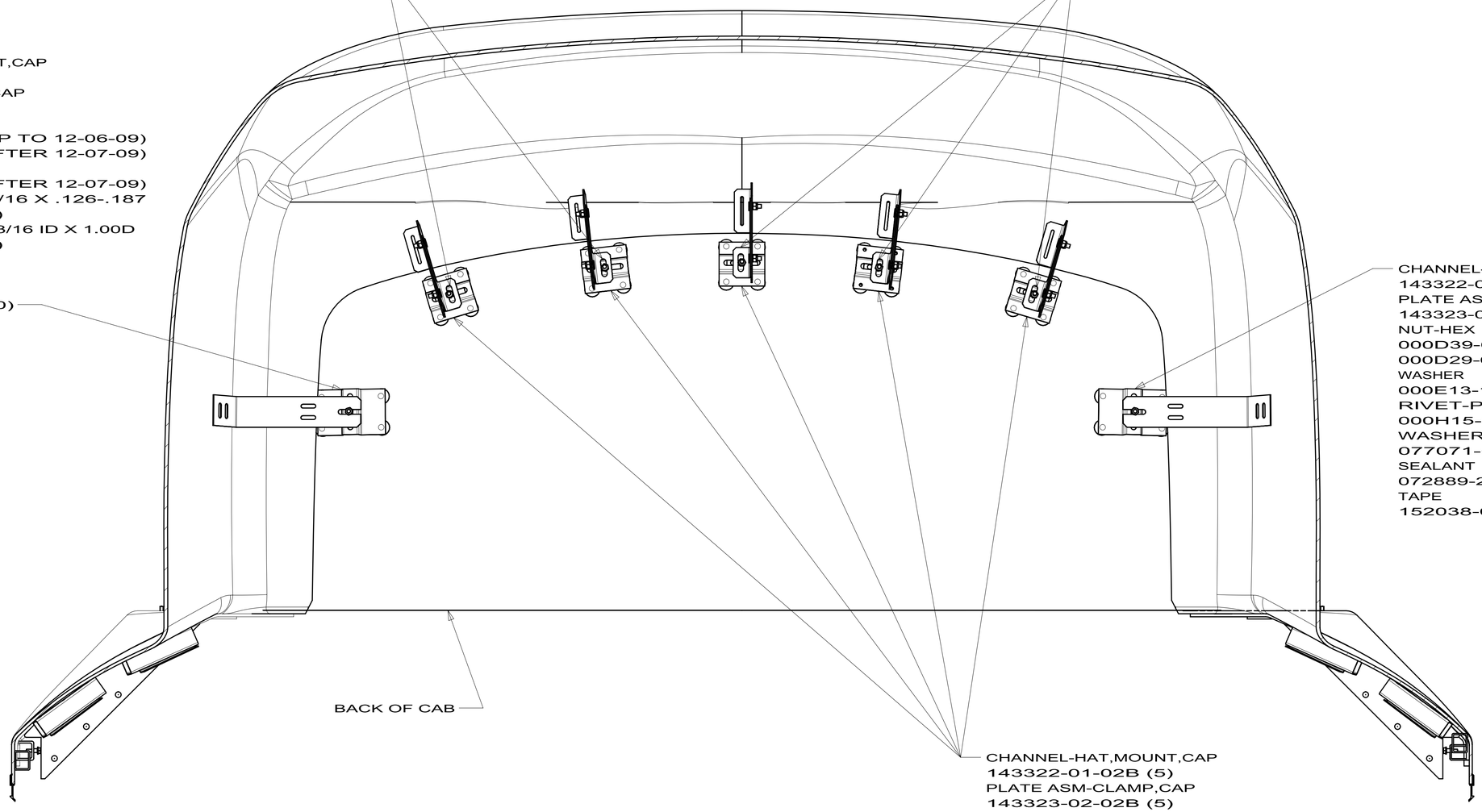

CHANNEL-HAT,MOUNT,CAP
143322-02-02B
PLATE ASM-CLAMP,CAP
143323-02-02B
NUT-HEX
000D39-04-00U (UP TO 12-06-09)
000D29-04-00F (AFTER 12-07-09)
WASHER
000E13-14-00B (AFTER 12-07-09)
RIVET-POP-STL 3/16 X .126-.187
000H15-06-03R (4)
WASHER-FENDER 3/16 ID X 1.00D
077071-01-000 (4)
SEALANT
072889-20-000
TAPE
152038-01-01A (70)

CHANNEL-HAT,MOUNT,CAP
143322-01-02B (5)
PLATE ASM-CLAMP,CAP
143323-02-02B (5)
NUT-HEX
000D39-04-00U (5) (UP TO 12-06-09)
000D29-04-00F (5) (AFTER 12-07-09)
WASHER
000E13-14-00B (5) (AFTER 12-07-09)
RIVET-POP-STL 3/16 X .126-.187
000H15-06-03R (20)
WASHER-FENDER 3/16 ID X 1.00D
077071-01-000 (20)
SEALANT
072889-20-000

SECTION B-B

09 700-SERIES

BODY PANEL INSTL-FRONT

12/11/2009

DWG NO	UNIT	PAINT MASK KIT	SHEET
171567-01	728B	170853-01-01A	1,2
171567-02	730C	170853-02-01A	1,2

RELEASE	REV A	DATE	DWG NO 171567
REV	ZONE	REVISION RECORD	DATE	DFTR-ORIG

KEY	PART NUMBER (26F)	PART NUMBER (26H)	DESCRIPTION
1	120702-03-33A		DECAL-LOGO WINNEBAGO
2	150102-01-01A		DECAL-LOGO ASPECT LG
3	150102-02-01A		DECAL-LOGO ASPECT SML
4	151687-01-01A		DECAL/BEZEL DOMED NAMEPLATE WINNEBAGO
5	132664-02-01A		DECAL-LOGO DOMED WINNEBAGO
6	166690-01-01A	166690-01-02A	DECAL-FRONT & BACK
7	166691-01-01A		DECAL-SWEEP #1 RH
8	166691-02-01A		DECAL-SWEEP #1 LH
9	166692-01-01A	166692-01-02A	DECAL-SWEEP #2 RH
10	166692-02-01A	166692-02-02A	DECAL-SWEEP #2 LH
11	166693-01-01A	166693-01-02A	DECAL-SWEEP #3 RH
12	166693-02-01A	166693-02-02A	DECAL-SWEEP #3 LH
13	166694-01-01A	166694-01-02A	DECAL-ZIG RH
14	166694-02-01A	166694-02-02A	DECAL-ZIG LH
15	166695-01-01A	166695-01-02A	DECAL-SWEEP CAB RH
16	166695-02-01A	166695-02-02A	DECAL-SWEEP CAB LH
17	141599-74-000	141599-95-000	PAINT
18	141599-88-000	141599-41-000	PAINT

NOTES:

10. BODY COLOR.

9. CENTER ON SURFACE.

8. LOCATE DECAL 240mm LEFT OF HOOD EDGE AND 190mm UP FROM FRONT EDGE OF HOOD.

7. VINYL DECAL WILL BE APPLIED WHERE EVER GRAPHIC DESIGN PATTERN IS POSITIONED OVER SLIDEROOM EXTRUSION, BUT WILL NOT BE APPLIED TO VINYL SCREW COVER INSERTS.

6. PAINT AREA IS TO BE BELOW FEATURE STRIP FOR OPTIONAL PAINTED MODELS AND CONTINUES ON CAB DOORS TO WHEEL WELL, INCLUDING RUNNING BOARD.

5. NO VINYL OR PAINT ON SLIDEOUT ROOM END PANELS.

4. ALL LOGOS ARE TO BE +/- 1mm ON A HORIZONTAL PLANE (END TO END).

3. CLEAR COAT 141599-27-000 TO BE APPLIED ON ALL PAINTED AREAS.

2. APPLY FILM-URETHANE PROTECTANT 109506-01-000 AT BOTTOM OF ENTRANCE DOOR TO PREVENT SCUFFMARKS.

1. APPLY PROTECTOR 116424-01-000 TO WATER HEATER DOOR LATCH.

SEE CHART

FOR COLOR VARIATIONS OF THIS PART

26H EXT GRAPHIC/PAINT-DLX PKG 2

26F EXT GRAPHIC/PAINT DLX PKG 1

WINNEBAGO INDUSTRIES

COPYRIGHT 2009 WINNEBAGO INDUSTRIES, INC.

DFTR | ORIG. DATE

CHKR | ALL DIMENSIONS ARE IN MILLIMETERS

P.E.

M.E. | FIRST USED 10 700 SER (ASPECT)

DSNR

UNSPECIFIED TOLERANCES ARE:
WHOLE DIM (X) : 3
ONE-PLACE (X.X) : 1.5
TWO-PLACE (X.XX) : 0.50
ANGLE : 1°

MATERIAL:

THIRD ANGLE PROJECTION

DO NOT SCALE DRAWING

TITLE: GRAPHICS INSTALLATION

SHEET 1 OF 2 | PART NO 171567 | REV

REF:

DWG NO 171567

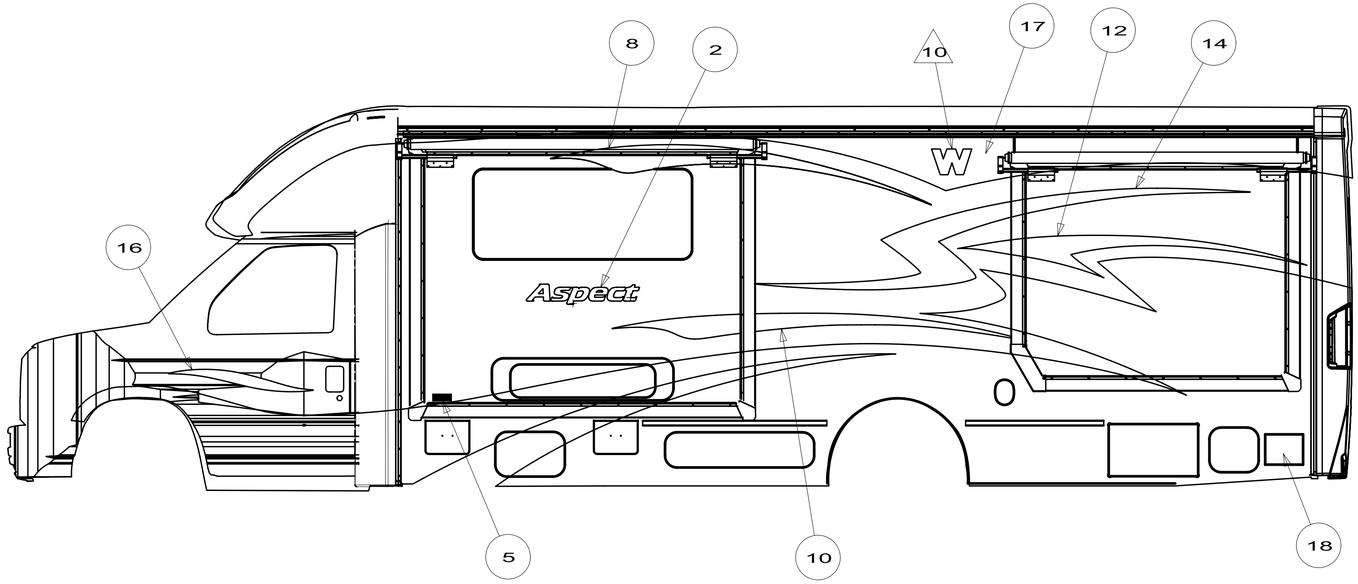

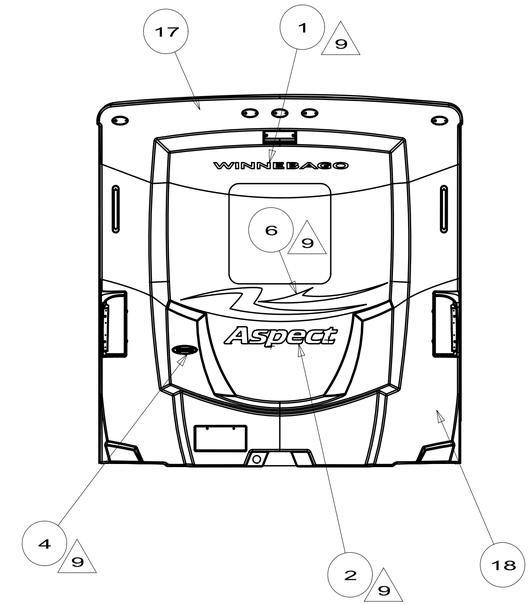

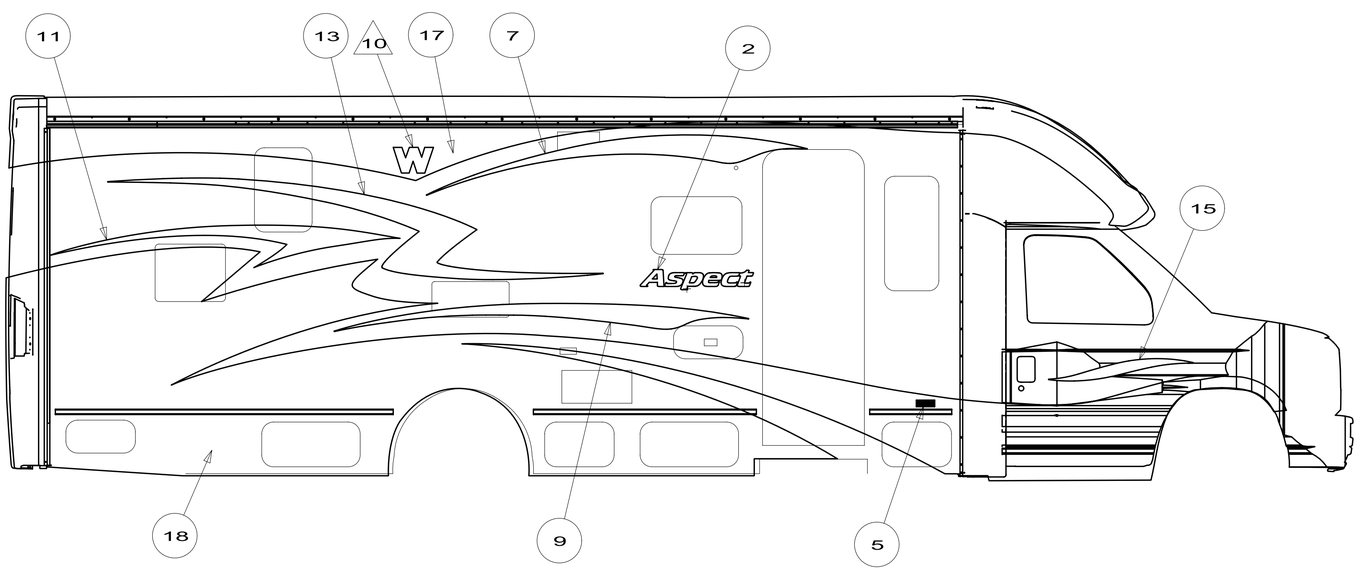

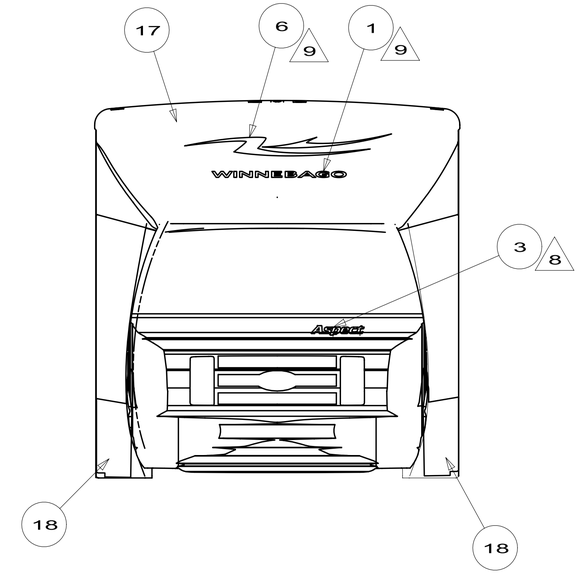

FIRST USED	10 728B (ASPECT)
	DO NOT SCALE DRAWING
TITLE:	GRAPHICS INSTALLATION
SHEET 2	PART NO 171567 REV

DWG NO	UNIT	PAINT MASK KIT	SHEET
171568-01	728B	171119-01-01A	1,2
171568-02	730C	171119-02-01A	1,2

RELEASE	REV A	DATE	DWG NO 171568
REV	ZONE	REVISION RECORD	DATE	DFTR-ORIG

KEY	PART NUMBER (26F)	PART NUMBER (26H)	DESCRIPTION
1	124806-01-67A	124806-01-68A	DECAL-ITASCA W/ICON
2	132664-02-01A		DECAL-LOGO DOMED WINNEBAGO
3	144587-03-27A	144587-03-28A	DECAL-ITASCA
4	150103-01-01A		DECAL-LOGO CAMBRIA LG
5	151687-02-01A		DECAL/BEZEL DOMED NAMEPLATE ITASCA
6	166716-01-01A	166716-01-02A	DECAL-FRONT & REAR
7	166717-01-01A	166717-01-02A	DECAL-SWEEP #1 RH
8	166717-02-01A	166717-02-02A	DECAL-SWEEP #1 LH
9	166718-01-01A	166718-01-02A	DECAL-SWEEP #2 RH
10	166718-02-01A	166718-02-02A	DECAL-SWEEP #2 LH
11	166719-01-01A	166719-01-02A	DECAL-EDGE #1 RH
12	166719-02-01A	166719-02-02A	DECAL-EDGE #1 LH
13	166720-01-01A	166720-01-02A	DECAL-EDGE #2 RH
14	166720-02-01A	166720-02-02A	DECAL-EDGE #2 LH
15	166721-01-01A	166721-01-02A	DECAL-EDGE #3 RH
16	166721-02-01A	166721-02-02A	DECAL-EDGE #3 LH
17	166722-01-01A	166722-01-02A	DECAL-CAB RH
18	166722-02-01A	166722-02-02A	DECAL-CAB LH
19	141599-88-000	141599-B0-000	PAINT
20	141599-B8-000	141599-41-000	PAINT

NOTES:

10. USE EDGE OF TRIM TO HORIZONTALLY ALIGN DECAL.

9. CENTER ON SURFACE.

8. ALIGN WINGWALL FILM WITH CAB & SIDEWALL DECALS.

7. VINYL DECAL WILL BE APPLIED WHERE EVER GRAPHIC DESIGN PATTERN IS POSITIONED OVER SLIDEROOM EXTRUSION, BUT WILL NOT BE APPLIED TO VINYL SCREW COVER INSERTS.

6. PAINT AREA IS TO BE BELOW FEATURE STRIP FOR OPTIONAL PAINTED MODELS AND CONTINUES ON CAB DOORS TO WHEEL WELL, INCLUDING RUNNING BOARD.

5. NO VINYL OR PAINT ON SLIDEOUT ROOM END PANELS.

4. ALL LOGOS ARE TO BE +/- 1mm ON A HORIZONTAL PLANE (END TO END).

3. CLEAR COAT 141599-27-000 TO BE APPLIED ON ALL PAINTED AREAS.

2. APPLY FILM-URETHANE PROTECTANT 109506-01-000 AT BOTTOM OF ENTRANCE DOOR TO PREVENT SCUFFMARKS.

1. APPLY PROTECTOR 116424-01-000 TO WATER HEATER DOOR LATCH.

SEE CHART

FOR COLOR VARIATIONS OF THIS PART

26H EXT GRAPHIC/PAINT-DLX PKG 2

26F EXT GRAPHIC/PAINT DLX PKG 1

COPYRIGHT 2009
WINNEBAGO
INDUSTRIES, INC.

DFTR	ORIG. DATE
CHKR	ALL DIMENSIONS ARE IN MILLIMETERS
P.E.	
M.E.	FIRST USED 10 700 SER (CAMBRIA)
DSNR	

UNSPECIFIED TOLERANCES ARE:
WHOLE DIM (X) : 3
ONE-PLACE (X.X) : 1.5
TWO-PLACE (X.XX) : 0.50
ANGLE : 1°

MATERIAL:

THIRD ANGLE PROJECTION

DO NOT SCALE DRAWING

TITLE: GRAPHICS INSTALLATION

SHEET 1 OF 2 | PART NO. 171568 | REV

REF:

DWG NO 171568

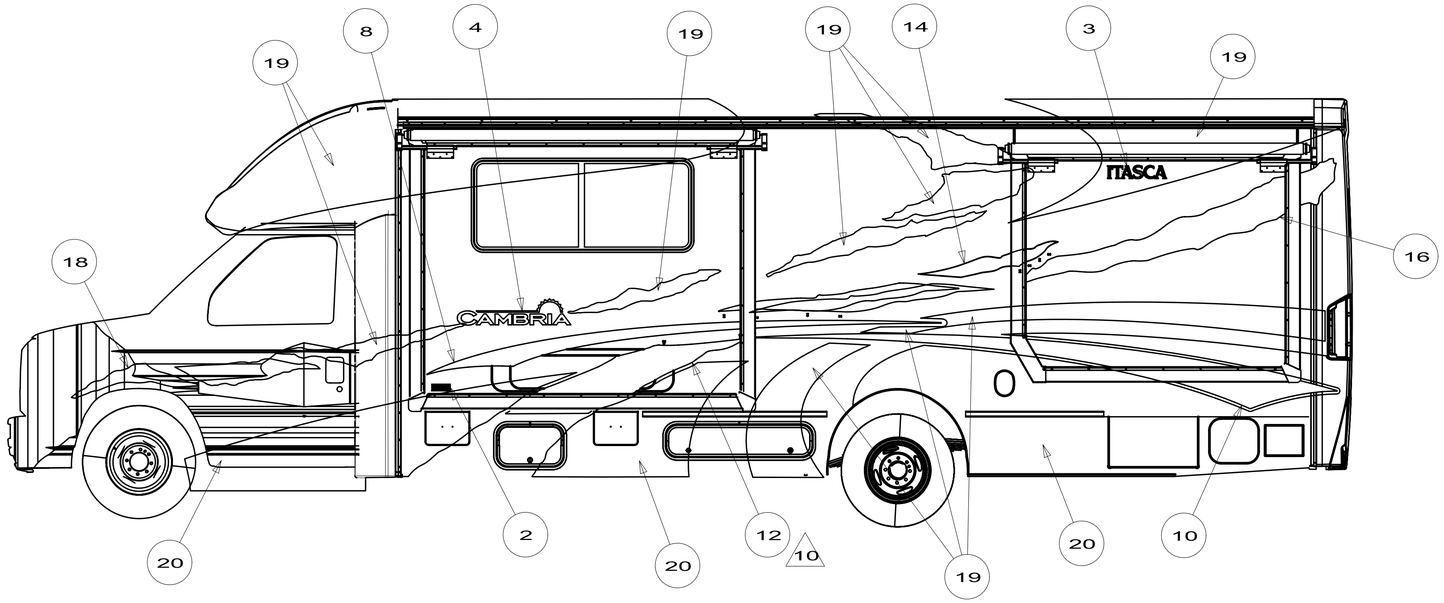

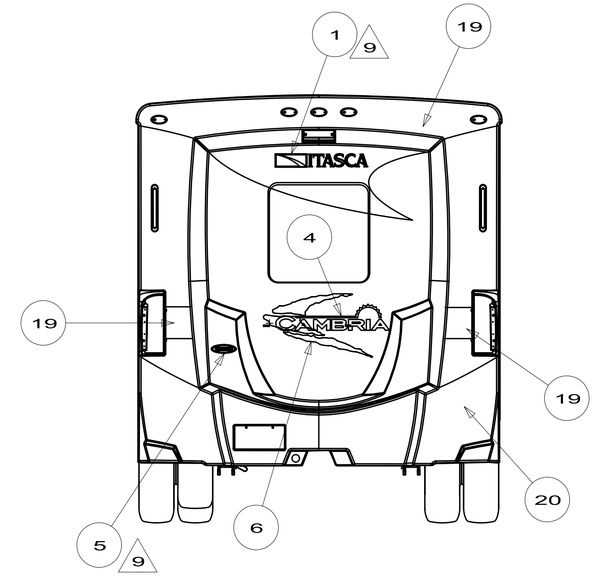

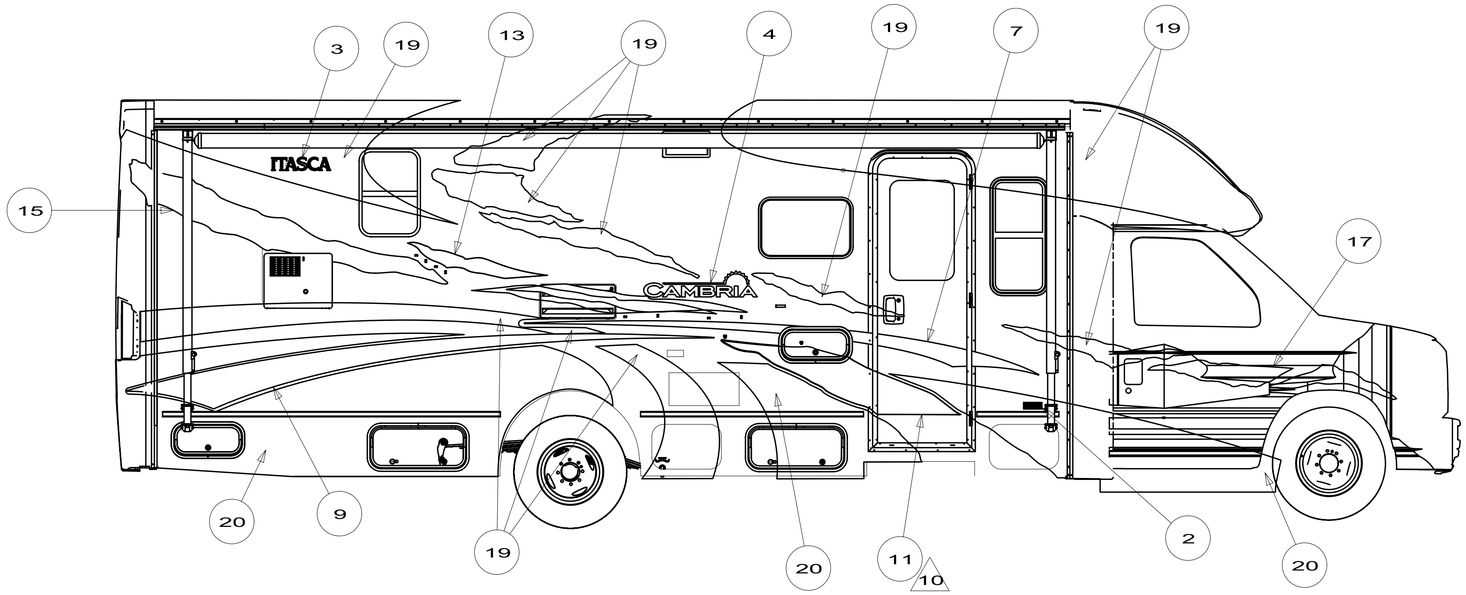

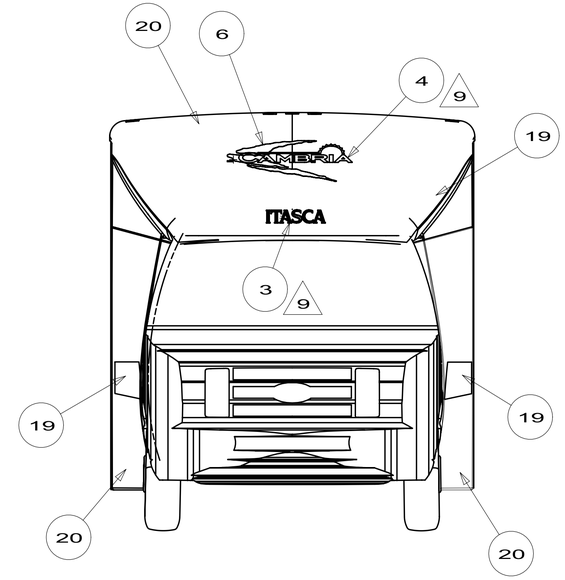

FIRST USED	10 728B (CAMBRIA)
	DO NOT SCALE DRAWING
TITLE:	GRAPHICS INSTALLATION
SHEET 2	PART NO 171568 REV

DWG NO	UNIT	A	B	C	D	E	F	G	H
171737-01	728B	820	735	1650	2150	32	165	175	200
171737-02	730C	775	780	2045	2146	130	130	180	180

RELEASE	REV A	DATE 10--23--08	DWG NO 171737
REV	ZONE	REVISION RECORD	DATE / DFTR.ORIG

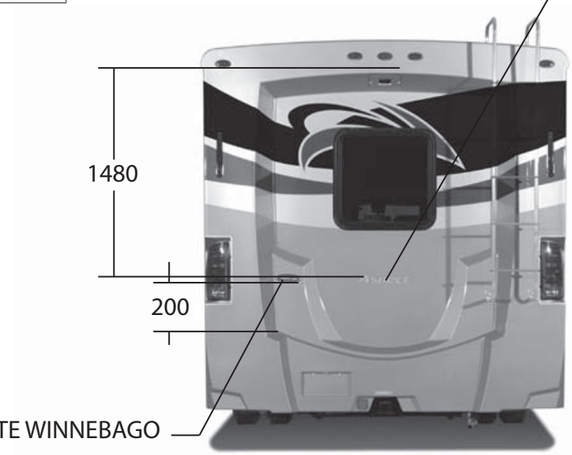

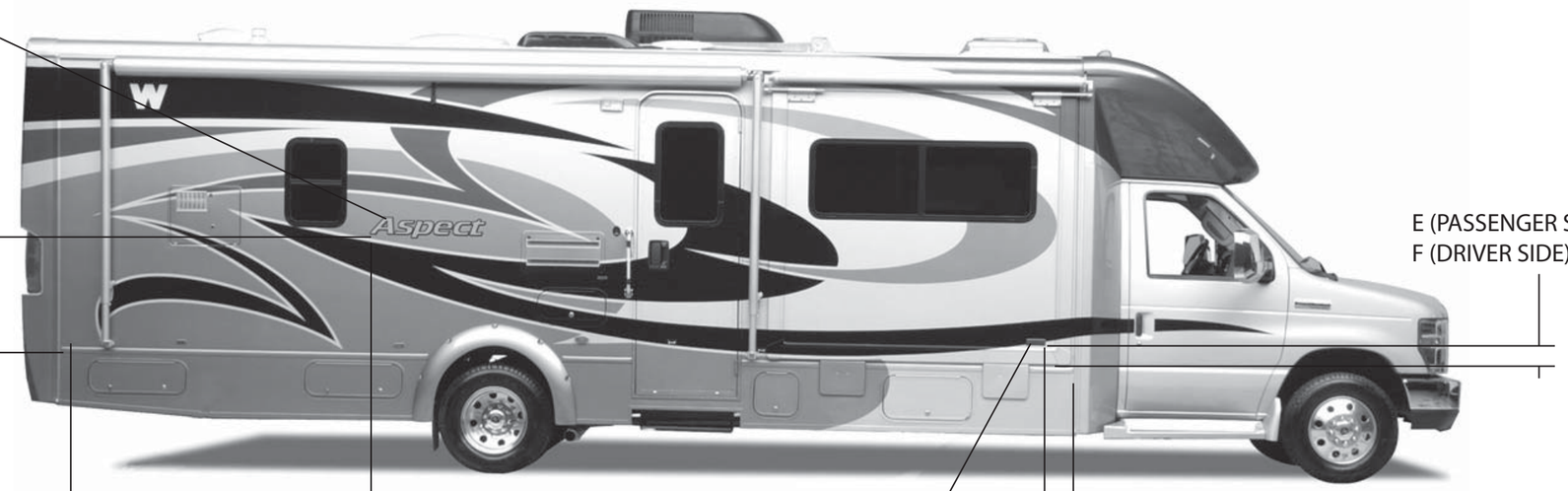

NOTES:

10 CENTER ON SURFACE.

9 LOCATE DECAL 120MM RIGHT OF HOOD EMBLEM AND 70MM UP FROM GRILLE.

8. PASSENGER SIDE OF UNIT SHOWN, DRIVER'S SIDE OPPOSITE.

7. END PANELS OF SLIDEOUT ROOMS WILL BE PAINTED WITH BASECOAT AND CLEAR COAT ONLY. THERE WILL BE NO COLORED DESIGN GRAPHIC ELEMENTS PAINTED ON THE END PANELS.

6. APPLY SEALER BODY SEAM CLEAR 94401-04-000 TO HELP SECURE EDGES.

5. USE 145487-02-000 (100 FT) TO COVER UNSEALED ROOF SEAMS.

4. CLEAR COAT TO BE APPLIED ON ENTIRE UNIT TO PROTECT PAINT.

3. TOLERANCE FOR DIMENSIONS IS +/-20mm.
LOGO IS TO BE +/- 1mm ON A HORIZONTAL PLANE (END TO END).

2. APPLY FILM-URETHANE PROTECTANT 109506-01-000 AT BOTTOM OF ENTRANCE DOOR TO PREVENT SCUFFMARKS.

1. APPLY PROTECTOR 116424-01-000 TO WATER HEATER DOOR LATCH.

(27A) 27A EXT FULL BODY PAINT PKG #1
(92A) 92A EXT FULL BODY PAINT PKG #2
(24C) 24C EXT FULL BODY PAINT PKG #3
(24B) 24C EXT FULL BODY PAINT PKG #4

WINNEBAGO INDUSTRIES

COPYRIGHT 2009
WINNEBAGO
INDUSTRIES, INC.

ORIG. DATE 10/21/08
FIRST USED 10 700 SER (ASPECT)
MATERIAL:

SPECIFICATION PRINT
DO NOT SCALE

TITLE: GRAPHICS INSTL - FBP

SHEET 1 OF 2 | PART NO 171737 | REV

REF 1 06/19/09

DWG NO 171737

(27A) **GRAPHICS INST - 2010 ASPECT FBP**
"CHARCOAL"

(92A) **GRAPHICS INST - 2010 ASPECT FBP**
"MALCHITE"

(24C) **GRAPHICS INST - 2010 ASPECT FBP**
"GARNET"

(24B) **GRAPHICS INST - 2010 ASPECT FBP**
"CITRUS GOLD"

FIRST USED
2010 700 SERIES (ASPECT)

SPECIFICATION PRINT
DO NOT SCALE

TITLE:
GRAPHICS INSTL - FBP

SHEET 2 | PART NO 171737 | REV

DWG NO	UNIT	A	B	C	D	E	F	G	H
171738-01	728B	680	835	1350	1125	25	125	145	180
171738-02	730C	650	890	1390	1115	140	140	180	180

RELEASE	REV A	DATE 10--23--08	DWG NO 171738
REV	ZONE	REVISION RECORD	DATE / DFTR.ORIG

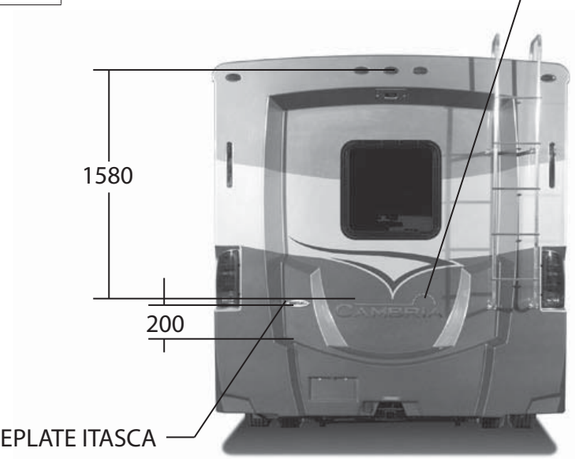

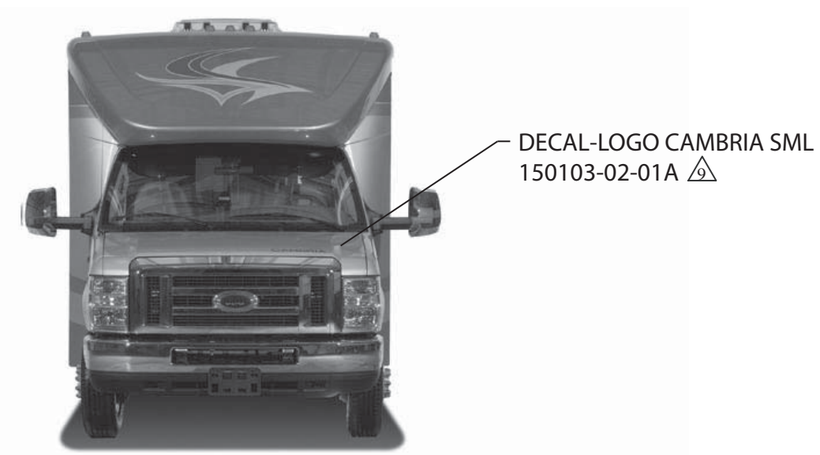

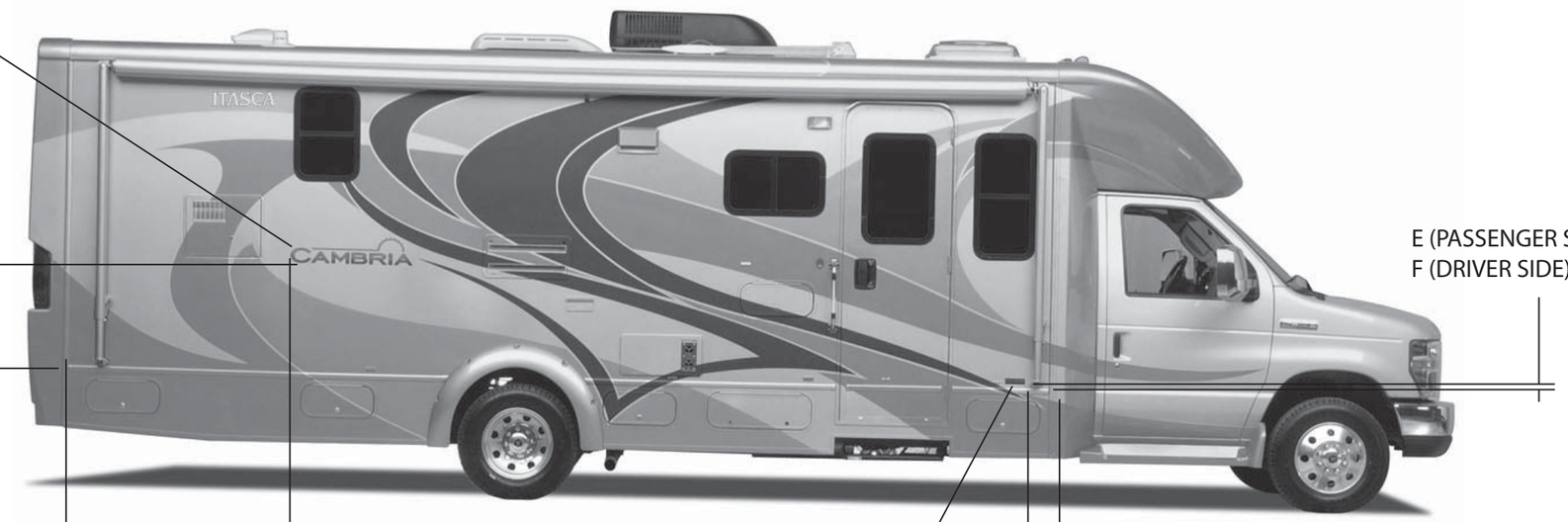

10 CENTER ON SURFACE.

9 LOCATE DECAL 120MM RIGHT OF HOOD EMBLEM AND 70MM UP FROM GRILLE.

8. PASSENGER SIDE OF UNIT SHOWN, DRIVER'S SIDE OPPOSITE.

7. END PANELS OF SLIDEOUT ROOMS WILL BE PAINTED WITH BASECOAT AND CLEAR COAT ONLY. THERE WILL BE NO COLORED DESIGN GRAPHIC ELEMENTS PAINTED ON THE END PANELS.

6. APPLY SEALER BODY SEAM CLEAR 94401-04-000 TO HELP SECURE EDGES.

5. USE 145487-02-000 (100 FT) TO COVER UNSEALED ROOF SEAMS.

4. CLEAR COAT TO BE APPLIED ON ENTIRE UNIT TO PROTECT PAINT.

3. TOLERANCE FOR DIMENSIONS IS +/-20mm.
LOGO IS TO BE +/- 1mm ON A HORIZONTAL PLANE (END TO END).

2. APPLY FILM-URETHANE PROTECTANT 109506-01-000 AT BOTTOM OF ENTRANCE DOOR TO PREVENT SCUFFMARKS.

1. APPLY PROTECTOR 116424-01-000 TO WATER HEATER DOOR LATCH.

NOTES:

(27A) 27A EXT FULL BODY PAINT PKG #1
(92A) 92A EXT FULL BODY PAINT PKG #2
(24C) 24C EXT FULL BODY PAINT PKG #3
(24B) 24C EXT FULL BODY PAINT PKG #4

WINNEBAGO INDUSTRIES

COPYRIGHT 2009
WINNEBAGO
INDUSTRIES, INC.

ORIG. DATE 10/21/08
FIRST USED 10 700 SER (CAMBRIA)
MATERIAL:

SPECIFICATION PRINT
DO NOT SCALE

TITLE: GRAPHICS INSTL - FBP

SHEET 1 OF 2 | PART NO 171738 | REV

REF 1 06/19/09

DWG NO 171738

(27A) **GRAPHICS INST - 2010 CAMBRIA FBP**
"SANDSTONE"

(92A) **GRAPHICS INST - 2010 CAMBRIA FBP**
"DEEP POOL"

(24C) **GRAPHICS INST - 2010 CAMBRIA FBP**
"HARVEST FROST"

(24B) **GRAPHICS INST - 2010 CAMBRIA FBP**
"HOT RED"

FIRST USED
2010 700 SERIES (CAMBRIA)

SPECIFICATION PRINT
DO NOT SCALE

TITLE:
GRAPHICS INSTL - FBP

SHEET 2 | PART NO 171738 | REV

DWG NO 167048

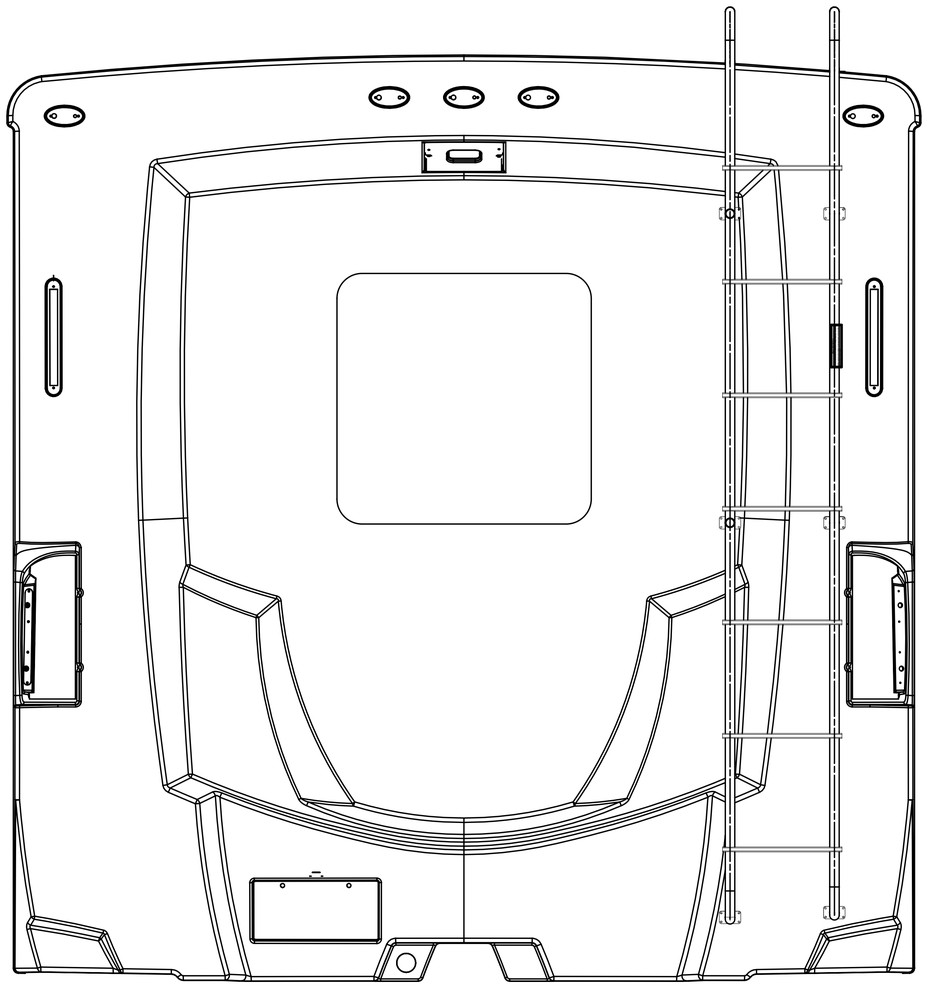

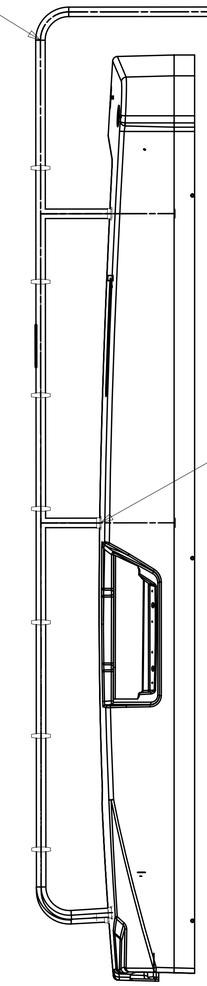

FIRST USED	09 700 SERIES
	DO NOT SCALE DRAWING
TITLE:	LADDER INSTL
SHEET 1	PART NO 167048 REV

10/1/2009

DWG NO	
172228-01	WIN
172228-02	ITA

RELEASE	REV A	DATE	DWG NO 172228
REV	ZONE	REVISION RECORD	DATE / DFTR-ORIG

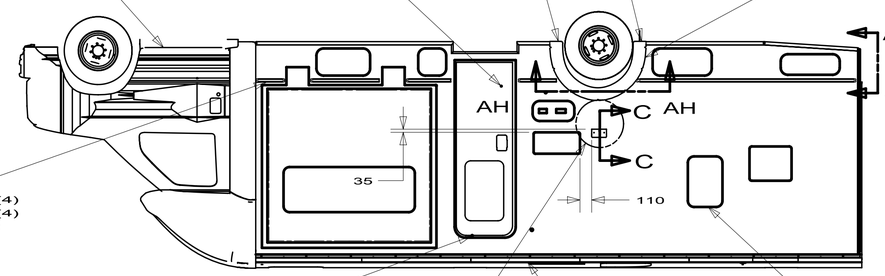

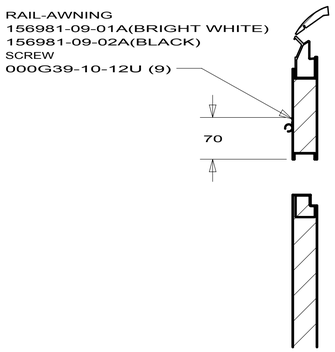

SECTION A-A

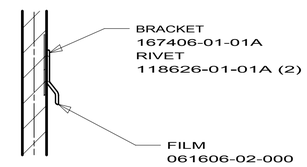

SECTION C-C

10A

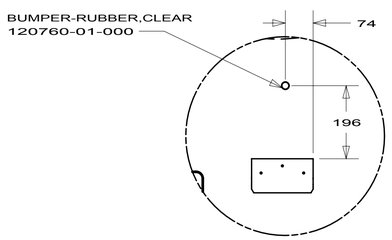

DETAIL B

10A

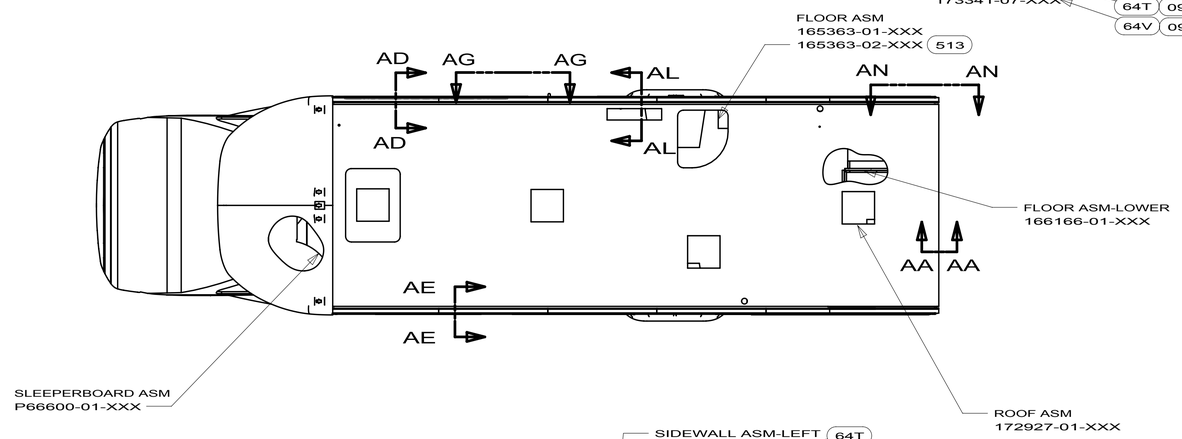

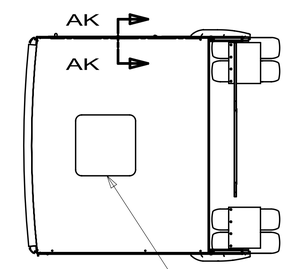

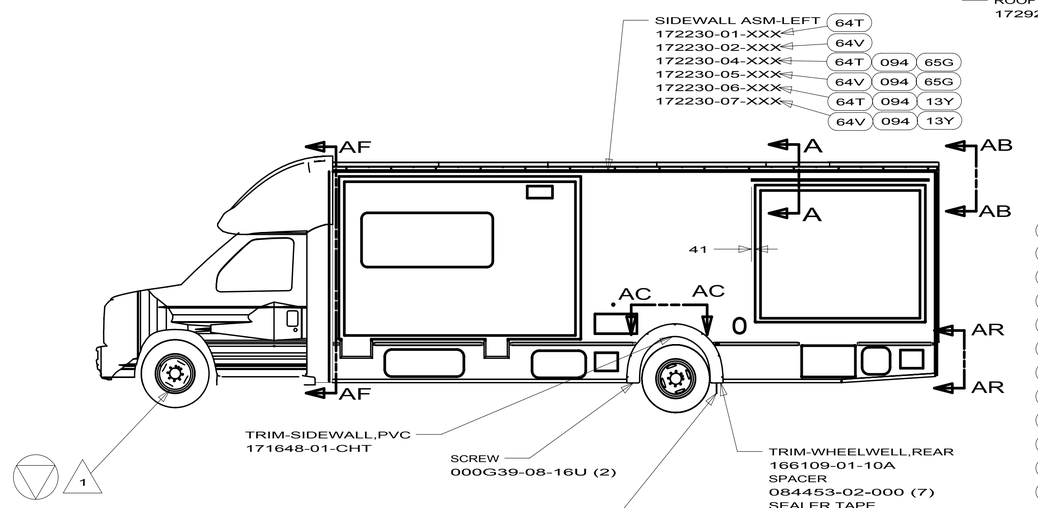

INDICATES CRITICAL SAFETY PROCEDURE TO BE FOLLOWED

094	WINDOWS - SE-GI
64T	SIDEWALLS-HIGH GLOSS
64V	SIDEWALL-PREMIUM HIGH GLOSS
513	FLOORCOVERING-VINYL-THRU OUT
92K	EXTERIOR GRAPHICS PACKAGE #2
27G	EXTERIOR GRAPHICS PACKAGE #1
92A	EXT FULL BODY PAINT PKG # 2
27A	EXT FULL BODY PAINT PKG #1
63J	WHEEL LINERS-STAINLESS STEEL
63W	WHEELS-STYLIZED CHROME
54W	WHEELS-STYLIZED ALUMINUM
935	MUD FLAPS - REAR
ITA	ITASCA ONLY
WIN	WINNEBAGO ONLY
10A	TV (REAR)-20"COLOR, STEREO
65G	WINDOW COACH-SINGLE PANE
13Y	WINDOWS-COACH-DUAL PANE

NOTES:

1. FOR WHEEL COVERS, LINERS,VALVE EXTENSIONS, STABLILIZERS, ALUMINUM WHEEL COVERS AND FOR TIGHTENING OF LUG NUTS SEE WHEEL INSTL DWG CALLED OUT ON TOP LEVEL DRAWING. 63J 63W 54W

2. SEE BODY INSTL-SECTIONS DRAWING FOR SECTIONS AA THRU AZ.

3. MUDFLAPS AND/OR ROCKGUARDS TO BE 40mm MIN FROM TIRES WHEN INSTALLED.

4. APPLY URETHANE ADHESIVE TO TOP OF CHASSIS FLOOR FRAME STRUCTURE PER ES0077.

5. POSITION BUMPER ON DOOR FRAME SO THAT IT WILL MAKE CONTACT WITH THE AWNING ARM.

6. POSITION BUMPER ON DOOR SO THAT IT WILL MAKE CONTACT WITH SLIDEOUT TRIM.

COPYRIGHT 2010
WINNEBAGO
INDUSTRIES, INC.

DFTR	ORIG. DATE
CHKR	ALL DIMENSIONS ARE IN MILLIMETERS
P.E.	
M.E.	FIRST USED
DSNR	10 730C

UNSPECIFIED TOLERANCES ARE:
WHOLE DIM (X) : 3
ONE-PLACE (X.X) : 1.5
TWO-PLACE (X.XX) : 0.50
ANGLE : 1°

MATERIAL:

THIRD ANGLE PROJECTION

DO NOT SCALE DRAWING

REFER TO ES0018 FOR FASTENER TIGHTENING GUIDELINES

TITLE:
BODY INSTL-PANEL & TRIM

SHEET 1 OF 1 | PART NO 172228 | REV

REF:

4/29/2010

REV	ZONE	REVISION RECORD	DATE	DFTR-ORIG
		REV DATE	DWG NO 140923	

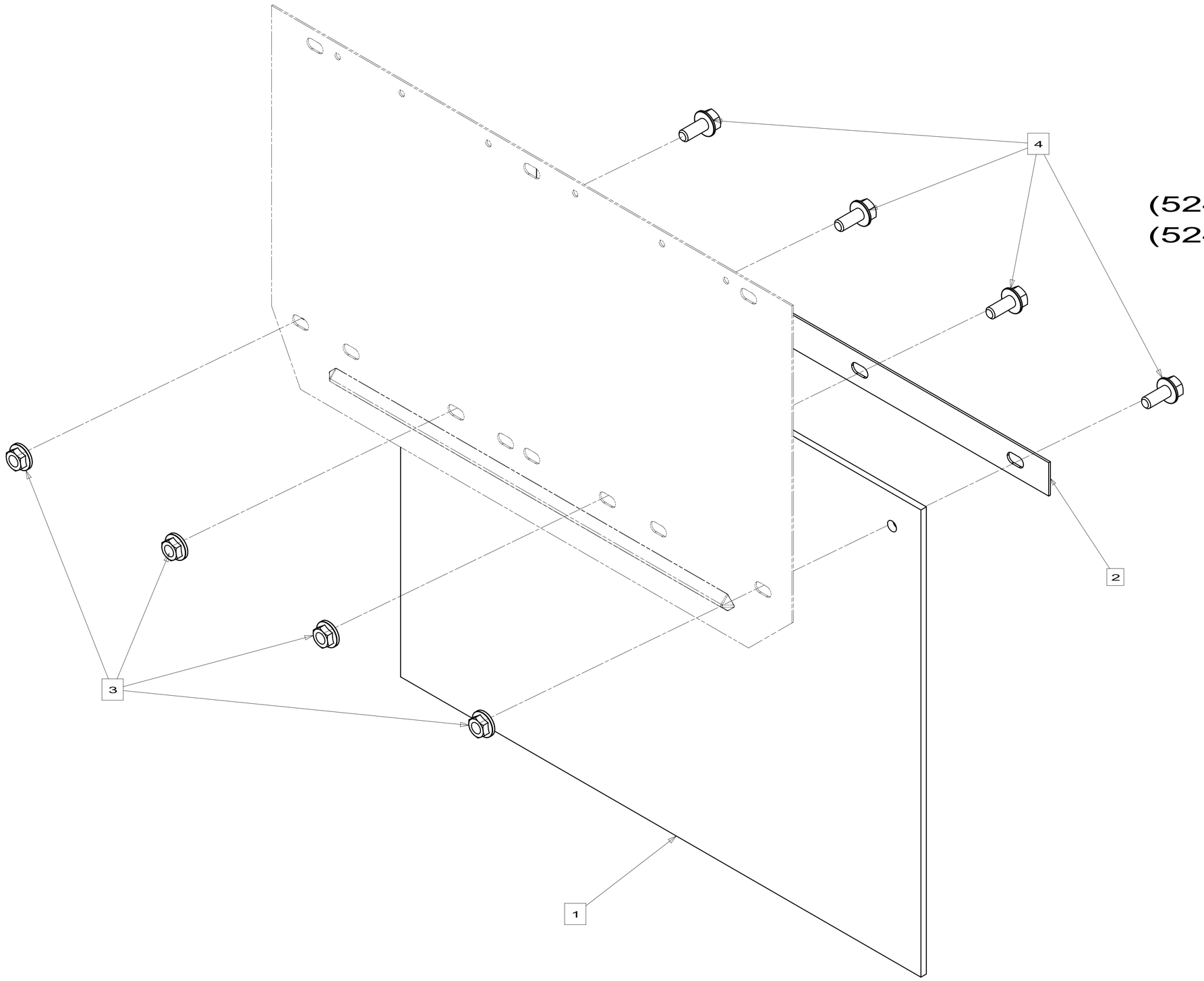

140923-01
331C
500-SERIES
(524A PASSENGER)
(524K PASSENGER)
700-SERIES
D-SERIES
E-SERIES
H SERIES
J SERIES

ITEM	PART NUMBER	DESCRIPTION	QTY
4	000C260512U	BOLT	4
3	000D390500U	NUT	4
2	14092201CHT	PLATE-MUDFLAP	1
1	01751601000	MUD FLAP-BLACK	1

WINNEBAGO INDUSTRIES

COPYRIGHT 2010
WINNEBAGO
INDUSTRIES, INC.

DFTR | ORIG. DATE
CHKR
P.E.
M.E.
DSNR

ALL DIMENSIONS ARE IN MILLIMETERS

FIRST USED
02 MOTORHOMES

UNSPECIFIED TOLERANCES ARE:
WHOLE DIM (X) ±
ONE-PLACE (X.X) ±
TWO-PLACE (X.XX) ±
ANGLE ±

MATERIAL:

THIRD ANGLE PROJECTION

DO NOT SCALE DRAWING

TITLE:
MUD FLAP COMPL

SHEET 1 OF 5 | PART NO 140923 | REV

REF: 1

2/16/2010

RELEASE	REV A	DATE 04--26--04	DWG NO 151642
REV	ZONE	REVISION RECORD	DATE / DFTR-ORIG

DWG NO	SHEET	CHASSIS	SERIES	WHEEL	RUNNING BOARD (RH)	RUNNING BOARD (LH)
151642-01	1	FORD	300/400	FLAIR	149604-01-CHT	149604-02-CHT
151642-02	2	CHEVY	300	FLAIR	149604-10-CHT	149604-11-CHT
151642-03	1	FORD	300/400	MUDFLAP	149604-01-CHT	149604-02-CHT
151642-04	2	CHEVY	300	MUDFLAP	149604-10-CHT	149604-11-CHT
151642-05	1	FORD	700	FLAIR	149604-03-CHT	149604-04-CHT
151642-06	2	CHEVY	700	FLAIR	149604-17-CHT	149604-18-CHT
151642-07	1	FORD	700	MUDFLAP	149604-03-CHT	149604-04-CHT
151642-08	2	CHEVY	700	MUDFLAP	149604-17-CHT	149604-18-CHT
151642-09	1	FORD	700	FLAIR	149604-19-CHT	149604-20-CHT
151642-10	1	FORD	700	MUDFLAP	149604-19-CHT	149604-20-CHT

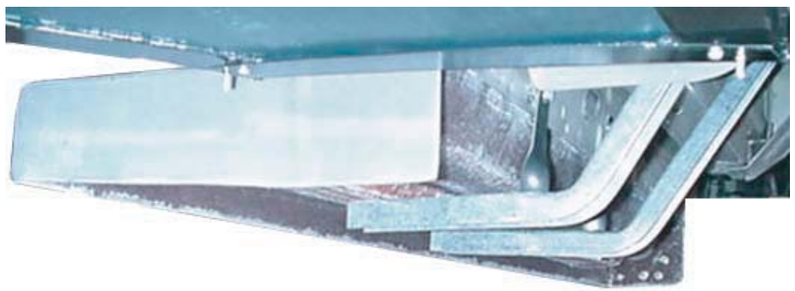

---> FRONT OF VEHICLE

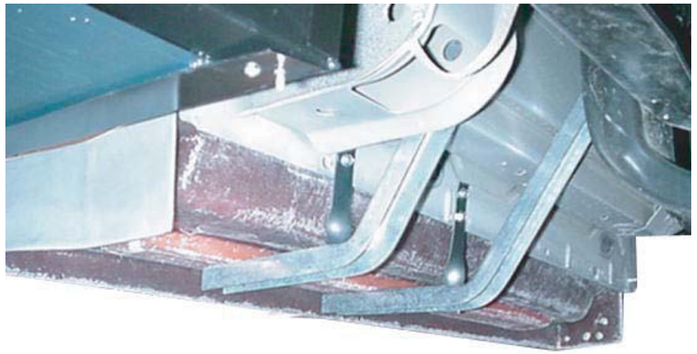

445

750

SEE TAB

RUNNING BOARD-GLASS
(SEE TAB)
MUDFLAP
149604-05-CHT (RH)
149604-06-CHT (LH)
FLAIR
149604-07-CHT (RH)
149604-08-CHT (LH)
MAT-ANTI SLIP
146515-03-CHT (RH)
146515-04-CHT (LH)
HARDWARE KIT
149604-09-CHT

NOTES:

1. LEFT SIDE SHOWN, RIGHT SIDE IS OPPOSITE.

WINNEBAGO INDUSTRIES

COPYRIGHT 2008
WINNEBAGO
INDUSTRIES, INC.

ORIG. DATE 04/19/04

FIRST USED 06 300, 400 & 700 SERIES

MATERIAL:

SPECIFICATION PRINT
DO NOT SCALE

TITLE: RUNNING BOARD INSTL

SHEET 1 OF 2 | PART NO 151642 | REV

1/13/09

DWG NO 151642

LEFT SIDE

DRILL 9mm HOLE
CENTER ON CHANNEL
DOWN FROM TOP 150
ADD TEC SCREW

RIGHT SIDE

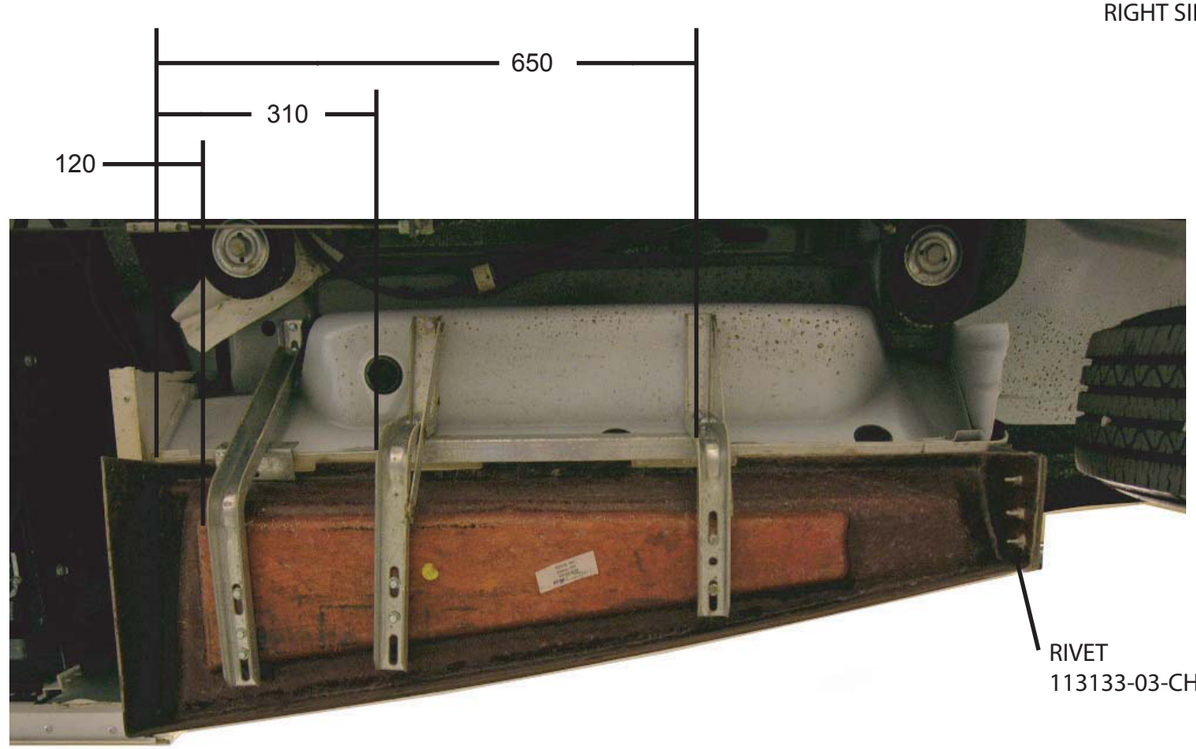

LEFT SIDE SHOWN, RIGHT SIDE OPPOSITE

RUNNING BOARD-GLASS
(SEE TAB)
SEE TAB:
MUDFLAP
149604-14-CHT (RH)
149604-15-CHT (LH)
FLAIR
149604-12-CHT (RH)
149604-13-CHT (LH)
MAT-ANTI SLIP
146515-03-CHT (RH)
146515-04-CHT (LH)
HARDWARE KIT
149604-16-CHT

FIRST USED	07 300 & 700 SERIES
	SPECIFICATION PRINT DO NOT SCALE
TITLE:	RUNNING BOARD INSTL
SHEET 2	PART NO 151642 REV

DWG NO 165366

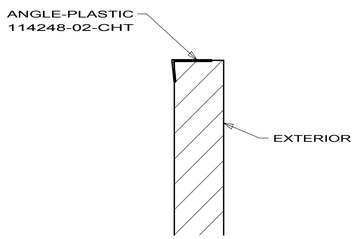

SECTION BA-BA

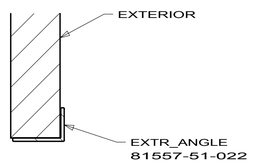

SECTION BB-BB

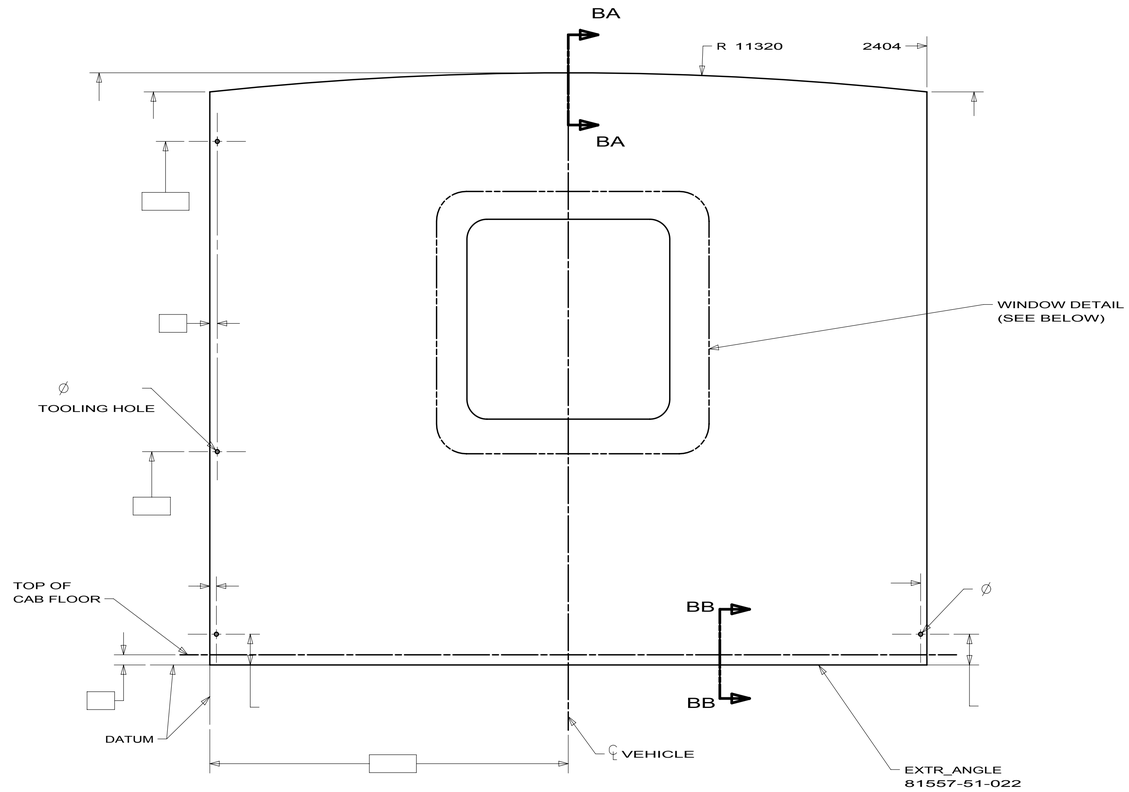

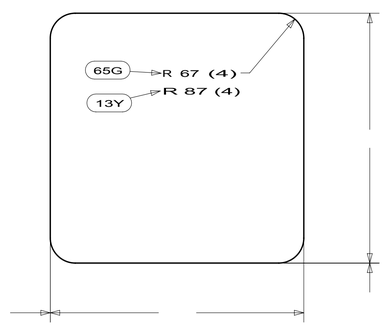

WINDOW DETAIL BC-BC

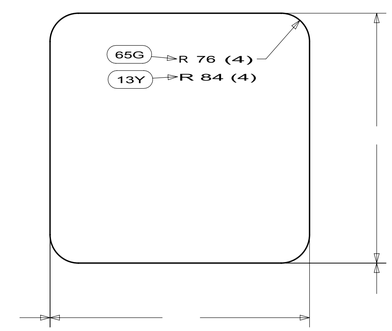

WINDOW DETAIL BD-BD

NOTES:

8. THRU EXTERIOR SKIN ONLY.
7. THRU FOAM AND INNER PANEL.
6. ALL RAII 9.5 UNLESS OTHERWISE SPECIFIED.
5. THRU FOAM AND EXTERIOR SKIN.
4. ALL WIRES SHOWN DENOTE ROUTED PATH.
3. TOLERANCE FOR CUTOUT ±1.5, WIRING ±2.5, WIRE DROPS +150.0/-0..
2. CAP SEAL TRIM WITH SEALANT 72889-20-000.
1. PANEL SHOWN FROM EXTERIOR SIDE.

13Y WINDOWS-COACH-DUAL PANE
65G WINDOW COACH-SINGLE PANE

NOTICE

CHANGES TO THIS SHEET
MAY AFFECT OTHERS

FIRST USED	09 730C
	DO NOT SCALE DRAWING
TITLE:	BACKWALL ASM
SHEET 2	PART NO 165366 REV

DWG NO 172230

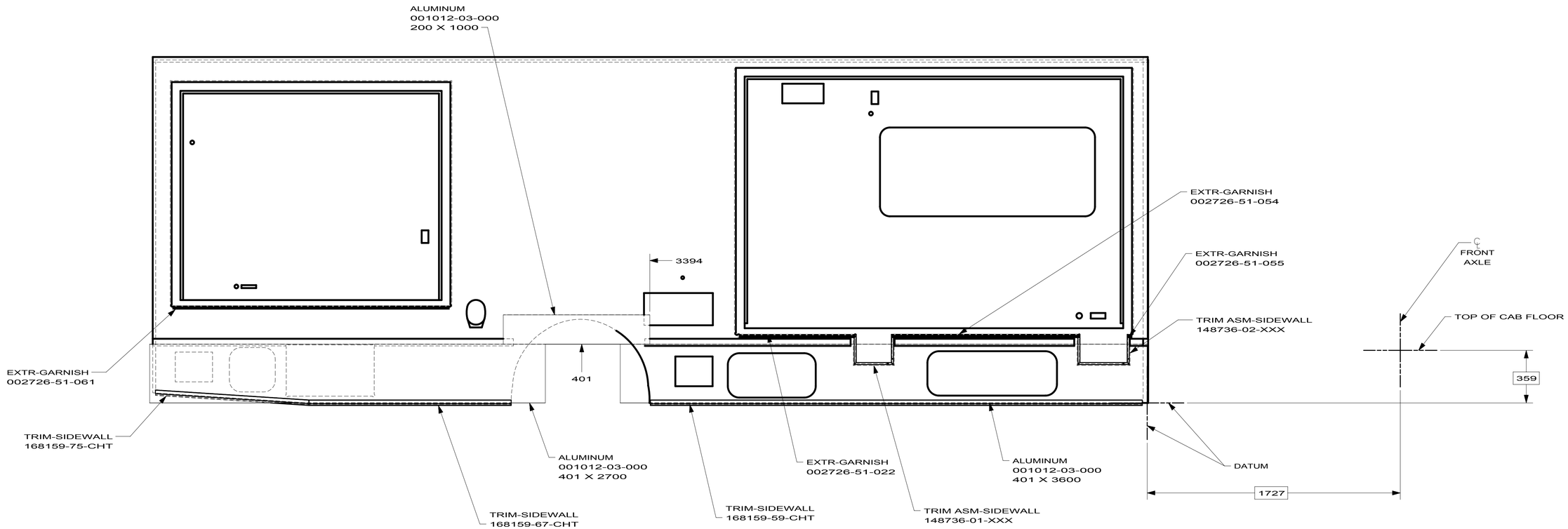

FIRST USED	10 730C
DO NOT SCALE DRAWING	
TITLE:	SIDEWALL ASM-LEFT
SHEET 8	PART NO 172230 REV

4/20/2010

DWG NO 173341

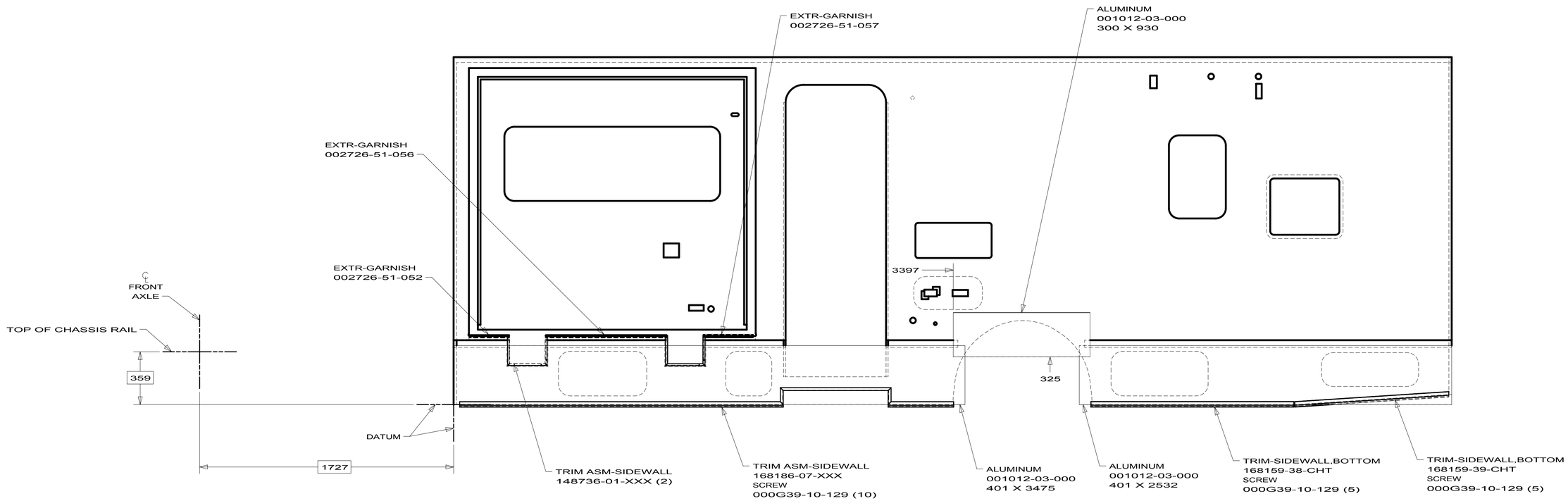

FIRST USED	10 730C
	DO NOT SCALE DRAWING
TITLE:	SIDEWALL ASM-RIGHT
SHEET 8	PART NO 173341 REV

4/20/2010

DWG NO	SHEET	CHASSIS	SERIES	WHEEL	RUNNING BOARD (RH)	RUNNING BOARD (LH)
173679-01	1	FORD	300	FLAIR	173458-01-CHT	173458-02-CHT
173679-02	1	FORD	700	FLAIR	173458-03-CHT	173458-04-CHT

RELEASE REV A DATE 04--27--09 DWG NO 173679

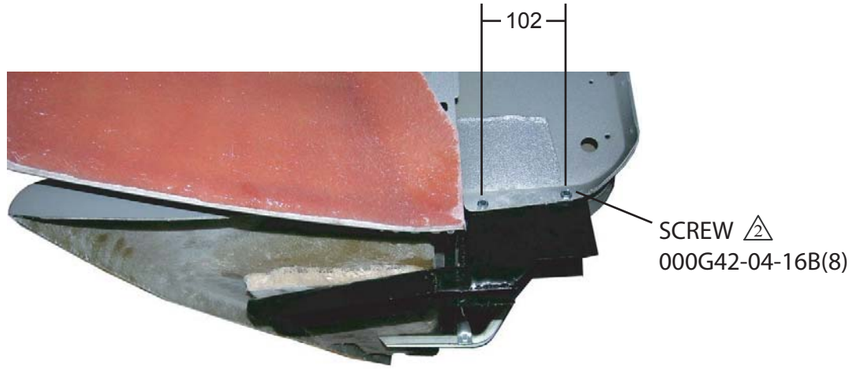

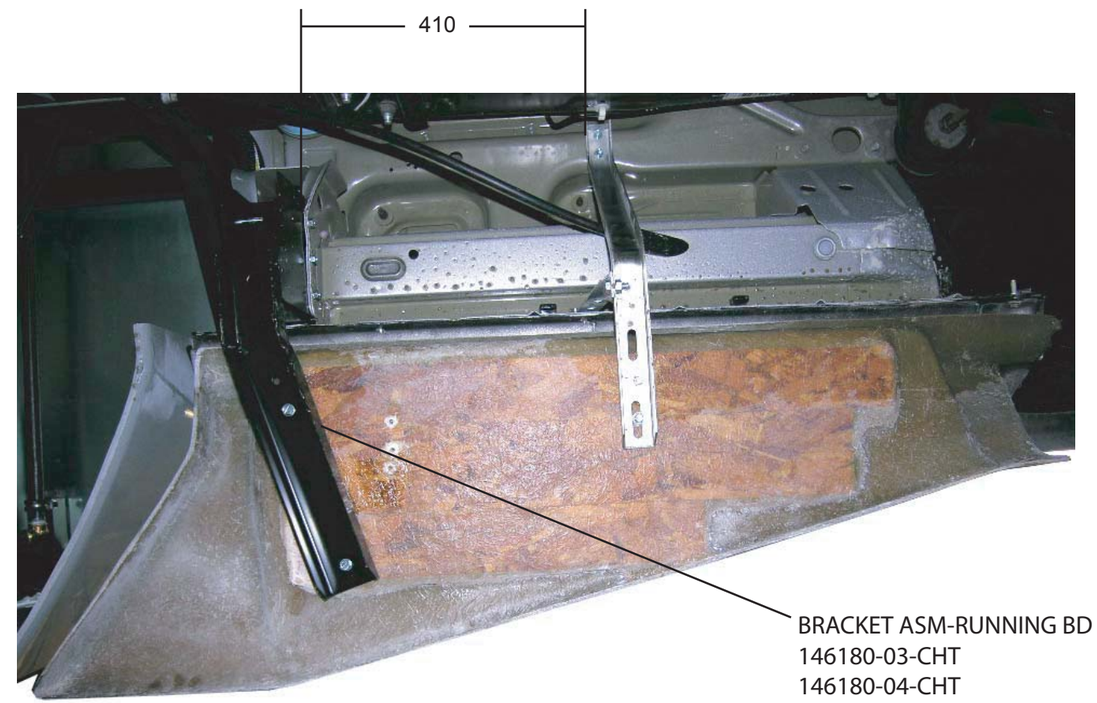

---> FRONT OF VEHICLE

RUNNING BOARD-GLASS
(SEE TAB)
MAT-ANTI SLIP
146515-05-CHT (RH)
146515-06-CHT (LH)
HARDWARE KIT
173458-05-000 (UP TO 07-07-09)
149604-09-000 (QTY 0.50) (AFTER 07-08-09)

⚠2 STRAIGHTEN CAB FLANGE ENOUGH TO FASTEN SCREW AT GIVEN DIMENSION.

1. LEFT SIDE SHOWN, RIGHT SIDE IS OPPOSITE.

NOTES:

WINNEBAGO INDUSTRIES

COPYRIGHT 2009
WINNEBAGO
INDUSTRIES, INC.

ORIG. DATE 04/27/09

FIRST USED 10 300 SERIES

MATERIAL: .

SPECIFICATION PRINT
DO NOT SCALE

TITLE: RUNNING BOARD INSTL

SHEET 1 OF 1 | PART NO 173679 | REV

07/23/09

DWG NO	PANEL ASM	
166963-01	165754-03	1H4 1A5
166963-02	165754-04	1H4 74B

RELEASE	REV A	DATE	DWG NO 166963

REV	ZONE	REVISION RECORD	DATE	DFTR-ORIG
B	B-7	SHORTENED TRIM CALLOUT BY 50.00 MM	12/07/07	8107

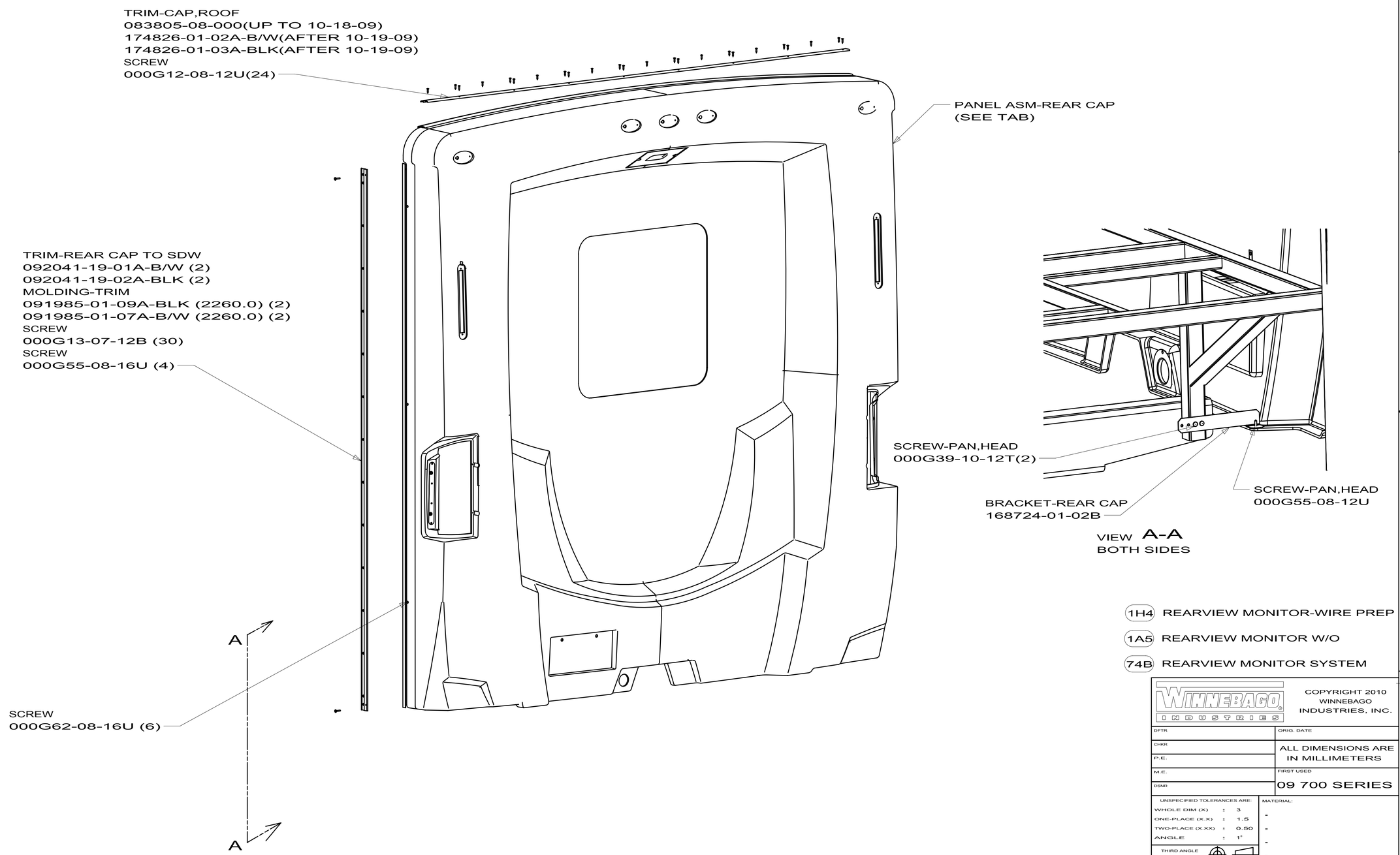

1H4 REARVIEW MONITOR-WIRE PREP

1A5 REARVIEW MONITOR W/O

74B REARVIEW MONITOR SYSTEM

WINNEBAGO INDUSTRIES

COPYRIGHT 2010
WINNEBAGO
INDUSTRIES, INC.

DFTR	ORIG. DATE
CHKR	ALL DIMENSIONS ARE IN MILLIMETERS
P.E.	
M.E.	FIRST USED
DSNR	09 700 SERIES

UNSPECIFIED TOLERANCES ARE:		MATERIAL:
WHOLE DIM (X)	± 3	-
ONE-PLACE (X.X)	± 1.5	-
TWO-PLACE (X.XX)	± 0.50	-
ANGLE	± 1°	-
THIRD ANGLE PROJECTION		-
DO NOT SCALE DRAWING		REFER TO ES0018 FOR FASTENER TIGHTENING GUIDELINES

TITLE:
REAR CAP-INSTL

SHEET 1 OF 1	PART NO 166963	REV

REF: 1

NOTES:

4/21/2010

DWG NO	----	PANEL-REAR CAP	SHEET
165754-01	PANEL-REAR CAP W/O CAMERA	---	1,3
165754-02	PANEL-REAR CAP W/CAMERA	---	1,3
165754-03	PANEL ASM-REAR CAP W/O CAMERA	165754-01	2
165754-04	PANEL-ASM REAR CAP W/CAMERA	165754-02	2

1H4 1A5

1H4 74J

RELEASE	REV A	DATE	DWG NO 165754

REV	ZONE	REVISION RECORD	DATE	DFTR-ORIG
B	D-8	ADDED TAB BLOCK.	07/24/07	8107

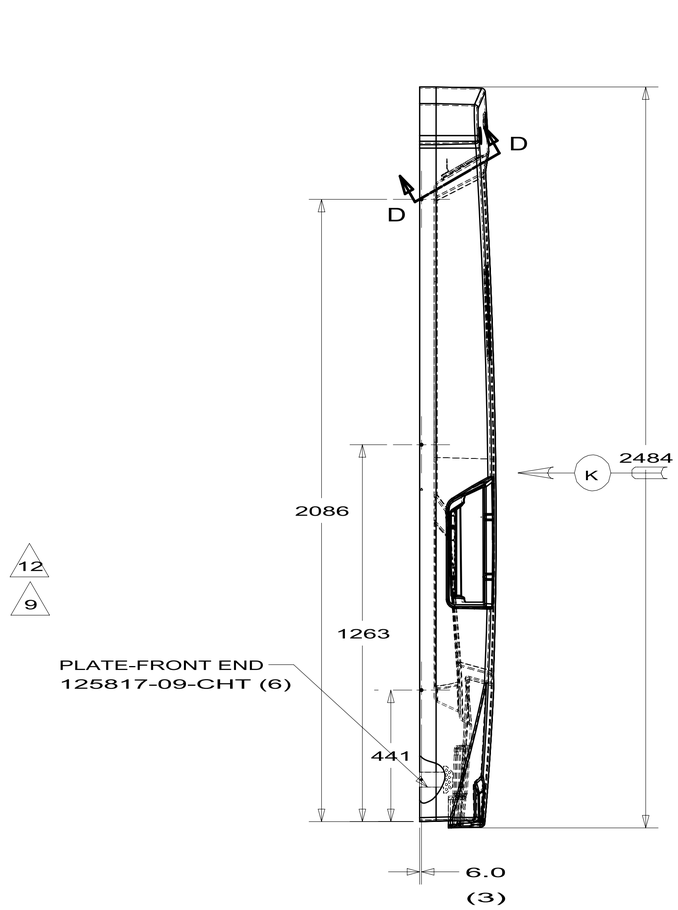

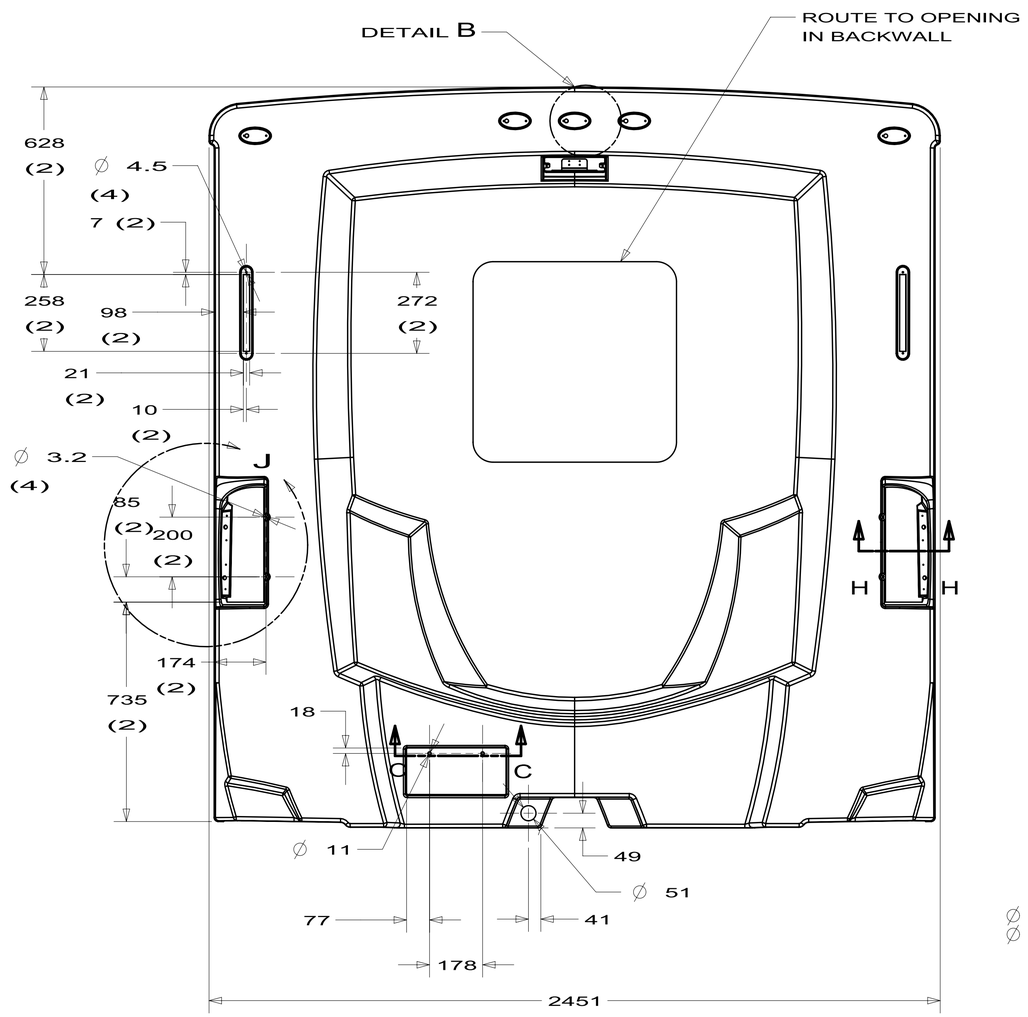

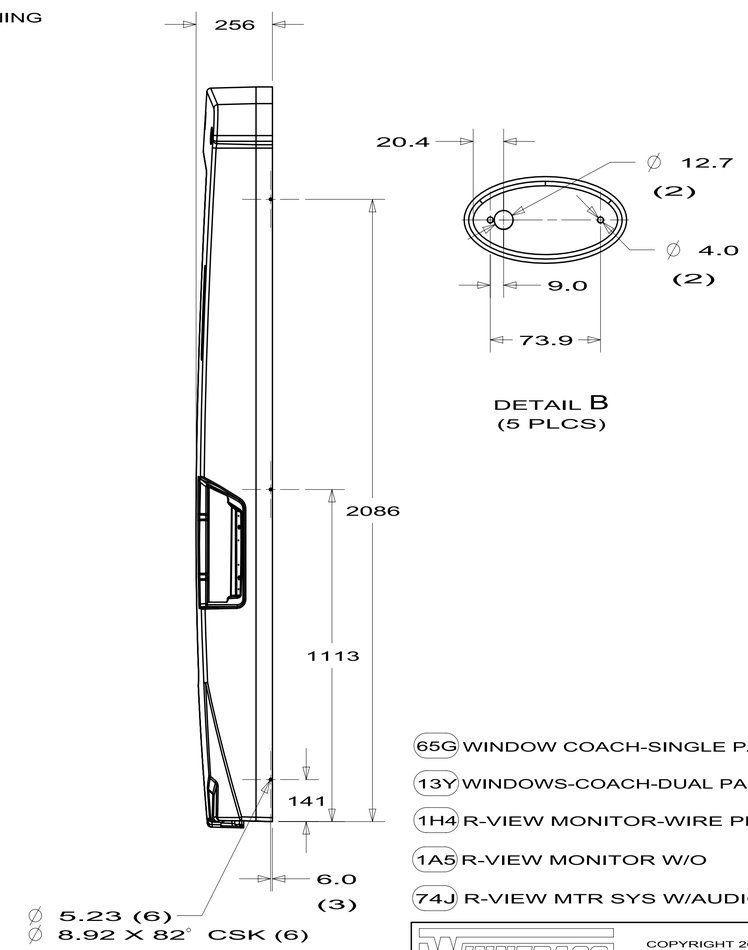

65G WINDOW COACH-SINGLE PANE

13Y WINDOWS-COACH-DUAL PANE

1H4 R-VIEW MONITOR-WIRE PREP

1A5 R-VIEW MONITOR W/O

74J R-VIEW MTR SYS W/AUDIO

NOTES:

7. MOLDED FEATURE LINE TOLERANCE ±0.5% WITH MAXIMUM TOLERANCE OF ±3.5 UNLESS OTHERWISE SPECIFIED. TRIM DIMENSION TOLERANCE ±1.5.

6. TRIMMED EDGE IS DEFINED ON THE MOLD UNLESS OTHERWISE SPECIFIED.

5. TOTAL FINISHED PART SURFACE AREA, 101.7 SQ FT.

4. MAXIMUM DRAFT ANGLE 2° .

3. USE CAB-O-CILL AS FILLER ON RADII 5 MM OR LESS.

2. WALL THICKNESS 5.0 ±1.5.

1. REMOVE ALL BURRS AND SHARP EDGES.

12. HOLE TO HOLE CENTER +- 1.5

11. USE ADHESIVE 112481-10-000 FOR BONDING PARTS.

10. SILICONE INJECTED BETWEEN FRAME AND FIBERGLASS.

9. TO BE EMBEDDED IN FIBERGLASS FLUSH WITH INSIDE SURFACE..

8. USE ADHESIVE-RESIN 112481-03-000 AND ADHESIVE-CURATIVE 112481-04-000 FOR BONDING PARTS.

SEE CHART

FOR COLOR VARIATIONS OF THIS PART

COPYRIGHT 2010
WINNEBAGO
INDUSTRIES, INC.

DFTR	ORIG. DATE
CHKR	ALL DIMENSIONS ARE IN MILLIMETERS
P.E.	
M.E.	FIRST USED 09 700
DSNR	
UNSPECIFIED TOLERANCES ARE: WHOLE DIM (X) : 3; ONE-PLACE (X.X) : 1.5; TWO-PLACE (X.XX) : 0.50; ANGLE : 1°	MATERIAL: FIBERGLASS ES0020 -
THIRD ANGLE PROJECTION	WEIGHT: 119.2 LBS.
DO NOT SCALE DRAWING	REFER TO ES0018 FOR FASTENER TIGHTENING GUIDELINES
TITLE: PANEL-REAR CAP	
SHEET 1 OF 3	PART NO 165754 REV

REF: 1

4/30/2010

DWG NO 165754

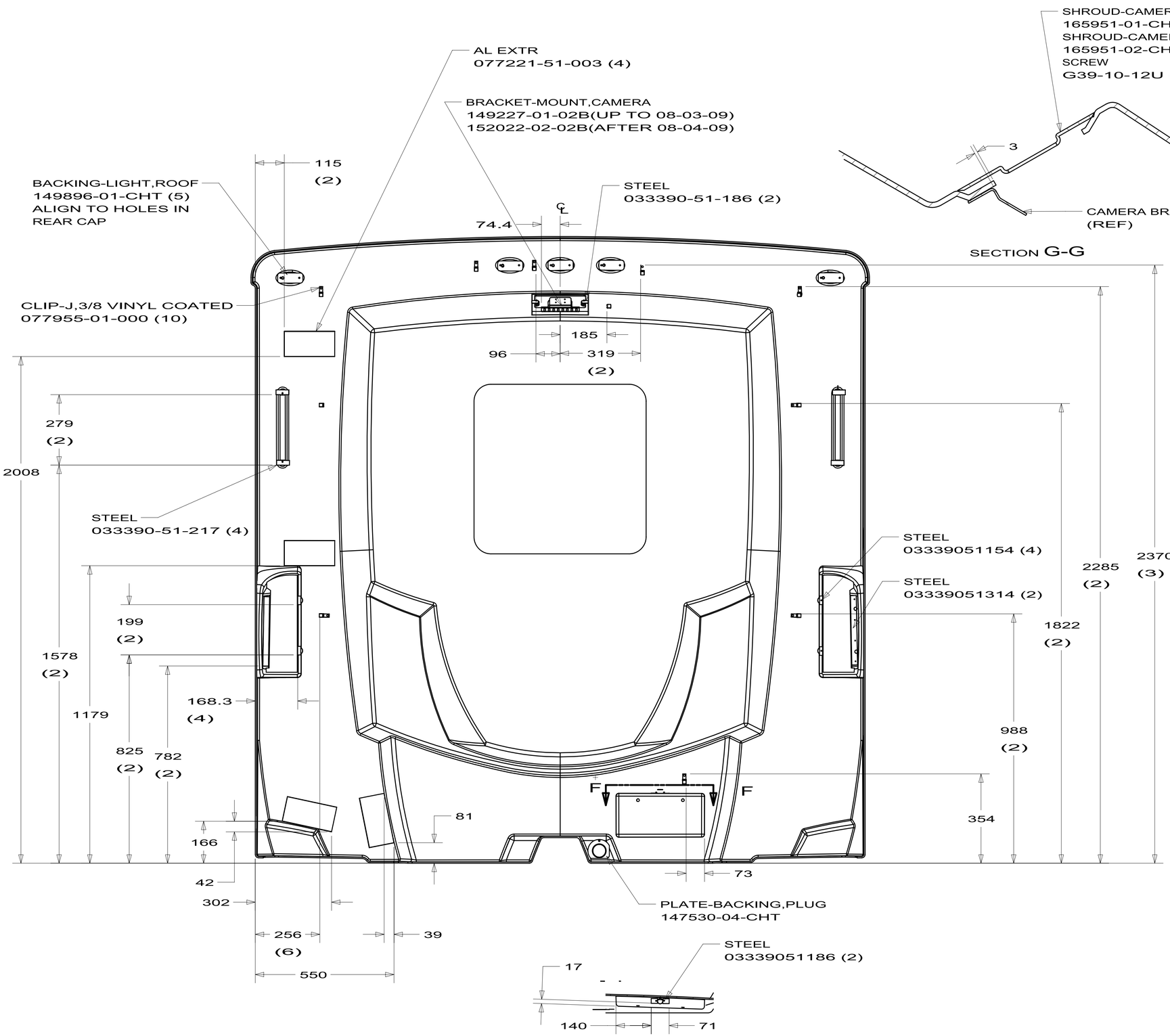

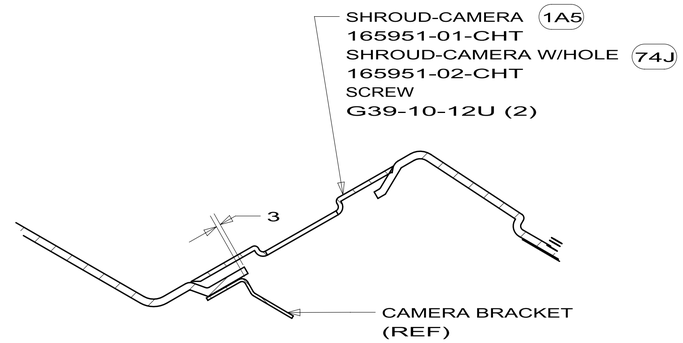

SECTION G-G

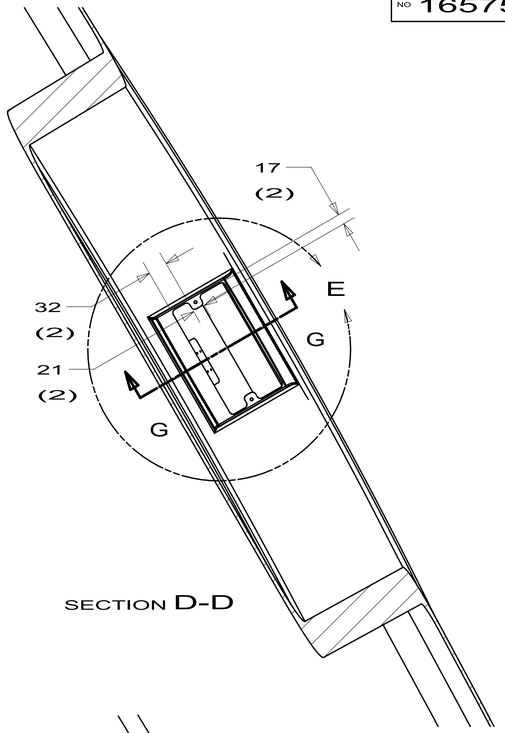

SECTION D-D

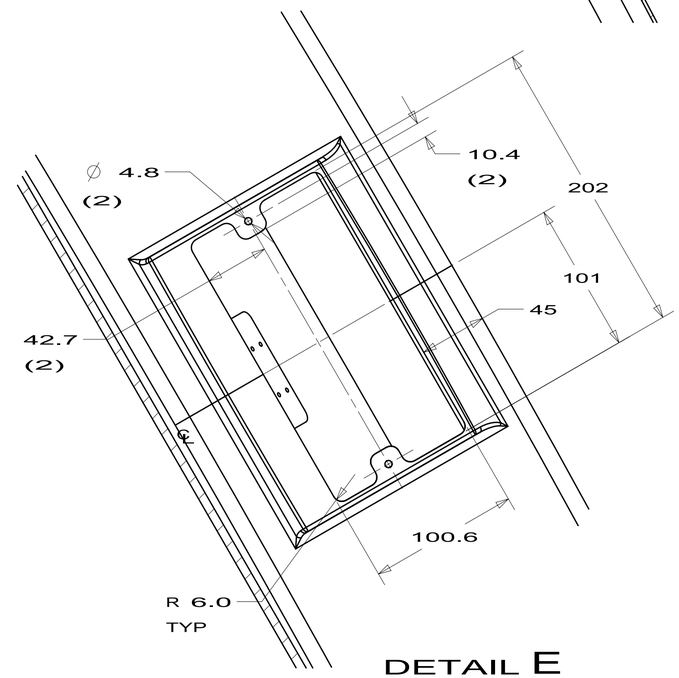

DETAIL E

FIRST USED	09 700
DO NOT SCALE DRAWING	
TITLE:	PANEL-REAR CAP
SHEET 2	PART NO 165754 REV

4/30/2010

DWG NO 165754

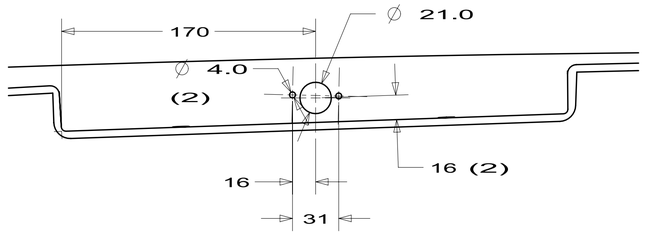

SECTION C-C

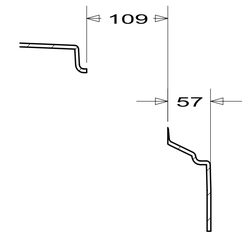

SECTION H-H

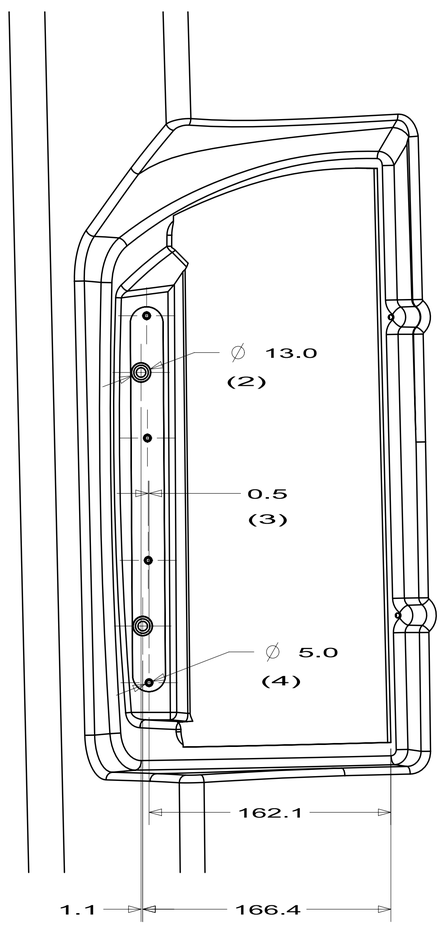

VIEW K

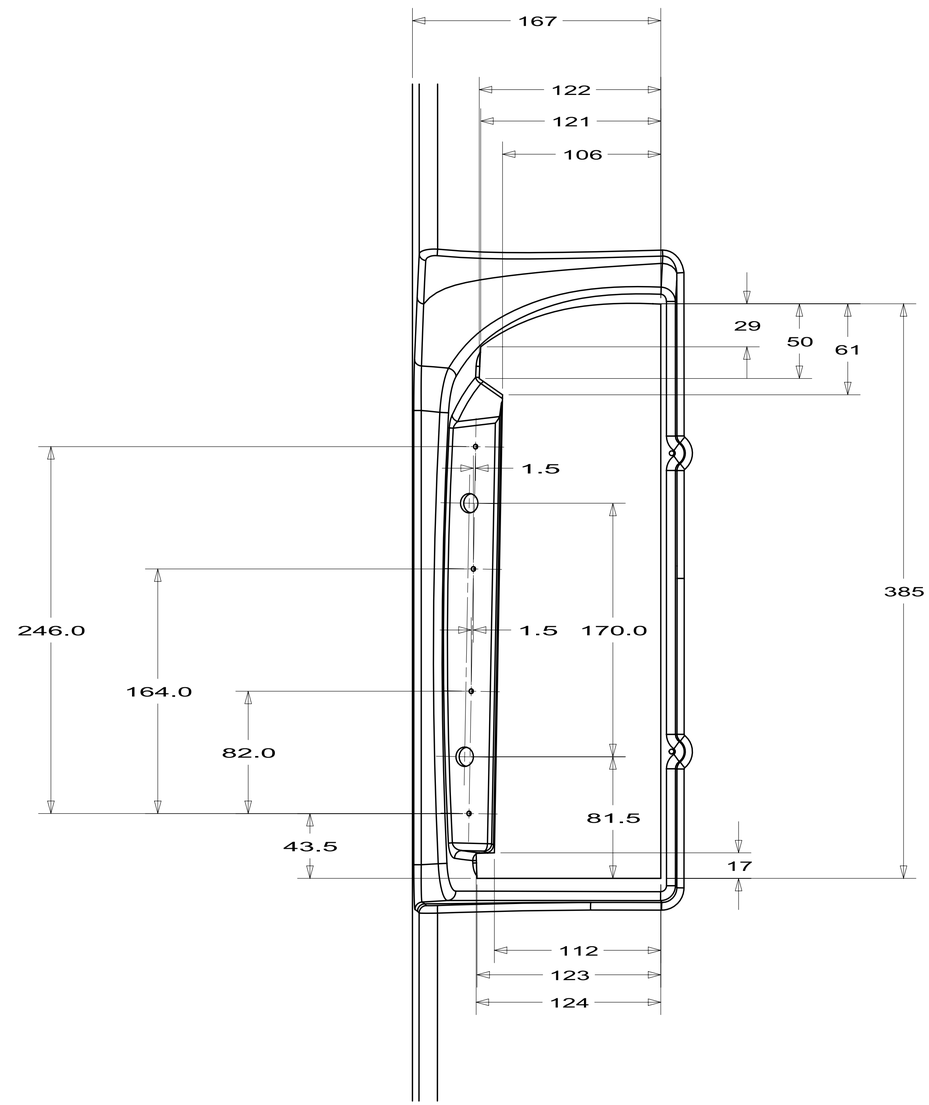

DETAIL J

LEFT HAND SHOWN
RIGHT HAND OPPSITE

FIRST USED	09 700
DO NOT SCALE DRAWING	
TITLE:	PANEL-REAR CAP
SHEET 3	PART NO 165754 REV

4/30/2010

DWG NO	ROOM ASM-SLIDEOUT	SLUG ASM-SLIDEOUT	
165356-01	165356-11-XXX	165365-11-XXX	64T
165356-02	165356-12-XXX	165365-14-XXX	64V
165356-03	165356-13-XXX	172230-11-XXX	64T
165356-04	165356-14-XXX	172230-13-XXX	64V
165356-05	165356-15-XXX	172230-15-XXX	64T 65G 094
165356-06	165356-16-XXX	172230-16-XXX	64V 65G 094
165356-07	165356-17-XXX	172230-17-XXX	64T 13Y 094
165356-08	165356-18-XXX	172230-18-XXX	64V 13Y 094
165356-09	165356-19-XXX	165365-17-XXX	64T 65G 094
165356-10	165356-20-XXX	165365-18-XXX	64V 65G 094
165356-50	165356-21-XXX	165365-19-XXX	64T 13Y 094
165356-51	165356-22-XXX	165365-20-XXX	64V 13Y 094

RELEASE	REV A	DATE	DWG NO 165356
REV	ZONE	REVISION RECORD	DATE	DFTR-ORIG

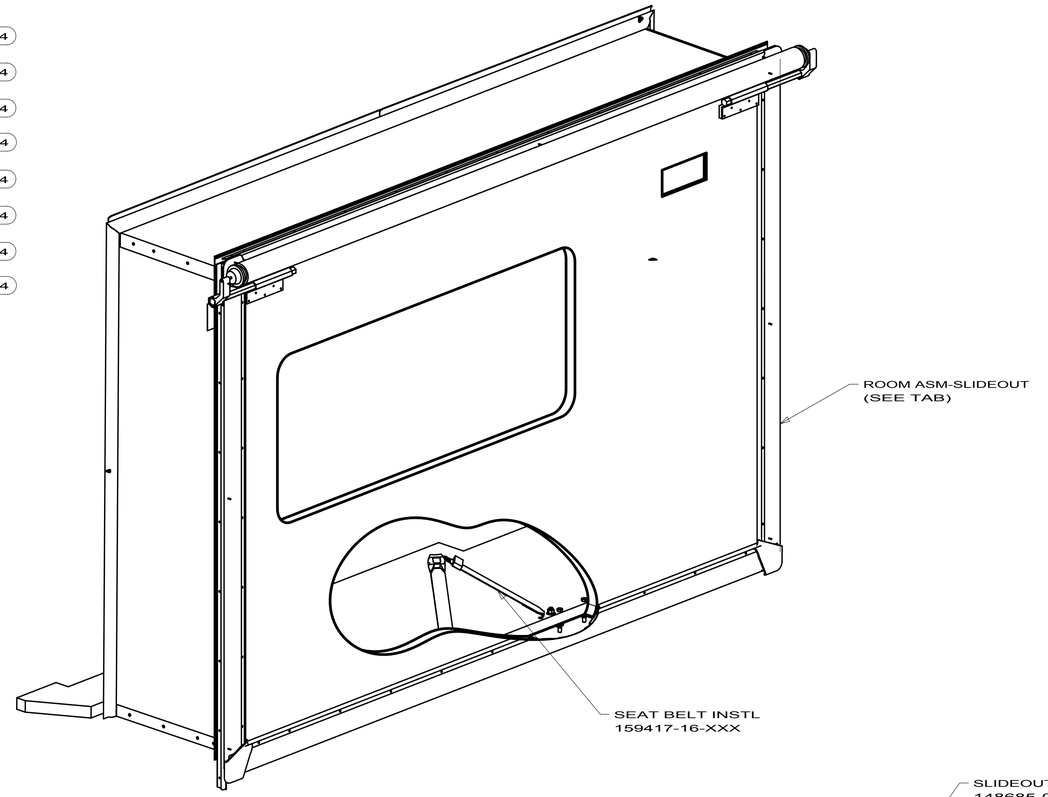

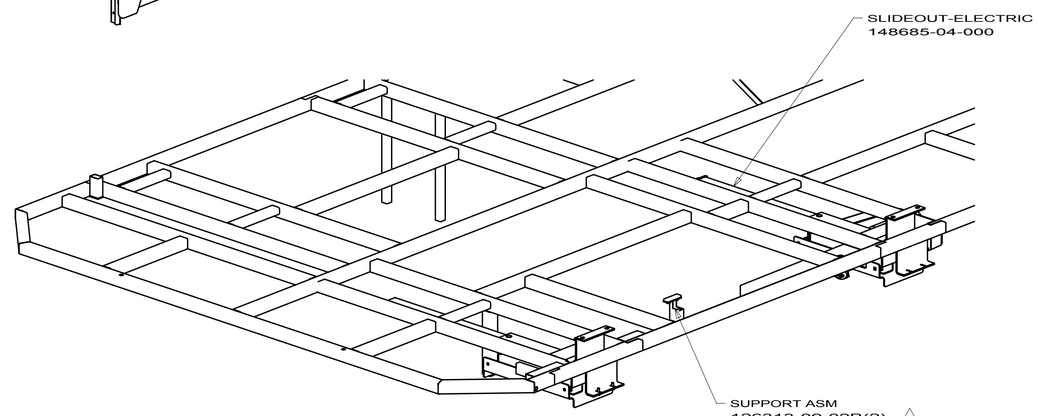

15. ADJUST BOLT TO MOVE ROOM UP OR DOWN TO CENTER ROOM IN OPENING.

14. SCREWS CAN NOT BE REUSED. ANY TIME A SCREW IS REMOVED IT MUST BE DISCARDED AND REPLACED WITH A NEW SCREW TO INSURE THE THREADS SEAL.

13. SCREWS MUST BE COUNTERSUNK 3MM BELOW SURFACE OF THE WOOD.

12. ANTI-BILLOW BRACKET TO BE INSTALLED ON REAR SIDE OF SLIDE ROOM AT 11:00 POSITION. THE SDW BLOCK IS NOT USED.

11. FOR MANUAL CYCLE ROOM, LIFT LEVER TO UP POSITION AND TURN STUD.

10. SECURE ONE OF THE SLIDEOUT ROOM ACTIVATION KEYS TO THE ROD-LOCK STRAP. KEYS ARE INCLUDED WITH SWITCH ASSEMBLY P/N 163097(REF).

9. FILL ALL NAIL HOLES PER ES0068.

8. USE POLY-CLEAR 47034-07-000 AND ATTACH IT USING WASHER 47533-01-000 TO PROTECT THE SLIDEOUT FLOOR.

7. SEE SEALANT MANUAL.

6. TORQUE TO 77 Nm (57 FT-lb).

5. USE SCREW G39-08-08U TO HOLD EACH END OF TRIM.

4. AFTER ALL ADJUSTMENTS ARE COMPLETE, TIGHTEN THE JAM NUTS.

3. LOOSEN BOLTS TO ALLOW ROOM TO MOVE SIDE TO SIDE IN THE SLOTS ON THE MOUNTING BRACKETS UNTIL IT IS CENTERED IN THE OPENING.

2. TORQUE TO 56 Nm (41 FT-lb).

1. FOR ADDITIONAL INFORMATION SEE THE WIRE INSTALLATION FRONT END.

NOTES:

65G WINDOW COACH-SINGLE PANE
13Y WINDOWS-COACH-DUAL PANE
094 WINDOWS - SE-GI
64T SIDEWALLS-HIGH GLOSS
64V SIDEWALL-PREMIUM HIGH GLOSS

WINNEBAGO INDUSTRIES

COPYRIGHT 2010
WINNEBAGO
INDUSTRIES, INC.

DFTR	ORIG. DATE
CHKR	ALL DIMENSIONS ARE IN MILLIMETERS
P.E.	
M.E.	FIRST USED
DSNR	09 730C

UNSPECIFIED TOLERANCES ARE:
WHOLE DIM (X) : 3
ONE-PLACE (X.X) :
TWO-PLACE (X.XX) :
ANGLE :

MATERIAL:

THIRD ANGLE PROJECTION

DO NOT SCALE DRAWING

REFER TO ES0018 FOR FASTENER TIGHTENING GUIDELINES

TITLE:
SLIDEOUT COMPL-FRONT,LH

SHEET 1 OF 4 | PART NO 165356 | REV

REF:

4/29/2010

DWG NO 165356

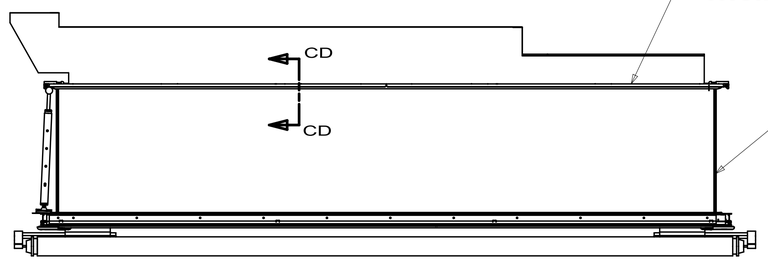

TRIM KIT-INTERIOR,SLIDEOUT
174648-58-XXX
SCREWS
000G62-08-12B (24)

ROOF ASM-SLIDEOUT
166398-01-Y37
SCREW
000G62-08-12B (25)

TRIM-FEATURE UPPER
158375-03-01A-B/W (2)
158375-03-02A-BLK (2)
SCREW
14 154938-02-01A (8)

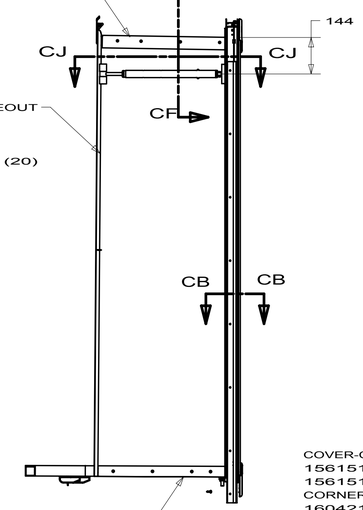

64T
64V
PANEL ASM-SLIDEOUT
164200-01-XXX
164200-03-XXX
SCREW
000G62-08-12B (20)

TRIM-FEATURE,LOWER
163020-06-01A-B/W (2)
163020-06-02A-BLK (2)
SCREW
14 154938-02-01A (8)

12 AWNING
122977-20-CHT
SCREW
000G39-10-12D (4)

AWNING BRACKET (2)
SUPPLIED WITH AWNING
SCREW
0G3910-24-170 (10)

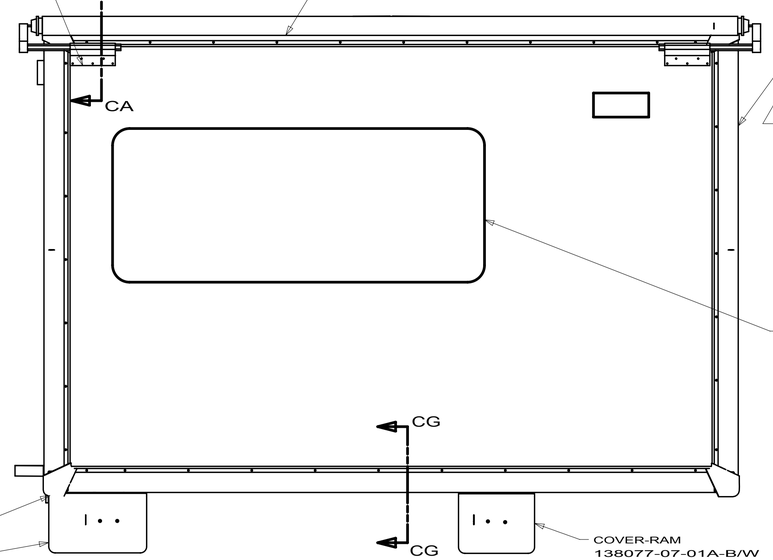

TRIM-KIT EXTERIOR
162091-61-XXX
SCREW
154938-05-03A (34) 14
5 INSERT
105312-01-07A-B/W (7748)
105312-01-13A-BLK (7748)
SCREW
154938-04-01A (25) 14

SLUG ASM-SLIDEOUT
(SEE TAB)

COVER-CORNER
156151-01-01A-BLK (4)
156151-01-02A-B/W (4)
CORNER KEY
160421-01-01A-BLK (4)
160421-01-02A-B/W (4)

COVER-RAM
138077-33-11A-B/W
138077-33-10A-BLK
ANGLE
141702-11-01A
SCREW
049465-17-000 (4)
SEAL
099418-01-000
(1050)

COVER-RAM
138077-07-01A-B/W
138077-07-10A-BLK
ANGLE
141702-11-01A
SCREW
049465-17-000 (4)
SEAL
099418-01-000
(1050)

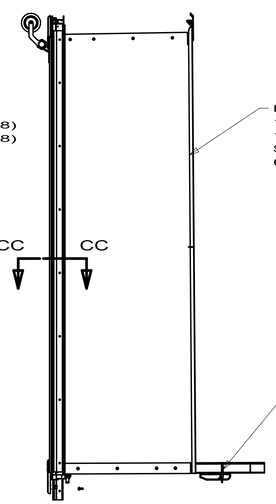

PANEL ASM-SLIDEOUT
164200-02-XXX
164200-04-XXX
SCREW
000G62-08-12B (20)
64T
64V

SEAL-WIPE
115075-02-000
(718)
SCREW
000G55-08-12U(4)

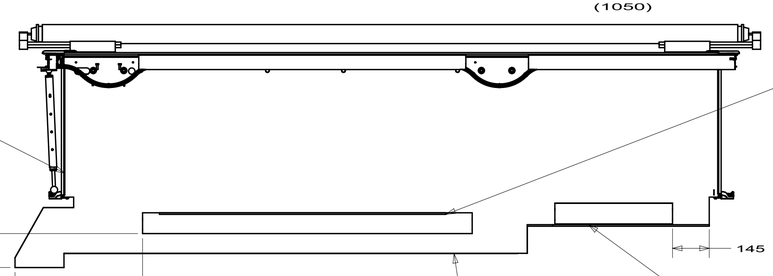

FLOOR ASM-SLIDEOUT
166397-01-XXX

RAIL-FLOOR
115325-07-01A
SCREW
000G39-10-12B (6) 54M
POLYETHYLENE
115661-01-000
(1300)
RAMP
174758-02-A79
SCREW
000G62-10-32B (6) 513 13

134
503
145

TRIM-CARPET
151282-12-01A
SCREW
000G39-10-12U (8)

RAMP
134756-03-AS6(UP TO 10-04-09)
174758-03-A79(AFTER 10-05-09)
SCREW
000G62-10-32B (3)

64T SIDEWALLS-HIGH GLOSS
64V SIDEWALL-PREMIUM HIGH GLOSS
27A EXT FULL BODY PAINT PKG #1
92A EXT FULL BODY PAINT PKG # 2
513 FLOORCOVERING-VINYL-THRU OUT

ROOM ASM-SLIDEOUT
(SEE TAB)

FIRST USED	09 730C
DO NOT SCALE DRAWING	
TITLE:	SLIDEOUT COMPL-FRONT,LH
SHEET 2	PART NO 165356 REV

4/29/2010

DWG NO 165356

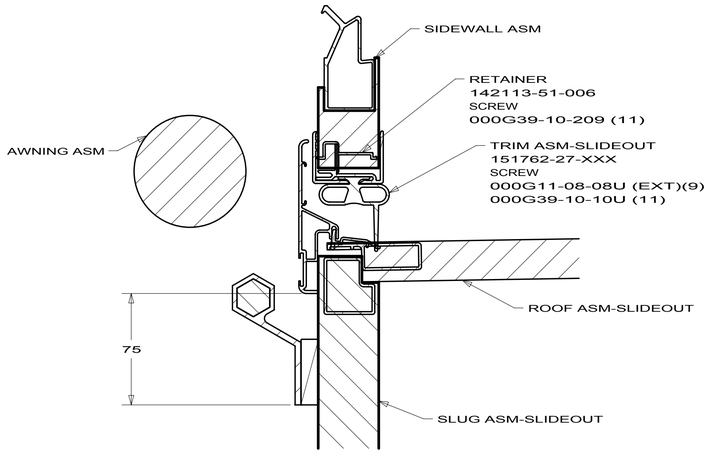

SECTION CA-CA

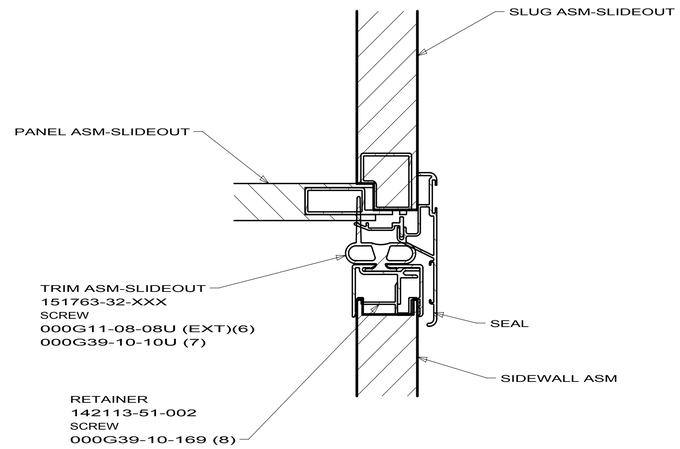

SECTION CB-CB

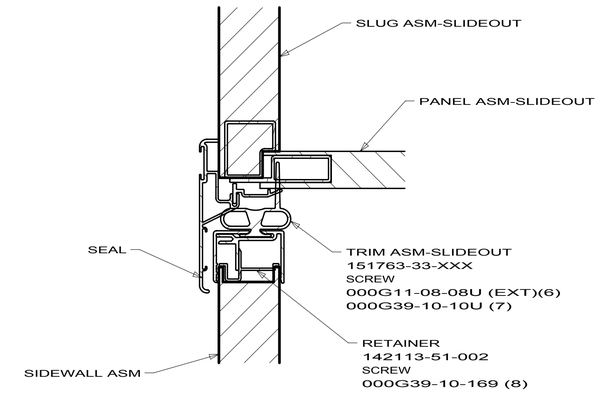

SECTION CC-CC

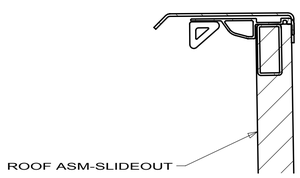

SECTION CD-CD

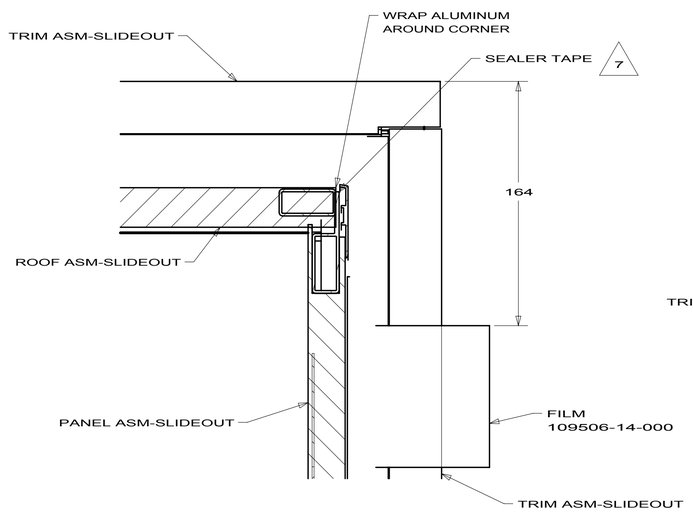

SECTION CF-CF

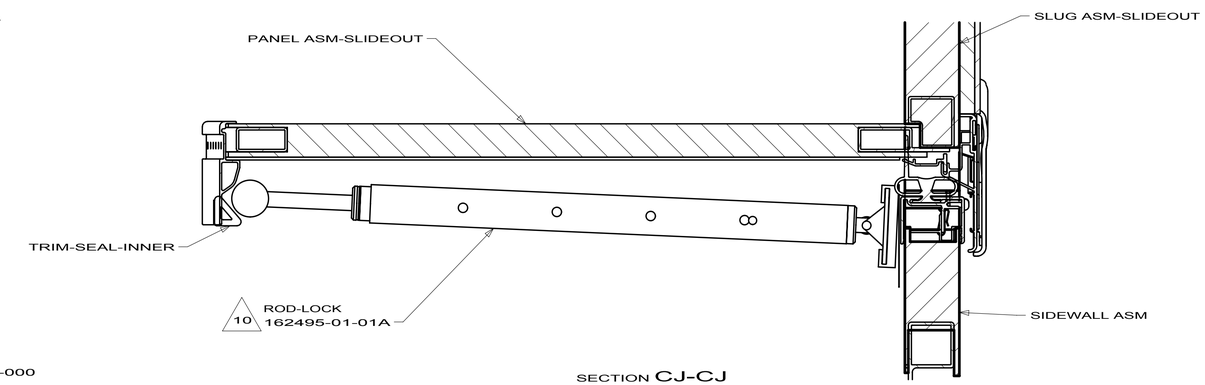

SECTION CJ-CJ

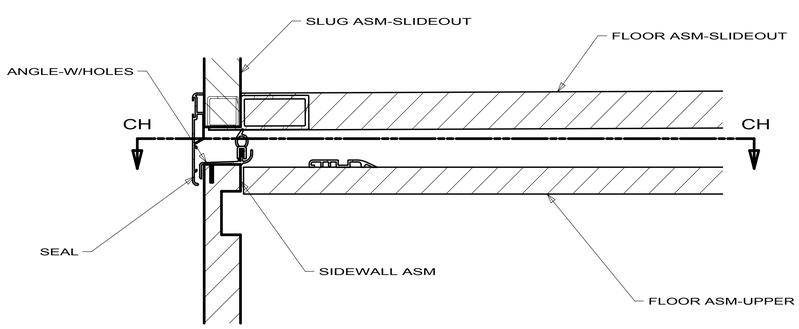

SECTION CG-CG

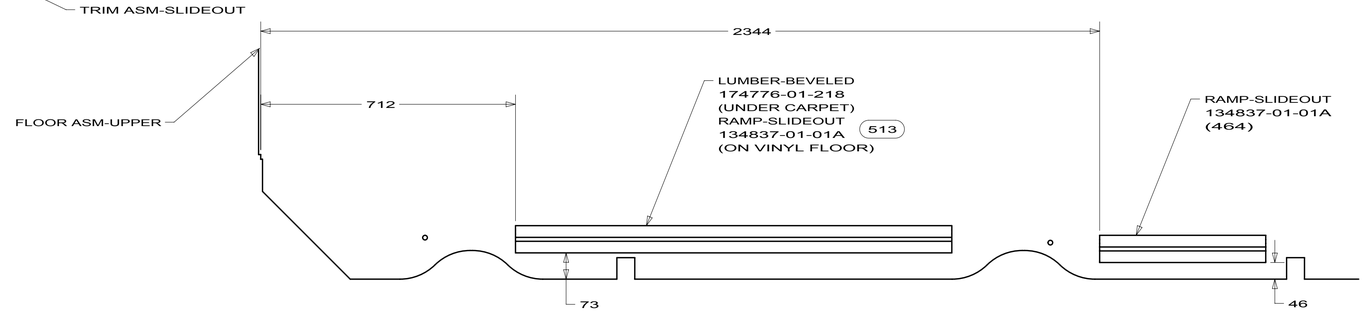

513 FLOORCOVERING-VINYL-THRU OUT

SECTION CH-CH
(ROTATED)

FIRST USED	09 730C
DO NOT SCALE DRAWING	
TITLE:	SLIDEOUT COMPL-FRONT,LH
SHEET 3	PART NO 165356 REV

4/29/2010

DWG NO 165356

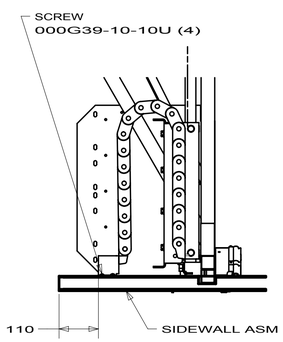

SECTION EC-EC

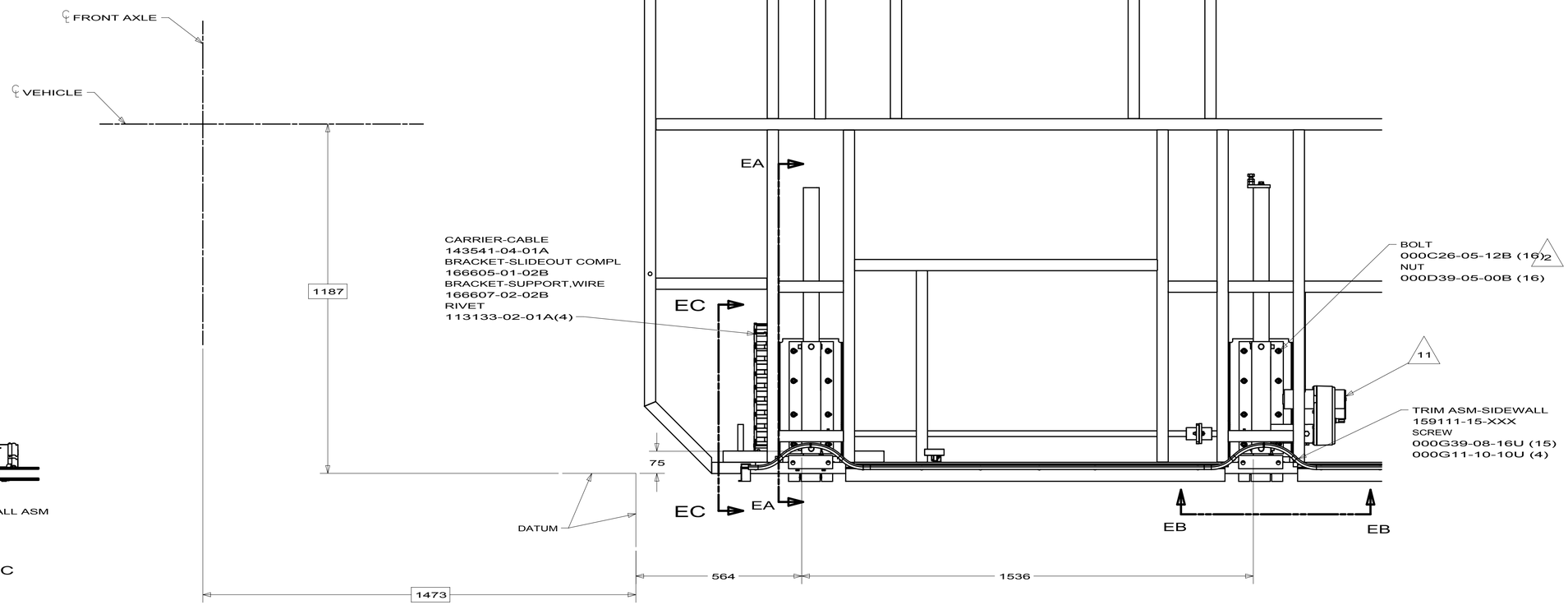

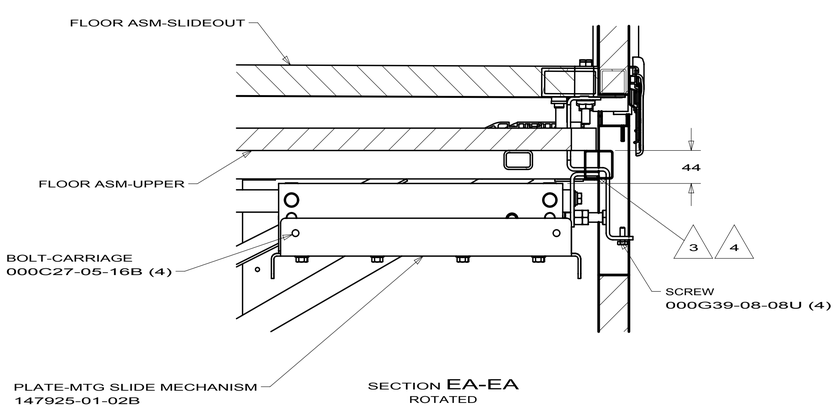

SECTION EA-EA
ROTATED

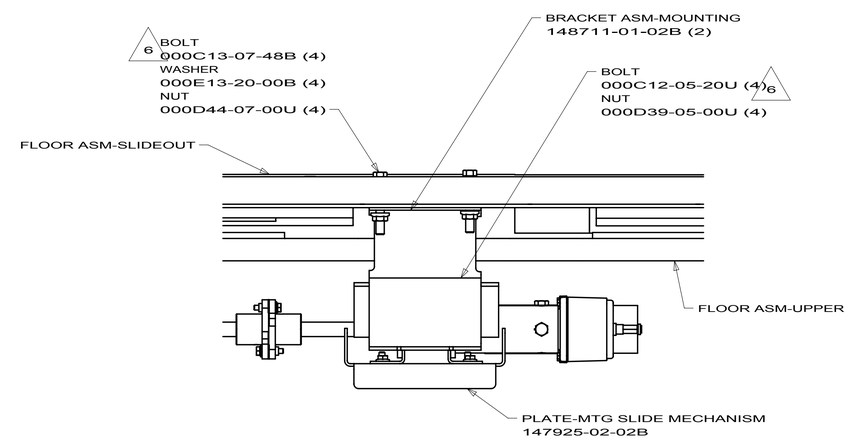

SECTION EB-EB

FIRST USED	09 730C
DO NOT SCALE DRAWING	
TITLE:	SLIDEOUT COMPL-FRONT,LH
SHEET 4	PART NO 165356 REV

4/29/2010

DWG NO	ROOM ASM	SLUG ASM	
165357-01	165357-11	165364-11-XXX	64T
165357-02	165357-12	165364-12-XXX	64V
165357-03	165357-13	173341-11-XXX	64T
165357-04	165357-14	173341-12-XXX	64V
165357-05	165357-15	173341-14-XXX	64T 65G 094
165357-06	165357-16	173341-15-XXX	64V 65G 094
165357-07	165357-17	173341-16-XXX	64T 13Y 094
165357-08	165357-18	173341-17-XXX	64V 13Y 094
165357-09	165357-19	165364-13-XXX	64T 65G 094
165357-10	165357-20	165364-14-XXX	64V 65G 094
165357-50	165357-21	165364-15-XXX	64T 13Y 094
165357-51	165357-22	165364-16-XXX	64V 13Y 094

RELEASE	REV A	DATE	DWG NO 165357
REV	ZONE	REVISION RECORD	DATE	DFTR-ORIG

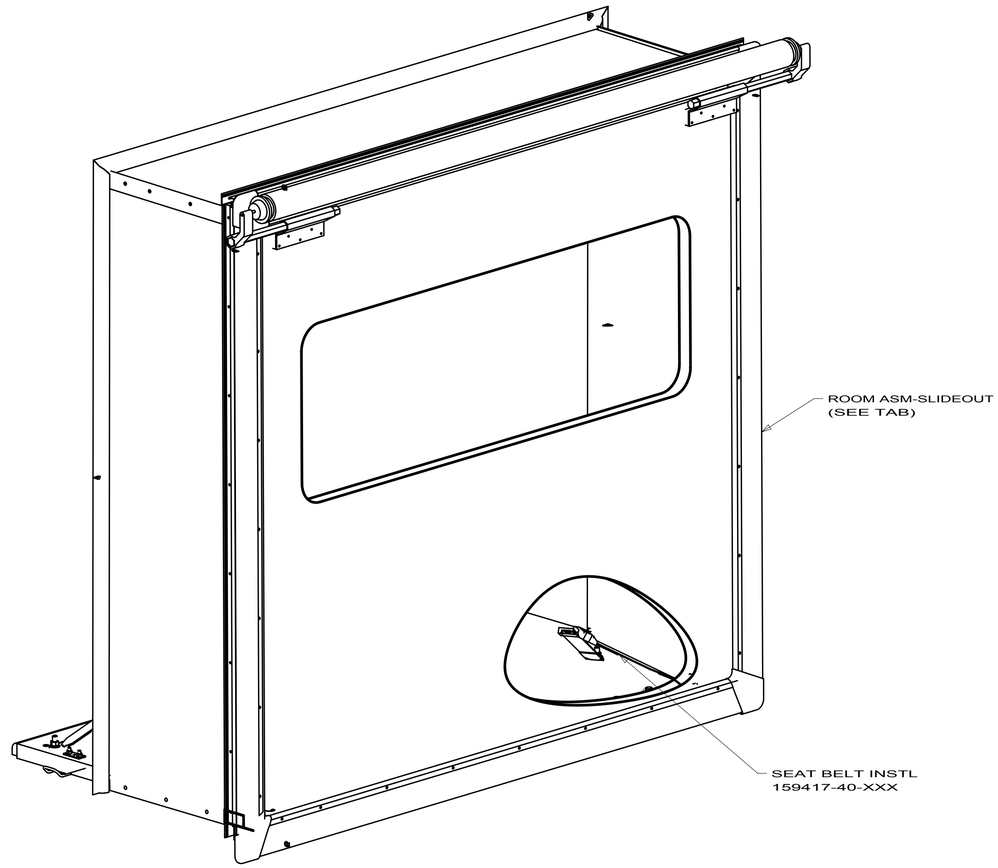

16. SECURE ONE OF THE SLIDEOUT ROOM ACTIVATION KEYS TO THE ROD-LOCK STRAP. KEYS ARE INCLUDED WITH SWITCH ASSEMBLY P/N 163097(REF).

15. ADJUST BOLT TO MOVE ROOM UP OR DOWN TO CENTER ROOM IN OPENING.

14. SCREWS CAN NOT BE REUSED. ANY TIME A SCREW IS REMOVED IT MUST BE DISCARDED AND REPLACED WITH A NEW SCREW TO INSURE THE THREADS SEAL.

13. SCREWS MUST BE COUNTERSUNK 3MM BELOW SURFACE OF THE WOOD.

12. ANTI-BILLOW BRACKET TO BE INSTALLED ON REAR SIDE OF SLIDE ROOM AT 11:00 POSITION. THE SDW BLOCK IS NOT USED.

11. FOR MANUAL CYCLE ROOM, LIFT LEVER TO UP POSITION AND TURN STUD.

10. USE SCREW G39-10-12T TO HOLD PANEL EDGES.

9. FILL ALL NAIL HOLES PER ES0068.

8. USE POLY-CLEAR 47034-07-000 AND ATTACH IT USING WASHER 47533-01-000 TO PROTECT THE SLIDEOUT FLOOR.

7. SEE SEALANT MANUAL.

6. TORQUE TO 77 Nm (57 FT-lb).

5. USE SCREW G39-08-08U TO HOLD EACH END OF TRIM.

4. AFTER ALL ADJUSTMENTS ARE COMPLETE, TIGHTEN THE JAM NUTS.

3. LOOSEN BOLTS TO ALLOW ROOM TO MOVE SIDE TO SIDE IN THE SLOTS ON THE MOUNTING BRACKETS UNTIL IT IS CENTERED IN THE OPENING.

2. TORQUE TO 56 Nm (41 FT-lb).

1. FOR ADDITIONAL INFORMATION SEE THE WIRE INSTALLATION FRONT END.

NOTES:

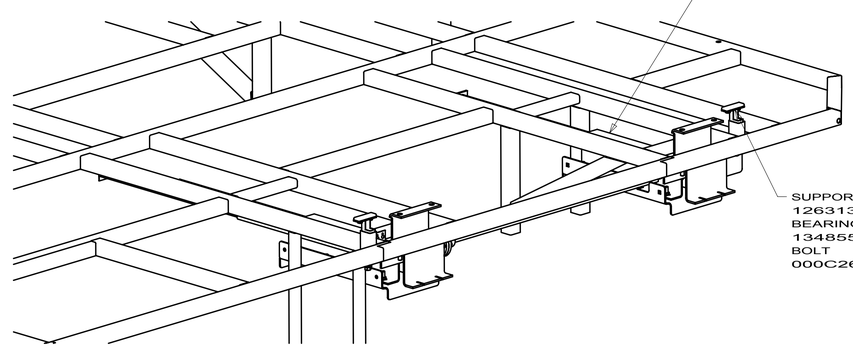

65G WINDOW COACH-SINGLE PANE
13Y WINDOWS-COACH-DUAL PANE
094 WINDOWS - SE-GI
64V SIDEWALL-PREMIUM HIGH GLOSS
64T SIDEWALLS-HIGH GLOSS

COPYRIGHT 2010
WINNEBAGO
INDUSTRIES, INC.

DFTR	ORIG. DATE
CHKR	ALL DIMENSIONS ARE IN MILLIMETERS
P.E.	
M.E.	FIRST USED
DSNR	09 730C

UNSPECIFIED TOLERANCES ARE:
WHOLE DIM (X) : 3
ONE-PLACE (X.X) :
TWO-PLACE (X.XX) :
ANGLE :

MATERIAL:

THIRD ANGLE PROJECTION

DO NOT SCALE DRAWING

REFER TO ES0018 FOR FASTENER TIGHTENING GUIDELINES

TITLE:
SLIDEOUT COMPL-FRONT

SHEET 1 OF 4 | PART NO 165357 | REV

REF: 1

4/29/2010

DWG NO 165357

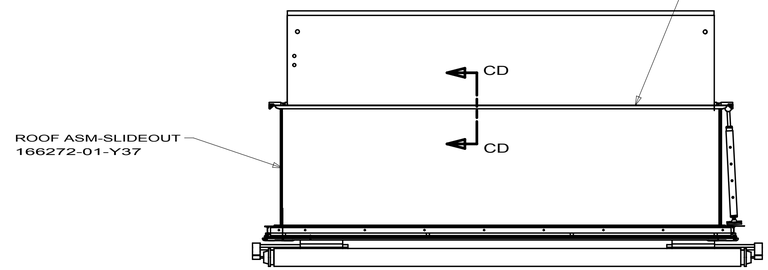

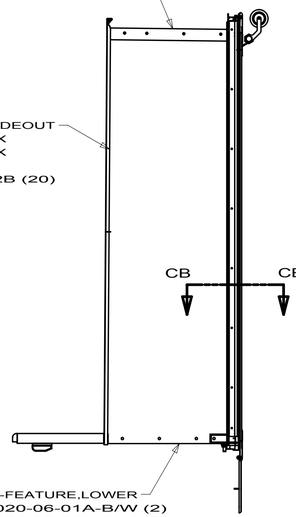

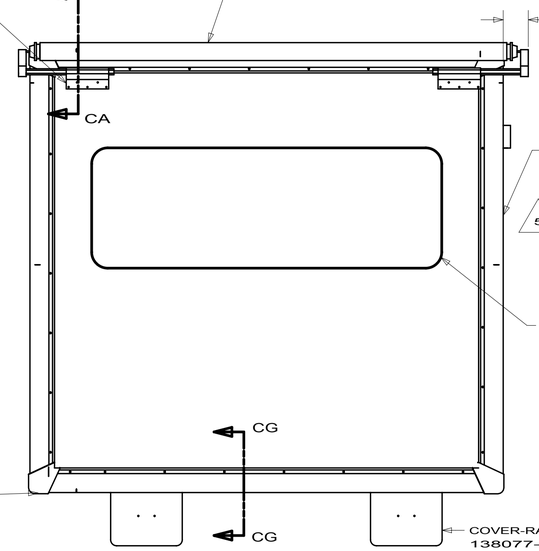

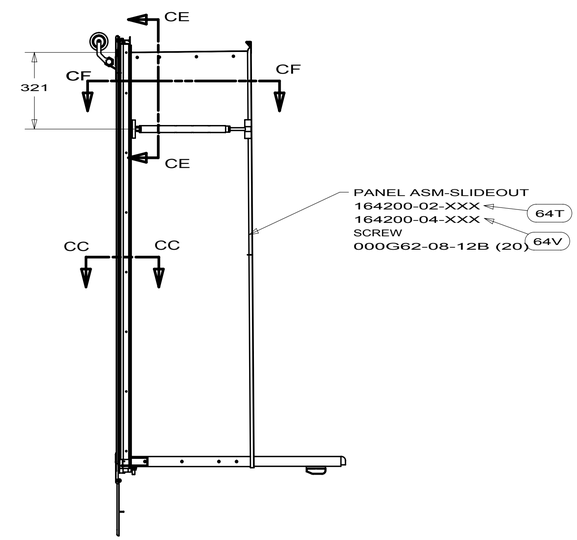

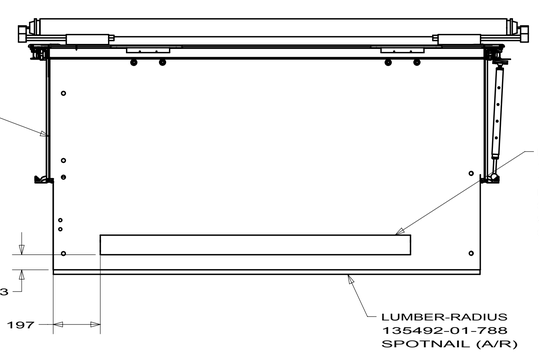

64V SIDEWALL-PREMIUM HIGH GLOSS
64T SIDEWALLS-HIGH GLOSS
27A EXT FULL BODY PAINT PKG #1
92A EXT FULL BODY PAINT PKG # 2
513 FLOORCOVERING-VINYL-THRU OUT

ROOM ASM-SLIDEOUT
(SEE TAB)

FIRST USED	09 730C
DO NOT SCALE DRAWING	
TITLE: SLIDEOUT COMPL-FRONT	
SHEET 2	PART NO 165357 REV

4/29/2010

DWG NO 165357

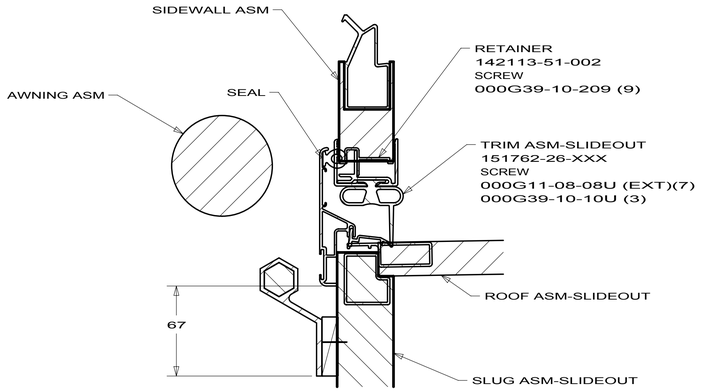

SECTION CA-CA

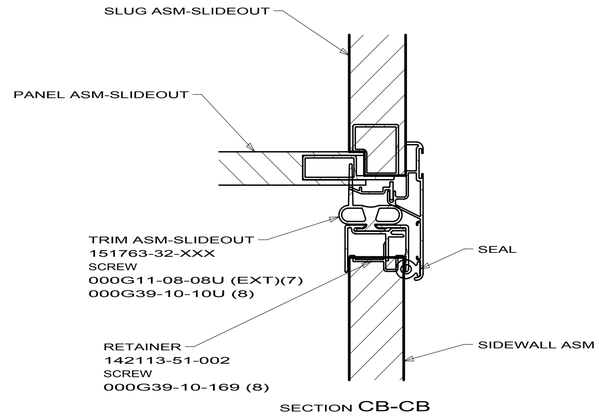

SECTION CB-CB

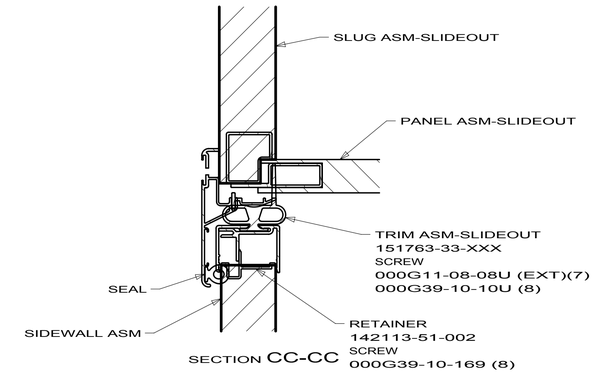

SECTION CC-CC

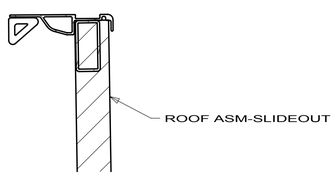

SECTION CD-CD

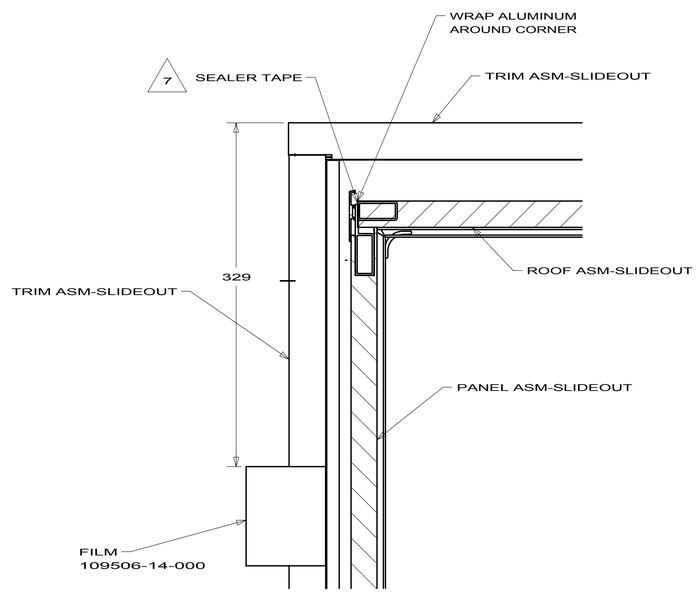

SECTION CE-CE

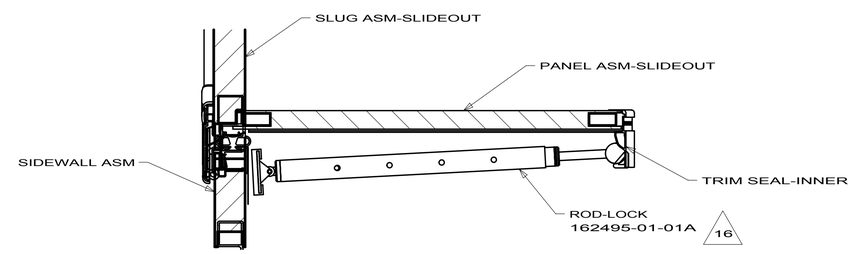

SECTION CF-CF

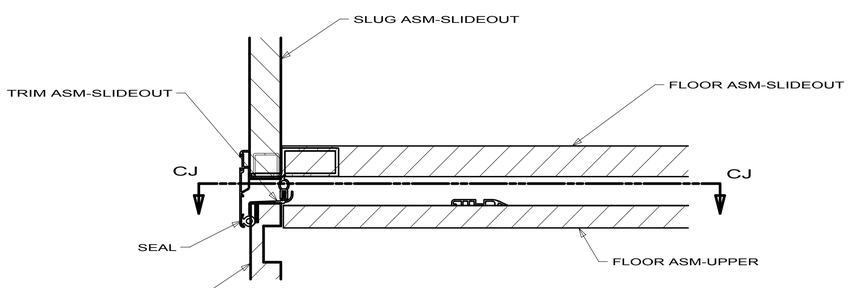

SECTION CG-CG

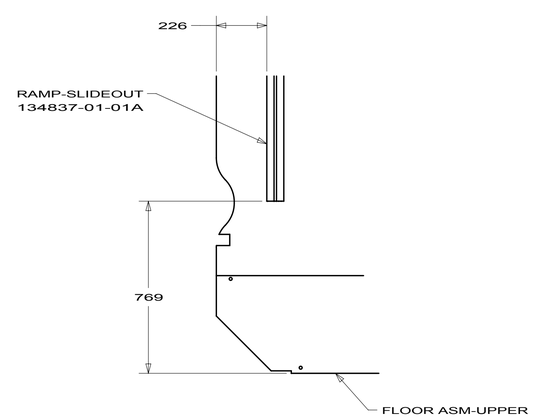

SECTION CJ-CJ

FIRST USED	09 730C
	DO NOT SCALE DRAWING
TITLE:	SLIDEOUT COMPL-FRONT
SHEET 3	PART NO 165357 REV

4/29/2010

DWG NO 165357

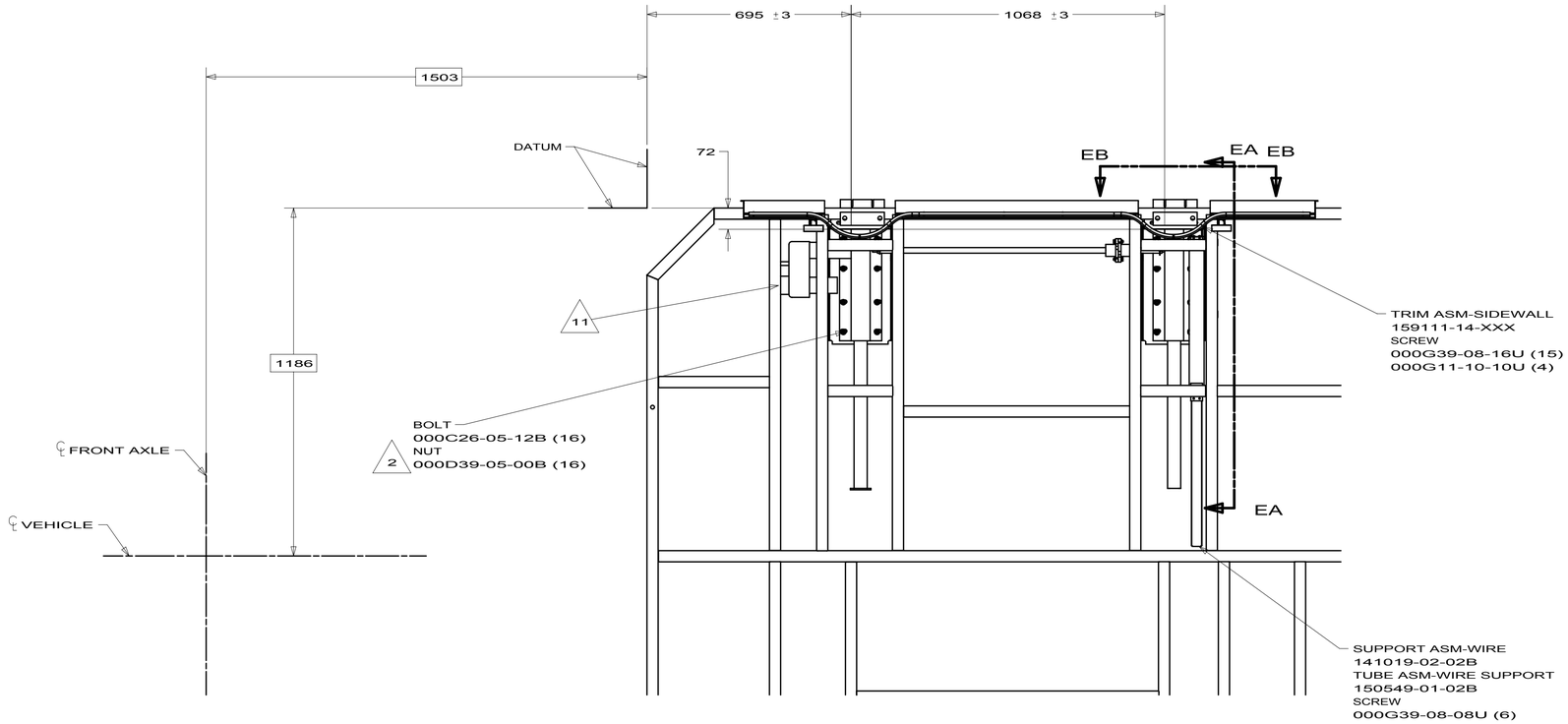

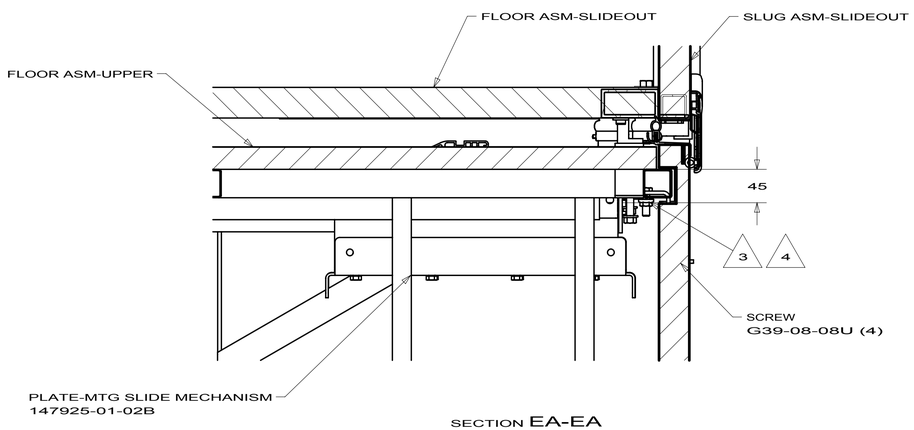

SECTION EA-EA
ROTATED

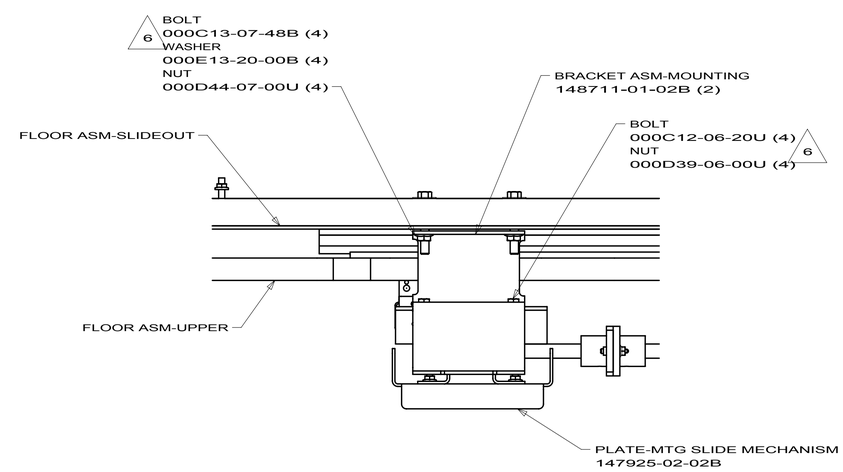

SECTION EB-EB
ROTATED

FIRST USED	09 730C
DO NOT SCALE DRAWING	
TITLE:	SLIDEOUT COMPL-FRONT
SHEET 4	PART NO. 165357 REV

4/29/2010

DWG NO	ROOM ASM-SLIDEOUT	SLUG ASM-SLIDEOUT	
165358-01	165358-11-XXX	165365-12-XXX	64T
165358-02	165358-12-XXX	165365-15-XXX	64V
165358-03	165358-13-XXX	172230-12-XXX	64T
165358-04	165358-14-XXX	172230-14-XXX	64V
165358-05	165358-15-XXX	172230-12-XXX	64T 65G 094
165358-06	165358-16-XXX	172230-14-XXX	64V 65G 094
165358-07	165358-17-XXX	172230-12-XXX	64T 13Y 094
165358-08	165358-18-XXX	172230-14-XXX	64V 13Y 094
165358-09	165358-19-XXX	165365-12-XXX	64T 65G 094
165358-10	165358-20-XXX	165365-15-XXX	64V 65G 094
165358-50	165358-21-XXX	172230-12-XXX	64T 13Y 094
165358-51	165358-22-XXX	172230-15-XXX	64V 13Y 094

RELEASE	REV A	DATE	DWG NO 165358
REV	ZONE	REVISION RECORD	DATE	DFTR-ORIG

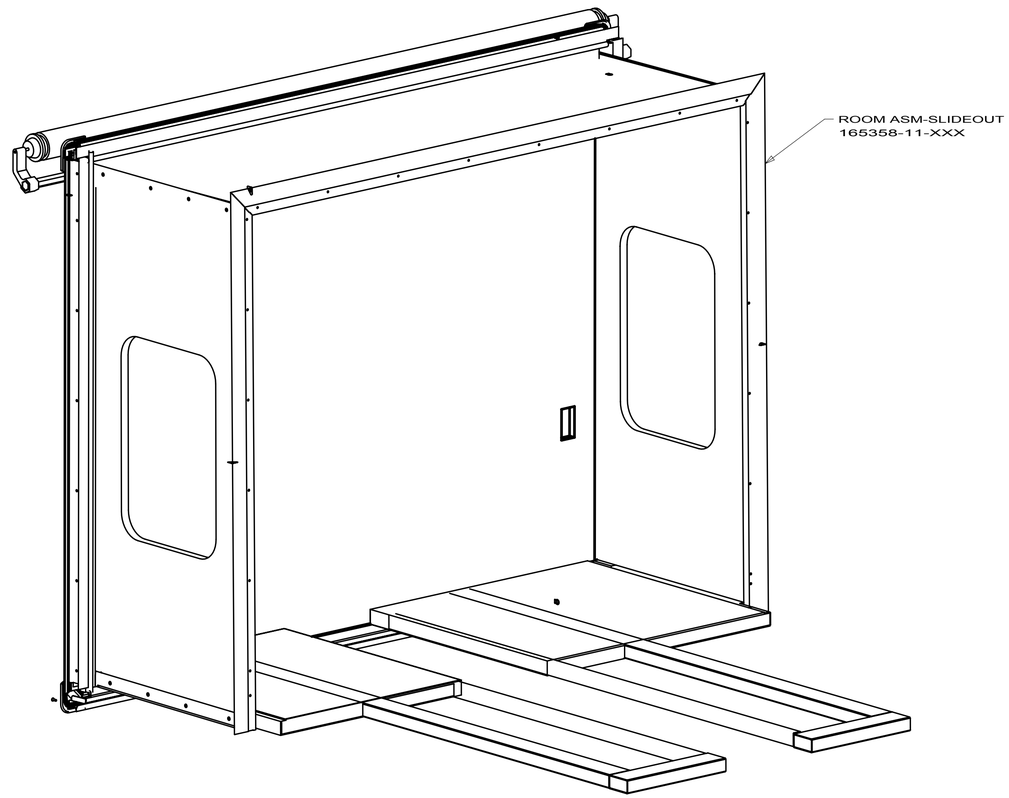

13. THIS IS THE NOMINAL DIMENSION. THE PARTS SHOULD BE ADJUSTED AS REQUIRED FROM THERE.

12. TORQUE ALL BOLTS PER ES0018 UNLESS OTHERWISE SPECIFIED. (SEE TABLE BELOW)

SIZE	TORQUE VALUE (FT-LBS)
1/4 - 20 (.250)	76 (IN-LBS)
5/16 - 18 (.3125)	13 (FT-LBS)
3/8 - 16 (.375)	23 (FT-LBS)
7/16 - 14 (.4375)	37 (FT-LBS)
1/2 - 13 (.500)	57 (FT-LBS)

11. USE POLY-CLEAR 47034-07-000 AND ATTACH IT USING WASHER 44533-01-000 TO PROTECT THE SLIDEOUT FLOOR.

10. POSITION SEAL FLUSH WITH LOWER TRIM AND TIGHT AGAINST INNER TRIM.

9. SCREWS CANNOT BE REUSED. ANY TIME A SCREW IS REMOVED IT MUST BE DISCARDED AND REPLACED WITH A NEW SCREW TO INSURE THE THREADS SEAL.

8. USE SCREW G39-08-08S TO HOLD EACH END OF TRIM.

7. SEE SEALANT MANUAL.

6. LOOSEN BOLTS TO ALLOW ROOM TO MOVE SIDE TO SIDE ON THE MOUNTING BRACKETS UNTIL IT IS CENTERED IN THE OPENING. TIGHTEN AFTER ALL ADJUSTMENTS ARE COMPLETE.

5. ADJSUT BOLT TO MOVE ROOM UP OR DOWN TO BE CENTERED IN THE SIDEWALL OPENING. TIGHTEN AFTER ALL ADJUSTMENTS ARE COMPLETE.

4. THIS IS A NOMINAL DIMENSION; THE PARTS SHOULD BE ADJUSTED AS REQUIRED FROM THERE.

3. THE RETRACTED LENGTH IS ADJUSTED UNTIL THE OUTSIDE TRIM OF THE ROOM SEALS AGAINST THE OUTSIDE OF THE SIDEWALL

2. THE EXTENDED LENGTH IS ADJUSTED UNTIL THE INSIDE TRIM OF THE ROOM SEALS AGAINST THE INSIDE OF THE SIDEWALL.

1. FOR ADDITIONAL INFORMATION SEE WIRE INSTALLATION FRONT END AND THE LEVELING JACK INSTALLATION DRAWINGS.

NOTES:

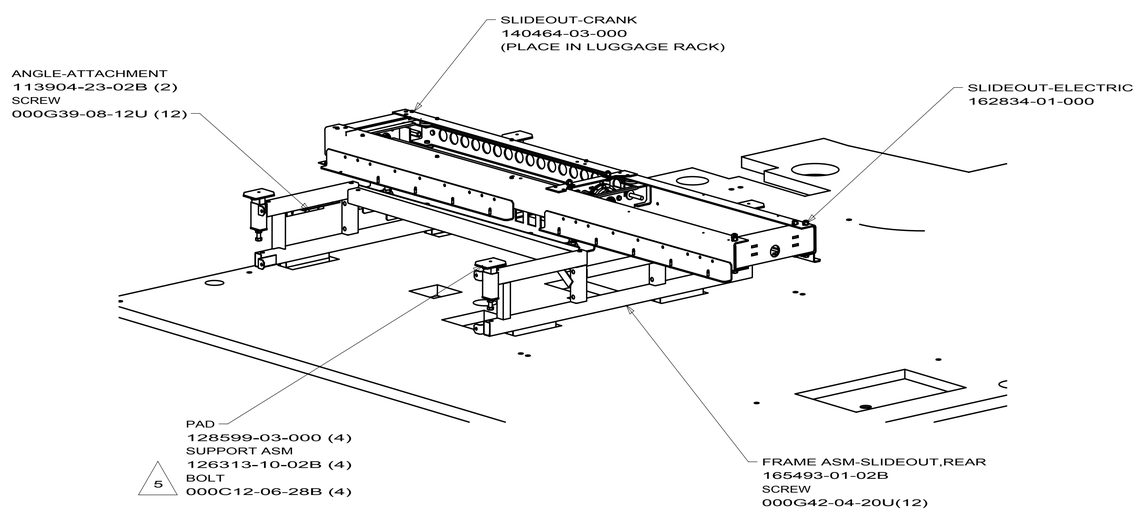

65G WINDOW COACH-SINGLE PANE
13Y WINDOWS-COACH-DUAL PANE
094 WINDOWS - SE-GI
64T SIDEWALLS-HIGH GLOSS
64V SIDEWALL-PREMIUM HIGH GLOSS

WINNEBAGO INDUSTRIES

COPYRIGHT 2010
WINNEBAGO
INDUSTRIES, INC.

DFTR	ORIG. DATE
CHKR	ALL DIMENSIONS ARE IN MILLIMETERS
P.E.	
M.E.	FIRST USED
DSNR	09 730C

UNSPECIFIED TOLERANCES ARE:
WHOLE DIM (X) : 3
ONE-PLACE (X.X) :
TWO-PLACE (X.XX) :
ANGLE :

MATERIAL:

THIRD ANGLE PROJECTION

DO NOT SCALE DRAWING

REFER TO ES0018 FOR FASTENER TIGHTENING GUIDELINES

TITLE:
SLIDEOUT COMPL-REAR,LH

SHEET 1 OF 4 | PART NO 165358 | REV

REF: 1

4/23/2010

DWG NO 165358

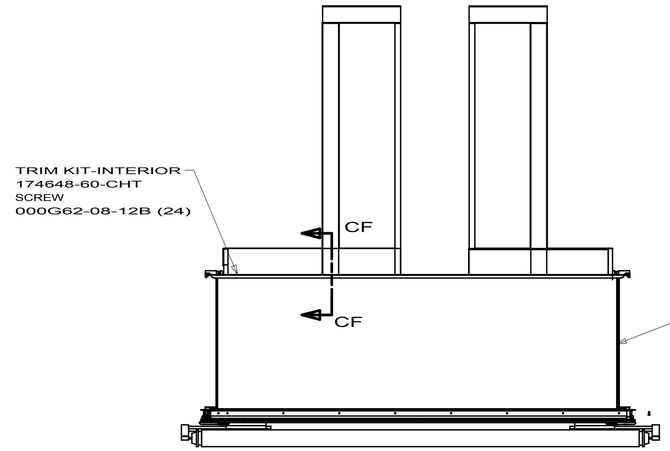

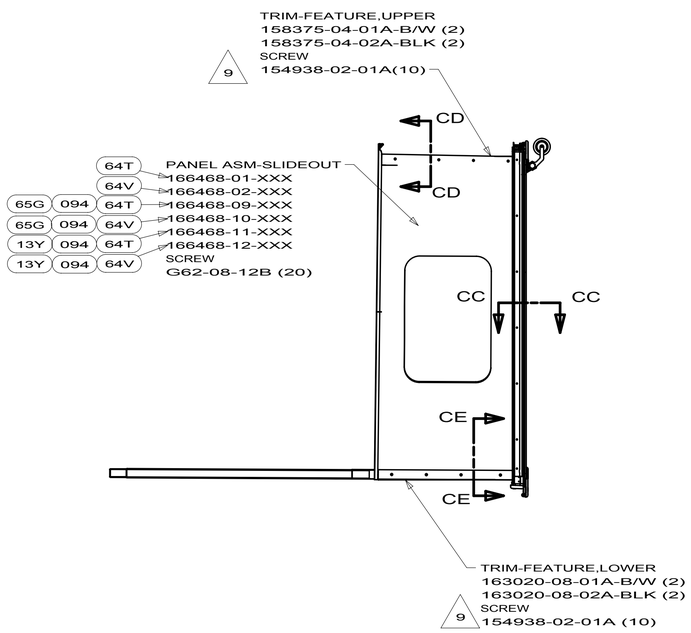

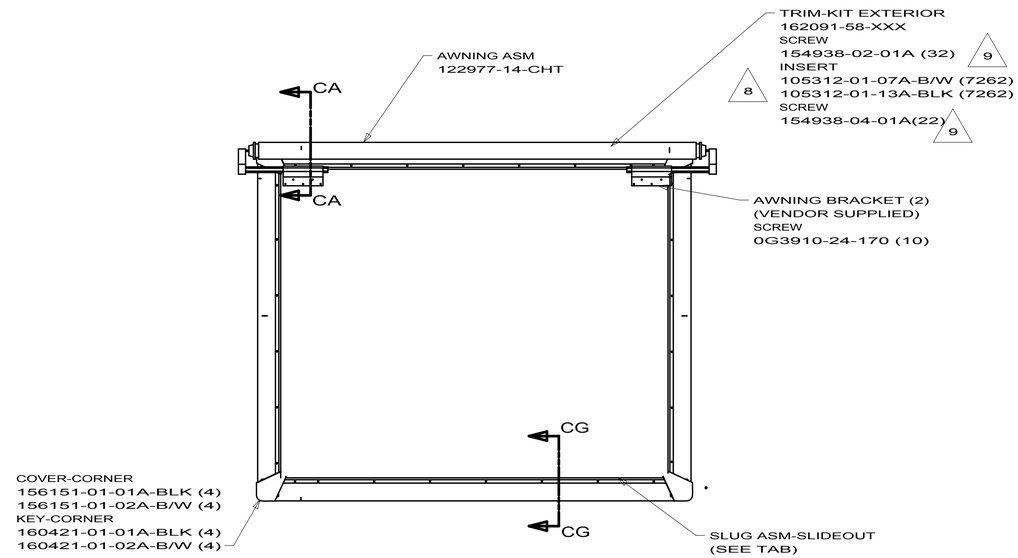

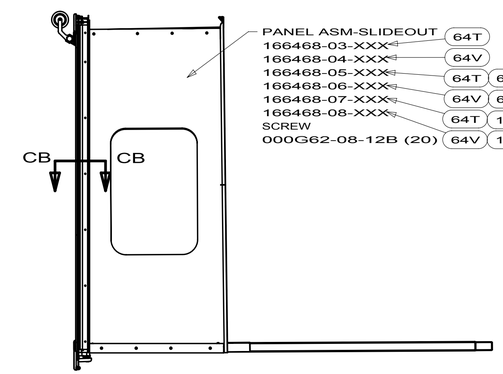

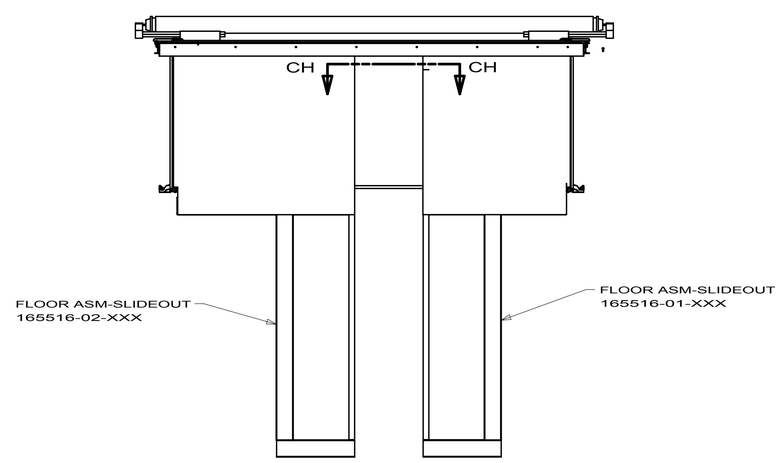

65G WINDOW COACH-SINGLE PANE
13Y WINDOWS-COACH-DUAL PANE
094 WINDOWS - SE-GI
64T SIDEWALLS-HIGH GLOSS
64V SIDEWALL-PREMIUM HIGH GLOSS

ROOM ASM-SLIDEOUT
(SEE TAB)

FIRST USED	09 730C
DO NOT SCALE DRAWING	
TITLE:	SLIDEOUT COMPL-REAR,LH
SHEET 2	PART NO 165358 REV

4/23/2010

DWG NO 165358

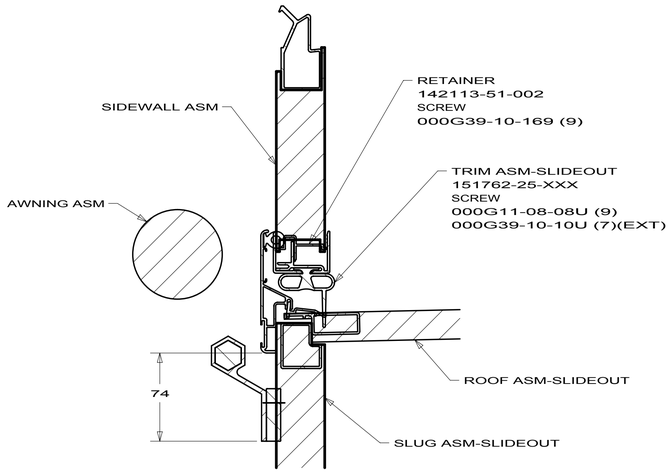

SECTION CA-CA

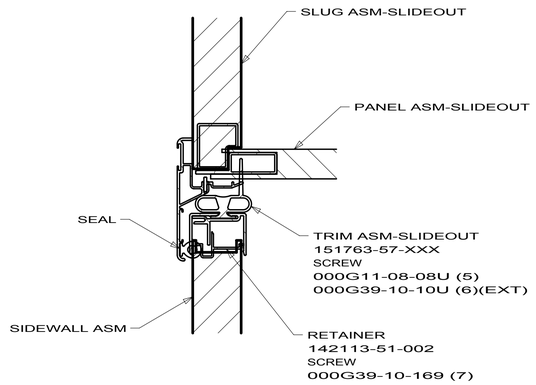

SECTION CB-CB

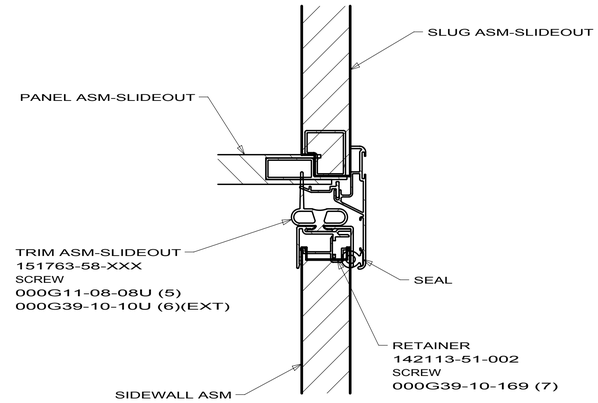

SECTION CC-CC

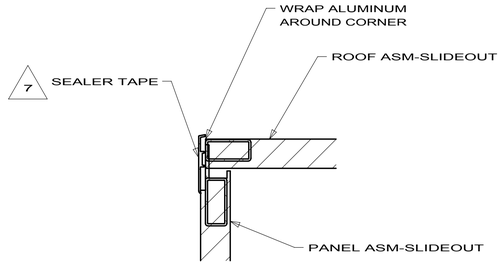

SECTION CD-CD

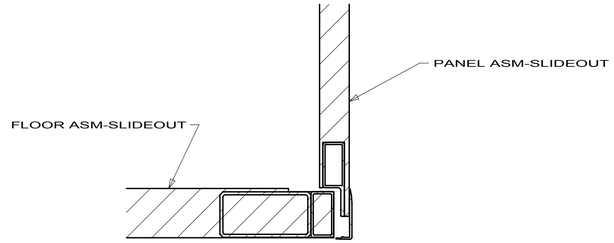

SECTION CE-CE

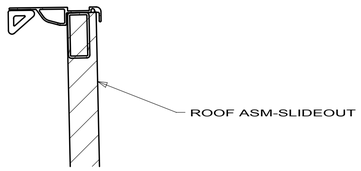

SECTION CF-CF

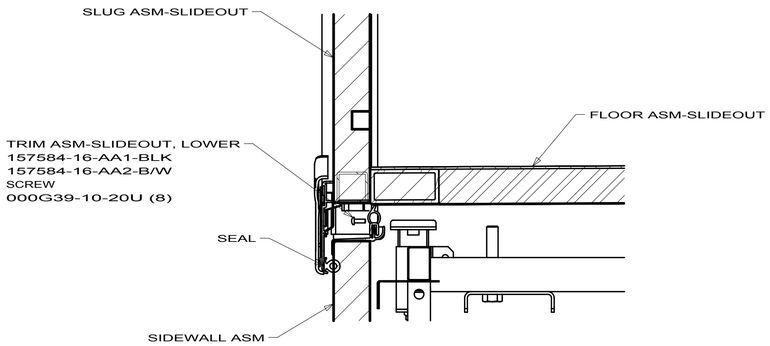

SECTION CG-CG

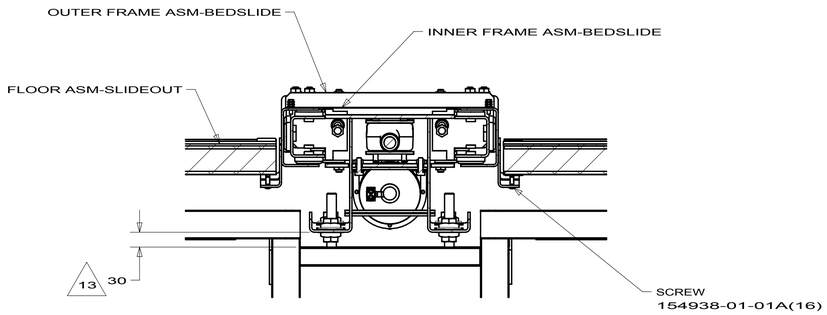

SECTION CH-CH

FIRST USED	09 730C
DO NOT SCALE DRAWING	
TITLE:	SLIDEOUT COMPL-REAR,LH
SHEET 3	PART NO 165358 REV

4/23/2010

DWG NO 165358

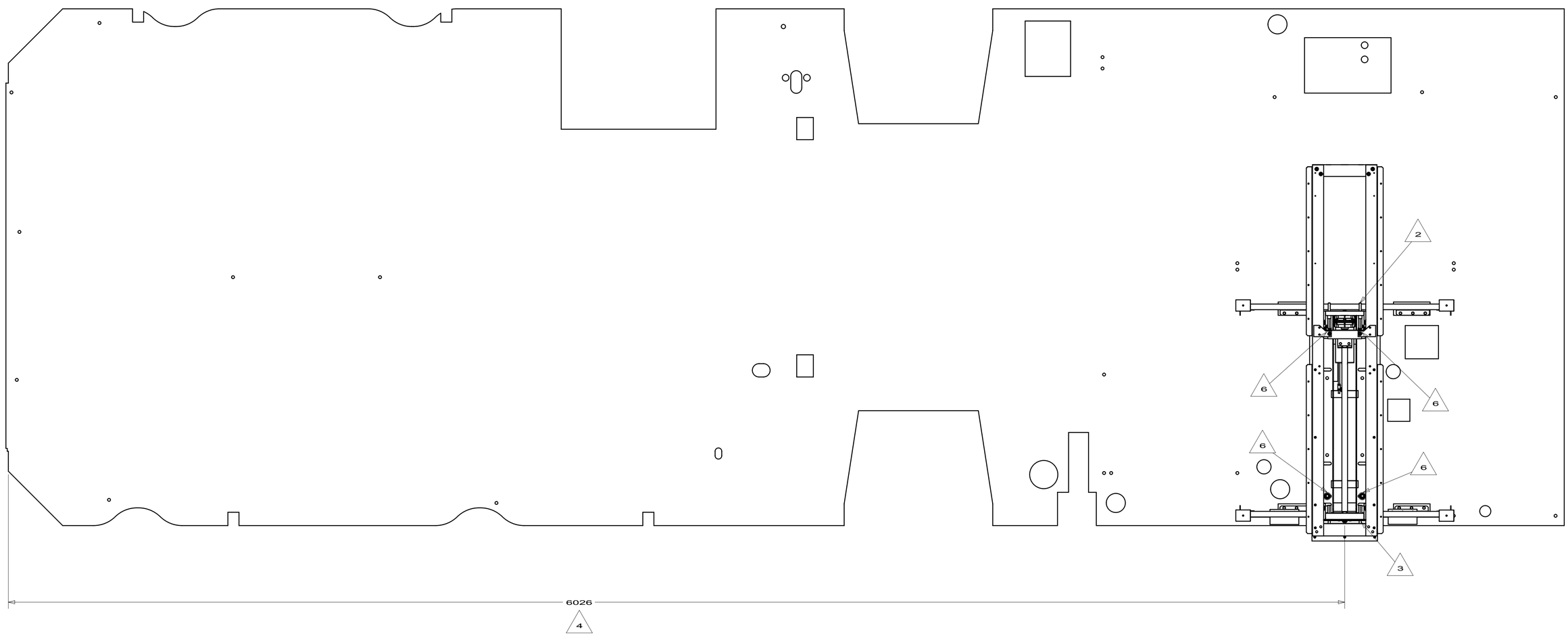

FIRST USED	09 730C
DO NOT SCALE DRAWING	
TITLE:	SLIDEOUT COMPL-REAR,LH
SHEET 4	PART NO 165358 REV

4/23/2010

150661-01-000

KEY	PART NUMBER	U/M	DESCRIPTION	VENDOR NO.
	150661-01-700	EA	SHAFT - SLAVE	29042
	150661-01-701	EA	SHAFT - ROUND DRIVE - 30"	29038
	150661-01-702	EA	POWER HEAD W/WORM DRIVE	29020
	150661-01-703	EA	CRANK TUBE	29022
	150661-01-704	EA	CAM FOLLOWER & NUT	28701
	150661-01-705	EA	FLANGE BEARING - .63" X .5"L	645-0028
	150661-01-706	EA	SPROCKET	28706
	150661-01-707	EA	SET SCREW - 1/4"-20	608-6005
	150661-01-708	EA	CLEVIS PIN	643-0030
	150661-01-709	EA	COTTOR PIN	625-0017
	150661-01-710	EA	CLEVIS PIN	643-0003
	150661-01-711	EA	COTTER PIN	625-0016
	150661-01-712	EA	SHAFT - ROUND DRIVE - 7.4"	29040
	150661-01-713	EA	ADAPTER - ADJUSTABLE SHAFT	28395
	150661-01-714	EA	RETAINING RING	634-0007
	150661-01-715	EA	DRIVE ASM. (MOTOR W/GEAR BOX)	29449
	150661-01-716	EA	MOTOR ONLY	16263
	150661-01-717	EA	PIN/SPRING - 5/16" X 1 1/4"	624-0014

COPYRIGHT © 2009 WINNEBAGO INDUSTRIES INC.

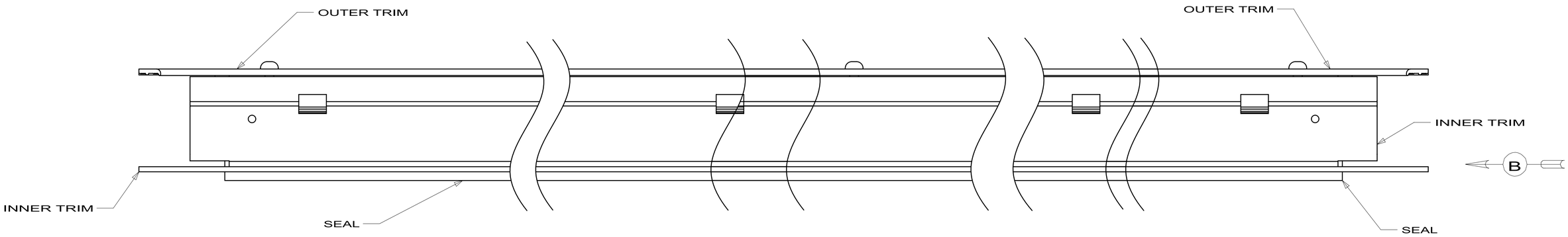

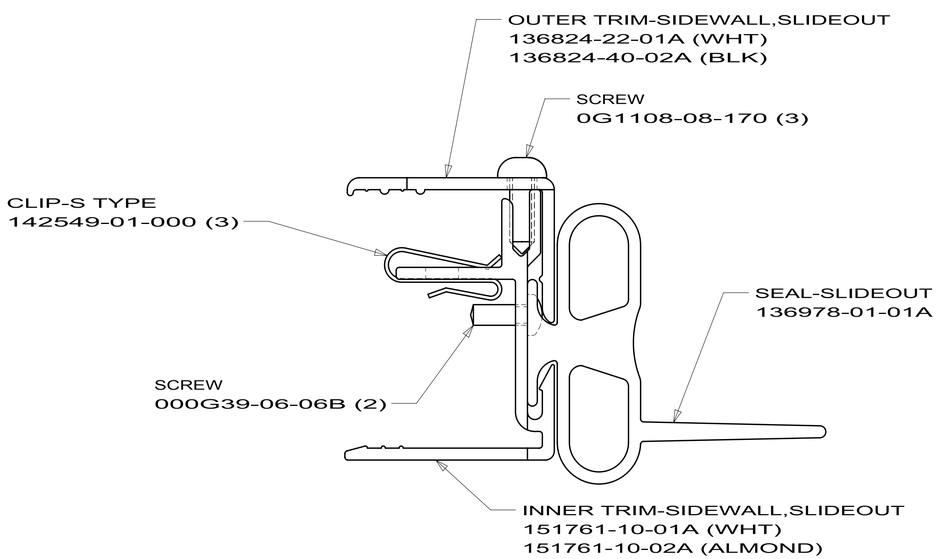

VIEW B

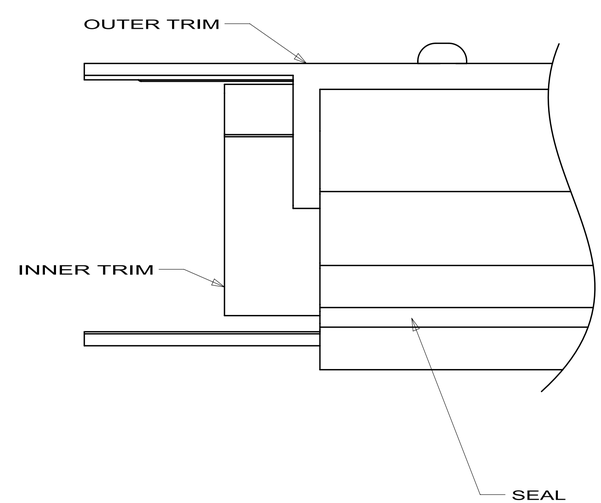

FABWELL SDW

TRIM ASM-SLIDEOUT,TOP

1 151762

4/27/2010

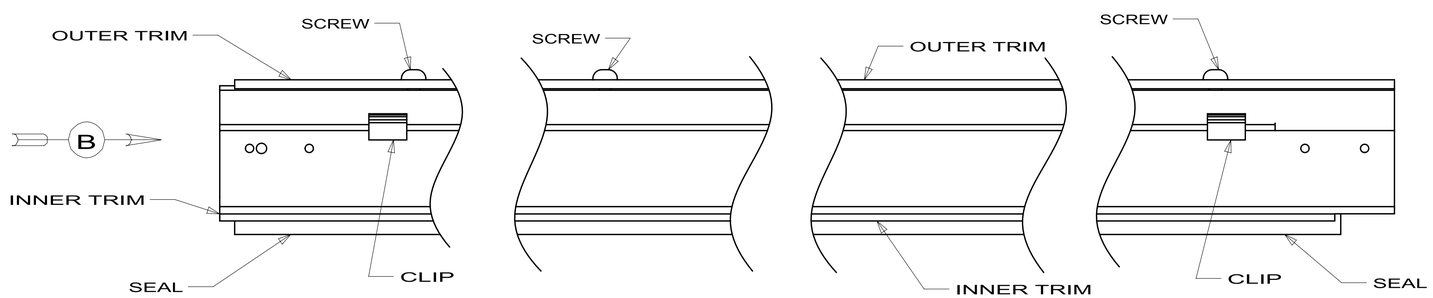

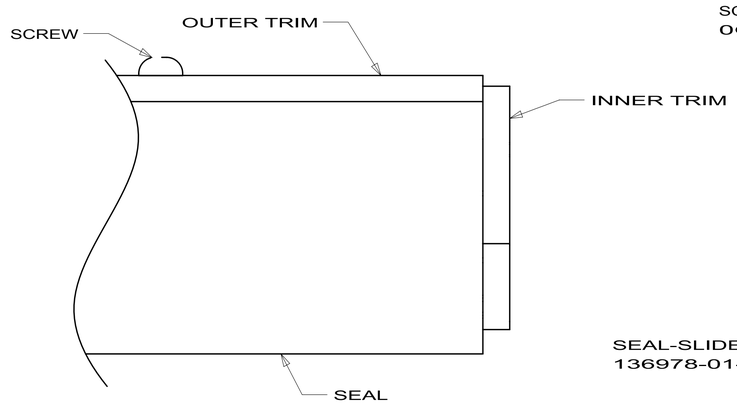

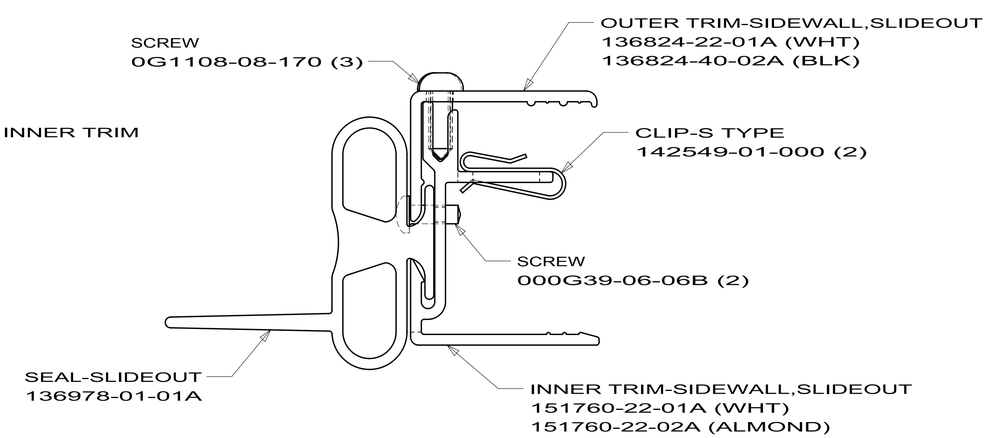

VIEW B

FABWELL SDW

TRIM ASM-SLIDEOUT,SIDE

1 2 151763

4/27/2010

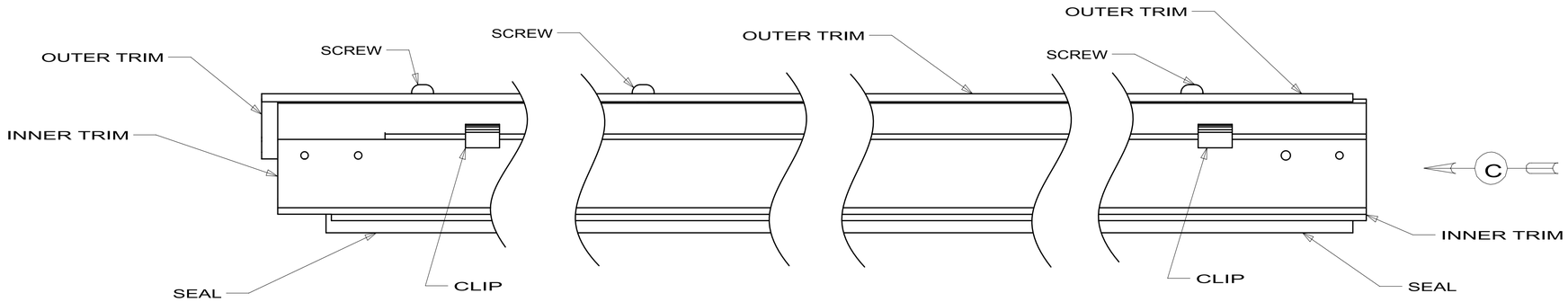

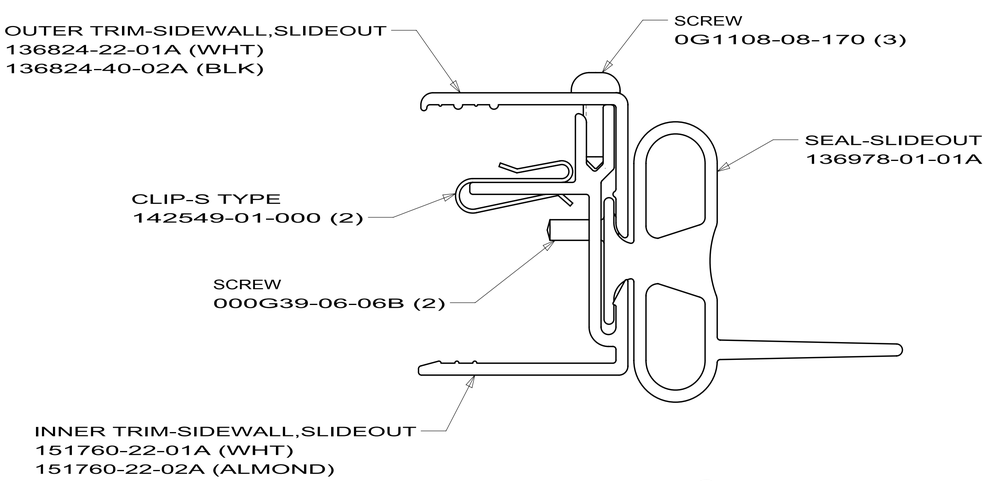

VIEW C

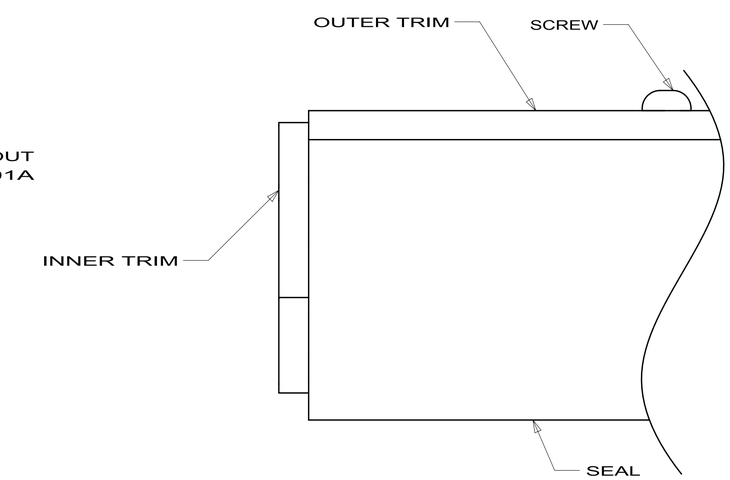

FABWELL SDW

TRIM ASM-SLIDEOUT,SIDE

2 151763

4/27/2010

DWG NO 159417

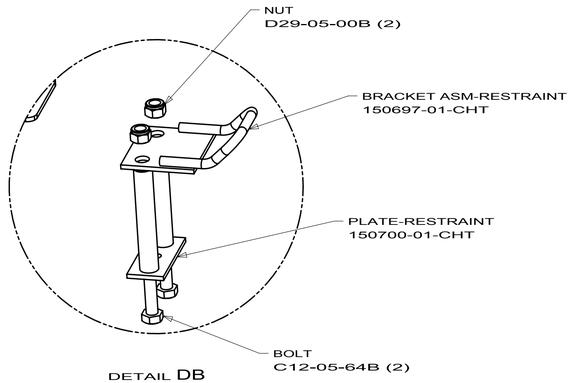

DETAIL DB

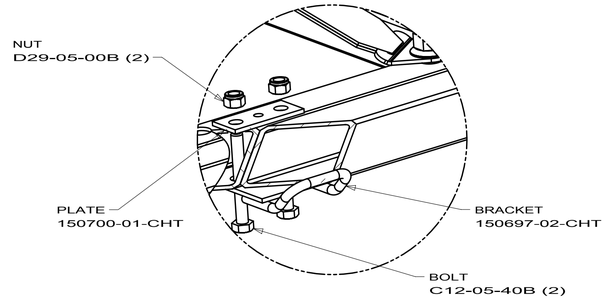

DETAIL VBC

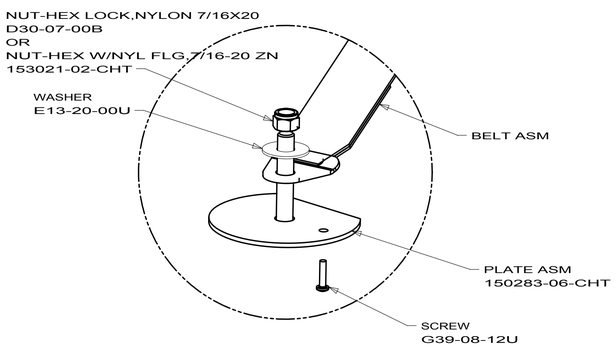

DETAIL VBD

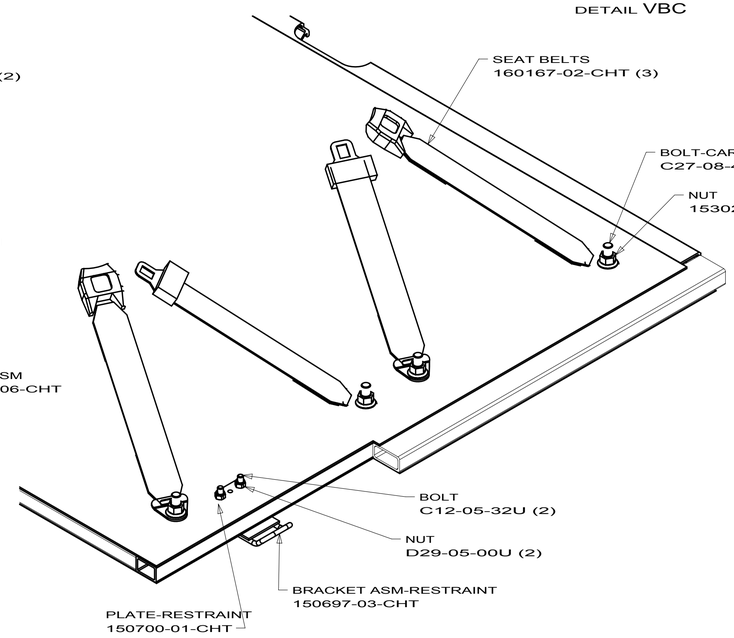

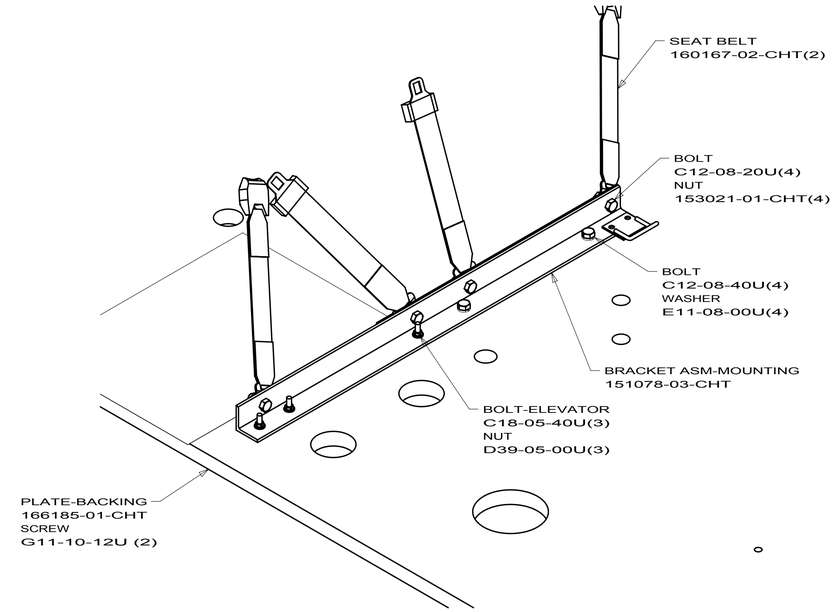

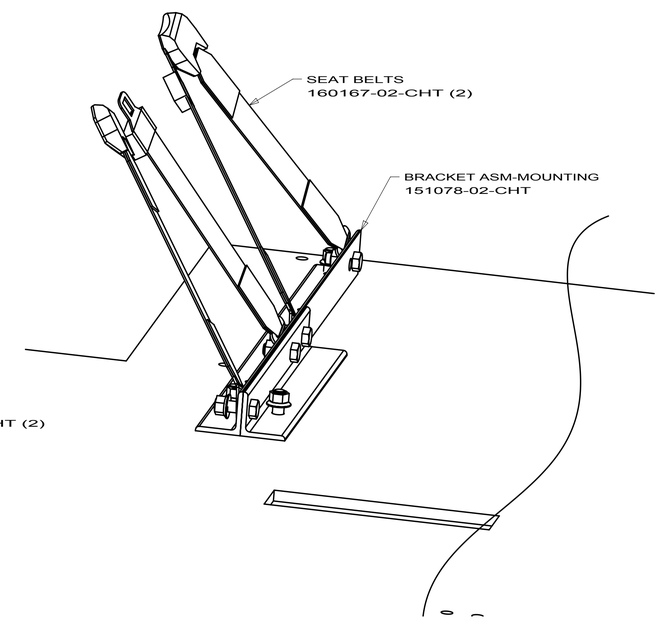

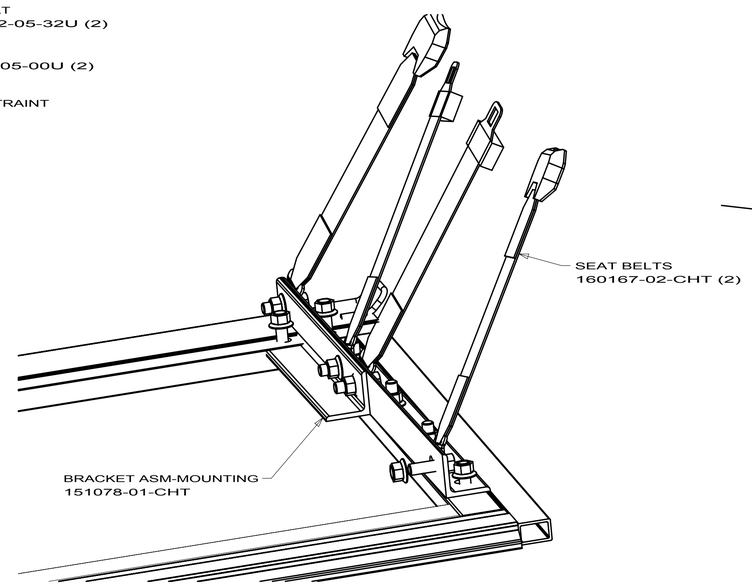

SEAT BELT
160167-01-CHT 2 X 102" BLACK
160167-02-CHT 2 X 90" BLACK

FIRST USED	07 MOTORHOMES
	DO NOT SCALE DRAWING
TITLE:	SEAT BELT INSTL
SHEET 1	PART NO 159417 REV

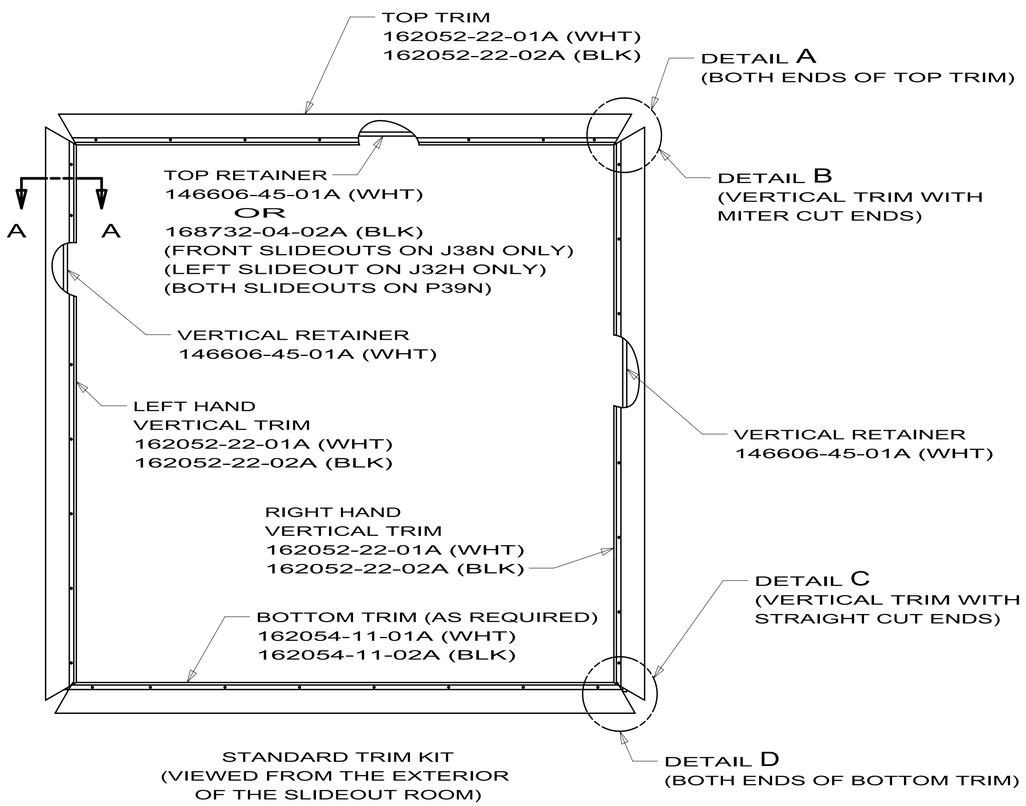

STANDARD TRIM KIT
(VIEWED FROM THE EXTERIOR
OF THE SLIDEOUT ROOM)

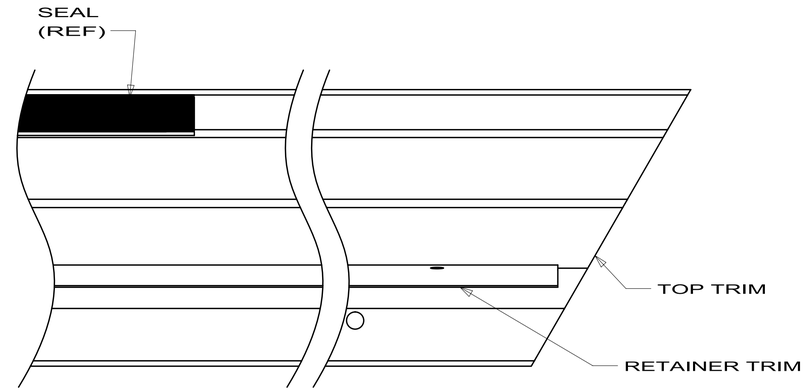

DETAIL A
(TOP TRIM)
(VIEWED FROM THE BACKSIDE OF THE TRIM)

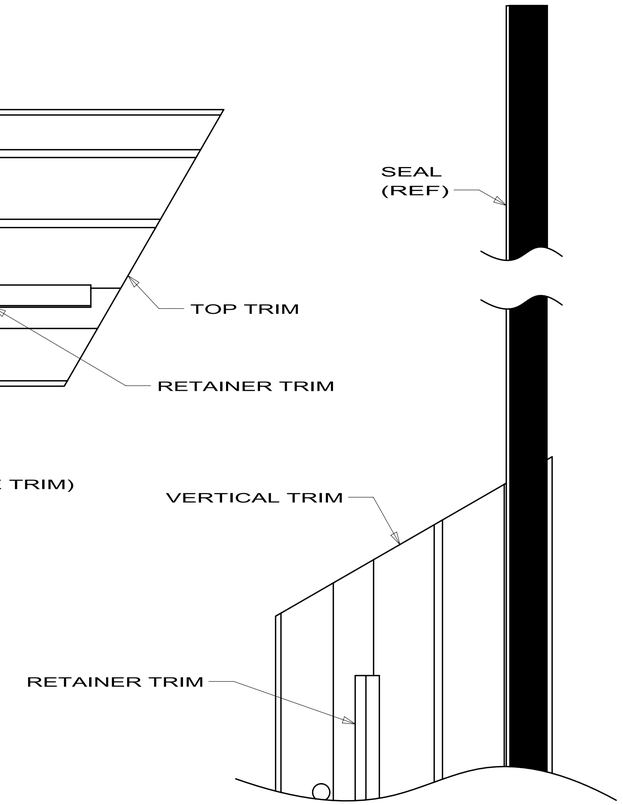

DETAIL B
(ALL MITER CUT VERTICAL TRIM)
(VIEWED FROM THE BACKSIDE OF THE TRIM)

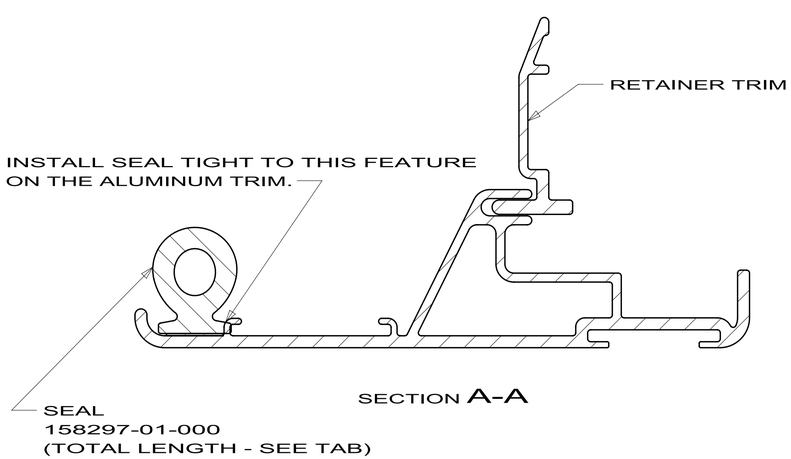

SECTION A-A

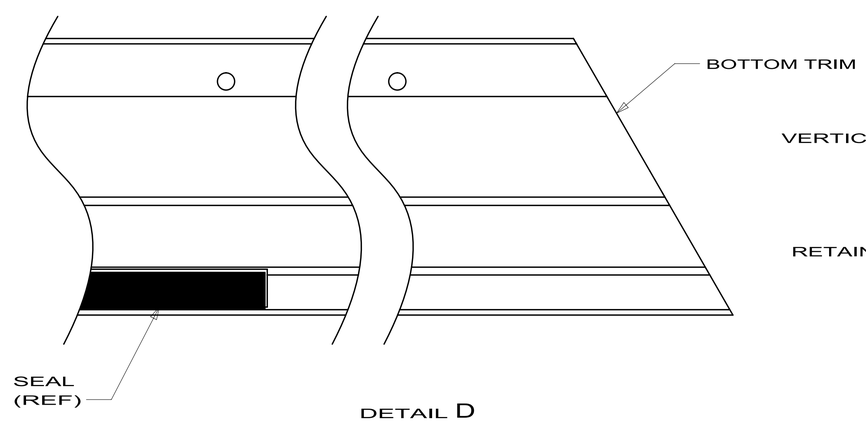

DETAIL D
(BOTTOM TRIM)
VIEWED FROM THE BACKSIDE OF THE TRIM)

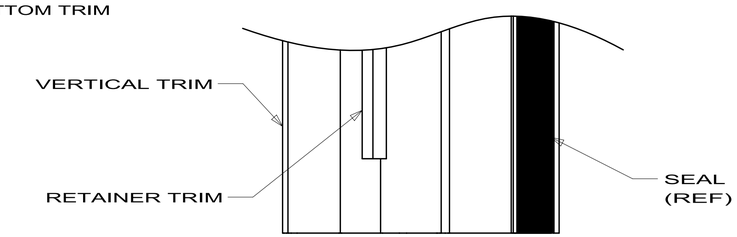

DETAIL C
(ALL STRAIGHT CUT VERTICAL TRIM)
(VIEWED FROM THE BACKSIDE OF THE TRIM)

2007 MOTORHOMES

TRIM KIT-EXTERIOR,SLIDEOUT

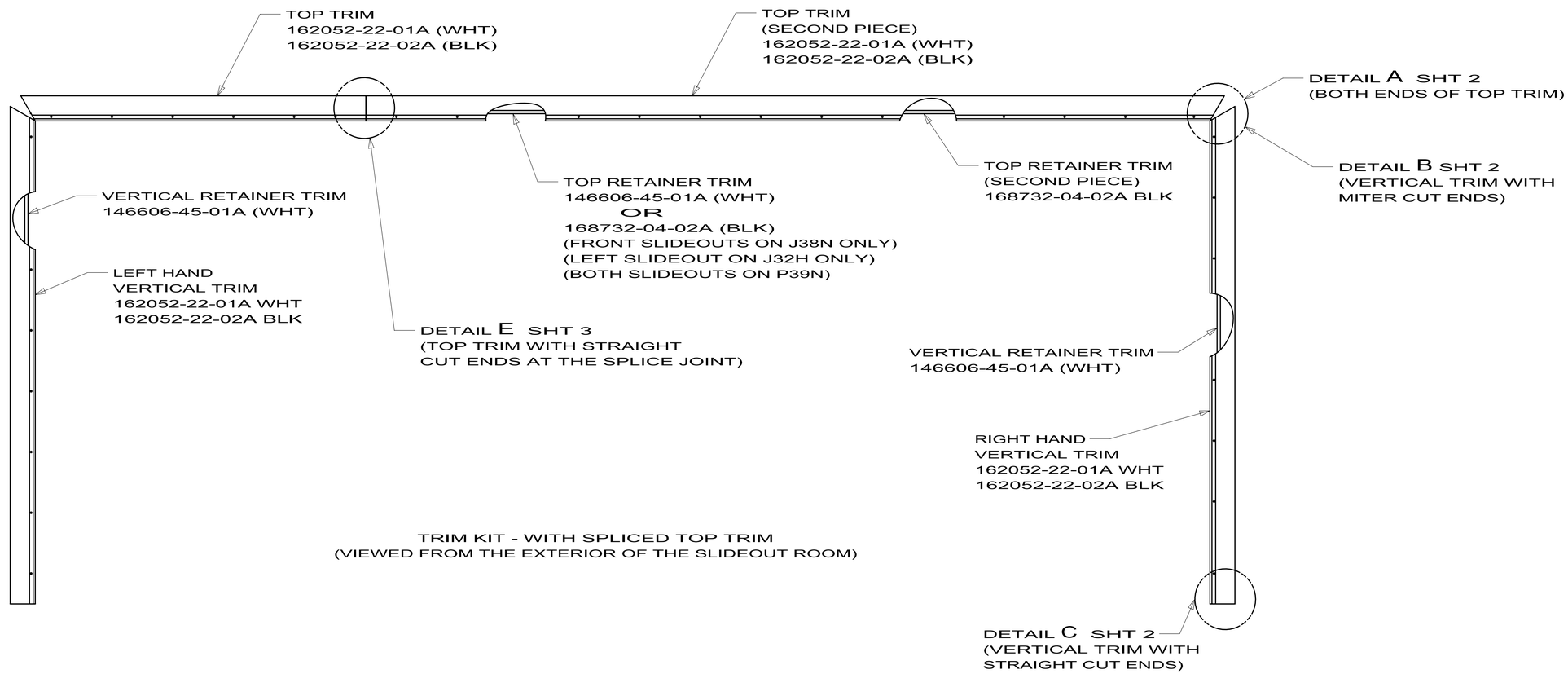

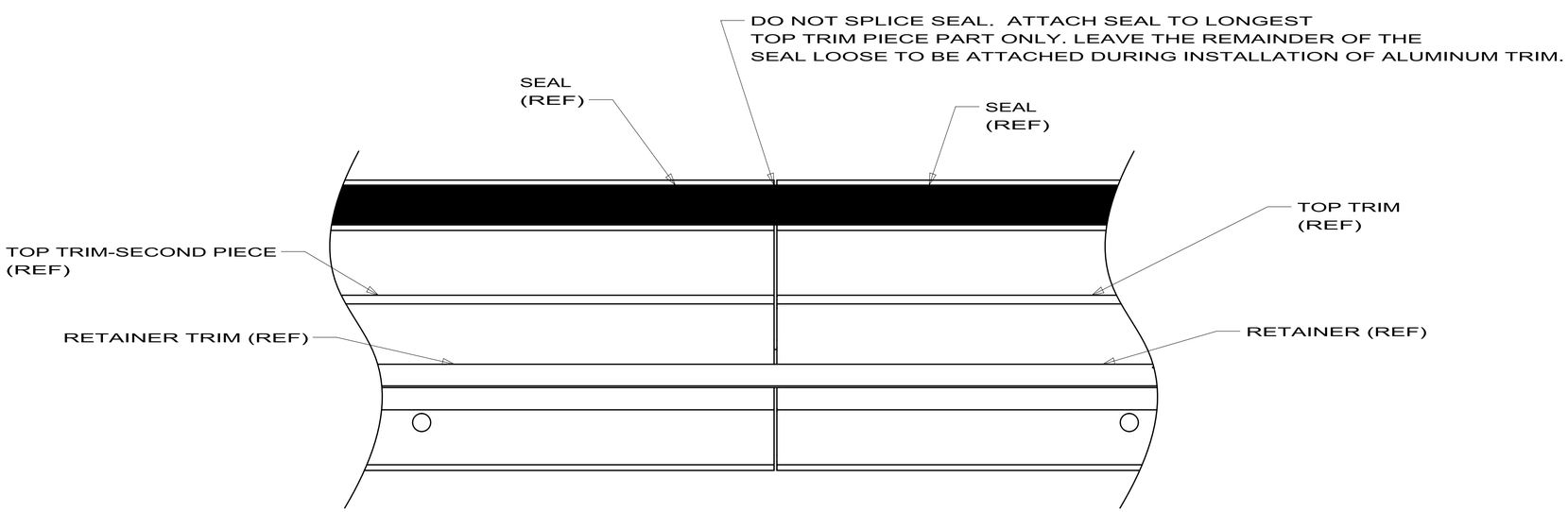

DETAIL E

(SPLICE IN TOP TRIM.)
(SHOWN FROM THE BACKSIDE OF TRIM.)

162495-01-01A, 162495-02-01A

KEY	PART NUMBER	U/M	DESCRIPTION	VENDOR NO.
	162495-01-700	EA	BUTTON-DBL. PLAS. SNAP	DP130

COPYRIGHT © 2009 WINNEBAGO INDUSTRIES INC.

162834-01-000

KEY	PART NUMBER	U/M	DESCRIPTION	VENDOR NO.
	131281-01-702	EA	PIN/CLEVIS-1/4" PLATED	1213190
	131281-01-704	EA	HAIRPIN/COTTER - 3/8" SPRING	1213460
	138173-01-701	EA	POP RIVET - SS 3/16"X1/4"	1214630
	138173-01-707	EA	WEAR PUCK - PLASTIC F/DRIVE	1612523
	148875-01-700	EA	PIN/COTTER - 3/32" X 1/2"	1213520
	148875-01-703	EA	NUT - PLASTIC - 1"	1612548
	148875-01-705	EA	MOTOR/LINEAR - SLIDE ROOM	1820111
	149165-01-700	EA	BEARING - 5/8" ID	1102015
	149165-01-701	EA	PIN/CLEVIS - 1/4" X 2 7/8"	1213204
	149165-01-703	EA	SEAL/RUBBER - INNER FRAME	1612007
	149165-01-704	EA	SEAL/LOWER ROOM - “Z”	1612009
	149165-01-705	EA	DRIVE/WORM SCREW - 30"	1820400

COPYRIGHT © 2009 WINNEBAGO INDUSTRIES INC.

DWG NO	SLIDEOUT SLUG SIZE △2	TOP TRIM	TOP TRIM (SECOND PIECE)	RH VERT TRIM	LH VERT TRIM	LH VERT TRIM (SECOND PIECE)	SUPPORT-ASM	SUPPORT ASM (SECOND PIECE)	TOTAL SEAL LENGTH △3
174648-01	1907 X 3915	139624-09-CHT	–	139624-01-CHT	139624-02-CHT	–	125466-01-CHT	–	7960
174648-02	1788 X 1935	169060-02-CHT	–	139624-51-CHT	139624-50-CHT	–	–	–	5750
174648-03	1907 X 5535	169060-28-CHT	169060-21-CHT	139624-01-CHT	139624-02-CHT	–	125466-22-CHT	155339-17-CHT	9590
174648-04	1886 X 2835	169329-08-CHT	–	139624-18-CHT	139624-19-CHT	–	–	–	6850
174648-05	1907 X 1935	169060-02-CHT	–	139624-01-CHT	139624-02-CHT	–	–	–	5990
174648-06	1886 X 5535	169329-28-CHT	169329-21-CHT	139624-18-CHT	139624-19-CHT	–	–	–	9550
174648-07	1801 X 2535	139624-23-CHT	–	139624-01-CHT	139624-02-CHT	–	125466-23-CHT	–	6380
174648-08	1804 X 2939	139624-66-CHT	–	139624-01-CHT	139624-02-CHT	–	125466-13-CHT	–	6790
174648-09	1801 X 3585	169060-13-CHT	–	139624-01-CHT	139624-02-CHT	–	125466-02-CHT	–	7430
174648-10	1635 X 2226	139624-82-CHT	–	139624-37-CHT	139624-38-CHT	–	–	–	5740
174648-11	2057 X 3915	139624-09-CHT	–	139624-47-CHT	139624-46-CHT	–	–	–	8270
174648-12	1897 X 7263	139624-65-CHT	139624-64-CHT	139624-25-CHT	139624-26-CHT	–	125466-11-CHT	125468-10-CHT	11300
174648-13	1948 X 3585	139624-04-CHT	–	139624-41-CHT	139624-42-CHT	–	–	–	7720
174648-14	2057 X 2985	169329-09-CHT	–	139624-45-CHT	139624-44-CHT	–	–	–	7340
174648-15	1967 X 7485	139624-92-CHT	171623-02-CHT	139624-99-CHT	171623-01-CHT	–	–	–	11660
174648-16	1635 X 2116	139624-84-CHT	–	139624-37-CHT	139624-38-CHT	–	–	–	5630
174648-17	2057 X 3585	139624-06-CHT	–	139624-59-CHT	139624-60-CHT	–	125466-02-CHT	–	7940
174648-18	1948 X 2116	139624-84-CHT	–	139624-41-CHT	139624-42-CHT	–	–	–	6250
174648-19	2057 X 4213	153113-03-CHT	–	139624-45-CHT	139624-44-CHT	–	–	–	8570
174648-20	2057 X 3270	153113-05-CHT	–	139624-45-CHT	139624-44-CHT	–	–	–	7630
174648-21	1948 X 2176	139624-90-CHT	–	139624-41-CHT	139624-42-CHT	–	–	–	6310
174648-22	2057 X 1821	139624-86-CHT	–	139624-41-CHT	139624-42-CHT	–	–	–	6180
174648-23	2057 x 4561	153113-11-CHT	–	139624-45-CHT	139624-44-CHT	–	–	–	8920
174648-24	2057 x 3780	153113-10-CHT	–	139624-45-CHT	139624-44-CHT	–	–	–	8140
174648-25	2057 x 3735	169329-17-CHT	–	139624-45-CHT	139624-44-CHT	–	–	–	8090
174648-26	2057 x 4635	169060-20-CHT	–	139624-41-CHT	139624-42-CHT	–	125466-02-CHT	–	8990
174648-27	1635 x 1935	169060-02-CHT	–	139624-37-CHT	139624-38-CHT	–	–	–	5450
174648-28	2057 x 6735	169329-36-CHT	169329-21-CHT	139624-45-CHT	139624-44-CHT	–	–	–	11090
174648-29	2057 x 4935	169329-24-CHT	169329-21-CHT	139624-45-CHT	139624-44-CHT	–	–	–	9290
174648-30	2057 x 3850	169060-15-CHT	–	139624-47-CHT	139624-46-CHT	–	125466-18-CHT	–	8200
174648-31	1978 x 7785	169329-36-CHT	169329-22-CHT	139624-94-CHT	139624-93-CHT	–	169689-02-CHT	169689-01-CHT	11980
174648-32	1801 x 2235	169060-04-CHT	–	139624-51-CHT	139624-50-CHT	–	–	–	6080
174648-33	2057 x 4185	169060-17-CHT	–	139624-47-CHT	139624-80-CHT	139624-81-CHT	125466-19-CHT	–	8540
174648-34	2057 x 4935	169060-24-CHT	169060-21-CHT	139624-47-CHT	139624-46-CHT	–	169719-01-CHT	–	9290
174648-35	2057 x 3735	169060-14-CHT	–	139624-47-CHT	139624-46-CHT	–	125466-20-CHT	–	8090
174648-36	2057 x 4035	169060-16-CHT	–	139624-47-CHT	139624-46-CHT	–	125466-21-CHT	–	8390
174648-37	2057 x 4935	169329-24-CHT	169329-21-CHT	139624-45-CHT	139624-44-CHT	–	169689-03-CHT	–	9290
174648-38	1801 x 1935	169060-02-CHT	–	139624-25-CHT	139624-26-CHT	–	–	–	5780
174648-39	2057 x 4335	169060-18-CHT	–	139624-41-CHT	139624-42-CHT	–	125466-26-CHT	–	8690
174648-40	2057 x 5085	169329-25-CHT	169329-21-CHT	139624-45-CHT	139624-44-CHT	–	–	–	9440
174648-41	1718 x 2583	139624-73-CHT	–	139624-75-CHT	139624-74-CHT	–	–	–	6260
174648-42	1907 x 3435	139624-95-CHT	–	139624-25-CHT	139624-26-CHT	–	125466-24-CHT	–	7490
174648-43	1908 x 1590	139624-72-CHT	–	139624-25-CHT	139624-26-CHT	–	–	–	5650
174648-44	1907 x 3925	139624-91-CHT	–	139624-25-CHT	139624-26-CHT	–	–	–	7980
174648-45	1804 x 2566	139624-23-CHT	–	139624-01-CHT	139624-02-CHT	–	125466-09-CHT	–	6420
174648-46	1718 x 3495	139624-07-CHT	–	139624-13-CHT	139624-14-CHT	–	125466-03-CHT	–	7170
174648-47	1475 x 1926	139624-04-CHT	–	139624-20-CHT	139624-21-CHT	–	–	–	5120
174648-48	1804 x 2535	169060-06-CHT	–	139624-01-CHT	139624-02-CHT	–	–	–	6390
174648-49	1804 x 3495	139624-07-CHT	–	139624-01-CHT	139624-02-CHT	–	125466-03-CHT	–	7350
174648-50	1804 x 1926	139624-04-CHT	–	139624-01-CHT	139624-02-CHT	–	–	–	5780
174648-51	1718 x 1865	139624-35-CHT	–	139624-13-CHT	139624-14-CHT	–	–	–	5540

△3. TOTAL SEAL LENGTH = (SLUG HEIGHT X 2) + SLUG LENGTH + 240mm

△2. SLIDEOUT SLUG SIZE IS MEASURED TO THE SURFACE OF THE ALUMINUM TUBES AND LISTED BY HEIGHT X LENGTH.

1. TRIM VIEWED FROM THE INSIDE OF THE SLIDEOUT ROOM UNLESS NOTED.

NOTES:

RELEASE	REV A	DATE	DWG NO 174648

REV	ZONE	REVISION RECORD	DATE	DFTR-ORIG

WINNEBAGO INDUSTRIES

COPYRIGHT 2009
WINNEBAGO
INDUSTRIES, INC.

DFTR | ORIG. DATE
CHKR
P.E.
M.E.
DSNR

ALL DIMENSIONS ARE IN MILLIMETERS

FIRST USED: 2010 MOTORHOMES

UNSPECIFIED TOLERANCES ARE:
WHOLE DIM (X) : 3
ONE-PLACE (X.X) : 1.5
TWO-PLACE (X.XX) : 0.50
ANGLE : 1°

MATERIAL:

THIRD ANGLE PROJECTION

DO NOT SCALE DRAWING

TITLE: TRIM KIT-INTERIOR,SLIDEOUT

SHEET 1 OF 4 | PART NO 174648 | REV

REF:

10/15/2009

DWG NO 174648

DWG NO	SLIDEOUT SLUG SIZE 2	TOP TRIM	TOP TRIM (SECOND PIECE)	RH VERT TRIM	LH VERT TRIM	LH VERT TRIM (SECOND PIECE)	SUPPORT-ASM	SUPPORT ASM (SECOND PIECE)	TOTAL SEAL LENGTH 3
174648-52	1788 x 1926	139624-04-CHT	–	139624-25-CHT	139624-26-CHT	–	–	–	5750
174648-53	1804 x 1865	139624-35-CHT	–	139624-01-CHT	139624-02-CHT	–	–	–	5720
174648-54	1922 x 3495	139624-07-CHT	–	139624-01-CHT	139624-02-CHT	–	125466-03-CHT	–	7580
174648-55	1718 x 3495	139624-07-CHT	–	139624-18-CHT	139624-19-CHT	–	125466-03-CHT	–	7170
174648-56	1718 x 2167	139624-32-CHT	–	139624-13-CHT	139624-14-CHT	–	–	–	5850
174648-57	1428 x 1782	139624-76-CHT	–	139624-83-CHT	139624-78-CHT	–	–	–	4880
174648-58	1718 x 2583	139624-28-CHT	–	139624-13-CHT	139624-14-CHT	–	125466-17-CHT	–	6260
174648-59	1718 x 1828	139624-79-CHT	–	139624-13-CHT	139624-14-CHT	–	–	–	5510
174648-60	1428 x 1782	139624-76-CHT	–	139624-77-CHT	139624-78-CHT	–	–	–	4880
174648-61	1635 x 2085	169060-03-CHT	–	139624-37-CHT	139624-38-CHT	–	–	–	5595
174648-62	1804 x 2805	139264-27-CHT	–	139624-01-CHT	139624-02-CHT	–	125466-08-CHT	–	6660
174648-63	1907 x 3585	139624-06-CHT	–	139624-01-CHT	139624-02-CHT	–	125466-02-CHT	–	7640
174648-64	2057 x 2835	169329-08-CHT	–	139624-45-CHT	139624-44-CHT	–	–	–	7190
174648-65	1978 x 7185	169060-39-CHT	169060-21-CHT	139624-94-CHT	139624-93-CHT	–	125466-11-CHT	–	11380
174648-66	1907 x 2685	169060-07-CHT	–	139624-25-CHT	139624-26-CHT	–	–	–	6740
174648-67	1801 x 2685	169060-07-CHT	–	139624-01-CHT	139624-02-CHT	–	125466-25-CHT	–	6530
174648-68	1801 x 1935	169060-02-CHT	–	139624-01-CHT	139624-02-CHT	–	–	–	5777
174648-69	1935 x 1935	169060-02-CHT	–	171623-05-CHT	171623-04-CHT	–	–	–	6045
174648-70	1417 x 1935	169060-03-CHT	–	171623-09-CHT	171623-10-CHT	–	–	–	5010
174648-71	1723 x 2235	169060-04-CHT	–	171623-11-CHT	171623-12-CHT	–	–	–	5920
174648-72	1723 x 1935	169060-02-CHT	–	171623-11-CHT	171623-12-CHT	–	–	–	5620
174648-73	1688 x 3885	169060-15-CHT	–	139624-96-CHT	139624-97-CHT	–	125466-18-CHT	–	7500
174648-74	1688 x 1420	139624-98-CHT	–	139624-96-CHT	139624-97-CHT	–	–	–	5045
174648-75	1978 x 7185	139624-64-CHT	171623-08-CHT	171623-07-CHT	171623-06-CHT	–	125468-10-CHT	125466-11-CHT	11380
174648-76	1978 x 7485	139624-92-CHT	171623-02-CHT	171623-07-CHT	171623-06-CHT	–	–	–	11680

FIRST USED
2010 MOTORHOMES

DO NOT SCALE DRAWING

TITLE:
TRIM KIT-INTERIOR,SLIDEOUT

SHEET 2 | PART NO. 174648 | REV

10/15/2009

DWG NO 174648

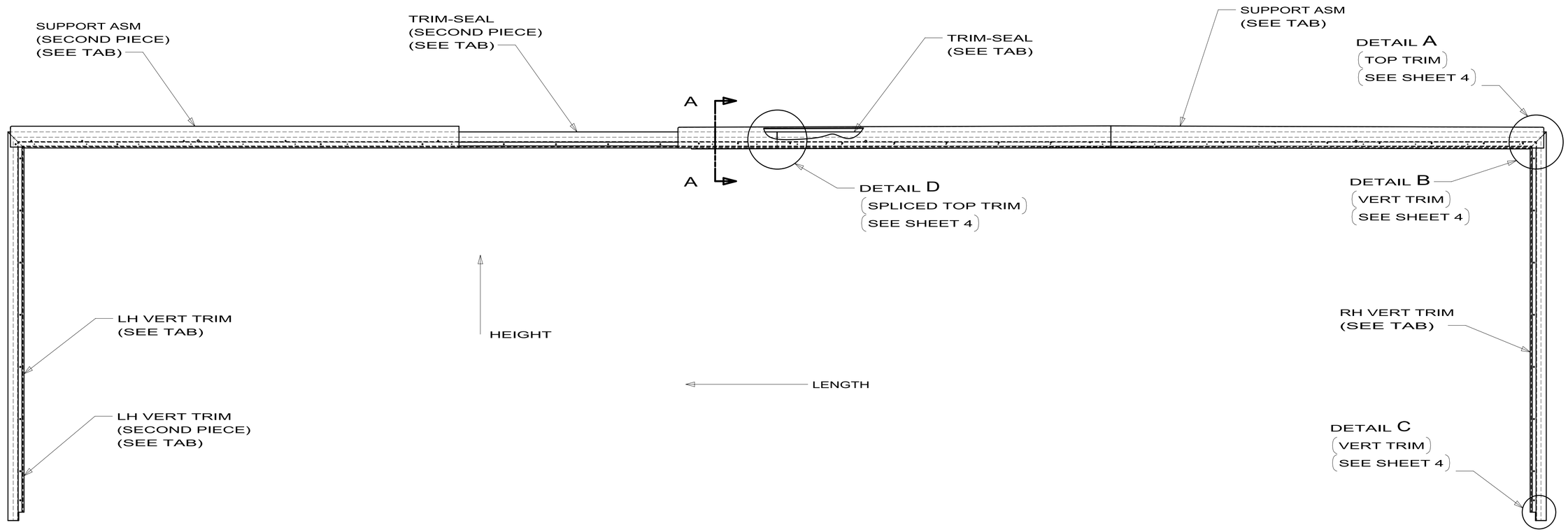

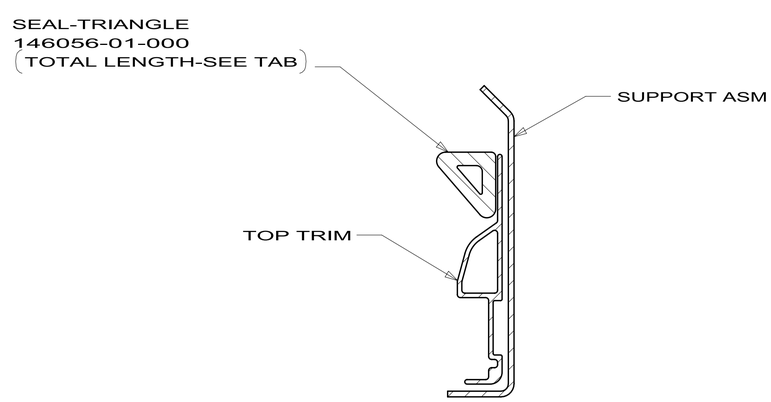

SECTION A-A

FIRST USED	2010 MOTORHOMES
	DO NOT SCALE DRAWING
TITLE:	TRIM KIT-INTERIOR,SLIDEOUT
SHEET 3	PART NO 174648 REV

10/15/2009

DWG NO 174648

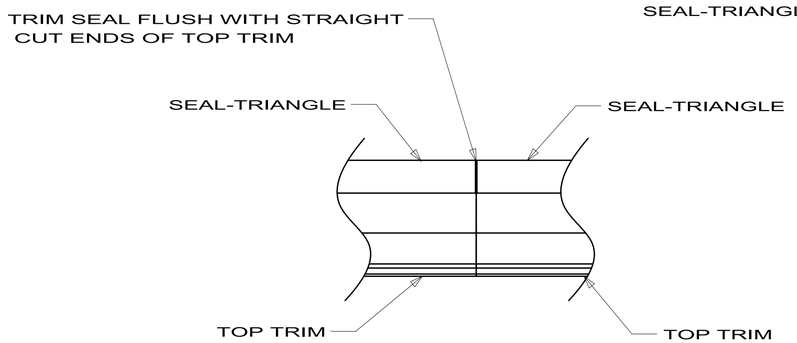

DETAIL D

(USE WITH SPLICED TOP TRIM)

(VIEWED FROM THE BACKSIDE OF THE TRIM)

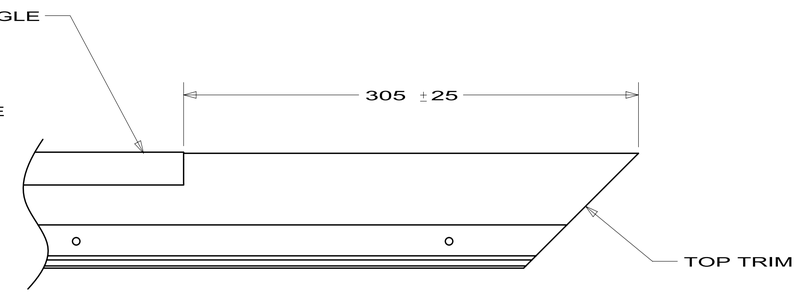

DETAIL A

(MITERED ENDS TOP TRIM)

(VIEWED FROM THE BACKSIDE OF THE TRIM)

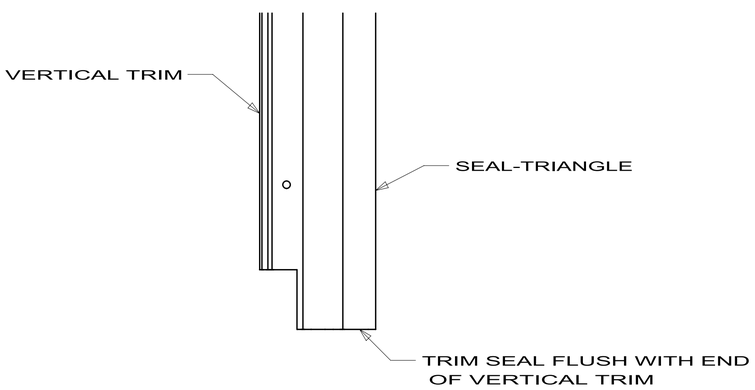

DETAIL C

(BOTTOM OF VERTICAL TRIM)

(VIEWED FROM THE BACKSIDE OF THE TRIM)

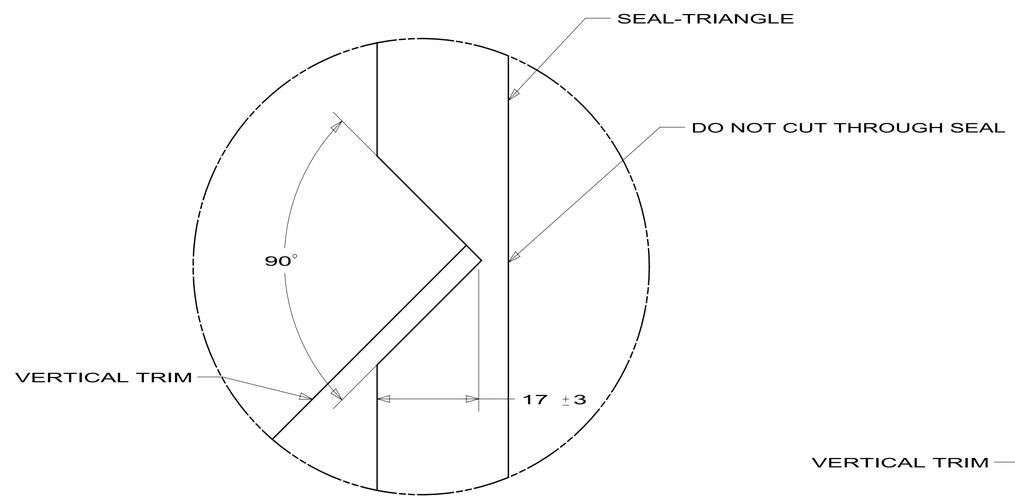

DETAIL E

SEAL IS NOTCHED DURING THE INSTALLATION

OF THE TRIM AND ATTACHED TO THE TOP TRIM

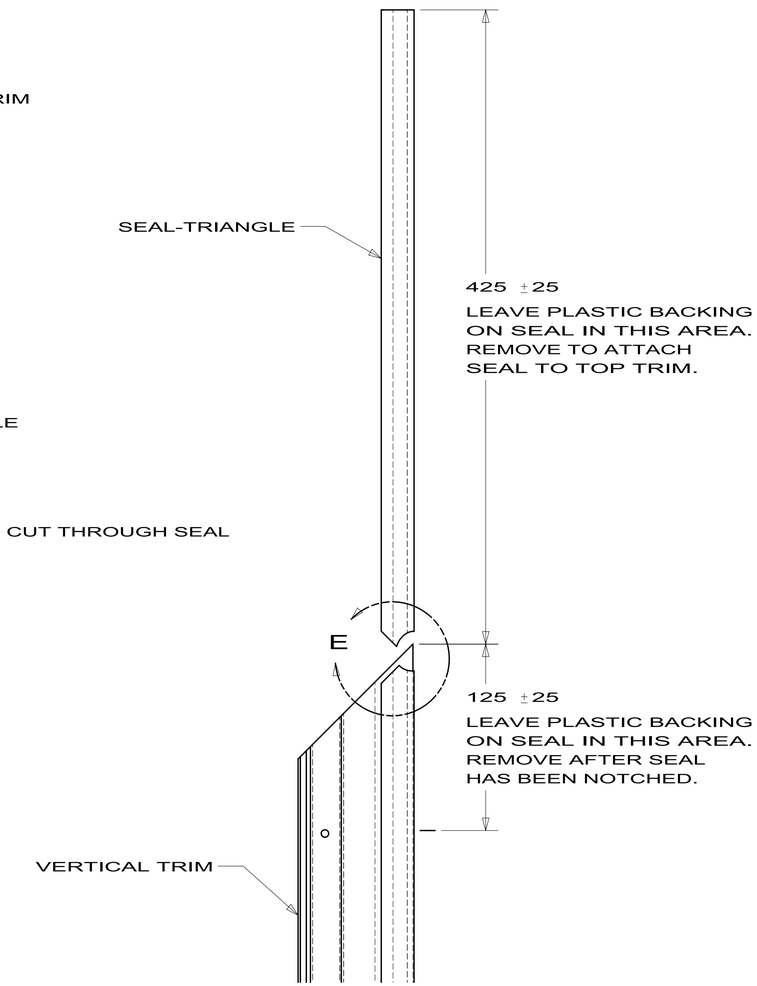

DETAIL B

(MITERED ENDS OF VERTICAL TRIM)

(VIEWED FROM THE BACKSIDE OF THE TRIM)

FIRST USED	2010 MOTORHOMES
	DO NOT SCALE DRAWING
TITLE:	TRIM KIT-INTERIOR,SLIDEOUT
SHEET 4	PART NO 174648 REV

10/15/2009