DWG NO 147148

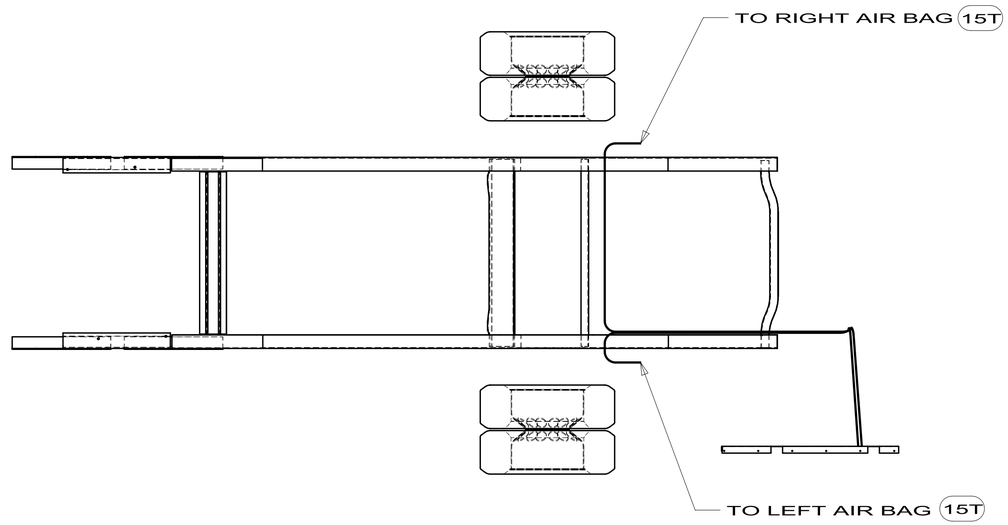

700-SERIES
147148-06-000

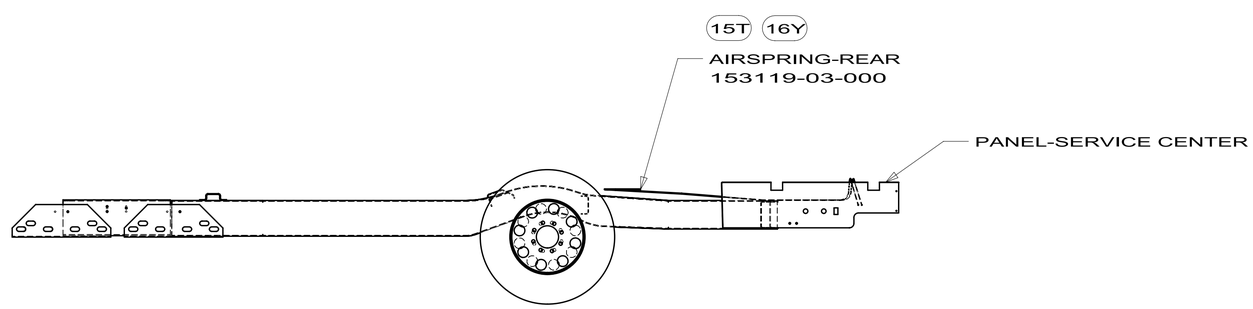

16Y 08 FORD-14,500

15T AIR SPRING REAR

FIRST USED	05 726A
DO NOT SCALE DRAWING	
TITLE:	AIRSPRING INSTL-REAR,AUX
SHEET 2	PART NO. 147148 REV

10/22/2009

RELEASE	REV A	DATE	DWG NO 172223

REV	ZONE	REVISION RECORD	DATE	DFTR-ORIG

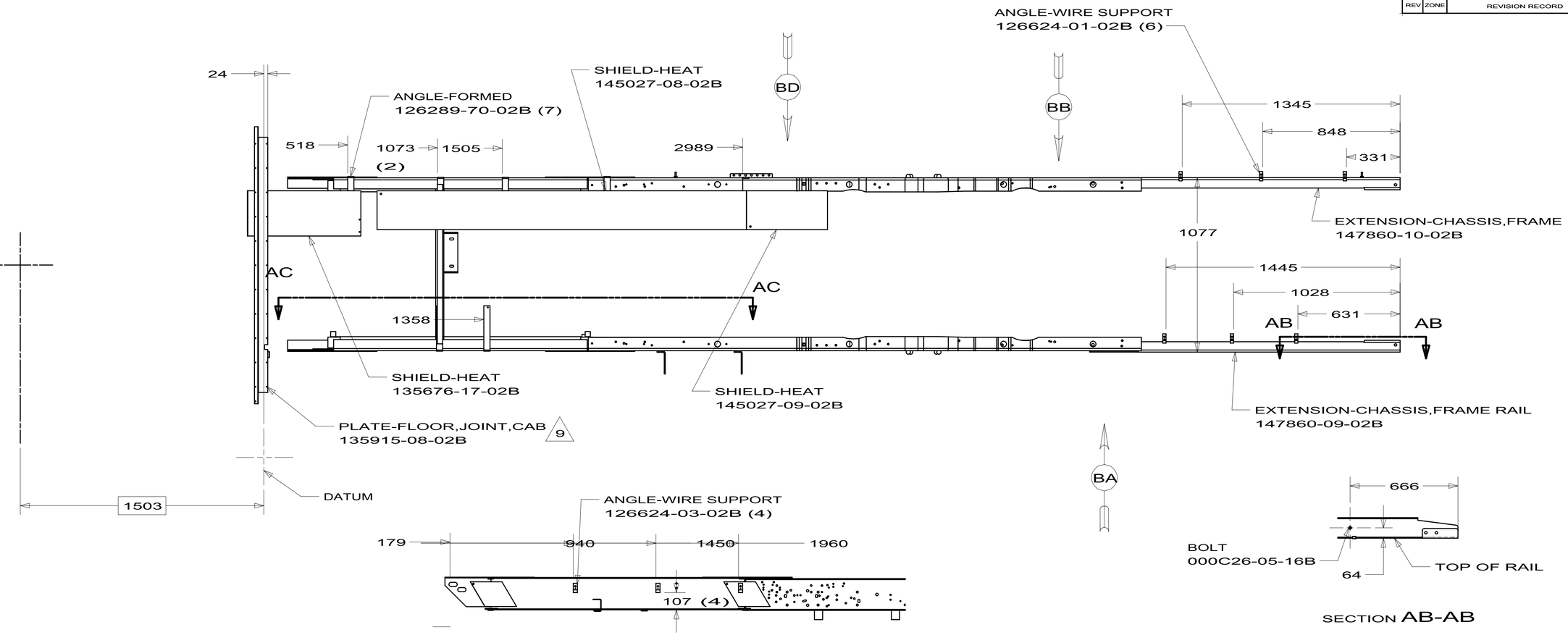

ASM P/N	SHT
172223-13	4
172223-12	3
172223-11	1

NOTES:

5. REMOVE TWO REAR SCREWS ON SEAT BELT MOUNT.

4. WELD PER ES0063, UNLESS OTHERWISE SPECIFIED.

3. SEAL ALL JOINTS OF COMPARTMENTS AND CLOSEOUT PANELS WITH SEALANT 53766-01-000.

2. CLEAN AND E-COAT ALL PIECES PRIOR TO ASSEMBLY.

1. SPRAY ALL WELDS WITH UNDERCOAT 100053-01 OR 100053-03-000.

9. USE 3443mm OF 98408-01-000 ON BOTTOM OF COVER.

8. CUT NOTCHES AFTER WELDMENT.

7. USE SHIMS AS REQUIRED.

6. LEFT CHASSIS RAIL TOOLING HOLE IS USED FOR FIXTURING ASSEMBLY.

SEE CHART

FOR COLOR VARIATIONS OF THIS PART

WINNEBAGO INDUSTRIES
COPYRIGHT 2010 WINNEBAGO INDUSTRIES, INC.

DFTR	ORIG. DATE
CHKR	ALL DIMENSIONS ARE IN MILLIMETERS
P.E.	
M.E.	FIRST USED
DSNR	10 730C

UNSPECIFIED TOLERANCES ARE:
WHOLE DIM (X) : 3
ONE-PLACE (X.X) : 1.5
TWO-PLACE (X.XX) : 0.50
ANGLE : 1°

MATERIAL:

THIRD ANGLE PROJECTION

DO NOT SCALE DRAWING

REFER TO ES0018 FOR FASTENER TIGHTENING GUIDELINES

TITLE: FRAME ASM-CHASSIS,FORD

SHEET 1 OF 9 | PART NO 172223 | REV

REF:

4/15/2010

DWG NO 172223

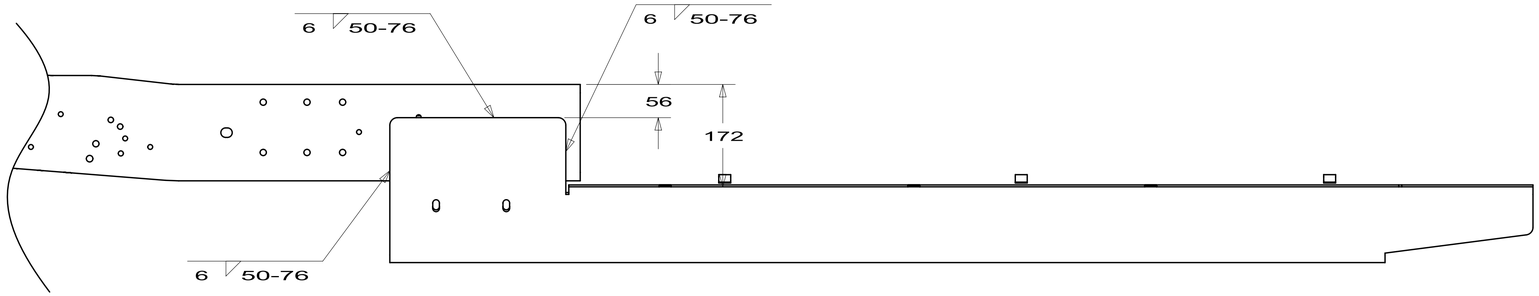

VIEW BA

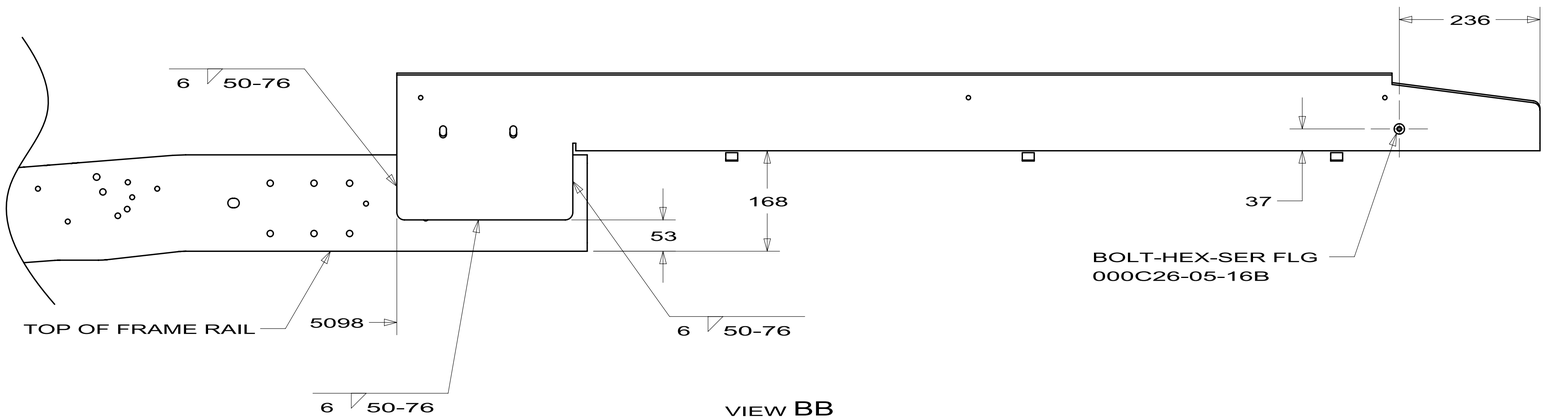

VIEW BB

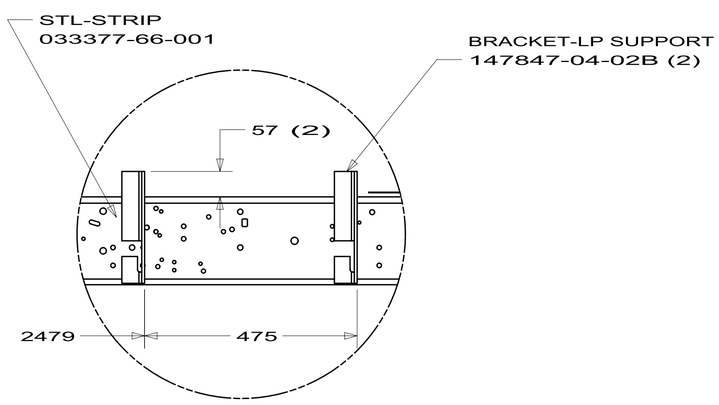

DETAIL BC

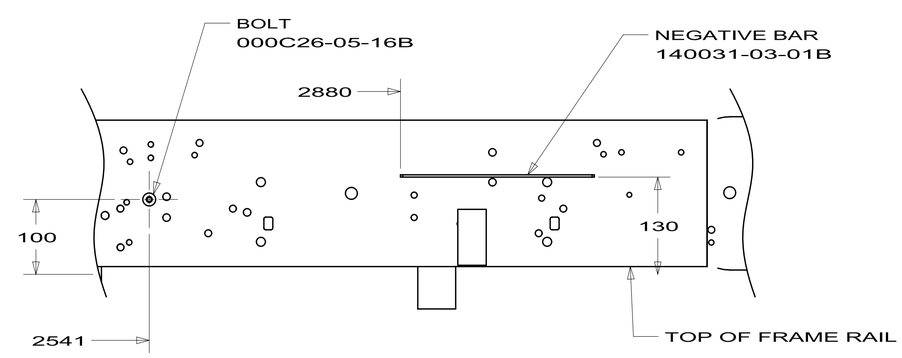

VIEW BD

FIRST USED	10 730C
DO NOT SCALE DRAWING	
TITLE:	FRAME ASM-CHASSIS,FORD
SHEET 2	PART NO 172223 REV

4/15/2010

DWG NO 172223

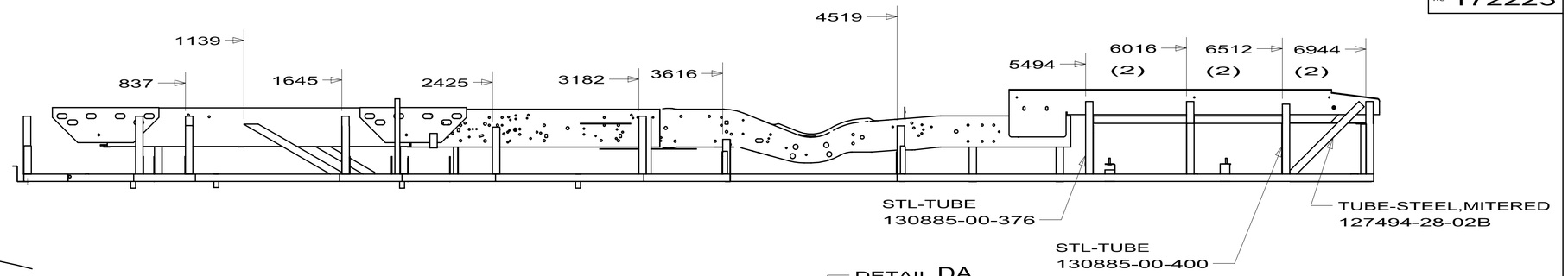

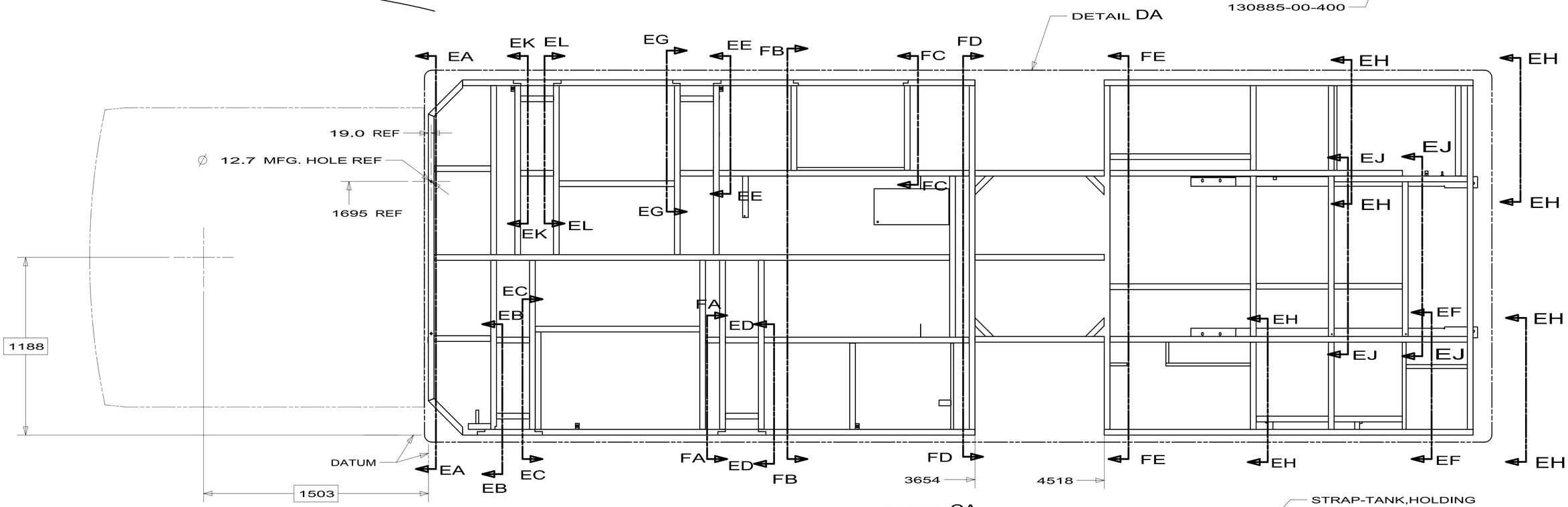

DETAIL CA
FLOOR FRAME ASM
172223-12

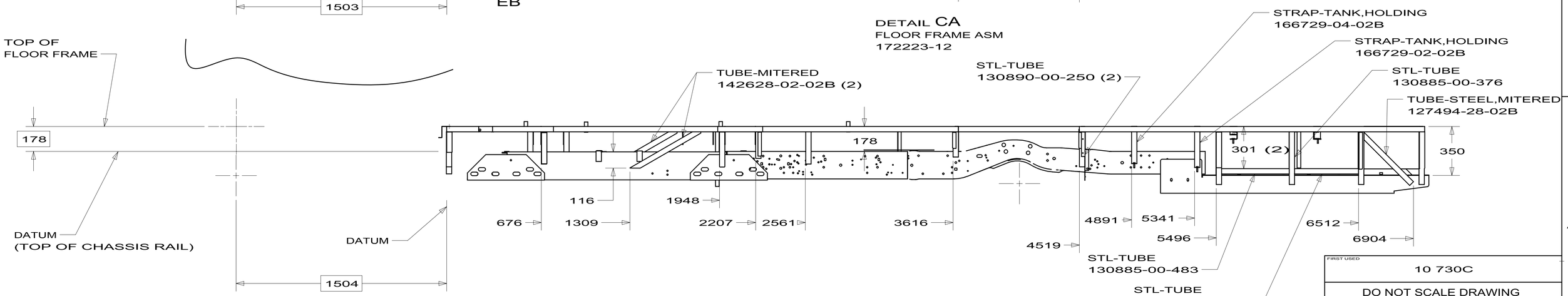

FIRST USED	10 730C
DO NOT SCALE DRAWING	
TITLE:	FRAME ASM-CHASSIS,FORD
SHEET 3	PART NO 172223 REV

4/15/2010

DWG NO 172223

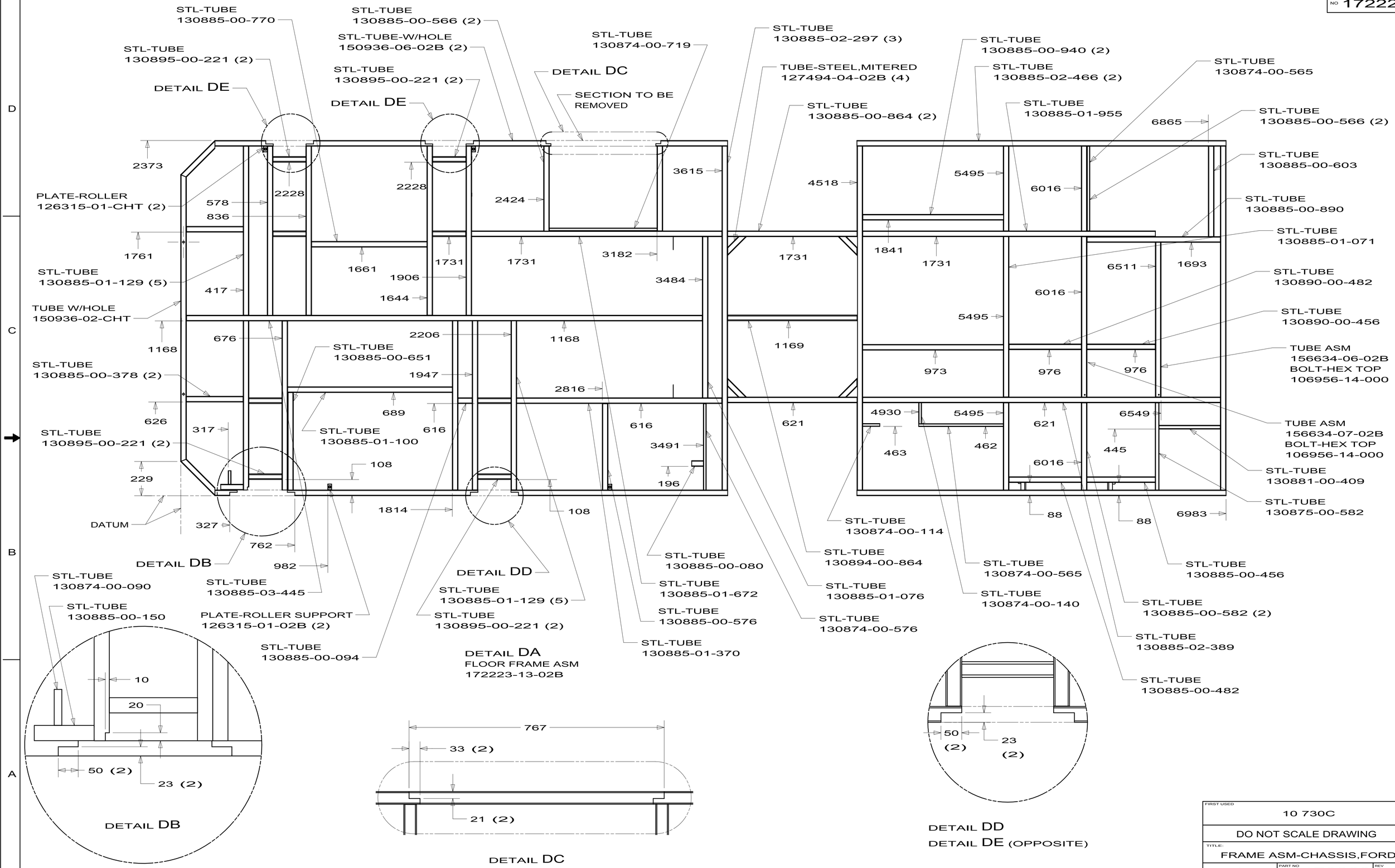

FIRST USED	10 730C
DO NOT SCALE DRAWING	
TITLE:	FRAME ASM-CHASSIS,FORD
SHEET 4	PART NO 172223 REV

4/15/2010

DWG NO 172223

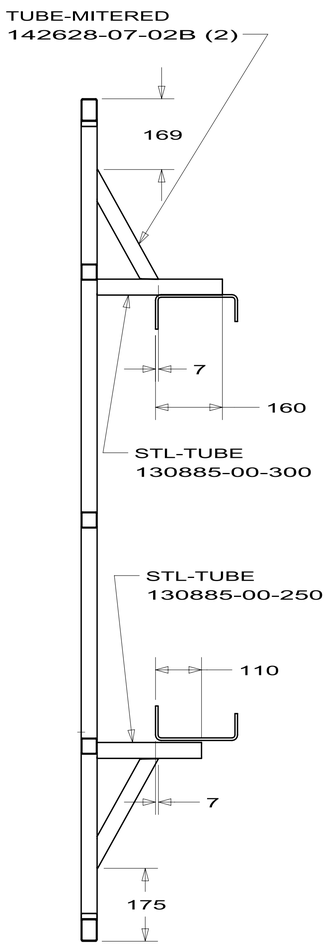

SECTION EA-EA

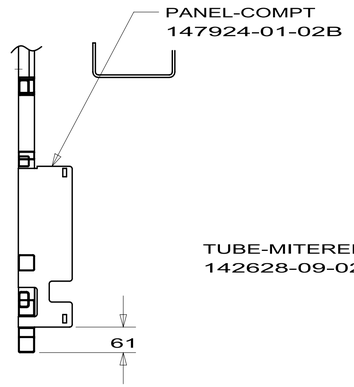

SECTION EB-EB

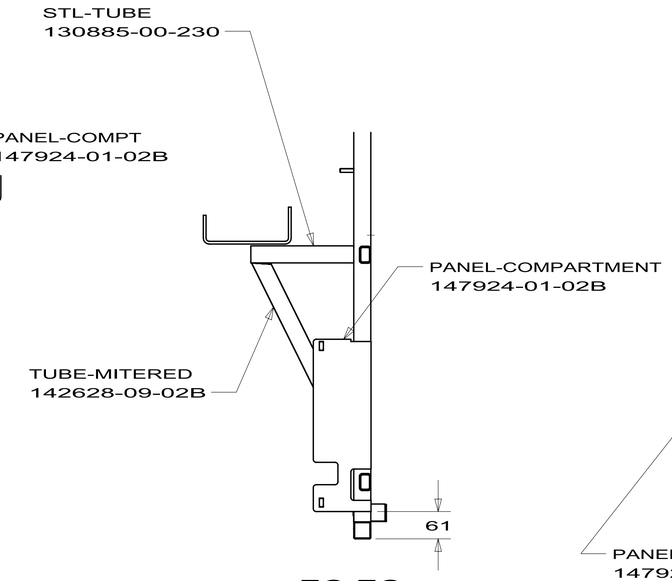

SECTION EC-EC

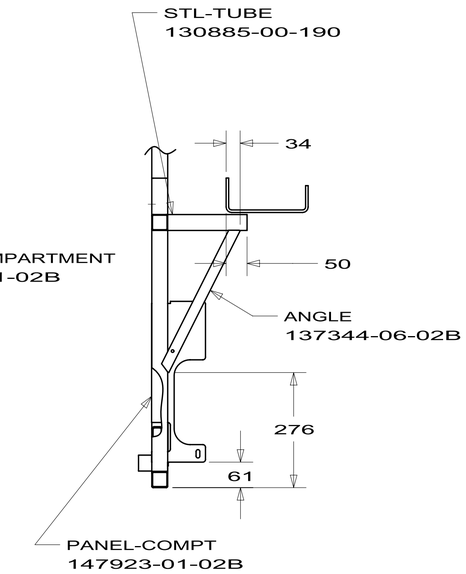

SECTION ED-ED

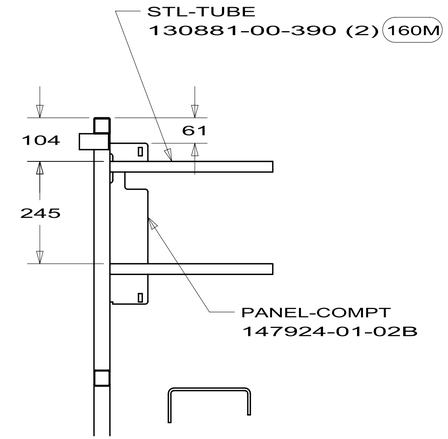

SECTION EE-EE

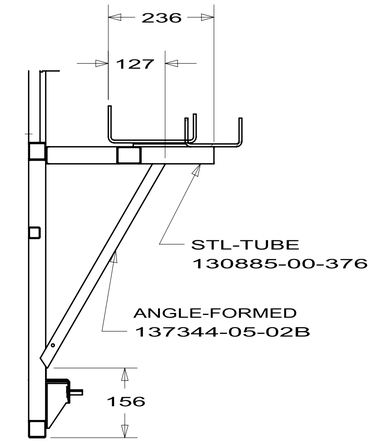

SECTION EF-EF

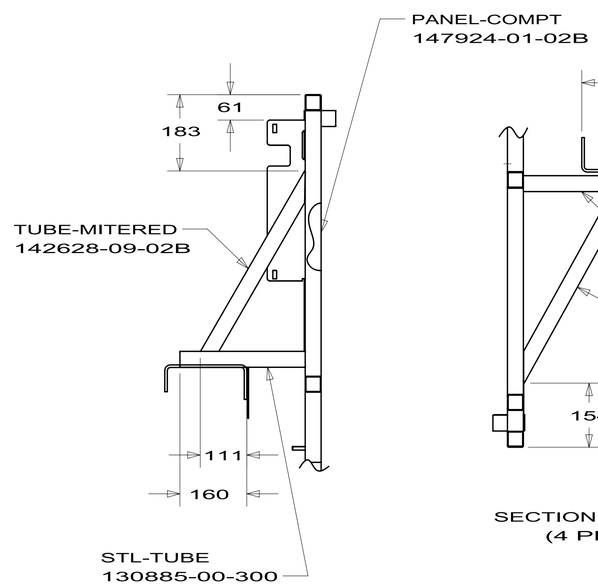

SECTION EG-EG

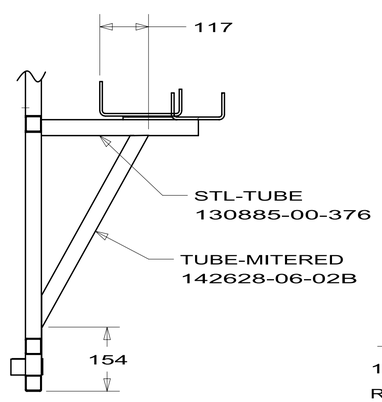

SECTION EH-EH
(4 PLCS)

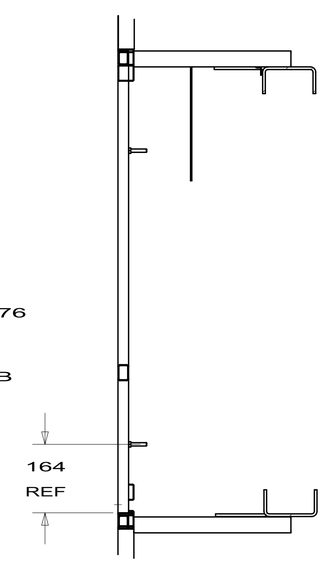

SECTION EJ-EJ
(2 PLCS)

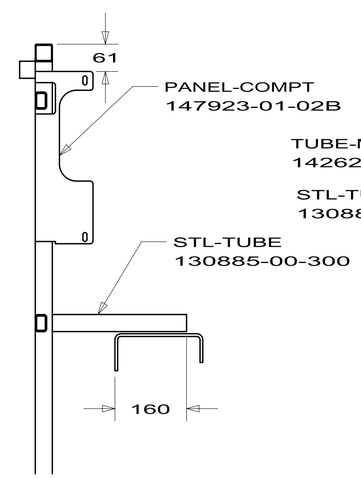

SECTION EK-EK

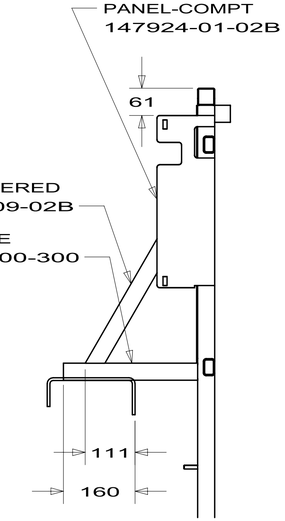

SECTION EL-EL

FIRST USED	10 730C
DO NOT SCALE DRAWING	
TITLE:	FRAME ASM-CHASSIS,FORD
SHEET 5	PART NO 172223 REV

4/15/2010

DWG NO 172223

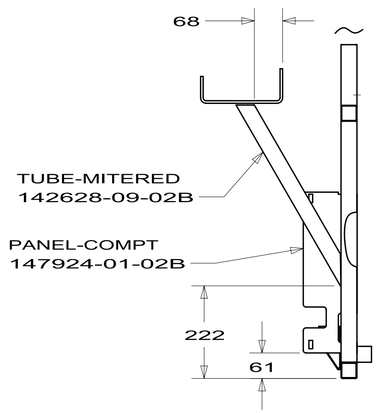

SECTION FA-FA

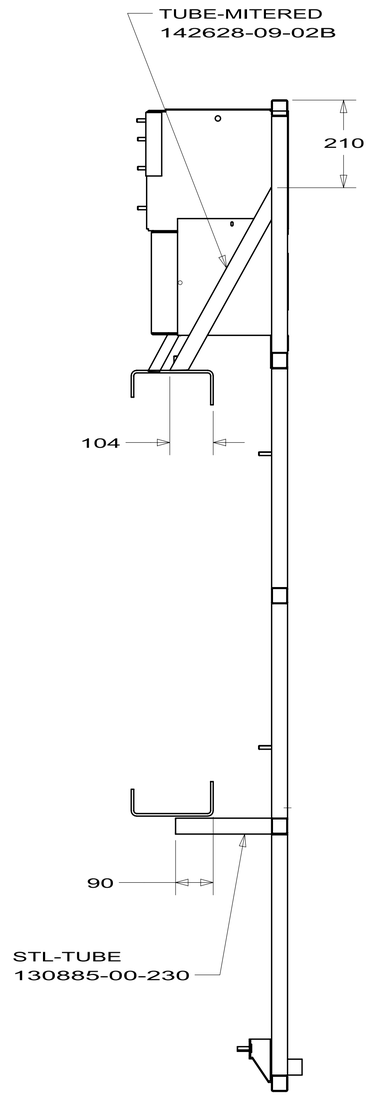

SECTION FB-FB

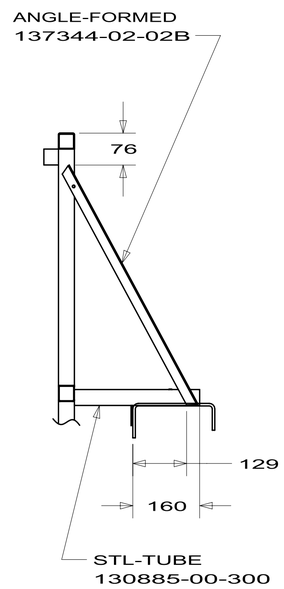

SECTION FC-FC

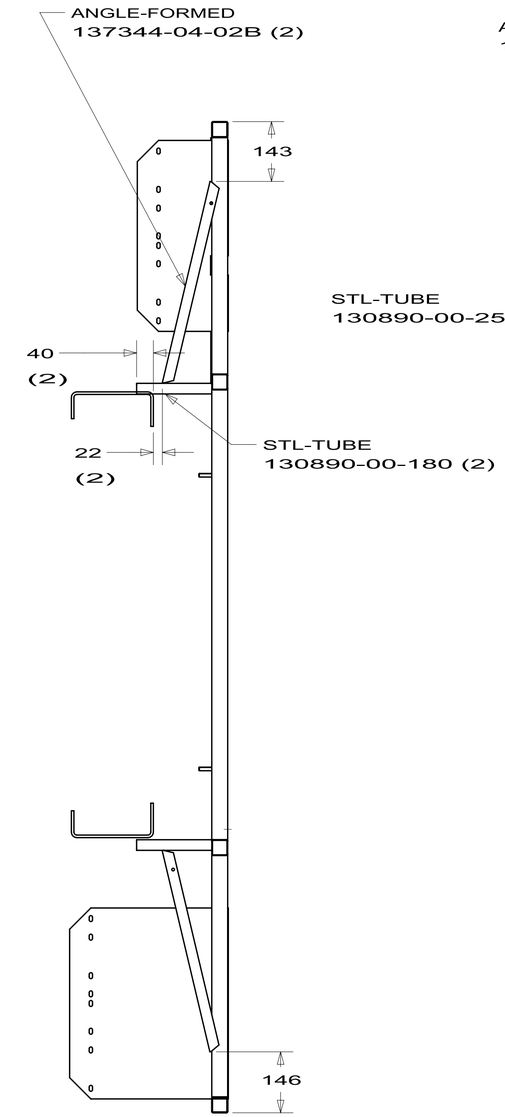

SECTION FD-FD

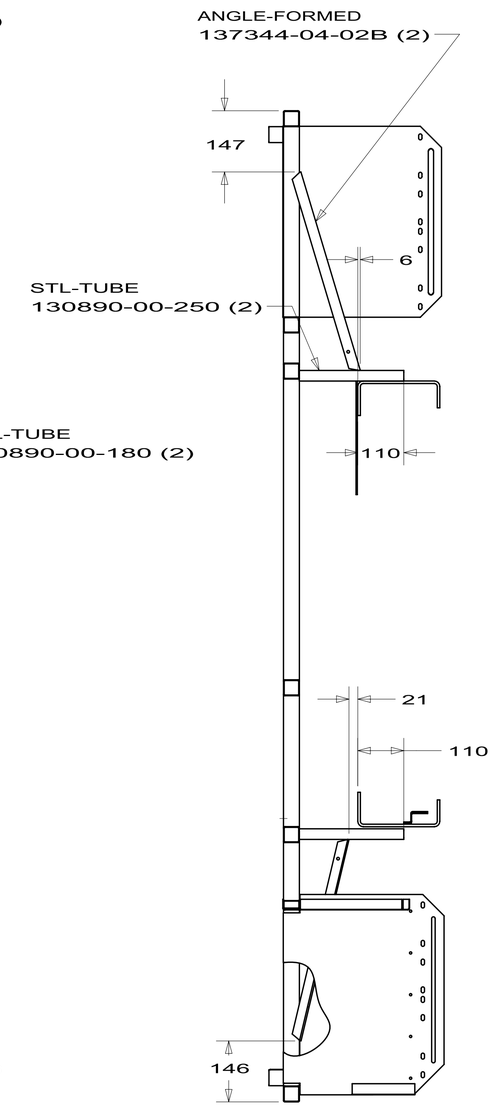

SECTION FE-FE

FIRST USED	10 730C
DO NOT SCALE DRAWING	
TITLE:	FRAME ASM-CHASSIS,FORD
SHEET 6	PART NO 172223 REV

4/15/2010

DWG NO 172223

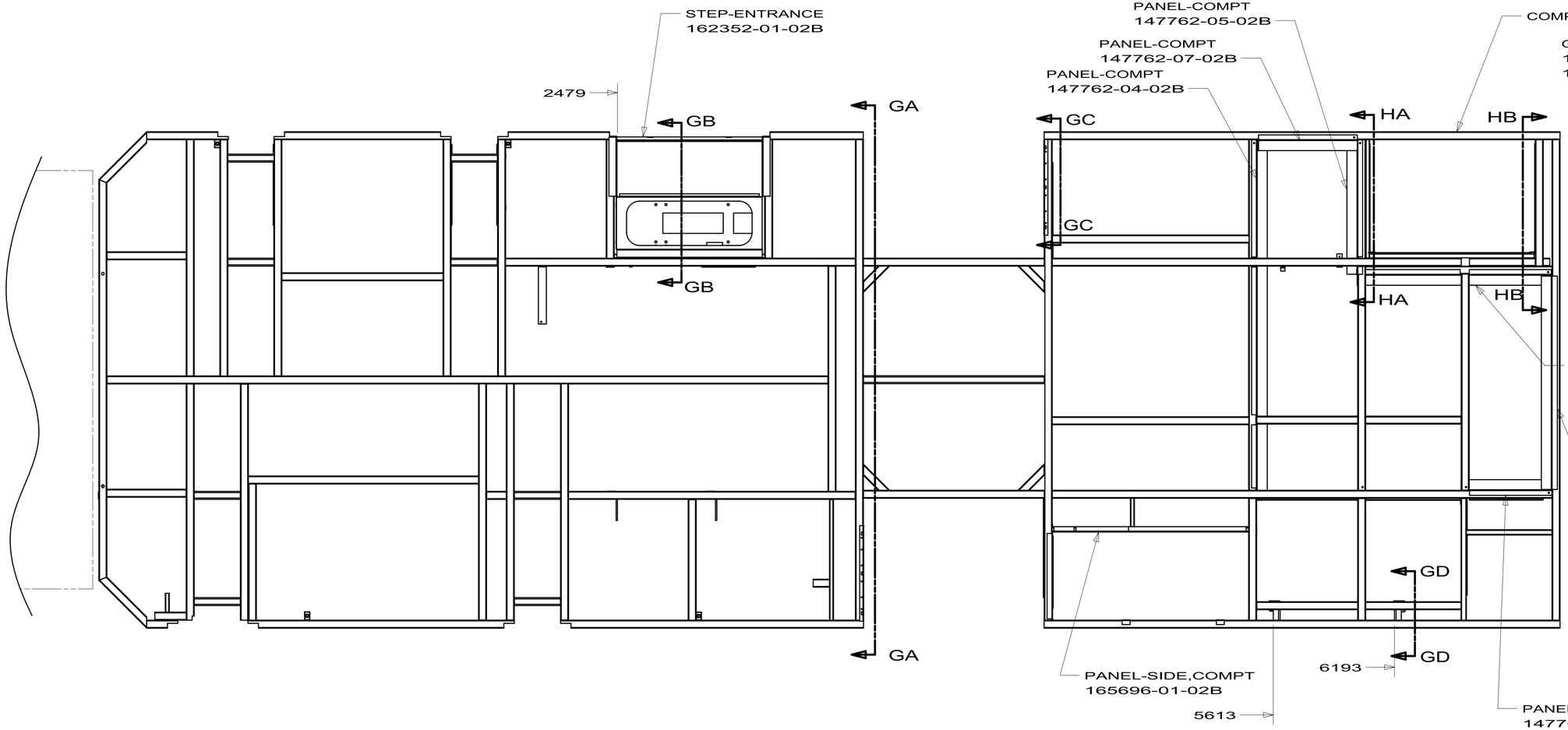

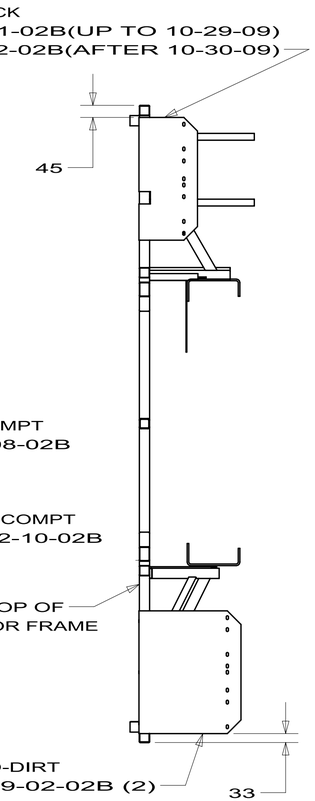

SECTION GA-GA

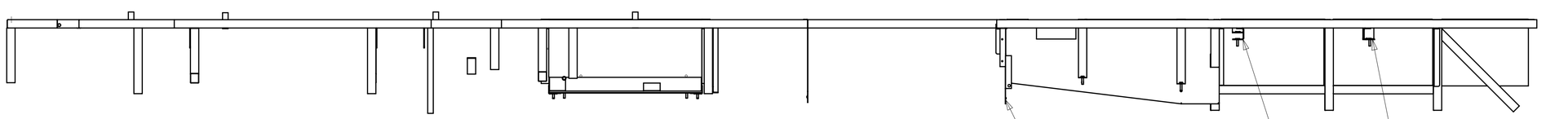

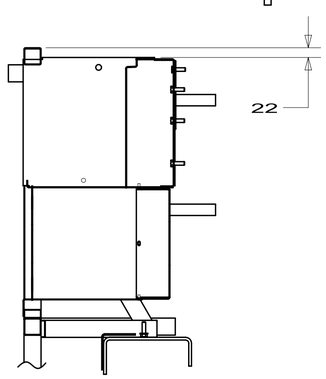

SECTION GB-GB

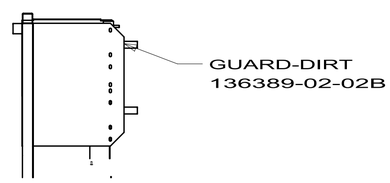

SECTION GC-GC

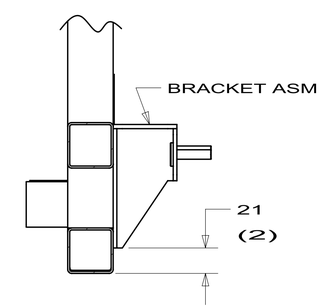

SECTION GD-GD

FIRST USED	10 730C
DO NOT SCALE DRAWING	
TITLE:	FRAME ASM-CHASSIS,FORD
SHEET 7	PART NO 172223 REV

4/15/2010

DWG NO 172223

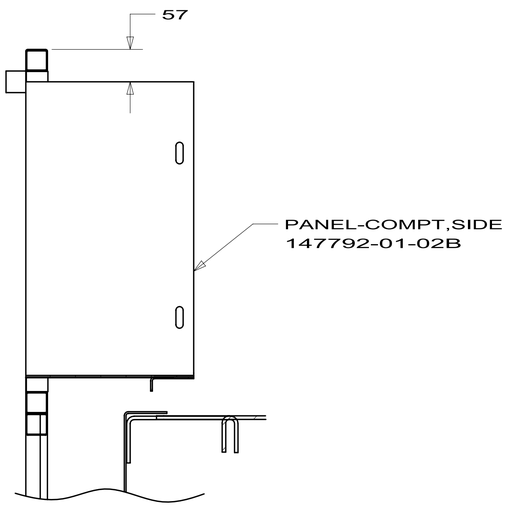

SECTION HA-HA

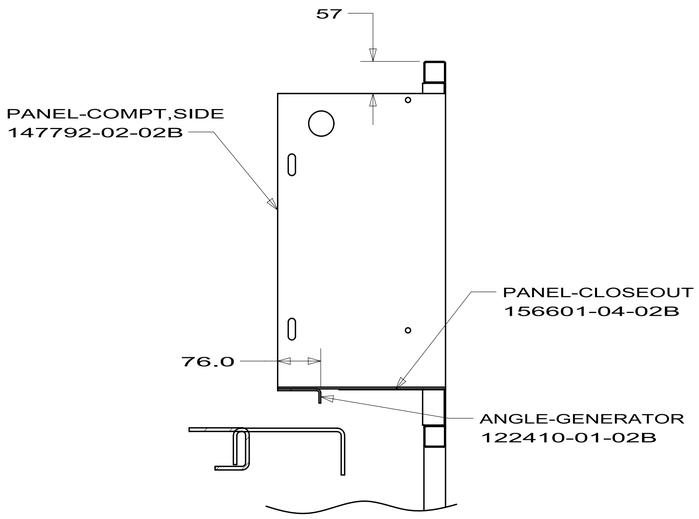

SECTION HB-HB

FIRST USED	10 730C
DO NOT SCALE DRAWING	
TITLE:	FRAME ASM-CHASSIS,FORD
SHEET 8	PART NO 172223 REV

4/15/2010

DWG NO 147872

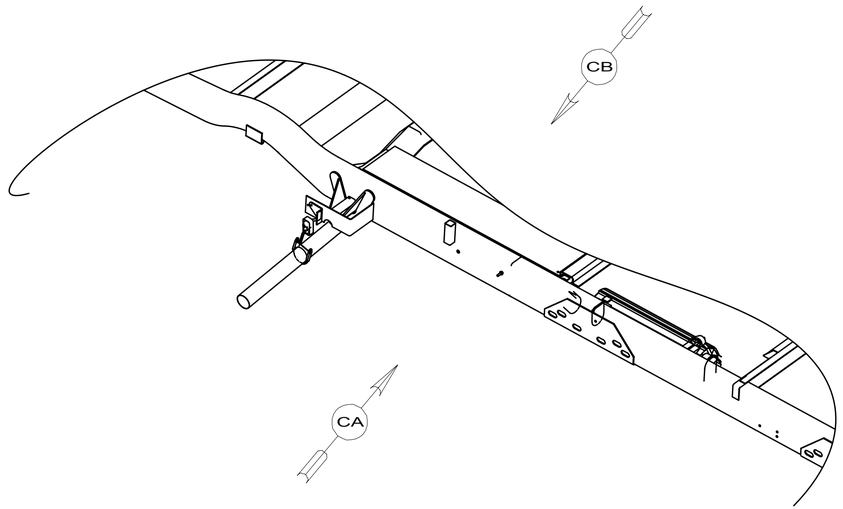

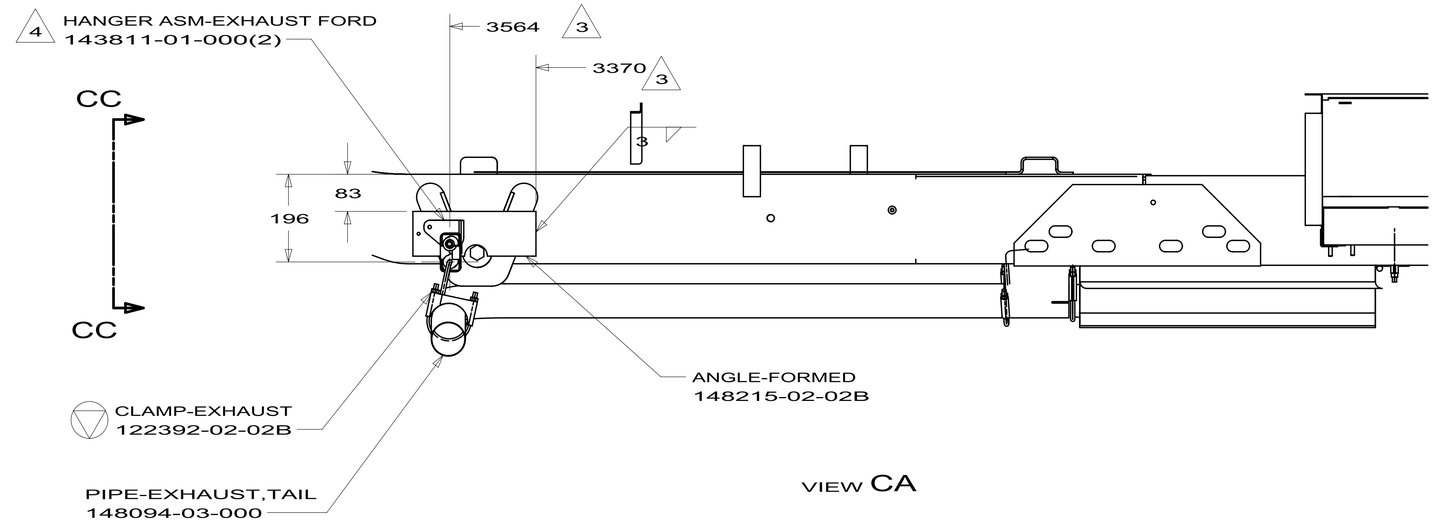

VIEW CA

730C
2008
FORD
CHASSIS
147872-03-000

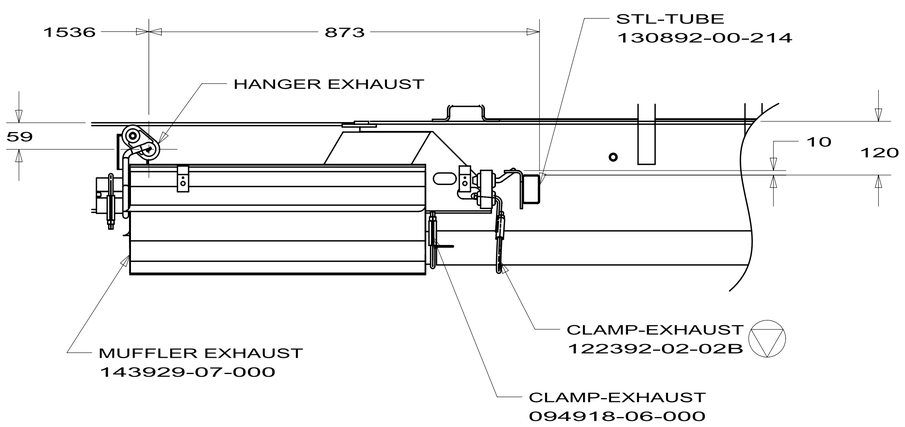

VIEW CB

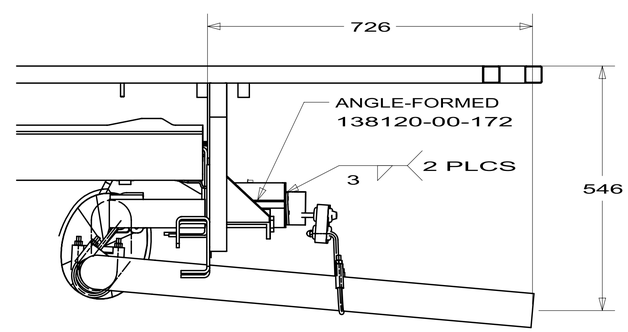

VIEW CC-CC

730C

FIRST USED	06 729H
DO NOT SCALE DRAWING	
TITLE:	EXHAUST SYSTEM INSTL
SHEET 1	PART NO 147872 REV

1/16/2010

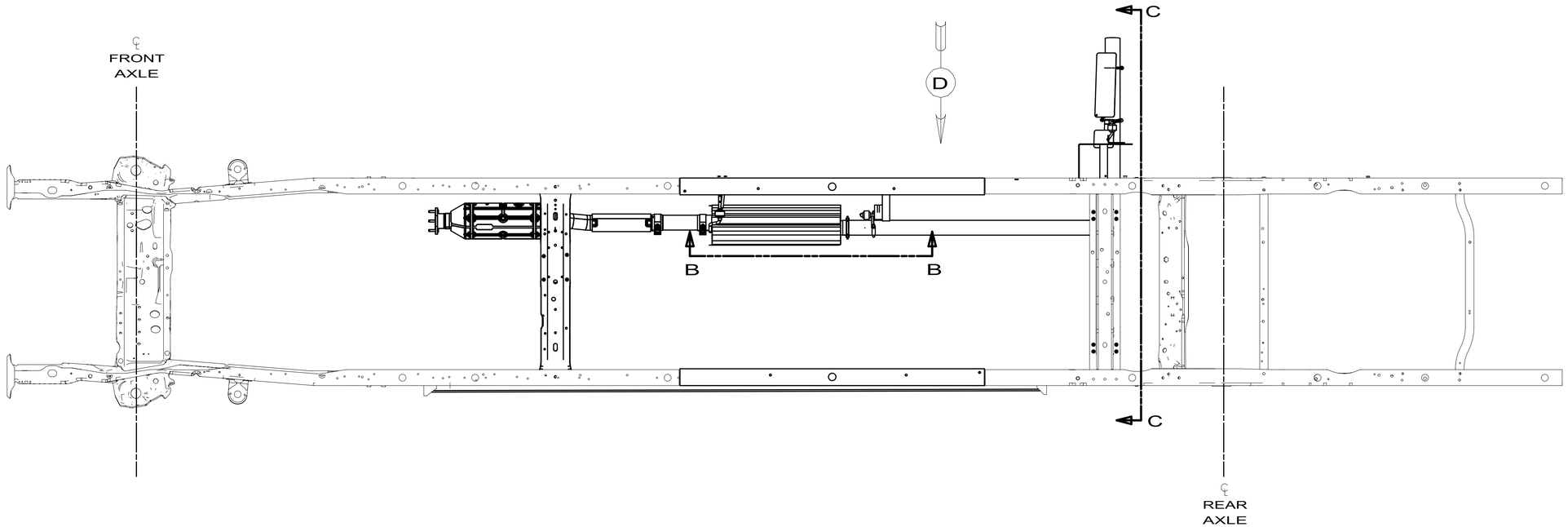

171834-07
728B

171834-11
730C

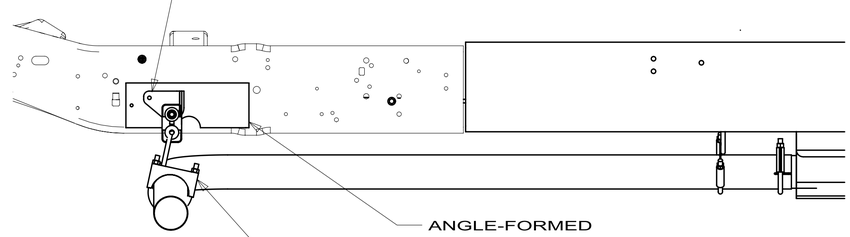

VIEW D

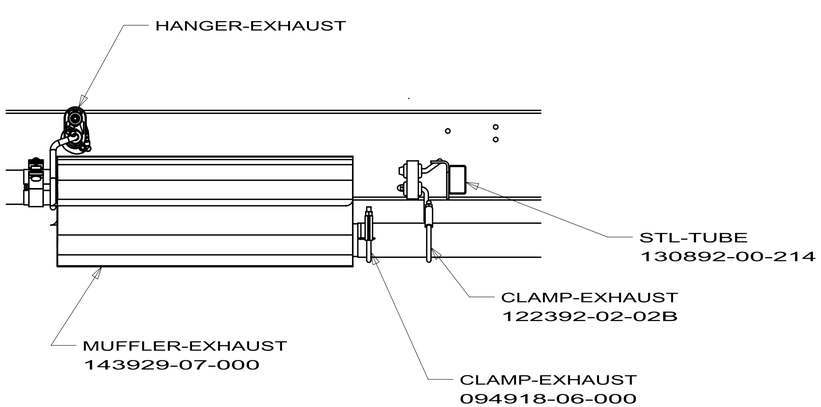

SECTION B-B

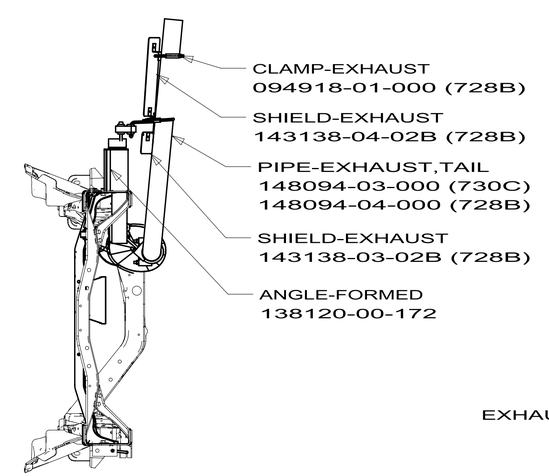

SECTION C-C
(728B,730C)

STRETCHED CHASSIS
EXHAUST IN FRONT OF REAR AXLE

09 FD E450

EXHAUST SYSTEM INSTL

DWG NO 156835

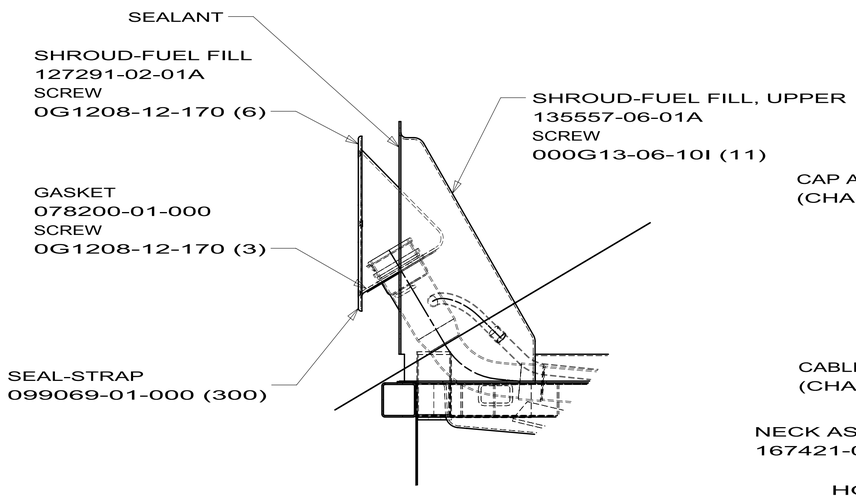

DETAIL C

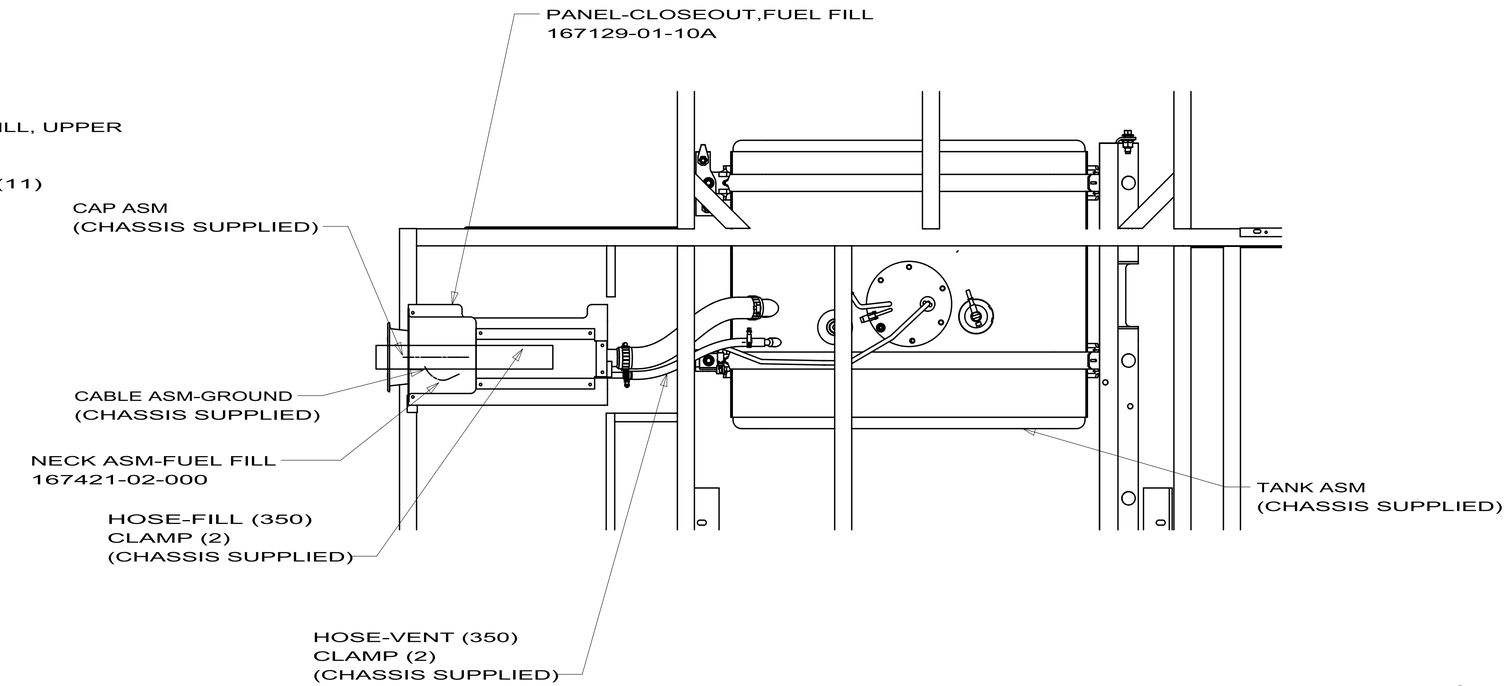

730C
156835-08

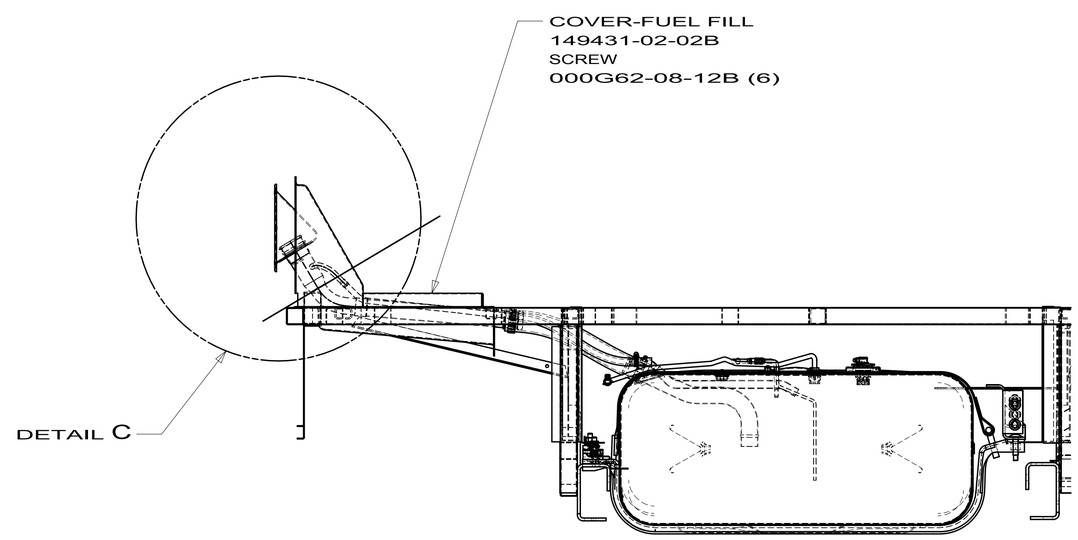

FIRST USED	09 730C
DO NOT SCALE DRAWING	
TITLE:	FUEL FILL INSTL
SHEET 5	PART NO 156835 REV

1/16/2010

RELEASE	REV A	DATE	DWG NO 147864
REV	ZONE	REVISION RECORD	DATE	DFTR-ORIG

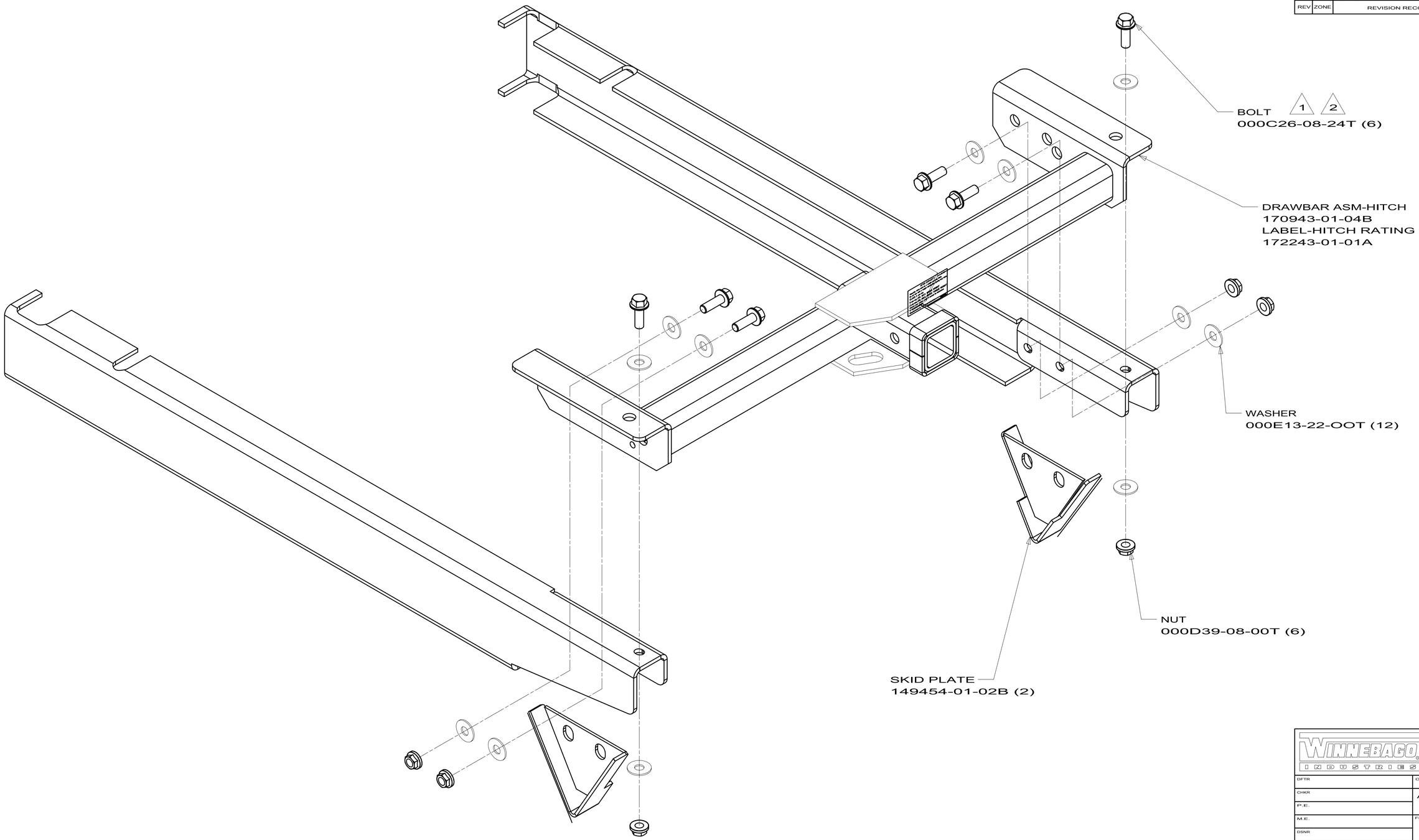

2. USE LOCTITE 62917-02-000 ON ALL THREADS WHEN INSTALLING BOLTS.

1. TORQUE BOLTS TO: 70-85 Nm (52-62 FT-LBS).

NOTES:

SEE CHART

FOR COLOR VARIATIONS OF THIS PART

COPYRIGHT 2010
WINNEBAGO
INDUSTRIES, INC.

DFTR	ORIG. DATE
CHKR	ALL DIMENSIONS ARE IN MILLIMETERS
P.E.	
M.E.	FIRST USED
DSNR	05 726A

UNSPECIFIED TOLERANCES ARE:

WHOLE DIM (X)	:	1
ONE-PLACE (X.X)	:	1.5
TWO-PLACE (X.XX)	:	0.50
ANGLE	:	1°

MATERIAL:

THIRD ANGLE PROJECTION

DO NOT SCALE DRAWING

REFER TO ES0018 FOR FASTENER TIGHTENING GUIDELINES

TITLE: HITCH INSTL-CLASS 3

SHEET 1 OF 2 | PART NO 147864 | REV

REF:

4/15/2010

DWG NO	UNIT/WHEELBASE	CHASSIS
173064-01	728B/200"	E450 FORD
173064-02	730C/220"	E450 FORD

RELEASE	REV	DATE	DWG NO
	A		173064

REV	ZONE	REVISION RECORD	DATE	DFTR-ORIG

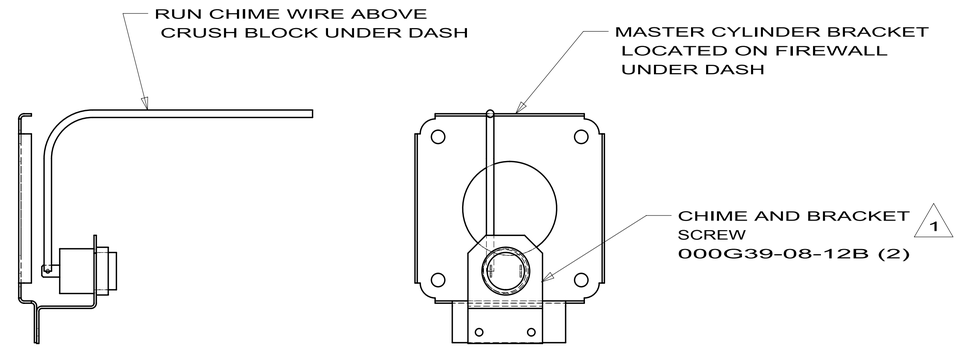

VIEW E-E 10

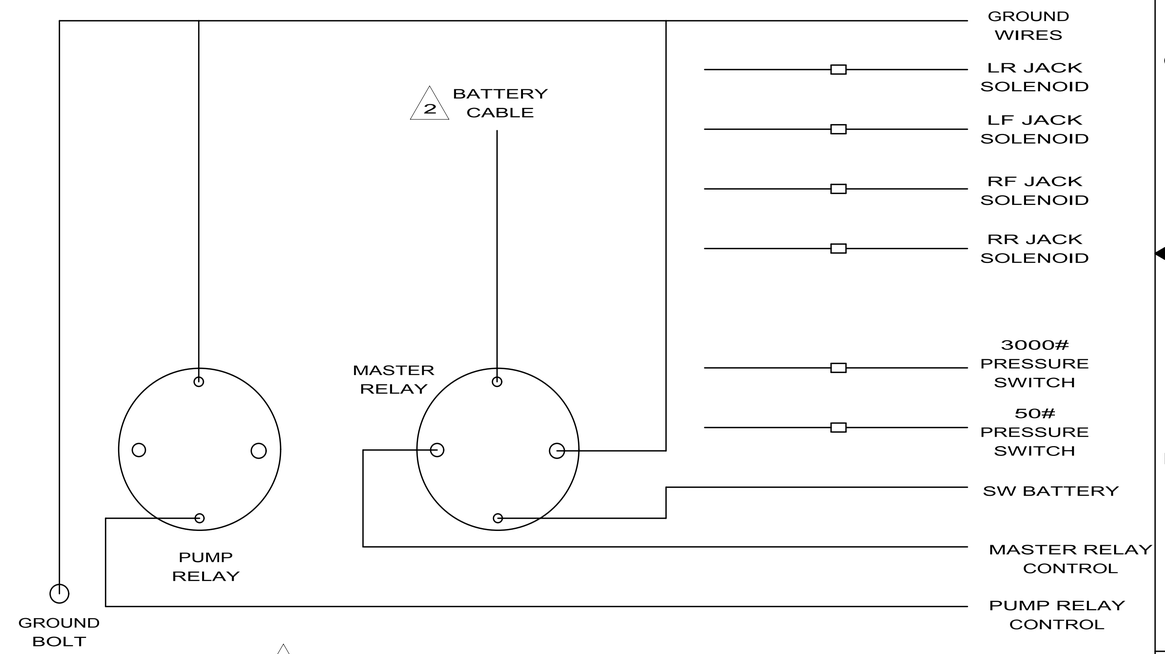

3 PUMP WIRING DIAGRAM
(AP36610)

17 WELD BOLT TO FRONT LEVELING JACKS. PAINT WELD AREA.

16 HOSE FITTINGS TO BE INSTALLED FINGER TIGHT PLUS TWO FLATS OF THE HEX FITTING. IF FITTING HAS BEEN REMOVED AND IS BEING INSTALLED A SECOND TIME, TIGHTEN FITTING FINGER TIGHT PLUS ONE FLAT.

15 THE LEVEL SENSOR IS LOCATED ON THE RIGHT SIDE OF CONTROL BOX. USING A HEX WRENCH AND A PHILLIPS SCREWDRIVER, ADJUST THE ANGLE OF THE SENSOR IN BOTH DIRECTIONS UNTIL THE FOUR YELLOW LEDS ARE OFF.

14 ALL JACK CYLINDERS MUST BE ALLOWED TO ROTATE INBOARD AND OUTBOARD FREELY WITHOUT HOSES AND WIRES RUBBING OR INTERFERING WITH MOTORHOME COMPONENTS. HOSES AND WIRES MUST NOT BE CLAMPED OT TIED ANY CLOSER THAN 300 mm FROM JACKS.

13 HOSE LENGTHS FOR JACKS MUST BE A MINIMUM OF 60" LONG. ROUTE EXTRA HOSE ON TOP OF JACK CROSSMEMEMBER. SECURE WITH WIRE TIES.

12 CLAMP OR WIRE TIE ALL HOSES AT 900 mm MAXIMUM INTERVALS AND WHERE NECESSARY TO PREVENT HOSES FROM CONTACTING MOVING PARTS OR HEAT PRODUCING ITEMS.

11 HOOK RETAINER OVER BOTTOM FLANGE OF CHASSIS RAIL (2 PER JACK).

10 SEE WIRING INSTL-CHASSIS FOR "JACK DOWN" LIGHT AND CHIME INSTALLATION.

9. TORQUE TO 31 Nm (23 FT LB).

8. TORQUE TO 17 Nm (13 FT LB).

7. TORQUE TO 47 Nm (35 FT LB).

6. HOSES CAN BE BENT TO A 50 mm MINIMUM RADIUS TO AVOID KINKS OR FLOW RESTRICTIONS.

5. TIE WIRES TO HOSE FITTINGS.

4. COVER ALL HOSES FULL LENGTH WITH CONDUIT 041953-09-000.

3. FOR WIRING SCHEMATICS OF LEVELING SYSTEM SEE DRAWING 158506-01-000.

2. SEE BATTERY INSTALLATION FOR ADDITIONAL INFORMATION.

1. PARTS INCLUDED WITH LEVELING KIT.

NOTES:

INDICATES CRITICAL SAFETY PROCEDURE TO BE FOLLOWED

COPYRIGHT 2010
WINNEBAGO
INDUSTRIES, INC.

DFTR	ORIG. DATE
CHKR	ALL DIMENSIONS ARE IN MILLIMETERS
P.E.	
M.E.	FIRST USED
DSNR	10 700-SERIES

UNSPECIFIED TOLERANCES ARE:
WHOLE DIM (X) : 3
ONE-PLACE (X.X) : 1.5
TWO-PLACE (X.XX) : 0.50
ANGLE : 1°

MATERIAL:

THIRD ANGLE PROJECTION

DO NOT SCALE DRAWING

TITLE: LEVELING SYSTEM INSTL-HWH

SHEET 1 OF 4 | PART NO 173064 | REV

REF:

1/16/2010

DWG NO 173064

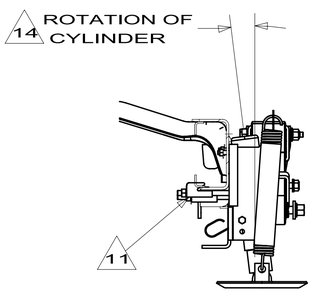

SECTION B-B

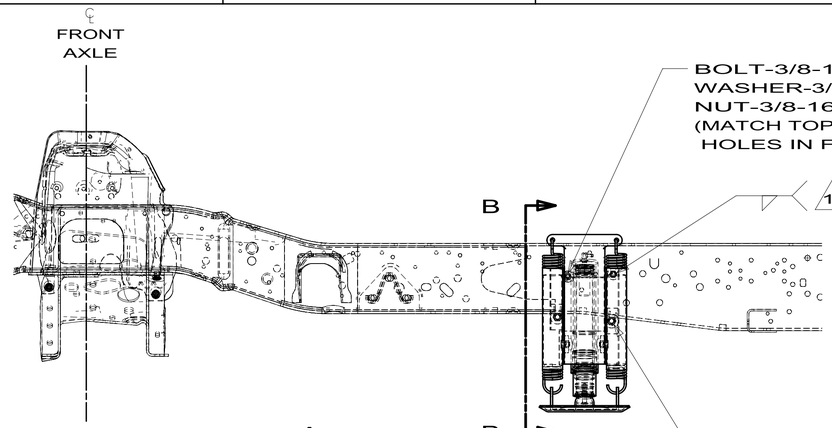

VIEW A
FRONT JACKS

BOLT-3/8-16 X 1.00 GR5 (2/JACK)
WASHER-3/8 (2/JACK)
NUT-3/8-16 (1/JACK)
(MATCH TOP HOLES WITH HOLES IN FRAME)

BOLT-7/16-14 X 4.50 GR5 (2/JACK)
WASHER-7/16 (2/JACK)
NUT-7/16-14 (2/JACK)
RETAINER (2/JACK)

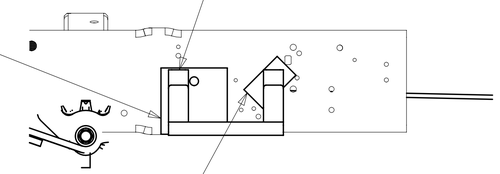

VIEW F
(PUMP NOT SHOWN)

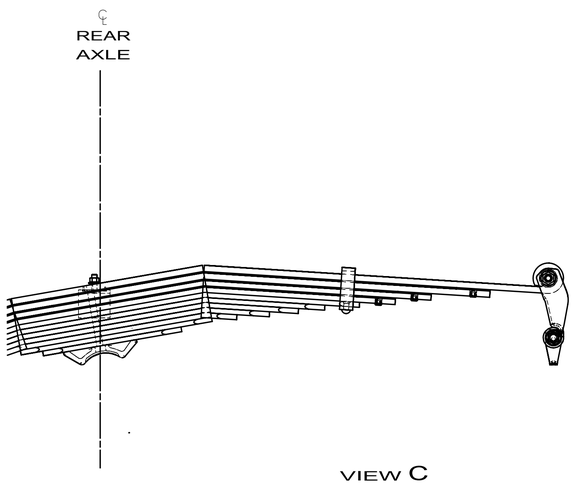

VIEW C
REAR JACKS

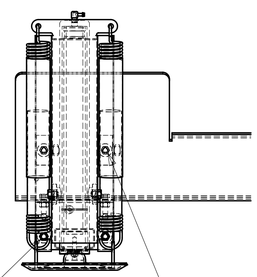

BOLT-3/8-16 X 1.25 GR5 (2/JACK)
WASHER-3/8 (2/JACK)
(BOLT CROSSTIE TO EXTENSION)

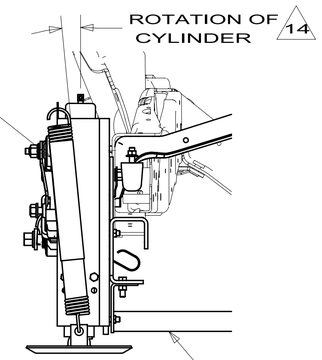

BOLT-3/8-16 X 1.25 GR5 (4/JACK)
NUT-3/8-16 (2/JACK)

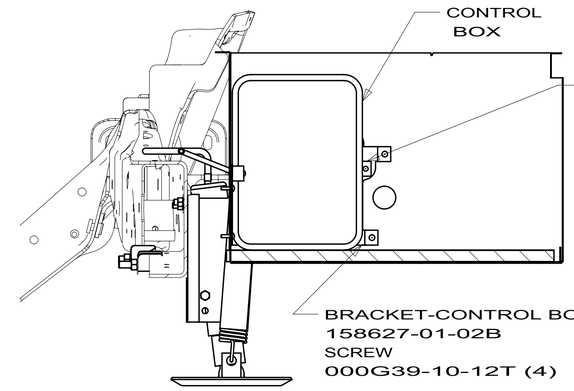

CLIP (2)
SCREW
000G39-08-20T (2)

BRACKET-CONTROL BOX,LEVELING
158627-01-02B
SCREW
000G39-10-12T (4)

SECTION G-G

PANEL-CONTROL BOX,LEVELING
166732-01-02B
SCREW
000G39-10-12T (6)
(ATTACH TO FLOOR TUBES)

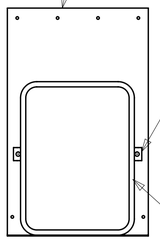

CLIP (2)
SCREW
000G39-08-20T (2)

CONTROL BOX

VIEW J

BRACKET ASM-MOUNTING,PUMP
162503-01-02B

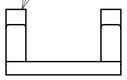

VIEW H
(PUMP NOT SHOWN)

FIRST USED	10 700-SERIES
	DO NOT SCALE DRAWING
TITLE:	LEVELING SYSTEM INSTL-HWH
SHEET 2	PART NO 173064 REV

1/16/2010

DWG NO 173064

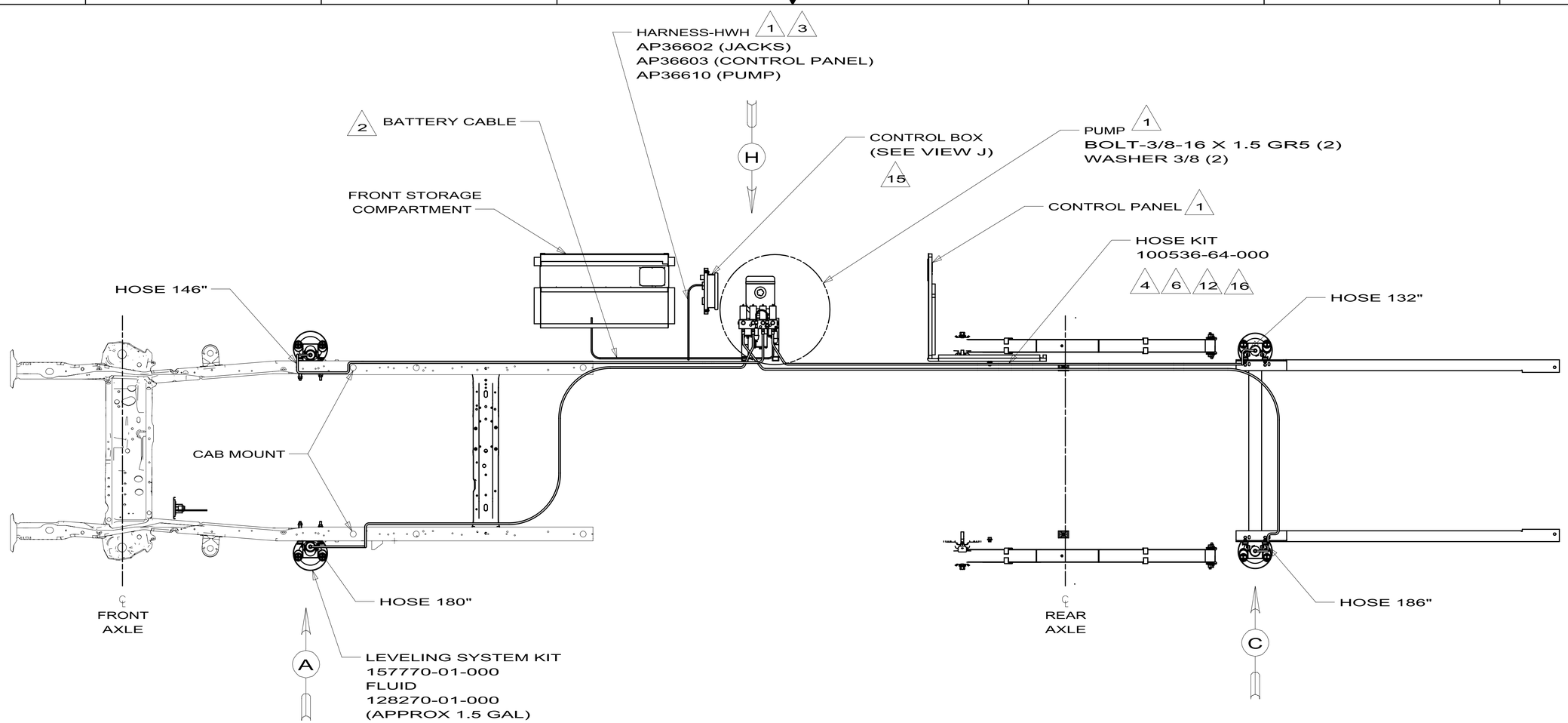

730C

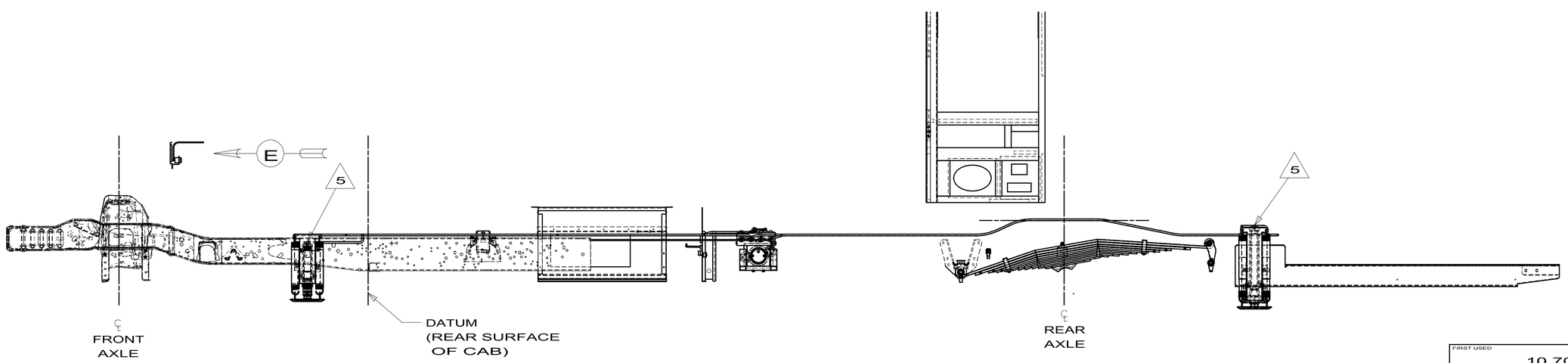

FIRST USED	10 700-SERIES
DO NOT SCALE DRAWING	
TITLE:	LEVELING SYSTEM INSTL-HWH
SHEET 4	PART NO 173064 REV

1/16/2010

157770-01-000

KEY	PART NUMBER	U/M	DESCRIPTION	VENDOR NO.
	100532-01-717	EA	MOTOR FOR PMP/RESRV RAP90014	RAP90311
	100532-03-716	EA	SOLENOID-CONTINUOUS DUTY	RAP7505
	100532-03-717	EA	VALVE-PRESS., RETURN SHUTTLE	RAP7964
	100532-03-726	EA	SWITCH - PRESSURE	RAP8003
	100532-09-705	EA	SWITCH-PRESS - 3000 LB.	RAP0993
	100532-09-710	EA	SOLENOID-INTERMITENT DUTY	RAP0533
	100532-12-707	EA	SPRING KIT (PAIR)	R3847
	100532-32-704	EA	CHIME - JACK WARNING	RAP90681/AP19765
	131306-11-704	EA	PRESSURE SWITCH - 50 PSI	RAP2082
	131306-12-702	EA	VALVE-PRESS SOLENOID (SMALL)	RAP90729/AP24604
	144226-01-700	EA	SWITCH - WARNING/MAGNETIC	RAP90968/AP26641
	144226-08-702	EA	SENSOR/BI-AXIS - PROGRAMABLE	RAP91172/AP28010
	157770-01-700	EA	CYLINDER W/O FOOT - 4K	RAP91855/AP36046
	157770-01-701	EA	CYLINDER W/O FOOT - 6K	RAP91856
	157770-01-702	EA	SPRING KIT - 4K JACK	R91916
	157770-01-703	EA	TOUCH PAD - 625 FORD C BODY	RAP91864/AP36468
	157770-01-704	EA	ENCLOSURE BOX W/SENSING UNIT	RAP91762/AP36595
	157770-01-705	EA	PUMP/MOTOR/TANK ASM	RAP91912/AP37416

157770-02-000

KEY	PART NUMBER	U/M	DESCRIPTION	VENDOR NO.
	157770-01-700	EA	CYLINDER W/O FOOT - 4K	RAP91855/AP36046
	157770-01-702	EA	SPRING KIT - 4K JACK	R91916
	157770-02-700	EA	FOOT - 4K JACK	RAP92048

157770-03-000

KEY	PART NUMBER	U/M	DESCRIPTION	VENDOR NO.
	157770-01-700	EA	CYLINDER W/O FOOT - 4K	RAP91855/AP36046

COPYRIGHT © 2009 WINNEBAGO INDUSTRIES INC.

Spare Wheel and Tire Matrix
Chassis Model Year 2008 - Current
March 17, 2009

Chassis		Wheel		Wheel Part Number	Wheel Rating	Weight (lbs.)	Tire	Maximum Tire Rating	Brand	Tire Part Number	Weight (lbs.)
Dodge	3500 Sprinter **500 Series**	Magnetto (Mercedes Benz) A 001 401 70 02 16 X 5.5, 6 bolt	CHASSIS SUPPLIED		Wheel not marked	27	LT215/85R16E	2680/2470 @ 80	Continental		27.1
Ford	E350/E450 Super Duty **200,300 & 700 Series**	Arvin Meritor 16 X 6, 8 bolt @ 6.5 8C2Z-1015-G	CHASSIS SUPPLIED		Wheel not marked	– – –	LT225/75R16E	2680/2470 @ 80	Michelin LTX M/S	**083425-14-000**	71
Ford	F53 16, 18 (2011 chassis) GVWR **E26P**	Hayes/Lemmerz (Boriem) 19.5 X 6.0 10 bolt 8U94-1015-BA	CHASSIS SUPPLIED		3750 @ 110	51.5	225/70R19.5G	3970/3750 @ 110	Continental HSR		60.8
Ford	F53 18 (2009 chassis), 20.5, & 22K GVWR **E30W,E32K D31E,D33C, D35J W/19.5 TIRE ONLY**	Accuride 29875 19.5 X 6.75, 10 bolt 5U94-1015-AA	CHASSIS SUPPLIED		4000 @ 115	59	245/70R19.5F	4080/3970 @ 85	Goodyear G670		66
Workhorse	W16/W18 **E30W**	Maxion W0007492 19.5 X 6, 10 bolt	Steel	**156482-02-000** Black	3750 @ 110	58.5	225/70R19.5F	3640/3415 @ 95	Michelin XRV	**091673-07-000**	52
Workhorse	W20-22 7,500 GAWR-F **D33C, E32K**	Maxion W0002404 19.5 X 6.75, 8 bolt	Steel	**118814-05-000**	5000 @ 115	61	245/70R19.5F	F53 16, 18 (2011 chassis) GVWR **E26P**	Goodyear G670RV	**102340-08-000**	70
Workhorse	W21/W22 8,000/8,500 GAWR-F **D31E**	Maxion W0002404 19.5 X 6.75, 8 bolt	Steel	**118814-05-000**	5000 @ 115	61	245/70R19.5G	4540/4410 @ 110	Goodyear G670RV	**102340-09-000**	70

COPYRIGHT © 2010 WINNEBAGO INDUSTRIES INC.

DWG NO 156837

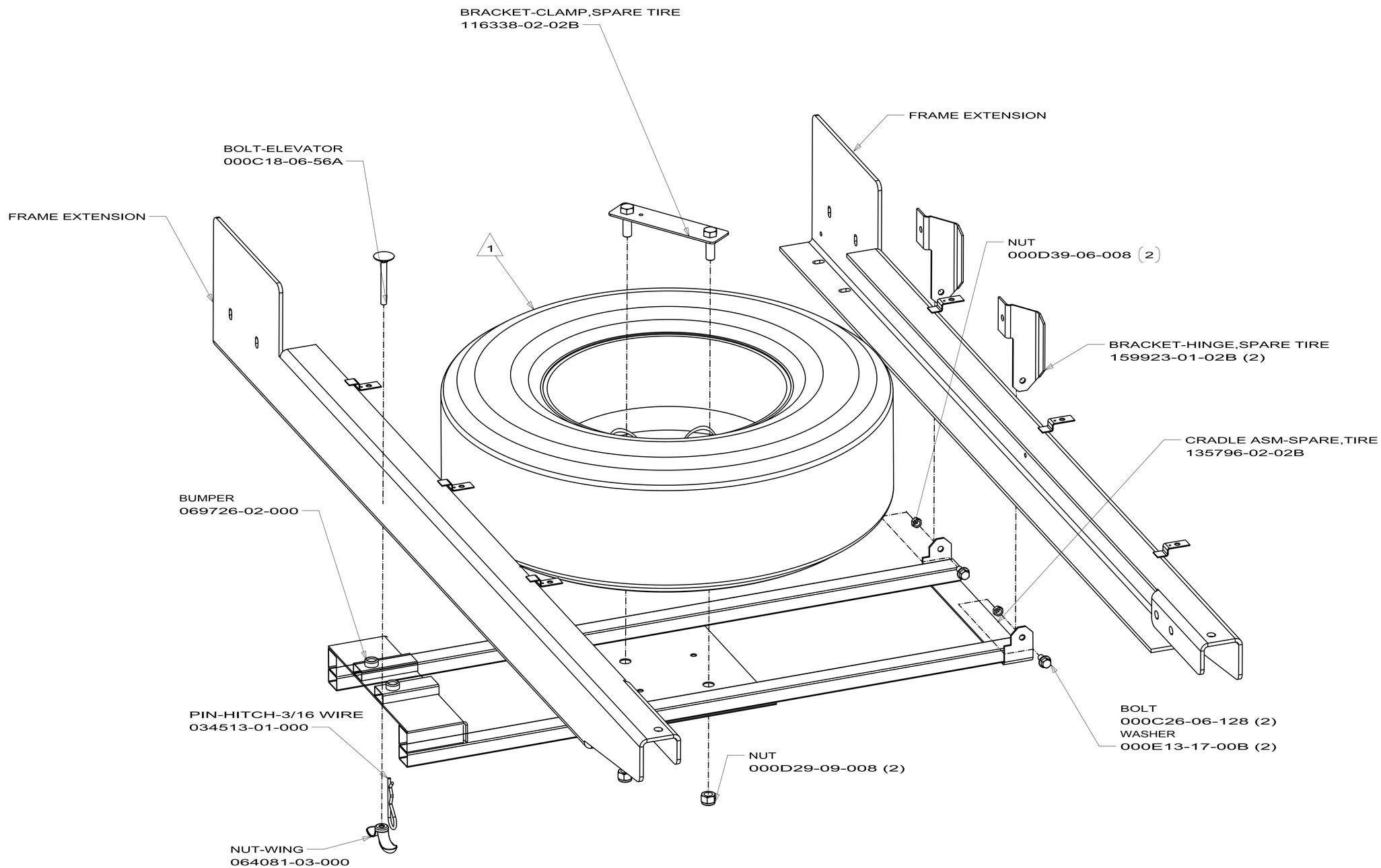

730C
156837-20-XXX

TAB-20,PG-21

1. SEE SHEET 1 MATRIX.

NOTES:

FIRST USED	09 730C
	DO NOT SCALE DRAWING
TITLE:	SPARE TIRE COMPL
SHEET 12	PART NO 156837 REV

1/16/2010

DWG NO 159483

2010 AND UP WHEEL TRIM MATRIX

	TIRE AND WHEELS		WHEELCOVERS		WHEEL LINERS				CHASSIS-SUPPLIED PARTS IF ORDERED W/ALUMINUM WHEEL				
	TIRE/WHEEL ∅ & WIDTH	WHEEL P/N & MFGR	WHEEL COVERS	VALVE EXTENSION	WHEEL LINERS	VALVE EXTENSION	STABILIZER	TORQ. WHEEL LINER	ALUMINUM WHEEL	HUB COVER	VALVE EXTENSION	STABILIZER	NUT COVER
CHEVY C BODY (14050) NOT USED	225/75R 16"X6.5"	ACCURIDE 29361 AFTERMARKET ACCURIDE 29588	109443-05	REAR:(4)77030-01 REMOVE COVER FOR ACCESS FRONT: (2)77030-01	110435-23-000	REAR INNER (2)95012-09 △6 REAR OUTER (2)77030-10 FRONT (2)77030-10	(2)95012-07	PUSH ON (NA)	156797 -01 (2) FRONT -02 (2) REAR	156797 -03 (2) FRONT -04 (2) REAR	REAR INNER (2)77030-01	-	REPLACE NUTS W/ (32) 156797-06 NUT COVERS (32) 149749-05
DODGE SPRINTER 2500 BVAN 100 SERIES	245/75R 16"X6.5" (1KD)	ALUM DODGE 68004980AA STL(SPARE) DODGE 1J97SZ0AA	N/A	N/A	N/A	N/A	N/A	N/A	DODGE 68004980AA	DODGE 51045708AA (CENTER CAP)	N/A	N/A	BOLT/DODGE 68013444AA
SPRINTER 6 BOLT 16" (DUAL) 50O/H SERIES	215/85R 16"X5.5" (1KB) (1KM)	MAGNETTO MERCEDES A 001 401 71 02	N/A	N/A	154970-02	CHASSIS SUPPLIED REAR	-	PUSH ON (NA)	168919 -01 SET FRONT -02 SET REAR	168919 -03 SET FRONT -04 SET REAR	---	---	PART OF HUB COVER SET(S)
FORD A BODY F53 10 BOLT 19.5" E/D SERIES	245/70R 19.5"X6.75" (16K) (16H) (2009)	ACCURIDE 29875	N/A	N/A	154672-01	REAR INNER (2)95012-09 △6 REAR OUTER (2)77030-10 FRONT CAP ONLY	(2)95012-07	41-47 NM 30-35 LB/FT TORQUE	N/A	-	-	-	
FORD A BODY F53 D/J SERIES	235/80R 22.5"X7.5" (16L) (16Z)	ALCOA DURA-BRITE 873400	N/A	-	-	-	-	-	- △1	KIT WITH ATTACHMENT 150723-01 △5	REAR INNER (2)77030-10 △5	-	-
FREIGHT LINER (REAR ENGINE) P/R SERIES (1AF) (1LE)	255/80R 22.5"X8.25" 295/80R 22.5"X8.25" (1LT) (1LU)	ACCURIDE 50487	N/A	N/A	-	REAR INNER (2)77030-11 REAR OUTER (2)77030-10 FRONT (2)77030-01	(2)77030-11	41-47 NM 30-35 LB/FT TORQUE	(2)133429-03 (2)133429-04 ACCURIDE 29697 IFS ONLY FRONT ACCURIDE 29560	FRONT FCCC (2)A22-53422-000 129058-15(2) 129058-16/19 129058-17/20 OR 129058-21/22 △2	REAR △1 INSIDE 129058-06 (2)	129058-18 (2) △1	(40)129058-10
FORD C BODY E350/450 200/300/700 SERIES	225/75R 16"X6" (16C) (16Y)	(ARVIN MERRITOR) FORD 8C24-1015-H	109443 -05-000	REAR: FORD 1/2" FRONT: FORD 1/2" (LIKE 077030-10) REMOVE COVER FOR REAR ACCESS	110435-23-000	REAR INNER (2)95012-05 △6 REAR OUTER AND FRONT CHASSIS SUPPLIED 1/2"(77030-10)	(2)95012-07	PUSH ON (NA)	(2)149749-01 (2)149749-02 (UP TO 06-22-09) (2)149749-07 (2)149749-08 (AFTER 06-23-09)	156797 -03(2)FRONT -04(2)REAR	REAR INNER (2)77030-01	---	REPLACE NUTS W/ (32) 149749-06 NUT COVERS (32) 149749-05
FORD A BODY F53 16K 2009 E26P 18K (2011) E/D SERIES	225/70R 19.5"X6.0" (16N) (16H) (2011)	(HAYES LAMMERZ) FORD 8U94-1015-BA	N/A	N/A	154672-02	REAR INNER (2)95012-09 △6 REAR OUTER (2)77030-10 FRONT CAP ONLY	(2)95012-07	41-47NM 30-35 LB/FT	N/A	---	---	---	---
FRONT ENGINE FREIGHT LINER J SERIES	225/80R 22.5"X8.25" (1L1) (1LL)	ACCURIDE 50487	N/A	N/A	145580-05	REAR INNER (2)77030-11 REAR OUTER (2)77030-10 FRONT (2) 77030-01	(2)77030-11	41-47NM 30-35 LB/FT TORQUE	(2)133429-03 (2)133429-04 ACCURIDE 29697	FRONT FCCC(2) A22-53422-000 129058-15(2) 129058-17/20	REAR △1 INSIDE 129058-06 (2)	129058-18 (2) △1	(40)129058-10

5 △ WINNEBAGO INSTALLED.

4 △ FREIGHTLINER LOGO NOT FOR WORKHORSE APPLICATION.

3 △ NO WINNEBAGO 8 BOLT HUB COVER WITHOUT PORT.

2 △ BRACKET-17/20 FOR 145 AXLE, BRACKET-21/22 FOR 144 AXLE.

1 △ CHASSIS SUPPLIED

SOME PARTS UNIQUE TO CHASSIS MFGR., NO WINNEBAGO P/N

6 △ USE NUT SUPPLIED ON EXTENSION BETWEEN STABILIZER AND CAP.

CONTINUED ON NEXT PAGE

FIRST USED	07 MOTORHOMES
	DO NOT SCALE DRAWING
TITLE:	WHEEL INSTL
SHEET 1	PART NO 159483 REV

3/3/2010

DWG NO 159483

*FOR WINNEBAGO MODEL YEAR 2007, WINNEBAGO WILL SUPPLY LUG WRENCHES WHICH ARE SUPPLIED TO WINNEBAGO WITH THE CHASSIS. (CURRENTLY, FORD E350/E450 CUTAWAY, DODGE SPRINTER, AND FORD F53 19.5" RAIL) IN ADDITION, C-BODY CUTAWAY CHASSIS WITH ALUMINUM WHEEL OPTION, FORD CHASSIS SUPPLIED LUG WRENCH WHICH NO LONGER FITS ALUMINUM WHEEL FASTENERS WILL BE STORED UNDER PART NUMBER 112358-02-000. WINNEBAGO WILL PROVIDE LUG WRENCH AND LEVERAGE BAR TO FIT ALUMINUM WHEEL HARDWARE. WINNEBAGO WILL PROVIDE 112358-02-000 WITH STANDARD CHEVY STEEL WHEEL CHASSIS.

OTHER APPLICATIONS LISTED FOR WRENCH FIT REFERENCE

2007 AND UP

LUG WRENCH APPLICATION MATRIX

	CHASSIS	LUG WRENCH	LEVERAGE BAR	TORQUE FT/LBS
* NOT USED	CHEVY CUTAWAY G3500 8 BOLT GMT610 8 BOLT	112358-02	---	110-140
* NOT USED	CHEVY CUTAWAY ALUMINUM WHEELS G3500/GMT610 8 BOLT	80208-06	80208-02	140
* 100/500/H SERIES 1KB 1KD 1KM	DODGE SPRINTER 16" 6-BOLT	CHASSIS SUPPLIED (FLOOR COMPT. @ PASS. FEET)	CHASSIS SUPPLIED	140 (130-150)
* 200/300/700 SERIES 16C 16Y	FORD CUTAWAY E350SD/E450SD 8 BOLT	CHASSIS SUPPLIED 112358-02	---	140
* 200/300/700 SERIES 16C 16Y	FORD CUTAWAY ALUMINUM WHEELS E350SD/E450SD 8 BOLT	80208-06	80208-02	140
* E/D SERIES 16H 16K	FORD RAIL F53 10 BOLT 19.5"	CHASSIS SUPPLIED 112358-01	---	140
D/J SERIES 16L 16Z	FORD RAIL F53 8 BOLT 22.5" ALUMINUM	80208-04	80208-05	450-500
	FREIGHTLINER 10 BOLT NOT USED	80208-04	80208-05	450-500
E26P/E30W 1PJ 1PL	WORKHORSE W16/18 10 BOLT 19.5"	80208-06	80208-02	150 (145-155)
E/D/J SERIES 1PE 1PR 1PS 1PU 1PV	WORKHORSE W20-25 SERIES AND UFO 8 BOLT	80208-04	80208-05	450-500

FIRST USED: 07 MOTORHOMES

DO NOT SCALE DRAWING

TITLE: WHEEL INSTL

SHEET 3 | PART NO. 159483 | REV

2/17/2010

110435-23-000

KEY	PART NUMBER	U/M	DESCRIPTION	VENDOR NO.
	110435-01-711	EA	DECAL-CENTER CAP- 2" - QTY 2	DIAMOND/2 PER BAG
	110435-23-700	EA	COVER/WHEEL - FRONT - 1 ONLY	FL60-59-FWC
	110435-23-701	EA	COVER/WHEEL - REAR - 1 ONLY	RWCFL60-59

COPYRIGHT © 2009 WINNEBAGO INDUSTRIES INC.