DWG NO	SHT
WINDOWS	1
DOORS	2
EXTERIOR DOORS & COMPTS	3
INTERIOR CAB	4
INTERIOR COACH	5
EXTERIOR	6
MISC	7
WATER CENTER	8

RELEASE	REV A	DATE	DWG NO 170138
REV	ZONE	REVISION RECORD	DATE	DFTR-ORIG

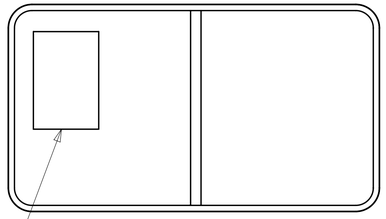

FRONT

WINDOW BEHIND DRIVER SEAT

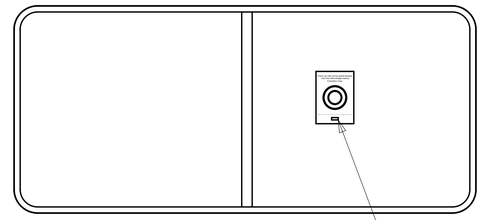

LARGEST WINDOW ON PASSENGER SIDE

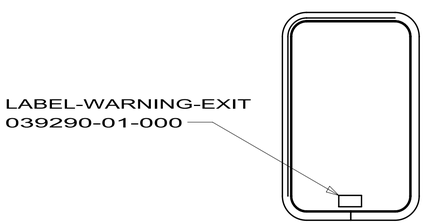

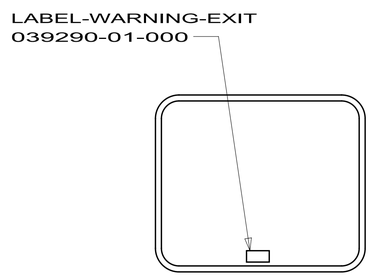

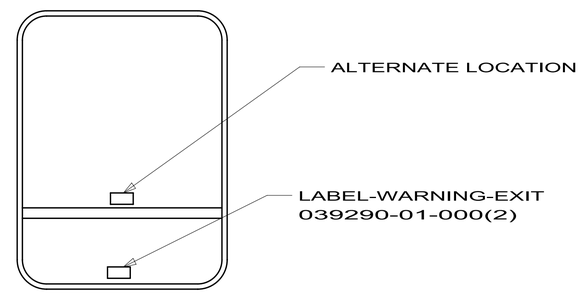

EXIT WINDOWS

41H RESTEASY - ULTRA LEATHER

1B1 CODES/STANDARDS/USA

265 CODES/STANDARDS-CSA/CMVSS

27E CODES/STANDARDS/CMVSS

15T AIR SPRINGS REAR

70C RADIO-SATELLITE

6. FOR SLIDEOUT CONTROL SWITCH LABELS SEE WIRING INSTL-12V.

5 ON METAL SIDE OF STEP COVER.

4 FOR USE ON WASHINGTON ONLY.

3. WINDOWS ARE SHOWN FROM INTERIOR SIDE OF COACH.

2 USE FOR CALIFORNIA ONLY.

1 USE FOR STATES: OREGON, NEBRASKA, AND WASHINGTON ONLY.

NOTES:

COPYRIGHT 2009
WINNEBAGO
INDUSTRIES, INC.

DFTR	ORIG. DATE
CHKR	ALL DIMENSIONS ARE IN MILLIMETERS
P.E.	
M.E.	FIRST USED
DSNR	10 700-SERIES

UNSPECIFIED TOLERANCES ARE:
WHOLE DIM (X) : 3
ONE-PLACE (X.X) : 1.5
TWO-PLACE (X.XX) : 0.50
ANGLE : 1°

MATERIAL:

THIRD ANGLE PROJECTION

DO NOT SCALE DRAWING

TITLE:
LABEL LOCATION INSTL

SHEET 1 OF 8 | PART NO 170138 | REV

REF:

10/24/2009

DWG NO 170138

LABEL-REFRIG. COMBUSTION AIR
070905-02-000

INSIDE VIEW OF REFRIGERATOR VENT
(NORCOLD ONLY)

1B1 LABEL-WARNING,REFUELING
124519-01-02A
27E 265 124519-02-02A
(LOCATE ON SIDEWALL ABOVE SHROUD

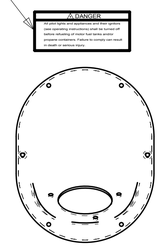

FUEL FILL
(OUTSIDE)

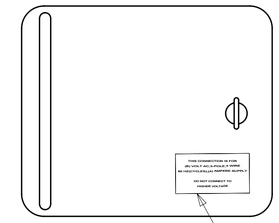

LABEL-ELEC
125306-04-01A

LABEL-VIN
109096-01-000

LABEL-MERCURY
135869-01-01A

SECTION B-B

TAG-RVIA APPROVED
006019-01-000 (US)

1 STATE INSIGNIA

265 CSA,CRVA
160699-01-CHT

LABEL-AWNING INSTL
099509-01-000

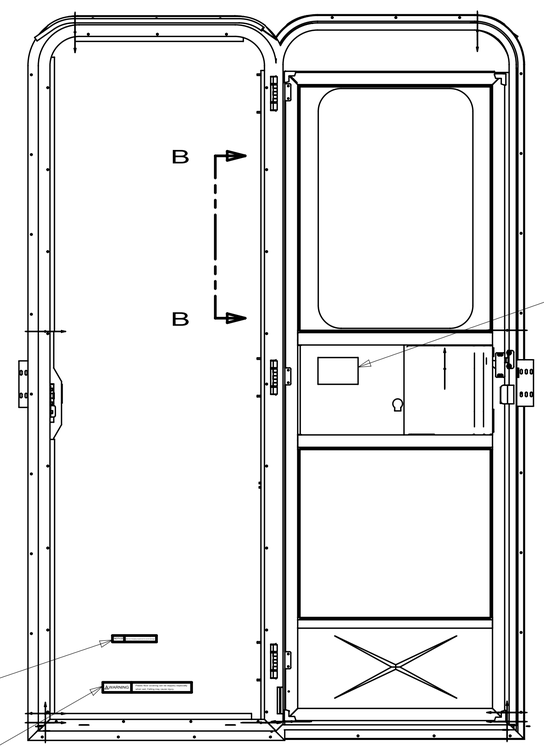

LABEL-WARNING
ELECTRIC STEP
(VENDOR SUPPLIED)

5 LABEL-CAUTION, BATTERY
065748-01-000

LABEL-WARNING,FLOOR COVERING
110273-01-000

LABEL-VEHICLE CERTIFICATION
087237-02-000 (US)
087237-05-00 (CAN)

LABEL-OCCUPANT AND CCC
168454-01-01A

LABEL-OCCUPANT AND CCC
168454-01-01A

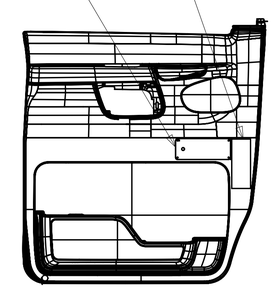

DRIVER DOOR

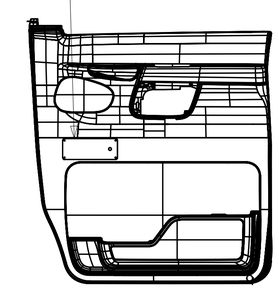

PASSENGER DOOR

FIRST USED	10 700-SERIES
	DO NOT SCALE DRAWING
TITLE:	LABEL LOCATION INSTL
SHEET 2	PART NO 170138 REV

10/24/2009

DWG NO 170138

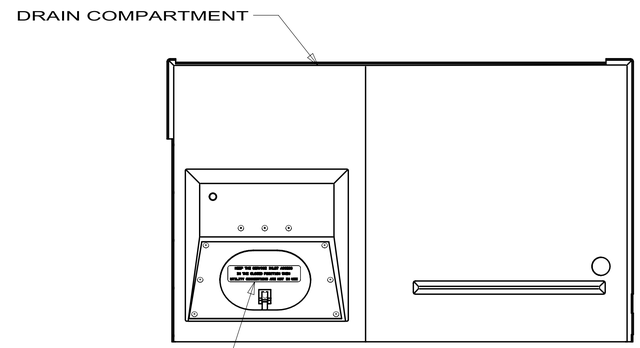

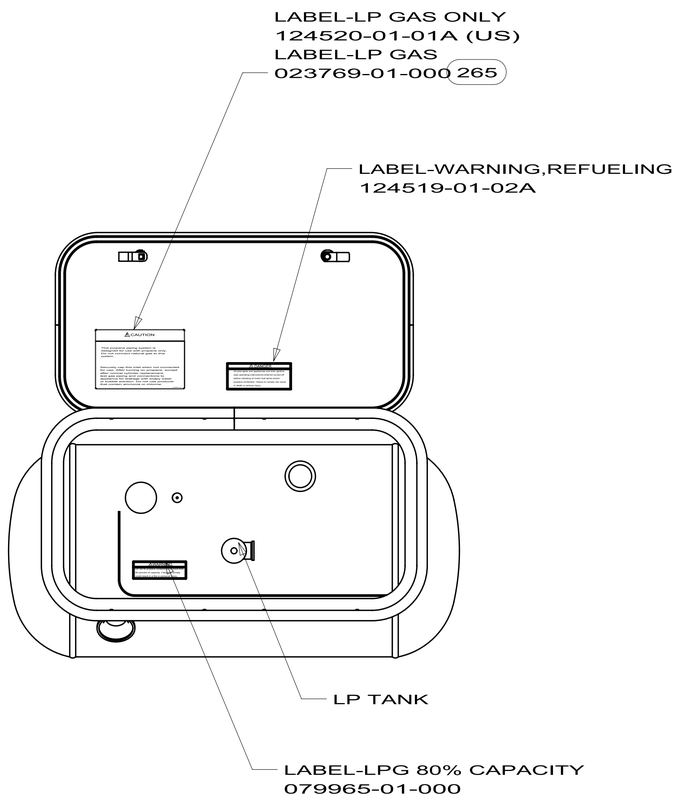

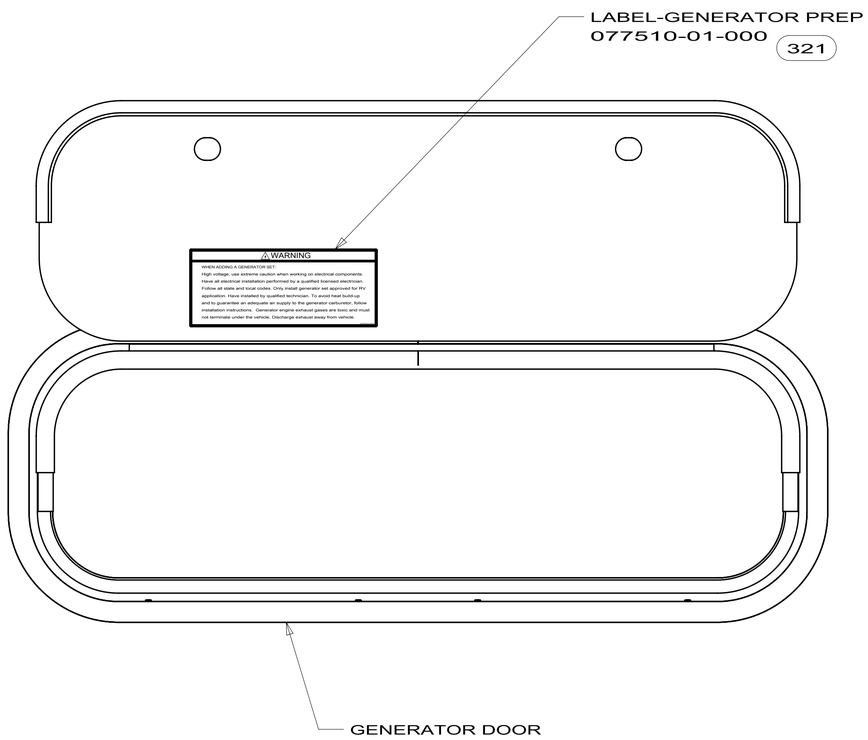

321 GENERATOR PREP

FIRST USED	10 700-SERIES
DO NOT SCALE DRAWING	
TITLE:	LABEL LOCATION INSTL
SHEET 3	PART NO 170138 REV

10/24/2009

DWG NO 170138

LABEL-WEIGHT SPEC
117396-03-000 (CAN) (3) 265 27E
117396-04-000 (CAN) (3) 265 27E

LABEL-CERTIFICATION
087237-02-000 (US)
27E 265 087237-05-000 (CAN)

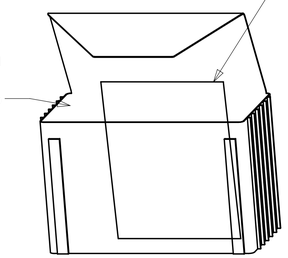

ONE WEIGHT SPEC SHEET TO GO IN OWNERS BAG.
ONE WEIGHT SPEC SHEET TO BE AFFIXED TO THE INSIDE OF THE WARDROBE OR SIMILAR DOOR.
ONE WEIGHT SHEET AND 168454-01-CHT TO BE FILED WITH TRAVELER.

LABEL-AIR BAG
126611-01-000
OR CHASSIS SUPPLIED

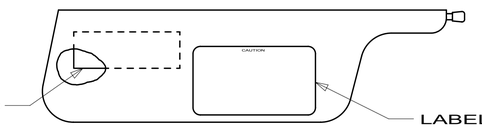

LABEL-CHECKLIST
056259-01-000

LABELS SHALL BE LOCATED ON OPPOSITE SIDE OF VISOR THAT THE AIR BAG LABEL IS INSTALLED ON.

LABEL-WARNING,REST EASY SOFA
137260-01-01A 41H

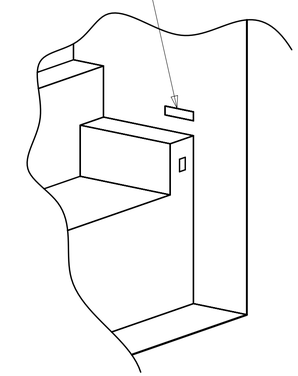

TYPICAL SEAT AND BELT CONFIGURATIONS

INSTRUMENT CLUSTER REF

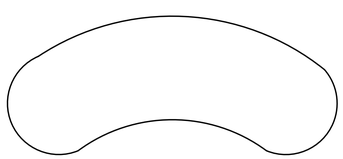

27E 265
LABEL-ODOMETER READ IN MILES
155692-01-02A (2008 CHASSIS)
NO LABEL (2009 CHASSIS)

(FORD SERVICE TOOL USED TO ACTIVATE DAYTIME RUNNING LIGHTS AND CHANGE ODOMETER TO METERIC)

LABEL-NO OCCUPANCY
134538-01-01A (US)
134538-02-01A (CAN)

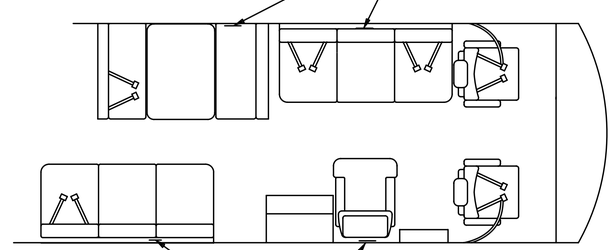

LABEL-NO OCCUPANCY
134538-01-01A (US)
134538-02-01A (CAN)

ATTACH LABEL ON OR NEXT TO:
+ANY SINGLE CHAIR WITHOUT BELTS.
+ANY DINETTE SEAT WITHOUT BELTS.
+ANY COUCH WITHOUT BELTS OR ANY SEATING POSITION ON THAT COUCH.
DO NOT ATTACH LABEL IFI:
+DINETTE SEAT HAS AT LEAST ONE SET OF BELTS INSTALLED.

41R 41Q
LABEL-AIRBED INSTRUCTIONS
173413-01-01A

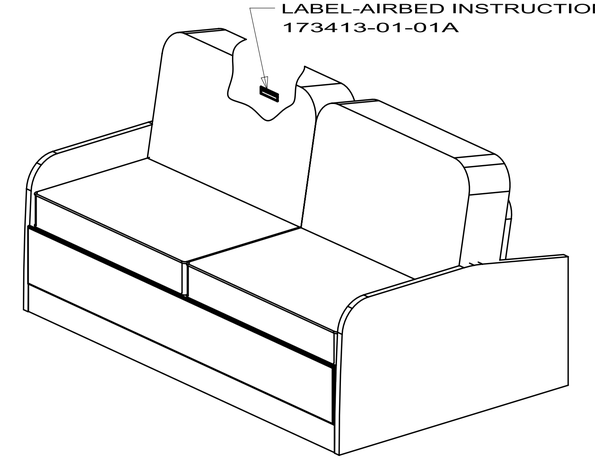

LOCATE BEHIND SOFA ON SIDEWALL AND LEVEL WITH TOP EDGE OF SOFA ARM

FIRST USED	10 700-SERIES
	DO NOT SCALE DRAWING
TITLE:	LABEL LOCATION INSTL
SHEET 4	PART NO 170138 REV

10/24/2009

DWG NO 170138

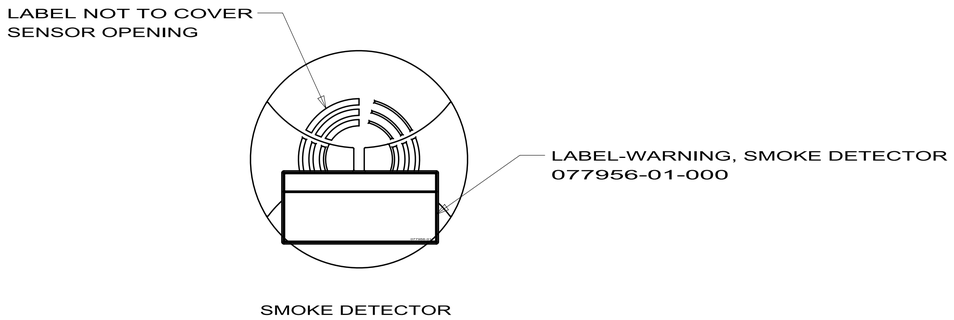

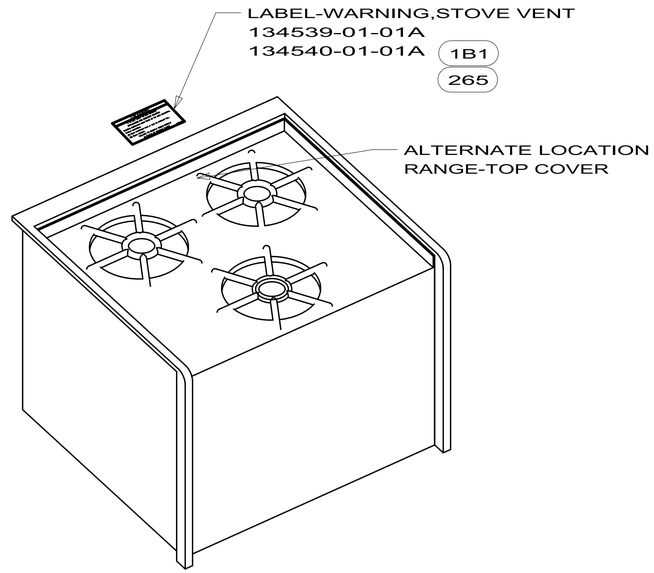

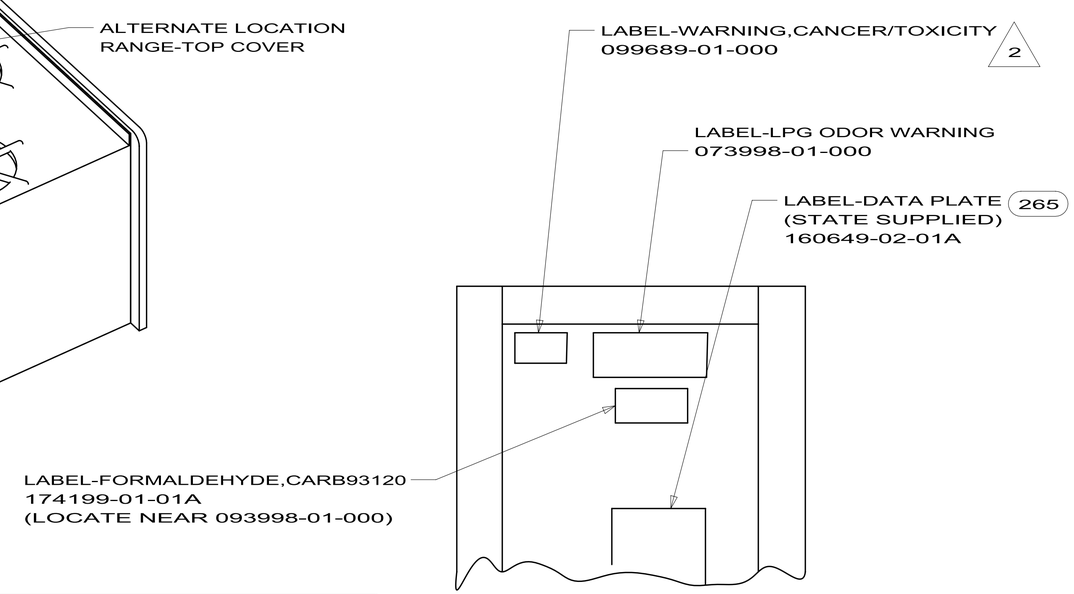

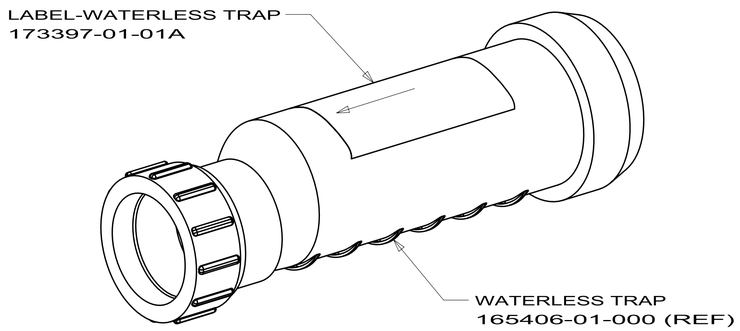

DRAINAGE 728B (ONLY)

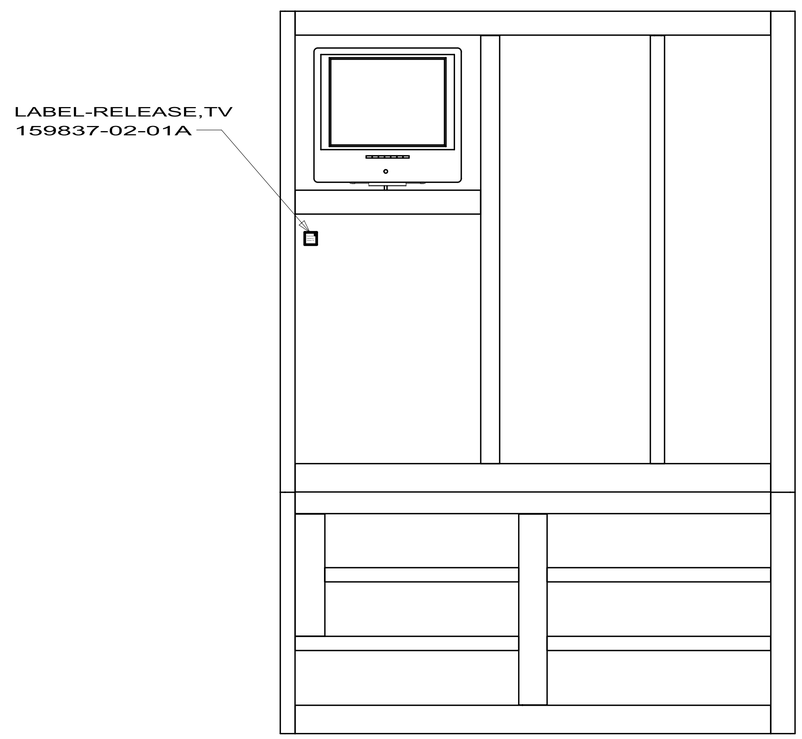

728B BEDROOM TV IN WARDROBE CABINET

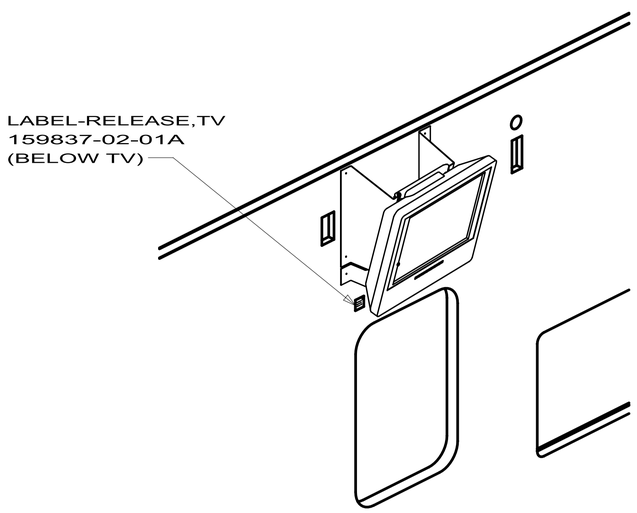

BEDROOM TV 730C

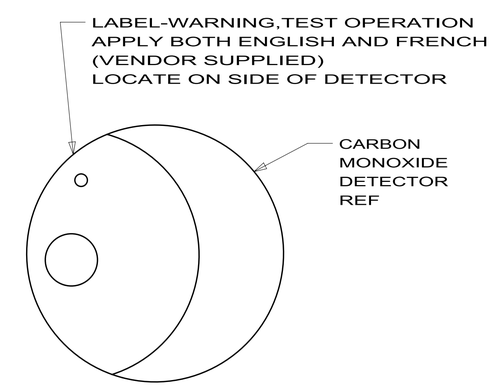

265 CODES/STANDARDS-CSA

FIRST USED	10 700-SERIES
	DO NOT SCALE DRAWING
TITLE:	LABEL LOCATION INSTL
SHEET 5	PART NO 170138 REV

10/24/2009

DWG NO 170138

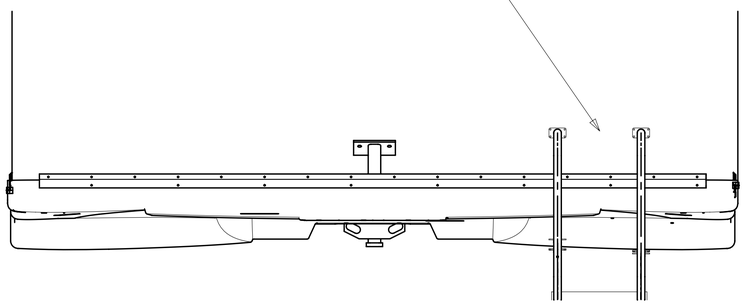

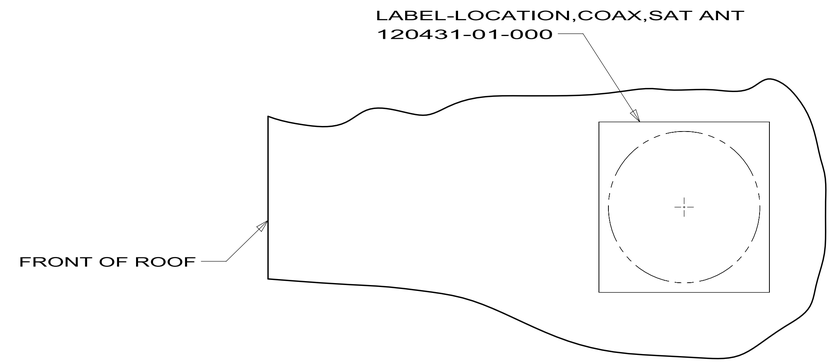

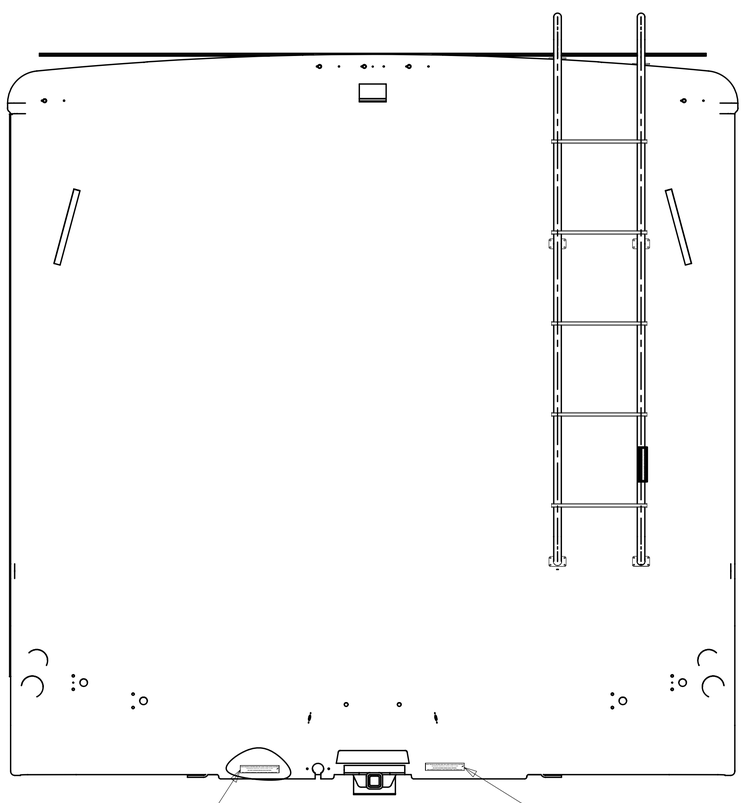

FIRST USED	10 700-SERIES
	DO NOT SCALE DRAWING
TITLE:	LABEL LOCATION INSTL
SHEET 6	PART NO 170138 REV

10/24/2009

DWG NO 170138

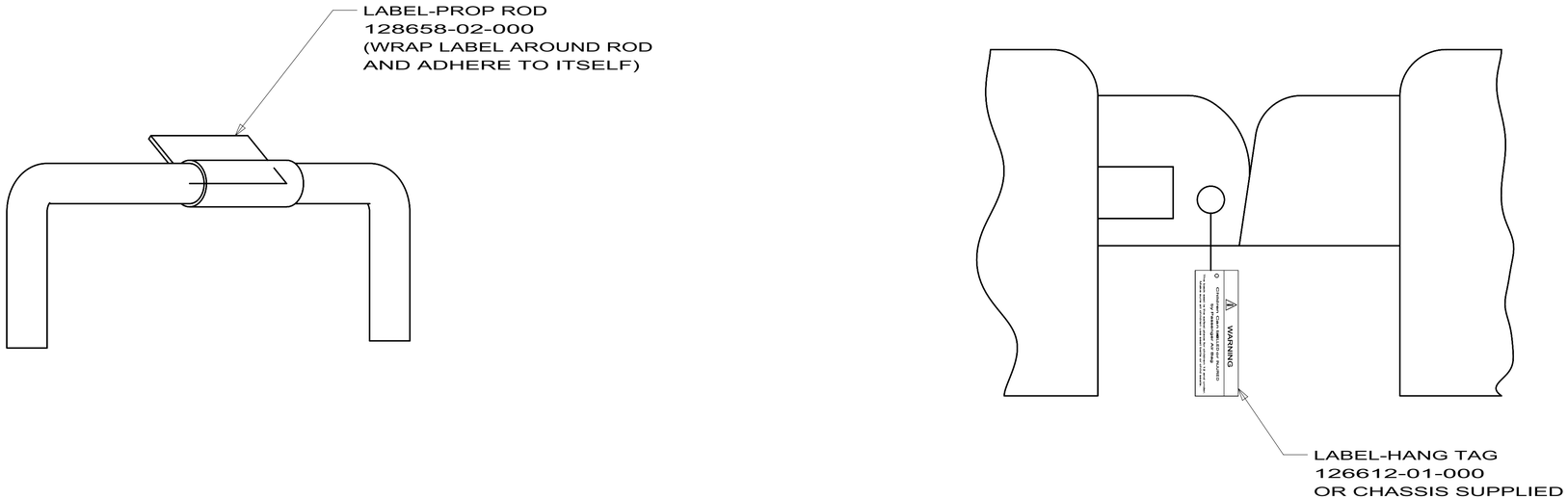

COACH BATTERY

FIRST USED	10 700-SERIES
DO NOT SCALE DRAWING	
TITLE:	LABEL LOCATION INSTL
SHEET 7	PART NO 170138 REV

10/24/2009

DWG NO 170138

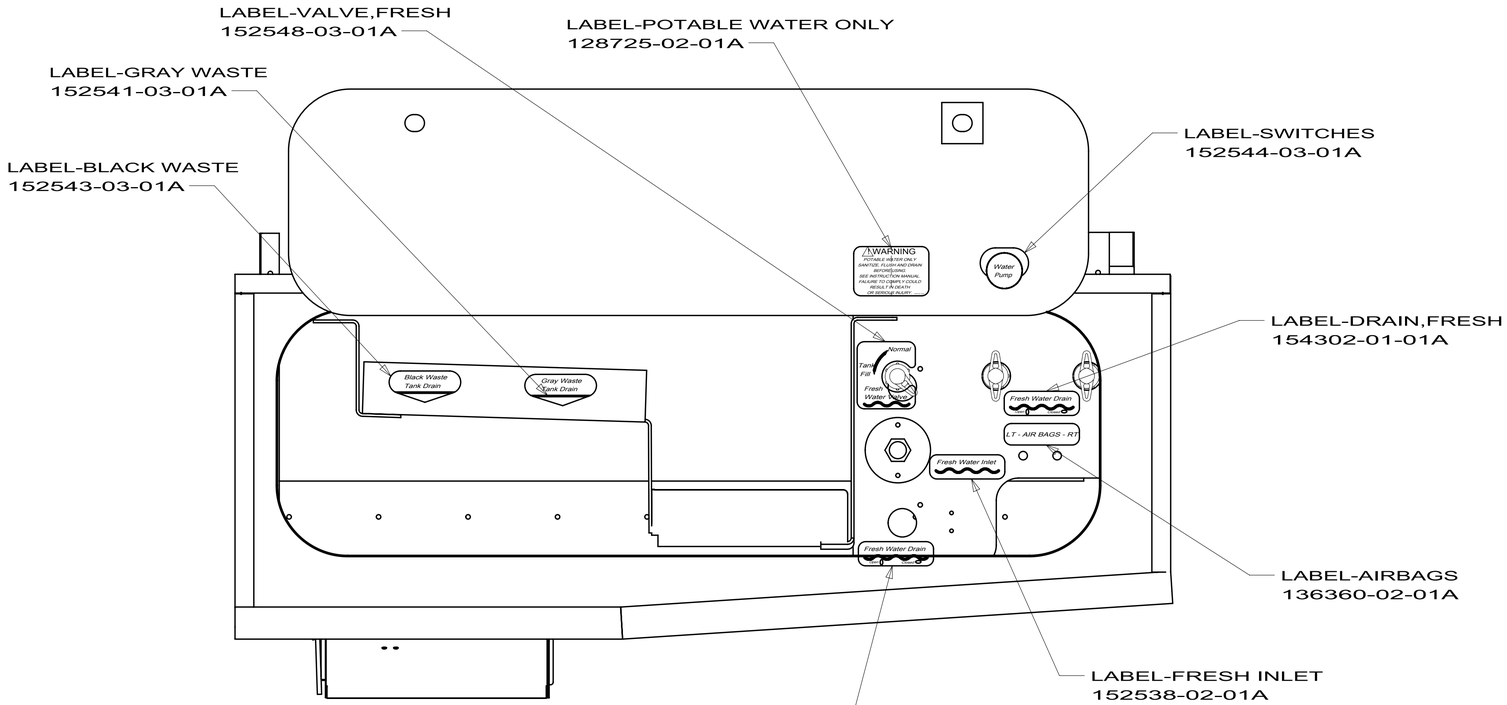

IJ4 LABEL-DRAIN,FRESH
154302-01-01A

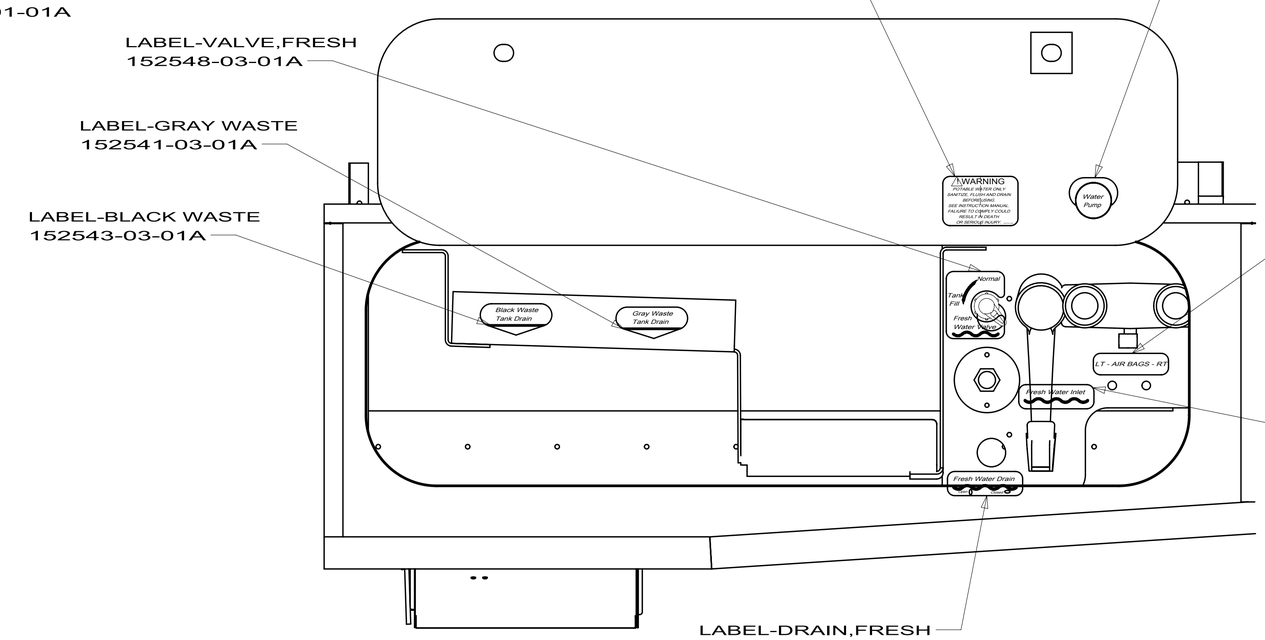

64R

64R EXTERIOR WASH STATION

IJ4 EXTERIOR WASH STATION-W/O

FIRST USED	10 700-SERIES
	DO NOT SCALE DRAWING
TITLE:	LABEL LOCATION INSTL
SHEET 8	PART NO 170138 REV

10/24/2009