| DWG NO | ROLLER | DIM A | DIM B | SHEET | MODEL |
|---|---|---|---|---|---|
| 170703-01 | 171153-03-CHT | 187 | 10' | 1,2 | 524J |
| 170703-02 | 171153-05-CHT | 187 | 12.5' | 1,2 | 524K |
| 170703-03 | 171153-03-CHT | 198 | 10' | 2,3 | 524P |
| 170703-04 | 171153-04-CHT | 1118 | 12' | 2,3 | 524DL |
| 170703-05 | 171153-06-CHT | 198 | 15' | 1,2 | 524A |

| RELEASE | REV A | DATE | DWG NO 170703 |
|---|---|---|---|
| REV | ZONE | REVISION RECORD | DATE | DFTR-ORIG |

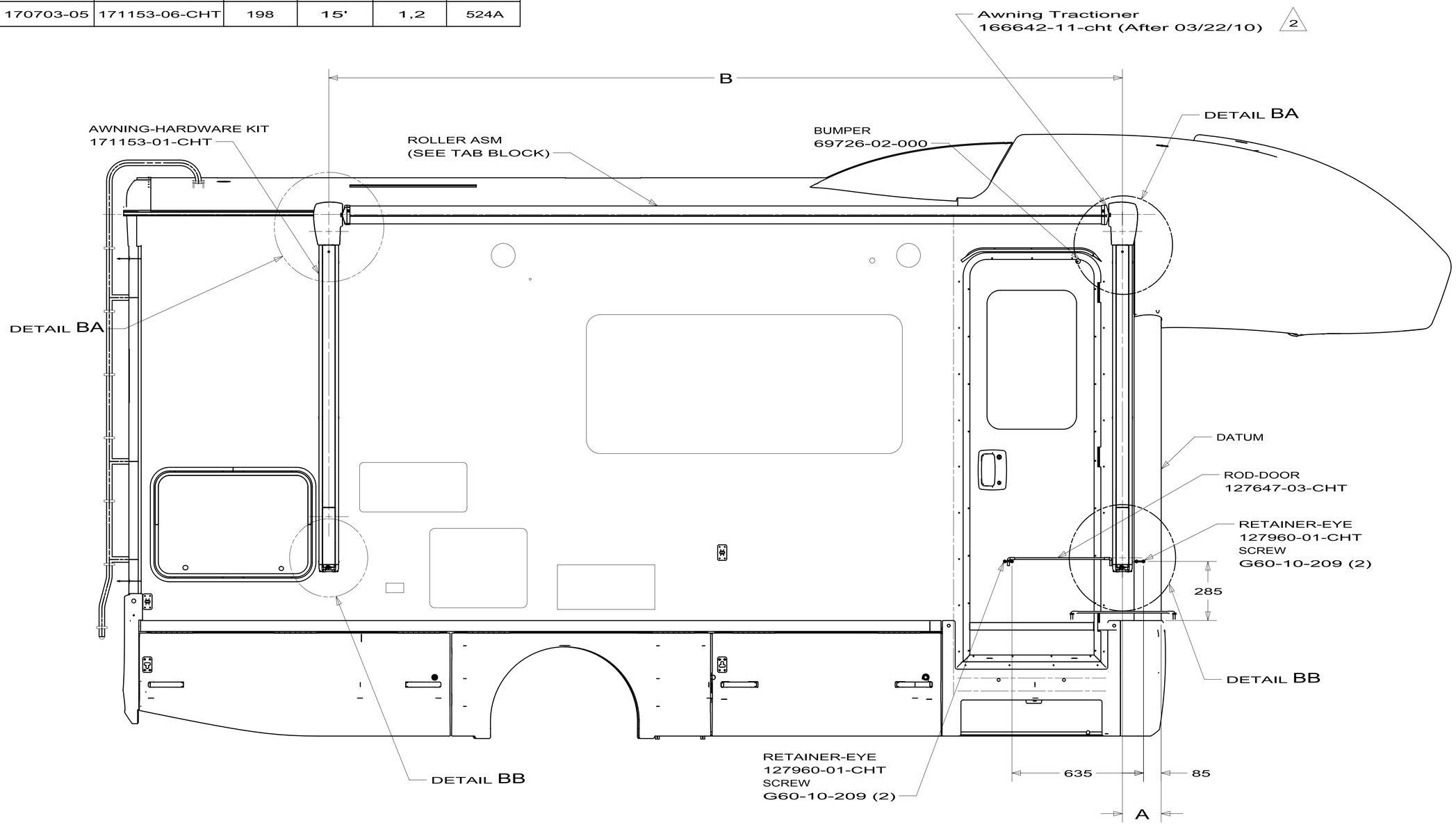


2 USE WITH UNIGUARD COVER ONLY

1. USE IN PLACE OF KIT SUPPLIED.

NOTES:

COPYRIGHT 2010
WINNEBAGO
INDUSTRIES, INC.

| | |
|---|---|
| DFTR | ORIG. DATE |
| CHKR | ALL DIMENSIONS ARE IN MILLIMETERS |
| P.E. | |
| M.E. | FIRST USED |
| DSNR | 10 500-SE |

UNSPECIFIED TOLERANCES ARE:

| | | |
|---|---|---|
| WHOLE DIM (X) | : | 3 |
| ONE-PLACE (X.X) | : | 1.5 |
| TWO-PLACE (X.XX) | : | 0.50 |
| ANGLE | : | 1° |

MATERIAL:

THIRD ANGLE PROJECTION

DO NOT SCALE DRAWING

REFER TO ES0018 FOR FASTENER TIGHTENING GUIDELINES

TITLE:

AWNING INSTL

SHEET 1 OF 3 | PART NO 170703 | REV

REF: 1

3/17/2010

DWG NO 170703

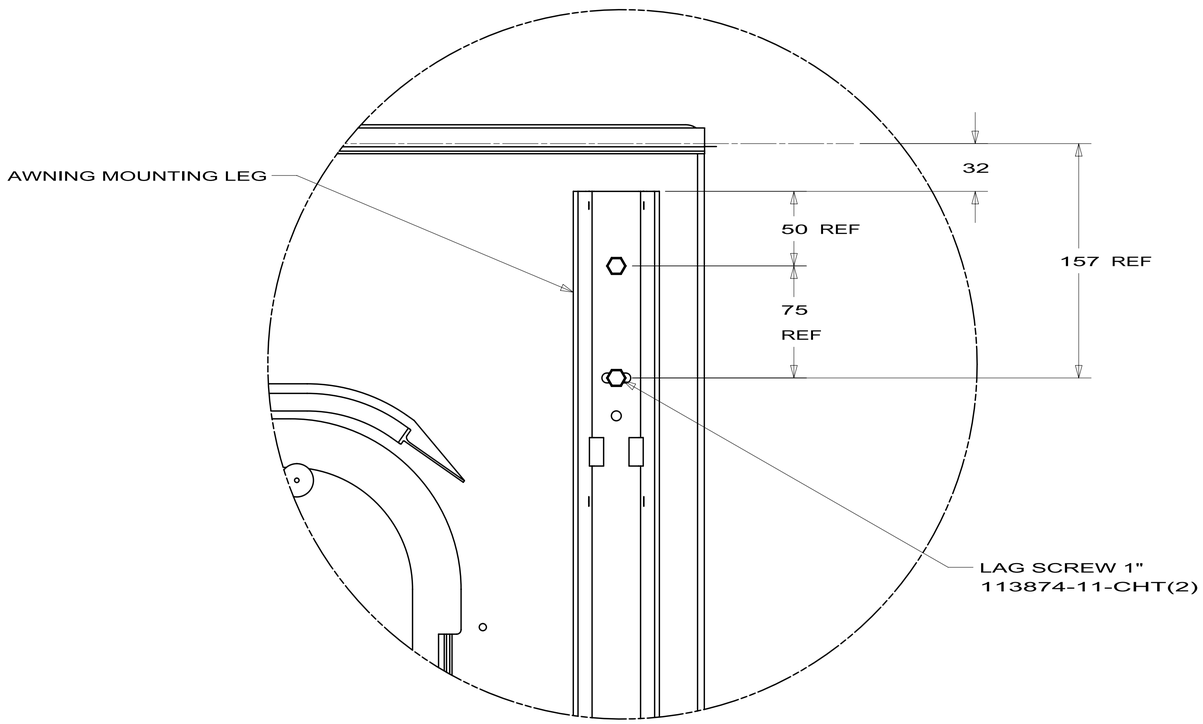


DETAIL BA
(SHOWN WITHOUT COVERS)
(2 PLACES)

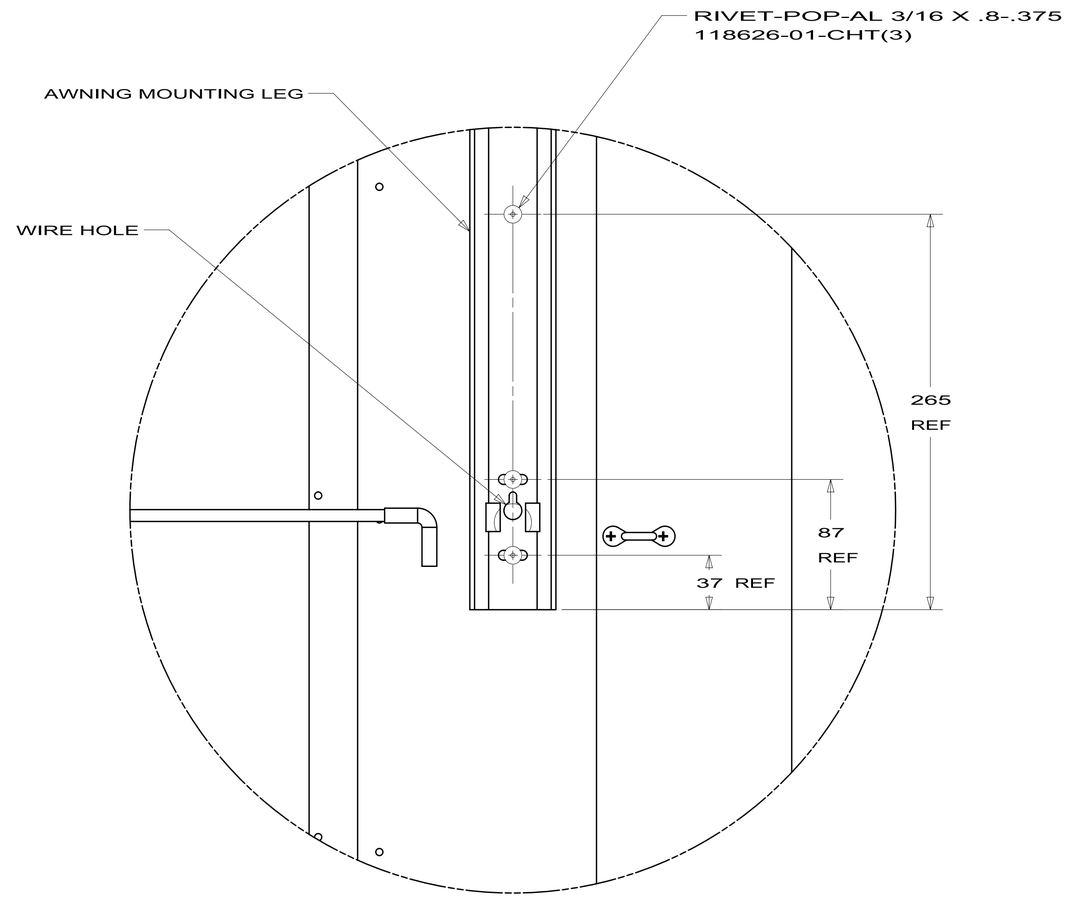


DETAIL BB
(SHOWN WITHOUT COVERS)
(2 PLACES)

| | |
|---|---|
| FIRST USED | 10 500-SE |
| | DO NOT SCALE DRAWING |
| TITLE: | AWNING INSTL |
| SHEET 2 | PART NO 170703 REV |

3/17/2010

DWG NO 170703

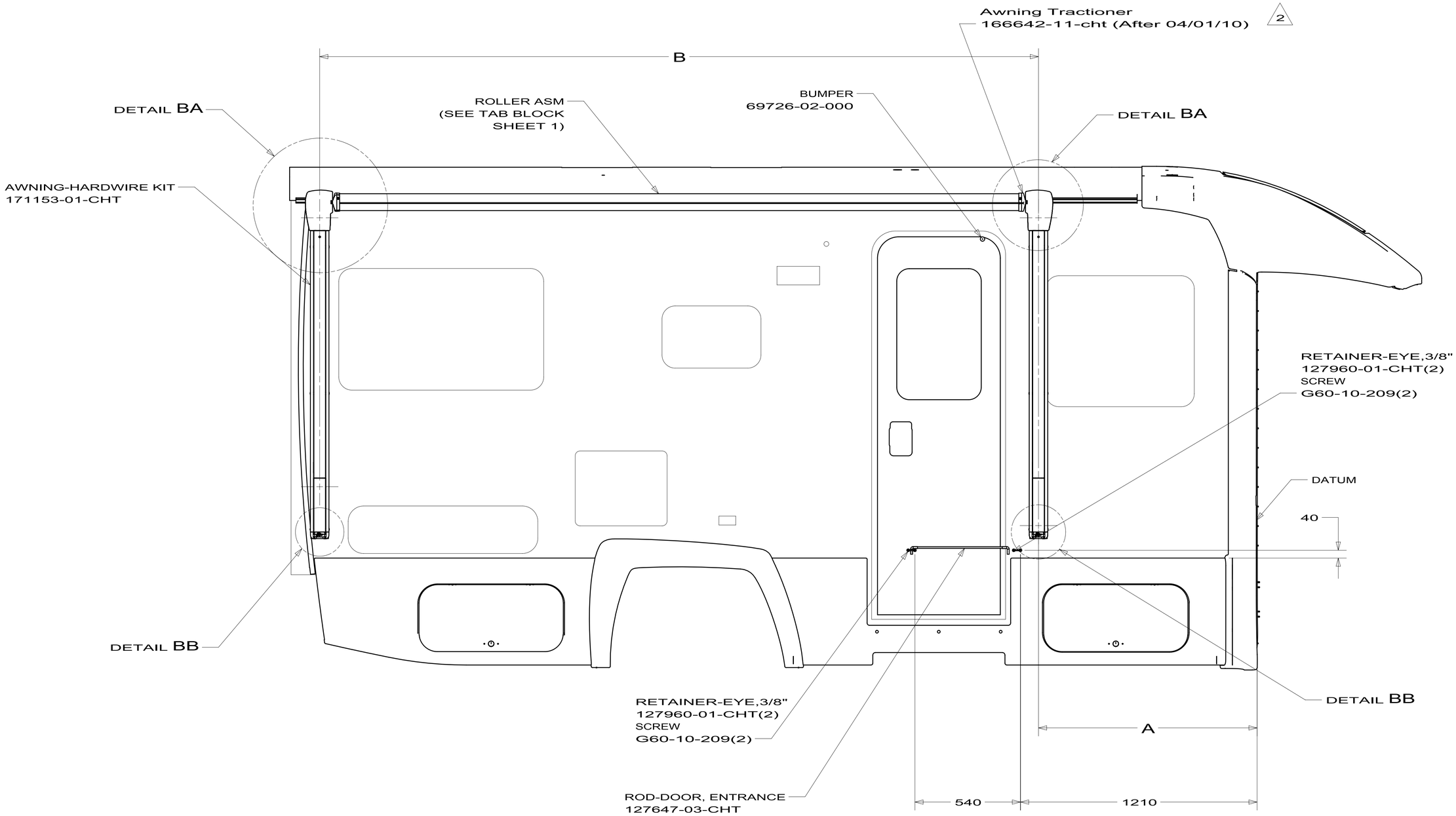


| | |
|---|---|
| FIRST USED | 10 500-SE |
| | DO NOT SCALE DRAWING |
| TITLE: | AWNING INSTL |
| SHEET 3 | PART NO 170703 REV |

3/17/2010

| RELEASE | REV A | DATE | DWG NO 169632 |
|---|---|---|---|

| REV | ZONE | REVISION RECORD | DATE | DFTR-ORIG |
|---|---|---|---|---|

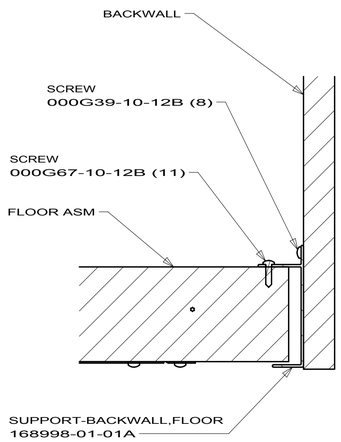


SECTION AA-AA

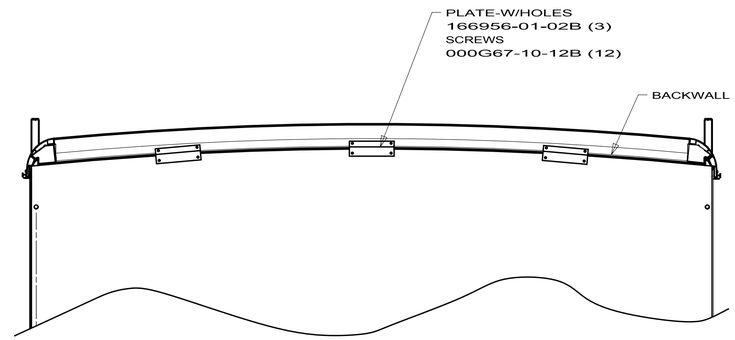


VIEW AB-AB

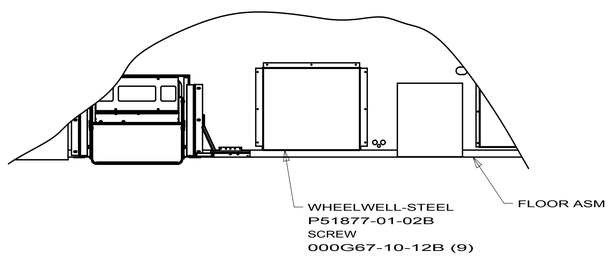


VIEW AE-AE

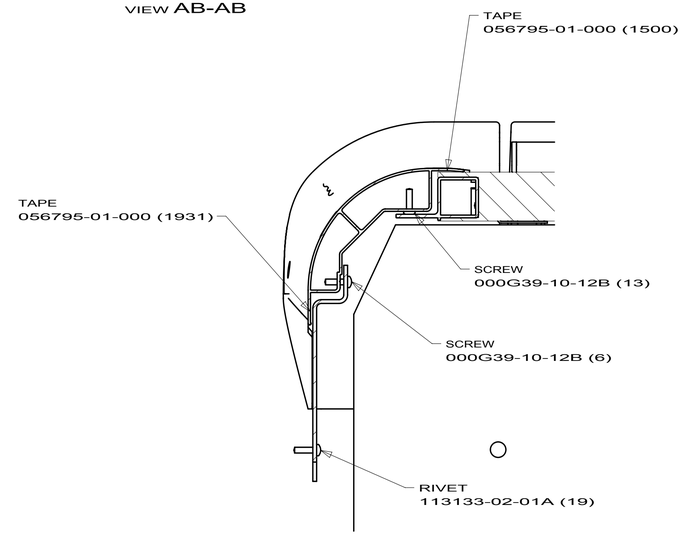


SECTION AF-AF

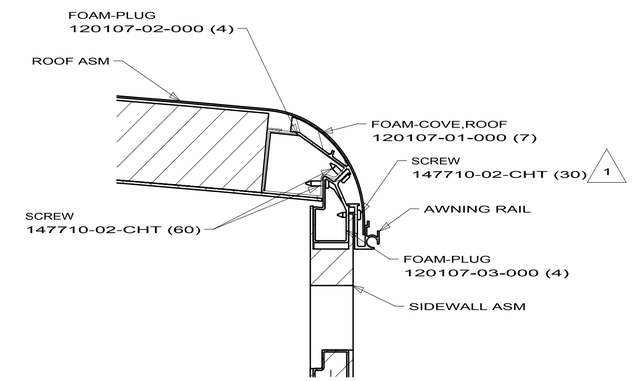


SECTION AC-AC

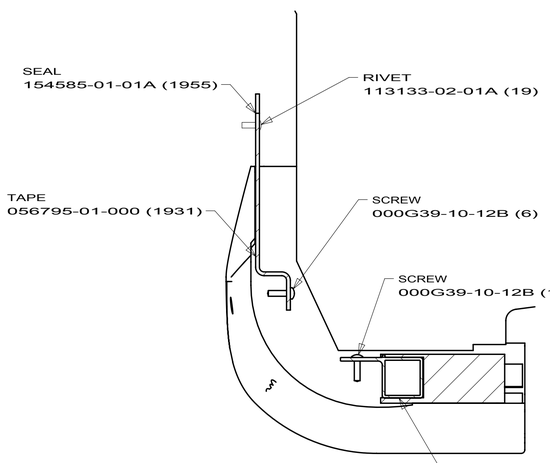


SECTION AD-AD

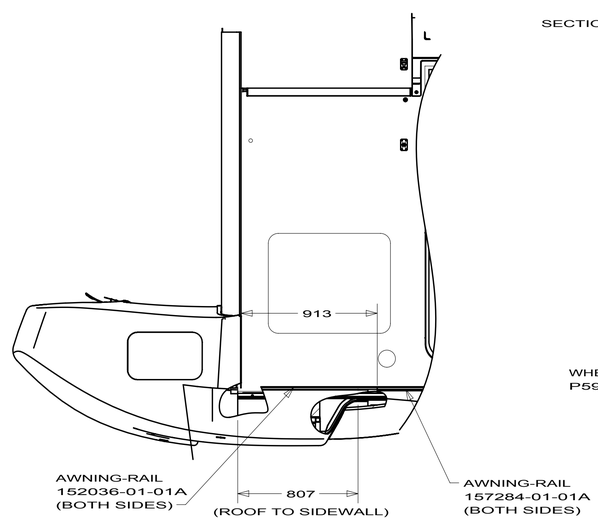


DETAIL AG

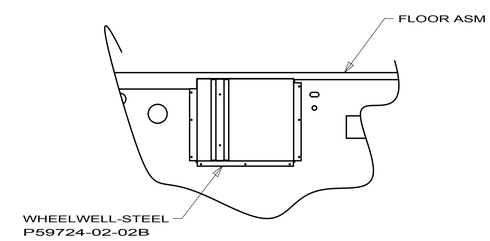


VIEW AL-AL

1. SCREW MUST BE LOCATED WITH 50MM OF RAIL-AWNING SPICE. DRILL ADDITIONAL HOLES AND ADD SCREWS AS REQUIRED.

NOTES:

COPYRIGHT 2010
WINNEBAGO
INDUSTRIES, INC.

| | |
|---|---|
| DFTR | ORIG. DATE |
| CHKR | ALL DIMENSIONS ARE IN MILLIMETERS |
| P.E. | |
| M.E. | FIRST USED |
| DSNR | 10 524P |
| UNSPECIFIED TOLERANCES ARE: WHOLE DIM (X) : 3; ONE-PLACE (X.X) :; TWO-PLACE (X.XX) :; ANGLE : | MATERIAL: |
| THIRD ANGLE PROJECTION | |
| DO NOT SCALE DRAWING | REFER TO ES0018 FOR FASTENER TIGHTENING GUIDELINES |
| TITLE: BODY INSTL-SECTIONS | |
| SHEET 1 OF 4 | PART NO 169632 REV |

REF:

4/27/2010

DWG NO 169632

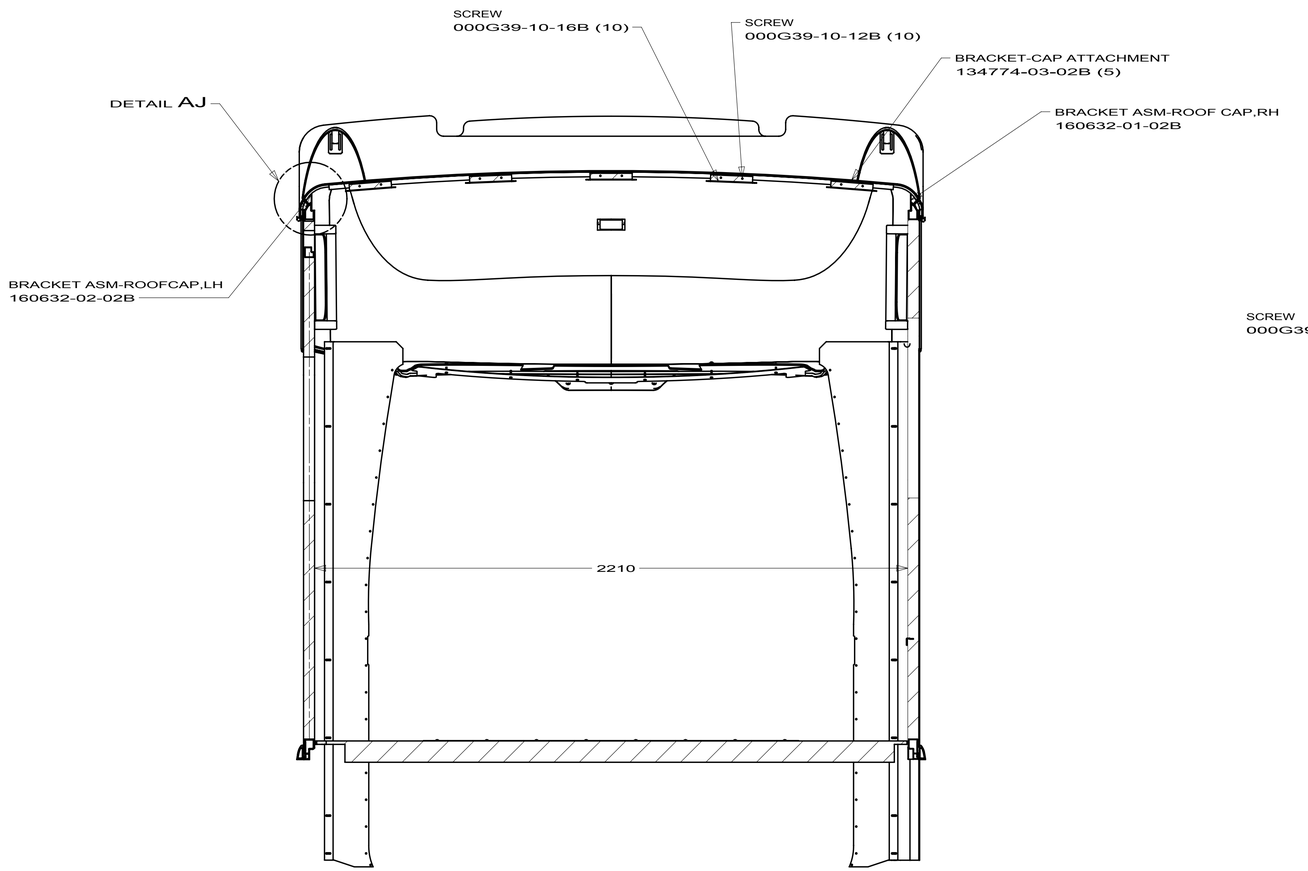


SECTION AH-AH

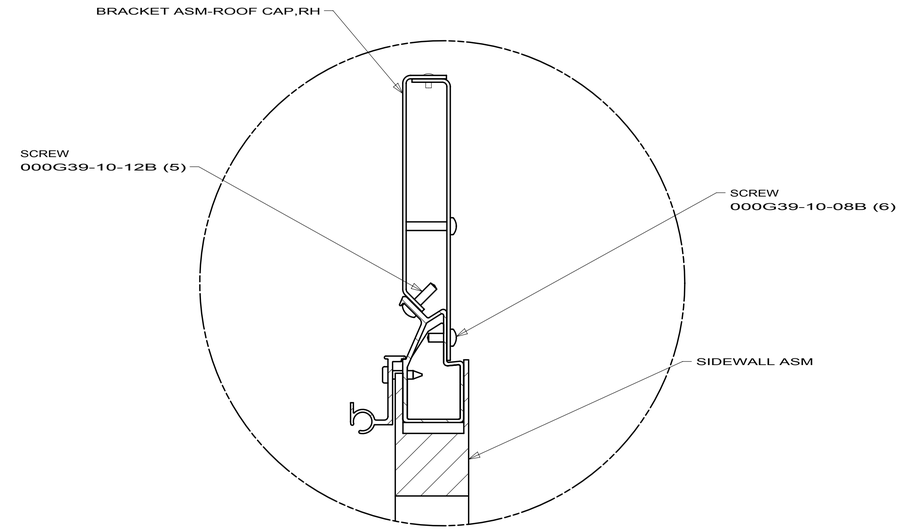


DETAIL AJ (RH SHOWN)
(LH SIMILAR)

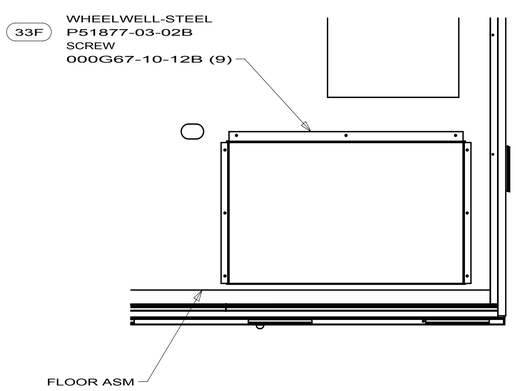


SECTION AN-AN

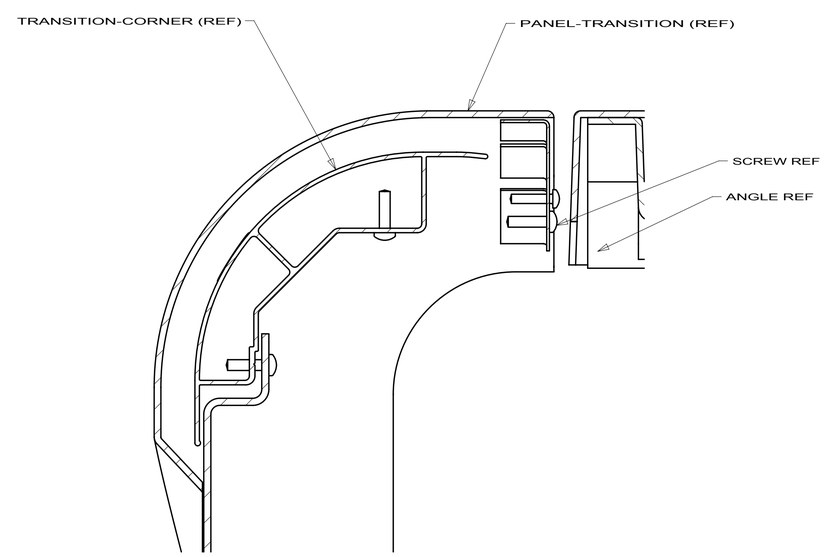


SECTION AK-AK

33F GEN-3.2 KW ONAN DIESEL

| | |
|---|---|
| FIRST USED | 10 524P |
| DO NOT SCALE DRAWING | |
| TITLE: | BODY INSTL-SECTIONS |
| SHEET 2 | PART NO 169632 REV |

4/27/2010

DWG NO 169632

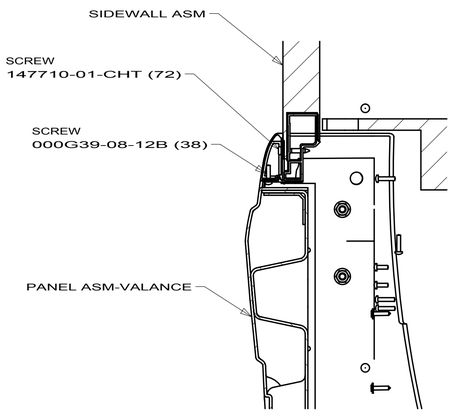


SECTION BA-BA

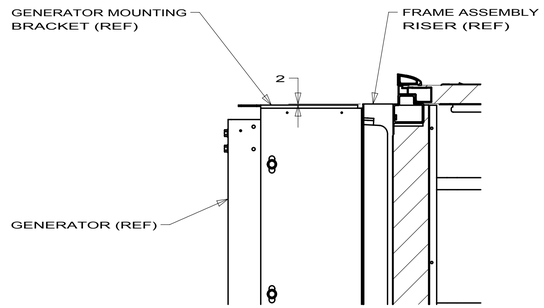


SECTION BB-BB

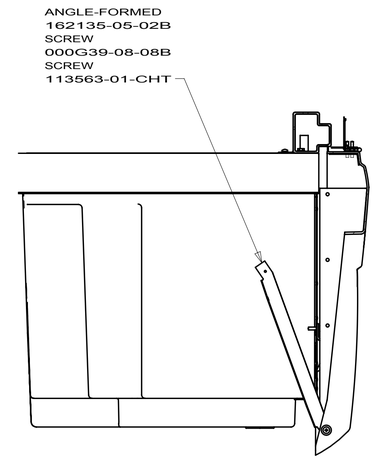


SECTION BP-BP

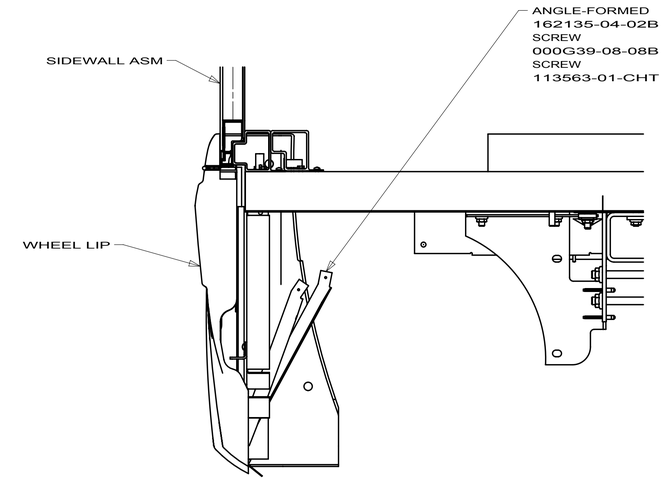


SECTION BK-BK
(ROTATED)

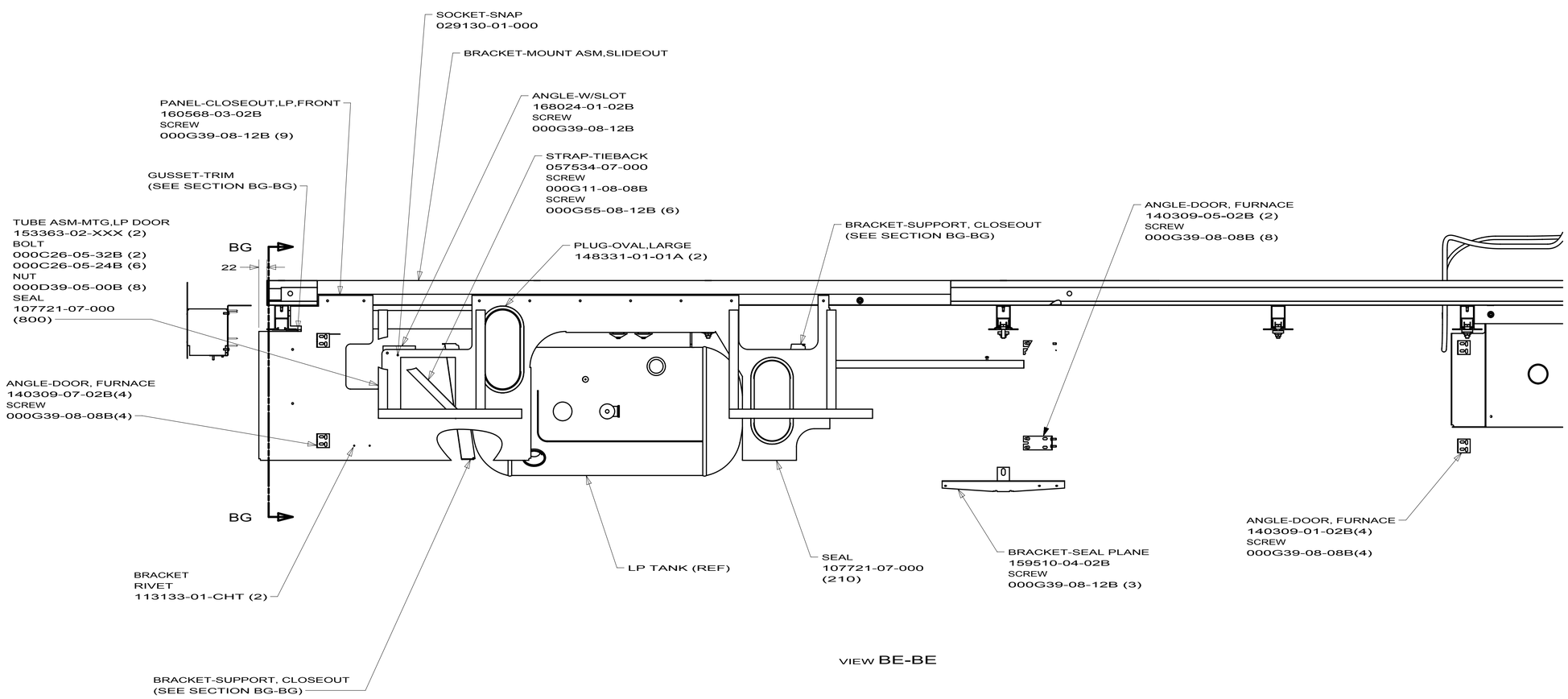


VIEW BE-BE

1A3 GENERATOR WITHOUT

| | |
|---|---|
| FIRST USED | 10 524P |
| DO NOT SCALE DRAWING | |
| TITLE: | BODY INSTL-SECTIONS |
| SHEET 3 | PART NO 169632 REV |

4/27/2010

DWG NO 169632

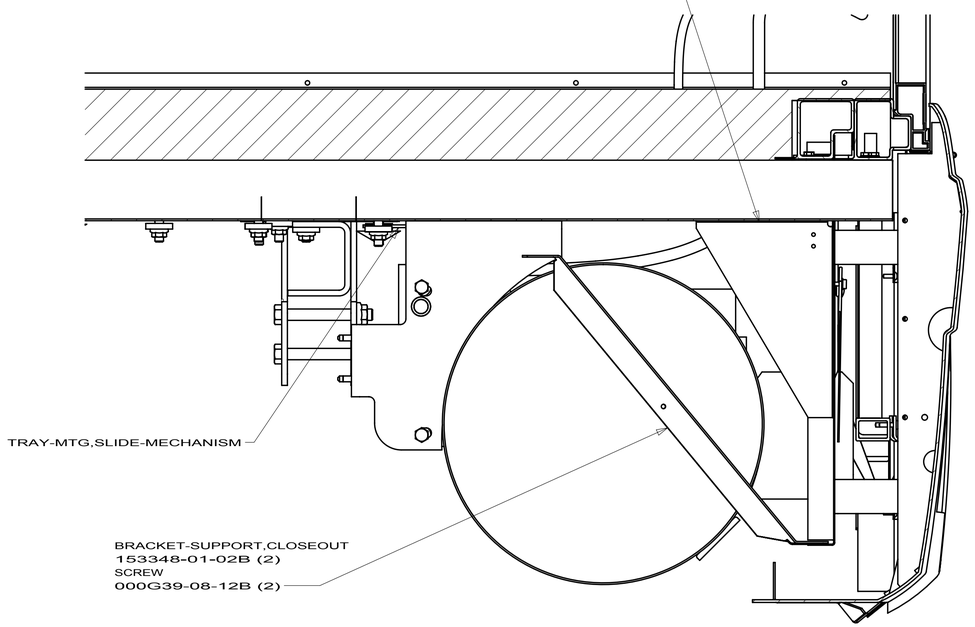


SECTION BG-BG

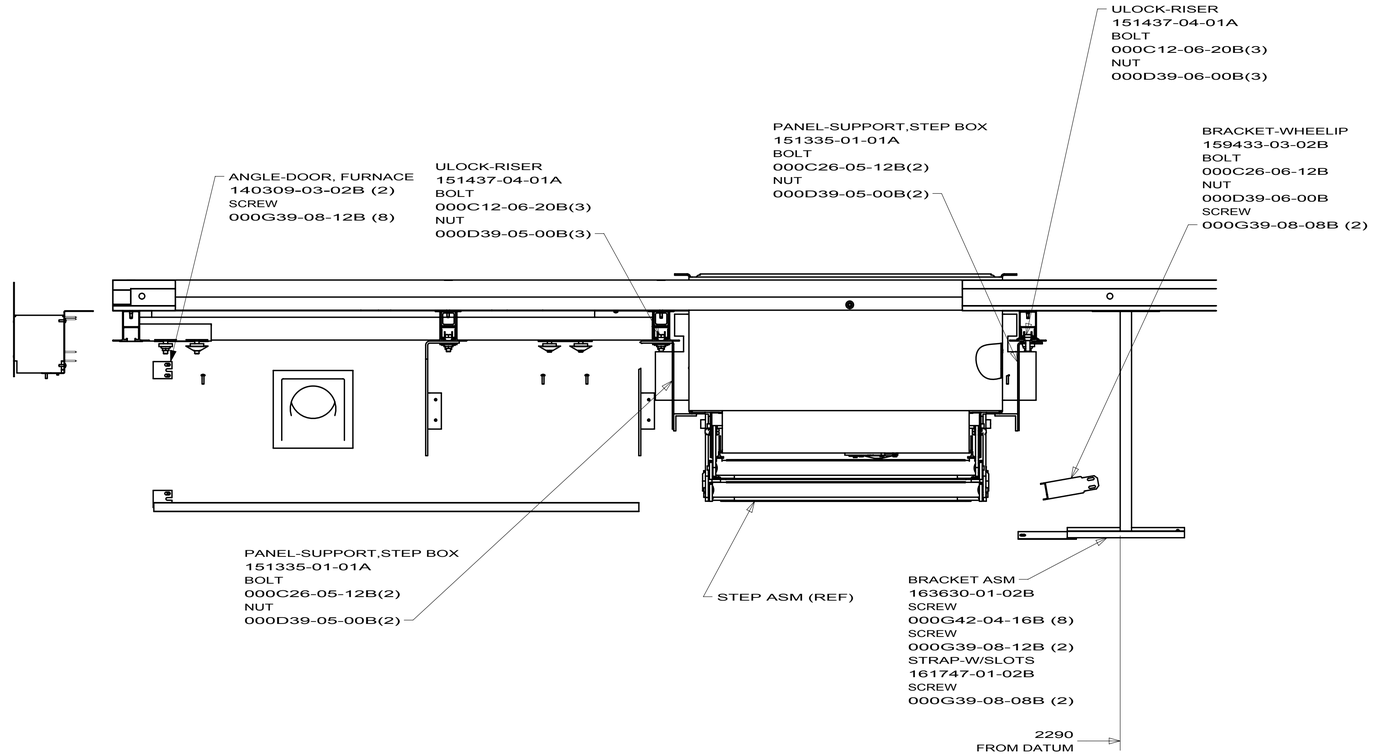


VIEW BF-BF

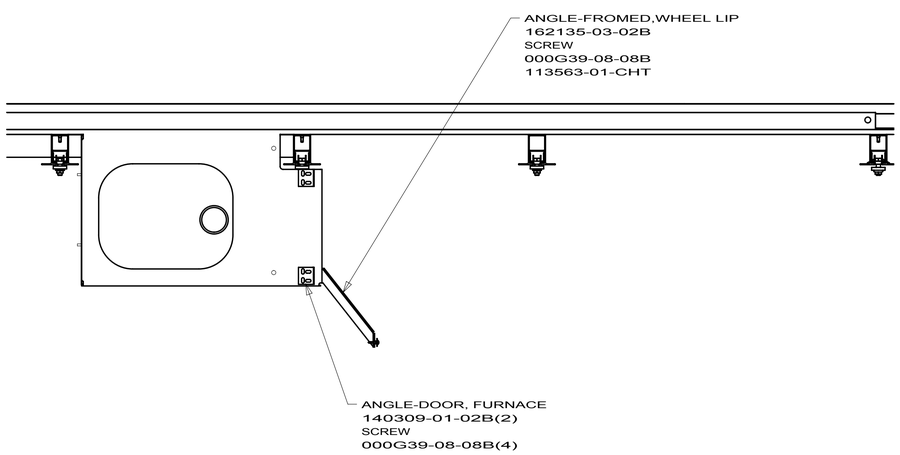


SECTION BH-BH

| | |
|---|---|
| FIRST USED | 10 524P |
| DO NOT SCALE DRAWING | |
| TITLE: | BODY INSTL-SECTIONS |
| SHEET 4 | PART NO 169632 REV |

4/27/2010

| RELEASE | REV A | DATE | DWG NO 160142 |
|---|---|---|---|

| REV | ZONE | REVISION RECORD | DATE | DFTR-ORIG |
|---|---|---|---|---|

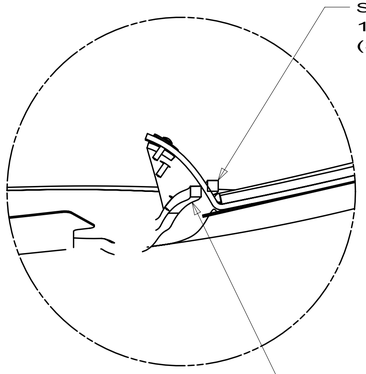


VIEW C

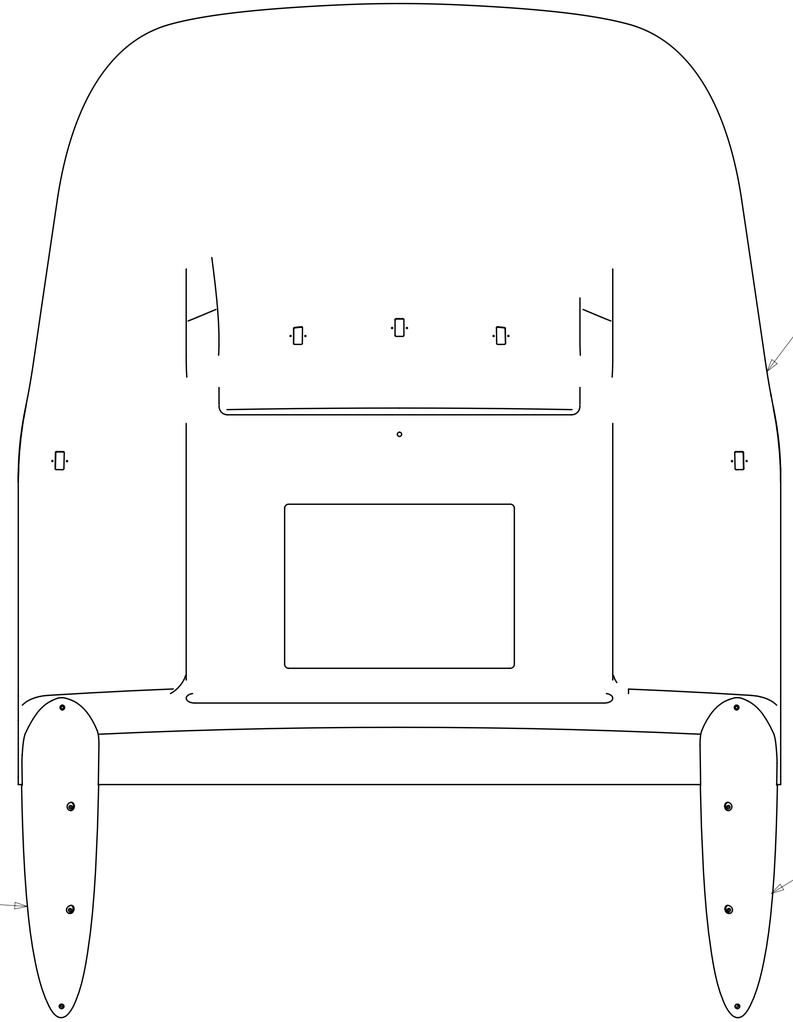

PANEL ASM-FRONT
160591-01-XXX
160591-02-XXX (808) OR (1L9)
160591-03-XXX (094)
HEADLINER ASM-CARPET W/FOAM
167068-01-01A
INSULATION-AIR POCKET W/FOIL
105290-01-000

△5 TRIM ASM-ROOF, APPLIQUE,LH
160510-04-XXX
SCREW
G39-10-20U (2)
G62-08-12U (2)

TRIM ASM-ROOF, APPLIQUE,RH △5
160510-03-XXX
SCREW
G39-10-20U (2)
G62-08-12U (2)

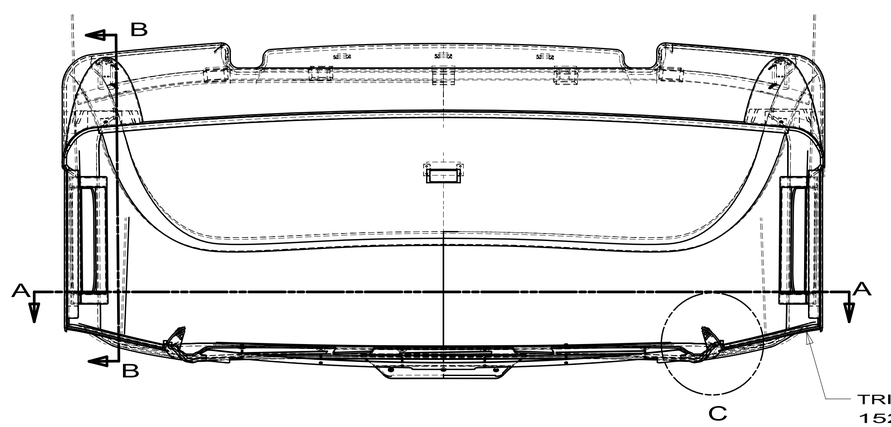


TRIM-CLOSEOUT,PANEL △4
152885-02-CHT (2)
RIVET
41930-11-000 (2)

△9 AS REQUIRED.

△8 REUSE THE DODGE SPRINTER SCREWS AND WASHERS FROM THE RUNNING LIGHTS TO FASTEN TRIM PANEL.

△7 TORQUE BOLTS TO 2 ft-lbs.

△6 USE UNDERCOATING 100053-04-000 TO COAT ANY HOLES THAT PENETRATE CAB ROOF.

△5 USE SILICONE, 131264-01-CHT A/R TO BOND TRIM ASM-ROOF TO CHANNEL-APPLIQUE ROOF.

△4 CLEAN BOTH SURFACES WITH ISOPROPYL ALCOHOL. USE TAPE-TRANSFER 76322-03-000 TO SECURE.

△3 USE ADHESIVE-RESIN 112901-03-000 (2) FOR BONDING PARTS.

2. ALL SEALANTS MUST BE APPLIED PER SPECIFICATIONS IN THE MANUFACTURING SEALANT MANUAL.

1. SEE DRAWING 112481-01-000 FOR INSTRUCTIONS ON APPLICATION.

NOTES:

(1L9) ENTERTAINMENT CENTER-CABOVER
(808) CABINET, FRONT CAB OVERHEAD
(094) WINDOWS - SE-GI

WINNEBAGO INDUSTRIES

COPYRIGHT 2009
WINNEBAGO
INDUSTRIES, INC.

| | |
|---|---|
| DFTR | ORIG. DATE |
| CHKR | ALL DIMENSIONS ARE IN MILLIMETERS |
| P.E. | |
| M.E. | FIRST USED |
| DSNR | 08 500 SERIES |

UNSPECIFIED TOLERANCES ARE:
WHOLE DIM (X) : 3
ONE-PLACE (X.X) : 1.5
TWO-PLACE (X.XX) : 0.50
ANGLE : 1°

MATERIAL:

THIRD ANGLE PROJECTION

DO NOT SCALE DRAWING

TITLE:
BODY PANEL INSTL-FRONT

SHEET 1 OF 2 | PART NO 160142 | REV

REF:

11/17/2009

DWG NO 160142

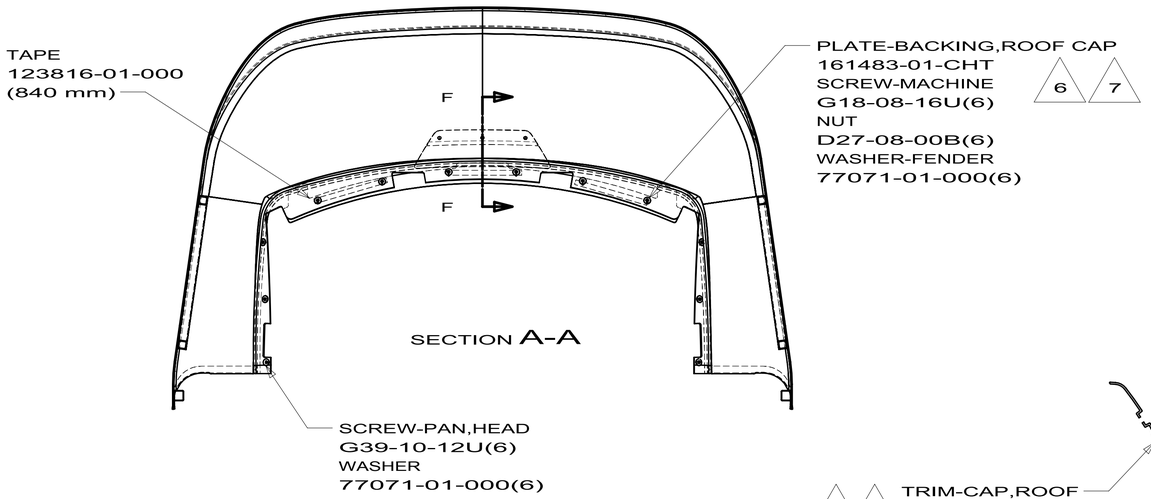


SECTION A-A

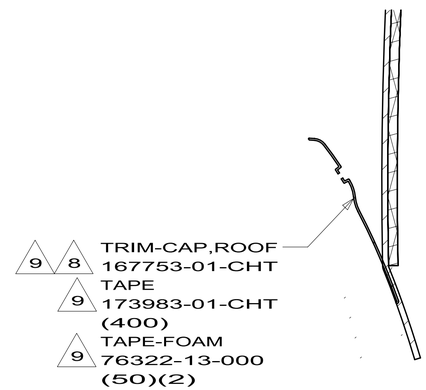


SECTION F-F

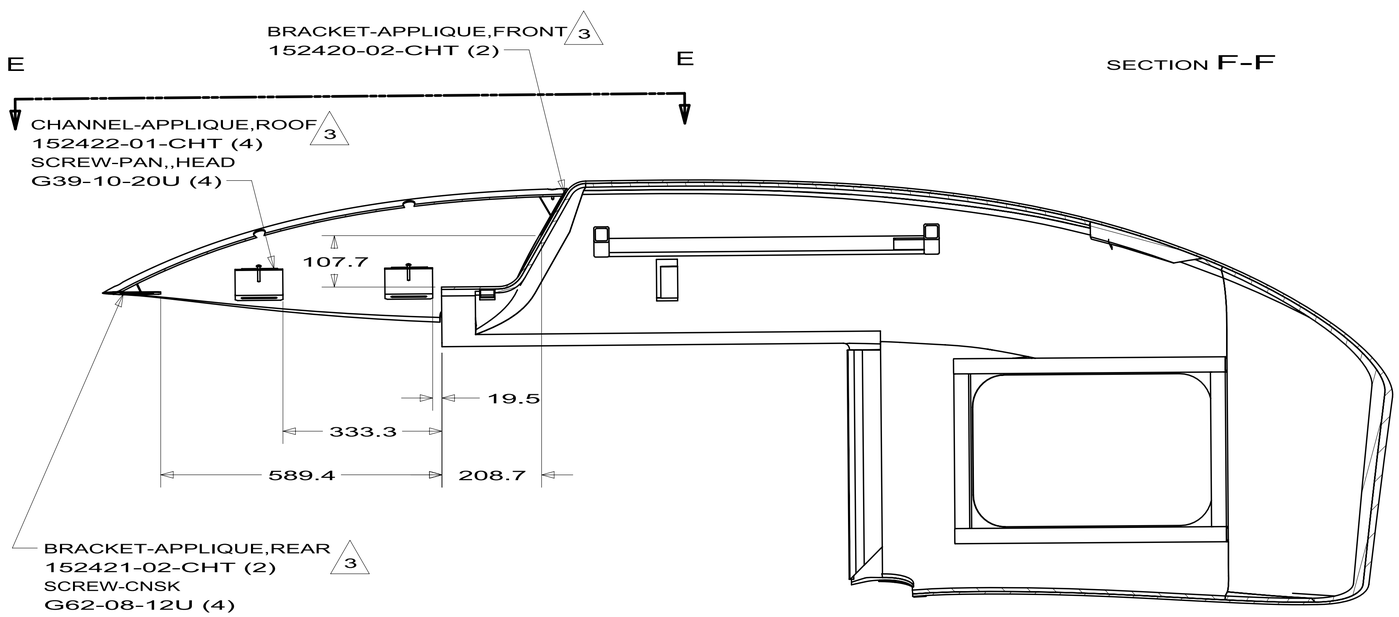


SECTION B-B

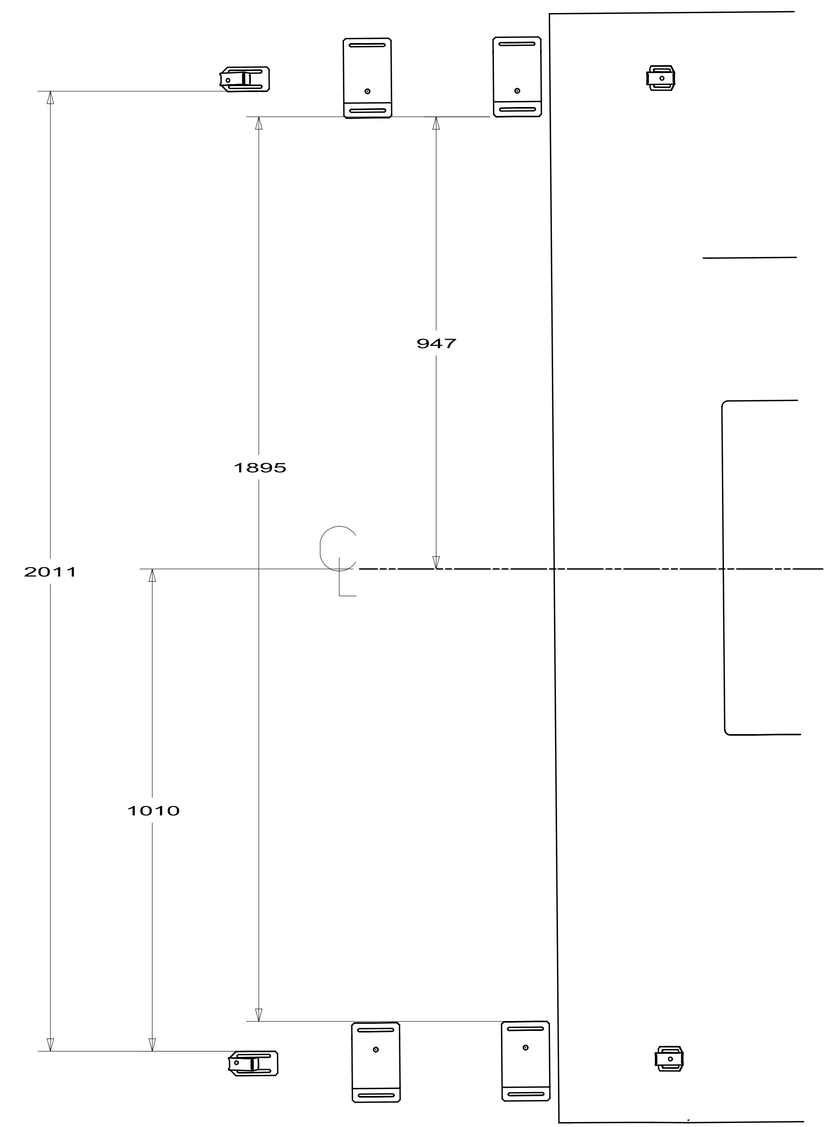


SECTION E-E

| | |
|---|---|
| FIRST USED | 08 500 SERIES |
| DO NOT SCALE DRAWING | |
| TITLE: | BODY PANEL INSTL-FRONT |
| SHEET 2 | PART NO 160142 REV |

11/17/2009

| DWG NO | SHEET |
|---|---|
| 160591-01 | 1,2 |
| 160591-02 | 3,4 |

808 OR 1L9

| RELEASE | REV A | DATE | DWG NO 160591 |
|---|---|---|---|
| REV | ZONE | REVISION RECORD | DATE | DFTR-ORIG |

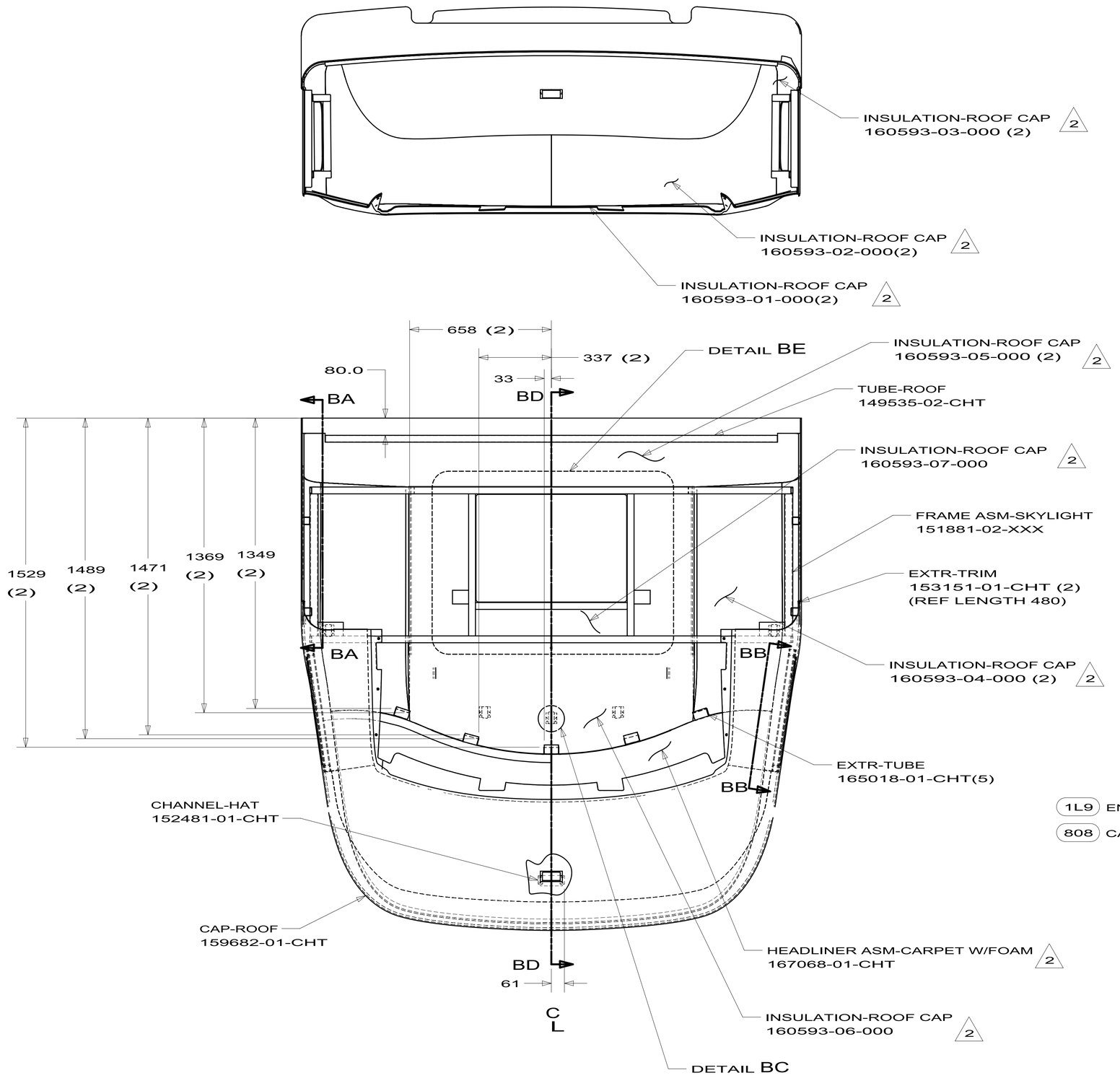


1L9 ENTERTAINMENT CENTER-CABOVER

808 CABINET, FRONT CAB OVERHEAD

3. USE BLACK PAINT 4308-01-000 A/R.

2 USE ADHESIVE-SILAPRENE DC-12786, 4006-08-000 FOR BONDING PARTS.

1. USE ADHESIVE-SIKA CARTRIDGE, 112481-09-000 FOR BONDING PARTS.

NOTES:

COPYRIGHT 2009
WINNEBAGO
INDUSTRIES, INC.

| | |
|---|---|
| DFTR | ORIG. DATE |
| CHKR | ALL DIMENSIONS ARE IN MILLIMETERS |
| P.E. | |
| M.E. | FIRST USED |
| DSNR | 08 500 SERIES |

UNSPECIFIED TOLERANCES ARE:
WHOLE DIM (X) : 3
ONE-PLACE (X.X) : 1.5
TWO-PLACE (X.XX) : 0.50
ANGLE : 1°

MATERIAL:

THIRD ANGLE PROJECTION

DO NOT SCALE DRAWING

TITLE: PANEL ASM-FRONT

SHEET 1 OF 4 | PART NO 160591 | REV

REF:

DWG NO 160591

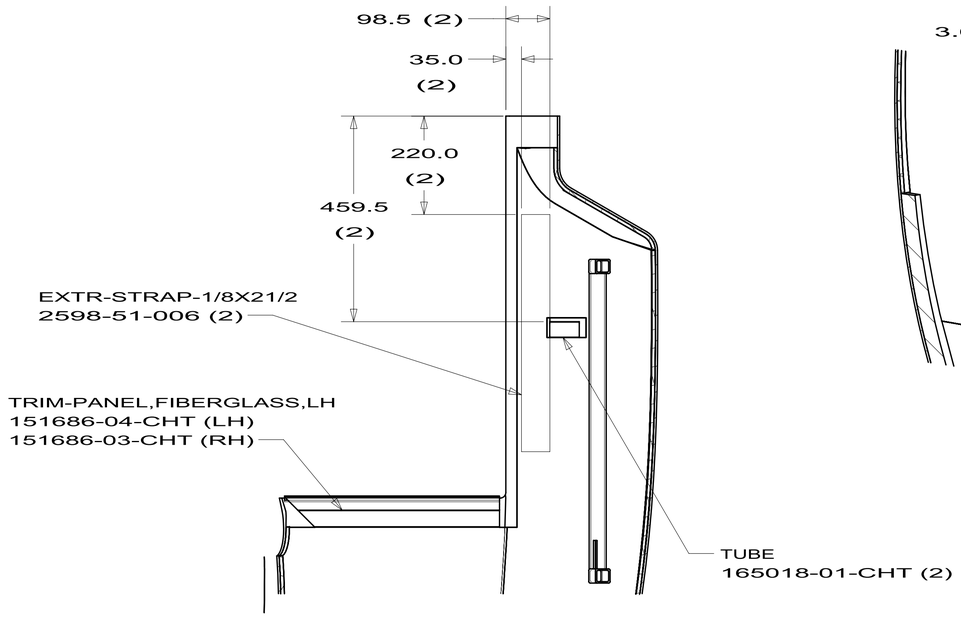


SECTION BA-BA
LH SHOWN
RH OPPOSITE

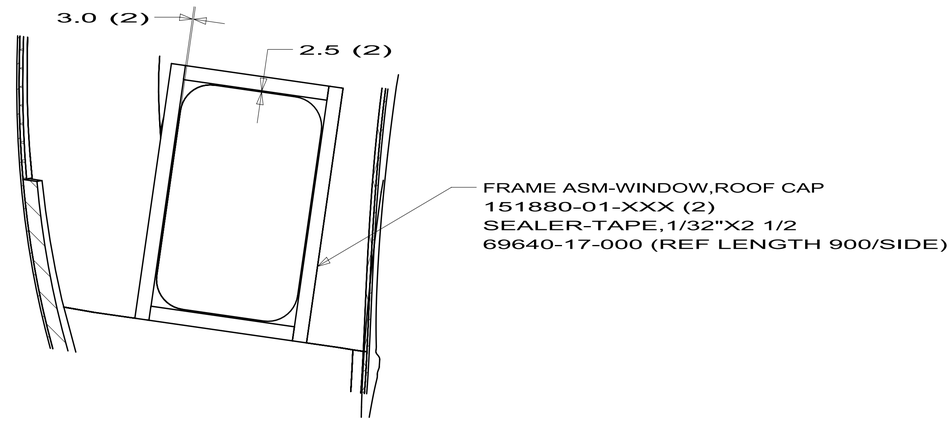


SECTION BB-BB
RH SHOWN
LH OPPOSITE

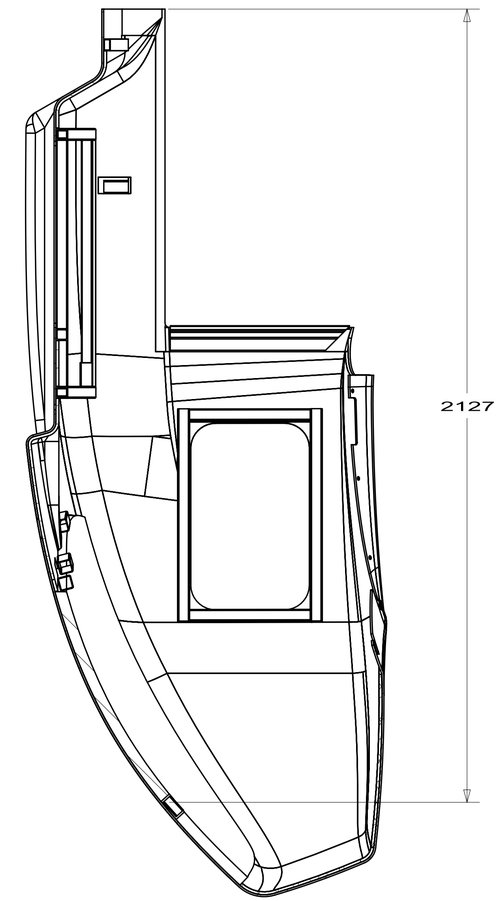


SECTION BD-BD

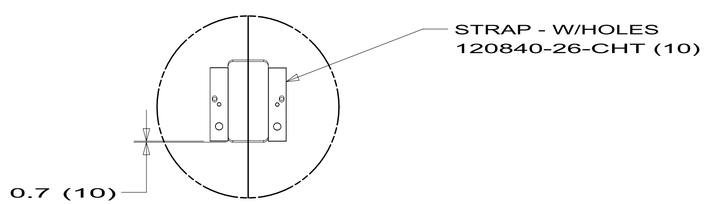


DETAIL BC

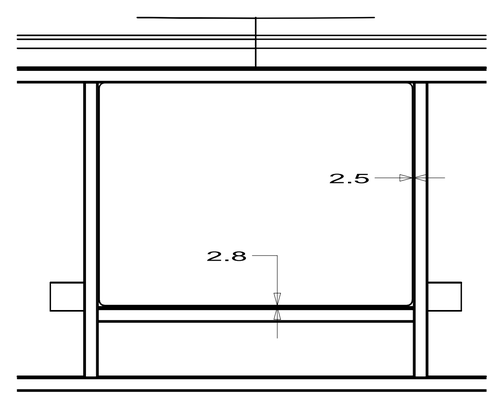


DETAIL BE

| | | |
|---|---|---|
| FIRST USED: 08 500 SERIES | | |
| DO NOT SCALE DRAWING | | |
| TITLE: PANEL ASM-FRONT | | |
| SHEET 2 | PART NO. 160591 | REV |

DWG NO 160591

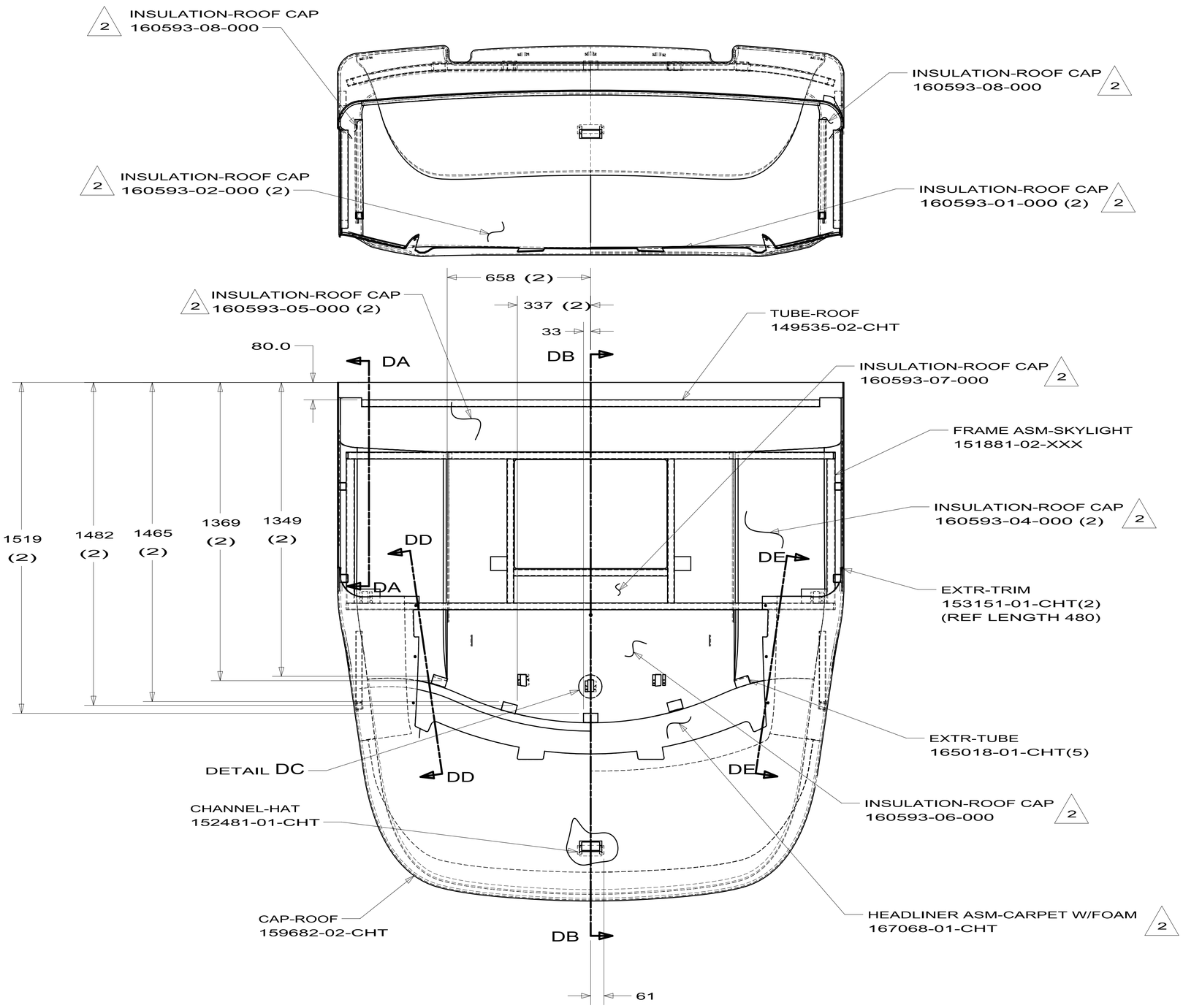


| | |
|---|---|
| FIRST USED | 08 500 SERIES |
| | DO NOT SCALE DRAWING |
| TITLE: | PANEL ASM-FRONT |
| SHEET 3 | PART NO 160591 REV |

DWG NO 160591

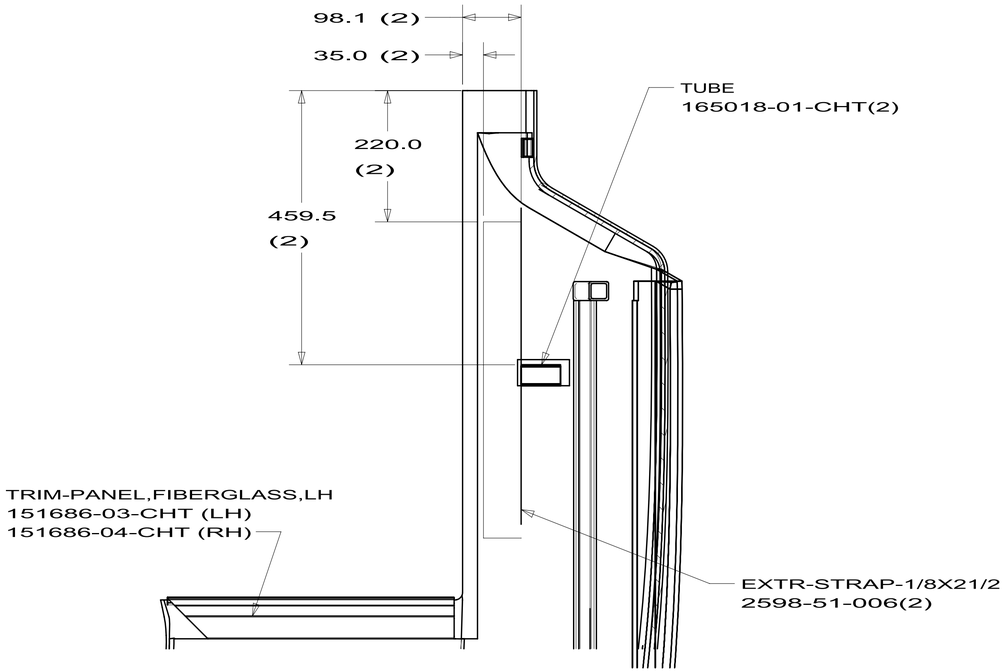


SECTION DA-DA

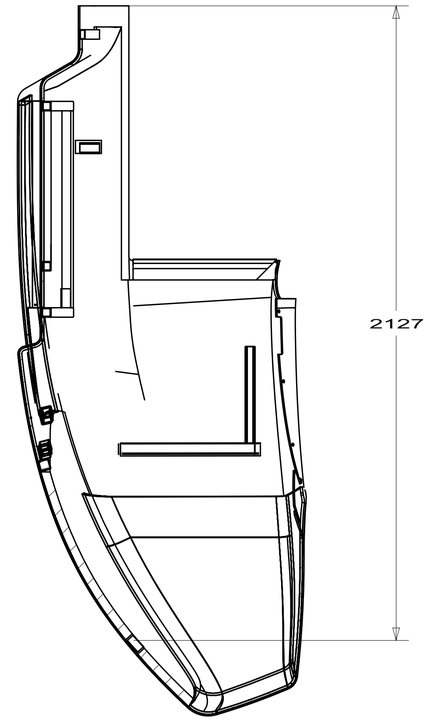


SECTION DB-DB

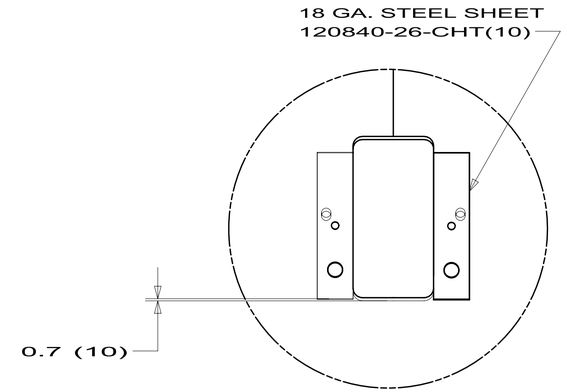


DETAIL DC

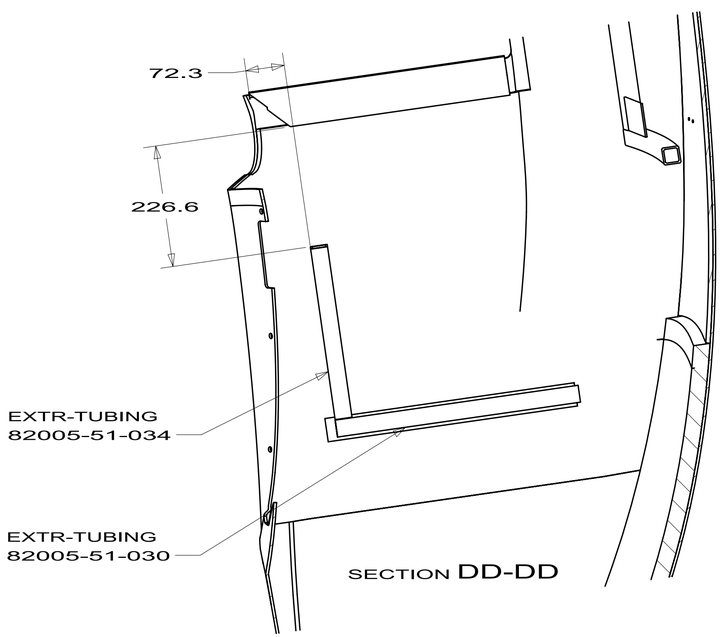


SECTION DD-DD

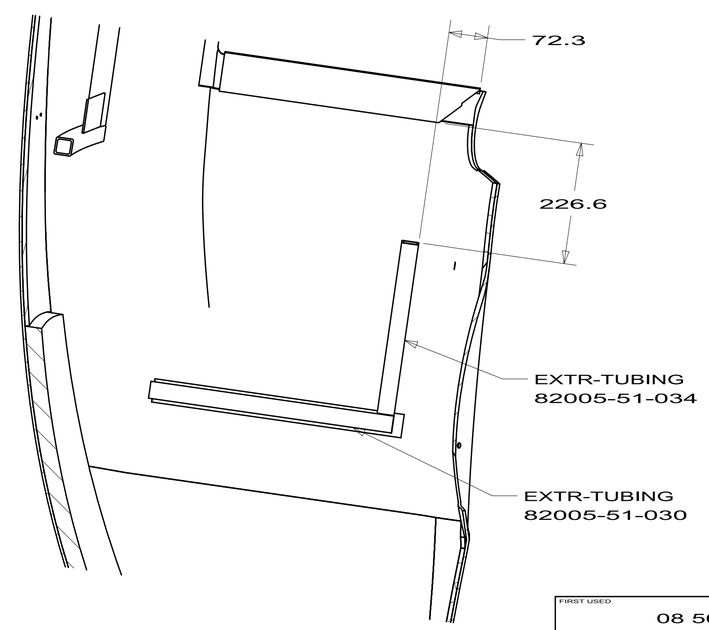


SECTION DE-DE

| | |
|---|---|
| FIRST USED | 08 500 SERIES |
| | DO NOT SCALE DRAWING |
| TITLE: | PANEL ASM-FRONT |
| SHEET 4 | PART NO 160591 REV |

| DWG NO | UNIT | SHEET |
|---|---|---|
| 170267-01 | 500S | 1,2 |
| | | |

| RELEASE | REV A | DATE | DWG NO 170267 |
|---|---|---|---|
| REV | ZONE | REVISION RECORD | DATE | DFTR-ORIG |

| KEY | PART NUMBER (27G) | PART NUMBERS (92K) | DESCRIPTION |
|---|---|---|---|
| 1 | 120700-10-26A | 120700-10-21A | DECAL-W |
| 2 | 120702-03-33A (26F)<br>120702-03-66A (27G)(92K)(26H) | | DECAL-WINNEBAGO |
| 3 | 132664-02-01A | | DECAL-LOGO DOMED WINNEBAGO |
| 4 | 151611-01-05A | | DECAL-LOGO VIEW,LG |
| 5 | 151611-02-05A | | DECAL-LOGO VIEW,SML |
| 6 | 151687-01-01A | | DECAL/BEZEL-DOMED NAMEPLATE WINNEBAGO |
| 7 | 170270-01-01A | 170270-01-02A | DECAL-FRONT OVHD W/ LOGO |
| 8 | 170271-01-01A | 170271-01-02A | DECAL-CAB DOOR, RH |
| 9 | 170271-02-01A | 170271-02-02A | DECAL-CAB DOOR, LH |
| 10 | 170272-01-01A | 170272-01-02A | DECAL-SWEEP #1, RH |
| 11 | 170272-02-01A | 170272-02-02A | DECAL-SWEEP #1, LH |
| 12 | 170273-01-01A | 170273-01-02A | DECAL-SWEEP #2, RH |
| 13 | 170273-02-01A | 170273-02-02A | DECAL-SWEEP #2, LH |
| 14 | 170274-01-01A | 170274-01-02A | DECAL-STROKE, RH |
| 15 | 170274-02-01A | 170274-02-02A | DECAL-STROKE, LH |
| 16 | 170275-01-01A | 170275-01-02A | DECAL-STROKE #2, RH |
| 17 | 170275-02-01A | 170275-02-02A | DECAL-STROKE #2, LH |
| 18 | 170276-01-01A | 170276-01-02A | DECAL-BACKWALL |
| 19 | 141599-95-000(26F) | 141599-68-000 (26H) | PAINT |
| 20 | 141599-66-000 (26F)(26H) | | PAINT |
| 21 | 170277-01-01A (26F)(26H) | | PAINT MASK-UPPER SIDEWALL, RH |
| 22 | 170277-02-01A (26F)(26H) | | PAINT MASK-UPPER SIDEWALL, LH |
| 23 | 170278-01-01A (26F)(26H) | | PAINT MASK-UPPER BACKWALL |
| 24 | 170279-01-01A (26F)(26H) | | PAINT MASK-LOWER BACKWALL |

NOTES:

11. USE FLAT EDGE OF TRIM TO ALIGN WITH FLAT EDGE OF DECAL.
10. COLORED PLASTIC AND STEEL PARTS WILL BE COLORED PRIOR TO ASSEMBLY.
9. CENTER ON UNIT.
8. LOCATE DECAL 120mm LEFT OF HOOD EDGE AND 60mm UP FROM FRONT EDGE OF HOOD.
7. VINYL DECAL WILL BE APPLIED WHERE EVER GRAPHIC DESIGN PATTERN IS POSITIONED OVER SLIDEROOM EXTRUSION, BUT WILL NOT BE APPLIED TO VINYL SCREW COVER INSERTS.
6. PAINT AREA IS TO BE BELOW FEATURE STRIP FOR OPTIONAL PAINTED MODELS AND CONTINUES ON CAB DOORS TO WHEEL WELL, INCLUDING RUNNING BOARD.
5. NO VINYL OR PAINT ON SLIDEOUT ROOM END PANELS.
4. ALL LOGOS ARE TO BE +/- 1mm ON A HORIZONTAL PLANE (END TO END).
3. CLEAR COAT 141599-27-000 TO BE APPLIED ON ALL PAINTED AREAS.
2. APPLY FILM-URETHANE PROTECTANT 109506-01-000 AT BOTTOM OF ENTRANCE DOOR TO PREVENT SCUFFMARKS.
1. APPLY PROTECTOR 116424-01-000 TO WATER HEATER DOOR LATCH.

SEE CHART
FOR COLOR VARIATIONS OF THIS PART

26H EXT GRAPHIC/PAINT-DLX PKG 2
26F EXT GRAPHIC/PAINT DLX PKG 1
92K EXTERIOR GRAPHICS PACKAGE #2
27G EXTERIOR GRAPHICS PACKAGE #1

WINNEBAGO INDUSTRIES
COPYRIGHT 2009 WINNEBAGO INDUSTRIES, INC.

DFTR | ORIG. DATE
CHKR | ALL DIMENSIONS ARE IN MILLIMETERS
P.E.
M.E. | FIRST USED
DSNR | 10 500 VIEW

UNSPECIFIED TOLERANCES ARE:
WHOLE DIM (X) : 3
ONE-PLACE (X.X) : 1.5
TWO-PLACE (X.XX) : 0.50
ANGLE : 1°

MATERIAL:

THIRD ANGLE PROJECTION

DO NOT SCALE DRAWING

TITLE: GRAPHICS INSTALLATION

SHEET 1 OF 2 | PART NO 170267 | REV

REF: 1

11/18/2009

DWG NO 170267

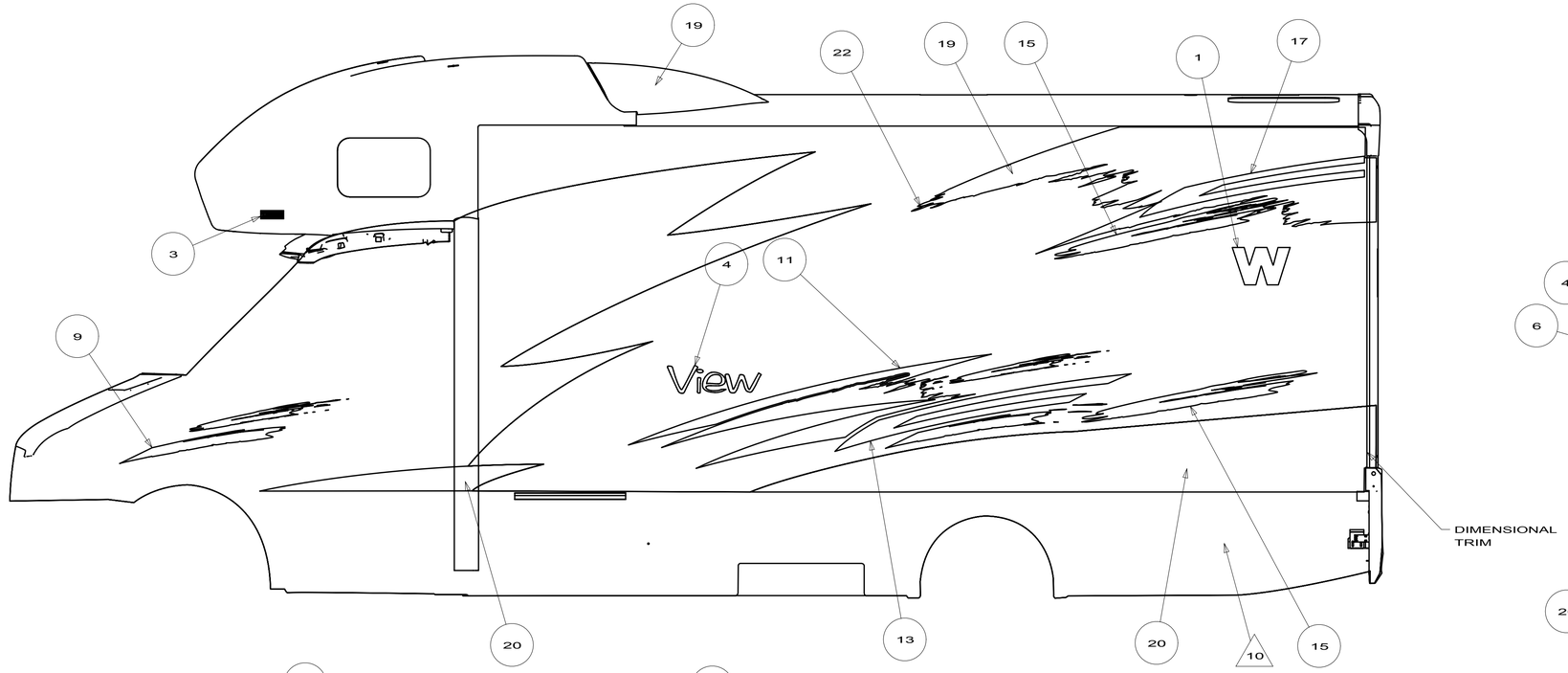


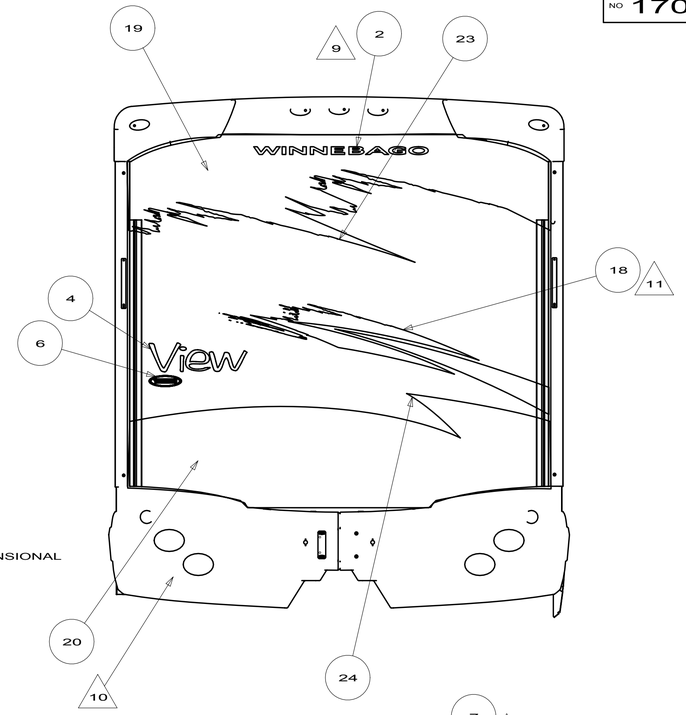


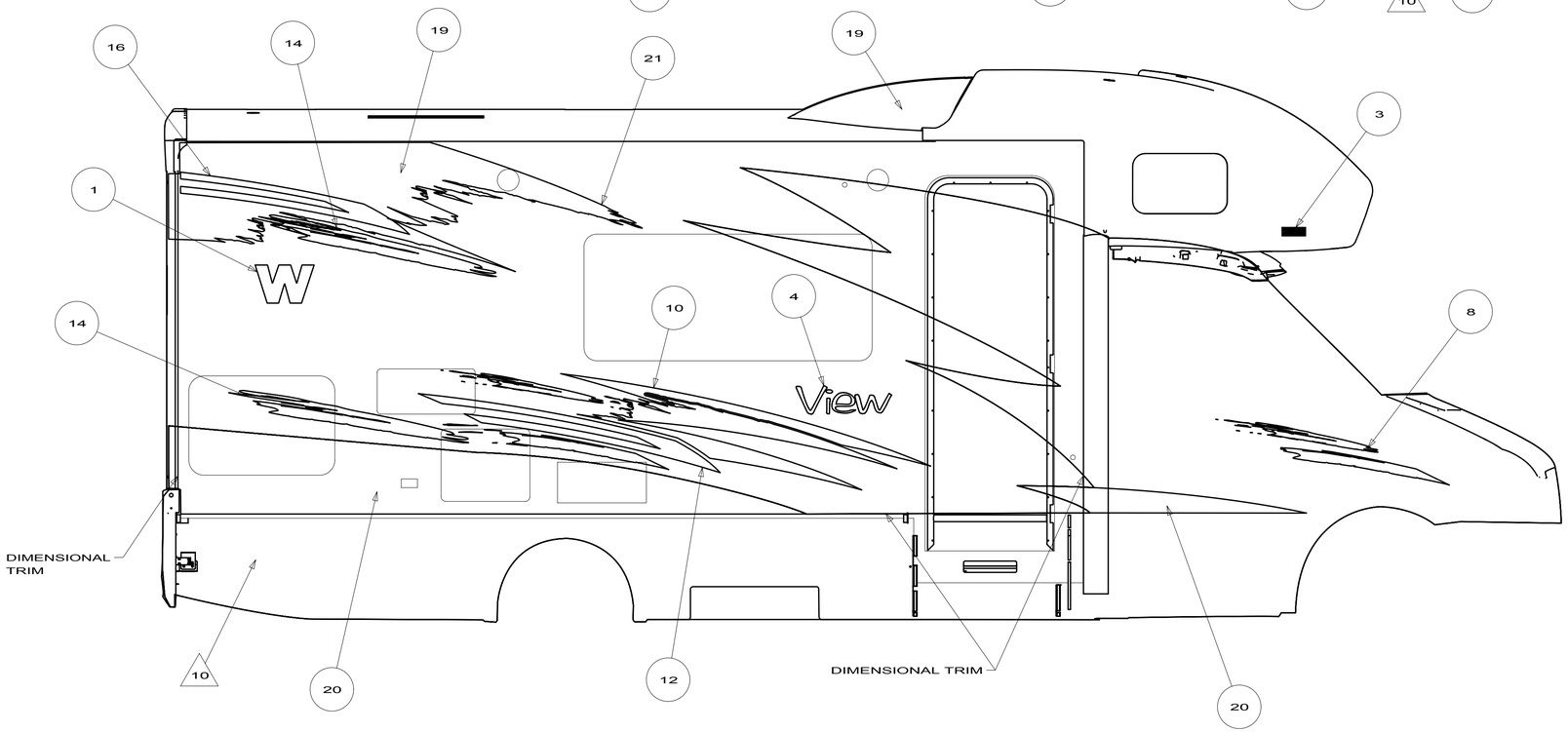


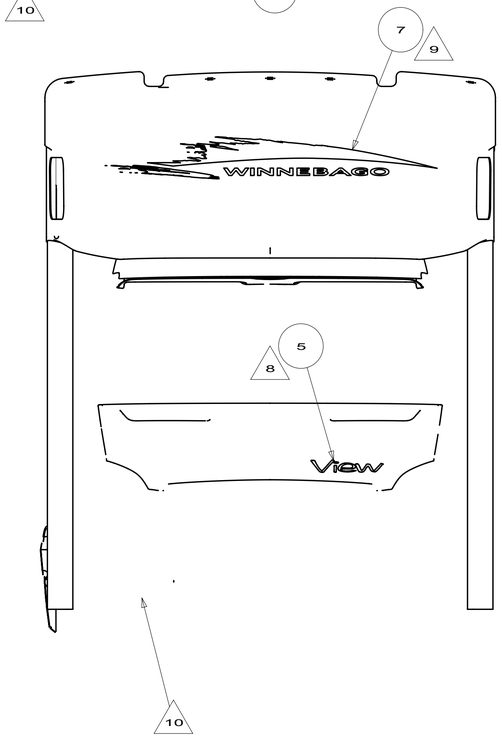


| | |
|---|---|
| FIRST USED | 10 524K (VIEW) |
| | DO NOT SCALE DRAWING |
| TITLE: | GRAPHICS INSTALLATION |
| SHEET 2 | PART NO 170267 REV |

11/18/2009

| DWG NO | UNIT |
|---|---|
| 171293-01 | 524K |
| 171293-02 | 524P |
| 171293-03 | 524A |
| 171293-04 | 524J |

| RELEASE | REV A | DATE 09--19--08 | DWG NO 171293 |
|---|---|---|---|
| REV | ZONE | REVISION RECORD | DATE / DFTR.ORIG |

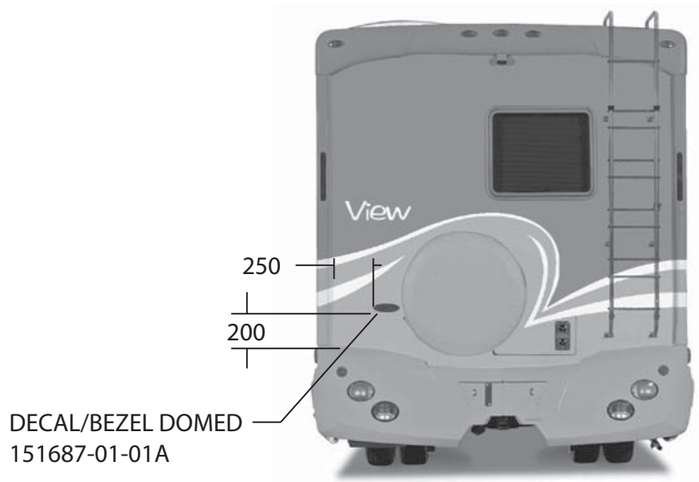

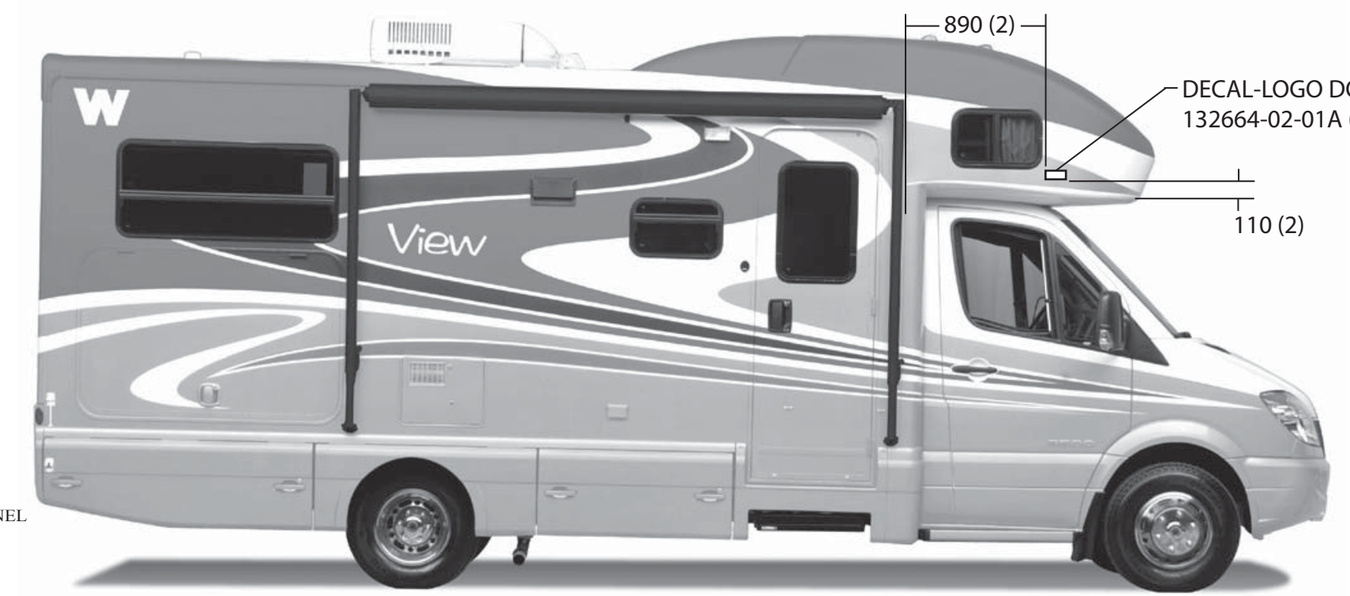


NOTES:

1. APPLY PROTECTOR 116424-01-000 TO WATER HEATER DOOR LATCH.
2. APPLY FILM-URETHANE PROTECTANT 109506-01-000 AT BOTTOM OF ENTRANCE DOOR TO PREVENT SCUFFMARKS.
3. TOLERANCE FOR DIMENSIONS IS +/-20mm.
   LOGO IS TO BE +/- 1mm ON A HORIZONTAL PLANE (END TO END).
4. CLEAR COAT TO BE APPLIED ON ENTIRE UNIT TO PROTECT PAINT.
5. USE 174664-01-000 (100 FT) TO COVER UNSEALED ROOF SEAMS.
6. APPLY SEALER BODY SEAM CLEAR 94401-04-000 TO HELP SECURE EDGES.
7. FOR ALL UNITS EXCEPT THE 524A, END PANELS OF SLIDEOUT ROOMS WILL BE PAINTED WITH BASECOAT AND CLEAR COAT ONLY. THERE WILL BE NO COLORED DESIGN GRAPHIC ELEMENTS PAINTED ON THE END PANELS.
   ON THE 524A, END PANELS WILL NOT BE PAINTED UNLESS THE UNIT HAS THE “SILVER CAB” OPTION; THEN THE END PANELS WILL NEED TO BE PRE-PAINTED SILVER.
8. PASSENGER SIDE OF UNIT SHOWN, DRIVER’S SIDE OPPOSITE.
9. DIE CUT ACRYLIC FILMS TO PROTECT PAINT. RH & LH TRANSITION PANEL AND KIT-PAINT PROTECTION.
10. LOGO IS LEFT AS BODY COLOR OR PAINTED ACCORDING TO DESIGN.
11. DO NOT PAINT VALANCE PANEL TOP HINGE, LEAVE BLACK.

(27A) EXT FULL BODY PAINT PKG #1
(92A) EXT FULL BODY PAINT PKG #2
(24C) EXT FULL BODY PAINT PKG #3
(24B) EXT FULL BODY PAINT PKG #4
(24H) EXT FULL BODY PAINT PKG #5
(24L) EXT FULL BODY PAINT PKG #6

WINNEBAGO INDUSTRIES

COPYRIGHT 2009
WINNEBAGO
INDUSTRIES, INC.

ORIG. DATE 09/17/08
FIRST USED 10 500 (VIEW)
MATERIAL:

**SPECIFICATION PRINT**
**DO NOT SCALE**

TITLE: GRAPHICS INSTL - FBP

SHEET 1 OF 3 | PART NO 171293 | REV

REF 1 08/26/09

DWG NO 171293

(27A)

LOGOS ARE CARRYOVER

## 2010 VIEW FBP - AUTUMNWOOD

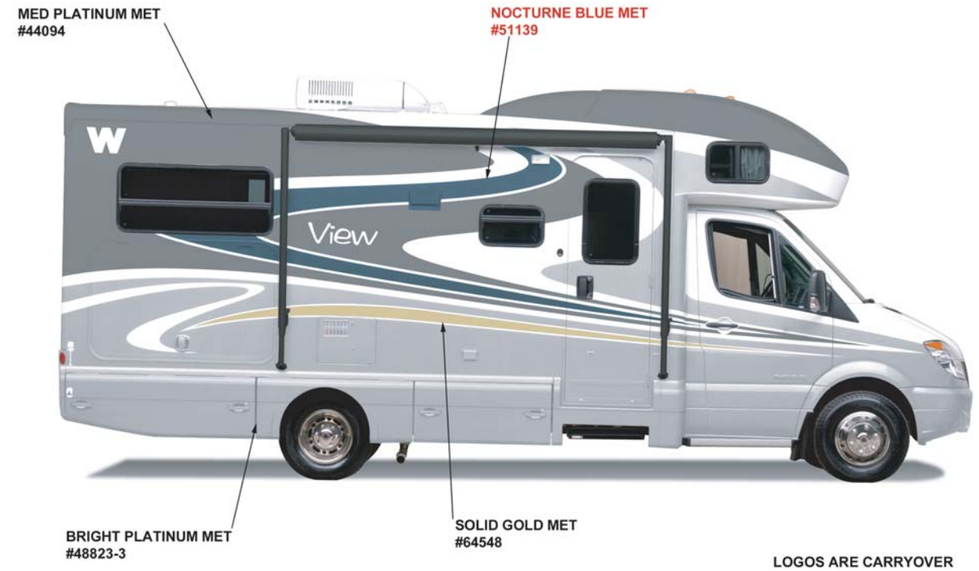


LOGOS ARE CARRYOVER

(92A)

## 2010 VIEW FBP - OPAL

REV. B 10/17/08

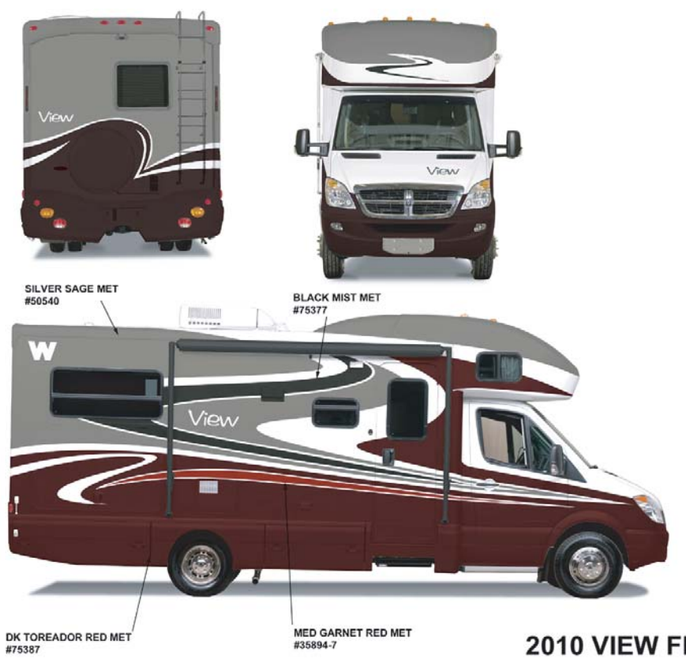


(24C)

LOGOS ARE CARRYOVER

## 2010 VIEW FBP - GARNET RED

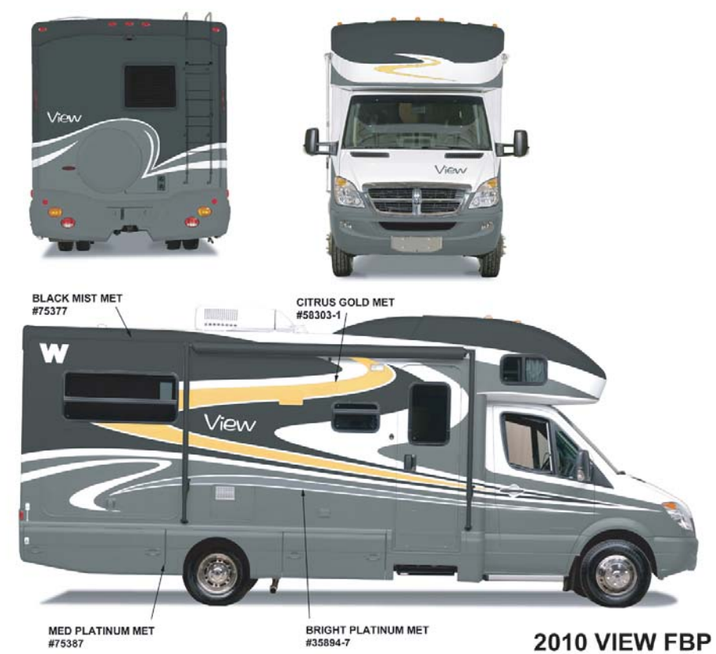


(24B)

LOGOS ARE CARRYOVER

## 2010 VIEW FBP - GOLD PLATINUM

| | |
|---|---|
| FIRST USED | 2010 500 SERIES (VIEW) |
| | SPECIFICATION PRINT DO NOT SCALE |
| TITLE: | GRAPHICS INSTL - FBP |
| SHEET 2 | PART NO 171293 REV |

DWG NO 171293

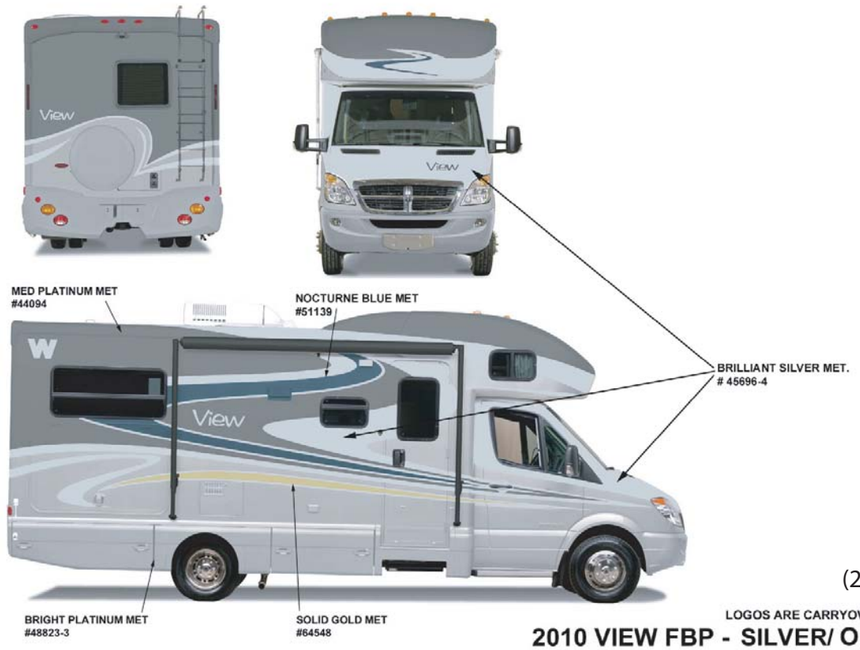


(24H)

LOGOS ARE CARRYOVER

**2010 VIEW FBP - SILVER/ OPAL**

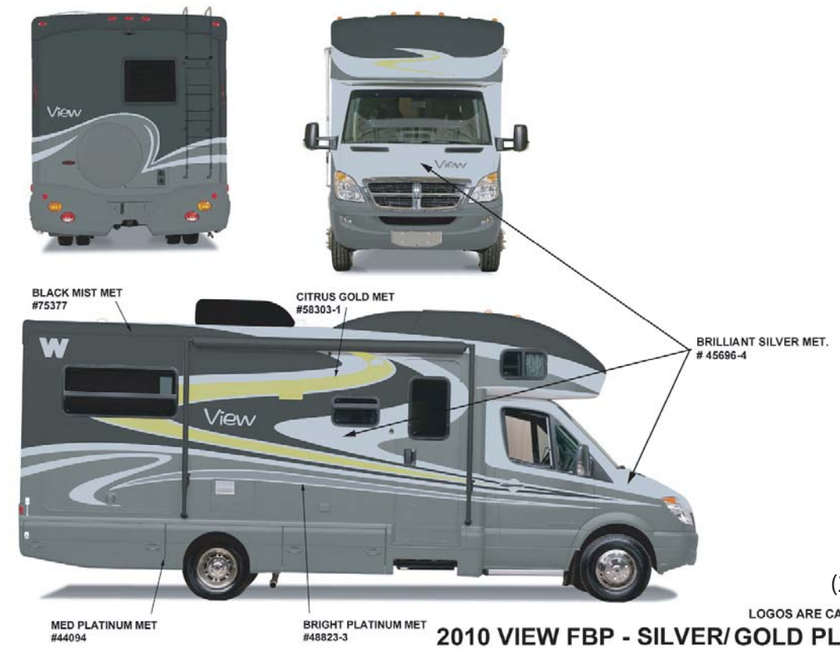


(24L)

LOGOS ARE CARRYOVER

**2010 VIEW FBP - SILVER/ GOLD PLATINUM**

| | |
|---|---|
| FIRST USED | 2010 500 SERIES (VIEW) |
| | **SPECIFICATION PRINT DO NOT SCALE** |
| TITLE | GRAPHICS INSTL - FBP |
| SHEET 3 | PART NO 171293 / REV |

| RELEASE | REV A | DATE | DWG NO 169631 |
|---|---|---|---|
| REV | ZONE | REVISION RECORD | DATE | DFTR-ORIG |

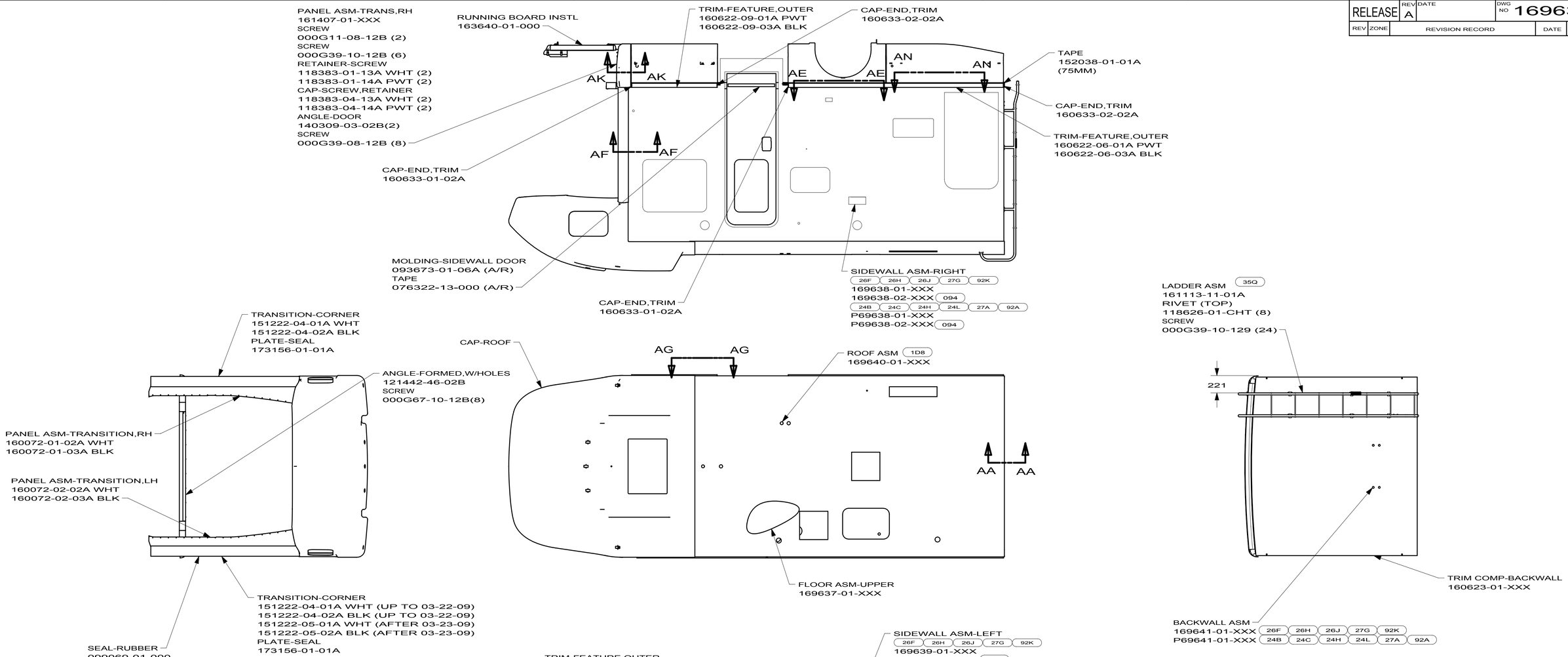


| | |
|---|---|
| 094 | WINDOWS - SE-GI |
| 35Q | LADDER-EXTERIOR |
| 1D8 | CEILING MATERIAL-SOFT |
| 935 | MUD FLAPS - REAR |

3. APPLY URETHANE ADHESIVE TO TOP OF CHASSIS FLOOR FRAME STRUCTURE PER ES0077.

2. MUDFLAPS AND/OR ROCKGUARD TO BE 40mm MIN FROM TIRES WHEN INSTALLED.

1. SEE BODY INSTL-SECTIONS 167036 FOR SECTIONS AA-AZ.

NOTES:

WINNEBAGO INDUSTRIES

COPYRIGHT 2010
WINNEBAGO
INDUSTRIES, INC.

| | |
|---|---|
| DFTR | ORIG. DATE |
| CHKR | ALL DIMENSIONS ARE IN MILLIMETERS |
| P.E. | |
| M.E. | FIRST USED |
| DSNR | 10 524P |
| UNSPECIFIED TOLERANCES ARE: WHOLE DIM (X) ± ; ONE-PLACE (X.X) ± ; TWO-PLACE (X.XX) ± ; ANGLE ± | MATERIAL: |
| THIRD ANGLE PROJECTION | |
| DO NOT SCALE DRAWING | REFER TO ES0018 FOR FASTENER TIGHTENING GUIDELINES |

TITLE: BODY INSTL-PANEL & TRIM

SHEET 1 OF 1 | PART NO 169631 | REV

REF: 1

4/28/2010

| REV | ZONE | REVISION RECORD | DATE | DFTR-ORIG |
|---|---|---|---|---|
| | | REV DATE | DWG NO 140923 | |

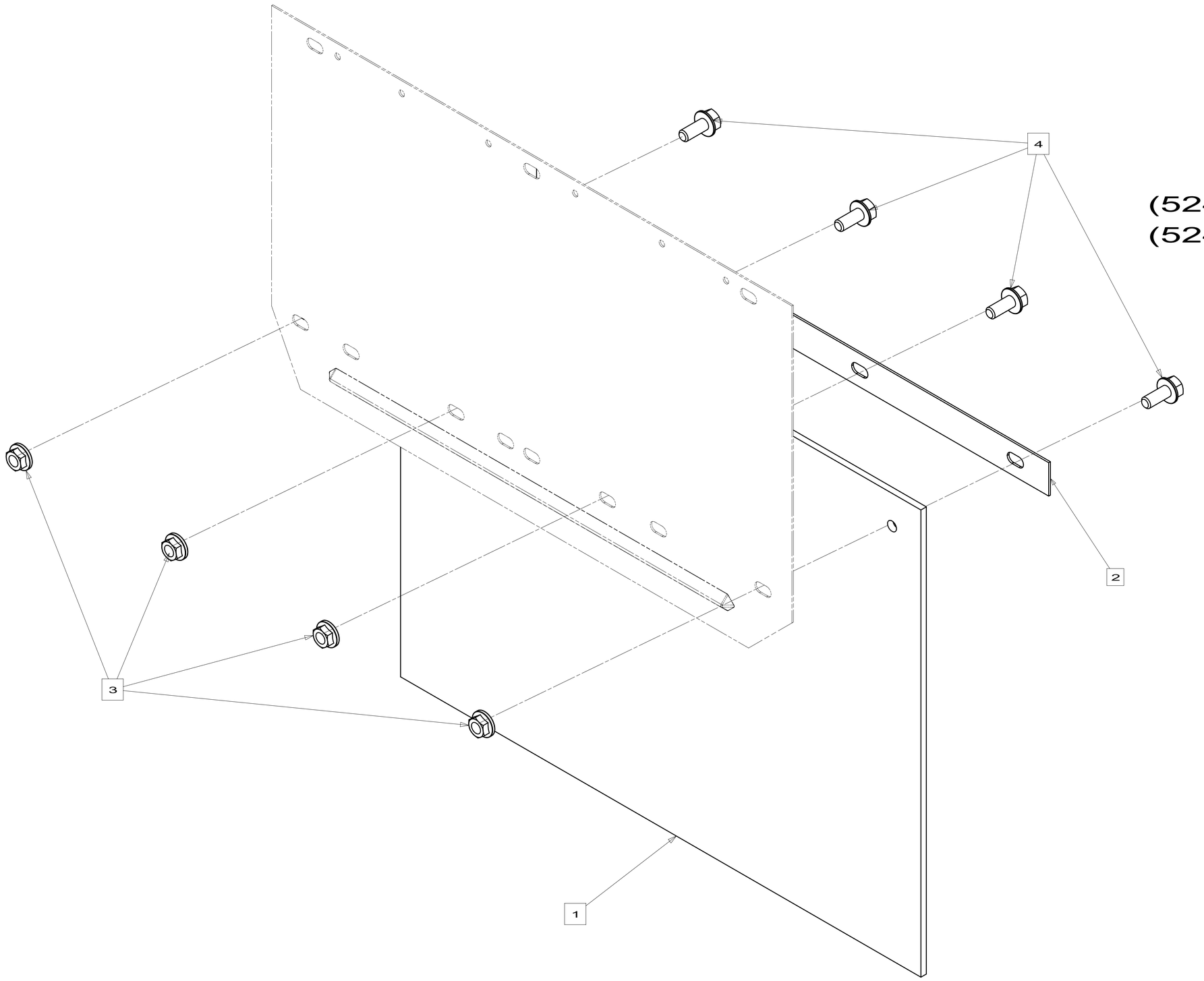


# 140923-01
# 331C
# 500-SERIES
# (524A PASSENGER)
# (524K PASSENGER)
# 700-SERIES
# D-SERIES
# E-SERIES
# H SERIES
# J SERIES

| ITEM | PART NUMBER | DESCRIPTION | QTY |
|---|---|---|---|
| 4 | 000C260512U | BOLT | 4 |
| 3 | 000D390500U | NUT | 4 |
| 2 | 14092201CHT | PLATE-MUDFLAP | 1 |
| 1 | 01751601000 | MUD FLAP-BLACK | 1 |

WINNEBAGO INDUSTRIES

COPYRIGHT 2010
WINNEBAGO
INDUSTRIES, INC.

DFTR | ORIG. DATE
CHKR
P.E.
M.E.
DSNR

ALL DIMENSIONS ARE IN MILLIMETERS

FIRST USED
02 MOTORHOMES

UNSPECIFIED TOLERANCES ARE:
WHOLE DIM (X) ±
ONE-PLACE (X.X) ±
TWO-PLACE (X.XX) ±
ANGLE ±

MATERIAL:

THIRD ANGLE PROJECTION

DO NOT SCALE DRAWING

TITLE:
MUD FLAP COMPL

SHEET 1 OF 5 | PART NO 140923 | REV

REF: 1

2/16/2010

| RELEASE | REV A | DATE | DWG NO 160623 |
|---|---|---|---|

| REV | ZONE | REVISION RECORD | DATE | DFTR-ORIG |
|---|---|---|---|---|

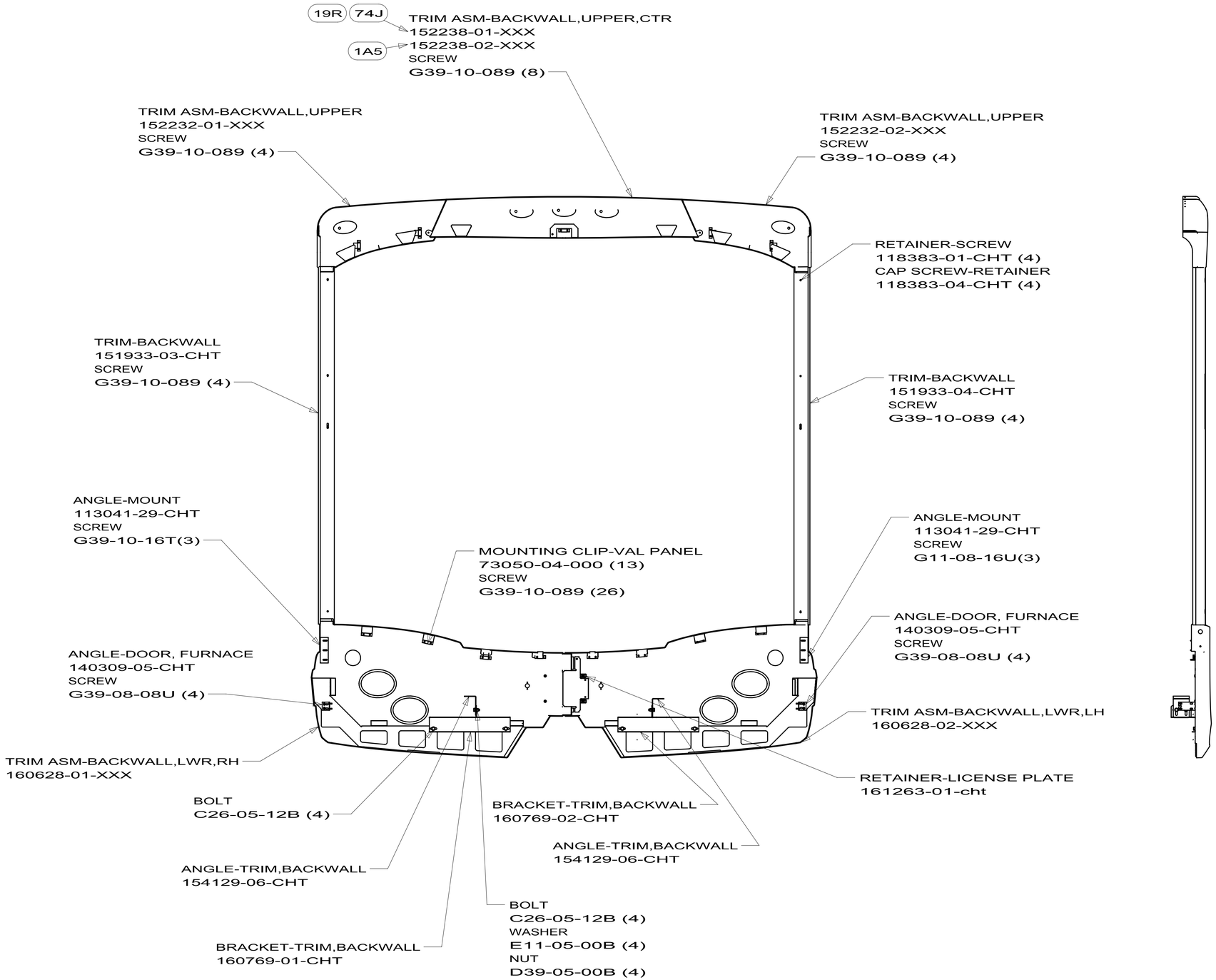


19R RADIO/REARVIEW MONITOR SYSTEM
74J REARVIEW MONITOR SYS W/AUDIO
1A5 REARVIEW MONITOR SYSTEM W/O

NOTES:

1. REMOVE ALL BURRS AND SHARP EDGES.

WINNEBAGO INDUSTRIES

COPYRIGHT 2009
WINNEBAGO
INDUSTRIES, INC.

| | |
|---|---|
| DFTR | ORIG. DATE |
| CHKR | ALL DIMENSIONS ARE IN MILLIMETERS |
| P.E. | |
| M.E. | FIRST USED |
| DSNR | 08 500-SER |

UNSPECIFIED TOLERANCES ARE:
WHOLE DIM (X) : 3
ONE-PLACE (X.X) : 1.5
TWO-PLACE (X.XX) : 0.50
ANGLE : 1°

MATERIAL:

THIRD ANGLE PROJECTION

DO NOT SCALE DRAWING

TITLE:
TRIM COMPL-BACKWALL

SHEET 1 OF 2 | PART NO 160623 | REV

REF:

DWG NO 160623

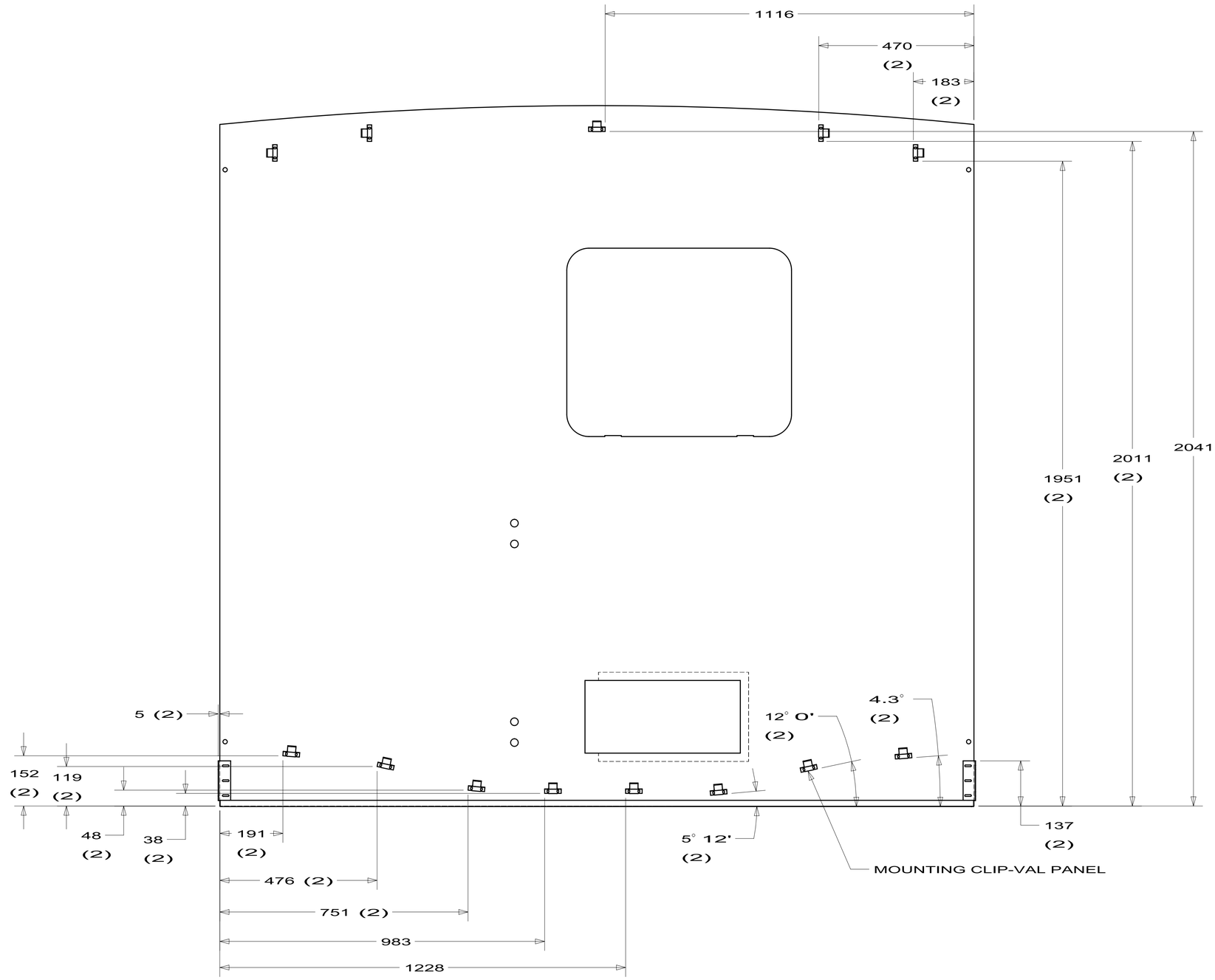


OUTSIDE VIEW

| | |
|---|---|
| FIRST USED | 08 500-SER |
| | DO NOT SCALE DRAWING |
| TITLE: | TRIM COMPL-BACKWALL |
| SHEET 2 | PART NO 160623 REV |

| DWG NO | SHEET | |
|---|---|---|
| 163640-01 | 1 | 524A,J,K,P |
| 163640-02 | 2 | 524DL |

| RELEASE | REV A | DATE | DWG NO 163640 |
|---|---|---|---|
| REV | ZONE | REVISION RECORD | DATE / DFTR-ORIG |

# 524A,J,K,P
# 163640-01

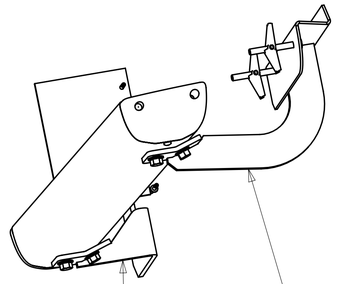

TAPE-ANTI SLIP
038327-01-000
(340MM) △6

TAPE-ANTI SLIP
038327-01-000
(125MM) △6

VIEW E
(RH SHOWN)
(LH OPPOSITE)

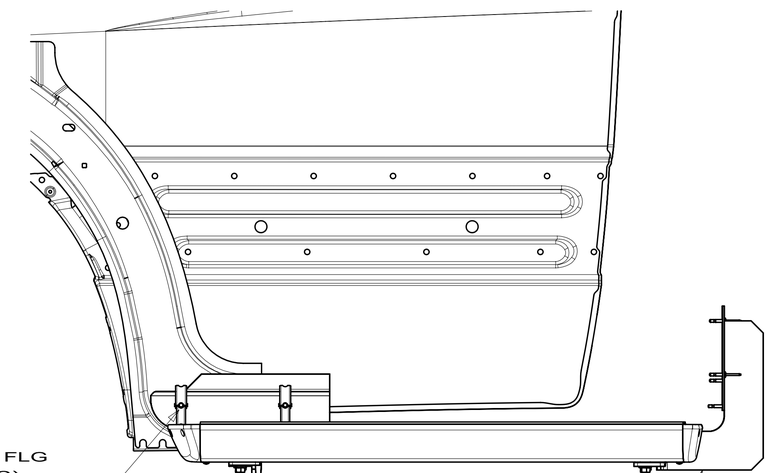

△1 △2 △3
BOLT-HEX-SER FLG
C26-05-40B (2)
WING-TOGGLE
163691-01-01A (2)

BOLT-HEX-SER FLG
C26-06-16T (2)

BRACKET ASM-STEP,CAB,FRT
172267-01-04B (RH)
172267-02-04B (LH)

BOLT-HEX-SER FLG
C26-06-16T (2)

BRACKET ASM-STEP,CAB,RR
172271-01-04B (RH)
172271-02-01B (LH)

VIEW A
(RH SHOWN)
(LH OPPOSITE)

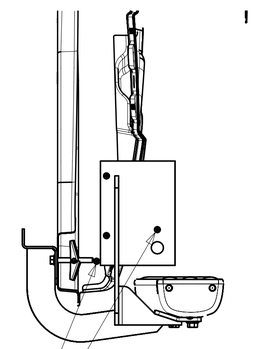

△4
RIVET-MONOBOLT,3/16
163664-01-01A
(8 TOTAL)

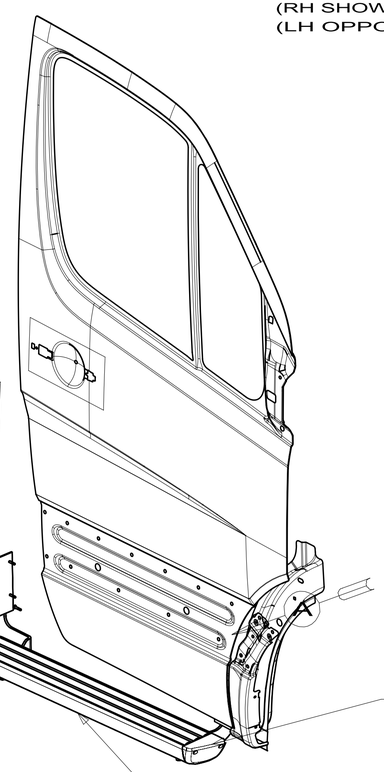

CAP-END,STEP,CAB,REAR,BLK
163254-03-01A

CAP-END,STEP,CAB,RH,FRT,BLK
163254-01-01A
CAP-END,STEP,CAB,LH,FRT,BLK
163254-02-01A

B

E

STEP ASM-ENTRY,CAB
163241-01-02A
TREAD-STEP,ENTRY,CAB
163252-01-01A

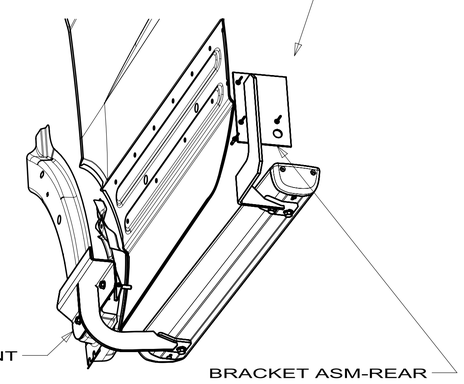

WINGWALL

BRACKET ASM-FRONT

BRACKET ASM-REAR

VIEW B
(RH SHOWN)
(LH OPPOSITE)

△6. APPLY TAPE TO FORWARD FACING SURFACE.

△5. TORQUE TO 9 FT-LBS.

△4. RIVET HOLES TO BE ∅4.85 - 5.11.

△3. TORQUE TO 13 FT-LBS.

△2. APPLY UNDERCOATING 100053-04-000 TO EDGES OF ENLARGED HOLES BEFORE BRACKET INSTALLATION. ALSO APPLY TO BOLT HEADS AFTER INSTALLATION.

△1. ∅20.0 MM HOLES IN CAB TO BE ENLARGED TO ∅22.2 MM (4 PLACES).

NOTES:

WINNEBAGO INDUSTRIES

COPYRIGHT 2009
WINNEBAGO
INDUSTRIES, INC.

| | |
|---|---|
| DFTR | ORIG. DATE |
| CHKR | ALL DIMENSIONS ARE IN MILLIMETERS |
| P.E. | |
| M.E. | FIRST USED |
| DSNR | 08 500-SERIES |

UNSPECIFIED TOLERANCES ARE:
WHOLE DIM (X) : 3
ONE-PLACE (X.X) : 1.5
TWO-PLACE (X.XX) : 0.50
ANGLE : 1°

MATERIAL:

THIRD ANGLE PROJECTION

DO NOT SCALE DRAWING

TITLE:
RUNNING BOARD INSTL

SHEET 1 OF 2 | PART NO 163640 | REV

REF:

11/14/2009

DWG NO 163640

# 524DL
# 163640-02

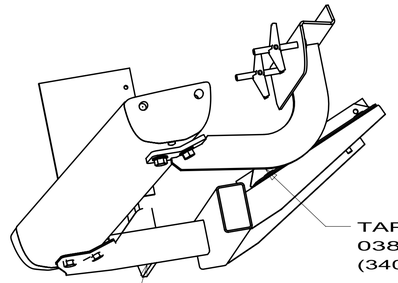

TAPE-ANTI SLIP
038327-01-000
(340MM) 6

TAPE-ANTI SLIP
038327-01-000
(200MM) 6

VIEW F
(RH SHOWN)
(LH OPPOSITE)

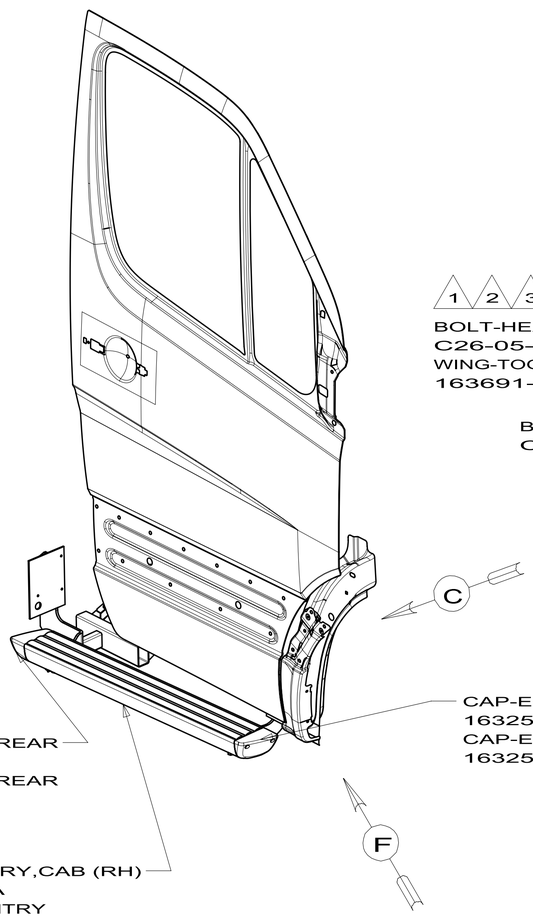

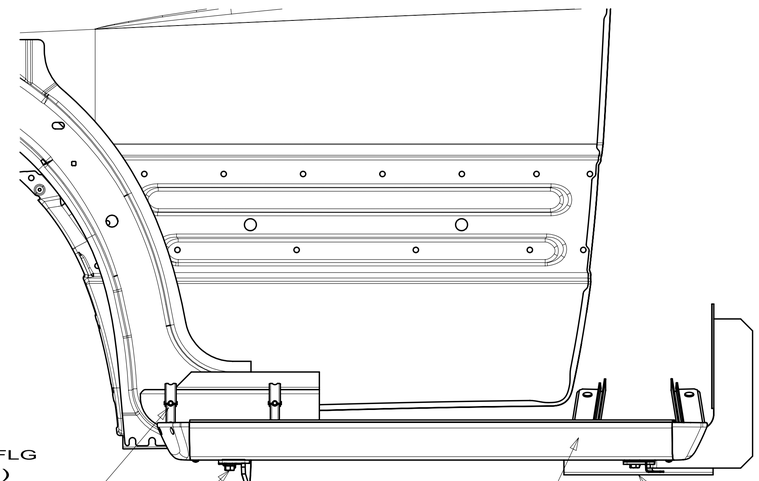

1 2 3
BOLT-HEX-SER FLG
C26-05-40B (2)
WING-TOGGLE
163691-01-01A (2)

BOLT-HEX-SER FLG
C26-06-16T (2)

5 NUT
D39-04-00U (4)

BRACKET ASM-STEP,CAB,FRT
172267-01-04B (RH)
172267-02-04B (LH)

BRACKET ASM-STEP,CAB
164697-01-04B (RH)
164697-02-04B (LH)

VIEW C
(RH SHOWN)
(LH OPPOSITE)

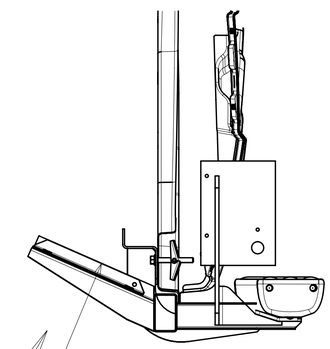

D

CLAMP ASM-CAB,STEP,REAR
164698-02-02B
(4 TOTAL)

C

CAP-END,STEP,CAB,RH,FRT/REAR
163254-01-01A
CAP-END,STEP,CAB,LH,FRT/REAR
163254-02-01A

CAP-END,STEP,CAB,RH,FRT/REAR
163254-01-01A
CAP-END,STEP,CAB,LH,FRT/REAR
163254-02-01A

F

STEP ASM-ENTRY,CAB (RH)
163241-01-02A
TREAD-STEP,ENTRY
163252-01-01A

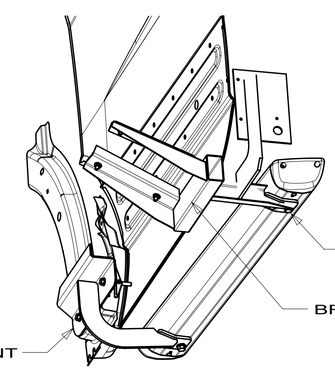

BOLT-HEX-SER FLG
C26-06-16T (2)

BRACKET ASM-REAR

BRACKET ASM-FRONT

VIEW D
(RH SHOWN)
(LH OPPOSITE)

| | |
|---|---|
| FIRST USED | 08 500-SERIES |
| | DO NOT SCALE DRAWING |
| TITLE: | RUNNING BOARD INSTL |
| SHEET 2 | PART NO 163640 REV |

11/14/2009

| RELEASE | REV A | DATE | DWG NO 169641 |
|---|---|---|---|

| REV | ZONE | REVISION RECORD | DATE | DFTR-ORIG |
|---|---|---|---|---|

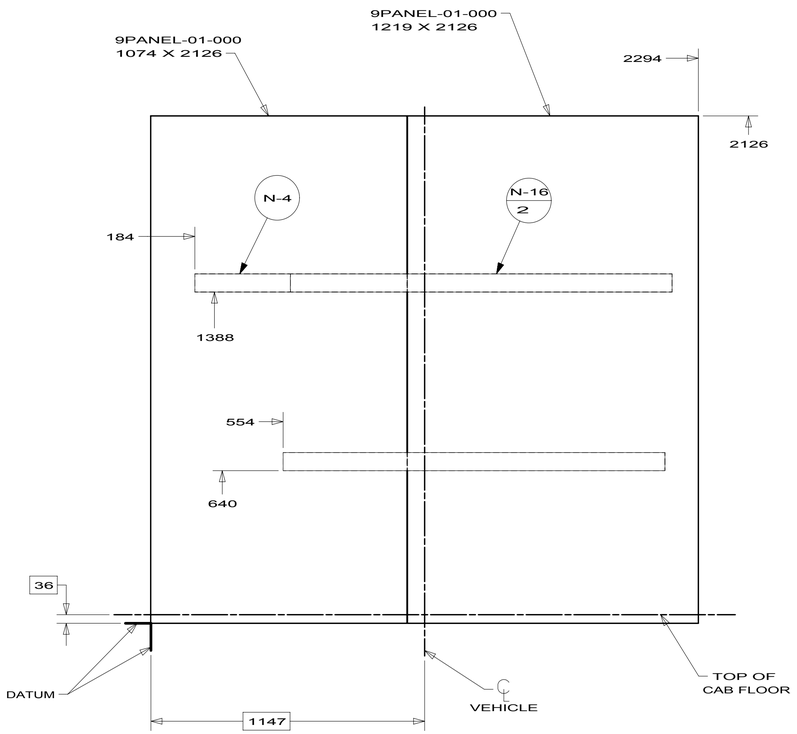


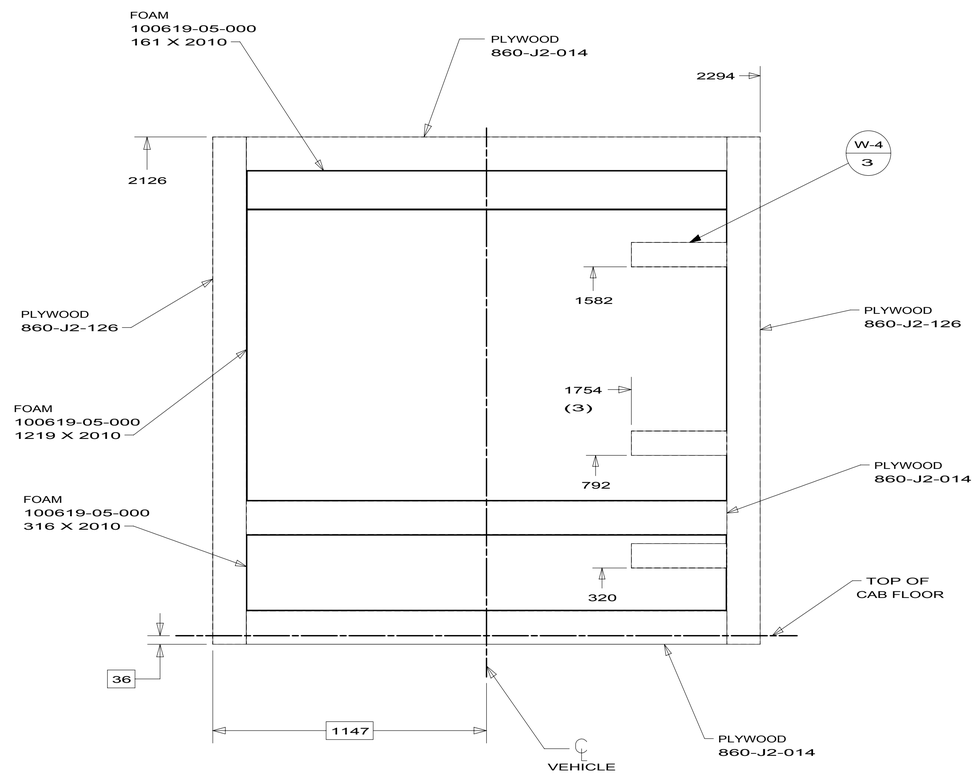

3. TOLERANCE FOR LAYUP ±2.5, STEEL ±6.0.

2. SEE ES0064 FOR ADHESIVES.

1. PANEL SHOWN FROM EXTERIOR SIDE.

NOTES:

| X-X | FOR STEEL CALLOUTS SEE DWG NO. 114074-01-000 |
|---|---|

**NOTICE**

CHANGES TO THIS SHEET MAY AFFECT OTHERS

COPYRIGHT 2010
WINNEBAGO
INDUSTRIES, INC.

| | |
|---|---|
| DFTR | ORIG. DATE |
| CHKR | ALL DIMENSIONS ARE IN MILLIMETERS |
| P.E. | |
| M.E. | FIRST USED |
| DSNR | 10 524P |
| UNSPECIFIED TOLERANCES ARE: WHOLE DIM (X) ± ; ONE-PLACE (X.X) ± ; TWO-PLACE (X.XX) ± ; ANGLE ± ; 3 | MATERIAL: |
| THIRD ANGLE PROJECTION | |
| DO NOT SCALE DRAWING | REFER TO ES0018 FOR FASTENER TIGHTENING GUIDELINES |
| TITLE: BACKWALL ASM | |
| SHEET 1 OF 2 | PART NO 169641 REV |

REF: 1

4/27/2010

DWG NO 169641

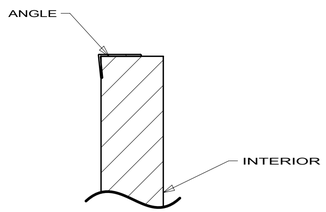


SECTION BA-BA

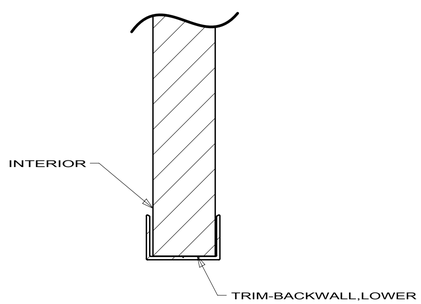


SECTION BB-BB

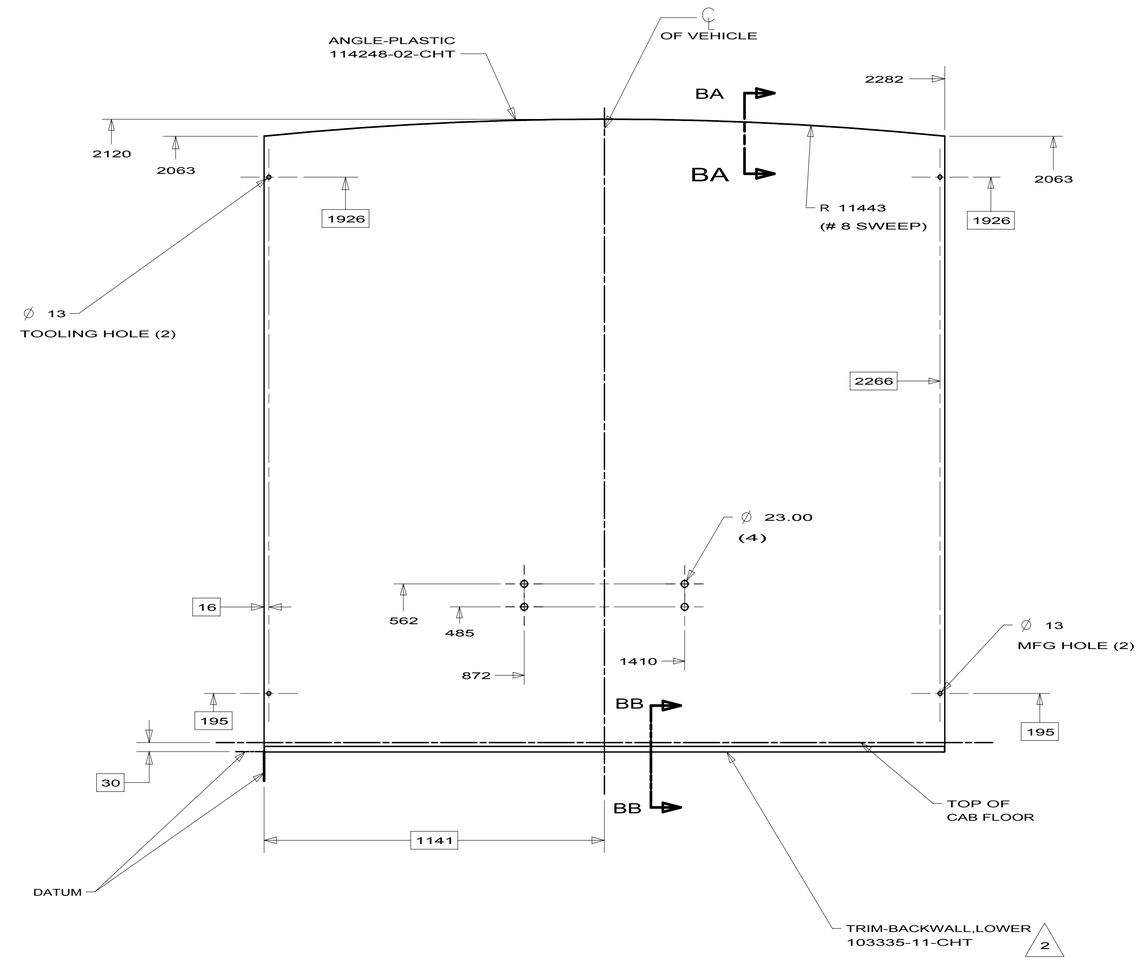


3. TOLERANCE FOR CUTOUT ±2.5,

2. CAP SEAL TRIM WITH SEALANT 72889-20-000.

1. PANEL SHOWN FROM EXTERIOR SIDE.

NOTES:

NOTICE

CHANGES TO THIS SHEET
MAY AFFECT OTHERS

| | |
|---|---|
| FIRST USED | 10 524P |
| | DO NOT SCALE DRAWING |
| TITLE: | BACKWALL ASM |
| SHEET 2 | PART NO 169641 REV |

4/27/2010

| DWG NO | ROOM ASM-SLIDEOUT | SLUG ASM-SLIDEOUT |
|---|---|---|
| 169642-01 | 169642-11-XXX | 169639-11-XXX |
| 169642-02 | 169642-12-XXX | 169639-12-XXX |

094

| RELEASE | REV A | DATE | DWG NO 169642 |
|---|---|---|---|

| REV | ZONE | REVISION RECORD | DATE | DFTR-ORIG |
|---|---|---|---|---|

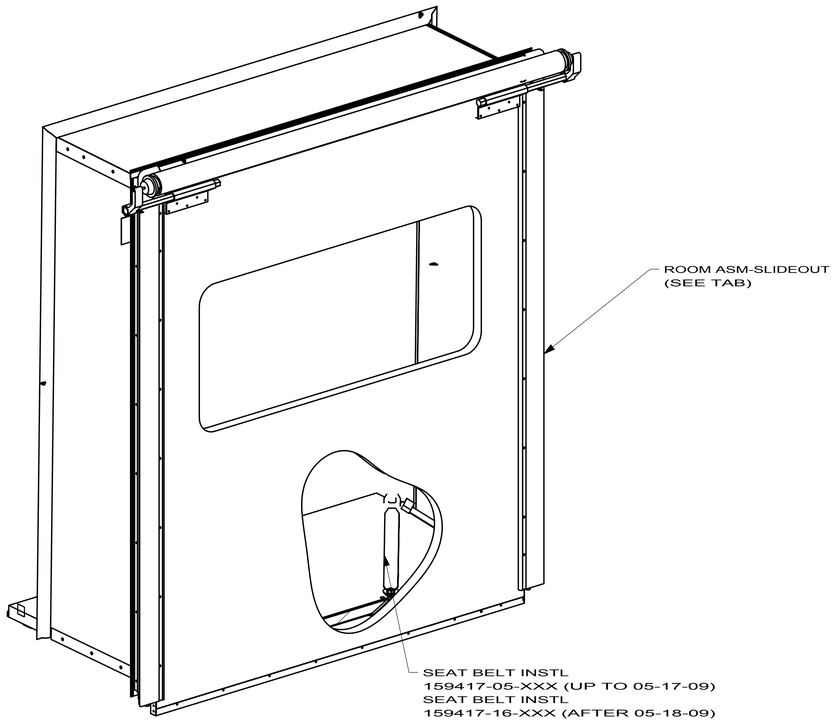


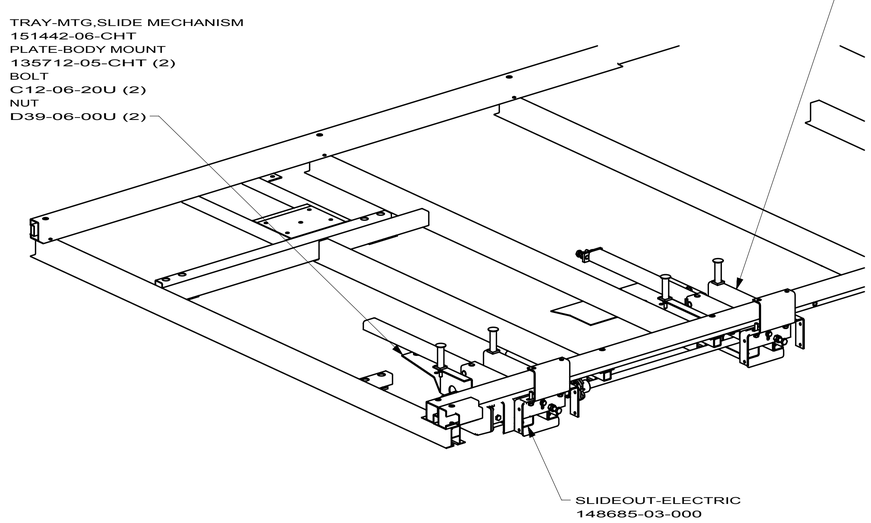


18. SECURE ONE OF THE SLIDEOUT ROOM ACTIVATION KEYS TO THE ROD-LOCK STRAP. KEYS ARE INCLUDED WITH SWITCH ASSEMBLY P/N 163097(REF).

17. REPLACES STOP BOLT THAT COMES WITH RAM.

16. USE SCREW G39-10-12T TO HOLD PANEL EDGES.

15. FOR MANUAL CYCLE ROOF LIFT LEVER TO UP POSITION AND TURN STUD.

14. ANTI-BILLOW BRACKET TO BE INSTALLED ON REAR SIDE OF SLIDE ROOM AT 11:00 POSITION. THE SIDEWALL BLOCK IS NOT USED.

13. TORQUE TO 41 FT-lbs.

12. TORQUE ALL BOLTS PER ES0018 UNLESS OTHERWISE SPECIFIED. (SEE TABLE BELOW)

| SIZE | TORQUE VALUE (FT-LBS) |
|---|---|
| 1/4 - 20 (.250) | 76 (IN-LBS) |
| 5/16 - 18 (.3125) | 13 (FT-LBS) |
| 3/8 - 16 (.375) | 23 (FT-LBS) |
| 7/16 - 14 (.4375) | 37 (FT-LBS) |
| 1/2 - 13 (.500) | 57 (FT-LBS) |

11. USE POLY-CLEAR 47034-07-000 AND ATTACH IT USING WASHER 44533-01-000 TO PROTECT THE SLIDEOUT FLOOR.

10. POSITION SEAL FLUSH WITH LOWER TRIM AND TIGHT AGAINST INNER TRIM.

9. SCREWS CANNOT BE REUSED. ANY TIME A SCREW IS REMOVED IT MUST BE DISCARDED AND REPLACED WITH A NEW SCREW TO INSURE THE THREADS SEAL.

8. USE SCREW G39-08-08S TO HOLD EACH END OF TRIM.

7. SEE SEALANT MANUAL.

6. LOOSEN BOLTS TO ALLOW ROOM TO MOVE SIDE TO SIDE ON THE MOUNTING BRACKETS UNTIL IT IS CENTERED IN THE OPENING. TIGHTEN AFTER ALL ADJUSTMENTS ARE COMPLETE.

5. LOOSEN JAM NUTS AND ADJUST BOLT TO MOVE ROOM UP OR DOWN TO BE CENTERED IN THE SIDEWALL OPENING. TIGHTEN AFTER ALL ADJUSTMENTS ARE COMPLETE.

4. THIS IS A NOMINAL DIMENSION; THE PARTS SHOULD BE ADJUSTED AS REQUIRED FROM THERE.

3. THE RETRACTED LENGTH IS ADJUSTED BY THREADING THE STOP BOLT IN OR OUT UNTIL THE OUTSIDE WALL OF THE ROOM SEALS AGAINST THE SIDEWALL.

2. THE EXTENDED LENGTH IS ADJUSTED BY TURNING THE LOCK NUTS ON THE PISTON RODS IN OR OUT UNTIL THE SLIDEOUT ROOM SEALS AGAINST THE SIDEWALL.

1. FOR ADDITIONAL INFORMATION SEE WIRE INSTALLATION FRONT END AND THE LEVELING JACK INSTALLATION DRAWINGS.

NOTES:

094 WINDOWS - SE-GI

WINNEBAGO INDUSTRIES

COPYRIGHT 2010
WINNEBAGO
INDUSTRIES, INC.

| | |
|---|---|
| DFTR | ORIG. DATE |
| CHKR | ALL DIMENSIONS ARE IN MILLIMETERS |
| P.E. | |
| M.E. | FIRST USED |
| DSNR | 10 524P |
| UNSPECIFIED TOLERANCES ARE: WHOLE DIM (X) : ; ONE-PLACE (X.X) : 1.5 ; TWO-PLACE (X.XX) : ; ANGLE : | MATERIAL: |
| THIRD ANGLE PROJECTION | |
| DO NOT SCALE DRAWING | REFER TO ES0018 FOR FASTENER TIGHTENING GUIDELINES |

TITLE: SLIDEOUT COMPL-FRT,LH

| SHEET 1 OF 4 | PART NO 169642 | REV |
|---|---|---|

REF: 1

4/27/2010

DWG NO 169642

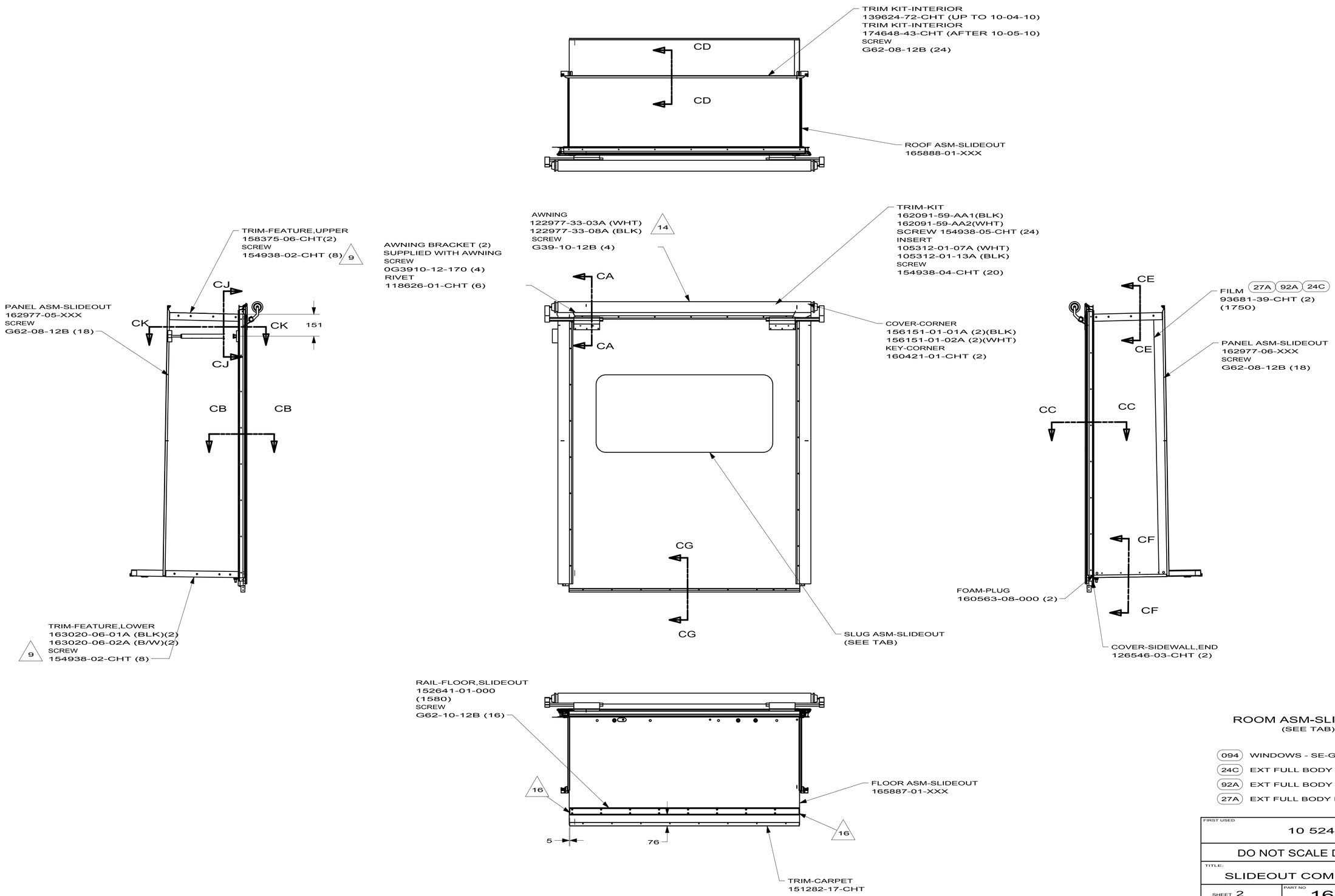


ROOM ASM-SLIDEOUT
(SEE TAB)

| | |
|---|---|
| 094 | WINDOWS - SE-GI |
| 24C | EXT FULL BODY PAINT PKG # 3 |
| 92A | EXT FULL BODY PAINT PKG # 2 |
| 27A | EXT FULL BODY PAINT PKG #1 |

FIRST USED
10 524P

DO NOT SCALE DRAWING

TITLE:
SLIDEOUT COMPL-FRT,LH

SHEET 2 | PART NO 169642 | REV

4/27/2010

DWG NO 169642

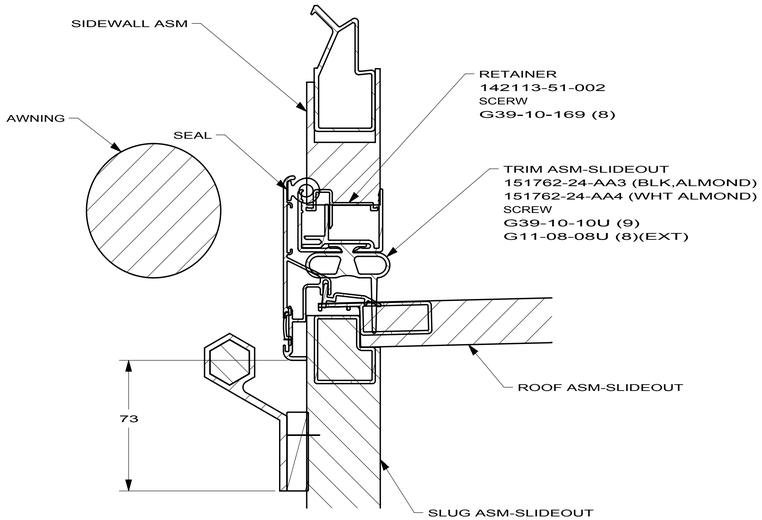


SECTION CA-CA

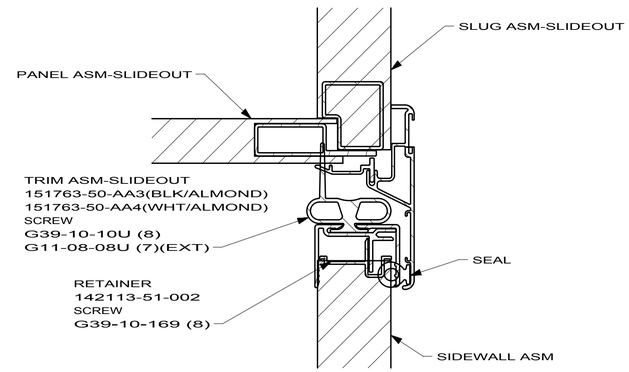


SECTION CB-CB

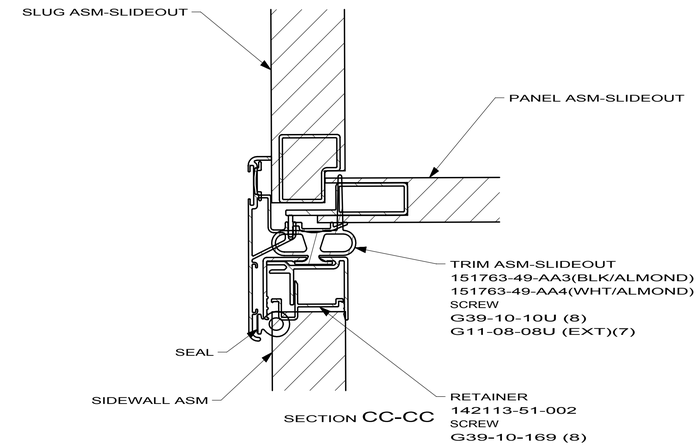


SECTION CC-CC

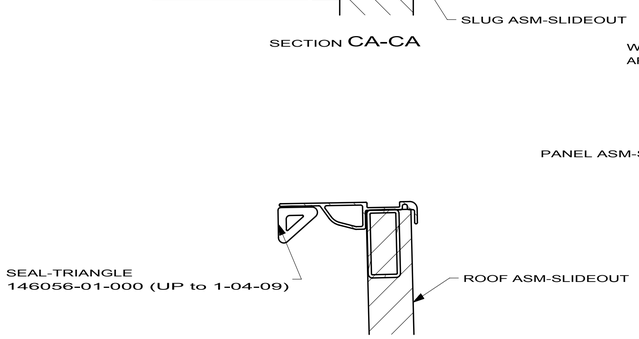


SECTION CD-CD

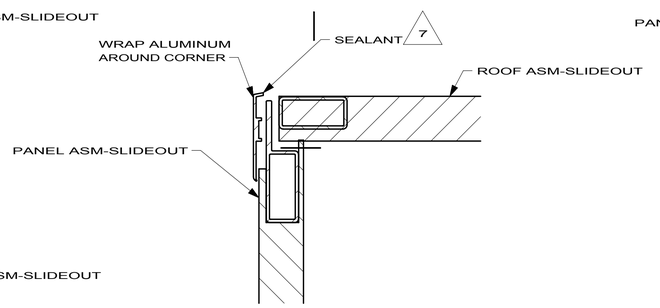


SECTION CE-CE

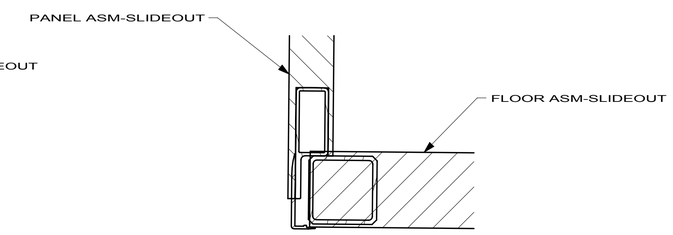


SECTION CF-CF

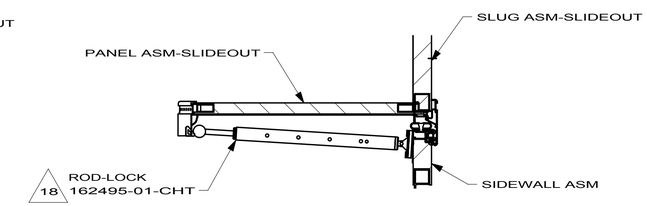


SECTION CK-CK

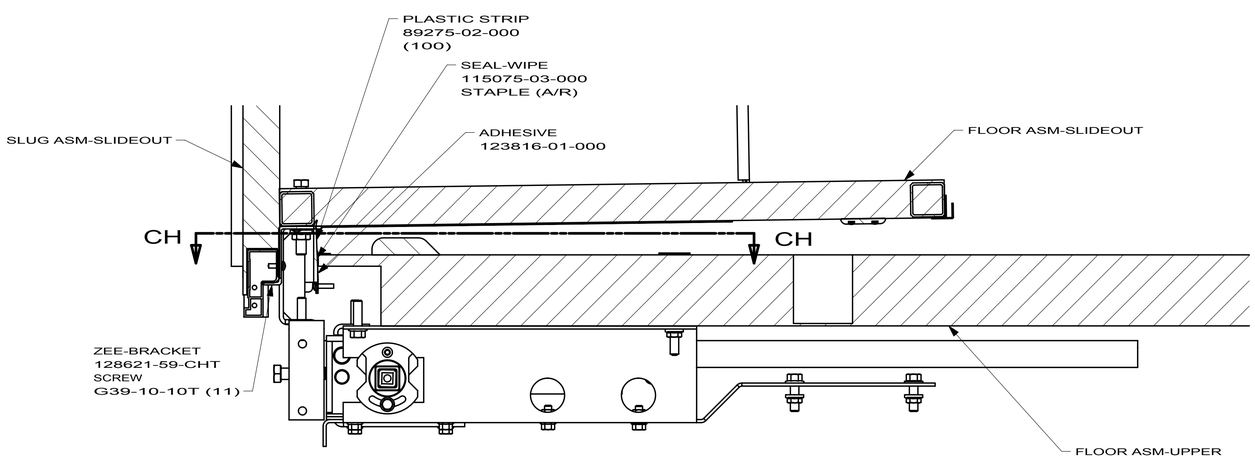


SECTION CG-CG

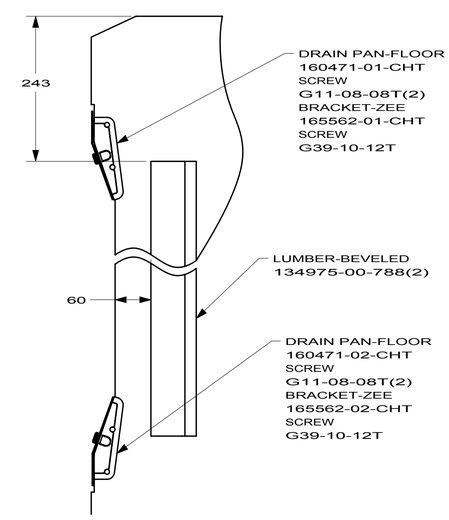


SECTION CH-CH

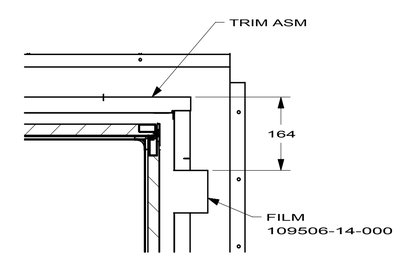


SECTION CJ-CJ

| | | |
|---|---|---|
| FIRST USED 10 524P | | |
| DO NOT SCALE DRAWING | | |
| TITLE: SLIDEOUT COMPL-FRT,LH | | |
| SHEET 3 | PART NO 169642 | REV |

4/27/2010

DWG NO 169642

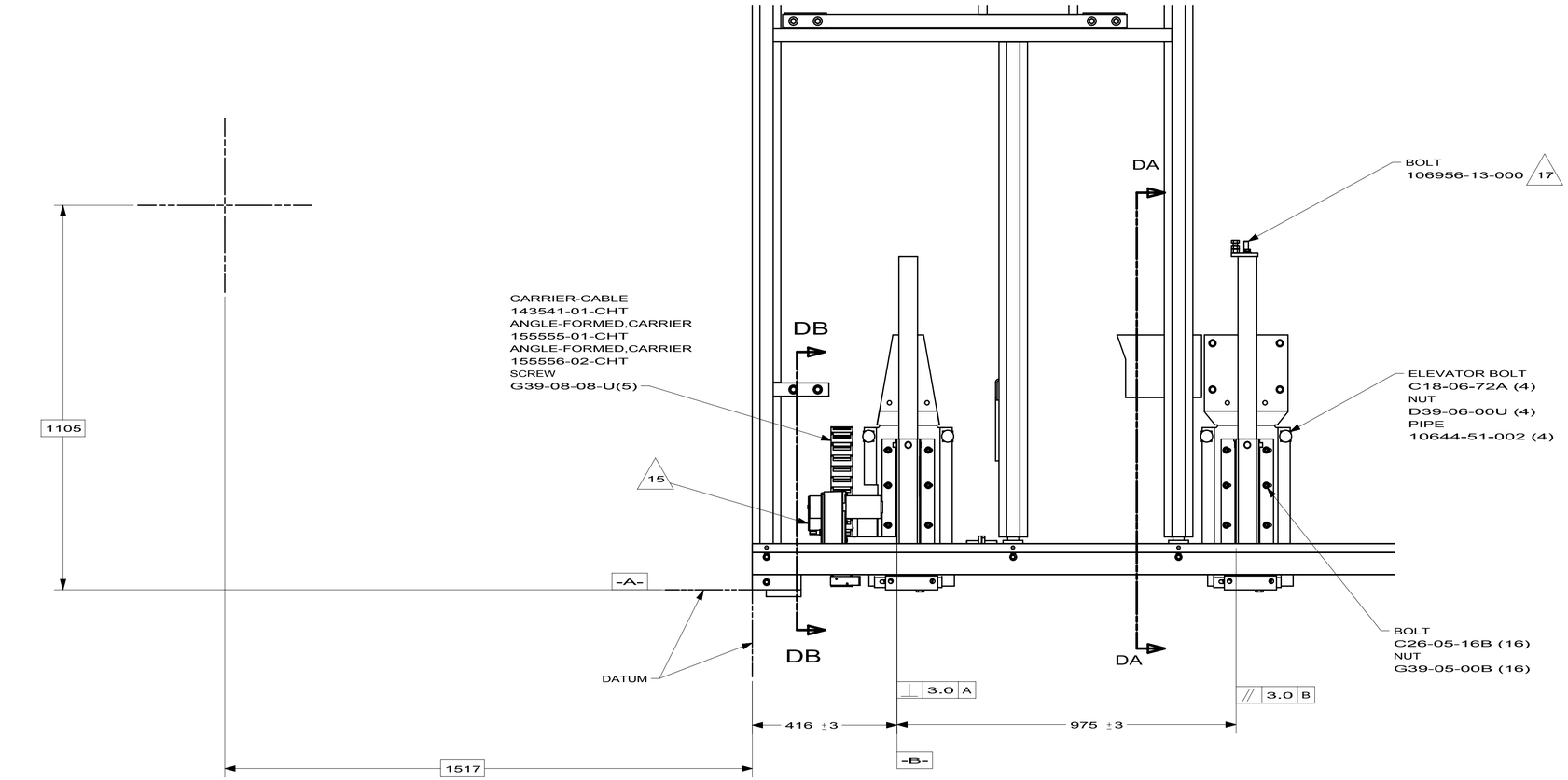


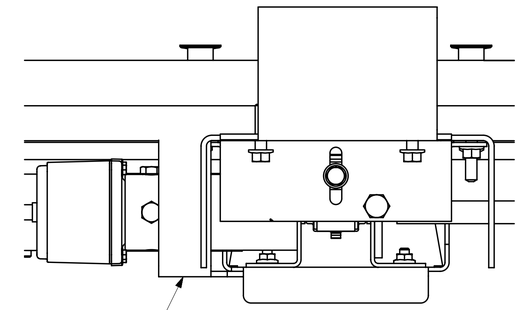


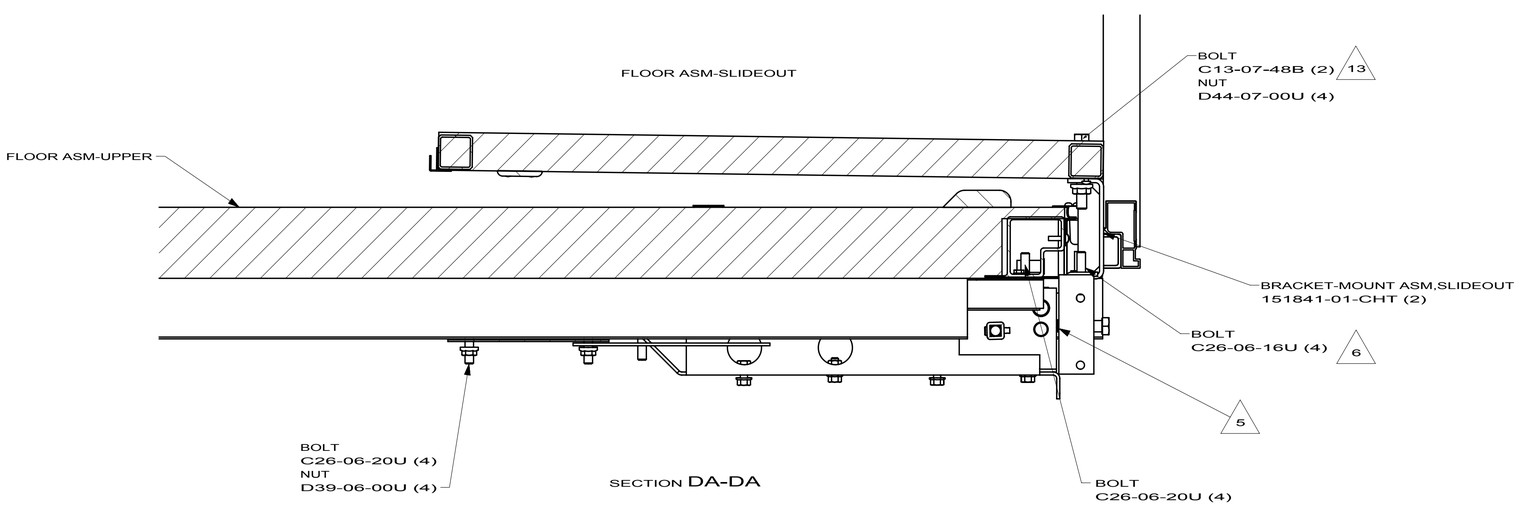


SECTION DA-DA

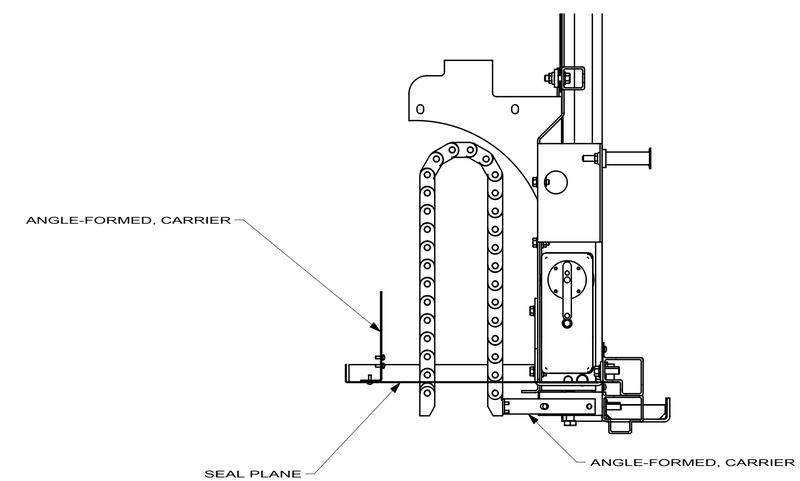


SECTION DB-DB

| | |
|---|---|
| FIRST USED | 10 524P |
| DO NOT SCALE DRAWING | |
| TITLE: | SLIDEOUT COMPL-FRT,LH |
| SHEET 4 | PART NO 169642 REV |

4/27/2010

148685-03-000

| KEY | PART NUMBER | U/M | DESCRIPTION | VENDOR NO. |
|---|---|---|---|---|
| | 125774-01-716 | EA | GROOVE PIN - 1/4" X 7/8" | |
| | 148685-01-700 | EA | MOTOR - 12 VOLT | 28408 |
| | 148685-01-701 | EA | BUSHING - 3/16" ID | 80501 |
| | 148685-01-702 | EA | HOLDING BRAKE | 28662 |
| | 148685-01-703 | EA | BEARING - F/TRANSFER GEAR | 14691 |
| | 148685-01-704 | EA | GEAR & SHAFT ASM. | 26191 |
| | 148685-01-705 | EA | TRANSFER GEAR | 28564 |
| | 148685-01-706 | EA | IDLER SHAFT ASM. | 26209 |
| | 148685-01-707 | EA | THRUST WASHER | 14459 |
| | 148685-01-709 | EA | BEARING - FLANGE TYPE | 645-0035 |
| | 148685-01-710 | EA | BEARING - FLANGE TYPE | 10055 |
| | 148685-01-711 | EA | ADAPTER - MOTOR TO GEAR | 28669 |
| | 148685-01-712 | EA | BEARING - FLANGE TYPE | 14458 |
| | 148685-01-713 | EA | GASKET - MOTOR TO COVER | 25596 |
| | 148685-01-714 | EA | POWERHEAD ASM. W/MOTOR | 29002 |
| | 148685-01-715 | EA | RAM TUBE- INNER W/GEAR STRIP | 28964 |
| | 148685-02-700 | EA | BEARING PAD | 26406 |
| | 148685-03-700 | EA | DRIVE SHAFT - LONG 27.75" | 31695 |
| | 150661-01-707 | EA | SET SCREW - 1/4"-20 | 608-6005 |
| | 150661-01-711 | EA | COTTER PIN | 625-0018 |
| | 150661-01-713 | EA | ADAPTER - ADJUSTABLE SHAFT | 28395 |
| | 150661-02-701 | EA | BEARING | 11536 |
| | 150661-02-702 | EA | FLANGE BEARING | 645-0007 |
| | 150661-02-703 | EA | SHAFT - SLAVE SPROCKET | 28400 |
| | 150661-02-705 | EA | CLEVIS PIN - .25" X 1" | 643-0019 |
| | 150661-02-706 | EA | DRIVE SHAFT ASM | 28398 |
| | 150661-02-708 | EA | CLEVIS PIN - .50" X 3" | 643-0029 |
| | 150661-02-709 | EA | SPROCKET | 28404 |
| | 150661-02-710 | EA | BEARING RACE - OUTER | 26393 |
| | 150661-02-711 | EA | ACTUATOR WASHER | 617-0022 |
| | 150661-02-712 | EA | ROLLER BEARING | 26391 |
| | 150661-02-713 | EA | BEARING PAD | 28966 |
| | 150661-02-715 | EA | DRIVE SHAFT - SHORT | 30812 |

COPYRIGHT © 2010 WINNEBAGO INDUSTRIES INC.

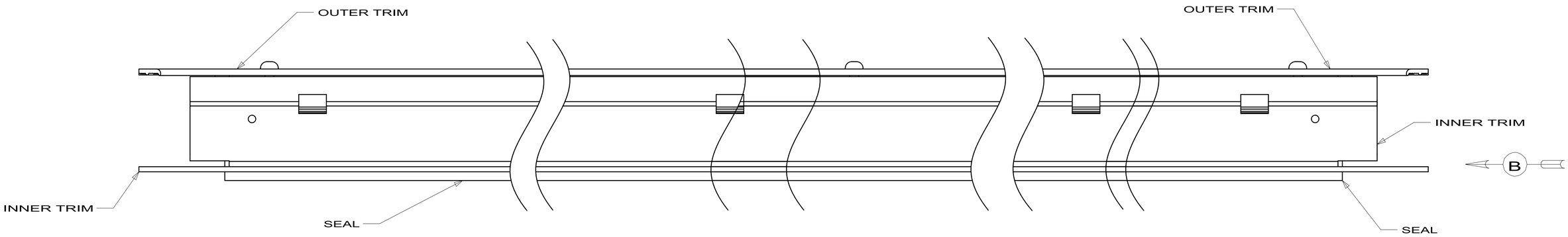


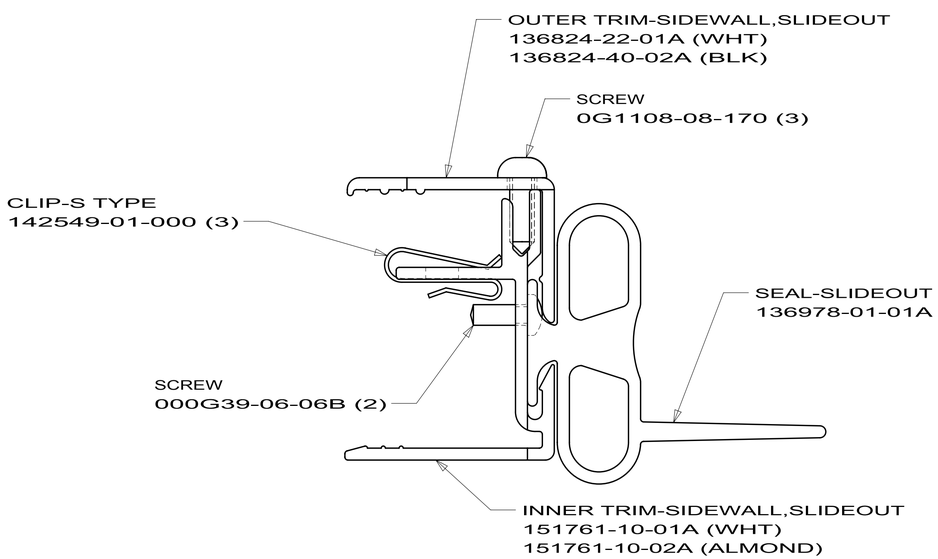


VIEW B

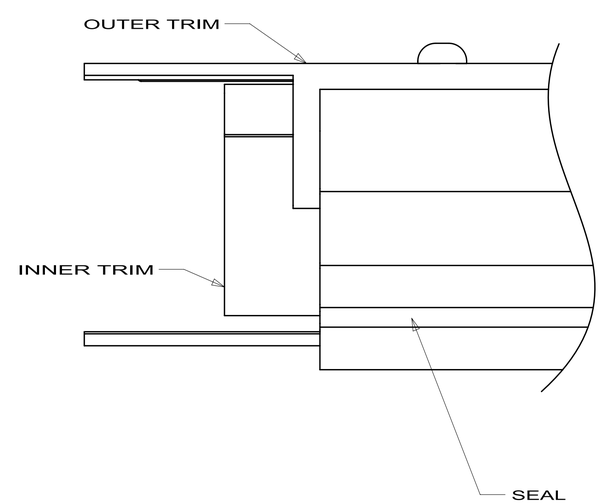


FABWELL SDW

TRIM ASM-SLIDEOUT,TOP

1 151762

4/27/2010

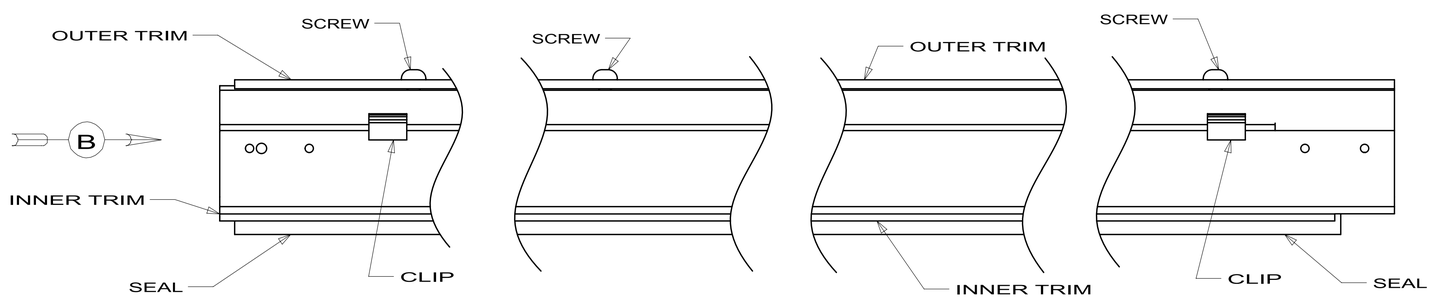


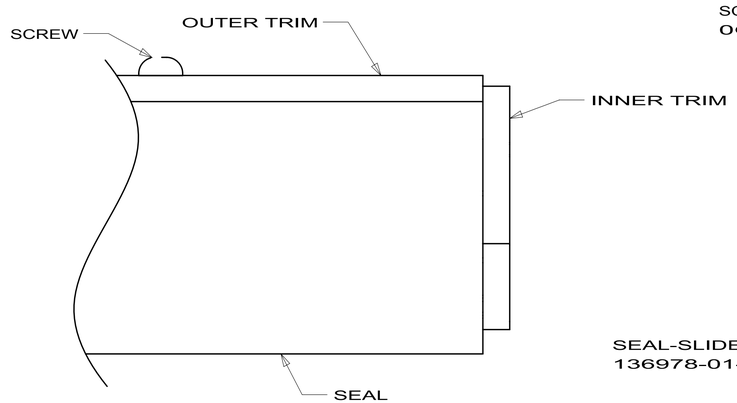


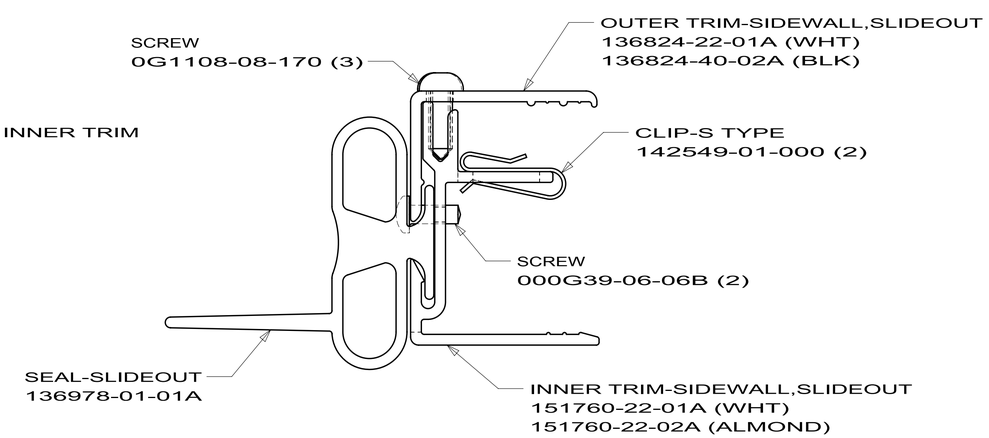


VIEW B

FABWELL SDW

TRIM ASM-SLIDEOUT,SIDE

1 2 151763

4/27/2010

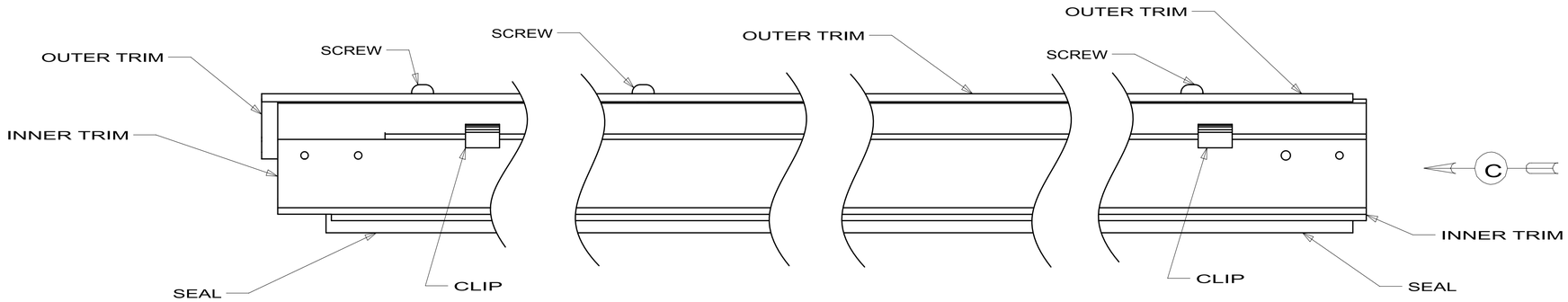


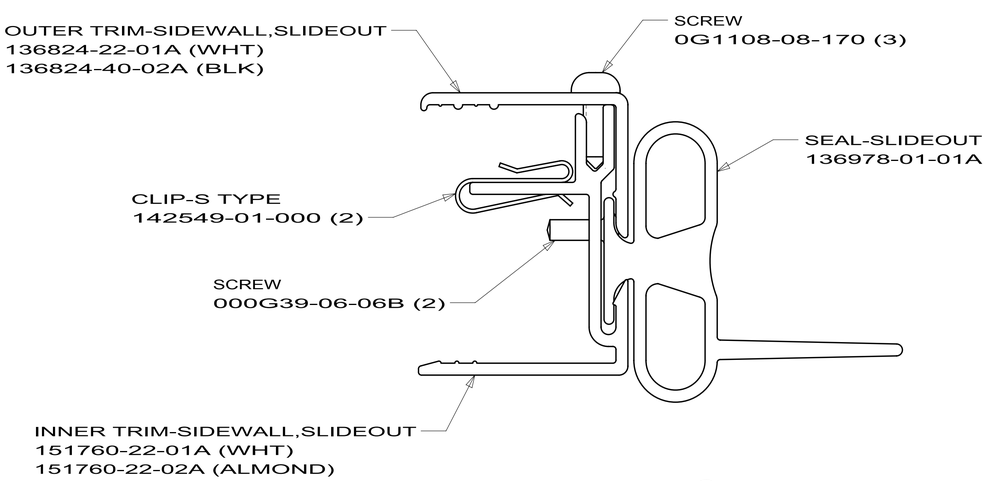


VIEW C

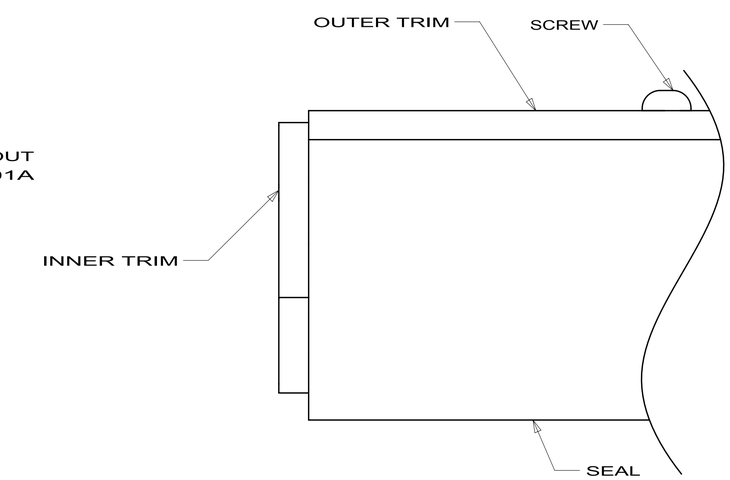


FABWELL SDW

TRIM ASM-SLIDEOUT,SIDE

2 151763

4/27/2010

DWG NO 159417

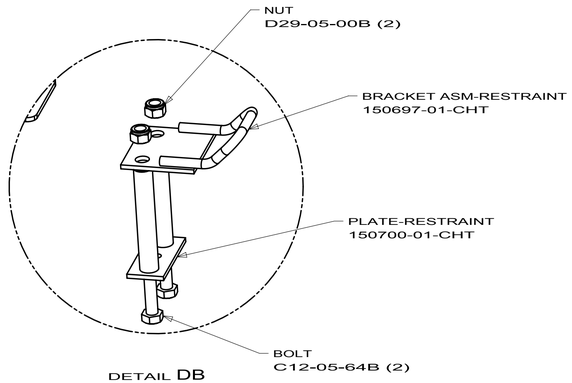


DETAIL DB

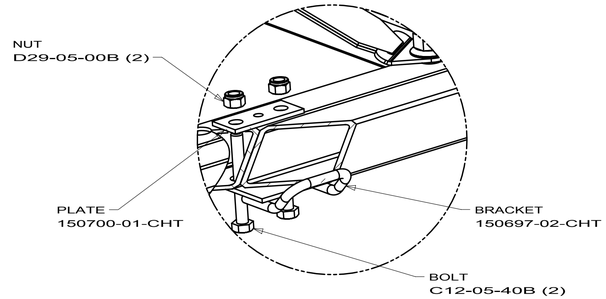


DETAIL VBC

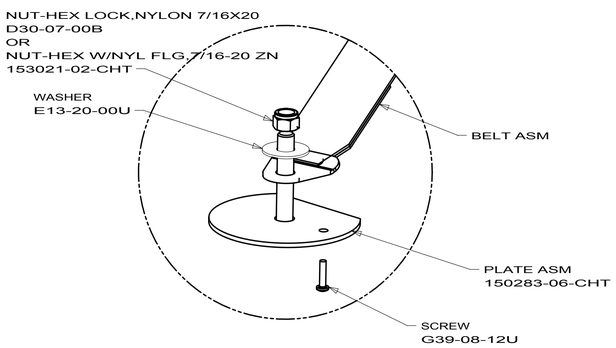


DETAIL VBD

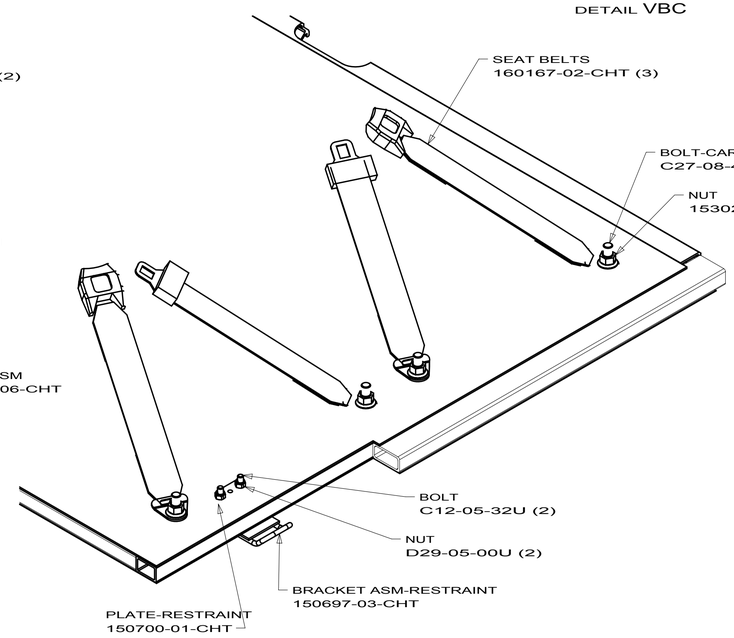


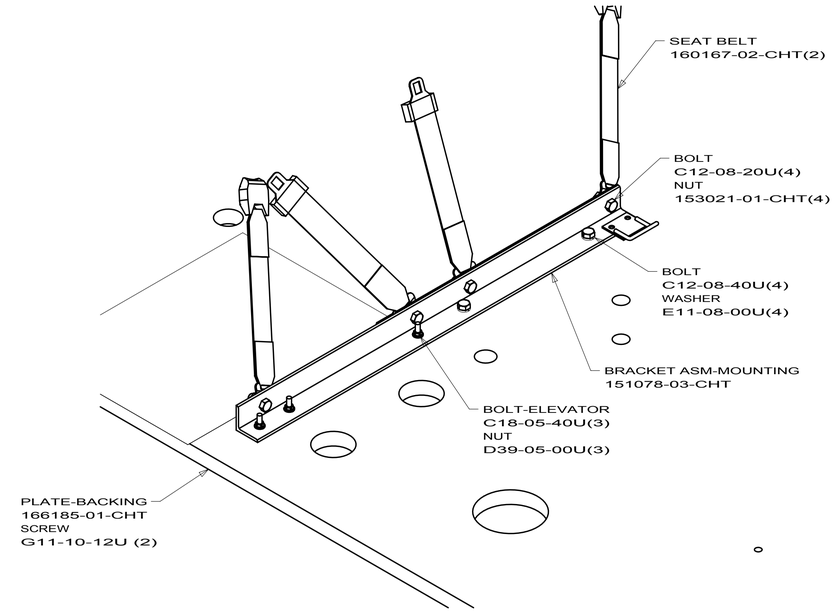


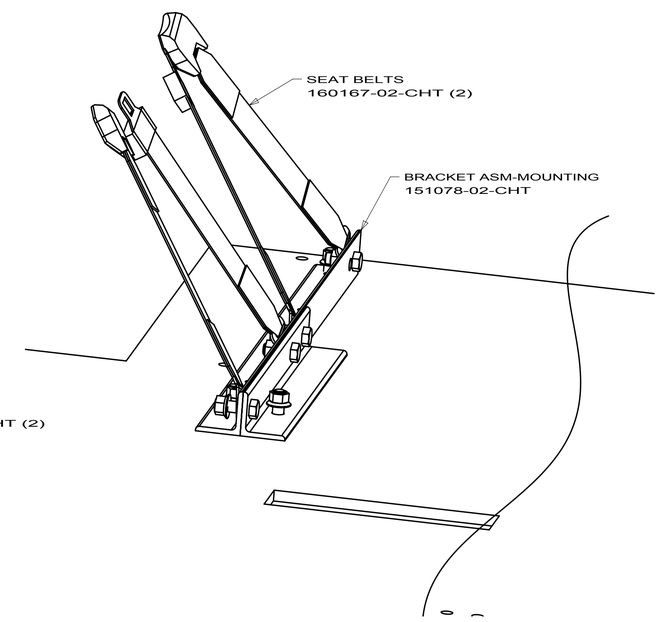


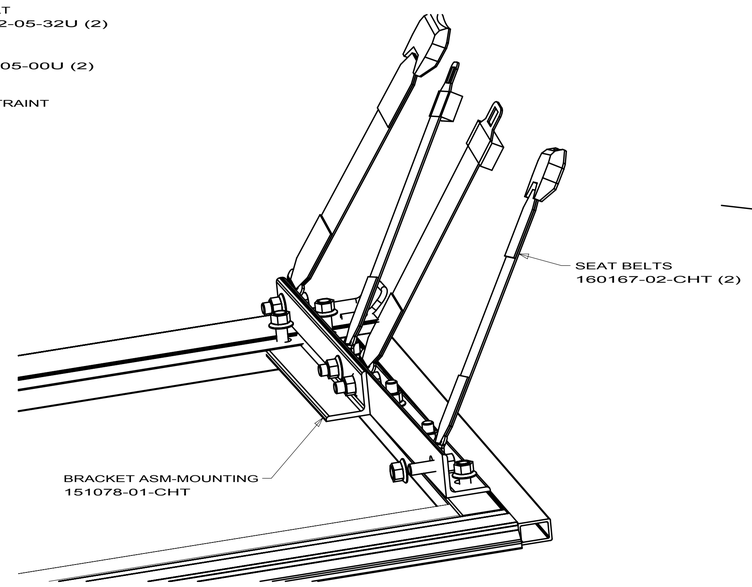


# SEAT BELT
# 160167-01-CHT 2 X 102" BLACK
# 160167-02-CHT 2 X 90" BLACK

| | |
|---|---|
| FIRST USED | 07 MOTORHOMES |
| | DO NOT SCALE DRAWING |
| TITLE: | SEAT BELT INSTL |
| SHEET 1 | PART NO 159417 REV |

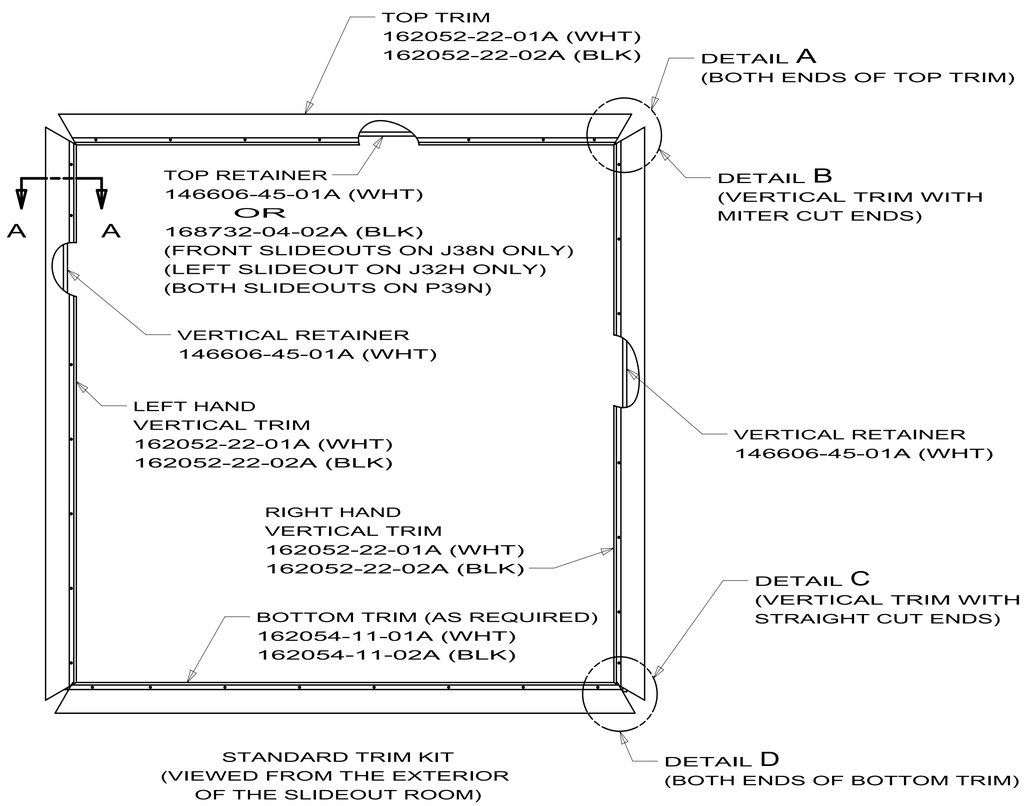


STANDARD TRIM KIT
(VIEWED FROM THE EXTERIOR
OF THE SLIDEOUT ROOM)

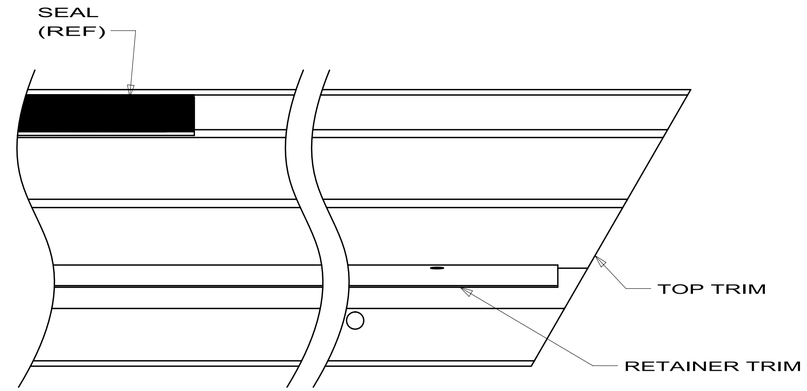


DETAIL A
(TOP TRIM)
(VIEWED FROM THE BACKSIDE OF THE TRIM)

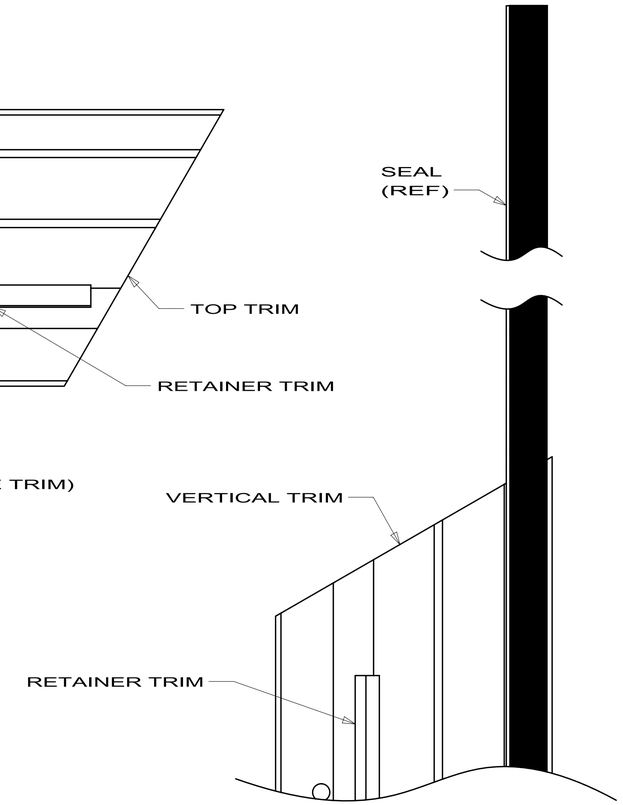


DETAIL B
(ALL MITER CUT VERTICAL TRIM)
(VIEWED FROM THE BACKSIDE OF THE TRIM)

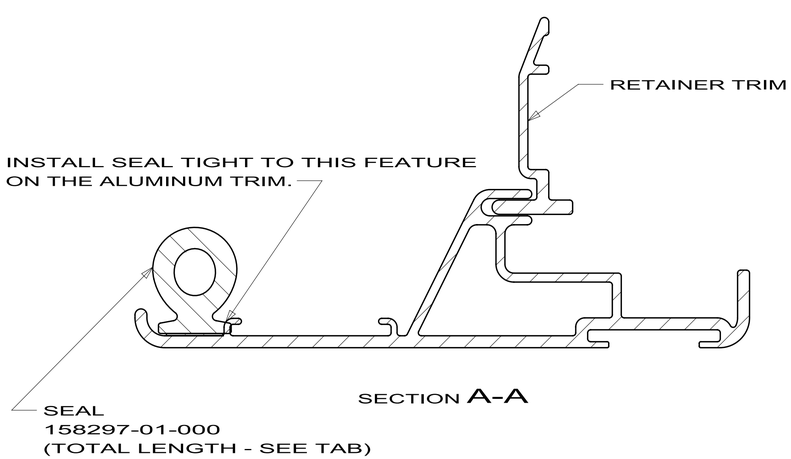


SECTION A-A

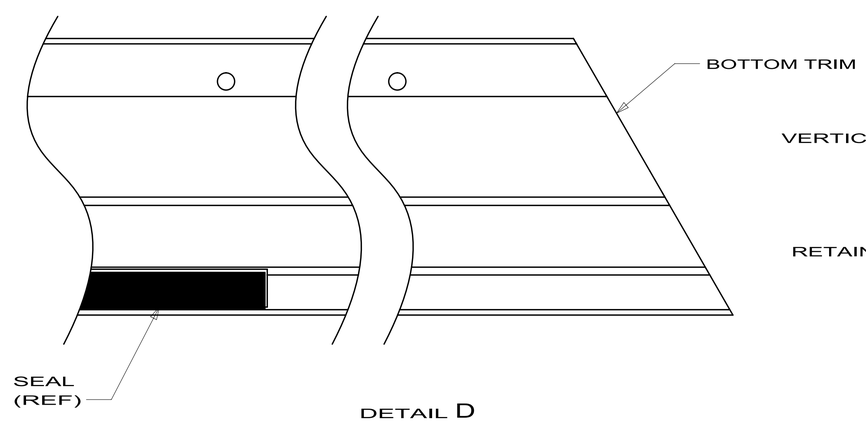


DETAIL D
(BOTTOM TRIM)
VIEWED FROM THE BACKSIDE OF THE TRIM)

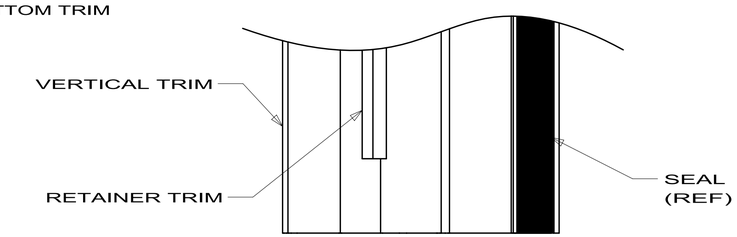


DETAIL C
(ALL STRAIGHT CUT VERTICAL TRIM)
(VIEWED FROM THE BACKSIDE OF THE TRIM)

2007 MOTORHOMES

TRIM KIT-EXTERIOR,SLIDEOUT

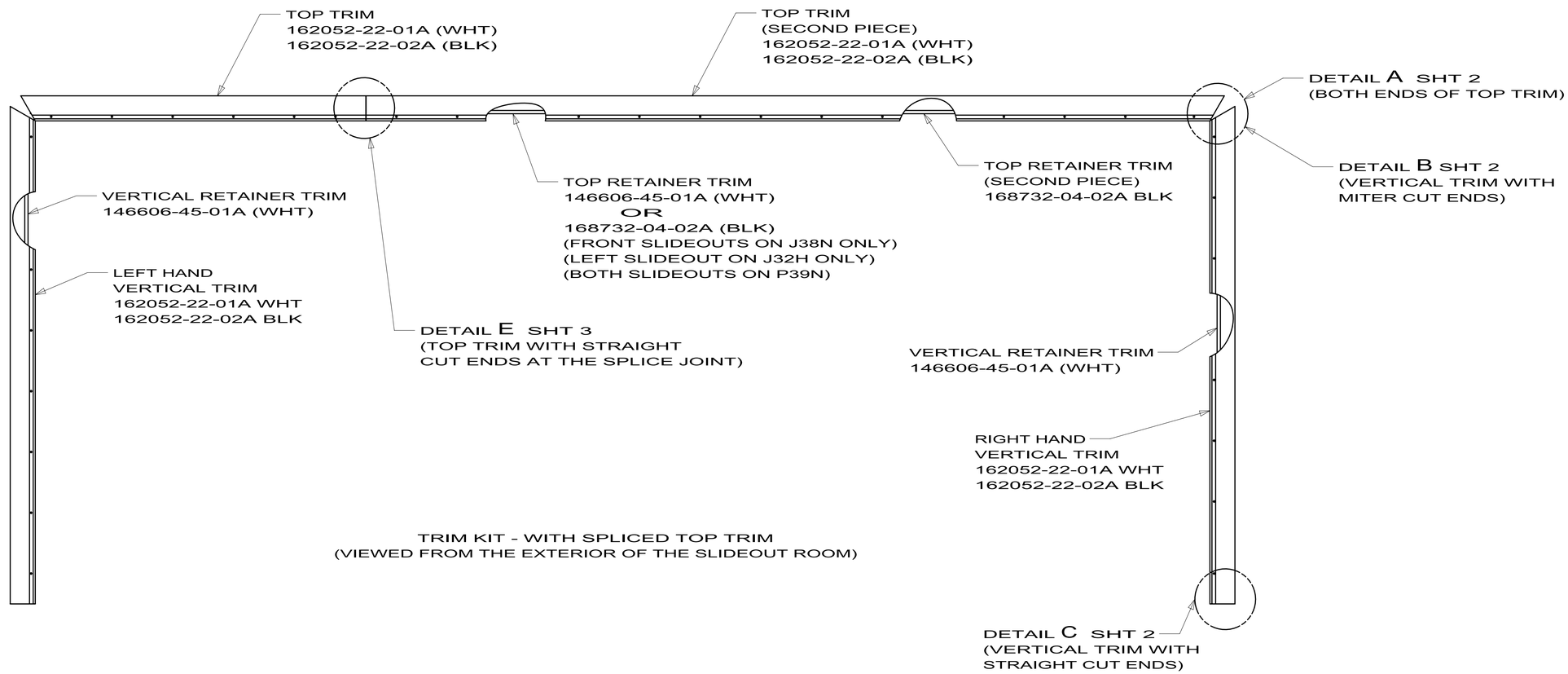


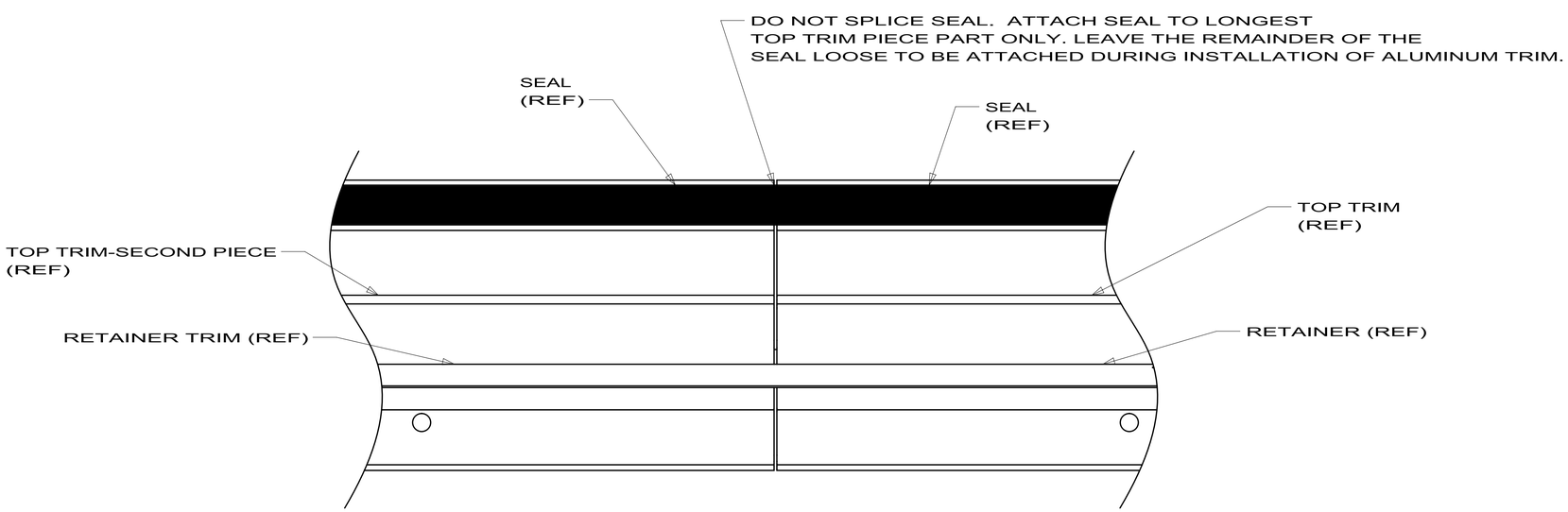


DETAIL E

(SPLICE IN TOP TRIM.)
(SHOWN FROM THE BACKSIDE OF TRIM.)

162495-01-01A, 162495-02-01A

| KEY | PART NUMBER | U/M | DESCRIPTION | VENDOR NO. |
|---|---|---|---|---|
| | 162495-01-700 | EA | BUTTON-DBL. PLAS. SNAP | DP130 |

COPYRIGHT © 2009 WINNEBAGO INDUSTRIES INC.

| DWG NO | SLIDEOUT SLUG SIZE △2 | TOP TRIM | TOP TRIM (SECOND PIECE) | RH VERT TRIM | LH VERT TRIM | LH VERT TRIM (SECOND PIECE) | SUPPORT-ASM | SUPPORT ASM (SECOND PIECE) | TOTAL SEAL LENGTH △3 |
|---|---|---|---|---|---|---|---|---|---|
| 174648-01 | 1907 X 3915 | 139624-09-CHT | – | 139624-01-CHT | 139624-02-CHT | – | 125466-01-CHT | – | 7960 |
| 174648-02 | 1788 X 1935 | 169060-02-CHT | – | 139624-51-CHT | 139624-50-CHT | – | – | – | 5750 |
| 174648-03 | 1907 X 5535 | 169060-28-CHT | 169060-21-CHT | 139624-01-CHT | 139624-02-CHT | – | 125466-22-CHT | 155339-17-CHT | 9590 |
| 174648-04 | 1886 X 2835 | 169329-08-CHT | – | 139624-18-CHT | 139624-19-CHT | – | – | – | 6850 |
| 174648-05 | 1907 X 1935 | 169060-02-CHT | – | 139624-01-CHT | 139624-02-CHT | – | – | – | 5990 |
| 174648-06 | 1886 X 5535 | 169329-28-CHT | 169329-21-CHT | 139624-18-CHT | 139624-19-CHT | – | – | – | 9550 |
| 174648-07 | 1801 X 2535 | 139624-23-CHT | – | 139624-01-CHT | 139624-02-CHT | – | 125466-23-CHT | – | 6380 |
| 174648-08 | 1804 X 2939 | 139624-66-CHT | – | 139624-01-CHT | 139624-02-CHT | – | 125466-13-CHT | – | 6790 |
| 174648-09 | 1801 X 3585 | 169060-13-CHT | – | 139624-01-CHT | 139624-02-CHT | – | 125466-02-CHT | – | 7430 |
| 174648-10 | 1635 X 2226 | 139624-82-CHT | – | 139624-37-CHT | 139624-38-CHT | – | – | – | 5740 |
| 174648-11 | 2057 X 3915 | 139624-09-CHT | – | 139624-47-CHT | 139624-46-CHT | – | – | – | 8270 |
| 174648-12 | 1897 X 7263 | 139624-65-CHT | 139624-64-CHT | 139624-25-CHT | 139624-26-CHT | – | 125466-11-CHT | 125468-10-CHT | 11300 |
| 174648-13 | 1948 X 3585 | 139624-04-CHT | – | 139624-41-CHT | 139624-42-CHT | – | – | – | 7720 |
| 174648-14 | 2057 X 2985 | 169329-09-CHT | – | 139624-45-CHT | 139624-44-CHT | – | – | – | 7340 |
| 174648-15 | 1967 X 7485 | 139624-92-CHT | 171623-02-CHT | 139624-99-CHT | 171623-01-CHT | – | – | – | 11660 |
| 174648-16 | 1635 X 2116 | 139624-84-CHT | – | 139624-37-CHT | 139624-38-CHT | – | – | – | 5630 |
| 174648-17 | 2057 X 3585 | 139624-06-CHT | – | 139624-59-CHT | 139624-60-CHT | – | 125466-02-CHT | – | 7940 |
| 174648-18 | 1948 X 2116 | 139624-84-CHT | – | 139624-41-CHT | 139624-42-CHT | – | – | – | 6250 |
| 174648-19 | 2057 X 4213 | 153113-03-CHT | – | 139624-45-CHT | 139624-44-CHT | – | – | – | 8570 |
| 174648-20 | 2057 X 3270 | 153113-05-CHT | – | 139624-45-CHT | 139624-44-CHT | – | – | – | 7630 |
| 174648-21 | 1948 X 2176 | 139624-90-CHT | – | 139624-41-CHT | 139624-42-CHT | – | – | – | 6310 |
| 174648-22 | 2057 X 1821 | 139624-86-CHT | – | 139624-41-CHT | 139624-42-CHT | – | – | – | 6180 |
| 174648-23 | 2057 x 4561 | 153113-11-CHT | – | 139624-45-CHT | 139624-44-CHT | – | – | – | 8920 |
| 174648-24 | 2057 x 3780 | 153113-10-CHT | – | 139624-45-CHT | 139624-44-CHT | – | – | – | 8140 |
| 174648-25 | 2057 x 3735 | 169329-17-CHT | – | 139624-45-CHT | 139624-44-CHT | – | – | – | 8090 |
| 174648-26 | 2057 x 4635 | 169060-20-CHT | – | 139624-41-CHT | 139624-42-CHT | – | 125466-02-CHT | – | 8990 |
| 174648-27 | 1635 x 1935 | 169060-02-CHT | – | 139624-37-CHT | 139624-38-CHT | – | – | – | 5450 |
| 174648-28 | 2057 x 6735 | 169329-36-CHT | 169329-21-CHT | 139624-45-CHT | 139624-44-CHT | – | – | – | 11090 |
| 174648-29 | 2057 x 4935 | 169329-24-CHT | 169329-21-CHT | 139624-45-CHT | 139624-44-CHT | – | – | – | 9290 |
| 174648-30 | 2057 x 3850 | 169060-15-CHT | – | 139624-47-CHT | 139624-46-CHT | – | 125466-18-CHT | – | 8200 |
| 174648-31 | 1978 x 7785 | 169329-36-CHT | 169329-22-CHT | 139624-94-CHT | 139624-93-CHT | – | 169689-02-CHT | 169689-01-CHT | 11980 |
| 174648-32 | 1801 x 2235 | 169060-04-CHT | – | 139624-51-CHT | 139624-50-CHT | – | – | – | 6080 |
| 174648-33 | 2057 x 4185 | 169060-17-CHT | – | 139624-47-CHT | 139624-80-CHT | 139624-81-CHT | 125466-19-CHT | – | 8540 |
| 174648-34 | 2057 x 4935 | 169060-24-CHT | 169060-21-CHT | 139624-47-CHT | 139624-46-CHT | – | 169719-01-CHT | – | 9290 |
| 174648-35 | 2057 x 3735 | 169060-14-CHT | – | 139624-47-CHT | 139624-46-CHT | – | 125466-20-CHT | – | 8090 |
| 174648-36 | 2057 x 4035 | 169060-16-CHT | – | 139624-47-CHT | 139624-46-CHT | – | 125466-21-CHT | – | 8390 |
| 174648-37 | 2057 x 4935 | 169329-24-CHT | 169329-21-CHT | 139624-45-CHT | 139624-44-CHT | – | 169689-03-CHT | – | 9290 |
| 174648-38 | 1801 x 1935 | 169060-02-CHT | – | 139624-25-CHT | 139624-26-CHT | – | – | – | 5780 |
| 174648-39 | 2057 x 4335 | 169060-18-CHT | – | 139624-41-CHT | 139624-42-CHT | – | 125466-26-CHT | – | 8690 |
| 174648-40 | 2057 x 5085 | 169329-25-CHT | 169329-21-CHT | 139624-45-CHT | 139624-44-CHT | – | – | – | 9440 |
| 174648-41 | 1718 x 2583 | 139624-73-CHT | – | 139624-75-CHT | 139624-74-CHT | – | – | – | 6260 |
| 174648-42 | 1907 x 3435 | 139624-95-CHT | – | 139624-25-CHT | 139624-26-CHT | – | 125466-24-CHT | – | 7490 |
| 174648-43 | 1908 x 1590 | 139624-72-CHT | – | 139624-25-CHT | 139624-26-CHT | – | – | – | 5650 |
| 174648-44 | 1907 x 3925 | 139624-91-CHT | – | 139624-25-CHT | 139624-26-CHT | – | – | – | 7980 |
| 174648-45 | 1804 x 2566 | 139624-23-CHT | – | 139624-01-CHT | 139624-02-CHT | – | 125466-09-CHT | – | 6420 |
| 174648-46 | 1718 x 3495 | 139624-07-CHT | – | 139624-13-CHT | 139624-14-CHT | – | 125466-03-CHT | – | 7170 |
| 174648-47 | 1475 x 1926 | 139624-04-CHT | – | 139624-20-CHT | 139624-21-CHT | – | – | – | 5120 |
| 174648-48 | 1804 x 2535 | 169060-06-CHT | – | 139624-01-CHT | 139624-02-CHT | – | – | – | 6390 |
| 174648-49 | 1804 x 3495 | 139624-07-CHT | – | 139624-01-CHT | 139624-02-CHT | – | 125466-03-CHT | – | 7350 |
| 174648-50 | 1804 x 1926 | 139624-04-CHT | – | 139624-01-CHT | 139624-02-CHT | – | – | – | 5780 |
| 174648-51 | 1718 x 1865 | 139624-35-CHT | – | 139624-13-CHT | 139624-14-CHT | – | – | – | 5540 |

△3. TOTAL SEAL LENGTH = (SLUG HEIGHT X 2) + SLUG LENGTH + 240mm

△2. SLIDEOUT SLUG SIZE IS MEASURED TO THE SURFACE OF THE ALUMINUM TUBES AND LISTED BY HEIGHT X LENGTH.

1. TRIM VIEWED FROM THE INSIDE OF THE SLIDEOUT ROOM UNLESS NOTED.

NOTES:

| RELEASE | REV A | DATE | DWG NO 174648 |
|---|---|---|---|

| REV | ZONE | REVISION RECORD | DATE | DFTR-ORIG |
|---|---|---|---|---|

WINNEBAGO INDUSTRIES

COPYRIGHT 2009
WINNEBAGO
INDUSTRIES, INC.

DFTR | ORIG. DATE
CHKR
P.E.
M.E.
DSNR

ALL DIMENSIONS ARE IN MILLIMETERS

FIRST USED: 2010 MOTORHOMES

UNSPECIFIED TOLERANCES ARE:
WHOLE DIM (X) : 3
ONE-PLACE (X.X) : 1.5
TWO-PLACE (X.XX) : 0.50
ANGLE : 1°

MATERIAL:

THIRD ANGLE PROJECTION

DO NOT SCALE DRAWING

TITLE: TRIM KIT-INTERIOR,SLIDEOUT

SHEET 1 OF 4 | PART NO 174648 | REV

REF:

10/15/2009

DWG NO 174648

| DWG NO | SLIDEOUT SLUG SIZE 2 | TOP TRIM | TOP TRIM (SECOND PIECE) | RH VERT TRIM | LH VERT TRIM | LH VERT TRIM (SECOND PIECE) | SUPPORT-ASM | SUPPORT ASM (SECOND PIECE) | TOTAL SEAL LENGTH 3 |
|---|---|---|---|---|---|---|---|---|---|
| 174648-52 | 1788 x 1926 | 139624-04-CHT | – | 139624-25-CHT | 139624-26-CHT | – | – | – | 5750 |
| 174648-53 | 1804 x 1865 | 139624-35-CHT | – | 139624-01-CHT | 139624-02-CHT | – | – | – | 5720 |
| 174648-54 | 1922 x 3495 | 139624-07-CHT | – | 139624-01-CHT | 139624-02-CHT | – | 125466-03-CHT | – | 7580 |
| 174648-55 | 1718 x 3495 | 139624-07-CHT | – | 139624-18-CHT | 139624-19-CHT | – | 125466-03-CHT | – | 7170 |
| 174648-56 | 1718 x 2167 | 139624-32-CHT | – | 139624-13-CHT | 139624-14-CHT | – | – | – | 5850 |
| 174648-57 | 1428 x 1782 | 139624-76-CHT | – | 139624-83-CHT | 139624-78-CHT | – | – | – | 4880 |
| 174648-58 | 1718 x 2583 | 139624-28-CHT | – | 139624-13-CHT | 139624-14-CHT | – | 125466-17-CHT | – | 6260 |
| 174648-59 | 1718 x 1828 | 139624-79-CHT | – | 139624-13-CHT | 139624-14-CHT | – | – | – | 5510 |
| 174648-60 | 1428 x 1782 | 139624-76-CHT | – | 139624-77-CHT | 139624-78-CHT | – | – | – | 4880 |
| 174648-61 | 1635 x 2085 | 169060-03-CHT | – | 139624-37-CHT | 139624-38-CHT | – | – | – | 5595 |
| 174648-62 | 1804 x 2805 | 139264-27-CHT | – | 139624-01-CHT | 139624-02-CHT | – | 125466-08-CHT | – | 6660 |
| 174648-63 | 1907 x 3585 | 139624-06-CHT | – | 139624-01-CHT | 139624-02-CHT | – | 125466-02-CHT | – | 7640 |
| 174648-64 | 2057 x 2835 | 169329-08-CHT | – | 139624-45-CHT | 139624-44-CHT | – | – | – | 7190 |
| 174648-65 | 1978 x 7185 | 169060-39-CHT | 169060-21-CHT | 139624-94-CHT | 139624-93-CHT | – | 125466-11-CHT | – | 11380 |
| 174648-66 | 1907 x 2685 | 169060-07-CHT | – | 139624-25-CHT | 139624-26-CHT | – | – | – | 6740 |
| 174648-67 | 1801 x 2685 | 169060-07-CHT | – | 139624-01-CHT | 139624-02-CHT | – | 125466-25-CHT | – | 6530 |
| 174648-68 | 1801 x 1935 | 169060-02-CHT | – | 139624-01-CHT | 139624-02-CHT | – | – | – | 5777 |
| 174648-69 | 1935 x 1935 | 169060-02-CHT | – | 171623-05-CHT | 171623-04-CHT | – | – | – | 6045 |
| 174648-70 | 1417 x 1935 | 169060-03-CHT | – | 171623-09-CHT | 171623-10-CHT | – | – | – | 5010 |
| 174648-71 | 1723 x 2235 | 169060-04-CHT | – | 171623-11-CHT | 171623-12-CHT | – | – | – | 5920 |
| 174648-72 | 1723 x 1935 | 169060-02-CHT | – | 171623-11-CHT | 171623-12-CHT | – | – | – | 5620 |
| 174648-73 | 1688 x 3885 | 169060-15-CHT | – | 139624-96-CHT | 139624-97-CHT | – | 125466-18-CHT | – | 7500 |
| 174648-74 | 1688 x 1420 | 139624-98-CHT | – | 139624-96-CHT | 139624-97-CHT | – | – | – | 5045 |
| 174648-75 | 1978 x 7185 | 139624-64-CHT | 171623-08-CHT | 171623-07-CHT | 171623-06-CHT | – | 125468-10-CHT | 125466-11-CHT | 11380 |
| 174648-76 | 1978 x 7485 | 139624-92-CHT | 171623-02-CHT | 171623-07-CHT | 171623-06-CHT | – | – | – | 11680 |

FIRST USED
2010 MOTORHOMES

DO NOT SCALE DRAWING

TITLE:
TRIM KIT-INTERIOR,SLIDEOUT

SHEET 2 | PART NO. 174648 | REV

10/15/2009

DWG NO 174648

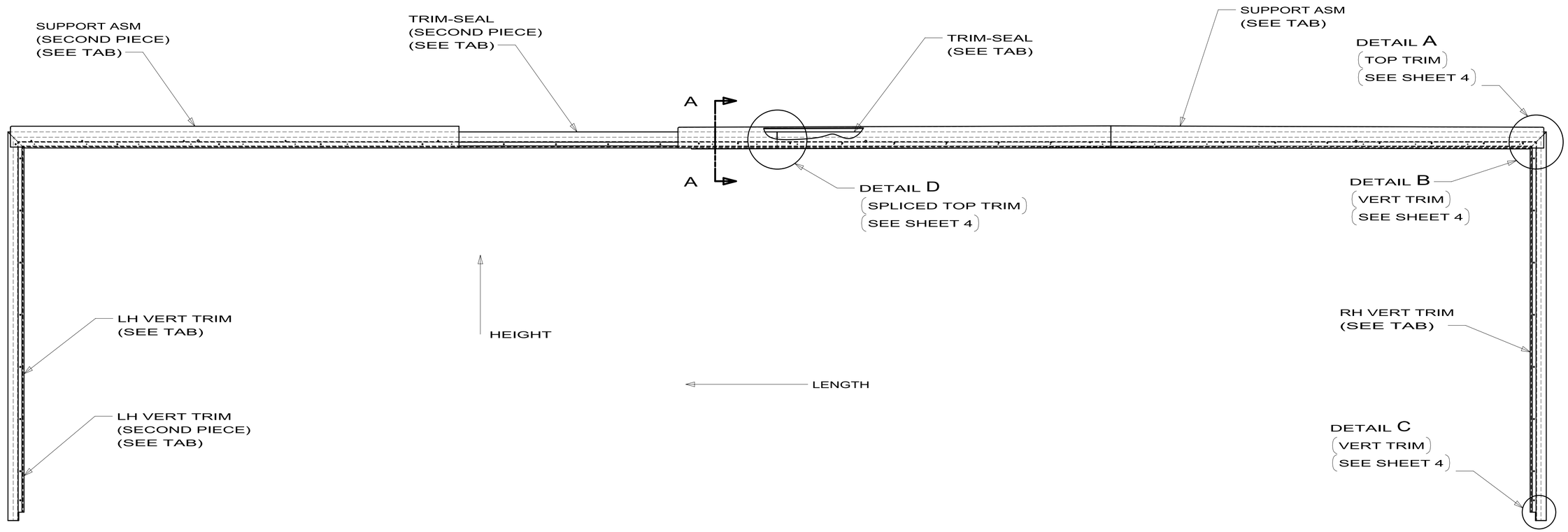


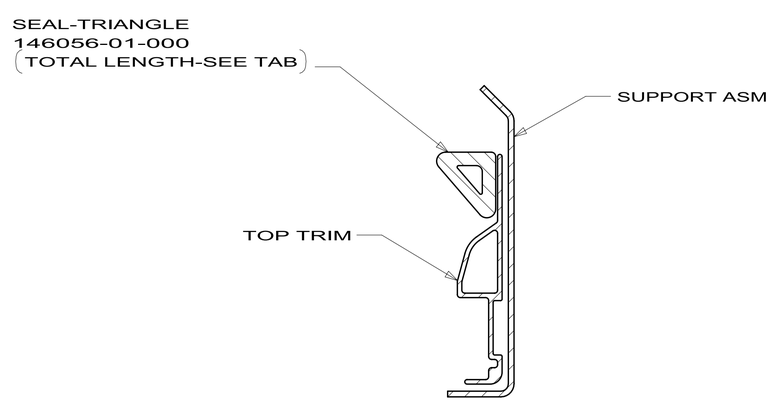


SECTION A-A

| | |
|---|---|
| FIRST USED | 2010 MOTORHOMES |
| | DO NOT SCALE DRAWING |
| TITLE: | TRIM KIT-INTERIOR,SLIDEOUT |
| SHEET 3 | PART NO 174648 REV |

10/15/2009

DWG NO 174648

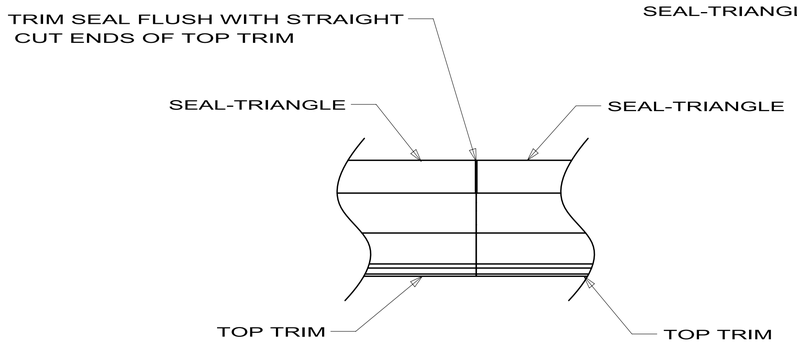


DETAIL D

(USE WITH SPLICED TOP TRIM)

(VIEWED FROM THE BACKSIDE OF THE TRIM)

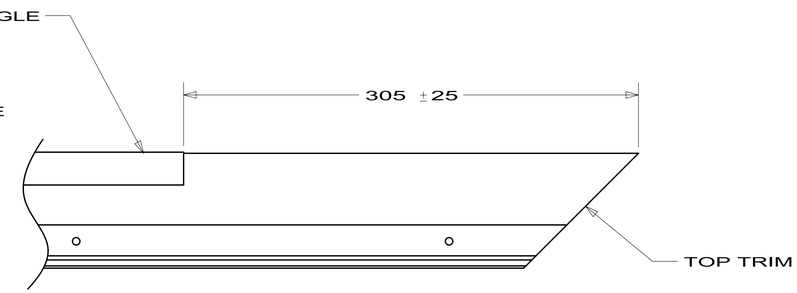


DETAIL A

(MITERED ENDS TOP TRIM)

(VIEWED FROM THE BACKSIDE OF THE TRIM)

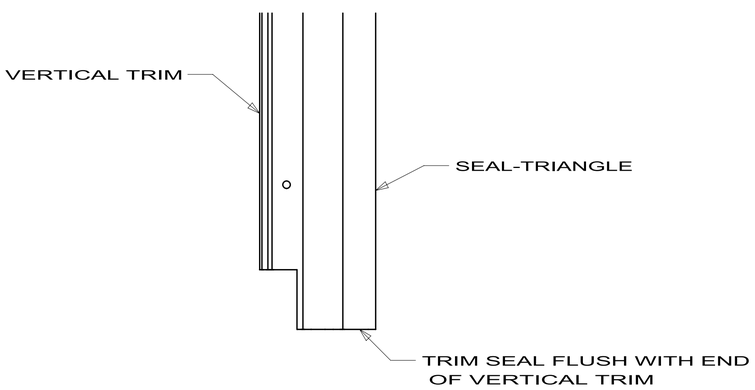


DETAIL C

(BOTTOM OF VERTICAL TRIM)

(VIEWED FROM THE BACKSIDE OF THE TRIM)

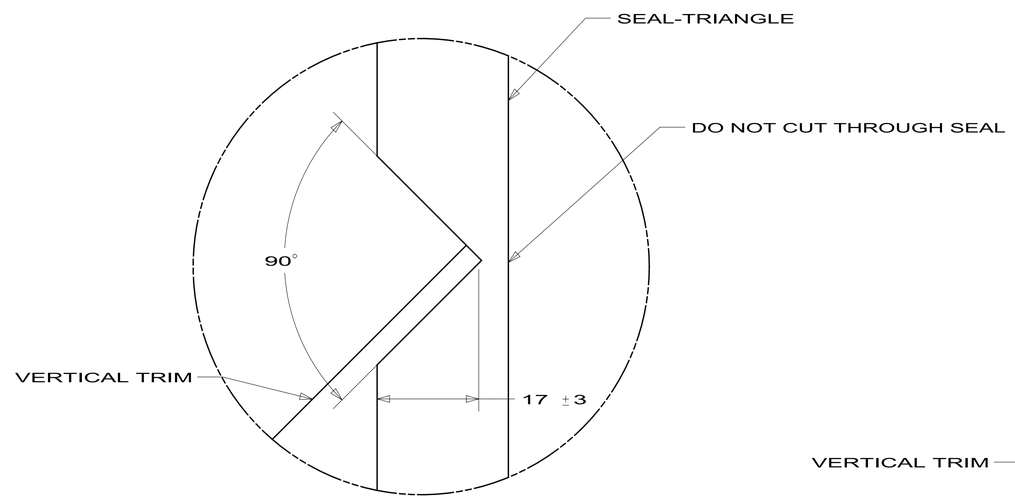


DETAIL E

SEAL IS NOTCHED DURING THE INSTALLATION

OF THE TRIM AND ATTACHED TO THE TOP TRIM

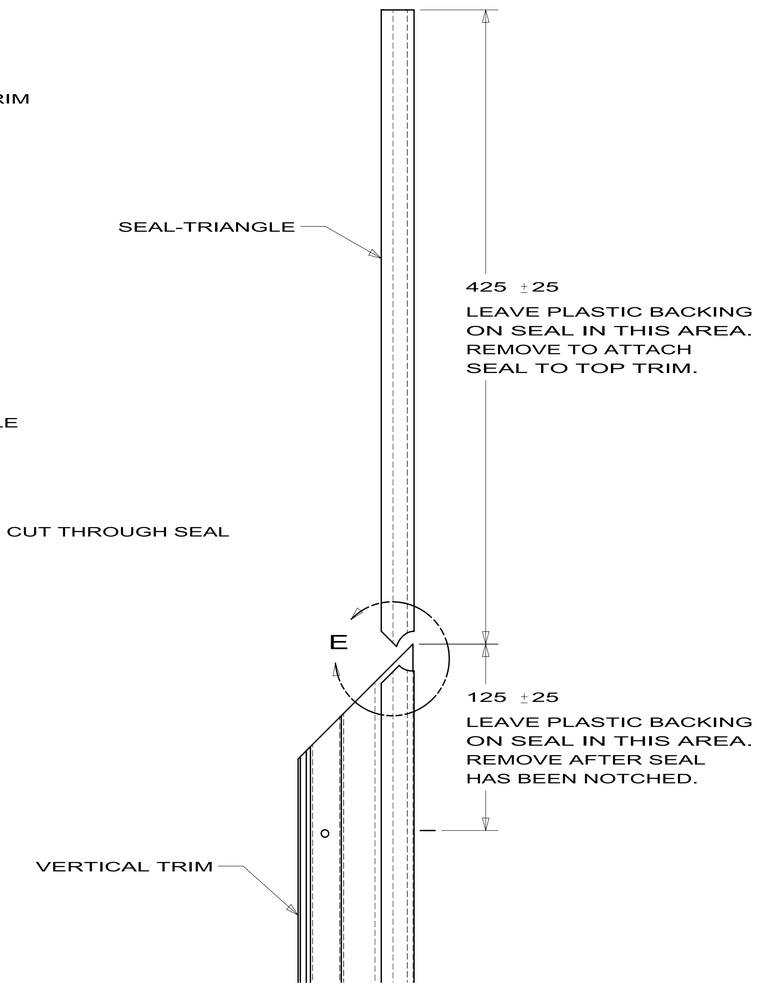


DETAIL B

(MITERED ENDS OF VERTICAL TRIM)

(VIEWED FROM THE BACKSIDE OF THE TRIM)

| | |
|---|---|
| FIRST USED | 2010 MOTORHOMES |
| | DO NOT SCALE DRAWING |
| TITLE: | TRIM KIT-INTERIOR,SLIDEOUT |
| SHEET 4 | PART NO 174648 REV |

10/15/2009