DRAWING NO.	FEATURE
173477-01	-------
173477-11	1B1 12D
173477-15	265 12D

RELEASE	REV A	DATE	DWG NO 173477
REV	ZONE	REVISION RECORD	DATE	DFTR-ORIG

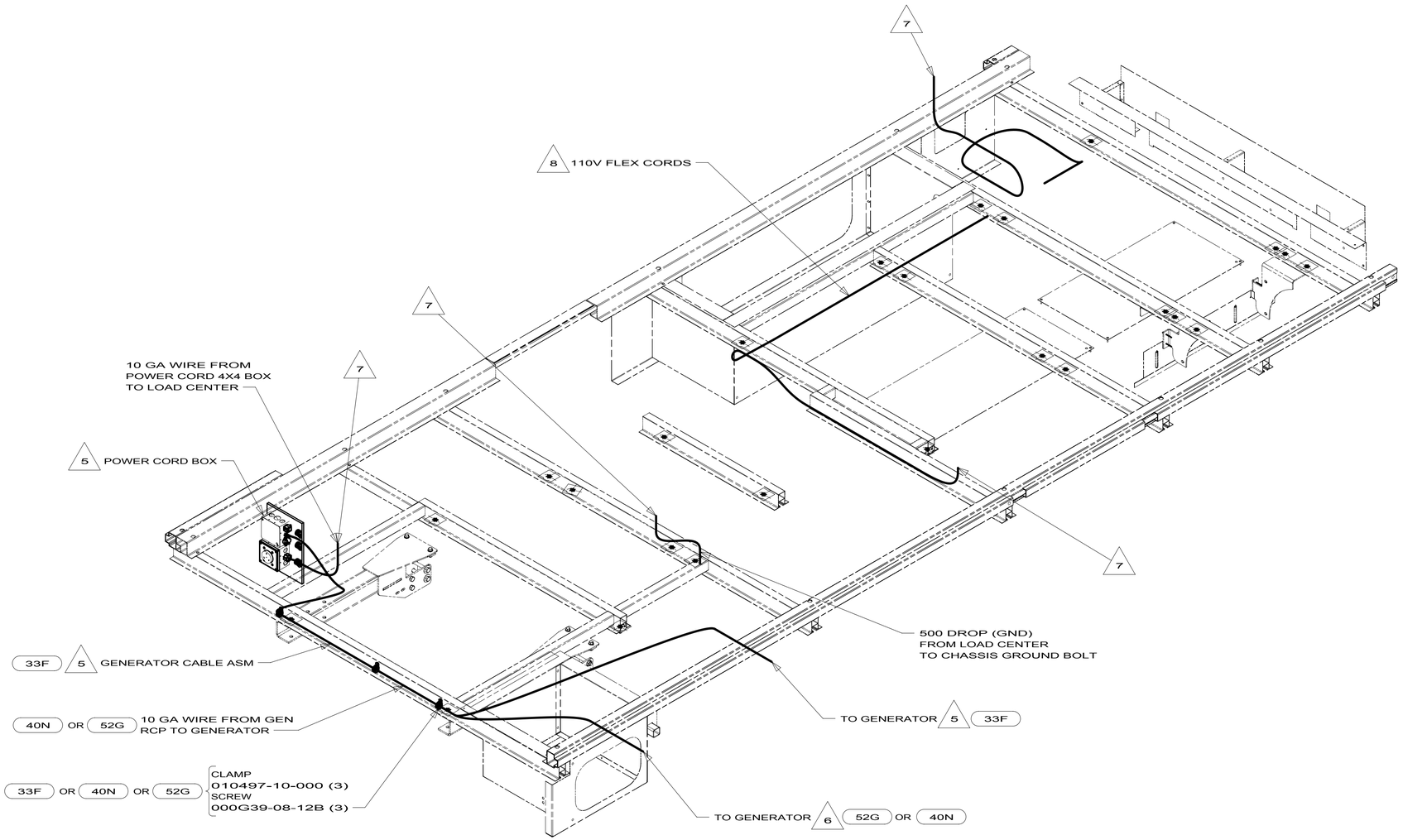

33F GEN-3.5 KW ONAN DIESEL

40N GEN-4.0KW-ONANGAS-MICROQUIET

52G GEN-3.6KW ONAN LP MICROQUIET

12D ELECTRICAL SYSTEM 30 AMP

265 CODES/STANDARDS-CSA/CMVSS

1B1 CODES/STANDARDS USA

8 CORDS ARE PART OF WIRE ASM-CHASSIS.

7 WIRE ROUTED THROUGH FLOOR AT THIS POINT.

6 SEE GENERATOR INSTL FOR ADDITIONAL INFORMATION.

5 SEE LOAD CENTER/ATS ASM FOR ADDITIONAL INFORMATION.

4. SEE WIRING DIAGRAM-BODY,110V FOR ADDITIONAL INFORMATION.

3. ALL GROUND WIRE TO BE COVERED WITH TUBING 008041-02-000.

2. ALL 110V WIRE TO BE CLAMPED WITH CLAMP 010497-05-000 WITHIN 200MM OF OUTLET BOXES, USE SCREW 000G67-10-12B.

1. ALL WIRES TO BE SECURED WITH CLAMP 010495-01-000 OR CLIP 080734-01-000 EVERY 600MM. USE SCREW 000G67-10-12B UNLESS OTHERWISE SPECIFIED.

NOTES:

FOR ELECTRICAL TORQUE SPECIFICATIONS SEE DWG NO. 128783-01-000

X-X FOR ELECTRICAL CALLOUTS SEE DWG NO. 121339-01-000

1B1 265 12D

WINNEBAGO INDUSTRIES

COPYRIGHT 2010
WINNEBAGO
INDUSTRIES, INC.

DFTR	ORIG. DATE
CHKR	ALL DIMENSIONS ARE IN MILLIMETERS
P.E.	
M.E.	FIRST USED
DSNR	10 524A

UNSPECIFIED TOLERANCES ARE:

WHOLE DIM (X)	:	3
ONE-PLACE (X.X)	:	1.5
TWO-PLACE (X.XX)	:	0.50
ANGLE	:	1°

MATERIAL:

THIRD ANGLE PROJECTION

DO NOT SCALE DRAWING

TITLE: WIRING INSTL-BODY,110V

SHEET 1 OF 4 | PART NO 173477 | REV

REF: 1

4/10/2010

DWG NO 173477

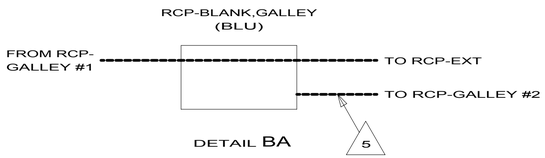

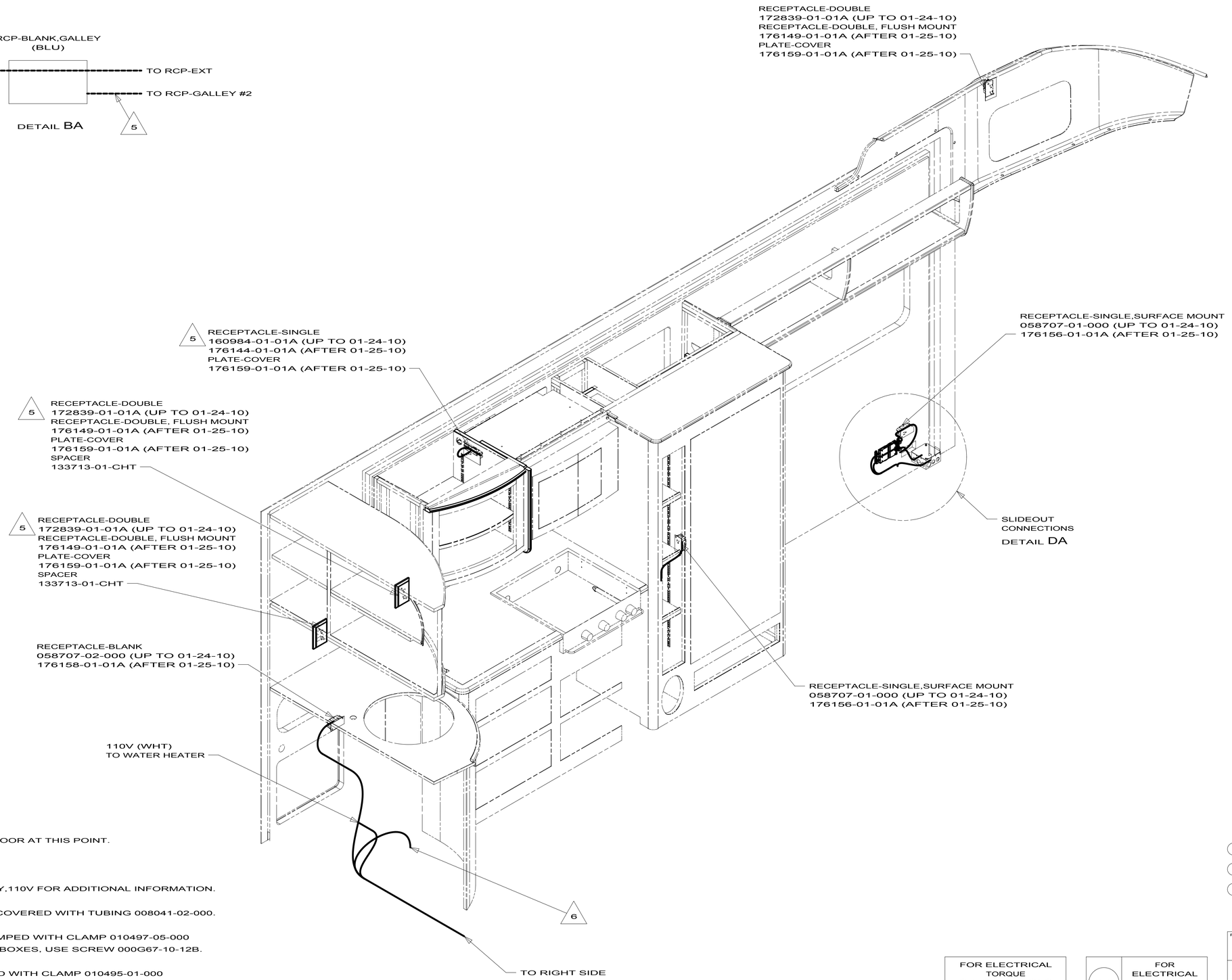

6 WIRE ROUTED THROUGH FLOOR AT THIS POINT.

5 WIRE IN SIDEWALL.

4. SEE WIRING DIAGRAM-BODY,110V FOR ADDITIONAL INFORMATION.

3. ALL GROUND WIRE TO BE COVERED WITH TUBING 008041-02-000.

2. ALL 110V WIRE TO BE CLAMPED WITH CLAMP 010497-05-000 WITHIN 200MM OF OUTLET BOXES, USE SCREW 000G67-10-12B.

1. ALL WIRES TO BE SECURED WITH CLAMP 010495-01-000 OR CLIP 080734-01-000 EVERY 600MM. USE SCREW 000G67-10-12B UNLESS OTHERWISE SPECIFIED.

NOTES:

FOR ELECTRICAL TORQUE SPECIFICATIONS SEE DWG NO. 128783-01-000

X-X FOR ELECTRICAL CALLOUTS SEE DWG NO. 121339-01-000

12D ELECTRICAL SYSTEM 30 AMP

265 CODES/STANDARDS-CSA/CMVSS

1B1 CODES/STANDARDS USA

1B1 265 12D

FIRST USED 10 524A

DO NOT SCALE DRAWING

TITLE: WIRING INSTL-BODY,110V

SHEET 2 PART NO 173477 REV

4/10/2010

DWG NO 173477

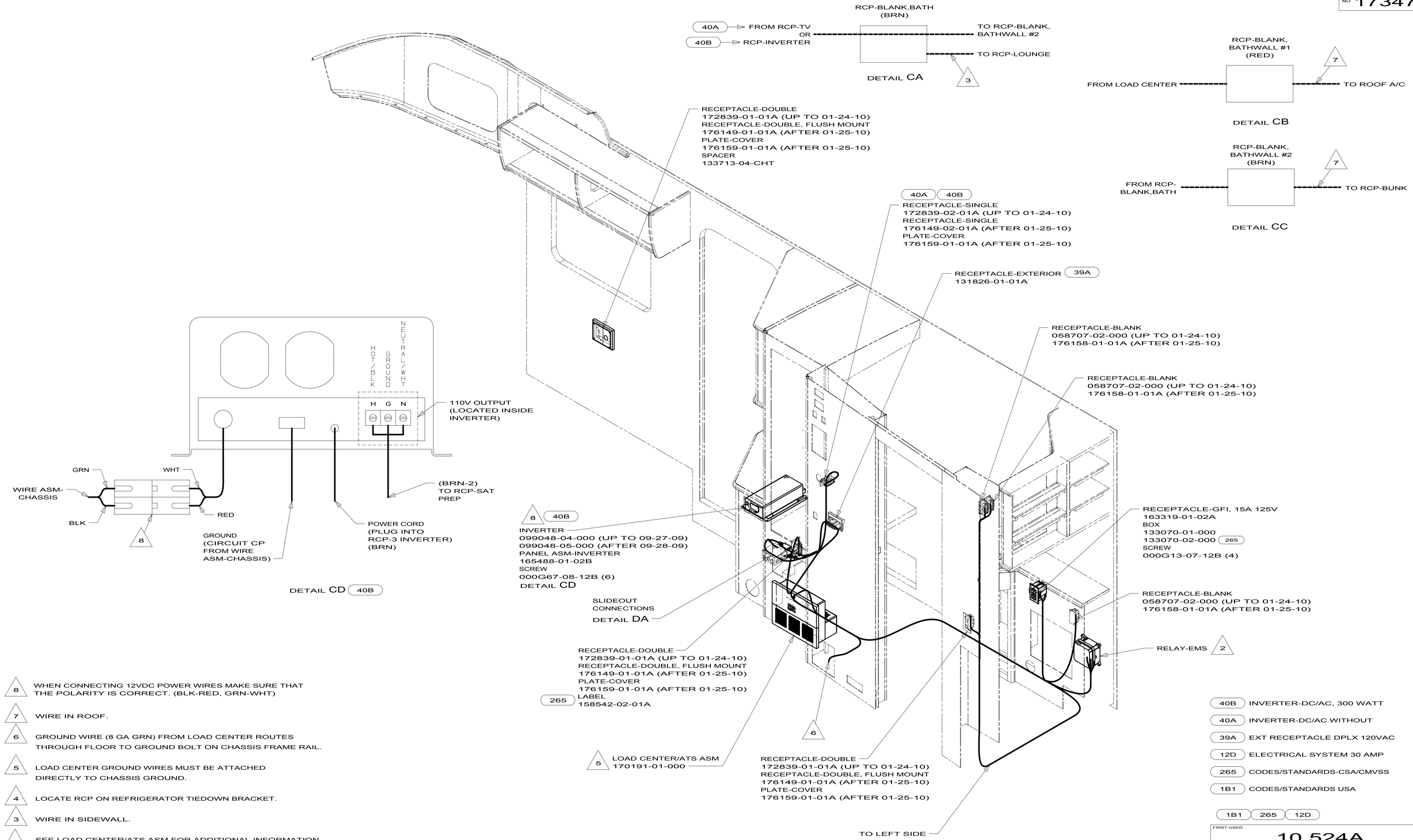

8 WHEN CONNECTING 12VDC POWER WIRES MAKE SURE THAT THE POLARITY IS CORRECT. (BLK-RED, GRN-WHT)

7 WIRE IN ROOF.

6 GROUND WIRE (8 GA GRN) FROM LOAD CENTER ROUTES THROUGH FLOOR TO GROUND BOLT ON CHASSIS FRAME RAIL.

5 LOAD CENTER GROUND WIRES MUST BE ATTACHED DIRECTLY TO CHASSIS GROUND.

4 LOCATE RCP ON REFRIGERATOR TIEDOWN BRACKET.

3 WIRE IN SIDEWALL.

2 SEE LOAD CENTER/ATS ASM FOR ADDITIONAL INFORMATION.

1. ALL WIRES TO BE SECURED WITH CLAMP 10495-01-000 OR CLIP 80734-01-000 EVERY 600MM. USE SCREW G67-10-12B UNLESS OTHERWISE SPECIFIED.

NOTES:

40B INVERTER-DC/AC, 300 WATT
40A INVERTER-DC/AC WITHOUT
39A EXT RECEPTACLE DPLX 120VAC
12D ELECTRICAL SYSTEM 30 AMP
265 CODES/STANDARDS-CSA/CMVSS
1B1 CODES/STANDARDS USA

1B1 265 12D

FOR ELECTRICAL TORQUE SPECIFICATIONS SEE DWG NO. 128783-01-000

X-X FOR ELECTRICAL CALLOUTS SEE DWG NO. 121339-01-000

FIRST USED 10 524A

DO NOT SCALE DRAWING

TITLE: WIRING INSTL-BODY,110V

SHEET 3 PART NO 173477 REV

4/10/2010

DWG NO 173477

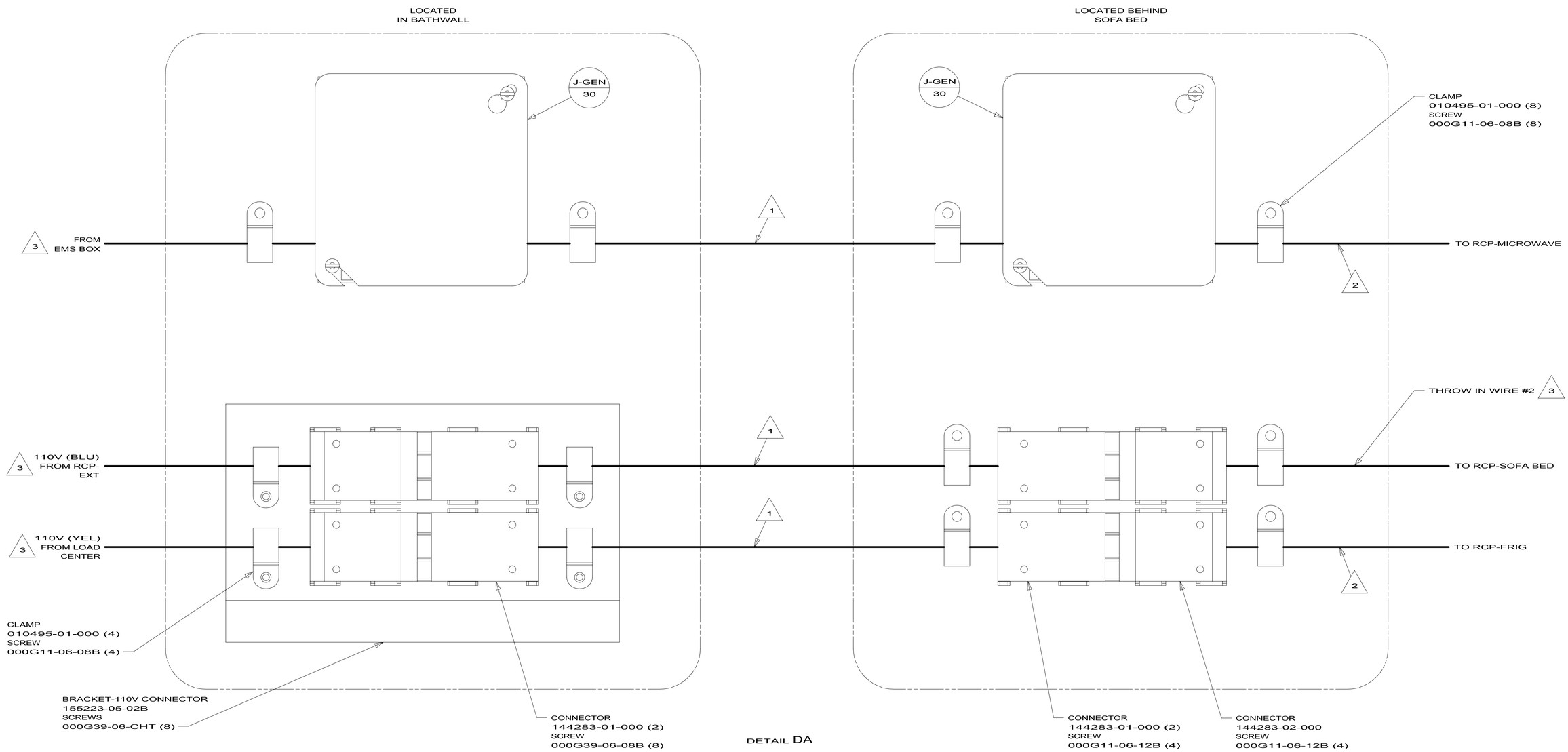

DETAIL DA

12D ELECTRICAL SYSTEM 30 AMP

265 CODES/STANDARDS-CSA/CMVSS

1B1 CODES/STANDARDS USA

3 SEE LOAD CENTER/ATS ASM FOR ADDITIONAL INFORMATION.

2 WIRE IN SIDEWALL.

1 FLEX CORDS ARE PART OF WIRE ASM-CHASSIS.

NOTES:

FOR ELECTRICAL TORQUE SPECIFICATIONS SEE DWG NO. 128783-01-000

X-X FOR ELECTRICAL CALLOUTS SEE DWG NO. 121339-01-000

1B1 265 12D

FIRST USED 10 524A

DO NOT SCALE DRAWING

TITLE: WIRING INSTL-BODY,110V

SHEET 4 PART NO 173477 REV

4/10/2010

083208-07-000

KEY	PART NUMBER	U/M	DESCRIPTION	VENDOR NO.
	083208-06-701	EA	CONVERTER ONLY (LOWER UNIT)	7345R

COPYRIGHT © 2009 WINNEBAGO INDUSTRIES INC.

		524A	524K	524J	524P	524DL	
GROUND	8-G	136145-06-015	136145-06-015	136145-06-025	136145-06-016	136145-06-030	
WIRE ASM 110V US		168093-01-000	170212-01-000	166954-01-000	173211-01-000	165192-01-000	
WIRE ASM 110V CA		168093-02-000	170212-02-000	166954-02-000	173211-02-000	165192-02-000	
GENEARATOR CABLE ASM	UL	-----	-----	136137-01-047 (52G)	-----	136137-01-050 (52G)	
	CA	-----	-----	136138-01-047 (52G)	-----	136138-01-050 (52G)	
GENEARATOR CABLE ASM	UL	164957-02-033	164957-02-042	164957-02-050	164957-02-042	164957-02-060	(33F)
	CA	164957-04-033	164957-04-042	164957-04-050	164957-04-042	164957-04-060	(33F)
THROW IN WIRE #1	UL	136135-09-030	136135-09-012	136135-09-063	136135-09-033	136135-09-012	(53B)
	CA	136136-09-030	136136-09-012	136136-09-063	136136-09-033	136136-09-012	(53B)
THROW IN WIRE #2	UL	136131-02-006 (6)	136131-19-030 (1L9)	136131-19-030 (1L9)	136131-19-030 (1L9)	136131-03-040 (6)	
	CA	136134-02-006 (6)	136134-19-030 (1L9)	136134-19-030 (1L9)	136134-19-030 (1L9)	136134-03-040 (6)	
THROW IN WIRE #3	UL	-----	136131-19-010 (40B)	136131-03-006 (6)	136131-19-090 (1MH)	136131-03-022 (6)	
	CA	-----	136134-19-010 (40B)	136134-03-006 (6)	136134-19-090 (1MH)	136134-03-022 (6)	
THROW IN WIRE #4	UL	-----	-----	-----	136131-19-040 (40B)	-----	
	CA	-----	-----	-----	136134-19-040 (40B)	-----	
THROW IN WIRE #5	UL	-----	-----	-----	136131-03-003 (6)	-----	
	CA	-----	-----	-----	136134-03-003 (6)	-----	
SLIDEOUT WIRE #1		-----	136151-02-016 (7)	-----	-----	136151-03-020 (7)	
SLIDEOUT WIRE #2		-----	136152-06-016	-----	-----	-----	

RELEASE	REV A	DATE	DWG NO 170191
REV	ZONE	REVISION RECORD	DATE	DFTR-ORIG

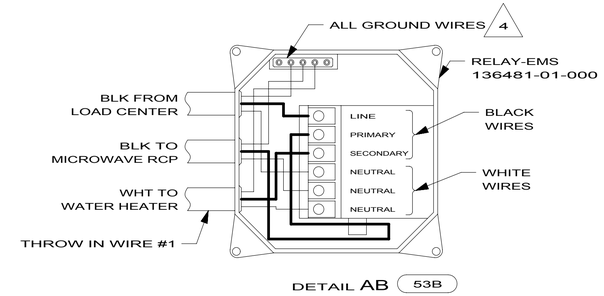

DETAIL AB (53B)

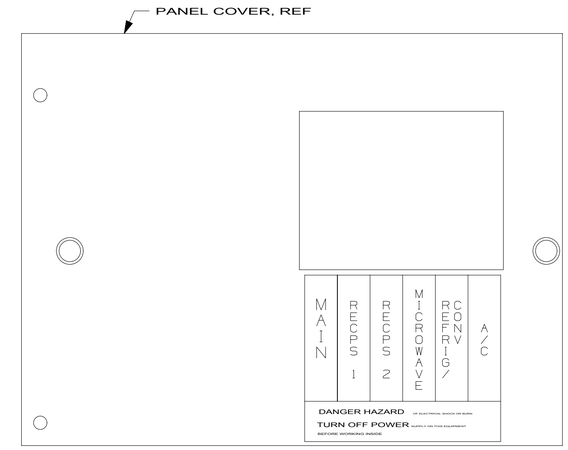

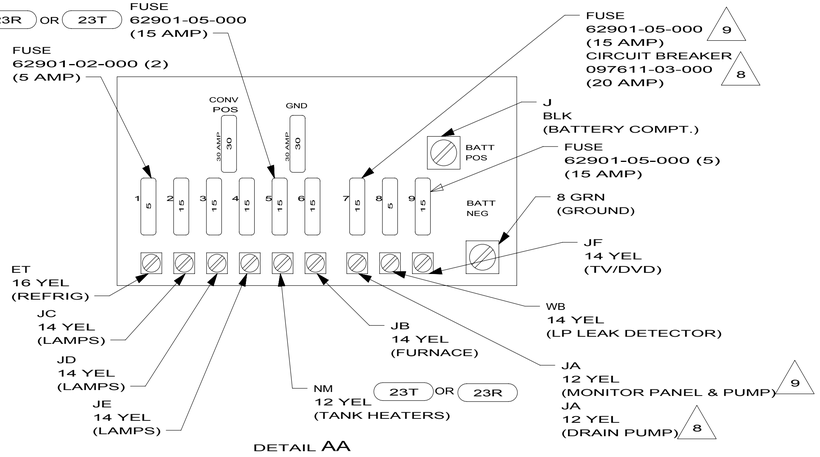

DETAIL AA

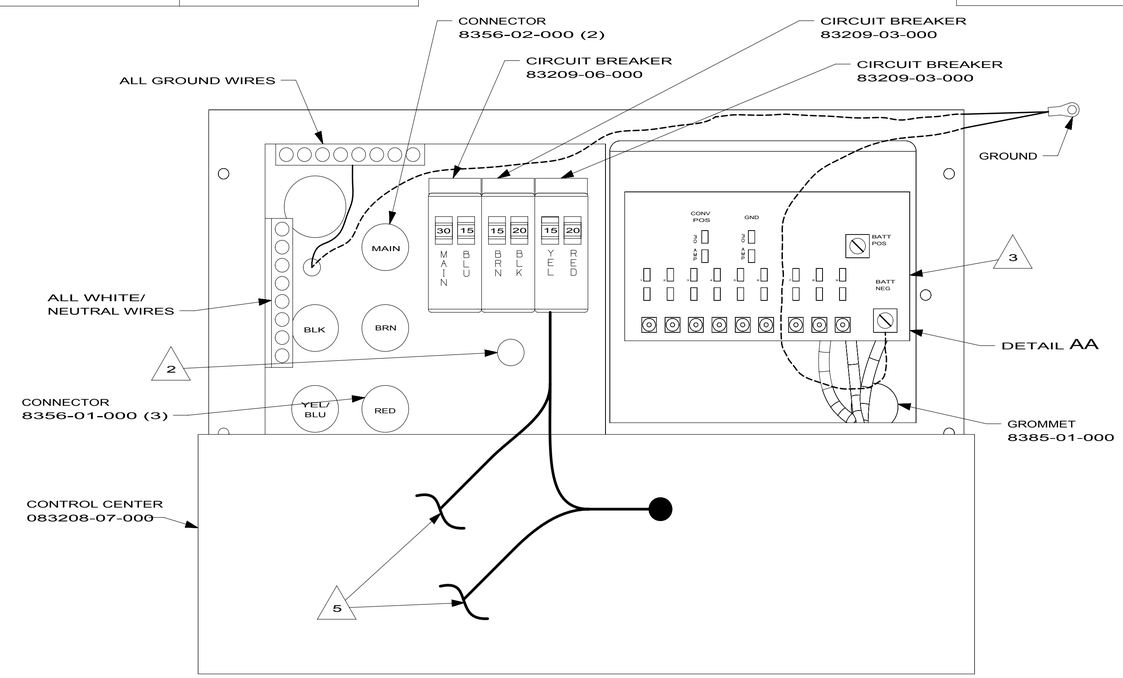

(40B)	INVERTER-DC/AC, 300 WATT
(53B)	WTR HTR-6GAL ELECTRIC/LP GAS
(52G)	GEN-3.6KW ONAN LP MICROQUIET
(40B)	INVERTER-DC/AC, 300 WATT
(33F)	GEN-3.5 KW ONAN DIESEL
(265)	CODES/STANDARDS-CSA/CMVSS
(23R)	DRAINAGE SYSTEM/HEAT-PREWIRE
(1MH)	TV (FRONT)-20" COLOR, STEREO
(1L9)	ENTERTAINMENT CENTER-CABOVER
(1B1)	CODES/STANDARDS USA

(1B1) (265)

(7) FOR CONNECTION INSTALLATIONS SEE DETAIL BE.

(6) FOR CONNECTION INSTALLATIONS SEE DETAIL BB.

(5) CONNECT CONVERTER POWER CIRCUIT INTO YELLOW BREAKER AND USE SUPPLIED WIRE NUT TO CONNECT YELLOW CIRCUIT.

(4) ALL GROUND WIRE TO BE COVERED WITH TUBING 8041-02-000.

(3) SEE WIRING INSTL-BODY,12V FOR ADDITIONAL INFORMATION.

(2) SECURE WIRES TO BACKSIDE OF LOAD CENTER WITH WIRE TIE 116673-01-000.

1. ALL GROUND WIRES TO BE COVERED WITH TUBING 8041-02-000.

NOTES:

(9) USED ON 524A, 524J, 524K, 524P ONLY.

(8) USED ON 524DL ONLY.

FOR ELECTRICAL TORQUE SPECIFICATIONS SEE DWG NO. 128783-01-000

(X-X) FOR ELECTRICAL CALLOUTS SEE DWG NO. 121339-01-000

WINNEBAGO INDUSTRIES
COPYRIGHT 2009
WINNEBAGO
INDUSTRIES, INC.

DFTR	ORIG. DATE
CHKR	ALL DIMENSIONS ARE IN MILLIMETERS
P.E.	
M.E.	FIRST USED
DSNR	10 500-SERIES

UNSPECIFIED TOLERANCES ARE:
WHOLE DIM (X) : 3
ONE-PLACE (X.X) : 1.5
TWO-PLACE (X.XX) : 0.50
ANGLE : 1°

MATERIAL:

THIRD ANGLE PROJECTION

DO NOT SCALE DRAWING

TITLE: LOAD CENTER/ATS ASM

SHEET 1 OF 2 | PART NO 170191 | REV

REF: 1

DWG NO 170191

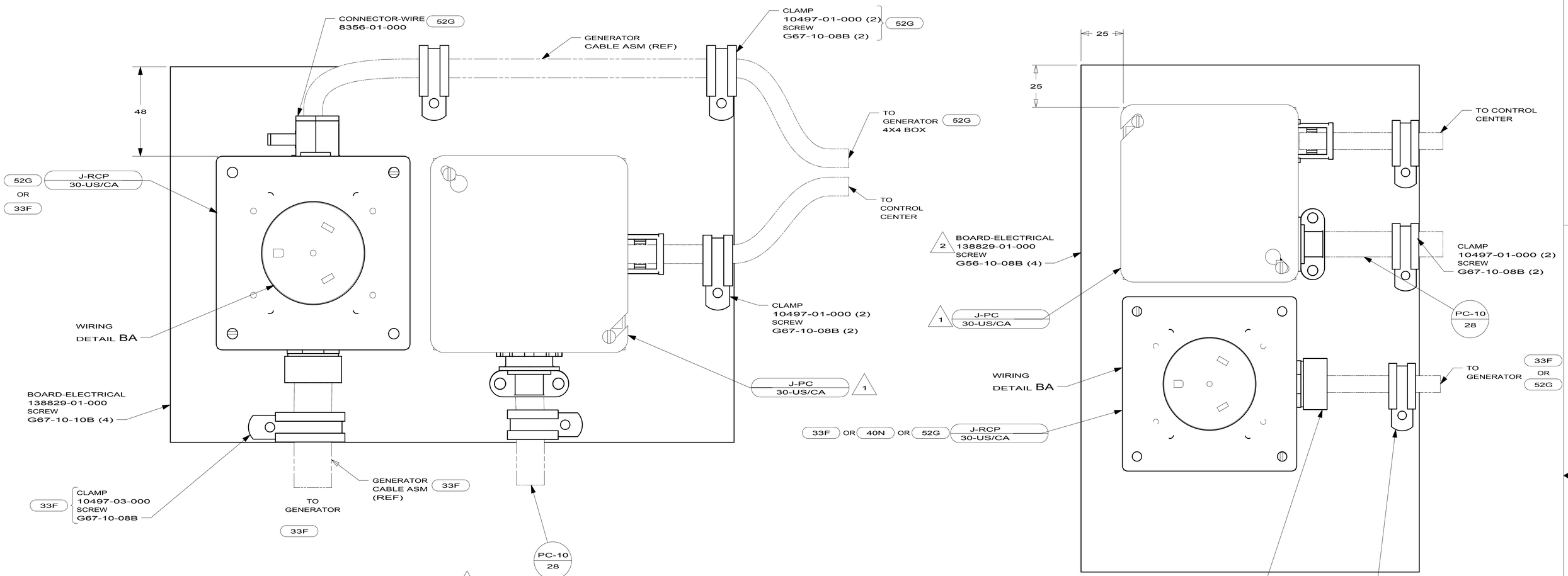

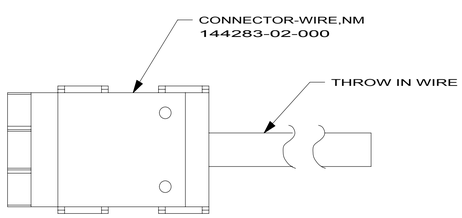

DETAIL BB

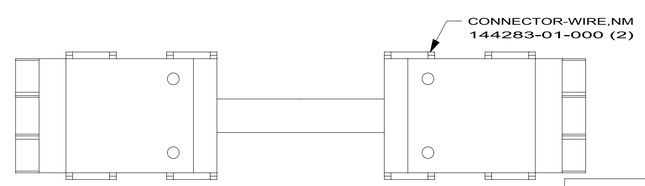

DETAIL BE

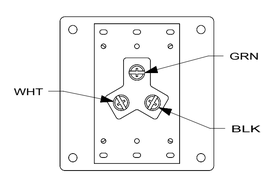

DETAIL BA
(BACK VIEW)

X-X	FOR ELECTRICAL CALLOUTS SEE DWG NO. 121339-01-000

FOR ELECTRICAL TORQUE SPECIFICATIONS SEE DWG NO. 128783-01-000

33F	GEN-3.5 KW ONAN DIESEL
52G	GEN-3.6KW ONAN LP MICROQUIET
265	CODES/STANDARDS-CSA/CMVSS
1B1	CODES/STANDARDS USA

1B1 265

FIRST USED

10 500-SERIES

DO NOT SCALE DRAWING

TITLE: LOAD CENTER/ATS ASM

SHEET 2 | PART NO 170191 | REV

NOTES:

4. USED ON 524J AND 524DL ONLY.
3. USED ON 524K AND 524P AND 524A ONLY.
2. SCREW INTO BACKSIDE OF BOARD THRU PANEL DURING INSTALLATION.
1. CONNECT BLK TO BLK, WHT TO WHT, AND GRNDS TO GRNDS.

RELEASE	REV A	DATE	DWG NO 173476

REV	ZONE	REVISION RECORD	DATE	DFTR-ORIG

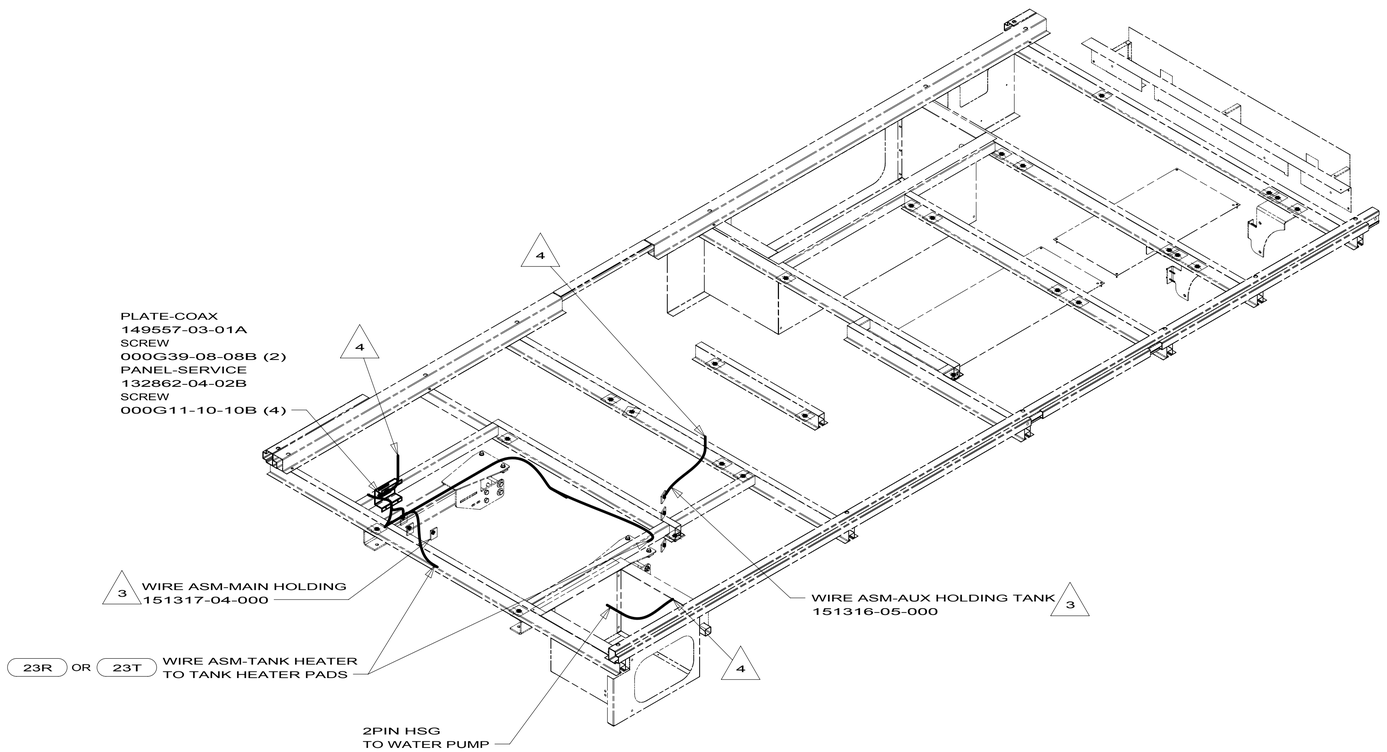

23R DRAINAGE SYSTEM/HEAT-PREP

23T DRAINAGE SYSTEM-HEATED

265 CODES/STANDARDS-CSA/CMVSS

1B1 CODES/STANDARDS USA

1B1 265

4 WIRE PASSES THROUGH FLOOR IN THIS AREA.

3 PLACE CROSS LOCATOR ON SENSORS OVER DIMPLES ON TANK.

2. ROUTE TANK SENSOR WIRES SO THEY DO NOT PASSOVER SENSORS. USE WIRE TIE MOUNT 155366-01-000 AND WIRE TIE 008343-01-000 AS NEEDED. TANK SURFACE MUST BE CLEANED USING ISOPROPYL ALCOHOL AND PRIMED WITH PRIMER 94.

1. ALL WIRES TO BE SECURED WITH CLAMP 010495 OR 010497 OR WIRE TIE 008343 OR 108046 EVERY 600MM, USE SCREW 000G67-XX-XXX OR 000G56-XX-XXX AS APPROPRIATE FOR INSTALLATION.

NOTES:

FOR ELECTRICAL TORQUE SPECIFICATIONS SEE DWG NO. 128783-01-000

X-X FOR ELECTRICAL CALLOUTS SEE DWG NO. 121339-01-000

WINNEBAGO INDUSTRIES

COPYRIGHT 2010
WINNEBAGO
INDUSTRIES, INC.

DFTR	ORIG. DATE
CHKR	ALL DIMENSIONS ARE IN MILLIMETERS
P.E.	
M.E.	FIRST USED
DSNR	10 524A

UNSPECIFIED TOLERANCES ARE:
WHOLE DIM (X) :
ONE-PLACE (X.X) :
TWO-PLACE (X.XX) :
ANGLE :

MATERIAL:

THIRD ANGLE PROJECTION

DO NOT SCALE DRAWING

TITLE: WIRING INSTL-BODY,12V

SHEET 1 OF 6 | PART NO 173476 | REV

REF: 1

4/9/2010

DWG NO 173476

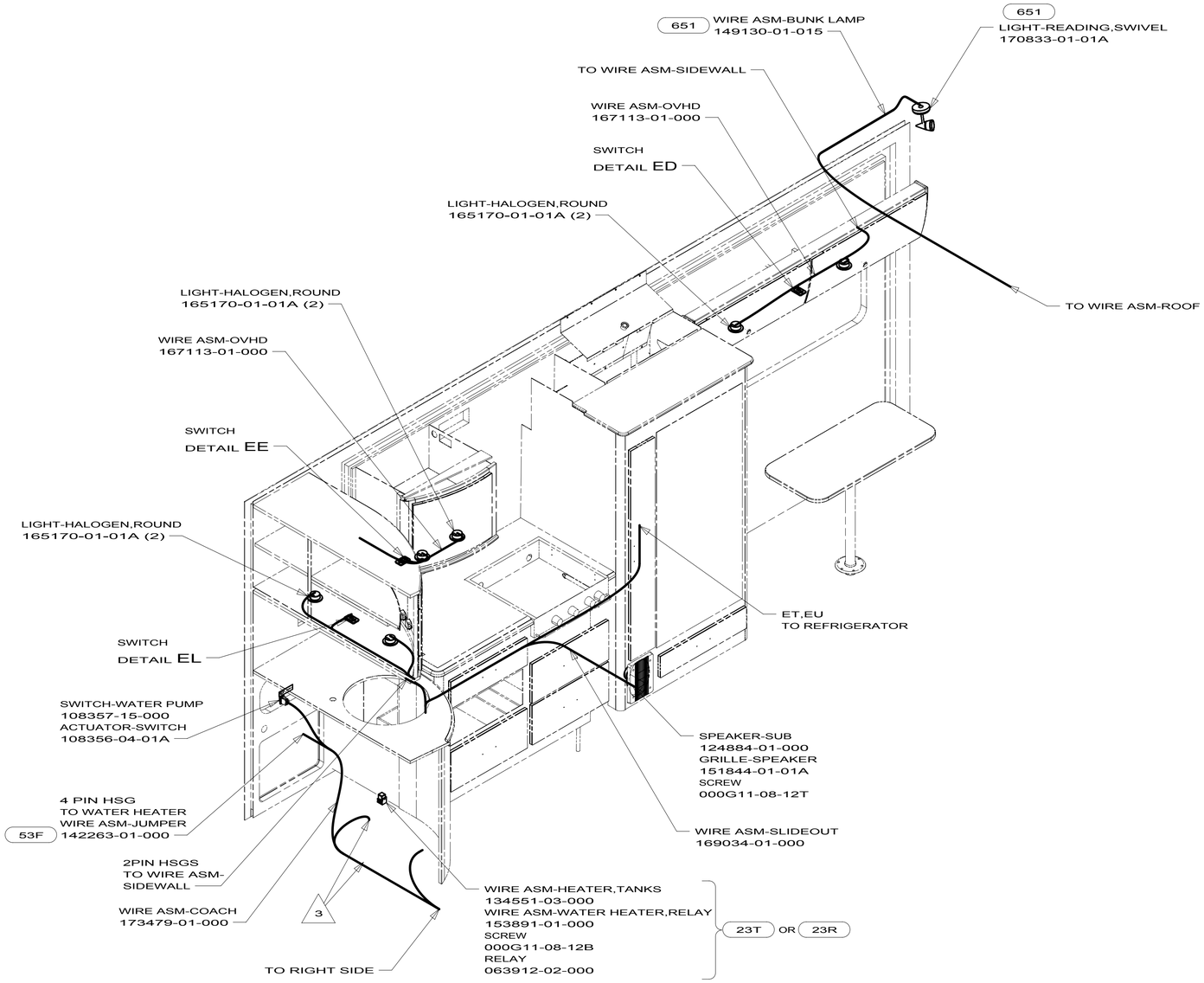

651	BUNK FRONT OVERHEAD-SINGLE
23R	DRAINAGE SYSTEM/HEAT-PREWIRE
23T	DRAINAGE SYSTEM-HEATED
265	CODES/STANDARDS-CSA/CMVSS
1B1	CODES/STANDARDS USA

NOTES:

1. ALL WIRES TO BE CLAMPED WITH CLAMP 010495 OR 010497 OR WIRE TIE 008343 OR 108046 EVERY 600MM, USE SCREW 000G67-XX-XXXX OR 000G65-XX-XXX AS APPROPRIATE FOR INSTALLLATION.
2. SEE WIRING DIAGRAM-BODY,12V FOR ADDITIONAL INFORMATION.

3 WIRE PASSES THROUGH FLOOR AT THIS POINT.

4 PANEL SUPPLIED WITH GENERATOR.

FOR ELECTRICAL TORQUE SPECIFICATIONS SEE DWG NO. 128783-01-000

X-X FOR ELECTRICAL CALLOUTS SEE DWG NO. 121339-01-000

1B1 265

FIRST USED 10 524A

DO NOT SCALE DRAWING

TITLE: WIRING INSTL-BODY,12V

SHEET 2 PART NO 173476 REV

4/9/2010

DWG NO 173476

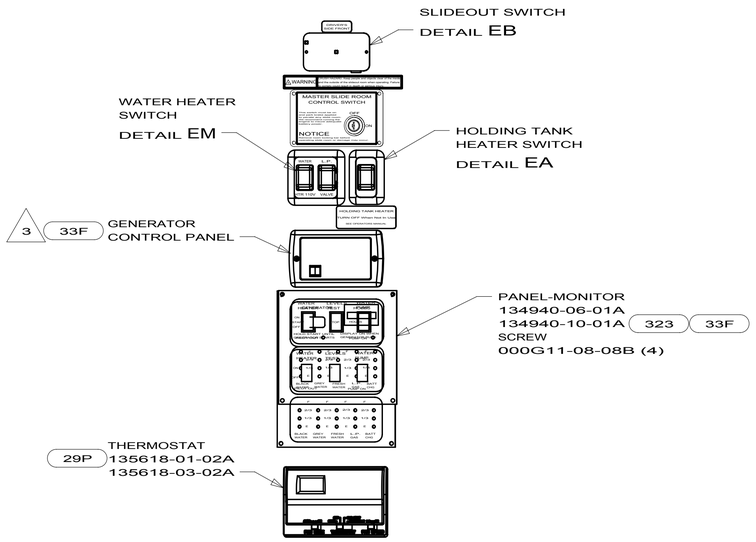

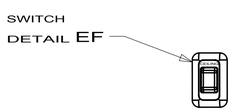

DETAIL CA

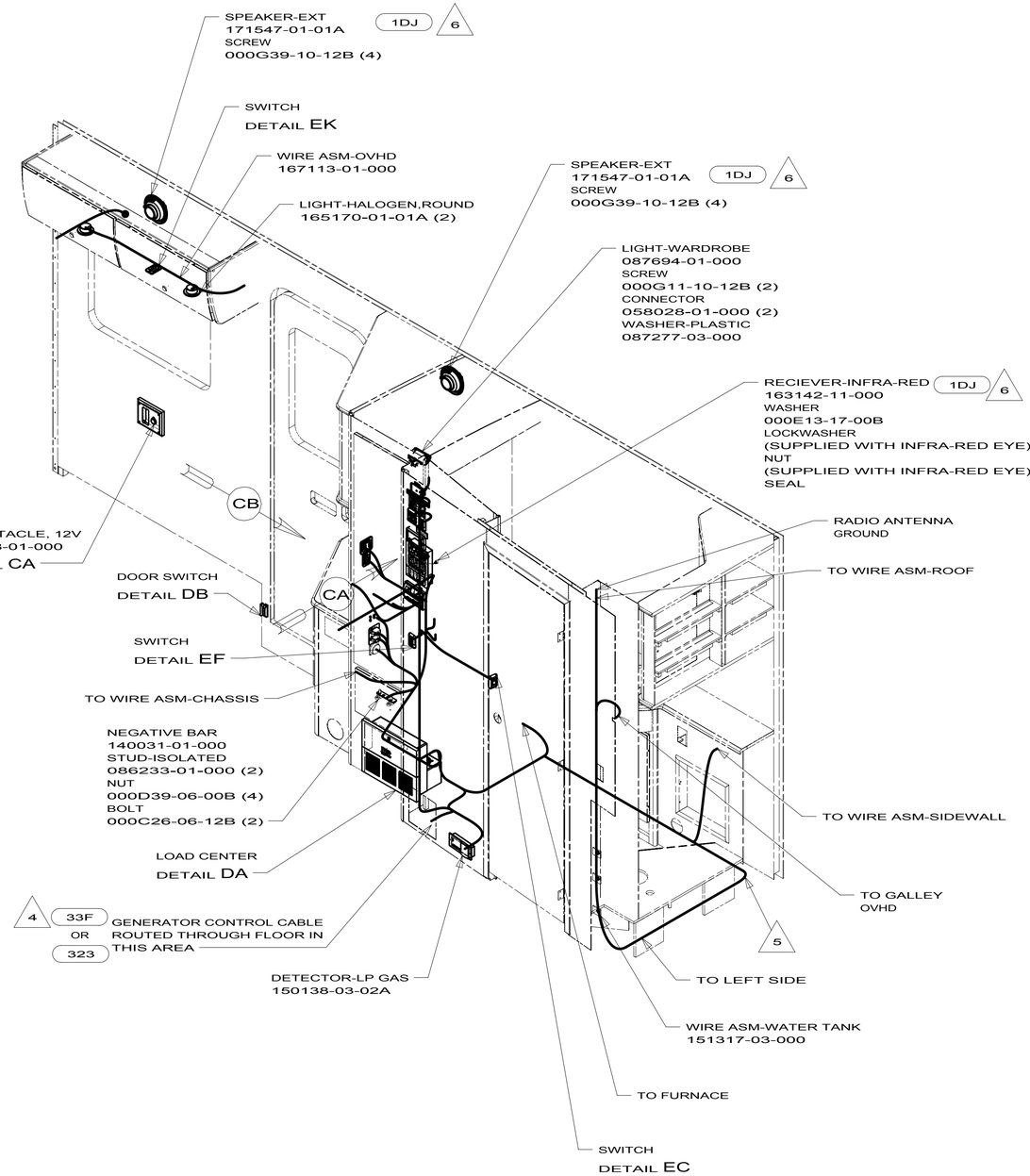

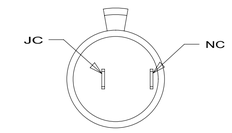

DETAIL CC

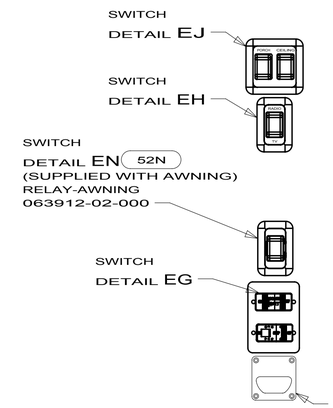

VIEW CB

6 MOUNTED ON EXTERIOR SURFACE OF SIDEWALL.

5 WIRE PASSES THROUGH FLOOR IN THIS AREA.

4 WITH FEATURE 33F CABLE IS SUPPLIED WITH GENERATOR.

3 SUPPLIED WITH GENERATOR.

2. SEE WIRING DIAGRAM-BODY,12V FOR ADDITIONAL INFORMATION.

1. ALL WIRES TO BE CLAMPED WITH CLAMP 010495 OR 010497 OR WIRE TIE 008343 OR 108046 EVERY 600MM, USE SCREW 000G67-XX-XXX OR 000G56-XX-XXX AS APPROPRIATE FOR INSTALLATION.

NOTES:

52N	AWNING-PATIO,ELECTRIC
1DJ	EXTERIOR SPEAKER SYSTEM
321	GENERATOR PREP KIT
323	GENERATOR PREP KIT - DIESEL
33F	GEN-3.5 KW ONAN DIESEL
29P	AC HEAT PUMP-1 HI EFFICIENCY
1H3	A/C ROOF-HI EFF LOW PROFILE
265	CODES/STANDARDS-CSA/CMVSS
1B1	FEATURE NOTE

FOR ELECTRICAL TORQUE SPECIFICATIONS SEE DWG NO. 128783-01-000

X-X FOR ELECTRICAL CALLOUTS SEE DWG NO. 121339-01-000

1B1 265

FIRST USED 10 524A

DO NOT SCALE DRAWING

TITLE: WIRING INSTL-BODY,12V

SHEET 3 PART NO 173476 REV

4/9/2010

DWG NO 173476

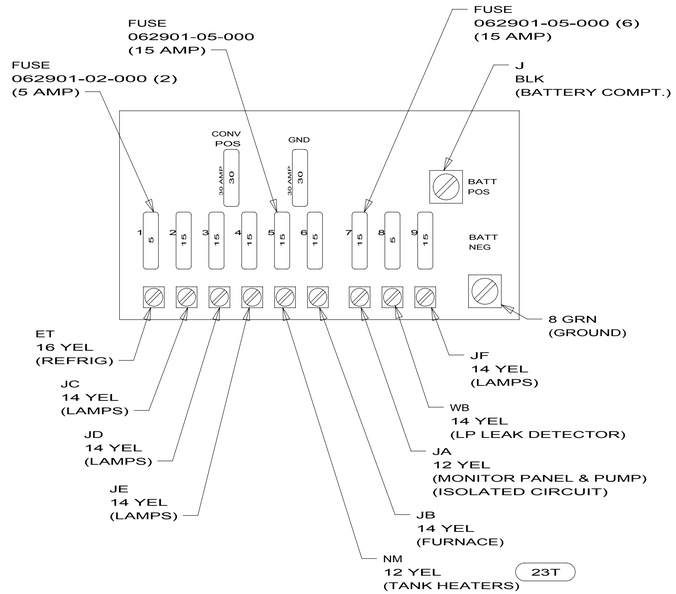

DETAIL DA 3

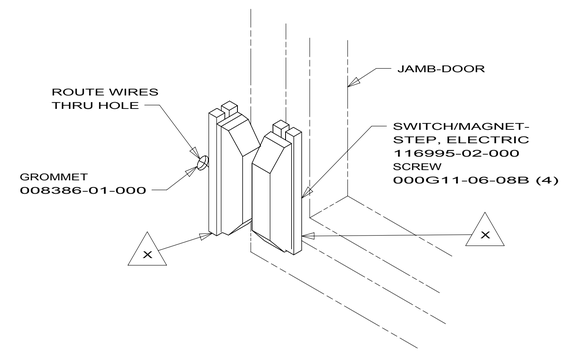

DETAIL DB

651	BUNK FRONT OVERHEAD-SINGLE
23T	DRAINAGE SYSTEM-HEATED
1LK	TV-19"DC,COLOR,LCD W/REMOTE
1E2	ENTRANCE STEP-ELEC.
265	CODES/STANDARDS-CSA/CMVSS
1B1	CODES/STANDARDS USA

NOTES:

3. FOR REFERENCE ONLY. SEE LOAD CENTER/ATS ASM FOR ADDITIONAL INFORMATION.

2. MOUNT MAGNET USING PILOT HOLES IN SCREEN DOOR FRAME. MOUNT WITH MAGNET TOWARD SWITCH.

1. MOUNT SWITCH AND SPACER TOBLOCK ON JAMB. ADJUST HEIGHT AND MATCH MAGNET.

FOR ELECTRICAL TORQUE SPECIFICATIONS SEE DWG NO. 128783-01-000

X-X FOR ELECTRICAL CALLOUTS SEE DWG NO. 121339-01-000

1B1 265

FIRST USED 10 524A

DO NOT SCALE DRAWING

TITLE: WIRING INSTL-BODY,12V

SHEET 4 | PART NO 173476 | REV

4/9/2010

DWG NO 173476

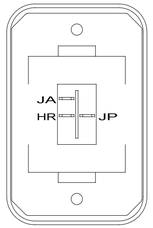

SWITCH-BLANK
138253-01-02A (1)
SWITCH-ROCKER
135740-06-01A (23T) OR (23R)
SWITCH-BASE
135741-01-01A
SWITCH-BEZEL
135742-01-01A
SCREW
000G11-08-08B (2)
LABEL-SWITCH
134563-01-02A (23T) OR (23R)

HOLDING TANK HEATER
TURN OFF When Not In Use
SEE OPERATORS MANUAL

DETAIL EA

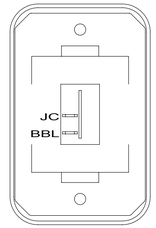

SWITCH-ROCKER
135740-01-01A
SWITCH-BASE
135741-01-01A
SWITCH-BEZEL
135742-01-01A
SCREW
000G11-08-08B (2)

DETAIL ED

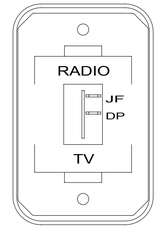

SWITCH-ROCKER
135740-01-01A
SWITCH-BASE
135741-01-01A
SWITCH-BEZEL
135742-40-02A
SCREW
000G11-08-08B (2)

DETAIL EH

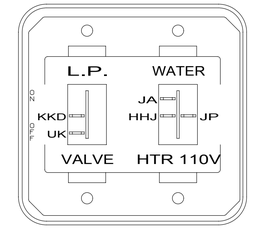

SWITCH-ROCKER
135740-01-01A
135740-06-01A (53B)
SWITCH-BLANK
138253-01-02A (53F)
SWITCH-BASE
135741-02-01A
SWITCH-BEZEL
135742-34-02A
SCREW
000G11-08-08B (4)

DETAIL EM

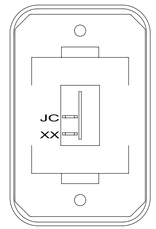

SWITCH-ROCKER
135740-01-01A
SWITCH-BASE
135741-01-01A
SWITCH-BEZEL
135742-01-01A
SCREW
000G11-08-08B (2)

DETAIL EE

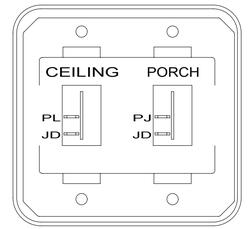

SWITCH-ROCKER
135740-01-01A (2)
SWITCH-BASE
135741-02-01A
SWITCH-BEZEL
135742-19-02A
SCREW
000G11-08-08B (4)

DETAIL EJ

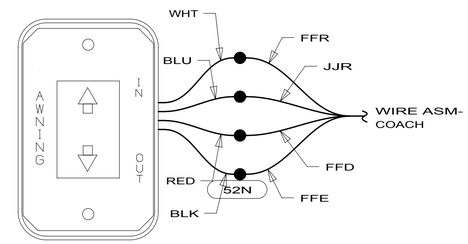

DETAIL EN
(SUPPLIED WITH AWNING)

LABEL
163992-01-000
SWITCH-SLIDEOUT
165169-03-000
SCREW
076790-05-000

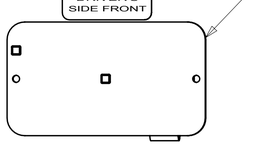

LABEL-WARNING
116549-01-000

WARNING CRUSH HAZARD. Keep people and objects clear of the inside and the outside of the slideout room when operating. Failure to comply could result in death or serious injury.

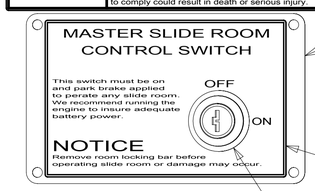

PLATE-KEY, SLIDE ROOM
163987-01-02B
SCREW
076790-05-000 (4)

LABEL-SLIDROOM CONTROL, MAN
163988-01-01A

SWITCH-KEY,SPST-ILLINOIS LCK
163097-01-000
(CONNECTS TO CIRCUITS DT & ER)

DETAIL EB
(FRONT VIEW)

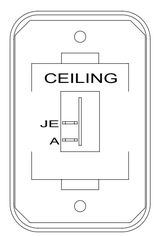

SWITCH-ROCKER
135740-01-01A
SWITCH-BASE
135741-01-01A
SWITCH-BEZEL
135742-07-02A
SCREW
000G11-08-08B (2)

DETAIL EF

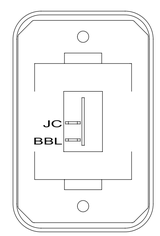

SWITCH-ROCKER
135740-01-01A
SWITCH-BASE
135741-01-01A
SWITCH-BEZEL
135742-01-01A
SCREW
000G11-08-08B (2)

DETAIL EK

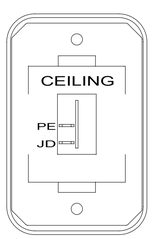

SWITCH-ROCKER
135740-01-01A
SWITCH-BASE
135741-01-01A
SWITCH-BEZEL
135742-07-02A
SCREW
000G11-08-08B (2)

DETAIL EC

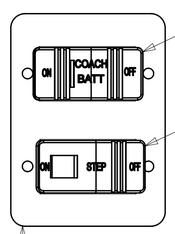

SWITCH-BATTERY
108357-17-000
ACTUATOR
108356-19-01A
(CIRCUITS KF,LG
,LJ,LJ,KF,KF,LK

SWITCH-STEP
108357-19-000
(CIRCUITS ER,ES)

PLATE
098351-22-02A
SCREW
000G11-06-10B (4)

DETAIL EG

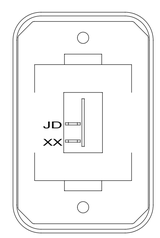

SWITCH-ROCKER
135740-01-01A
SWITCH-BASE
135741-01-01A
SWITCH-BEZEL
135742-01-01A
SCREW
000G11-08-08B (2)

DETAIL EL

52N	AWNING-PATIO,ELECTRIC
53F	WATER HEATER-ELEC. IGNITION
53B	WTR HTR-6GAL ELECTRIC/LP GAS
23T	DRAINAGE SYSTEM-HEATED
23R	DRAINAGE SYSTEM/HEAT-PREWIRE
1LK	TV-19"DC,COLOR,LCD W/REMOTE
1E2	ENTRANCE STEP-ELEC.
265	CODES/STANDARDS-CSA/CMVSS
1B1	CODES/STANDARDS USA

(1B1) (265)

(1) WITHOUT (23T) OR (23R)

NOTES:

FOR ELECTRICAL TORQUE SPECIFICATIONS SEE DWG NO. 128783-01-000

(X-X) FOR ELECTRICAL CALLOUTS SEE DWG NO. 121339-01-000

FIRST USED 10 524A

DO NOT SCALE DRAWING

TITLE: WIRING INSTL-BODY,12V

SHEET 5 | PART NO 173476 | REV

4/9/2010

DWG NO 173476

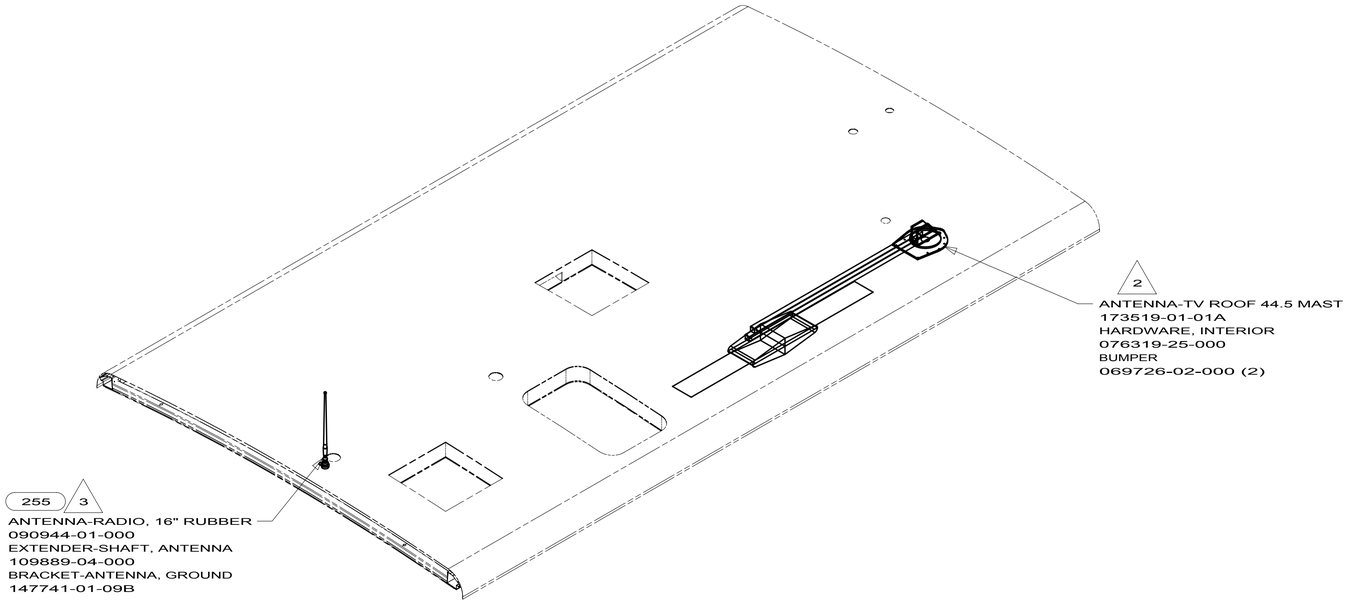

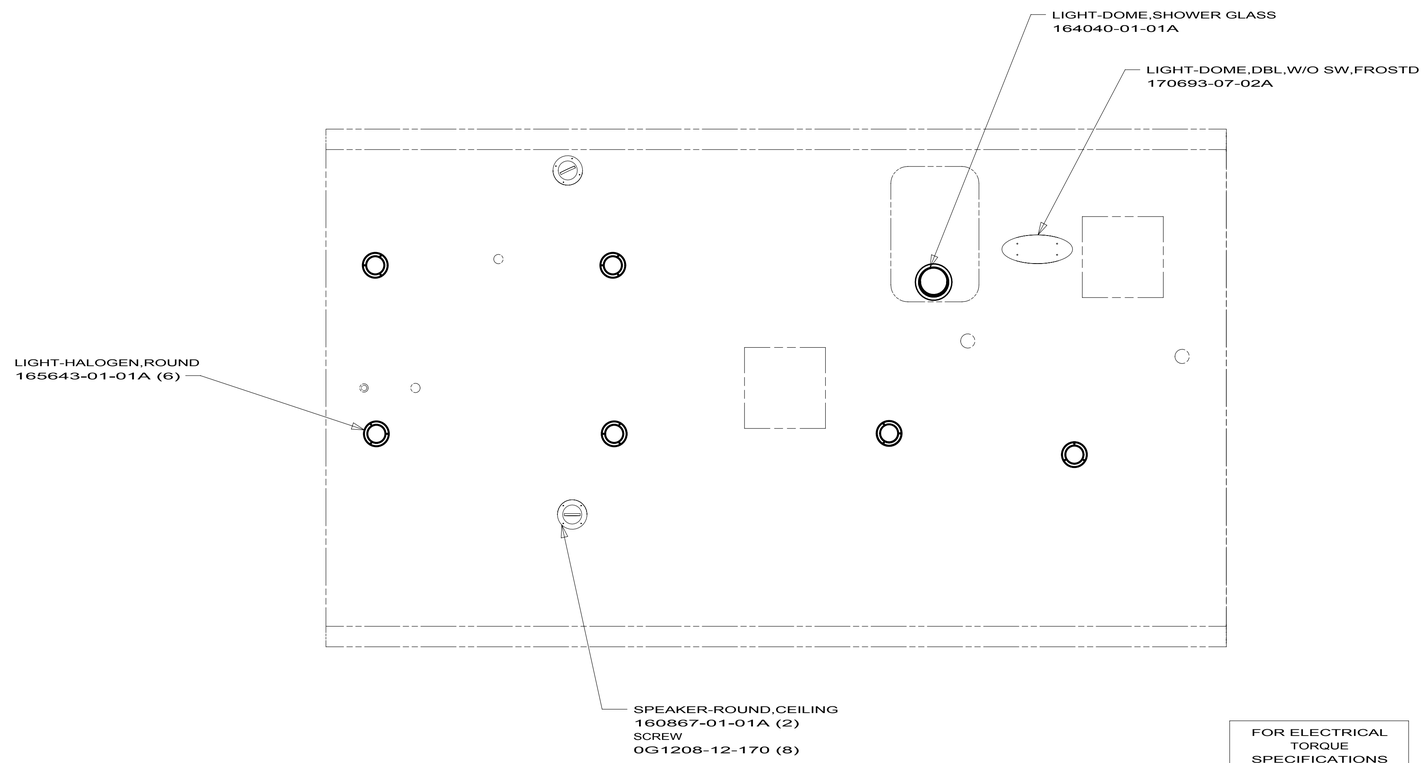

255 RADIO/AM/FM/CD/DVD, COACH

265 CODES/STANDARDS-CSA/CMVSS

1B1 CODES/STANDARDS USA

3 WRAP BRACKET LEGS AROUND ANTENNA BASE.

2 SEE ANTENNA INSTALLATION MANUAL FOR CORRECT INSTALLATION PROCEDURE.

1. SEE ROOF ASM FOR ADDITIONAL INFORMATION.

NOTES:

FOR ELECTRICAL TORQUE SPECIFICATIONS SEE DWG NO. 128783-01-000

X-X FOR ELECTRICAL CALLOUTS SEE DWG NO. 121339-01-000

1B1 265

FIRST USED 10 524A

DO NOT SCALE DRAWING

TITLE: WIRING INSTL-BODY,12V

SHEET 6 PART NO 173476 REV

4/9/2010

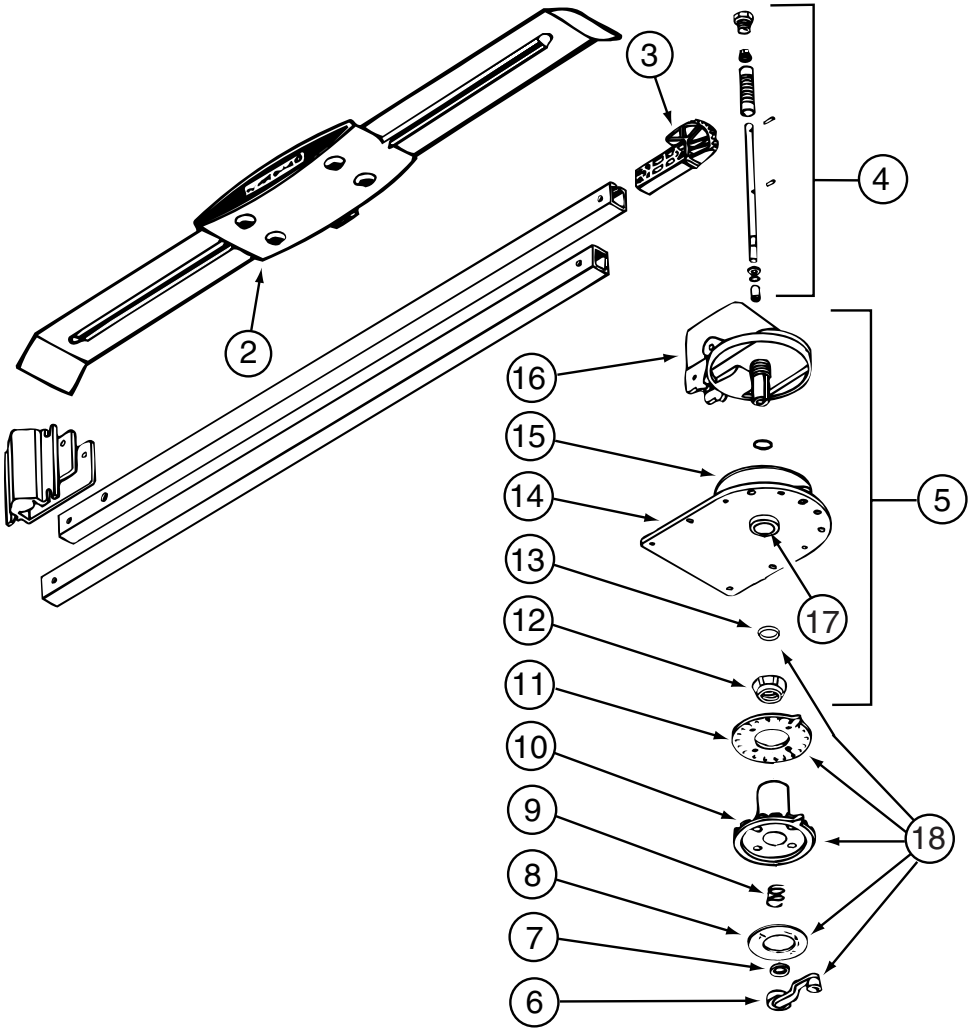

076319-25-000

KEY	PART NUMBER	U/M	DESCRIPTION	VENDOR NO.
6	076319-01-706	EA	CRANK-W/SET SCREW UNIV/BEIGE	2750897
6	120233-01-710	EA	HANDLE-CRANK W/SCREW - WHITE	RP-6795
8	076319-01-708	EA	DECAL-CRANK	5413002
10	076319-25-700	EA	DIRECTIONAL HANDLE(WHITE)	3200612
11	076319-25-701	EA	PLATE - CEILING(WHITE)	3200609
13	120233-01-709	EA	WASHER-NYLON	RP-2658

CONTACT WINNEBAGO PART SALES FOR UNLISTED COMPONENT(S)

COPYRIGHT © 2009 WINNEBAGO INDUSTRIES INC.

087694-01-000

KEY	PART NUMBER	U/M	DESCRIPTION	VENDOR NO.
	087694-01-700	EA	BULB	GE561

COPYRIGHT © 2009 WINNEBAGO INDUSTRIES INC.

108354-01-01A

KEY	PART NUMBER	U/M	DESCRIPTION	VENDOR NO.
	108354-01-700	EA	BULB-COURTESY LIGHT	395-B

COPYRIGHT © 2009 WINNEBAGO INDUSTRIES INC.

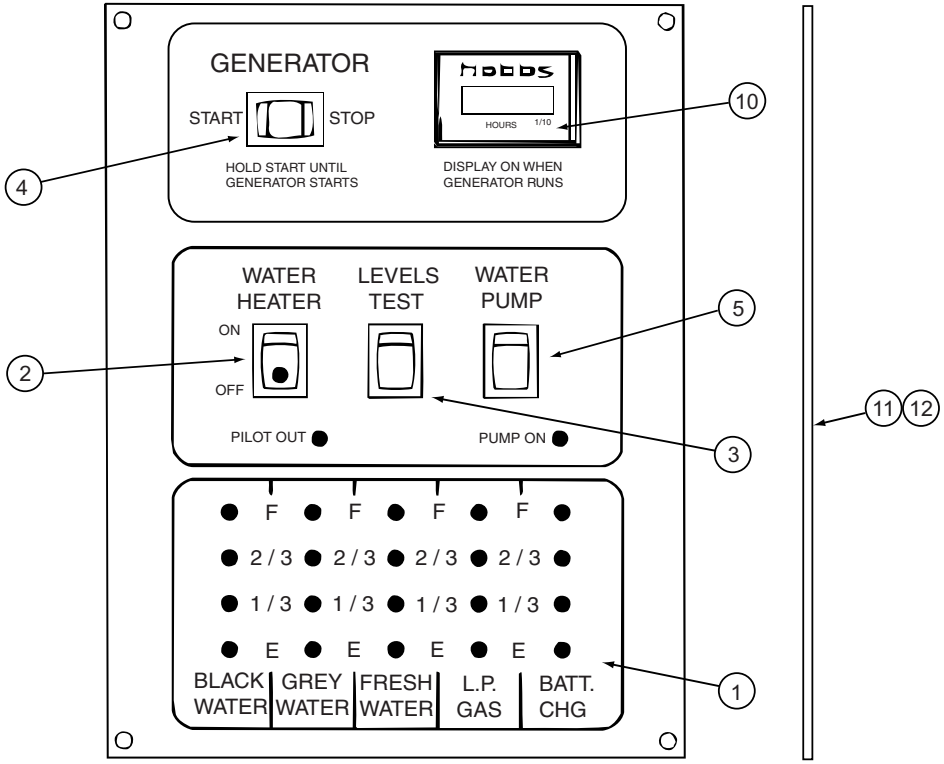

134940-06-01A

KEY	PART NUMBER	U/M	DESCRIPTION	VENDOR NO.
1	134940-01-702	EA	CHASSIS - SILKSCREENED	CC0558-00
2	134940-01-701	EA	SWITCH-SPST/ON-OFF/BLK W/LGT	L0109
3	096983-01-701	EA	SWITCH - SPST/MOM 2 TERMINAL	L0111-00
4	096983-01-702	EA	SWITCH - MOM/OFF/MOM/3 TERM	L0112-00
5	096983-01-703	EA	SWITCH - ON/ON	L0115-00
10	100258-10-701	EA	GAUGE-HR METER ONLY (LCD)	L0775-00
11	134940-06-700	EA	PC BOARD - SENSOR SYSTEM/RED	L5131-02
			CONTACT WINNEBAGO PART SALES FOR UNLISTED COMPONENT(S)	

134940-07-01A

KEY	PART NUMBER	U/M	DESCRIPTION	VENDOR NO.
1	134940-01-702	EA	CHASSIS - SILKSCREENED	CC0558-00
2	134940-01-701	EA	SWITCH-SPST/ON-OFF/BLK W/LGT	L0109
3	096983-01-701	EA	SWITCH - SPST/MOM 2 TERMINAL	L0111-00
4	096983-01-703	EA	SWITCH - ON/ON	L0115-00
5	134940-02-700	EA	SWITCH - DUMMY	L0118
11	134940-06-700	EA	PC BOARD - SENSOR SYSTEM/RED	L5131-02
			CONTACT WINNEBAGO PART SALES FOR UNLISTED COMPONENT(S)	

COPYRIGHT © 2009 WINNEBAGO INDUSTRIES INC.

134940-08-01A

KEY	PART NUMBER	U/M	DESCRIPTION	VENDOR NO.
1	134940-04-700	EA	CHASSIS - SILKSCREENED	CE0136-00
2	134940-01-701	EA	SWITCH-SPST/ON-OFF/BLK W/LGT	L0109
3	096983-01-701	EA	SWITCH - SPST/MOM 2 TERMINAL	L0111-00
4	096983-01-702	EA	SWITCH - MOM/OFF/MOM/3 TERM	L0112-00
5	096983-01-703	EA	SWITCH - ON/ON	L0115-00
10	100258-10-701	EA	GAUGE-HR METER ONLY (LCD)	L0775-00
11	134940-06-700	EA	PC BOARD - SENSOR SYSTEM/RED	L5131-02
12	134940-04-701	EA	BOARD - PC - SOLAR LIGHT	L5121-01
			CONTACT WINNEBAGO PART SALES FOR UNLISTED COMPONENT(S)	

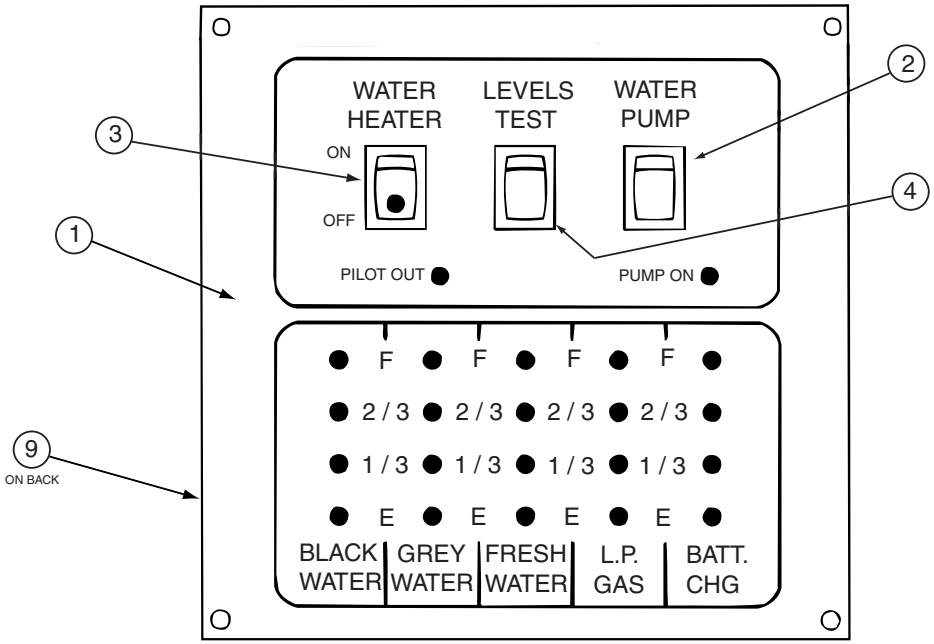

134940-10-01A

KEY	PART NUMBER	U/M	DESCRIPTION	VENDOR NO.
1	134940-10-700	EA	SILKSCREENED CHASSIS	CE0129-00
2	096983-01-703	EA	SWITCH - ON/ON	L0115-00
3	134940-01-701	EA	SWITCH-SPST/ON-OFF/BLK W/LGT	L0109
4	096983-01-701	EA	SWITCH - SPST/MOM 2 TERMINAL	L0111-00
9	134940-06-700	EA	PC BOARD - SENSOR SYSTEM/RED	L5131-02
			CONTACT WINNEBAGO PART SALES FOR UNLISTED COMPONENT(S)	

COPYRIGHT © 2009 WINNEBAGO INDUSTRIES INC.

163097-01-000

KEY	PART NUMBER	U/M	DESCRIPTION	VENDOR NO.
	163097-01-700	EA	KEY - #2382 (ILLINOIS LOCK)	2382
	163097-01-701	EA	KEY - #2341 (MILLER DIAL)	PART SALES

COPYRIGHT © 2009 WINNEBAGO INDUSTRIES INC.

165643-01-01A

KEY	PART NUMBER	U/M	DESCRIPTION	VENDOR NO.
	165643-01-700	EA	LENS	81232-LENS
	165643-01-701	EA	BULB HALOGEN 20 WATT	88002

COPYRIGHT © 2010 WINNEBAGO INDUSTRIES INC.

170693-02-02A

KEY	PART NUMBER	U/M	DESCRIPTION	VENDOR NO
	170693-02-700	EA	LENS-OPTIC	L8106

COPYRIGHT © 2010 WINNEBAGO INDUSTRIES INC.

DWG NO 169848

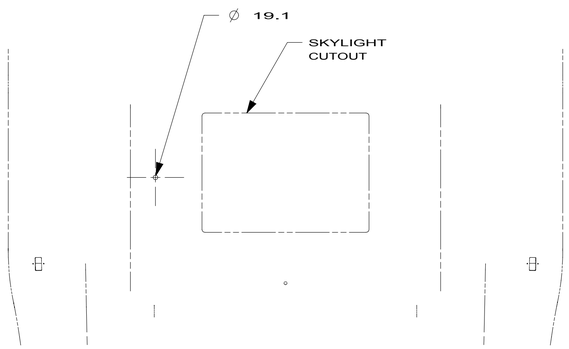

DETAIL CA (70C)

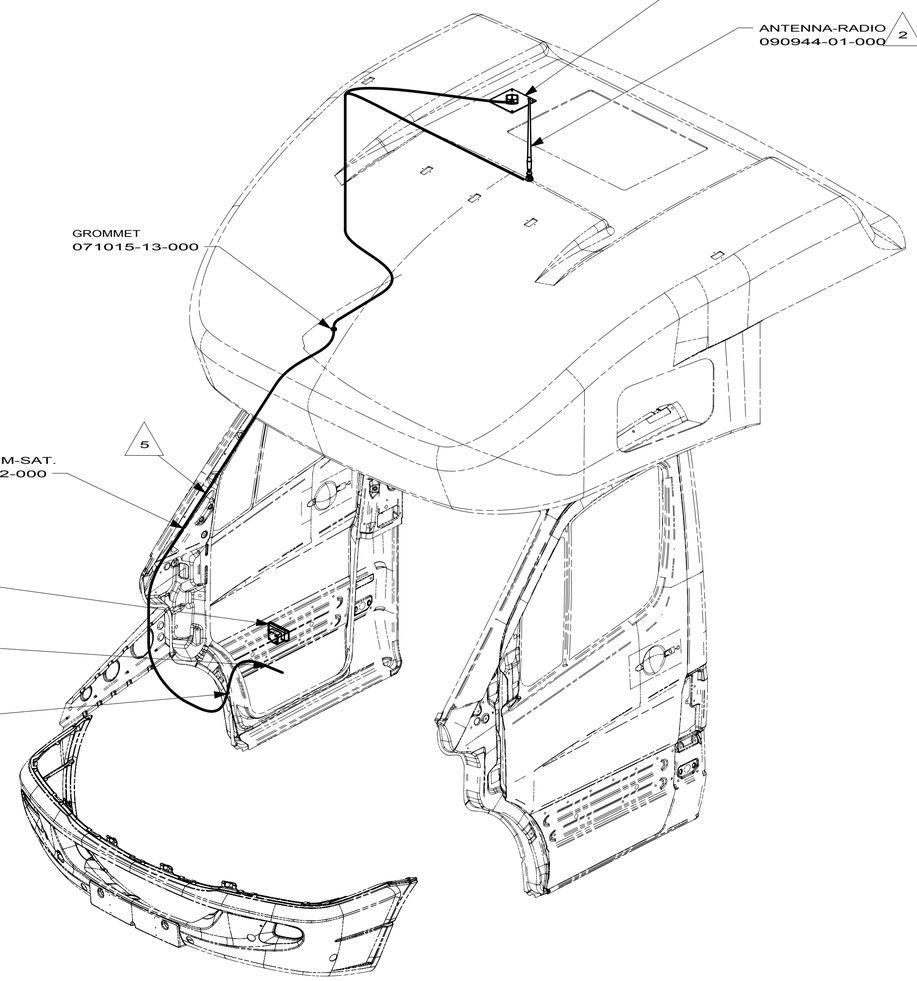

500-Series
169848-03

10 SEE RADIO INSTL FOR ADDITIONAL INFORMATION.

9 SUPPLLIED WITH SATELLITE RADIO RECEIVER.

8 CONNECT UNILINK CABLE SUPPLIED WITH SATELLITE RECEIVER BETWEEN DASH RADIO AND SATELLITE RECEIVER DOCKING KIT. ROUTE UNILINK CABLE ALONG WITH RADIO I-POD CABLE TO TRAY ABOVE DASH RADIO.

7 CUT AND REMOVE A 75MM X 75MM AREA OF THE ALUMINUM INSULATION, CENTERED ABOUT THE RADIO ANTENNA ROOF CAP.

6 MOUNT SAT. RECEIVER DOCKING KIT PEDESTAL MOUNT TO TRAY ABOVE DASH RADIO TOWARDS PASSENGER SIDE.

5 ROUTE SATELLITE RADIO ANTENNA CABLE FROM THE DASH UP A-PILLAR TO ROOF CAP.

4 SEE WIRING INSTL-CHASSIS FOR ADDITIONAL INFORMATION.

3 MOUNT ANTENNA SUCH THAT BASE IS SQUARE W/REAR OF ROOF CAP & CENTER HOLE OF ANTENNA DIRECTLY OVER HOLE IN FIBERGLASS. SEAL HOLE, BASE, AND SCREWS.

2 SEAL AROUND ANTENNA BASE.

1 ROUTE RADIO ANTENNA CABLE FROM DASH RADIO UNDER DASH UP PASSENGER SIDE A-PILLAR TO ROOF CAP.

NOTES:

70C RADIO - SATELLITE

265 CODES/STANDARDS-CSA/CMVSS

1B1 CODES/STANDARDS USA

1B1 265

FOR ELECTRICAL TORQUE SPECIFICATIONS SEE DWG NO. 128783-01-000

X-X FOR ELECTRICAL CALLOUTS SEE DWG NO. 121339-01-000

FIRST USED
10 MOTORHOMES

DO NOT SCALE DRAWING

TITLE:
ANTENNA INSTL-RADIO AND CB

SHEET 3 | PART NO 169848 | REV

11/26/2009

RELEASE	REV A	DATE	DWG NO 173475

REV	ZONE	REVISION RECORD	DATE	DFTR-ORIG

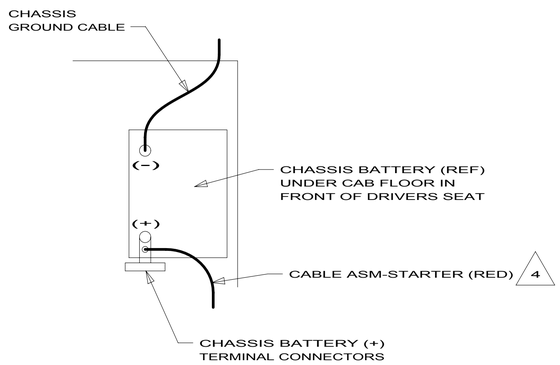

DETAIL AA

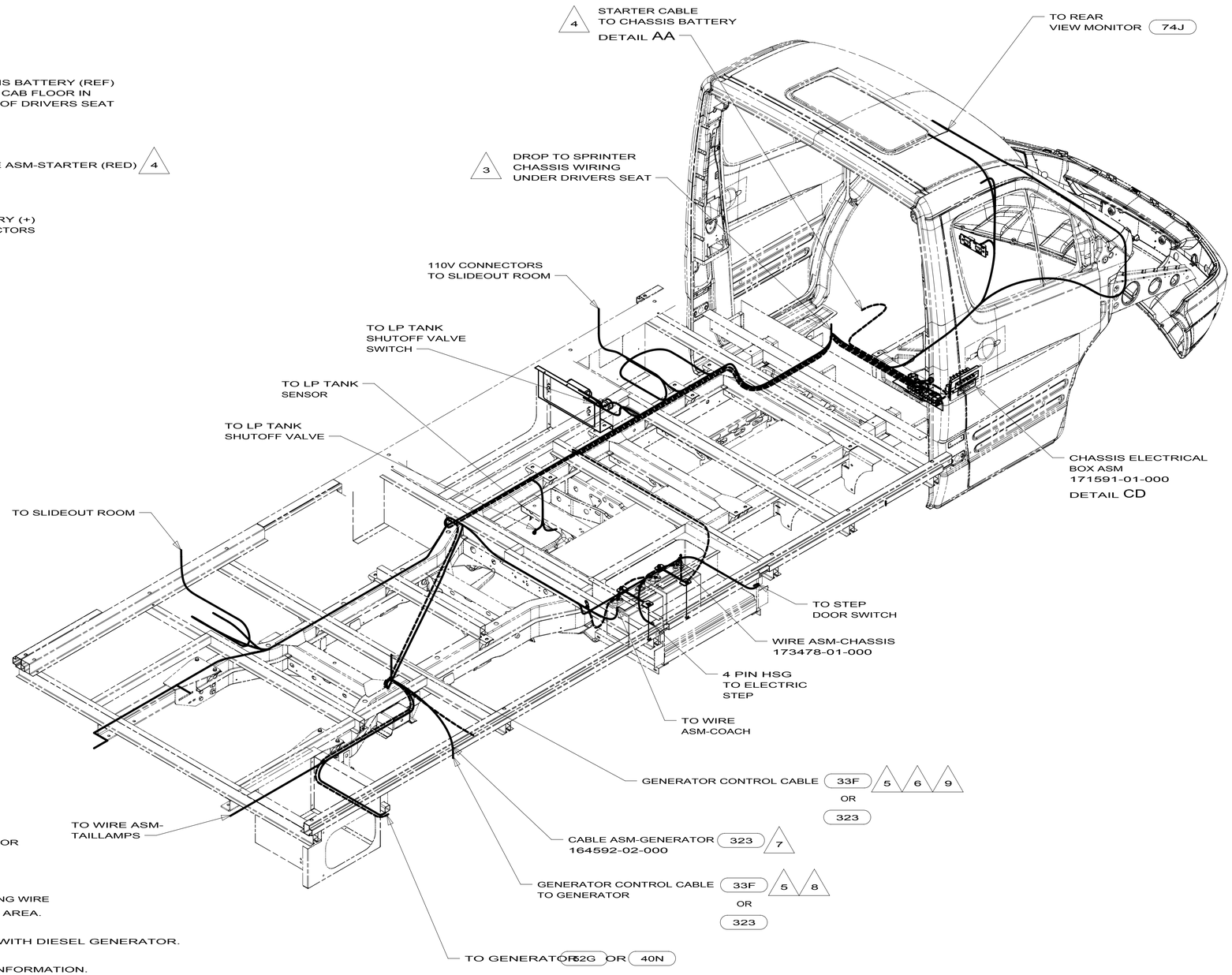

323	GENERATOR PREP KIT - DIESEL
33F	GEN-3.5 KW ONAN DIESEL
74J	REARVIEW MONITOR SYS W/AUDIO
52G	GEN-3.6KW ONAN LP MICROQUIET
40N	GEN-4.0KW-ONANGAS-MICROQUIET
1KC	DODGE-11,200# GVWR, GAS
1KB	DODGE-11,200# GVWR, DIESEL
265	CODES/STANDARDS-CSA/CMVSS
1B1	CODES/STANDARDS USA

9 12 PIN HOUSING TO BE ROUTED ABOVE FLOOR TO CONTROL PANEL

8 10 PIN HOUSING CONNECTS TO GENERATOR

7 NOT USED WITH 33F

6 ROUTE GENERATOR CONTROL CABLE ALONG WIRE ASM-CHASSIS THROUGH FLOOR IN THIS AREA.

5 WITH FEATURE 33F CABLE SUPPLIED WITH DIESEL GENERATOR.

4 SEE BATTERY INSTL FOR ADDITIONAL INFORMATION.

3 CUT WIRE TIE AROUND SPRINTER SEAL, ROUTE THE CHASSIS WIRING THROUGH HOLE AND WIRE TIE SEAL WITH WIRE TIE 8343-04-000.

2. SECURE CONDUIT 41953, TAB AS REQUIRED, OVER ALL WIRES IN CONTACT WITH SHARP EDGES.

1. LEGEND: WINNEBAGO CABLE: CHASSIS SUPPLIED WIRING.

NOTES:

FOR ELECTRICAL TORQUE SPECIFICATIONS SEE DWG NO. 128783-01-000

X-X FOR ELECTRICAL CALLOUTS SEE DWG NO. 121339-01-000

1B1 265 1KB 1KC

WINNEBAGO INDUSTRIES

COPYRIGHT 2010
WINNEBAGO
INDUSTRIES, INC.

DFTR	ORIG. DATE
CHKR	ALL DIMENSIONS ARE IN MILLIMETERS
P.E.	
M.E.	FIRST USED
DSNR	10 524A

UNSPECIFIED TOLERANCES ARE:

WHOLE DIM (X)	±	3
ONE-PLACE (X.X)	±	1.5
TWO-PLACE (X.XX)	±	0.50
ANGLE	±	1°

MATERIAL:

THIRD ANGLE PROJECTION

DO NOT SCALE DRAWING

TITLE: WIRING INSTL-CHASSIS

SHEET 1 OF 4 | PART NO 173475 | REV

REF: 1

4/8/2010

DWG NO 173475

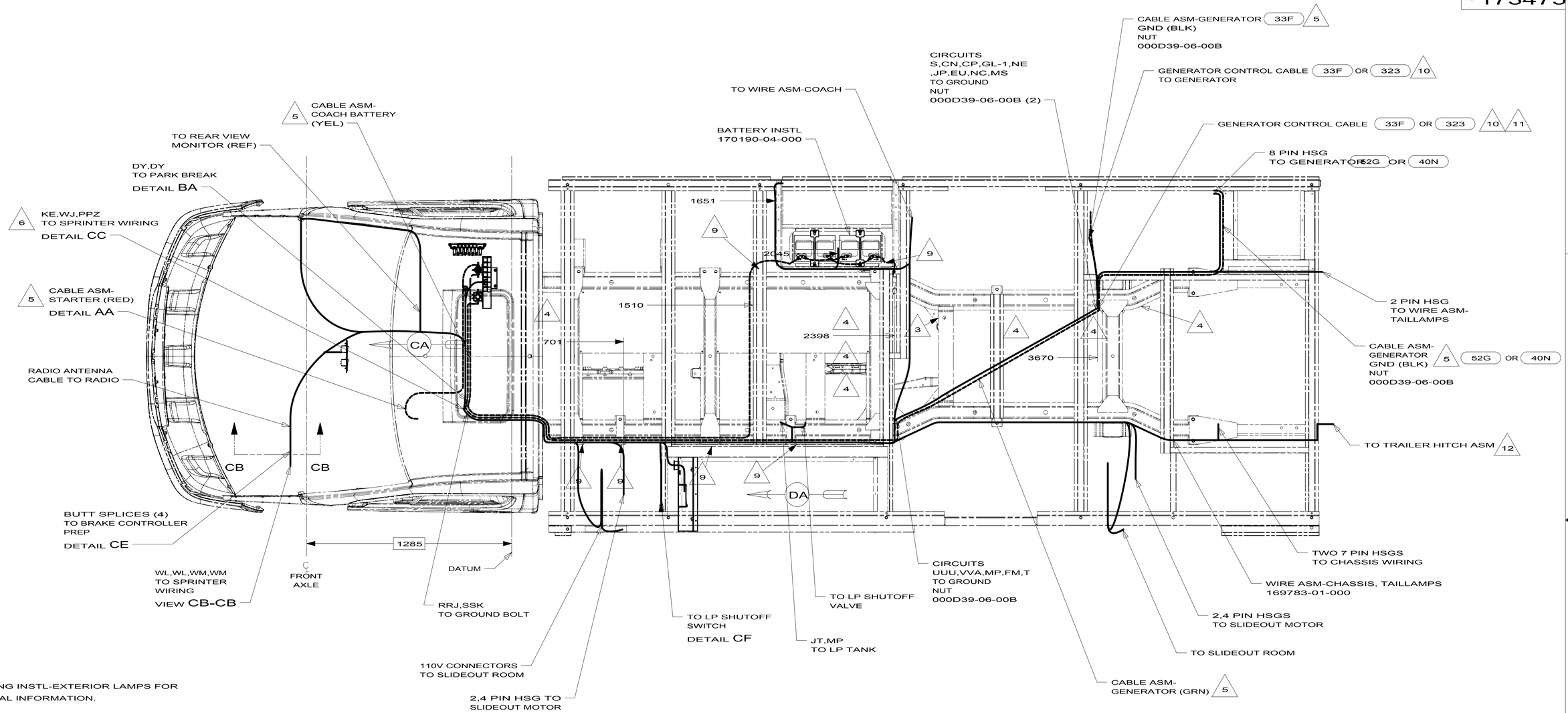

12 SEE WIRING INSTL-EXTERIOR LAMPS FOR ADDITIONAL INFORMATION.

11 ROUTE GENERATOR CONTROL CABLE ALONG WIRE ASM-CHASSIS THROUGH FLOOR IN THIS AREA.

10 WITH FEATURE 33F CABLE SUPPLIED WITH DIESEL GENERATOR.

9 TIE-WIRE MOUNT 116673-01-000. USE HOLES IN BODY MOUNTS.

8 CUT BROWN/BLACK WIRE FROM PARK BRAKE SWITCH AND RECONNECT TO CIRCUIT DY OF WIRE ASM-CHASSIS AS SHOWN.

7 SEE WIRING INSTL-BODY,12V FOR ADDITIONAL INFORMATION.

6 ROUTE WIRES THROUGH CAB FLOOR UNDER DRIVERS SEAT PEDESTAL.

5 SEE BATTERY INSTL FOR ADDITIONAL INFORMATION.

4 CLAMP 83610-02-000, SCREW G39-08-12B. DO NOT DRILL OR SCREW INTO SPRINTER FRAME. USE ALUMINUM RISERS.

3 TIE WIRE MOUNT WIRE TIE TO CHASSIS CROSS MEMBER.

2. SECURE CONDUIT 41953, TAB AS REQUIRED, OVER ALL WIRES IN CONTACT WITH SHARP EDGES.

1. LEGEND: WINNEBAGO: CABLE: CHASSIS SUPPLIED WIRING.

NOTES:

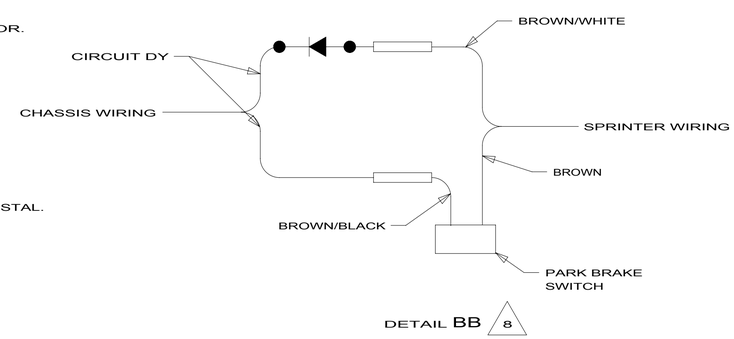

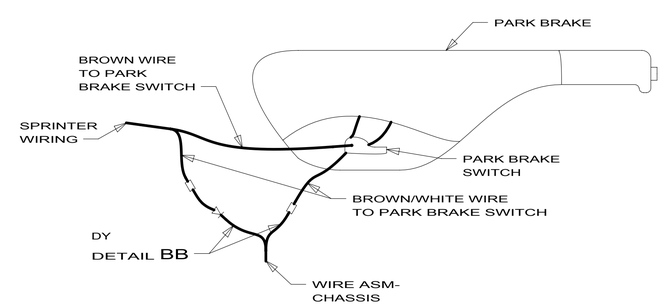

323	GENERATOR PREP KIT - DIESEL
33F	GEN-3.5 KW ONAN DIESEL
52G	GEN-3.6KW ONAN LP MICROQUIET
40N	GEN-4.0KW-ONANGAS-MICROQUIET
1KC	DODGE-11,200# GVWR, GAS
1KB	DODGE-11,200# GVWR, DIESEL
265	CODES/STANDARDS-CSA/CMVSS
1B1	CODES/STANDARDS USA

1B1 265 1KB 1KC

FOR ELECTRICAL TORQUE SPECIFICATIONS SEE DWG NO. 128783-01-000

X-X FOR ELECTRICAL CALLOUTS SEE DWG NO. 121339-01-000

FIRST USED 10 524A

DO NOT SCALE DRAWING

TITLE: WIRING INSTL-CHASSIS

SHEET 2 PART NO 173475 REV

4/8/2010

DWG NO 173475

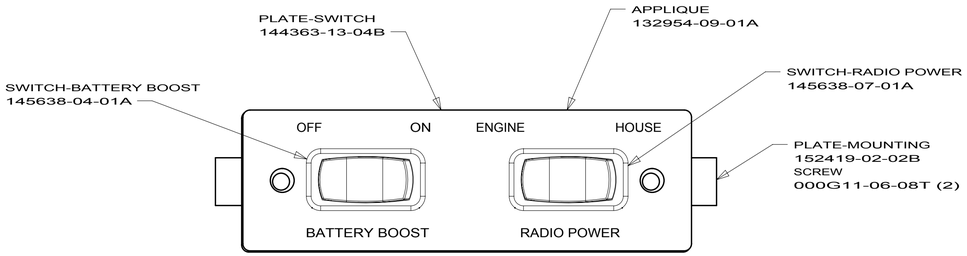

DETAIL CA

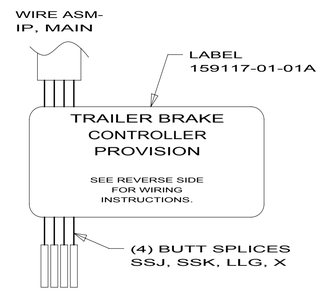

DETAIL CE

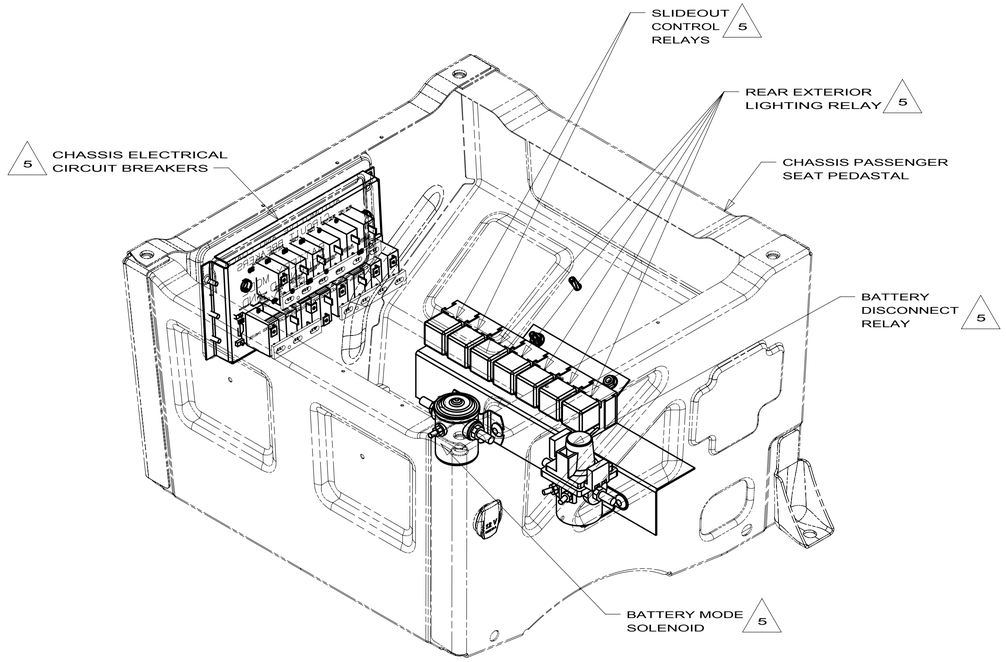

DETAIL CD

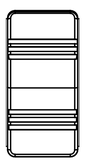

SWITCH-LP SHUTOFF
108357-01-000
ACTUATOR
108356-02-01A
LABEL
130170-04-000

DETAIL CF

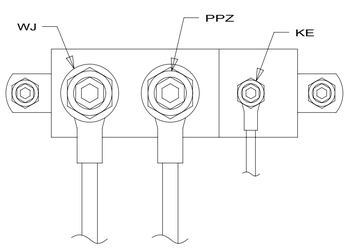

DETAIL CC 3

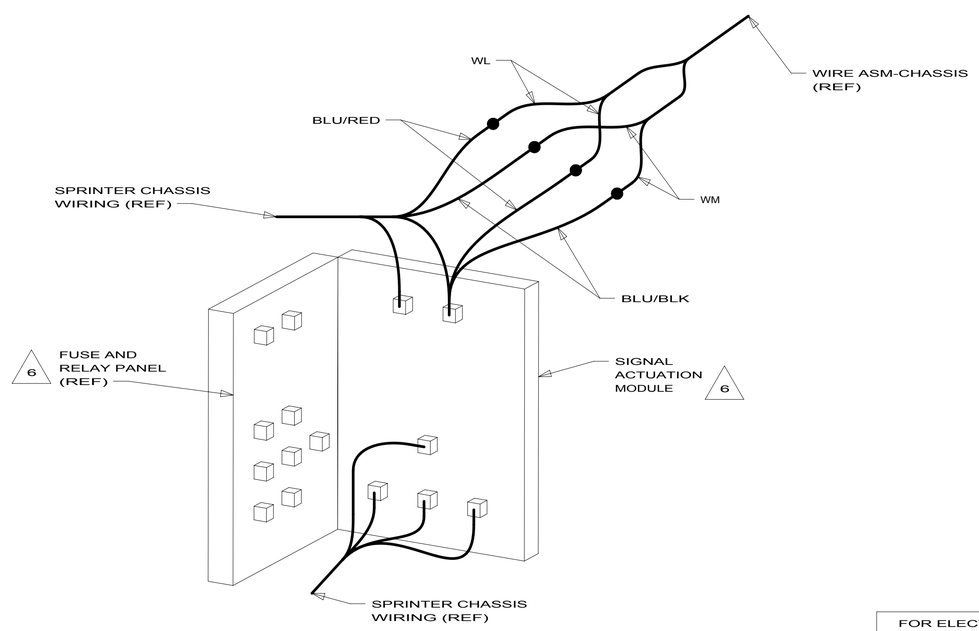

SECTION CB-CB

NOTES:

6 LOCATED IN DRIVERS SIDE KICKER PANEL.

5 SEE CHASSIS ELECTRICAL BOX ASM FOR ADDITIONAL INFORMATION.

4 REMOVE 30MM PLUG IN FIREWALL UNDER DASH. ROUTE WIRE ASM-CHASSIS FROM ENGINE COMPARTMENT THROUGH FIREWALL INTO CAB.

3 CONNECTION POINT IS LOCATED UNDER DRIVERS SEAT.

2. SECURE CONDUIT 41953, TAB AS REQUIRED, OVER ALL WIRES IN CONTACT WITH SHARP EDGES.

1. LEGEND: ——— WINNEBAGO ---------- CABLE: ——— CHASSIS SUPPLIED WIRING.

FOR ELECTRICAL TORQUE SPECIFICATIONS SEE DWG NO. 128783-01-000

X-X FOR ELECTRICAL CALLOUTS SEE DWG NO. 121339-01-000

1KC DODGE-11,200# GVWR, GAS
1KB DODGE-11,200# GVWR, DIESEL
265 CODES/STANDARDS-CSA/CMVSS
1B1 CODES/STANDARDS USA

1B1 265 1KB 1KC

FIRST USED 10 524A

DO NOT SCALE DRAWING

TITLE: WIRING INSTL-CHASSIS

SHEET 3 PART NO 173475 REV

4/8/2010

DWG NO 173475

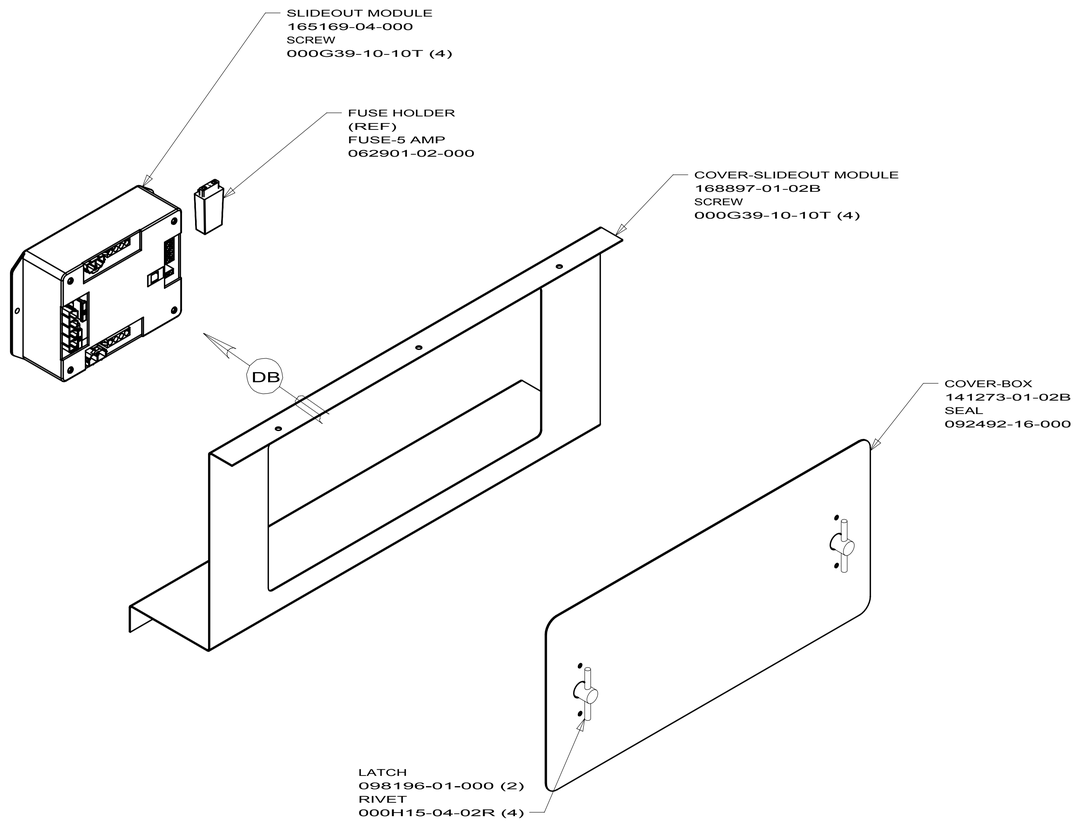

VIEW DA

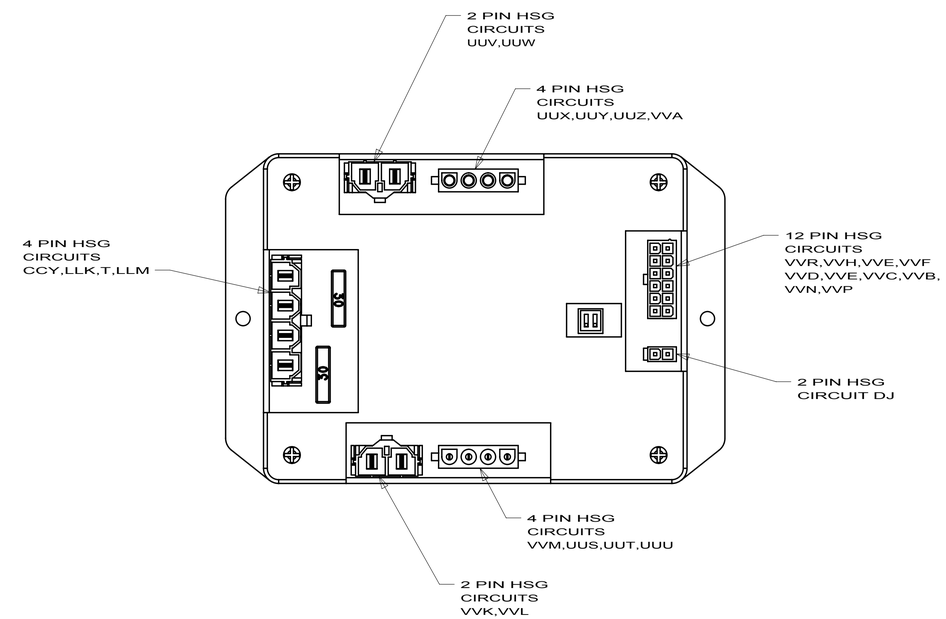

VIEW DB

1KC DODGE-11,200# GVWR, GAS

1KB DODGE-11,200# GVWR, DIESEL

265 CODES/STANDARDS-CSA/CMVSS

1B1 CODES/STANDARDS USA

1B1 265 1KB 1KC

FIRST USED

10 524A

DO NOT SCALE DRAWING

TITLE:

WIRING INSTL-CHASSIS

SHEET 4 | PART NO 173475 | REV

FOR ELECTRICAL TORQUE SPECIFICATIONS SEE DWG NO. 128783-01-000

X-X FOR ELECTRICAL CALLOUTS SEE DWG NO. 121339-01-000

4/8/2010

DRAWING NO.	MODEL	SHEET
170190-01	524K,524J	1,2
170190-02	524CL,524DL	1,3
170190-03	524P	1,2
170190-04	524A	1,2

RELEASE	REV A	DATE	DWG NO 170190

REV	ZONE	REVISION RECORD	DATE	DFTR-ORIG

	524P	524K	524J	524CL	524DL	524A	
CABLE ASM-STARTER (RED)	141415-37-013	141415-37-013	141415-37-013	141415-37-013	141415-37-013	141415-37-013	3
CABLE ASM-COACH BATTERY (YEL)	141415-52-060	141415-52-040	141415-52-053	141415-52-048	141415-52-048	141415-52-053	
CABLE ASM-COACH BATTERY GND (BLK)	133567-12-006	133567-12-006	133567-12-006	133567-12-007	133567-12-007	133567-12-006	
CABLE ASM-GENERATOR (GRN) 321	141415-42-078	141415-42-073	141415-42-078	141415-42-081	141415-42-081	141415-42-078	3
CABLE ASM-GENERATOR GND (BLK) 321	133566-12-021	133566-12-021	133566-12-021	133566-12-021	133566-12-021	133566-12-015	3
CABLE ASM-GENERATOR (GRN) 33F OR 323	141416-42-072	141416-42-067	141416-42-072	141416-42-068	141416-42-068	141416-42-068	3
CABLE ASM-GENERATOR GND (BLK) 33F OR 323	133567-12-011	133567-12-011	133567-12-011	133567-12-011	133567-12-011	133567-12-021	3

33F GEN-3.2 KW ONAN DIESEL

323 GENERATOR PREP KIT - DIESEL

321 GENERATOR PREP KIT

265 CODES/STANDARDS-CSA/CMVSS

1B1 CODES/STANDARDS USA

1B1 265

3 ROUTING OF CABLE SHOWN ON WIRING INSTL-CHASSIS ONLY.

2. BATTERY CABLES ARE NOT TO BE ROUTED OVER BATTERY FILL CAPS.

1. SEE WIRING INSTL-CHASSIS FOR ADDITIONAL INFORMATION FOR ROUTING CABLES.

NOTES:

FOR ELECTRICAL TORQUE SPECIFICATIONS SEE DWG NO. 128783-01-000

X-X FOR ELECTRICAL CALLOUTS SEE DWG NO. 121339-01-000

WINNEBAGO INDUSTRIES

COPYRIGHT 2009 WINNEBAGO INDUSTRIES, INC.

DFTR | ORIG. DATE

CHKR | ALL DIMENSIONS ARE IN MILLIMETERS

P.E.

M.E. | FIRST USED

DSNR | 10 500-SERIES

UNSPECIFIED TOLERANCES ARE:
WHOLE DIM (X) :
ONE-PLACE (X.X) :
TWO-PLACE (X.XX) :
ANGLE :

MATERIAL:

THIRD ANGLE PROJECTION

DO NOT SCALE DRAWING

TITLE: BATTERY INSTL

SHEET 1 OF 3 | PART NO 170190 | REV

REF: 1

DWG NO 170190

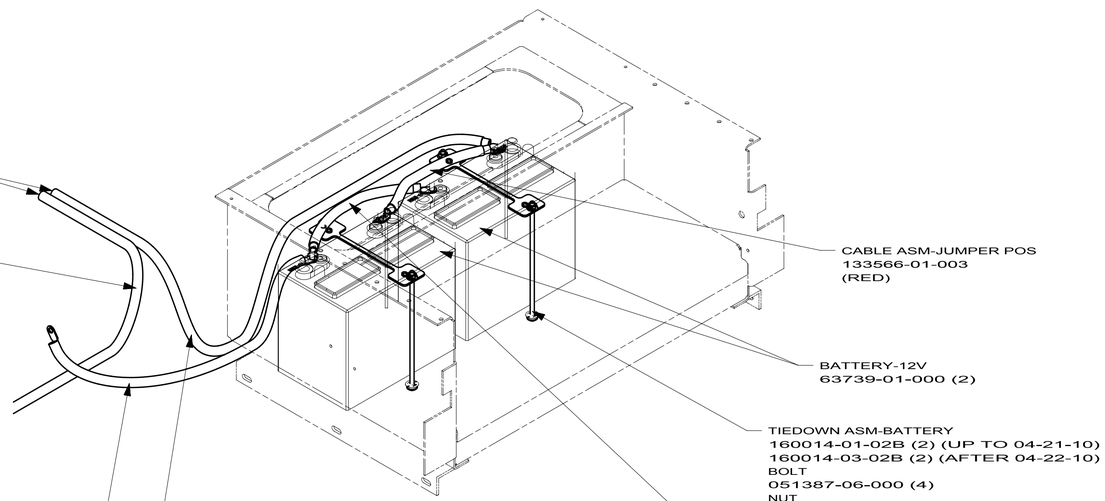

BATTERY BOX

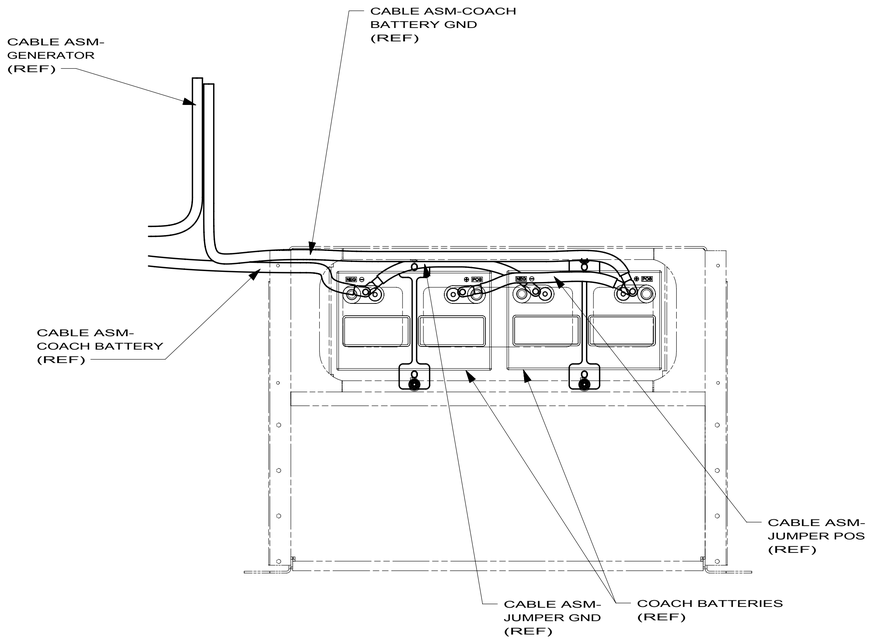

VIEW BA

265 CODES/STANDARDS-CSA/CMVSS

1B1 CODES/STANDARDS USA

NOTES:

2. BATTERY CABLES ARE NOT TO BE ROUTED OVER BATTERY FILL CAPS.

1. CHASSIS FOR ADDITIONAL INFORMATION FOR ROUTING CABLES.

FOR ELECTRICAL TORQUE SPECIFICATIONS SEE DWG NO. 128783-01-000

X-X FOR ELECTRICAL CALLOUTS SEE DWG NO. 121339-01-000

1B1 265

FIRST USED

10 500-SERIES

DO NOT SCALE DRAWING

TITLE: BATTERY INSTL

SHEET 2 | PART NO 170190 | REV

4/24/2010

DWG NO 170190

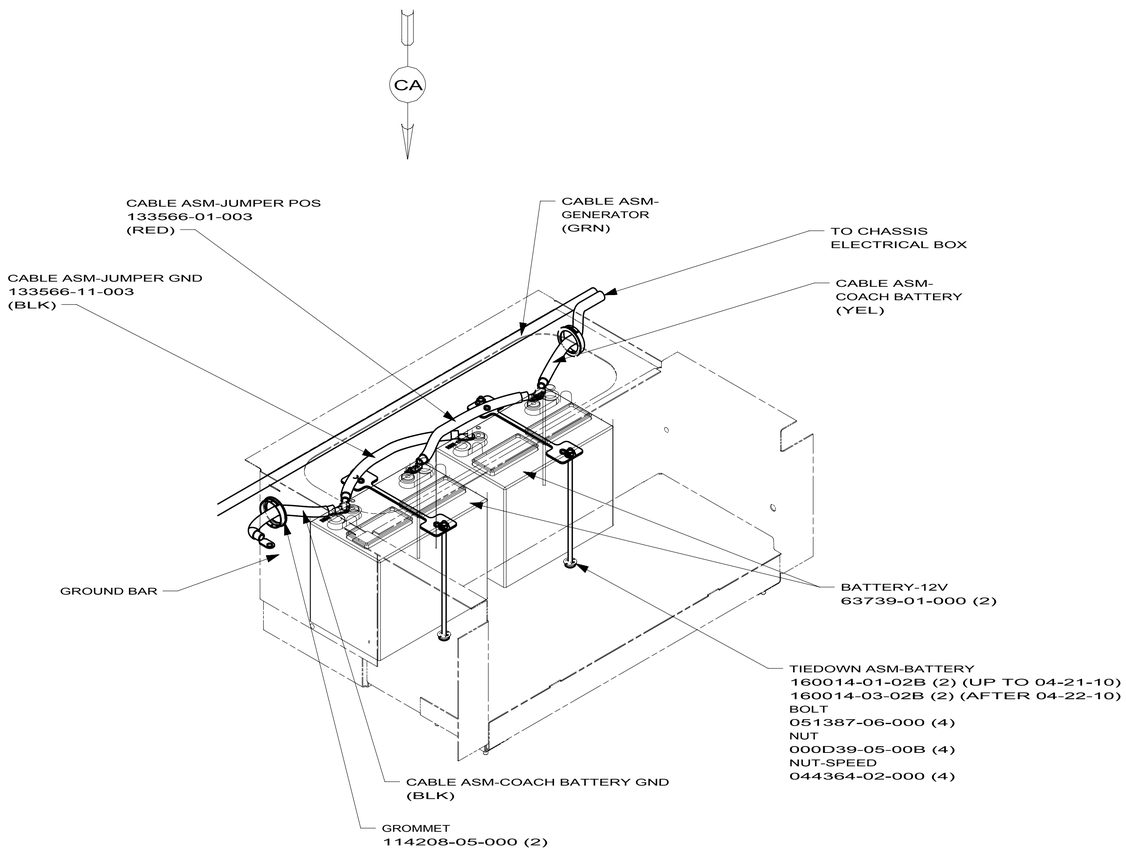

BATTERY BOX

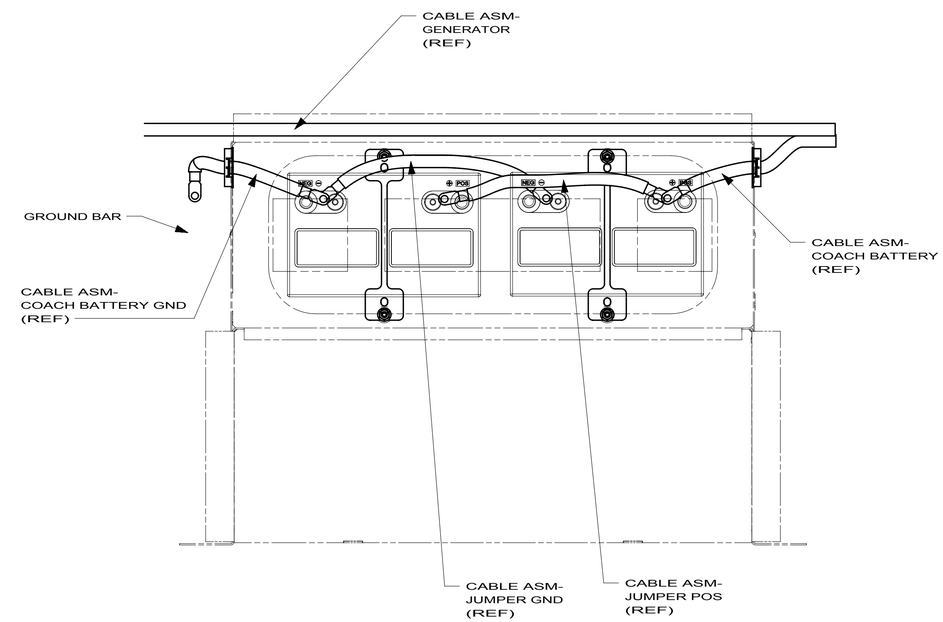

VIEW CA

2. BATTERY CABLES ARE NOT TO BE ROUTED OVER BATTERY FILL CAPS.

1. SEE WIRING INSTL-CHASSIS FOR ADDITIONAL INFORMATION FOR ROUTING CABLES.

NOTES:

FOR ELECTRICAL TORQUE SPECIFICATIONS SEE DWG NO. 128783-01-000

X-X FOR ELECTRICAL CALLOUTS SEE DWG NO. 121339-01-000

265 CODES/STANDARDS-CSA/CMVSS

1B1 CODES/STANDARDS USA

1B1 265

FIRST USED

10 500-SERIES

DO NOT SCALE DRAWING

TITLE: BATTERY INSTL

SHEET 3 | PART NO 170190 | REV

4/24/2010

RELEASE	REV A	DATE	DWG NO 171591

REV	ZONE	REVISION RECORD	DATE	DFTR-ORIG

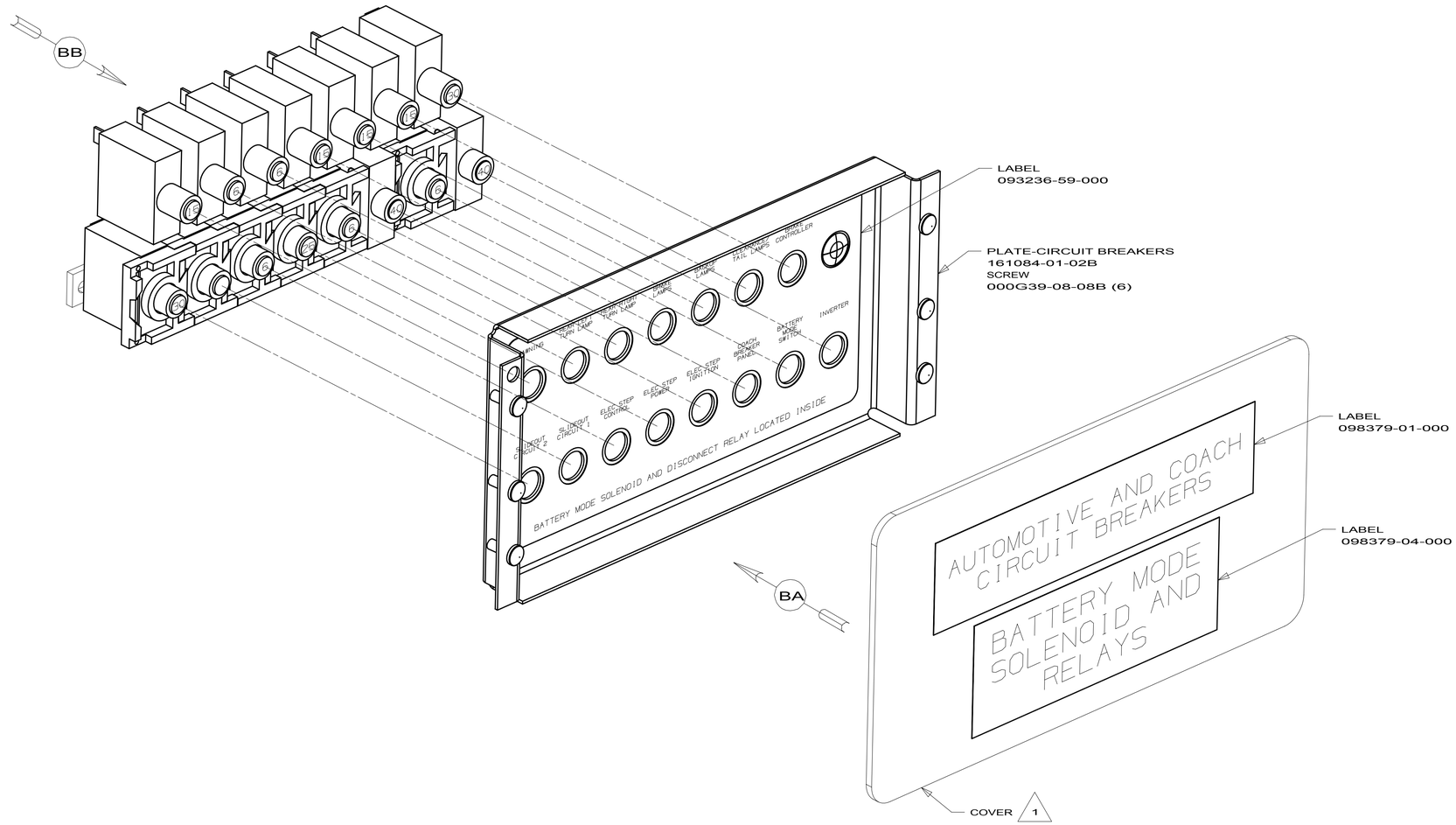

1 SUPPLIED WITH CHASSIS.

NOTES:

FOR ELECTRICAL TORQUE SPECIFICATIONS SEE DWG NO. 128783-01-000

X-X FOR ELECTRICAL CALLOUTS SEE DWG NO. 121339-01-000

COPYRIGHT 2010
WINNEBAGO
INDUSTRIES, INC.

DFTR	ORIG. DATE
CHKR	ALL DIMENSIONS ARE IN MILLIMETERS
P.E.	
M.E.	FIRST USED
DSNR	10 500-SER

UNSPECIFIED TOLERANCES ARE:

WHOLE DIM (X)	±	3
ONE-PLACE (X.X)	±	1.5
TWO-PLACE (X.XX)	±	0.50
ANGLE	±	1°

MATERIAL:

THIRD ANGLE PROJECTION

DO NOT SCALE DRAWING

TITLE:
CHASSIS ELECTRICAL BOX ASM

SHEET 1 OF 2 | PART NO 171591 | REV

REF: 1

4/13/2010

DWG NO 171591

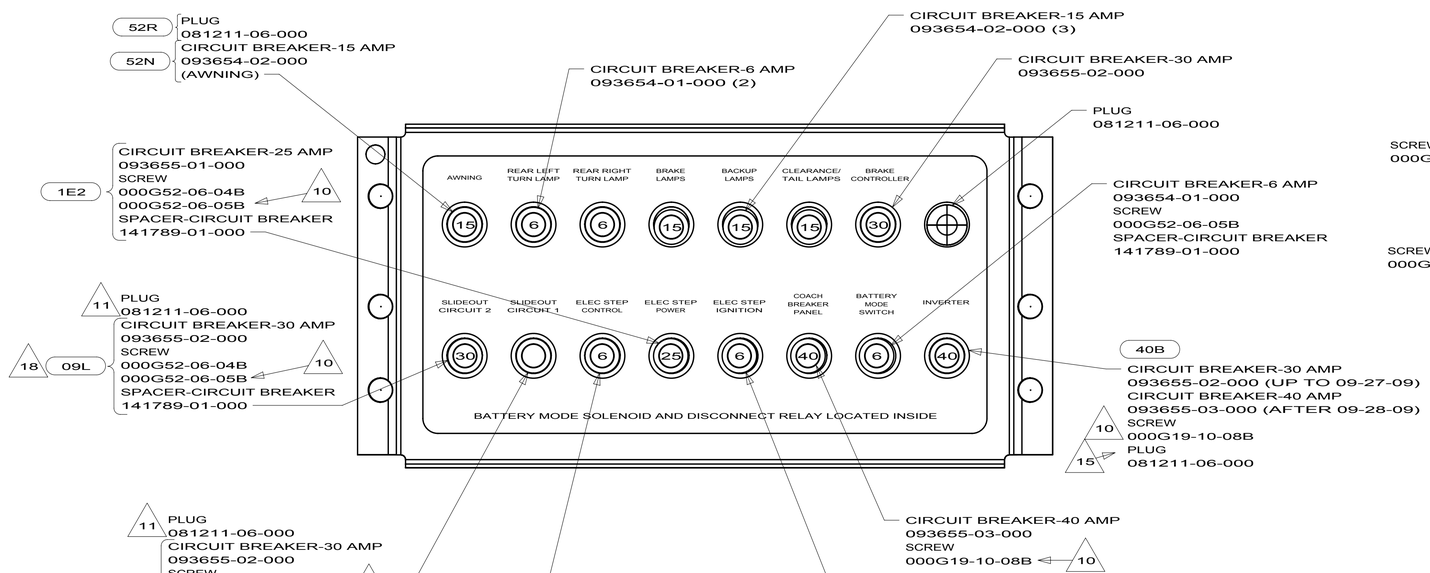

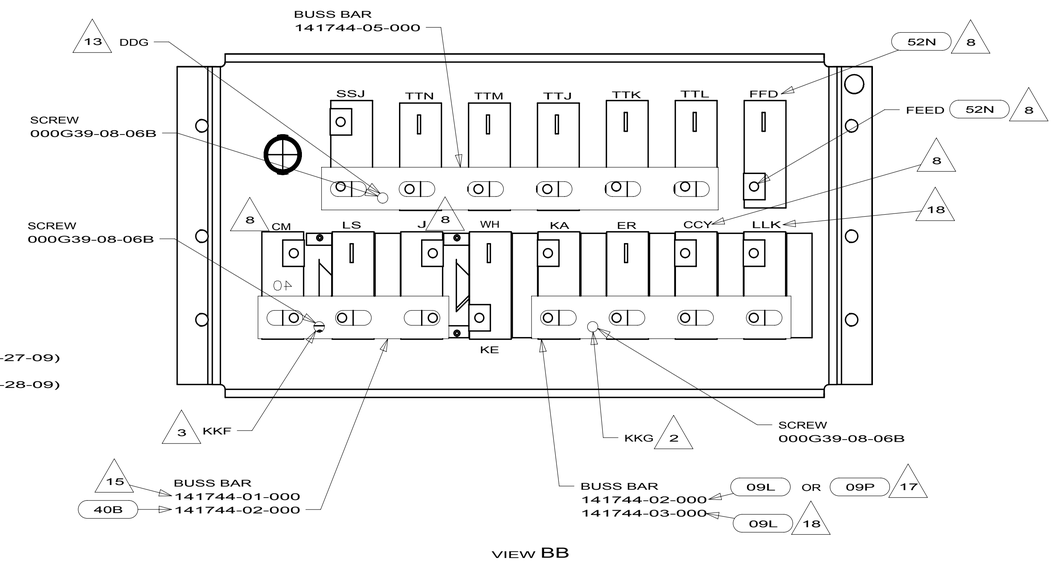

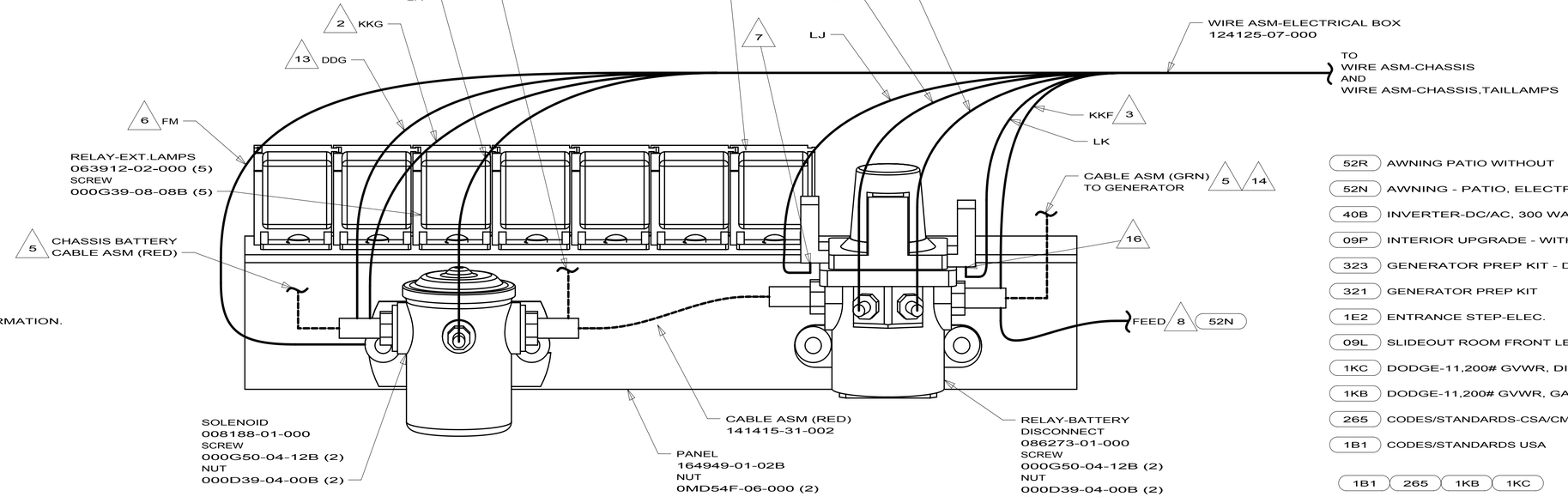

18 USED ON 524A AND 524K ONLY.

17 NOT USED ON 524A AND 524K.

16 INSERT TERMINAL FROM CIRCUIT LK INTO FUSE HOLDER SOCKET ON RELAY.

15 WITHOUT 40B

14 WITH FEATURE 321 OR 323 DO NOT CONNECT CABLE ASM-GENERATOR (GRN) TO SOLONOID. TAPE END WITH TAPE 8363-01-000 AND LEAVE CABLE END LOOSE IN ELECTRICAL BOX.

13 WIRE IS MARKED WITH RED TAPE.

12 WITHOUT 1E2

11 WITHOUT 09L OR 09P

10 REPLACE EXISTING SCREW TO PROPERLY ATTACH BREAKER TO BUSS BAR.

9 SEE WIRE ASM-CHASSIS TAILLAMPS FOR ADDITIONAL INFORMATION.

8 CIRCUIT IS FROM WIRE ASM-CHASSIS.

7 INSERT TERMINAL FROM CIRCUIT LJ INTO FUSE HOLDER SOCKET ON RELAY.

6 SECURE WITH SOLENOID MOUNTING SCREW.

5 WIRING INSTL-CHASSIS FOR ADDITIONAL INFORMATION.

4 TAPE BACK UNUSED WIRES TO HARNESS.

3 WIRE IS MARKED WITH YELLOW TAPE.

2 WIRE IS MARKED WITH PURPLE TAPE.

1. LEGEND: WINNEBAGO CABLE: CHASSIS SUPPLIED WIRING.

NOTES:

52R AWNING PATIO WITHOUT
52N AWNING - PATIO, ELECTRIC
40B INVERTER-DC/AC, 300 WATT
09P INTERIOR UPGRADE - WITHOUT
323 GENERATOR PREP KIT - DIESEL
321 GENERATOR PREP KIT
1E2 ENTRANCE STEP-ELEC.
09L SLIDEOUT ROOM FRONT LEFT
1KC DODGE-11,200# GVWR, DIESEL
1KB DODGE-11,200# GVWR, GAS
265 CODES/STANDARDS-CSA/CMVSS
1B1 CODES/STANDARDS USA

1B1 265 1KB 1KC

FOR ELECTRICAL TORQUE SPECIFICATIONS SEE DWG NO. 128783-01-000

X-X FOR ELECTRICAL CALLOUTS SEE DWG NO. 121339-01-000

FIRST USED 10 500-SER

DO NOT SCALE DRAWING

TITLE: CHASSIS ELECTRICAL BOX ASM

SHEET 2 PART NO 171591 REV

4/13/2010

RELEASE	REV A	DATE	DWG NO 121339

REV	ZONE	REVISION RECORD	DATE	DFTR-ORIG

TERMINALS

NO.	PART NUMBER	DESCRIPTION
B-1	50003-01	TERMINAL-PIN, 16-14 GA,.156 DIA
B-2	50004-01	TERMINAL-RECP, 16-14 GA,.156 DIA
B-11	50003-02	TERMINAL-PIN, 16-14 GA,.180 DIA
B-12	50004-02	TERMINAL-RECP, 16-14 GA,.180 DIA
WP-1	106950-01	TERMINAL-PIN, 16-14 GA
WP-2	106950-02	TERMINAL-PIN, 10-12 GA
WP-3	106950-03	TERMINAL-PIN, 8 GA
R-1	35416-01	TERMINAL-RING, #10 STD, 8 GA
R-2	35416-02	TERMINAL-RING, #10 STD, 6 GA
R-3	35416-03	TERMINAL-RING, #10 STD, 10-12 GA
R-4	35416-04	TERMINAL-RING, #10 STD, 14-16 GA
R-5	37018-01	TERMINAL-RING, 5/16 STD, 12-10 GA
R-6	102777-01	TERMINAL-RING, #6 STD, 14-16 GA
R-7	102777-02	TERMINAL-RING, #6 STD, 10-12 GA
R-8	102777-03	TERMINAL-RING, #6 STD, 8 GA
R-9	33787-01	TERMINAL-RING, #10 STD, 14 GA
R-60	8325-01	TERMINAL-RING, 1/4 STD, 14-16 GA
R-61	8326-01	TERMINAL-RING, 3/8 STD, 14-16 GA
R-62	8327-01	TERMINAL-RING, #10 STD, 14-16 GA
R-63	8328-01	TERMINAL-RING, #10 STD, 10-12 GA
R-64	8328-02	TERMINAL-RING, 3/8 STD, 10-12 GA
R-65	8329-01	TERMINAL-RING, 3/8 STD, 8 GA
R-66	8331-01	TERMINAL-RING, 3/8 STD, 4 GA
R-67	8332-01	TERMINAL-RING, 1/4 STD, 6 GA
R-68	8332-02	TERMINAL-RING, 1/4 STD, 10 GA
R-69	8350-01	TERMINAL-RING, 3/8 STD, 6 GA
R-70	99275-02	TERMINAL-RING, 7/16 STD, 8 GA
R-71	101397-01	TERMINAL-RING, #10 STD, 14-16 GA
R-91	88791-01	TERMINAL-RING, 3/8, 90°, 1/0 GA
R-92	88791-02	TERMINAL-RING, 3/8, 90°, 2 GA
R-93	8348-01	TERMINAL-RING, 3/8 STD, 2 GA
R-94	99275-01	TERMINAL-RING, 7/16 STD, 1/0 GA
RF-51	7944-01	TERMINAL-SPADE, 12-10 GA, #8 STUD
RF-52	7945-01	TERMINAL-SPADE, 18-14 GA, #8 STUD
TR-1	47443-01	TERMINAL-RECP, 16-14 GA,.25, INS
TR-2	47443-02	TERMINAL-RECP, 12-10 GA,.25, INS
TR-3	47443-05	TERMINAL-RECP, 22-18 GA,.25, INS
TR-11	47443-03	TERMINAL-RECP, 16-14 GA,.19, INS
TR-12	47443-04	TERMINAL-RECP, 16-14 GA,.11, INS
TR-21	80015-01	TERMINAL-RECP, 22-18 GA,.250, 90 DEG FOR USE WITH TAB THICKNESS .032
TR-22	80015-02	TERMINAL-RECP, 16-14 GA,.187, 90 DEG FOR USE WITH TAB THICKNESS .032
TR-23	80015-03	TERMINAL-RECP, 16-14 GA,.250, 90 DEG FOR USE WITH TAB THICKNESS .032
TR-24	80015-04	TERMINAL-RECP, 16-14 GA,.187, 90 DEG FOR USE WITH TAB THICKNESS .020
TR-51	7940-01	TERMINAL-RECP, 16-12 GA,.25, UNINS
TR-52	23809-01	TERMINAL-RECP, 16-14 GA,.19, UNINS
TR-53	23809-02	TERMINAL-RECP, 18-20 GA,.25, UNINS
TR-54	49270-01	TERMINAL-RECP, 18-20 GA,.19, UNINS
TR-55	7940-02	TERMINAL-RECP, 10 GA, .25, UNINS
TT-1	85745-02	TERMINAL-TAB, 16-14 GA,.25, INS
TT-2	85745-03	TERMINAL-TAB, 10-12 GA,.25, INS
TT-11	85745-04	TERMINAL-TAB, 18-22 GA,.19, INS
TT-51	7942-01	TERMINAL-TAB, 16-14 GA,.25, UNINS
TT-52	7943-01	TERMINAL-TAB, 14-10 GA,.25, UNINS
MF6-1	129236-01	TERMINAL-FEM, M/P, 630, 10-12
MF6-2	129236-02	TERMINAL-FEM, M/P, 630, 14-16

SPLICES

NO.	PART NUMBER	DESCRIPTION
BS-1	31876-01	SPLICE-BUTT, 16-14 GA, BLUE
BS-2	31876-02	SPLICE-BUTT, 12-10 GA, YELLOW
BS-3	31876-03	SPLICE-BUTT, 22-18 GA, RED
BS-SB	100070-01	SPLICE-BUTT, 14-16 GA, SHRINK,BLUE
BS-RB	112823-01	SPLICE-BUTT, 14-22 GA, REDUCER
BS-RS	173854-01	SPLICE-BUTT, 14-22 GA, REDUCER, SHRINK
S-1	7946-01	SPLICE, 1-6 MM²
S-2	23808-01	SPLICE, 6-9 MM²
I-2	7956-02	SHRINK WRAP .375 DIA
I-5	7956-05	SHRINK WRAP .25 DIA
SH-1	58028-01	SPLICE-HAT
S-10	101173-01	SPLICE-BARREL, 26300 CMA

NO.	PART NUMBER	DESCRIPTION
SP-1	90986-02	PLUG ASM-ELECTRIC STEP
SP-2	142524-01-000	HOUSING-4 PIN
	098261-01-000	SOCKET-CONNECTOR
	098262-07-000	SEAL-CONNECTOR
	098261-02-000 (3)	SOCKET-CONNECTOR
	098262-01-000 (3)	SEAL-CONNECTOR
HR-1	63910-01	HOUSING-RELAY
MP-8	125323-02	HOUSING-PIN, 8 CAVITY
MP-10	125323-01	HOUSING-PIN, 10 CAVITY
MPP	125324-01	TERMINAL-MALE, M/P, 150
CAV-1	125325-01	SEAL-CAVITY, 150-SERIES M/P
CON-3	98262-03	SEAL-CONNECTOR
LS-8	125323-03	LOCK-SECONDARY 8 POSITION
LS-10	125323-04	LOCK-SECONDARY 10 POSITION
H-8	108355-01	HOUSING-SWITCH, 8 POSITION
H-12	108355-02	HOUSING-SWITCH, 12 POSITION

NO.	PART NUMBER	DESCRIPTION
GEN-1	125323-02-000	HOUSING-8 POSN, MALE ,150 SERIES
	125324-01-000 (4)	TERMINAL-MALE, M/P, 150
	098262-03-000 (4)	SEAL-CONNECTOR
	125325-01-000 (4)	SEAL-CAVITY, 150 SERIES M/P
	125323-03-000	LOCK-SECONDARY 8 POSITION
GEN-2	125323-01-000	HOUSING-10 POSN, MALE ,150 SERIES
	125324-01-000 (5)	TERMINAL-MALE, M/P, 150
	098262-03-000 (5)	SEAL-CONNECTOR
	125325-01-000 (5)	SEAL-CAVITY, 150 SERIES M/P
	125323-04-000	LOCK-SECONDARY 10 POSITION

HOUSINGS AND TERMINALS

NO.	PART NUMBER	DESCRIPTION
HS-2	88474-10	HOUSING-SOCKET, 2 CAVITY
HS-3	88474-09	HOUSING-SOCKET, 3 CAVITY
HS-4	88474-08	HOUSING-S0CKET, 4 CAVITY
HS-5	88474-07	HOUSING-SOCKET, 5 CAVITY
HS-6	88474-06	HOUSING-SOCKET, 6 CAVITY
HS-7	88474-05	HOUSING-SOCKET, 6 CAVITY-IN LINE
HS-9	88474-03	HOUSING-SOCKET, 9 CAVITY
HS-12	88474-01	HOUSING-SOCKET, 12 CAVITY
HS-15	88474-02	HOUSING-SOCKET, 15 CAVITY
HS-2-R	88474-12	HOUSING-SOCKET, 2 CAVITY-RED
HP-2	88473-10	HOUSING-PIN, 2 CAVITY
HP-3	88473-09	HOUSING-PIN, 3 CAVITY
HP-4	88473-08	HOUSING-PIN, 4 CAVITY
HP-5	88473-07	HOUSING-PIN, 5 CAVITY
HP-6	88473-06	HOUSING-PIN, 6 CAVITY
HP-7	88473-05	HOUSING-PIN, 6 CAVITY-IN LINE
HP-8	88473-04	HOUSING-PIN, 8 CAVITY-IN LINE
HP-9	88473-03	HOUSING-PIN, 9 CAVITY
HP-12	88473-01	HOUSING-PIN, 12 CAVITY
HP-15	88473-02	HOUSING-PIN, 15 CAVITY
HP-2-R	88473-15	HOUSING-PIN, 2 CAVITY-RED
HP-3-B	88473-12	HOUSING-PIN, 3 CAVITY-BLUE
HP-3-G	88473-13	HOUSING-PIN, 3 CAVITY-GREEN
HP-3-R	88473-14	HOUSING-PIN, 3 CAVITY-RED
TS-1	88476-01	SOCKET-CONNECTOR, 20-14 GA
TS-2	88476-02	SOCKET-CONNECTOR, 12-10 GA
TP-1	88475-01	PIN-CONNECTOR, 20-14 GA
TP-2	88475-02	PIN-CONNECTOR, 12-10 GA
HS2HA	137208-01	HOUSING-SOCKET, 2 CAVITY-HIGH AMP
HP2HA	137207-01	HOUSING-PIN, 2 CAVITY-HIGH AMP
TS-HA	137210-01	SOCKET-CONNECTOR, 10AWG HIGH AMP
TP-HA	137209-01	PIN-CONNECTOR, 10AWG HIGH AMP
H-HA	104100-01	HOUSING, 1 CAVITY 75 AMP
T-HA	104100-03	TERMINAL 10 AWG - 6 AWG 75 AMP

BALLOON CALLOUT LEGEND

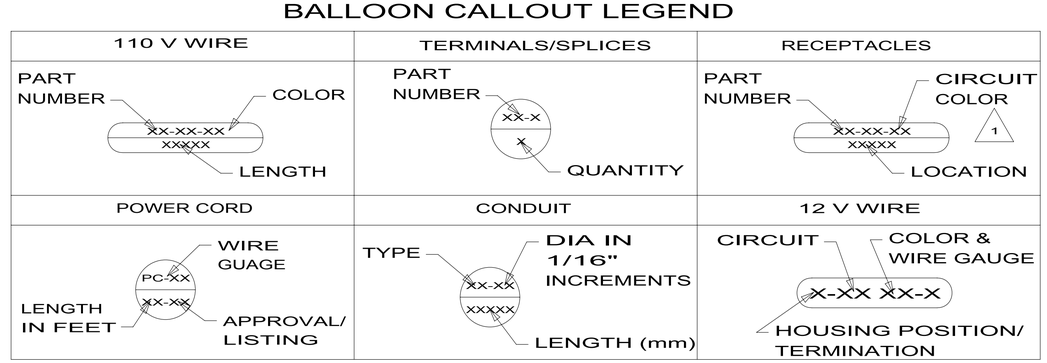

1 FOR RECP-BLANK, DET-X DENOTES DETAIL VIEW.

2 CONTACT WIRE PREP PRIOR TO USING FOR TOOLING PURPOSES.

NOTES:

COPYRIGHT 2010 WINNEBAGO INDUSTRIES, INC.

WINNEBAGO INDUSTRIES

DFTR	ORIG. DATE
CHKR	ALL DIMENSIONS ARE IN MILLIMETERS
P.E.	
M.E.	FIRST USED
DSNR	96 MH'S

UNSPECIFIED TOLERANCES ARE:
WHOLE DIM (X) :
ONE-PLACE (X.X) :
TWO-PLACE (X.XX) :
ANGLE :

MATERIAL:

THIRD ANGLE PROJECTION

DO NOT SCALE DRAWING

TITLE: PART LISTING-ELECTRICAL

SHEET 1 OF 7 | PART NO 121339 | REV

REF: 1

2/17/2010

DWG NO 121339

WIRE-SINGLE INS CONDUCTOR, STRANDED

NO.	PART NUMBER	DESCRIPTION
18-W 18-Y	156658-01 156658-02	WIRE, 18 GA. WHITE, PVC WIRE, 18 GA. YELLOW, PVC
16-Y 16-W	89360-01 89360-02	WIRE, 16 GA. YELLOW, PVC WIRE, 16 GA. WHITE, PVC
14-Y 14-W	48554-02 48554-04	WIRE, 14 GA. YELLOW, PVC WIRE, 14 GA. WHITE, PVC
12-Y 12-W	48555-02 48555-04	WIRE, 12 GA. YELLOW, PVC WIRE, 12 GA. WHITE, PVC
10-Y 10-W	8000-03 8000-05	WIRE, 10 GA. YELLOW, PVC WIRE, 10 GA. WHITE, PVC
8-B 8-G	8005-01 8005-03	WIRE, 8 GA. BLACK, PVC WIRE, 8 GA. GREEN, PVC
6-B 6-G	70065-01 70065-03	WIRE, 6 GA. BLACK, PVC WIRE, 6 GA. GREEN, PVC
18-WX 18-YX	121015-01 121015-02	WIRE, 18 GA. WHITE, XLPE WIRE, 18 GA. YELLOW, XLPE
16-YX 16-WX	116675-01 116675-02	WIRE, 16 GA. YELLOW, XLPE WIRE, 16 GA. WHITE, XLPE
14-YX 14-WX	98586-01 98586-02	WIRE, 14 GA. YELLOW, XLPE WIRE, 14 GA. WHITE, XLPE
12-YX 12-WX	98609-01 98609-02	WIRE, 12 GA. YELLOW, XLPE WIRE, 12 GA. WHITE, XLPE
10-YX 10-WX	116676-03 116676-04	WIRE, 10 GA. YELLOW, XLPE WIRE, 10 GA. WHITE, XLPE
8-BX 8-GX	116674-01 116674-02	WIRE, 8 GA. BLACK, XLPE WIRE, 8 GA. GREEN, XLPE
6-BX 6-GX	116687-01 116687-02	WIRE, 6 GA. BLACK, XLPE WIRE, 6 GA. GREEN, XLPE

WIRE-NM SHEATHED CABLE

NO.	PART NUMBER	DESCRIPTION
14 UL	8027-01-000	WIRE 14-2 ROMEX W/GROUND (UL)
14 CA	8023-02-000	WIRE 14-2 ROMEX W/GROUND (CAN)
12 UL	8026-01-000	WIRE 12-2 ROMEX W/GROUND (UL)
12 CA	8023-01-000	WIRE 12-2 ROMEX W/GROUND (CAN)
12-3 UL	8026-03-000	WIRE 12-3 ROMEX W/GROUND (UL)
12-3 CA	8023-03-000	WIRE 12-3 ROMEX W/GROUND (CAN)
10 UL	8022-01-000	WIRE 10-2 ROMEX W/GROUND (UL)
10 CA	24743-01-000	WIRE 10-2 ROMEX W/GROUND (CAN)
6-3 UL	108914-01-000	WIRE 6-3 ROMEX W/GROUND (UL)
6-3 CA	113136-01-000	WIRE 6-3 ROMEX W/GROUND (CAN)
6-2 UL	108914-02-000	WIRE 6-2 ROMEX W/GROUND (UL)
4-3 UL	128375-01-000	WIRE 4-3 ROMEX W/GROUND (UL)
4-3 CA	128375-01-000	WIRE 4-3 ROMEX W/GROUND (CAN)

CONDUIT

NO.	PART NUMBER	DESCRIPTION	TEMP.
C-4	41953-07-000	CONDUIT-CONVOLUTE,SLIT .25"ID	194° F
C-6	41953-06-000	CONDUIT-CONVOLUTE,SLIT .38"ID	194° F
C-8	41953-01-000	CONDUIT-CONVOLUTE,SLIT .50"ID	194° F
C-10	41953-02-000	CONDUIT-CONVOLUTE,SLIT .63"ID	194° F
C-16	41953-03-000	CONDUIT-CONVOLUTE,SLIT 1.0"ID	194° F
C-24	41953-08-000	CONDUIT-CONVOLUTE,SLIT 1.5"ID	194° F
C-32	41953-15-000	CONDUIT-CONVOLUTE,SLIT 2.0"ID	194° F
CX-8	41953-09-000	CONDUIT-CONVOLUTE,SLIT .50"ID	239° F
CX-12	41953-10-000	CONDUIT-CONVOLUTE,SLIT .75"ID	239° F
CX-16	41953-11-000	CONDUIT-CONVOLUTE,SLIT 1.0"ID	239° F
CX-20	41953-13-000	CONDUIT-CONVOLUTE,SLIT 1.25"ID	239° F
CX-24	41953-14-000	CONDUIT-CONVOLUTE,SLIT 1.50"ID	239° F
CX-32	41953-16-000	CONDUIT-CONVOLUTE,SLIT 2.0"ID	239° F
CN-10	41953-05-000	CONDUIT-CONVOLUTE,NOT SLIT .63"ID	194° F
CN-16	41953-12-000	CONDUIT-CONVOLUTE,NOT SLIT 1.0"ID	194° F

POWER CORDS

NO.	PART NUMBER	DESCRIPTION
PC-10/28	8054-01-000	POWER CORD 10 GA, 30 AMP, 28 FT. (UL/CA)
PC-10/35	8054-02-000	POWER CORD 10 GA, 30 AMP, 35 FT. (UL/CA)
PC-10/30-CA	8052-01-000	SUPERCEEDED BY 8054-01-000
PC-6/36	108934-01-000	POWER CORD 6 GA, 50 AMP, 36 FT. (UL/CA)
PC-6/36-FX	108934-02-000	POWER CORD 6 GA, 50 AMP, 36 FT. (UL/CSA) SUPERFLEX
PC-6/36-CA	113096-01-000	SUPERCEEDED BY 108934-02-000

BATTERY CABLE LEGEND

COLOR	DESCRIPTION
PURPLE	CHASSIS BATTERY TO SOLENOID
BLUE	HYDRAULIC JACKS PUMP
RED	BATTERY TO STARTER
GREEN	BATTERY TO GENERATOR
YELLOW	COACH BATTERY TO SOLENOID

RECEPTACLES(UP TO 01-24-10)

NO.	PART NUMBER	DESCRIPTION
RCP-1	172839-02-CHT	RECEPTACLE-SINGLE, FLUSH MOUNT
RCP-2	172839-01-CHT	RECEPTACLE-DOUBLE, FLUSH MOUNT
RCP-3	58707-01-000	RECEPTACLE-SINGLE, SURFACE MOUNT
RCP-4	157360-01-000	RECEPTACLE-SINGLE,SURFACE MOUNT,20A
RCP-5	160984-01-CHT	RECEPTACLE-SINGLE,FLUSH MOUNT,20A
RCP-B	58707-02-000	RECEPTACLE-BLANK, JUNCTION
RCP-E	131826-01-CHT	INCLUDES COVER & GASKET

RECEPTACLES(AFTER 01-25-10)

NO.	PART NUMBER	DESCRIPTION
RCP-1	176149-02-CHT/176159-01-CHT	RECEPTACLE-SINGLE/PLATE,FLUSH MOUNT
RCP-2	176149-01-CHT/176159-01-CHT	RECEPTACLE-DOUBLE/PLATE,FLUSH MOUNT
RCP-3	176156-01-CHT	RECEPTACLE-SINGLE, SURFACE MOUNT
RCP-4	157360-01-000	RECEPTACLE-SINGLE,SURFACE MOUNT,20A
RCP-5	176144-01-CHT/176159-01-CHT	RECEPTACLE-SINGLE/PLATE,FLUSH MT,20A
RCP-B	176158-01-CHT	RECEPTACLE-BLANK, JUNCTION
RCP-E	131826-01-CHT	INCLUDES COVER & GASKET
SW-1	176157-01-CHT/176159-01-CHT	SWITH-15A,SINGLE POLE/PLATE

CIRCUIT COLOR LEGEND

110V CIRCUIT	WIRE COLOR	COAXIAL CIRCUIT
A/C CIRCUIT 1	RED	CABLE INPUT W/O SPLITTER
A/C CIRCUIT 2	GRN	REAR TV W/O SPLITTER
GENERAL RECPS 1	BLU	ANTENNA
GENERAL RECPS 2	BRN	FRONT TV
GENERAL RECPS 3	PUR	VCR INPUT
GENERAL RECPS 4	GRY	
REFRIGERATOR/ CONVERTER	YEL	EXT ENT CTR
MICROWAVE	BLK	AUX INPUT
WATER HEATER	WHT	
WASHER/DRYER	GLD	
DISHWASHER	SIL	
	ORG	SATELLITE PLATE INPUT
	ORG/ORG	SATELLITE PLATE OUTPUT
	RED/RED	CABLE INPUT W/SPLITTER
	GRN/GRN	REAR TV W/SPLITTER
	PUR/PUR	VCR OUTPUT

FIRST USED: 96 MH'S

DO NOT SCALE DRAWING

TITLE: PART LISTING-ELECTRICAL

SHEET 2 | PART NO 121339 | REV

2/17/2010

DWG NO 121339

LAMP ASM-PACKAGE,PANCAKE

NO	PART NUMBER	DESCRIPTION
LF1-1	LAMP 98024-01-CHT SCREW G11-08-16U (4) CONNECTOR 58028-01-000 (2)	LAMP ASM, FROSTED LENS, 1 BULB W/SWITCH PROGRESSIVE DYNAMICS INC.
LF2-1	LAMP 98024-03-CHT SCREW G11-08-16U (6) CONNECTOR 58028-01-000 (2)	LAMP ASM, FROSTED LENS, 2 BULB W/SWITCH PROGRESSIVE DYNAMICS INC.
LO1-1	LAMP 98024-05-CHT SCREW G11-08-16U (4) CONNECTOR 58028-01-000 (2)	LAMP ASM, OPTI CLEAR LENS, 1 BULB W/SWITCH PROGRESSIVE DYNAMICS INC.
LO2-1	LAMP 98024-06-CHT SCREW G11-08-16U (6) CONNECTOR 58028-01-000 (2)	LAMP ASM, OPTI CLEAR LENS, 2 BULB W/SWITCH PROGRESSIVE DYNAMICS INC.
LF1N1	LAMP 98024-07-CHT SCREW G11-08-16U (4) CONNECTOR 58028-01-000 (2)	LAMP ASM, FROSTED LENS, 1 BULB W/O SWITCH PROGRESSIVE DYNAMICS INC.
LF2N1	LAMP 98024-08-CHT SCREW G11-08-16U (6) CONNECTOR 58028-01-000 (2)	LAMP ASM, FROSTED LENS, 2 BULB W/O SWITCH PROGRESSIVE DYNAMICS INC.
LFSN1	LAMP 98024-09-CHT SCREW G11-08-16U (6) CONNECTOR 58028-01-000 (2)	LAMP ASM, SINGLE FROSTED LENS, 2 BULB W/O SWITCH PROGRESSIVE DYNAMICS INC.

LAMP ASM-PACKAGE,PORCH

NO	PART NUMBER	DESCRIPTION
LEXT-1	LAMP 97917-01-CHT SCREW G67-10-129 (4) CONNECTOR 58028-01-000 (2)	LAMP ASM-PORCH, SURFACE MOUNT BARGMAN
LEXT-2UL	LAMP 8089-01-000 SCREW G68-06-10E (2) CONNECTOR 58028-01-000 (2)	LAMP ASM-PORCH, RECESSED UL LIST JRV PROD
LEXT-2CA	LAMP 8089-02-000 SCREW G68-06-10E (2) CONNECTOR 58028-01-000 (2)	LAMP ASM-PORCH, RECESSED CAN LIST JRV PROD
LEXT-3	LAMP 171513-01-CHT SCREW G67-10-129 (2) CONNECTOR 58028-01-000 (2)	LAMP ASM-PORCH SURFACE MOUNT OPTRONICS

LAMP ASM-PACKAGE,PANCAKE

NO	PART NUMBER	DESCRIPTION
LF1-2	LAMP 137417-01-CHT SCREW G11-08-16U (4) CONNECTOR 58028-01-000 (2)	LAMP ASM, FROSTED LENS, 1 BULB W/SWITCH PROGRESSIVE DYNAMICS INC.
LF2-2	LAMP 137417-04-CHT SCREW G11-08-16U (6) CONNECTOR 58028-01-000 (2)	LAMP ASM, FROSTED LENS, 2 BULB W/SWITCH PROGRESSIVE DYNAMICS INC.
LO1-2	LAMP 137417-02-CHT SCREW G11-08-16U (4) CONNECTOR 58028-01-000 (2)	LAMP ASM, OPTI CLEAR LENS, 1 BULB W/SWITCH PROGRESSIVE DYNAMICS INC.
LO2-2	LAMP 137417-05-CHT SCREW G11-08-16U (6) CONNECTOR 58028-01-000 (2)	LAMP ASM, OPTI CLEAR LENS, 2 BULB W/SWITCH PROGRESSIVE DYNAMICS INC.
LF1N2	LAMP 137417-03-CHT SCREW G11-08-16U (4) CONNECTOR 58028-01-000 (2)	LAMP ASM, FROSTED LENS, 1 BULB W/O SWITCH PROGRESSIVE DYNAMICS INC.
LFSN2	LAMP 137417-06-CHT SCREW G11-08-16U (6) CONNECTOR 58028-01-000 (2)	LAMP ASM, SINGLE FROSTED LENS, 2 BULB W/O SWITCH PROGRESSIVE DYNAMICS INC.

LAMP ASM-PACKAGE,HALOGEN

NO	PART NUMBER	DESCRIPTION
HAL	LAMP 123775-01-CHT SCREW (SUPPLIED) CONNECTOR 58028-01-000 (2)	LAMP ASM-HALOGEN, READING 1 BULB
HAL-S	LAMP 123775-01-CHT SPACER 123775-02-CHT SCREW G13-06-16U (3) CONNECTOR 58028-01-000 (2)	LAMP ASM-HALOGEN, READING WITH 3/4" SPACER 1 BULB
HAL-2	LIGHT-HAL,ROUND 165170-01-CHT SCREW G13-06-12B (2) CONNECTOR 58028-01-000 (2)	LIGHT-HALOGEN, ROUND 3"
HAL-4	LIGHT-HAL,ROUND 165643-01-CHT SCREW G13-05-16B (3) CONNECTOR 58028-01-000 (2) (SEE DETAIL CA)	LIGHT-HALOGEN, ROUND 4.5"

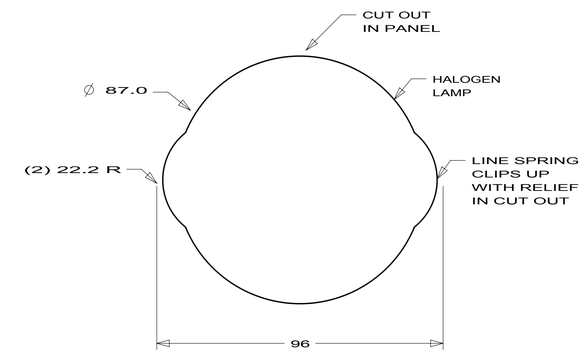

DETAIL CA

LEGEND

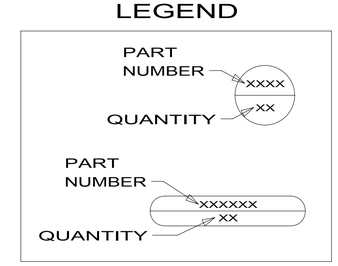

FIRST USED

96 MH'S

DO NOT SCALE DRAWING

TITLE:

PART LISTING-ELECTRICAL

SHEET 3 | PART NO 121339 | REV

2/17/2010

DWG NO 121339

LAMP ASM-PACKAGE,FLUORESCENT

NO	PART NUMBER	DESCRIPTION
FLU-1	LAMP 91936-02-CHT SCREW G11-08-12U (4) CONNECTOR 58028-01-000 (2)	LAMP ASM-FLUORESCENT 12" 2 BULB W/SWITCH THIN-LITE
FLU-2	LAMP 91936-01-CHT SCREW G11-08-12U (4) CONNECTOR 58028-01-000 (2)	LAMP ASM-FLUORESCENT 18" 2 BULB W/SWITCH THIN-LITE
FLU-3	LAMP 127327-01-CHT SCREW G11-08-12U (2) CONNECTOR 58028-01-000 (2)	LAMP ASM-FLUORESCENT 18" 1-12" BULB W/SWITCH THIN-LITE
FLU-4	LAMP 130338-01-CHT SCREW G11-08-12U (4) CONNECTOR 58028-01-000 (2)	LAMP ASM-FLUORESCENT 18" 2 BULB SURFACE MOUNT W/SWITCH THIN-LITE
FLU-5	LAMP 153464-02-CHT SCREW G11-08-12U (4) CONNECTOR 58028-01-000 (2)	LAMP ASM-FLUORESCENT 12" 2 BULB W/SWITCH COOL WHITE BULB THIN-LITE CUTOUT-122 X 336
FLU-6	LAMP 130338-02-CHT SCREW G11-08-12U (4) CONNECTOR 58028-01-000 (2)	LAMP ASM-FLUORESCENT 18" 2 BULB SURFACE MOUNT WARM WHITE BULB W/SWITCH THIN-LITE
FLU-7	LAMP 153464-05-CHT SCREW G11-08-12U (4) CONNECTOR 58028-01-000 (2)	LAMP ASM-FLUORESCENT 12" 2 BULB W/SWITCH WARM WHITE BULB THIN-LITE CUTOUT-122 X 336
FLU-8	LAMP 173072-01-CHT SCREW G11-08-12U (2) CONNECTOR 58028-01-000 (2)	LAMP ASM-FLUORESCENT 18" ONE 8 WATT BULB W/SWITCH OPTRONICS
FLUN1	LAMP 91936-04-CHT SCREW G11-08-12U (4) CONNECTOR 58028-01-000 (2)	LAMP ASM-FLUORESCENT 12" 2 BULB W/O SWITCH THIN-LITE
FLUN2	LAMP 91936-03-CHT SCREW G11-08-12U (4) CONNECTOR 58028-01-000 (2)	LAMP ASM-FLUORESCENT 18" 2 BULB W/O SWITCH THIN-LITE
FLUN3	LAMP 153464-01-CHT SCREW G11-08-12U (4) CONNECTOR 58028-01-000 (2)	LAMP ASM-FLUORESCENT 12" 2 BULB W/O SWITCH COOL WHITE BULB THIN-LITE CUTOUT-122 X 336
FLUN4	LAMP 153464-03-CHT SCREW G11-08-12U (6) CONNECTOR 58028-01-000 (2)	LAMP ASM-FLUORESCENT 18" 2 BULB W/O SWITCH COOL WHITE BULB THIN-LITE CUTOUT-122 X 480
FLUN5	LAMP 153464-06-CHT SCREW G11-08-12U (6) CONNECTOR 58028-01-000 (2)	LAMP ASM-FLUORESCENT 18" 2 BULB W/O SWITCH WARM WHITE BULB THIN-LITE CUTOUT-122 X 480
FLUN6	LAMP 153464-04-CHT SCREW G11-08-12U (6) CONNECTOR 58028-01-000 (2)	LAMP ASM-FLUORESCENT 12" 2 BULB W/O SWITCH WARM WHITE BULB THIN-LITE CUTOUT-122 X 336

LAMP ASM-PACKAGE,MAKEUP LAMP

NO	PART NUMBER	DESCRIPTION
LMU3-1	LAMP 110235-01-CHT SCREW W/SPACER (SUPPLIED) CONNECTOR 58028-01-000 (2)	LAMP ASM-MAKEUP (W/O MIRROR) 3 BULB (SUPPLIED) PROGRESSIVE DYNAMICS
LMM3-2	LAMP 123774-03-CHT SCREW (SUPPLIED) BULB 123918-01-000 (3) CONNECTOR 58028-01-000 (2)	LAMP ASM-MAKEUP (W/MIRROR) 3 BULB GUSTOFSON
LMU3-2	LAMP 138116-01-CHT SCREW (SUPPLIED) BULB 123918-01-000 (3) CONNECTOR 58028-01-000 (2)	LAMP ASM-MAKEUP (W/O MIRROR) 3 BULB GUSTOFSON
LMU3-3	LAMP 162446-01-CHT SCREW (SUPPLIED) BULB 123918-01-000 (3) CONNECTOR 58028-01-000 (2)	LAMP ASM-MAKEUP (W/O MIRROR) 3 BULB GUSTOFSON
LMU4-1	LAMP 110235-02-CHT SCREW G11-08-16U (2) CONNECTOR 58028-01-000 (2)	LAMP ASM-MAKEUP (W/O MIRROR) 4 BULB PROGRESSIVE DYNAMICS
LMU4-2	LAMP 138116-02-CHT SCREW (SUPPLIED) BULB 123918-01-000 (4) CONNECTOR 58028-01-000 (2)	LAMP ASM-MAKEUP (W/O MIRROR) 4 BULB GUSTOFSON
LMU4-3	LAMP 162446-02-CHT SCREW (SUPPLIED) BULB 123918-01-000 (4) CONNECTOR 58028-01-000 (2)	LAMP ASM-MAKEUP (W/O MIRROR) 4 BULB GUSTOFSON
LMM4-2	LAMP 123774-01-CHT SCREW G11-08-16U (2) BULB 123918-01-000 (4) CONNECTOR 58028-01-000 (2)	LAMP ASM-MAKEUP (W/MIRROR) 4 BULB GUSTOFSON

LAMP ASM-PACKAGE,OTHER

NO	PART NUMBER	DESCRIPTION
LSH-1	LAMP 121935-01-CHT SCREW G11-08-16U (4) CONNECTOR 58028-01-000 (2)	LAMP ASM-SHOWER PROGRESSIVE DYNAMICS INC.
LSH-2	LAMP 164039-01-CHT SCREW G11-08-16U (3) CONNECTOR 58028-01-000 (2)	LIGHT-DOME,SHOWER
LSH-3	LAMP 164040-01-CHT SCREW G13-07-12U (3) CONNECTOR 58028-01-000 (2)	LIGHT-DOME,SHOWER GLASS
LCR-1	LAMP 61424-01-000 SCREW G11-08-12U (4) CONNECTOR 58028-01-000 (2)	LAMP ASM-COURTESY,AISLE RAMCO (RECTANGULAR)
LCS-1	LAMP 108354-01-CHT SCREW G11-08-12U (4) CONNECTOR 58028-01-000 (2)	LAMP ASM-COURTESY,AISLE ITC MARINE (SQUARE)
READ-1	LIGHT-READING 132427-01-CHT SCREW SUPPLIED W/ LIGHT CLIP-U 141395-02-CHT (2) CONNECTOR 58028-01-000 (2)	LIGHT-READING,SWIVEL,ROUND 1 BULB
READ-2	LIGHT-READING 128786-02-CHT SCREW G11-08-16J (2) BULB 123917-01-000 CONNECTOR 58028-01-000 (2)	LIGHT,READING,SWIVEL
READ-3	LIGHT-READING 170833-01-CHT SCREW SUPPLIED W/LIGHT CONNECTOR 58028-01-000 (2)	LIGHT,READING,HAL
READ-4	LIGHT-READING, LED,FLEX 174060-01-CHT SCREW SUPPLIED W/LIGHT CONNECTOR 58028-01-000 (2)	LIGHT,READING,LED,FLEX
READ-5	LIGHT-READING, LED,SWIVEL 174815-01-CHT SCREW SUPPLIED W/LIGHT CONNECTOR 58028-01-000 (2)	LIGHT,READING, LED SWIVEL .05 A

LAMP ASM-PACKAGE,PANCAKE

NO	PART NUMBER	DESCRIPTION
LF1-3	LAMP 170693-01-CHT SCREW G11-08-16U (4) CONNECTOR 58028-01-000 (2)	LAMP ASM, FROSTED LENS, 1 BULB W/SWITCH GUSTAFSON
LF2-3	LAMP 170693-04-CHT SCREW G11-08-24U (4) CONNECTOR 58028-01-000 (2)	LAMP ASM, FROSTED LENS, 2 BULB W/SWITCH GUSTAFSON
LO1-3	LAMP 170693-02-CHT SCREW G11-08-16U (4) CONNECTOR 58028-01-000 (2)	LAMP ASM, OPTI CLEAR LENS, 1 BULB W/SWITCH GUSTAFSON
LO2-3	LAMP 170693-05-CHT SCREW G11-08-24U (4) CONNECTOR 58028-01-000 (2)	LAMP ASM, OPTI CLEAR LENS, 2 BULB W/SWITCH GUSTAFSON
LF1N3	LAMP 170693-03-CHT SCREW G11-08-16U (4) CONNECTOR 58028-01-000 (2)	LAMP ASM, FROSTED LENS, 1 BULB W/O SWITCH GUSTAFSON
LFSN3	LAMP 170693-06-CHT SCREW G11-08-24U (4) CONNECTOR 58028-01-000 (2)	LAMP ASM, SINGLE FROSTED LENS, 2 BULB W/O SWITCH GUSTAFSON
LOSN3	LAMP 170693-07-CHT SCREW G11-08-24U (4) CONNECTOR 58028-01-000 (2)	LAMP ASM, OPTICLEAR LENS, 2 BULB W/O SWITCH GUSTAFSON
LO1N3	LAMP 170693-08-CHT SCREW G11-08-16U (4) CONNECTOR 58028-01-000 (2)	LAMP ASM, OPTICLEAR LENS, 1 BULB W/O SWITCH GUSTAFSON

LEGEND

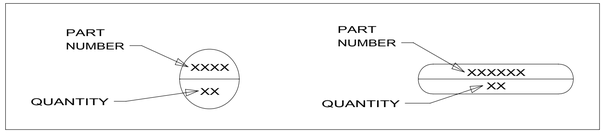

FIRST USED: 96 MH'S

DO NOT SCALE DRAWING

TITLE: PART LISTING-ELECTRICAL

SHEET 4 | PART NO 121339 | REV

2/17/2010

DWG NO 121339

ANTENNA ASM-PACKAGE

NO	PART NUMBER	DESCRIPTION
ANT-1	ANTENNA 76319-24-000 HARDWARE-INTERIOR 76319-25-000 BUMPER 69726-02-000 (2) 1 CLIP 80734-02-000	ROOF MOUNT TV ANTENNA ASM 25.5" MAST 600 MAX COAX LENGTH
ANT-2	ANTENNA 076319-23-000(UP TO 05-31-09) 173519-01-CHT(AFTER 06-01-09) HARDWARE-INTERIOR 76319-25-000 BUMPER 69726-02-000 (2) 1 ADAPTER SUPPLIED W/ANTENNA	ROOF MOUNT TV ANTENNA ASM 44.5" MAST 600 MAX COAX LENGTH
ANT-2W	ANTENNA 076319-23-000(UP TO 05-31-09) 173519-01-CHT(AFTER 06-01-09) HARDWARE-INTERIOR 76319-25-000 BUMPER 69726-02-000 (2) 1 ADAPTER SUPPLIED W/ANTENNA WEDGE 76319-26-000	ROOF MOUNT TV ANTENNA ASM 44.5" MAST 600 MAX COAX LENGTH
ANTA-1	ANTENNA 158270-01-CHT BUMPER 69726-02-000 (2) 1 ADAPTER SUPPLIED W/ANTENNA ANTENNA-WINGMAN, ACCESSORY 173519-03-CHT	ROOF MOUNT TV ANTENNA ASM AUTOMATIC 600 MAX COAX LENGTH
ANT-3	ANTENNA-TV ROOF MNT,ROUND 167632-01-CHT PLATE-ROOF, CABLE ENTRY 146488-01-000 SCREW G67-10-129 (10) CABLE ASM-COAX 87105-01-006 ADAPTER 82134-01-000	ROOF MOUNT OMNI- DIRECTIONAL ANTENNA MOUNTING SCREWS SUPPLIED WITH ANTENNA
ANT-4	ANTENNA 173519-01-CHT HARDWARE-INTERIOR 76319-25-000 BUMPER 69726-02-000 (2) 1 ADAPTER SUPPLIED W/ANTENNA ANTENNA-HANDLE EXTENSION 173519-02-CHT	ROOF MOUNT TV ANTENNA ASM 44.5" MAST 600 MAX COAX LENGTH

SENSORS

NO	PART NUMBER	DESCRIPTION
LPGD	LP GAS DETECTOR 150138-03-CHT SCREW G68-06-10U (2)	DETECTOR-LP GAS

PANELS

NO	PART NUMBER	DESCRIPTION
SOLAR	PANEL-SOLAR 10 WATT 151647-01-000 (UP TO 03-14-10) 176161-01-000 (AFTER 03-15-10) SCREW G11-08-12U (4)	SOLAR PANEL

ANTENNA ASM-PACKAGE

ANTEXT-1	CABLE ASM-EXTENS 77069-02-000	RADIO ANTENNA CABLE EXTENSION 2400MM USABLE LENGTH
ANTKIT-1	ADAPTER-PLATE 76319-06-000 SCREW G11-08-08T (6) CLIP-WIRE 80734-02-000 SCREW G11-08-08T	PLATE ASM-ADAPTERS CABLE ROOF MOUNTING PLATE W/ CABLE-CABLE ADAPTER, FITTINGS, AND CABLE RETAINING CLIP
ANT-R	ANTENNA-RADIO 90944-01-000 EXTENDER-SHAFT ANTENNA 109889-04-000 BRACKET-ANTENNA GROUND 147741-01-CHT	ROOF MOUNT RADIO ANTENNA
ANTEXT-2	CABLE ASM-EXTENS 77069-03-000	RADIO ANTENNA CABLE EXTENSION 6600 MM USABLE LENGTH
ANT-A	ANTENNA-RADIO 90944-01-000 EXTENDER-SHAFT 76 MM 171825-01-000 (2) BRACKET-GROUND 147741-01-CHT NUT OMD01K-06-000 (2)	ROOF MOUNT RADIO ANTENNA THICK ROOF

SATELLITE DISH INSTL

NO	PART NUMBER	DESCRIPTION
DM-1	SATELLITE DISH 137135-02-000 SCREW G67-10-12B (8) PLATE & BRACKET (SUPPLIED) SCREW G67-10-12B (10)	SATELLITE DISH ANTENNA ASM MANUAL SETUP
DA-1	SATELLITE DISH 163598-01-CHT PLATE-ROOF,CABLE ENTRY QUAD 146488-03-000 SCREW G67-10-12U (8) (FOR PLATE) SCREW G39-10-12U (12) (FOR SATELLITE DISH)	SATELLITE DISH ANTENNA ASM AUTOMATIC SETUP
DI-1	SATELLITE DISH 154474-04-CHT SCREW G39-10-12B (12) PLATE 146488-01-000 SCREW G67-10-12B (10)	SATELLITE DISH ANTENNA ASM IN MOTION SETUP

SATELLITE DISH INSTL

NO	PART NUMBER	DESCRIPTION
DA-2	SATELLITE DISH 163598-01-CHT PLATE-ROOF,CABLE ENTRY QUAD 146488-03-000 CABLE ASM-COAX 9" 163598-04-000 ADAPTOR-CABLE TO CABLE 82134-01-000 SCREW G67-10-12U (8) (FOR PLATE) SCREW G39-10-12U (12) (FOR SATELLITE DISH)	SATELLITE DISH ANTENNA ASM AUTOMATIC SETUP
DI-2	SATELLITE DISH 154474-04-CHT PLATE-ROOF,CABLE ENTRY QUAD 146488-03-000 CABLE ASM-COAX 9" 163598-04-000 ADAPTOR-CABLE TO CABLE 82134-01-000 SCREW G67-10-12U (8) (FOR PLATE) SCREW G39-10-12U (12) (FOR SATELLITE DISH)	SATELLITE DISH ANTENNA ASM AUTOMATIC SETUP
DM-2	SATELLITE DISH 137135-05-000 PLATE-ROOF,ENTRY (SUPPLIED WITH SATELLITE DISH) SCREW G67-10-12U (8) (FOR ROOF PLATE) SCREW G67-10-12U (10) (FOR SATELLITE DISH)	SATELLITE DISH ANTENNA ASM MANUAL SETUP

LEGEND

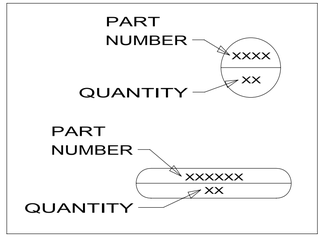

1 ADD BUMPER TO BOTTOM SIDE OF ANTENNA WINGS TO PREVENT DAMAGE TO ROOF.

FIRST USED
96 MH'S

DO NOT SCALE DRAWING

TITLE:
PART LISTING-ELECTRICAL

SHEET 5 | PART NO 121339 | REV

2/17/2010

DWG NO 121339

RECEPTACLE PACKAGE-GFI

NO	PART NUMBER	DESCRIPTION
GFI US	RECEPTACLE 163319-01-CHT BOX 91910-02-000 WIRE-BONDING 133678-03-000 SCREW G13-07-12B (4) CONNECTOR 8313-01-000 TUBING-VINYL 8041-02-000 (300MM) 1	GFI RECEPTACLE WITH COVER AND BOX FOR US APPLICATION 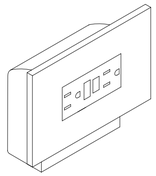
GFI CAN	RECEPTACLE 163319-01-CHT BOX 91910-01-000 WIRE-BONDING 133678-03-000 SCREW G13-07-12B (4) CONNECTOR 8313-01-000 TUBING-VINYL 8041-02-000 (300MM) 1	GFI RECEPTACLE WITH COVER AND BOX FOR CANADA APPLICATION 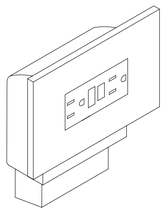

RECEPTACLE PACKAGE-GFI

NO	PART NUMBER	DESCRIPTION
GFI-1 US	RECEPTACLE 163319-01-CHT BOX 133070-01-000 WIRE-BONDING 133678-03-000 SCREW G13-07-12B (4) CONNECTOR 8313-01-000 TUBING-VINYL 8041-02-000 (300MM) 1	GFI RECEPTACLE WITH COVER AND BOX FOR US APPLICATION 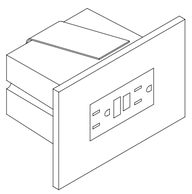
GFI-1 CAN	RECEPTACLE 163319-01-CHT BOX 133070-02-000 WIRE-BONDING 133678-03-000 SCREW G13-07-12B (4) CONNECTOR 8313-01-000 TUBING-VINYL 8041-02-000 (300MM) 1	GFI RECEPTACLE WITH COVER AND BOX FOR CANADA APPLICATION 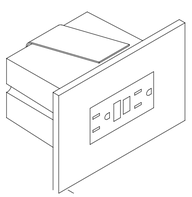

SPACERS

NO	PART NUMBER	DESCRIPTION
SP-01	SPACER 102568-01-XXX	STANDARD 110V RECEPTACLE SPACER (WOOD,VYL RAP,OG) 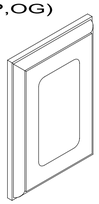
SP-02	SPACER 102568-02-XXX	WOOD SPACER FOR CEILING MOUNTED A/C PREP BOX (US) (WOOD,VYL RAP,OG) 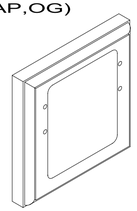
SP-03	SPACER 102568-03-XXX	WOOD SPACER FOR CEILING MOUNTED A/C PREP BOX (CANADA) (WOOD,VYL RAP,OG) 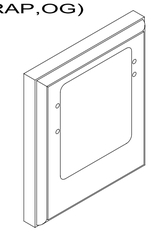
SP-04	SPACER 133713-01-CHT	STANDARD 110V RECEPTACLE SPACER (WOOD,VYL RAP,BEV) 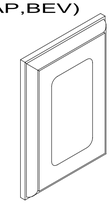
SP-05	SPACER 133713-20-XXX	STANDARD 110V RECEPTACLE SPACER (WOOD,BEV) 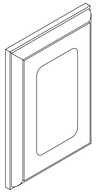
SP-21	SPACER 126052-01-XXX	WOOD SPACER FOR 1 - 110V RECEPTACLE AND 1 - REAR TV (12V) JACK (WOOD,BEV) 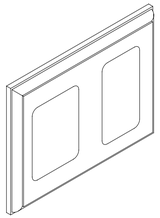

LEGEND

MISC.	SPACER
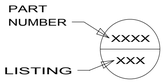	

1 APPLY TUBING TO BARE GROUND WIRES.

NOTES:

FIRST USED 96 MH'S

DO NOT SCALE DRAWING

TITLE: PART LISTING-ELECTRICAL

SHEET 6 | PART NO 121339 | REV

2/17/2010

DWG NO 121339

PREP-A/C,RECESSED (W/OUT FACTORY A/C)

NO	PART NUMBER	DESCRIPTION
PREP A/C-US	BOX 91910-02-000 COVER 84099-02-CHT LABEL 91243-01-000 SCREW G13-07-12B (4) CONNECTOR 8313-01-000 (3)	BOX AND EQUIPMENT USED FOR A/C PREP (W/OUT FACTORY A/C). US APPLICATION (RECESSED IN ROOF) 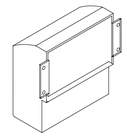
PREP A/C-CAN	BOX 91910-01-000 COVER 84099-02-CHT LABEL 91243-01-000 SCREW G13-07-12B (4) CONNECTOR 8313-01-000 (3)	BOX AND EQUIPMENT USED FOR A/C PREP (W/OUT FACTORY A/C). CANADA APPLICATION (RECESSED IN ROOF) 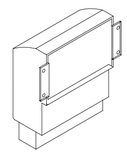

CONNECTION BOX-POWER CORD

NO	PART NUMBER	DESCRIPTION
J-PC 30 J-PC 30-US J-PC 30-CA	BOX 8289-01-000 COVER 8294-01-000 SCREW G67-10-10B (2) WIRE ASM-GROUND 133678-02-000 CONNECTOR 8314-01-000 (3) CONNECTOR 8356-02-000 CONNECTOR (PC) 8355-01-000	CONNECTION BOX IN POWER CORD COMPT FOR POWER CORD (US & CA APPLICATION) 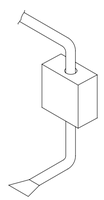

CONNECTION BOX-GENERATOR RECEPTACLE

NO	PART NUMBER	DESCRIPTION
J-RCP 30 J-RCP 30-US J-RCP 30-CA	BOX 8289-01-000 RECEPTACLE 24924-02-000 COVER 69238-01-000 SCREW G67-10-10B (2) WIRE ASM-GROUND 133678-02-000 133678-04-000 CONNECTOR 8314-01-000 TUBING-VINYL 8041-02-000 (150MM) 1	CONNECTION BOX IN POWER CORD COMPT FOR THE GENERATOR RECEPTACLE (US & CA APPLICATION) 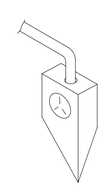

CONNECTION BOX, GENERATOR SERVICE FEED

NO	PART NUMBER	DESCRIPTION
J-GEN 30 J-GEN 30-US J-GEN 30-CA	BOX 8289-01-000 COVER 8294-01-000 SCREW G67-10-10B (2) WIRE ASM-GROUND 133678-02-000 WIRE NUT-GREY 8314-01-000 (3) CONNECTOR-WIRE 8356-01-000	BOX AND EQUIPMENT USED FOR CONNECTING THE GENERATOR LEADS TO THE SERVICE ENTRANCE WIRES (US & CA APPLICATION) 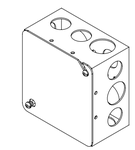

PREP-A/C,SURFACE (W/OUT FACTORY A/C)

NO	PART NUMBER	DESCRIPTION
PREP SURF	BOX 93603-01-000 COVER 53337-01-000 LABEL 91243-01-000 WIRE-BONDING 8019-01-000 SCREW G11-08-12B (2) TERMINAL 8328-01-000 CONNECTOR 8313-01-000 (2) CONNECTOR 8311-01-000	SURFACE MOUNT, US AND CANADA, BOX AND EQUIPMENT FOR A/C PREP (W/OUT FACTORY A/C). TYPICALLY LOCATED ON OVERHEAD CABINET INNER WALL OR ON CEILING. 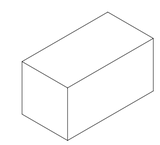

LEGEND

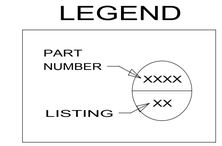

1 APPLY TUBING TO BARE GROUND WIRES.

NOTES:

FIRST USED	96 MH'S
	DO NOT SCALE DRAWING
TITLE:	PART LISTING-ELECTRICAL
SHEET 7	PART NO 121339 REV

2/17/2010

RELEASE	REV A	DATE	DWG NO 170192

REV	ZONE	REVISION RECORD	DATE	DFTR-ORIG

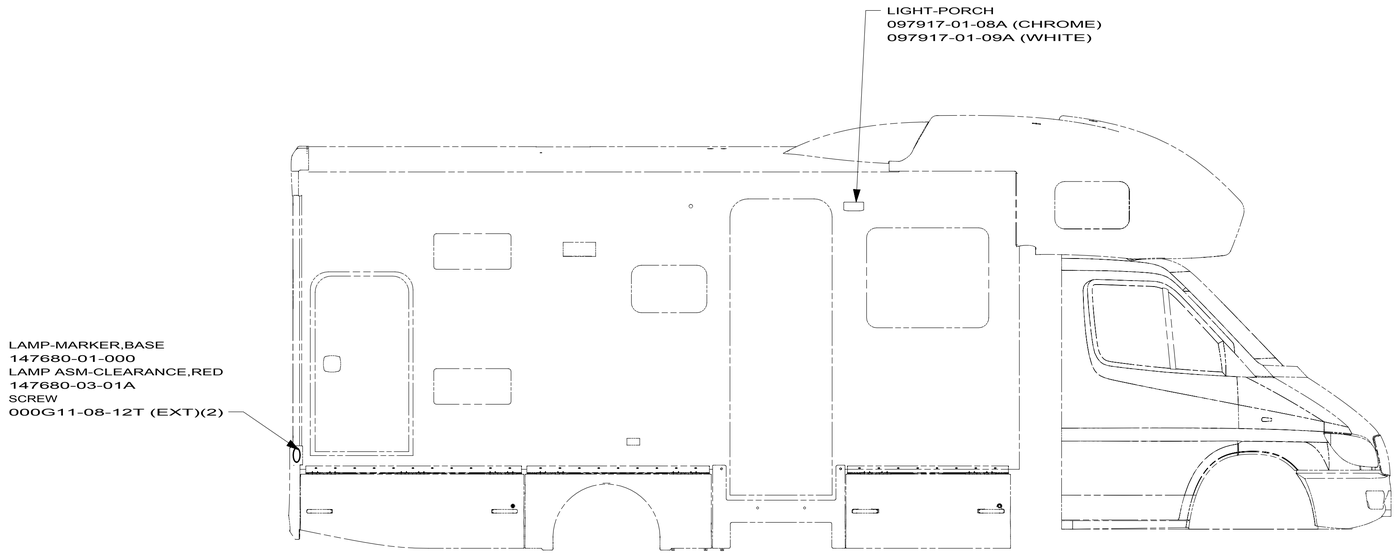

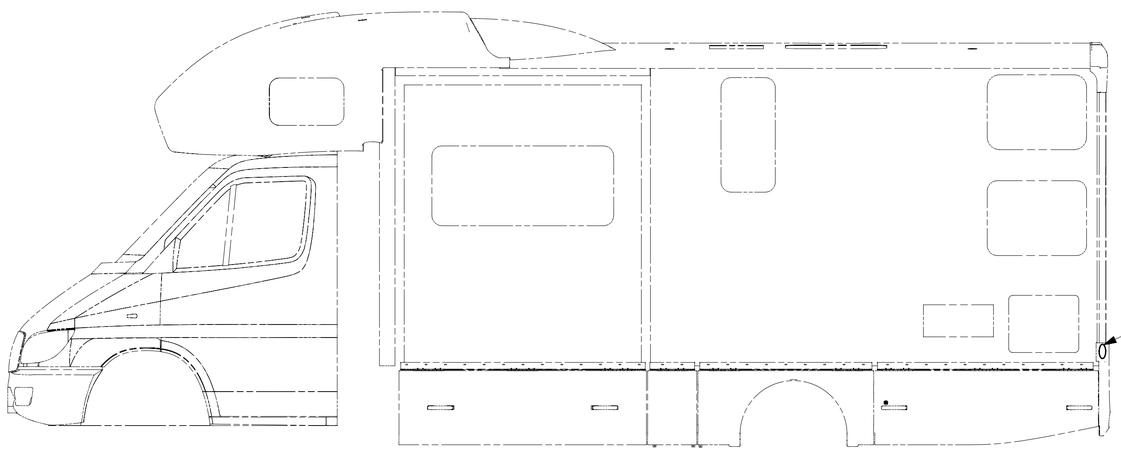

265 CODES/STANDARDS-CSA/CMVSS

1B1 CODES/STANDARDS USA

1B1 265

X-X

FOR ELECTRICAL CALLOUTS SEE DWG NO. 121339-01-000

FOR ELECTRICAL TORQUE SPECIFICATIONS SEE DWG NO. 128783-01-000

COPYRIGHT 2009
WINNEBAGO
INDUSTRIES, INC.

DFTR	ORIG. DATE
CHKR	ALL DIMENSIONS ARE IN MILLIMETERS
P.E.	
M.E.	FIRST USED
DSNR	10 500-SER

UNSPECIFIED TOLERANCES ARE:
WHOLE DIM (X) :
ONE-PLACE (X.X) :
TWO-PLACE (X.XX) :
ANGLE :

THIRD ANGLE PROJECTION

MATERIAL:

DO NOT SCALE DRAWING

TITLE:
WIRING INSTL-EXTERIOR LAMPS

SHEET 1 OF 2	PART NO 170192	REV

REF: 1

12/22/2009

DWG NO 170192

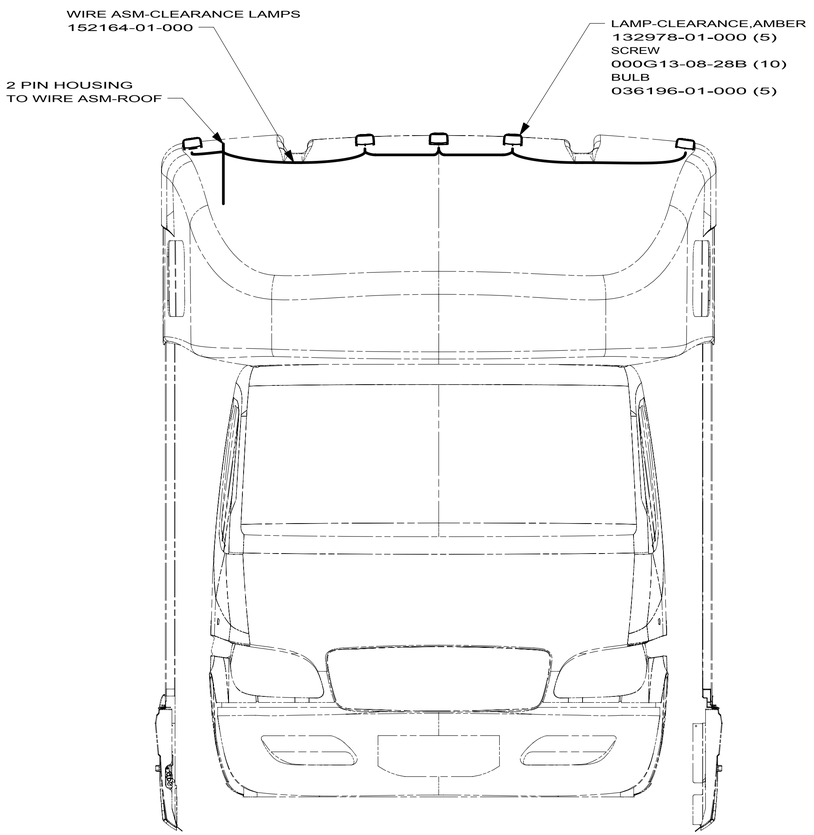

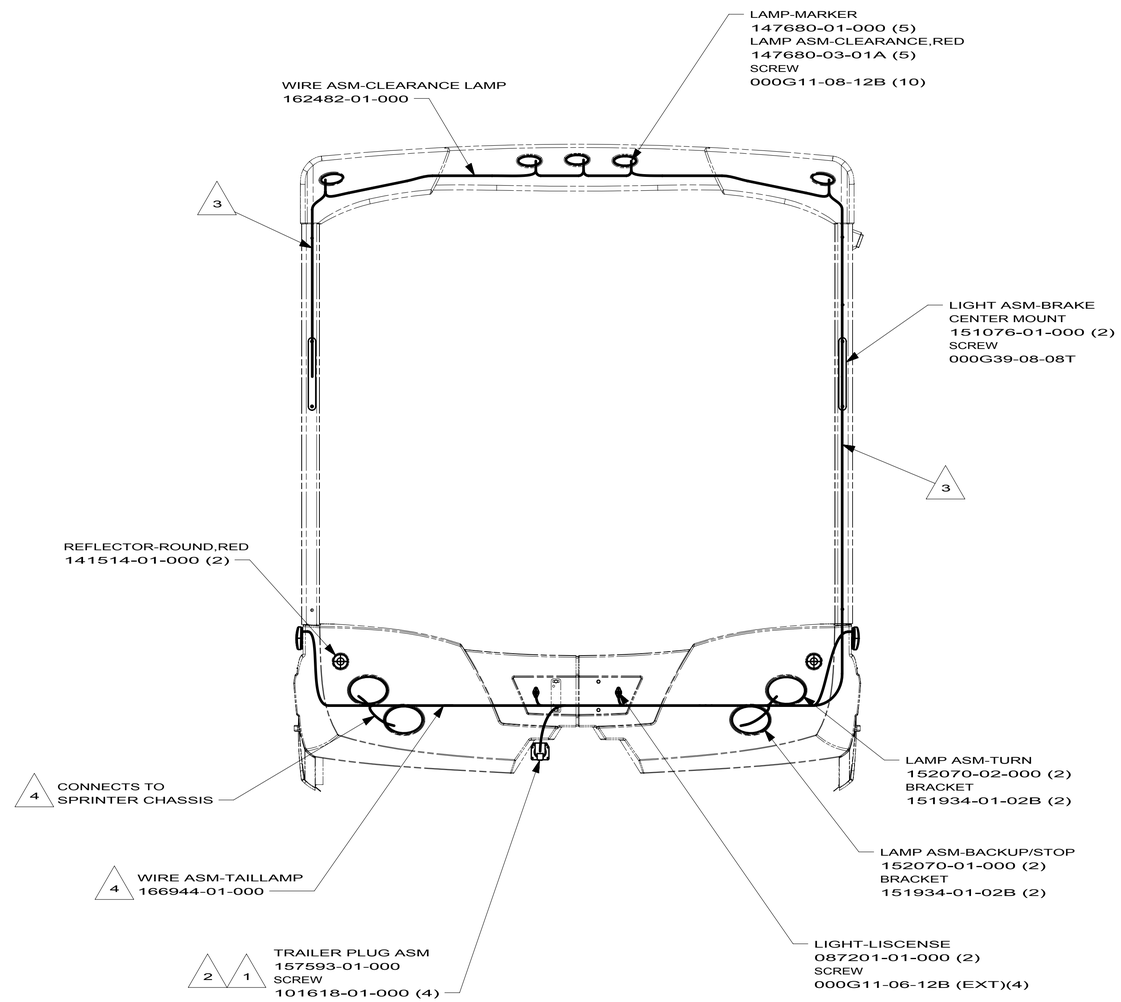

NOTES:

4. REMOVE ETENSION LOOMS THAT ARE SUPPLIED WITH CHASSIS. THE CHASSIS IS SUPPLIED WITH TWO 7-PIN CONNECTORS ALONG THE LEFT SIDE FRAME RAIL. THE CHASSIS WIRING WITH THE TWO 7-PIN CONNECTORS HAS A LONGER DROP AND A SHORTER DROP. ATTACH THE LONGER DROP TO THE WIRE ASM-TAILLAMP CONNECTOR WITH ONLY 2 PINS IN IT. ATTACH THE SHORTER DROP TO THE WIRE ASM-TAILLAMP CONNECTOR WITH 5 PINS.

3. RUN WIRE THROUGH THE INSIDE OF ALUMINUM EXTRUSION.

2. SECURE WIRE BELOW COACH WITH CLAMP 010495-01-000 AND SCREW 000G67-10-12B.

1. CONNECTOR-PLUG, TRAILER 146246-01-000 TO BE SUPPLIED LOOSE IN COACH WITH TRAILER TOW PACKAGE.

265 CODES/STANDARDS-CSA/CMVSS

1B1 CODES/STANDARDS USA

FOR ELECTRICAL TORQUE SPECIFICATIONS SEE DWG NO. 128783-01-000

X-X FOR ELECTRICAL CALLOUTS SEE DWG NO. 121339-01-000

1B1 265

FIRST USED 10 500-SER

DO NOT SCALE DRAWING

TITLE: WIRING INSTL-EXTERIOR LAMPS

SHEET 2 | PART NO 170192 | REV

12/22/2009

097917-01-08A/09A

KEY	PART NUMBER	U/M	DESCRIPTION	VENDOR NO.
	097917-01-700	EA	LENS-LIGHT, CLEAR	30-78-021

COPYRIGHT © 2009 WINNEBAGO INDUSTRIES INC.

DRAWING NO.	MODEL	SHEETS
170189-01	524A	1,2
170189-02	524J	3,4,13,14
170189-03	524K	5,6,13,14
170189-04	524P	7,8,13,14
170189-05	524CL	9,10
170189-06	524DL	11,12

RELEASE	REV	DATE	DWG NO
	A		170189

REV	ZONE	REVISION RECORD	DATE	DFTR-ORIG

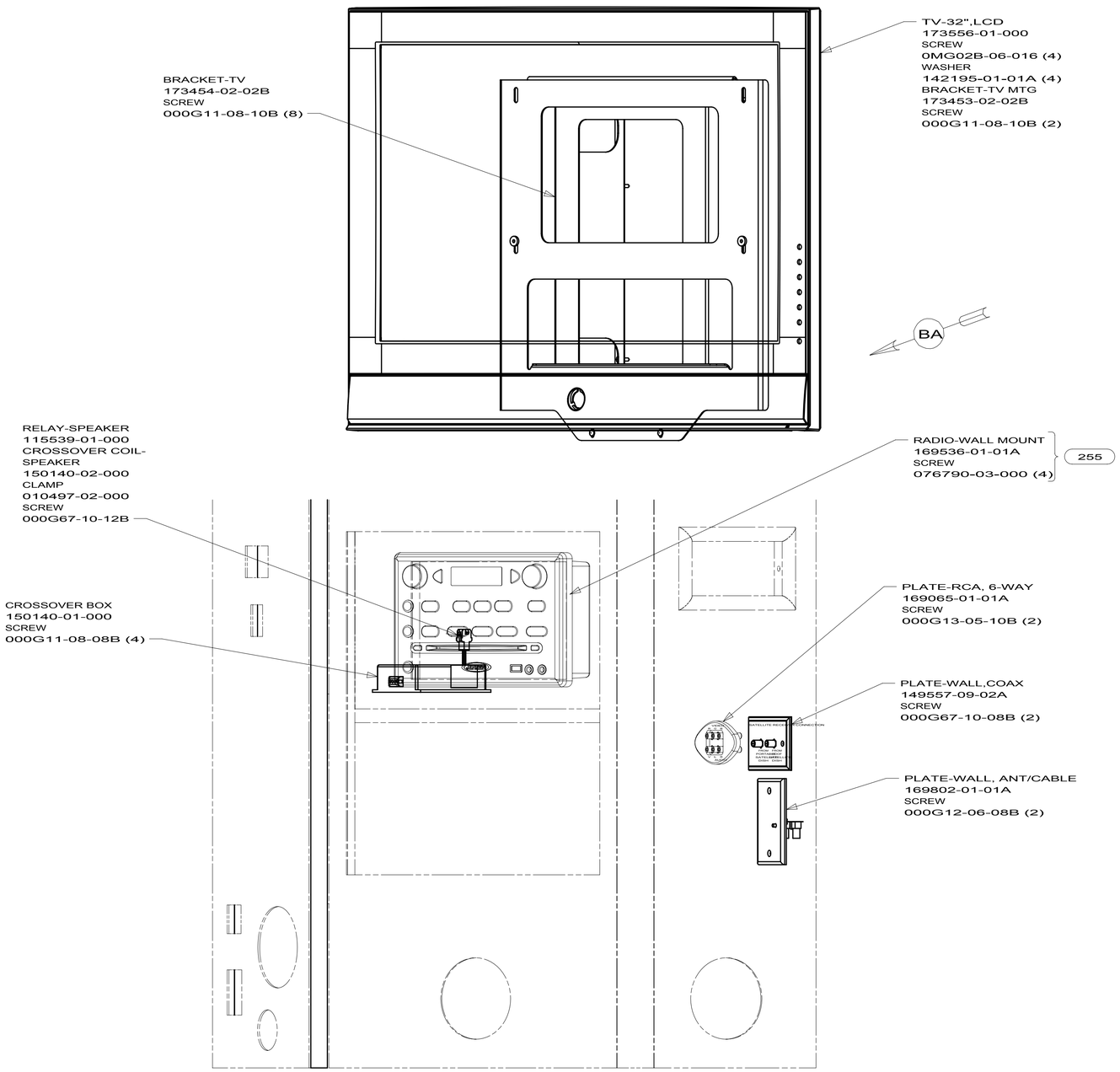

524A
170189-01

255 RADIO/AM/FM/CD/DVD PLAYER

42K TV-32" COLOR,STEREO W/REMOTE

265 CODES/STANDARDS-CSA/CMVSS

1B1 CODES/STANDARDS USA

1B1 265 42K

WINNEBAGO INDUSTRIES

COPYRIGHT 2009
WINNEBAGO
INDUSTRIES, INC.

DFTR	ORIG. DATE
CHKR	ALL DIMENSIONS ARE IN MILLIMETERS
P.E.	
M.E.	FIRST USED
DSNR	10 500-SERIES

UNSPECIFIED TOLERANCES ARE:

WHOLE DIM (X)	±	3
ONE-PLACE (X.X)	±	1.5
TWO-PLACE (X.XX)	±	0.50
ANGLE	±	1°

MATERIAL:

THIRD ANGLE PROJECTION

DO NOT SCALE DRAWING

TITLE: WIRING INSTL-TV/DVD

SHEET 1 OF 12 | PART NO 170189 | REV

FOR ELECTRICAL TORQUE SPECIFICATIONS SEE DWG NO. 128783-01-000

X-X FOR ELECTRICAL CALLOUTS SEE DWG NO. 121339-01-000

REF: 1

12/18/2009

DWG NO 170189

(UP TO 09-16-09)

524A
170189-01

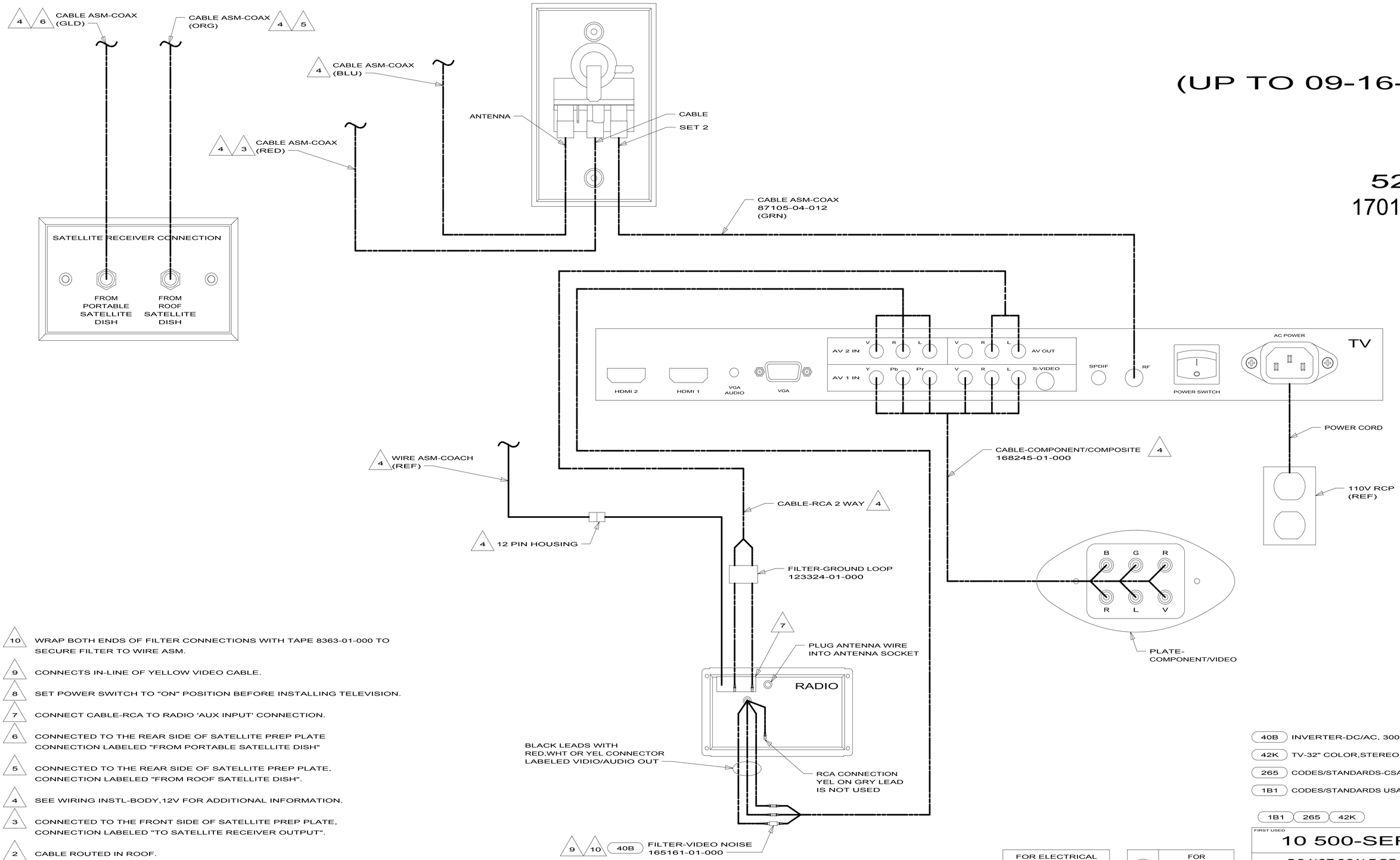

DETAIL BA

10 WRAP BOTH ENDS OF FILTER CONNECTIONS WITH TAPE 8363-01-000 TO SECURE FILTER TO WIRE ASM.

9 CONNECTS IN-LINE OF YELLOW VIDEO CABLE.

8 SET POWER SWITCH TO "ON" POSITION BEFORE INSTALLING TELEVISION.

7 CONNECT CABLE-RCA TO RADIO 'AUX INPUT' CONNECTION.

6 CONNECTED TO THE REAR SIDE OF SATELLITE PREP PLATE CONNECTION LABELED "FROM PORTABLE SATELLITE DISH"

5 CONNECTED TO THE REAR SIDE OF SATELLITE PREP PLATE, CONNECTION LABELED "FROM ROOF SATELLITE DISH".

4 SEE WIRING INSTL-BODY,12V FOR ADDITIONAL INFORMATION.

3 CONNECTED TO THE FRONT SIDE OF SATELLITE PREP PLATE, CONNECTION LABELED "TO SATELLITE RECEIVER OUTPUT".

2 CABLE ROUTED IN ROOF.

1 CONNECTED TO THE REAR SIDE OF SATELLITE PREP PLATE, CONNECTION LABELED "TO SATELLITE RECEIVER OUTPUT".

NOTES:

40B INVERTER-DC/AC, 300 WATT

42K TV-32" COLOR,STEREO W/REMOTE

265 CODES/STANDARDS-CSA/CMVSS

1B1 CODES/STANDARDS USA

1B1 265 42K

FOR ELECTRICAL TORQUE SPECIFICATIONS SEE DWG NO. 128783-01-000

X-X FOR ELECTRICAL CALLOUTS SEE DWG NO. 121339-01-000

FIRST USED 10 500-SERIES

DO NOT SCALE DRAWING

TITLE: WIRING INSTL-TV/DVD

SHEET 2A PART NO 170189 REV

10/1/2009

DWG NO 170189

524A
170189-01
(AFTER 09-17-09)

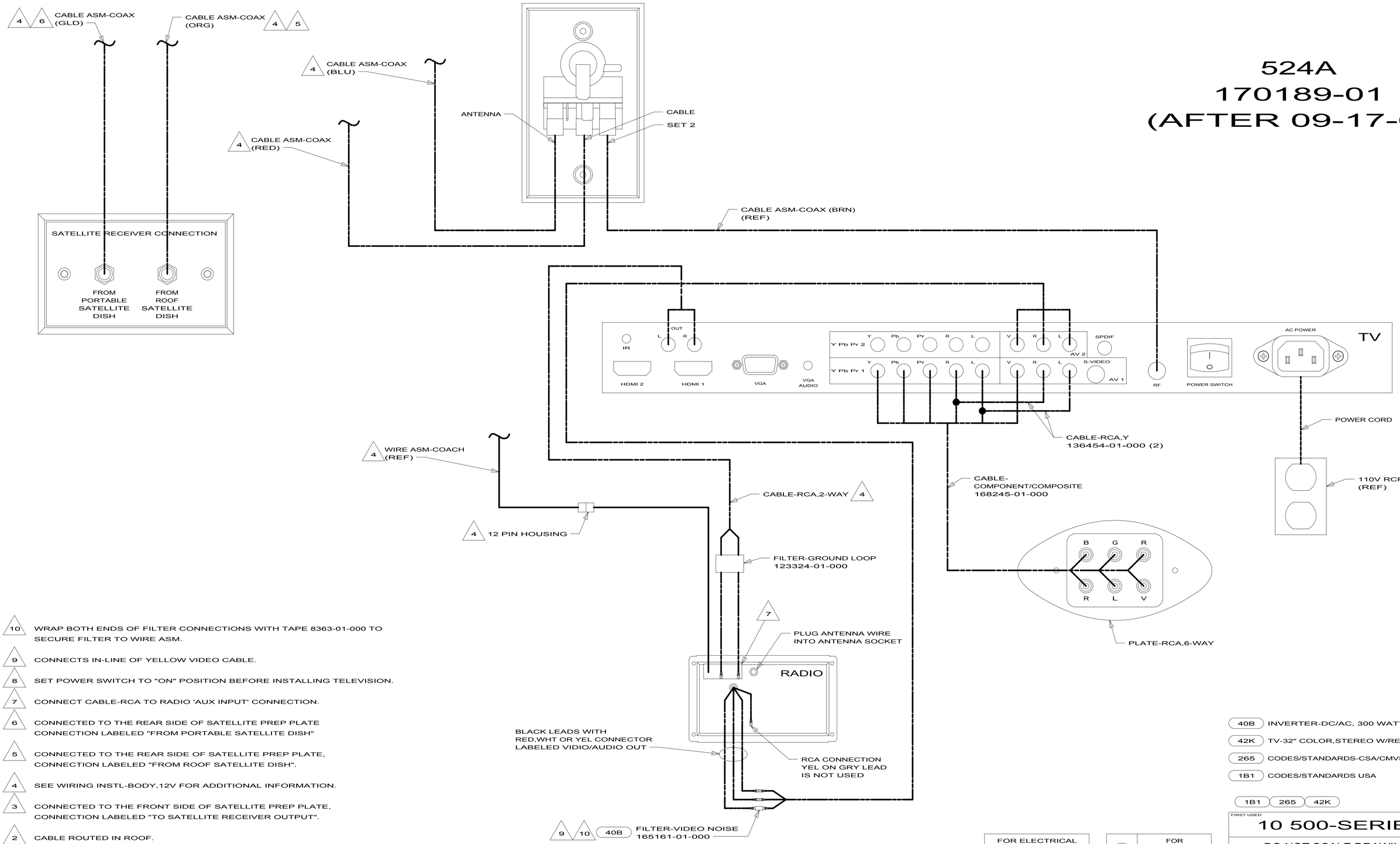

DETAIL BA

10 WRAP BOTH ENDS OF FILTER CONNECTIONS WITH TAPE 8363-01-000 TO SECURE FILTER TO WIRE ASM.

9 CONNECTS IN-LINE OF YELLOW VIDEO CABLE.

8 SET POWER SWITCH TO "ON" POSITION BEFORE INSTALLING TELEVISION.

7 CONNECT CABLE-RCA TO RADIO 'AUX INPUT' CONNECTION.

6 CONNECTED TO THE REAR SIDE OF SATELLITE PREP PLATE CONNECTION LABELED "FROM PORTABLE SATELLITE DISH"

5 CONNECTED TO THE REAR SIDE OF SATELLITE PREP PLATE, CONNECTION LABELED "FROM ROOF SATELLITE DISH".

4 SEE WIRING INSTL-BODY,12V FOR ADDITIONAL INFORMATION.

3 CONNECTED TO THE FRONT SIDE OF SATELLITE PREP PLATE, CONNECTION LABELED "TO SATELLITE RECEIVER OUTPUT".

2 CABLE ROUTED IN ROOF.

1 CONNECTED TO THE REAR SIDE OF SATELLITE PREP PLATE, CONNECTION LABELED "TO SATELLITE RECEIVER OUTPUT".

NOTES:

40B INVERTER-DC/AC, 300 WATT

42K TV-32" COLOR,STEREO W/REMOTE

265 CODES/STANDARDS-CSA/CMVSS

1B1 CODES/STANDARDS USA

1B1 265 42K

FOR ELECTRICAL TORQUE SPECIFICATIONS SEE DWG NO. 128783-01-000

X-X FOR ELECTRICAL CALLOUTS SEE DWG NO. 121339-01-000

FIRST USED 10 500-SERIES

DO NOT SCALE DRAWING

TITLE: WIRING INSTL-TV/DVD

SHEET 2B PART NO 170189 REV

12/18/2009

169536-01-01A

KEY	PART NUMBER	U/M	DESCRIPTION	VENDOR NO.
	169536-01-700	EA	REMOTE - SERVICE PACK	PSVCAWM970

COPYRIGHT © 2009 WINNEBAGO INDUSTRIES INC.

173556-01-000

KEY	PART NUMBER	U/M	DESCRIPTION	VENDOR NO.
	173556-01-700	EA	REMOTE - SERVICE PACK	PSVCJE3208

COPYRIGHT © 2010 WINNEBAGO INDUSTRIES INC.

DWG NO 169847

500-SERIES
169847-03

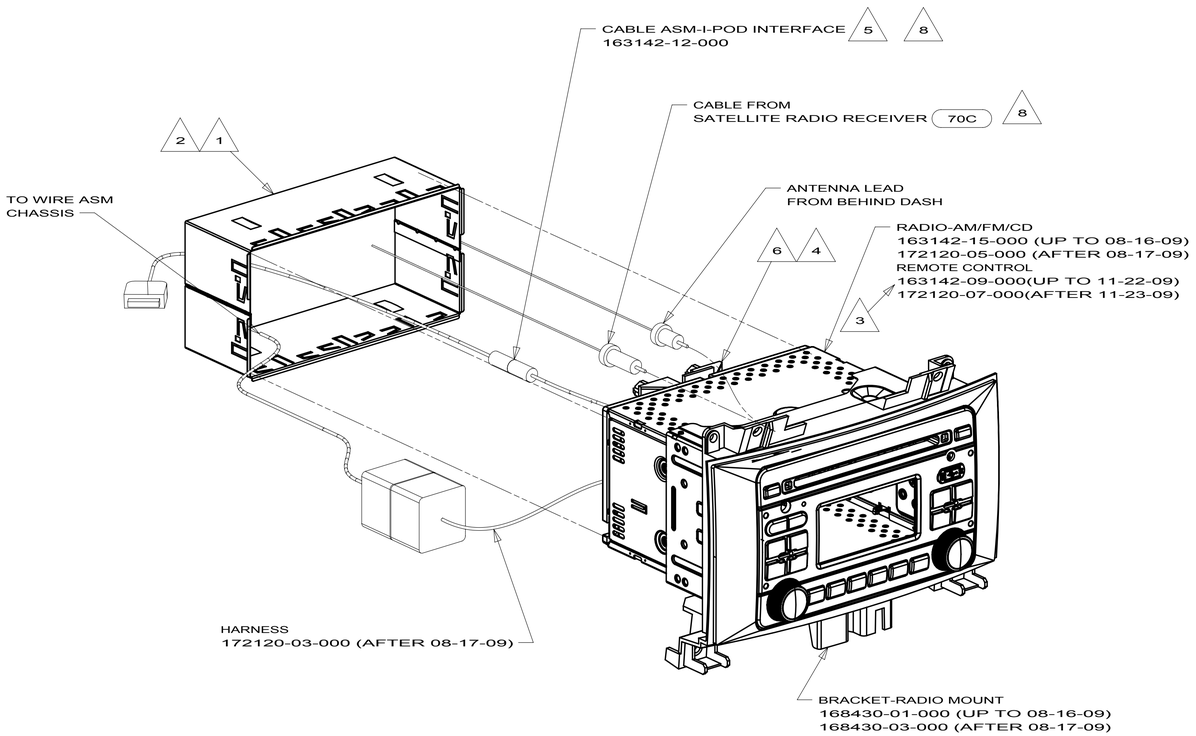

H-SERIES
500-SERIES 19R
169847-03

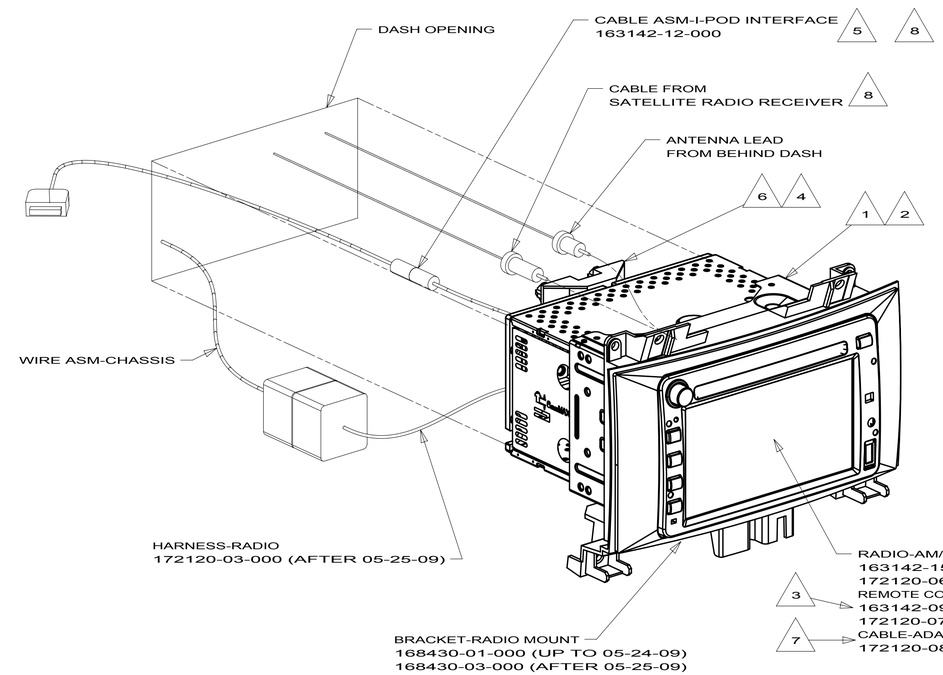

NOTES:

8. APPLY TAPE 008363-01-000 TO SECURE CONNECTION
7. CONNECT TO "CAMERA 1" CABLE ON RADIO FOR REAR CAMERA.
6. SUPPLIED WITH RADIO MOUNT BRACKET.
5. PLUG I-POD CABLE INTO LEAD ON BACK OF RADIO MARKED I-POD. DRILL 16 MM DIAMETER HOLE IN THE TRAY ABOVE THE RADIO. THE HOLE IS TO BE LOCATED ON THE PASSENGER SIDE OF THE TRAY 50 MM FROM THE END NEAREST THE WINDSHIELD. ROUTE I-POD CABLE INTO THE TRAY AND LEAVE 200 MM OF WIRE IN THE TRAY.
4. INSTALL REAR SUPPORT TO TOP EDGE OF RADIO.
3. TO BE SUPPLIED LOOSE IN WINNEBAGO OWNERS CASE.
2. BEND TABS ON ALL 4 SIDES TO SECURE MOUNTING BRACKET TO DASH OPENING.
1. SUPPLIED WITH RADIO.

19R RADIO/REARVIEW MONITOR SYS
70C RADIO - SATELLITE
19V RADIO-AM/FM STEREO CD PLAYER
265 CODES/STANDARDS-CSA/CMVSS
1B1 CODES/STANDARDS USA

FOR ELECTRICAL TORQUE SPECIFICATIONS SEE DWG NO. 128783-01-000

X-X FOR ELECTRICAL CALLOUTS SEE DWG NO. 121339-01-000

1B1 265

FIRST USED 10 500,H-SERIES

DO NOT SCALE DRAWING

TITLE: RADIO INSTL

SHEET 3 | PART NO 169847 | REV

6/16/2010