DWG NO	MODEL	ROLLER ASM	VIEW C-C	LENGTH	A
169129-01	329B	161748-11-CHT	NO	18'	61
169129-02	331C	161748-08-CHT	YES	15'	61
169129-03	NOT USED	161748-04-CHT	NO	11.5'	131

RELEASE	REV A	DATE	DWG NO 169129
REV	ZONE	REVISION RECORD	DATE	DFTR-ORIG

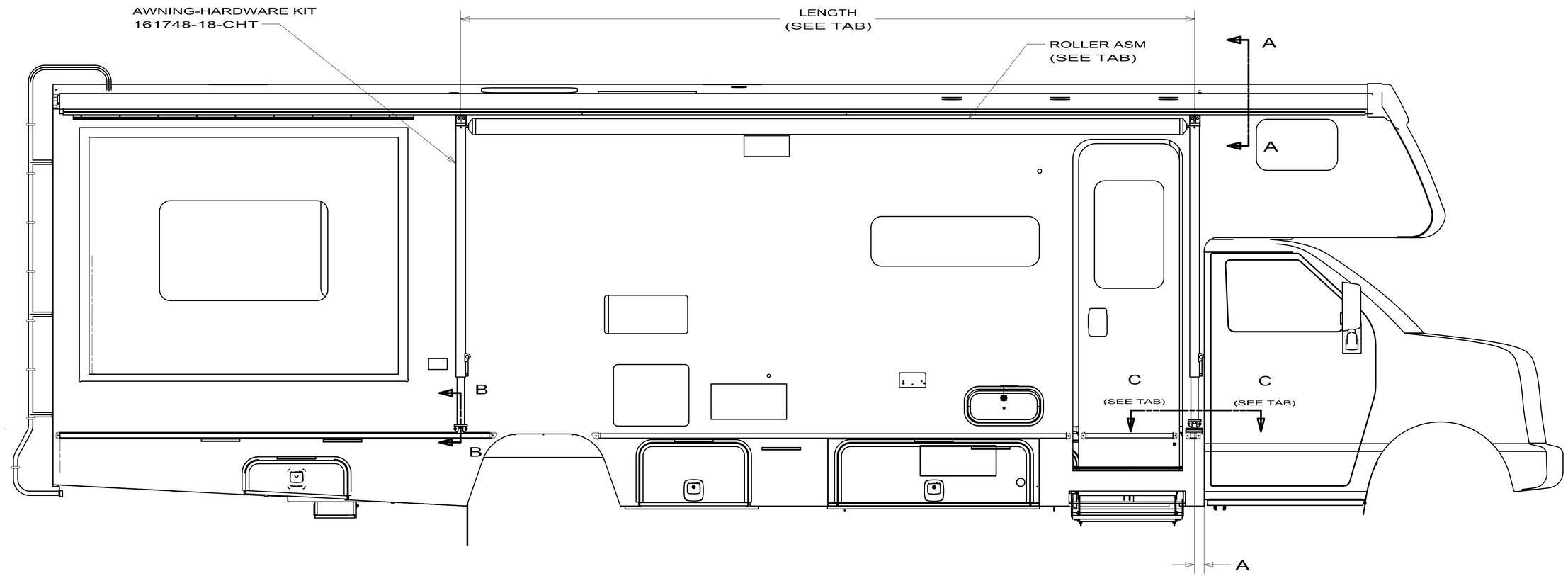

DOMETIC A&E
AWNINGS

2. USE IN PLACE OF KIT SUPPLIED BOLT.

1. LOCATE 40 mm ABOVE FEATURE STRIP.

NOTES:

WINNEBAGO INDUSTRIES

COPYRIGHT 2009
WINNEBAGO
INDUSTRIES, INC.

DFTR	ORIG. DATE
CHKR	ALL DIMENSIONS ARE IN MILLIMETERS
P.E.	
M.E.	FIRST USED
DSNR	10 300 SERIES

UNSPECIFIED TOLERANCES ARE:

WHOLE DIM (X)	:	3
ONE-PLACE (X.X)	:	1.5
TWO-PLACE (X.XX)	:	0.50
ANGLE	:	1°

MATERIAL:

THIRD ANGLE PROJECTION

DO NOT SCALE DRAWING

TITLE:
AWNING INSTL 300-SERIES

SHEET 1 OF 2 | PART NO 169129 | REV

REF:

DWG NO 169129

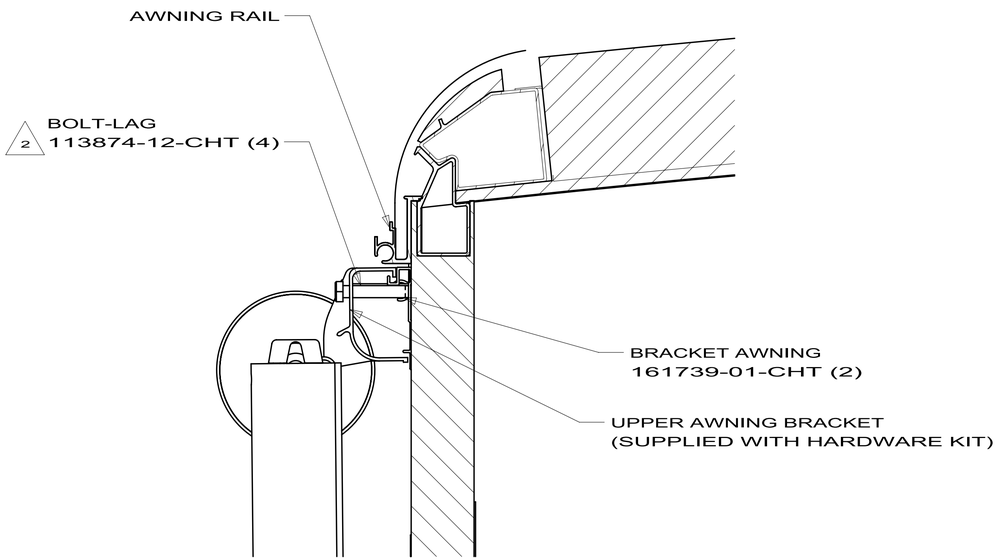

SECTION A-A

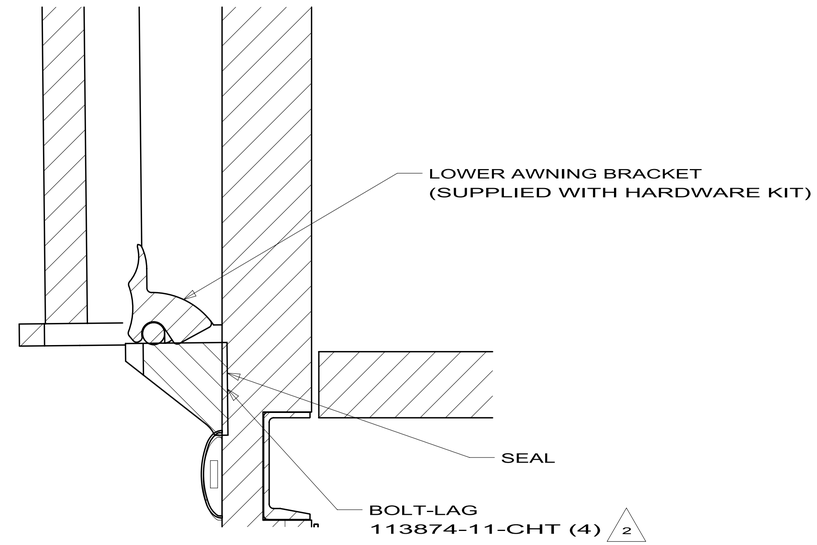

SECTION B-B

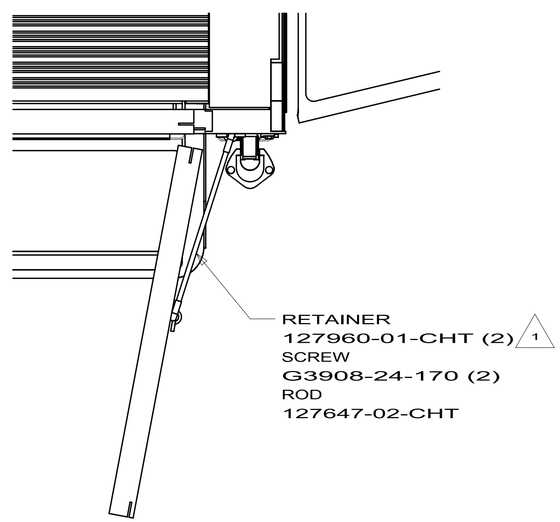

VIEW C-C
DOOR SHOWN IN OPEN POSITION

FIRST USED	10 300 SERIES
	DO NOT SCALE DRAWING
TITLE:	AWNING INSTL 300-SERIES
SHEET 2	PART NO 169129 REV

RELEASE	REV A	DATE	DWG NO 169134

REV	ZONE	REVISION RECORD	DATE	DFTR-ORIG

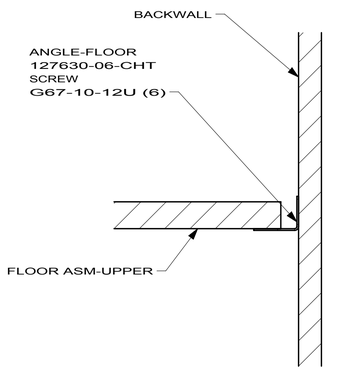

SECTION AA-AA

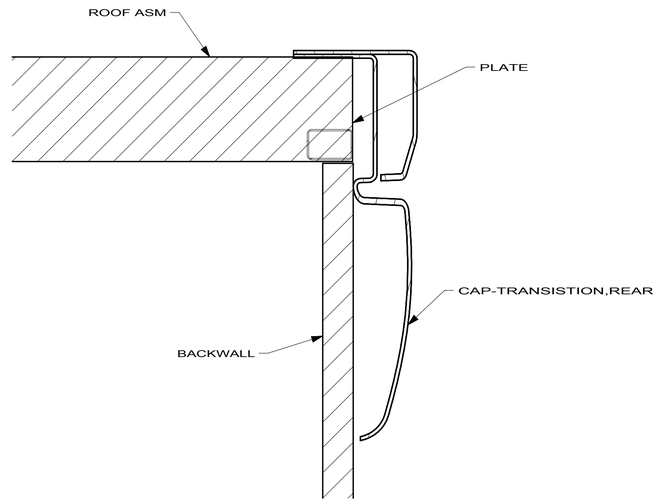

SECTION AB-AB

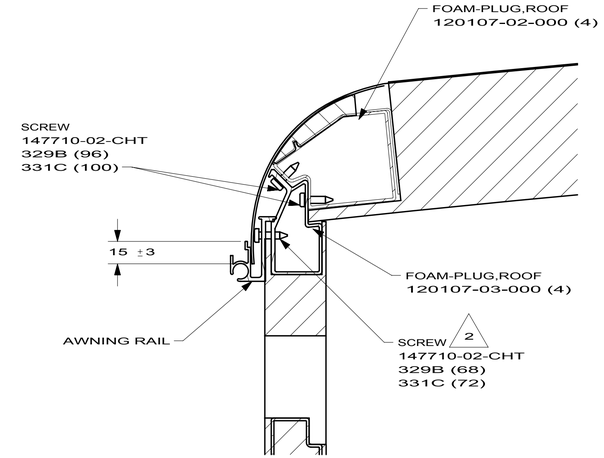

SECTION AC-AC

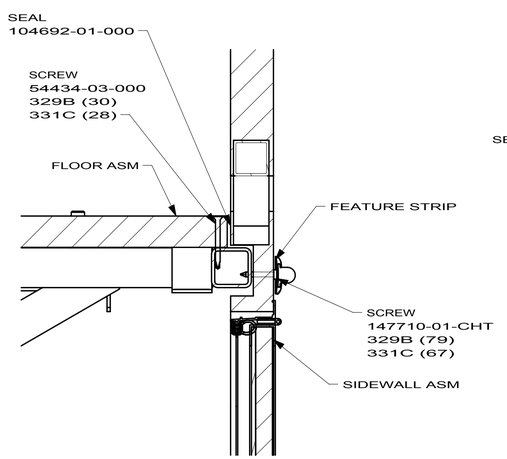

SECTION AD-AD

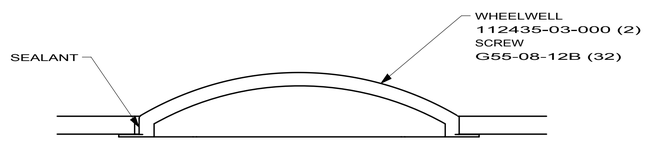

DETAIL AE

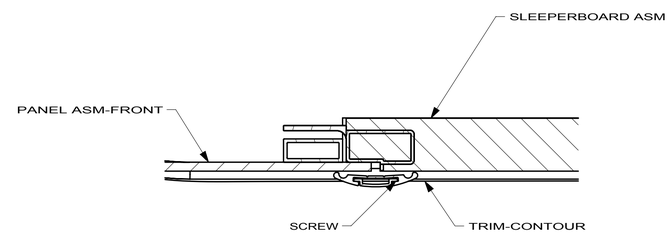

SECTION AG-AG

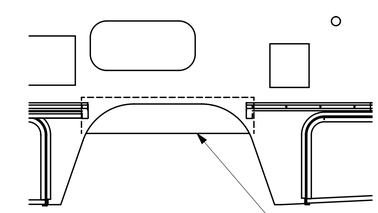

DETAIL AH

SIGHT SHIELD
121948-02-000
(CENTERED OVER AXLE,
SCREWED TO FLOOR FRAME)
SCREW
86256-01-000 (6)

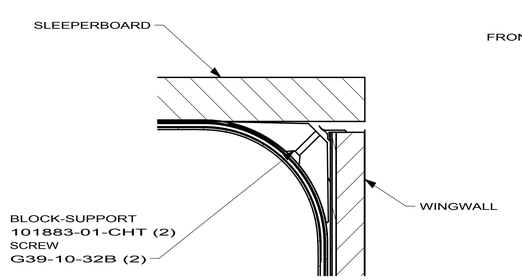

SECTION AF-AF

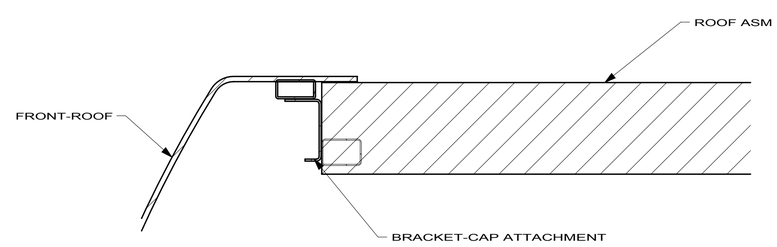

SECTION AL-AL

09L SLIDEOUT ROOM FRONT LEFT

4. NOT USED WITH 09L.

3. DIMENSIONS ARE FROM THE DOOR CUTOUT TO THE UPPER HOLE CLOSEST TO THE DOOR

2. SCREW MUST BE LOCATED WITHIN 50MM OF RAIL-AWNING SPLICE. DRILL ADDITIONAL HOLES AND ADD SCREWS AS REQUIRED.

1. PLACE SEALANT AT THE END OF RAIN CHANNEL.

NOTES:

COPYRIGHT 2009
WINNEBAGO
INDUSTRIES, INC.

DFTR	ORIG. DATE
CHKR	ALL DIMENSIONS ARE IN MILLIMETERS
P.E.	
M.E.	FIRST USED
DSNR	10 300-SERIES

UNSPECIFIED TOLERANCES ARE:
WHOLE DIM (X) : 3
ONE-PLACE (X.X) :
TWO-PLACE (X.XX) :
ANGLE :

THIRD ANGLE PROJECTION

MATERIAL:

DO NOT SCALE DRAWING

TITLE:
BODY INSTL-SECTIONS

SHEET 1 OF 4 | PART NO 169134 | REV

REF:

DWG NO 169134

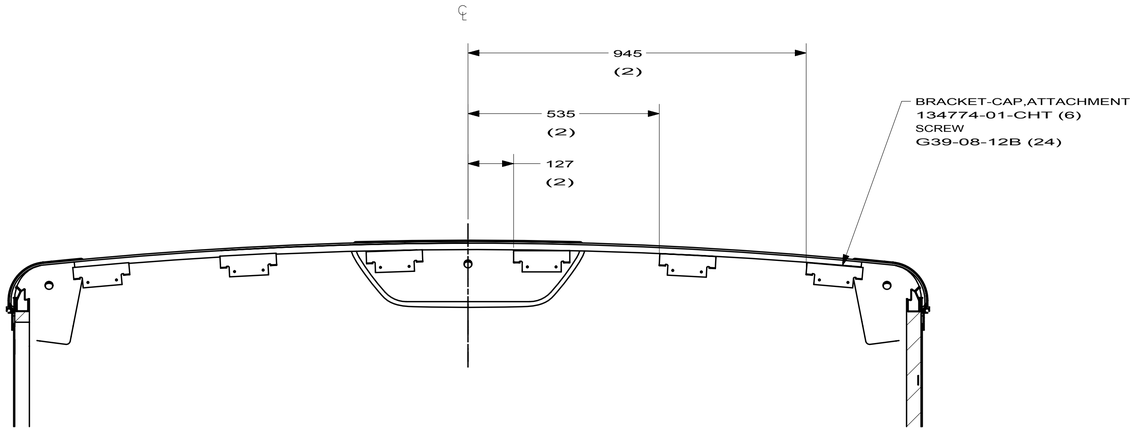

SECTION AN-AN

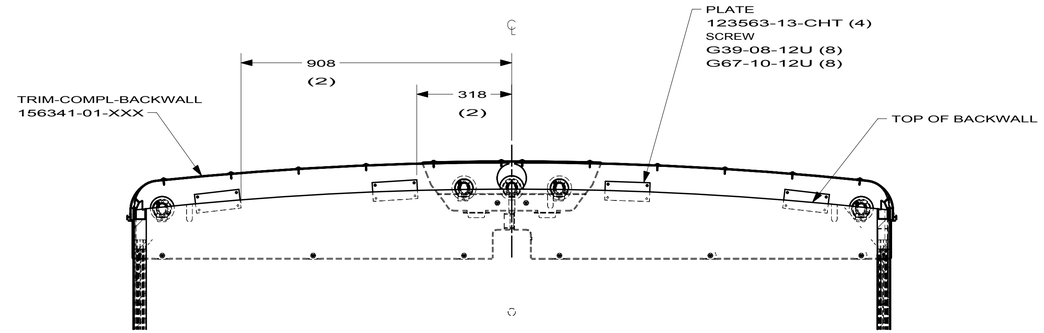

SECTION AM-AM

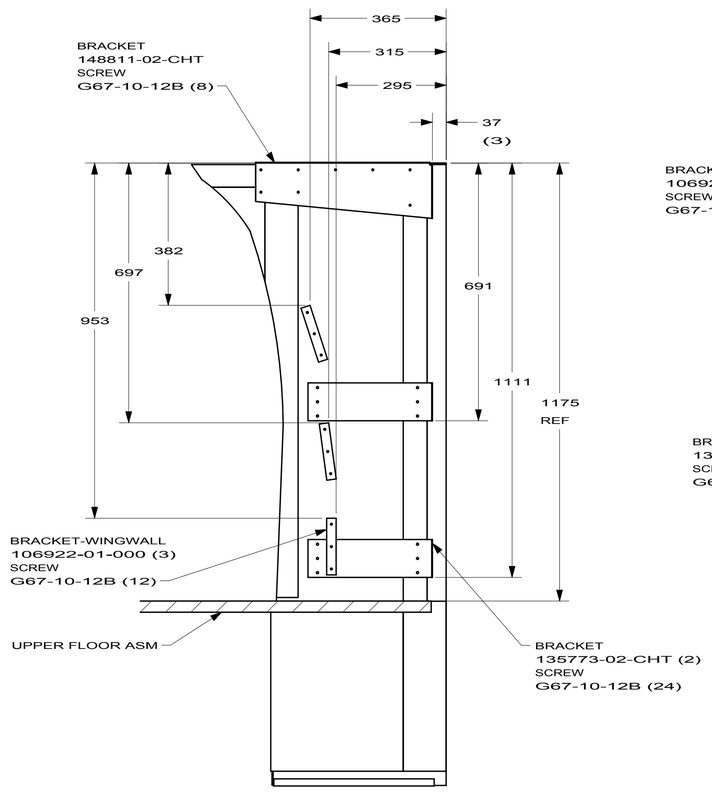

SECTION AJ-AJ

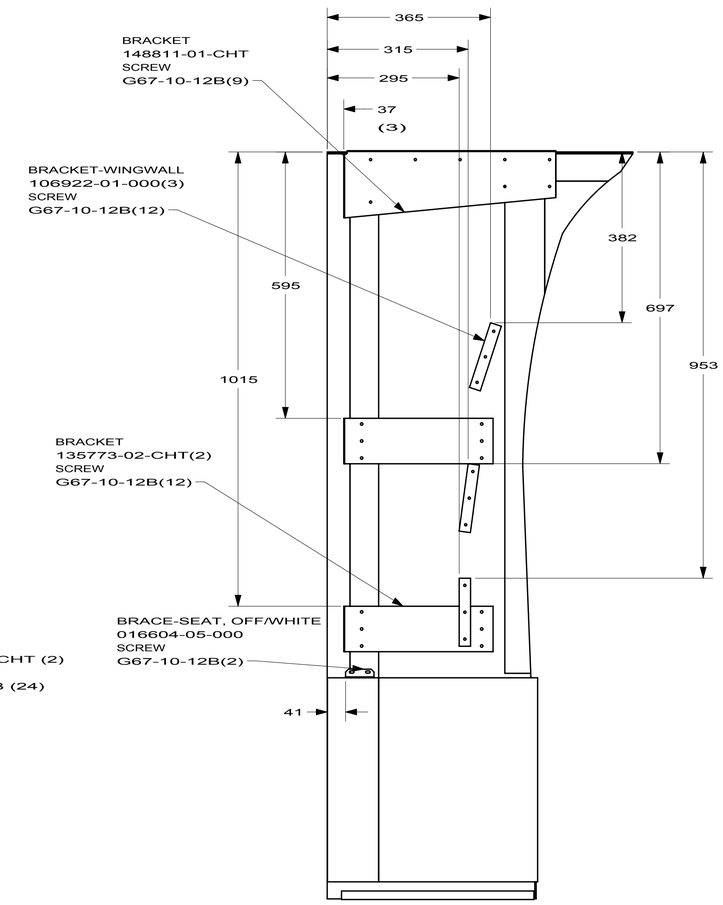

4

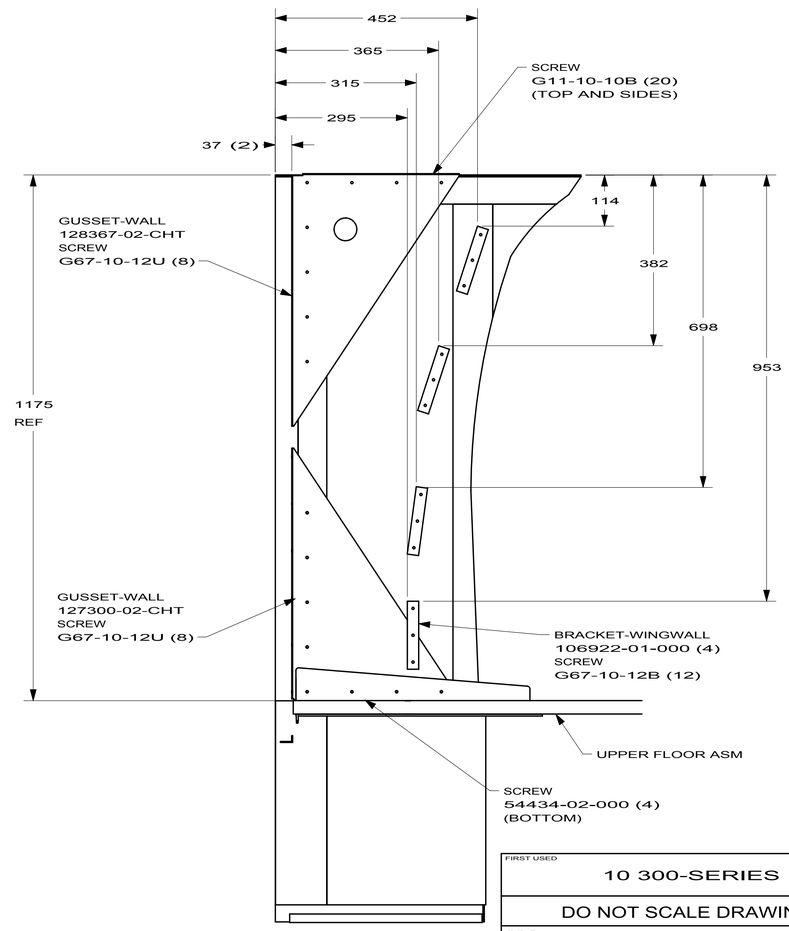

SECTION AK-AK

09L

FIRST USED	10 300-SERIES
	DO NOT SCALE DRAWING
TITLE:	BODY INSTL-SECTIONS
SHEET 2	PART NO 169134 REV

DWG NO 169134

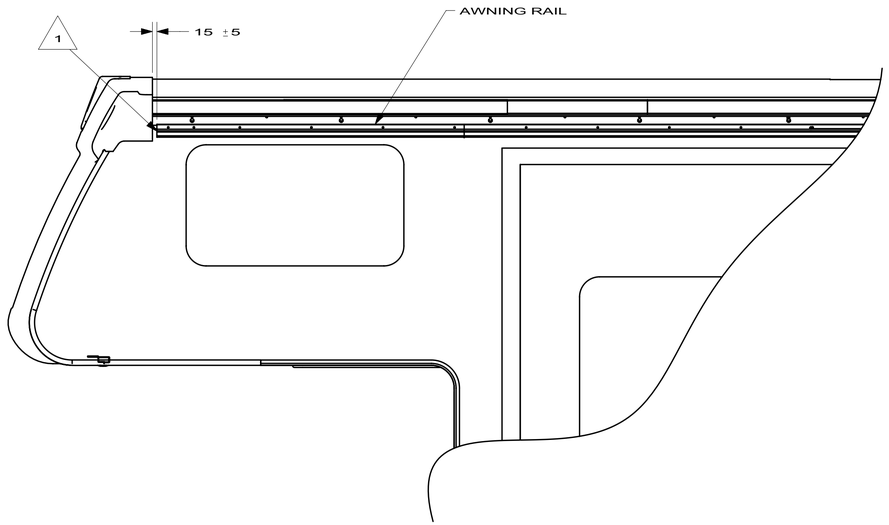

DETAIL AP

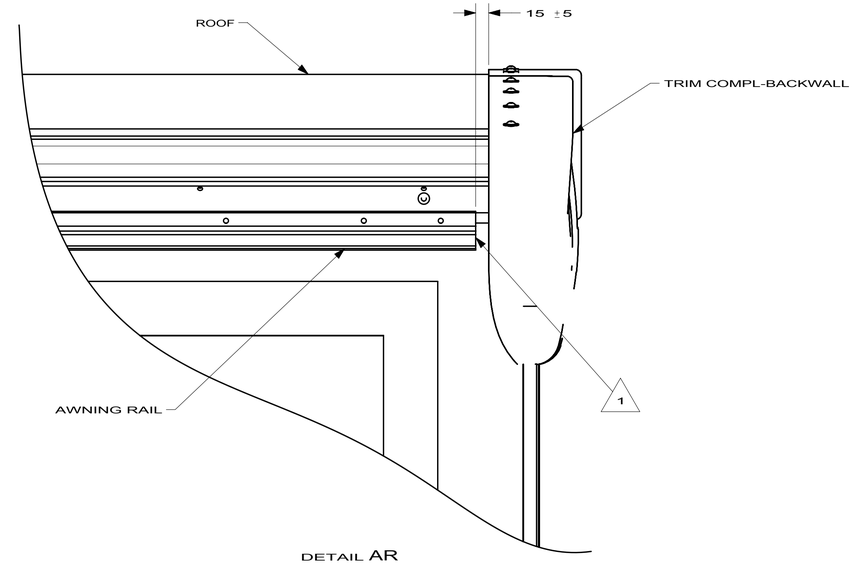

DETAIL AR

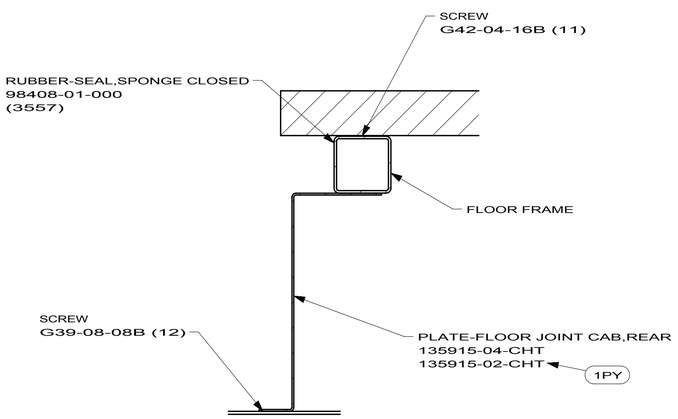

SECTION BB-BB

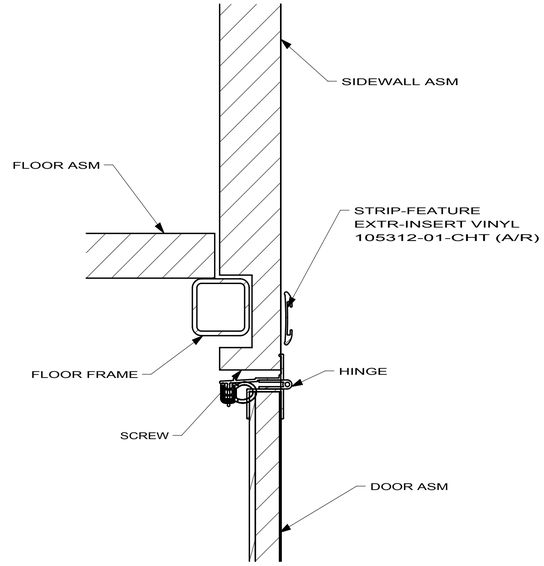

SECTION BA-BA

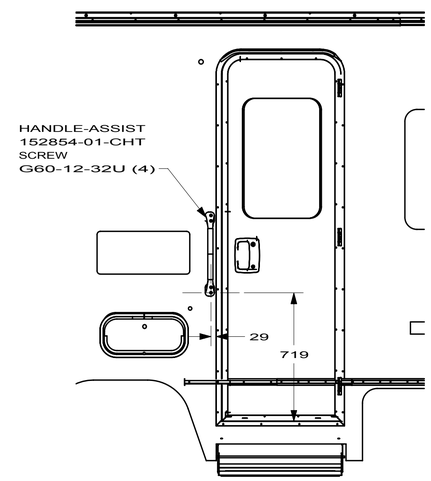

VIEW AS-AS

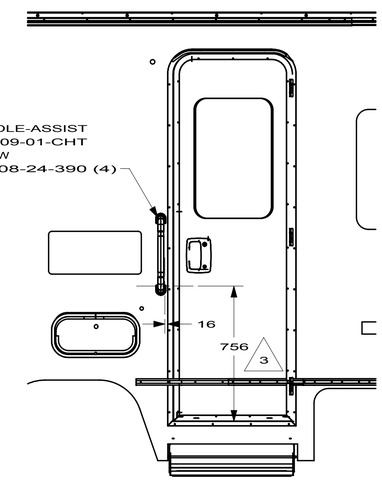

VIEW AS-AS

27A 24C 92A

1PY CHEVY CHASSIS 14,050 LB GVWR

24C EXT FULL BODY PAINT PKG # 3

92A EXT FULL BODY PAINT PKG # 2

27A EXT FULL BODY PAINT PKG #1

FIRST USED	10 300-SERIES
	DO NOT SCALE DRAWING
TITLE:	BODY INSTL-SECTIONS
SHEET 3	PART NO 169134 REV

DWG NO 169134

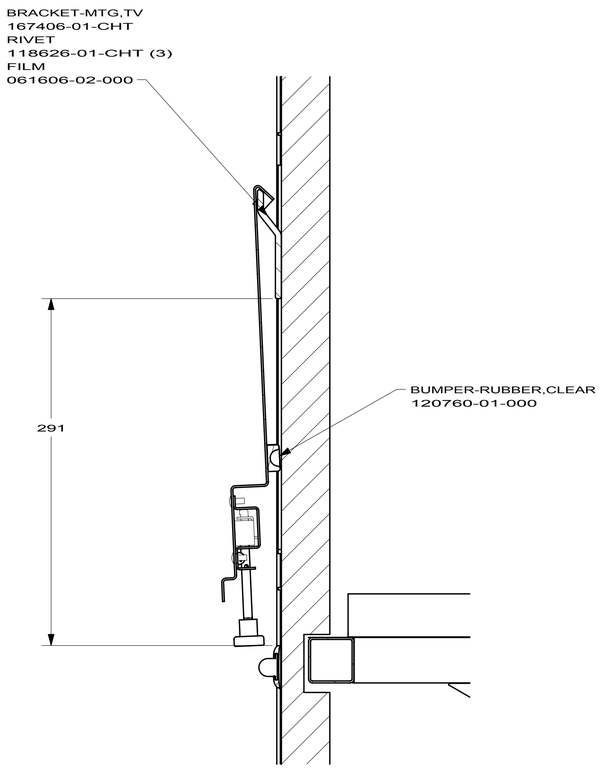

SECTION AV-AV (ILK)

(1LK) TV-19"DC,COLOR,LCD W/REMOTE

FIRST USED	10 300-SERIES
	DO NOT SCALE DRAWING
TITLE:	BODY INSTL-SECTIONS
SHEET 4	PART NO 169134 REV

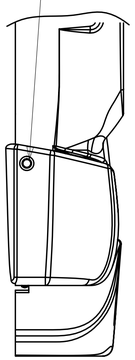

VIEW B-B
(BOTH SIDES)

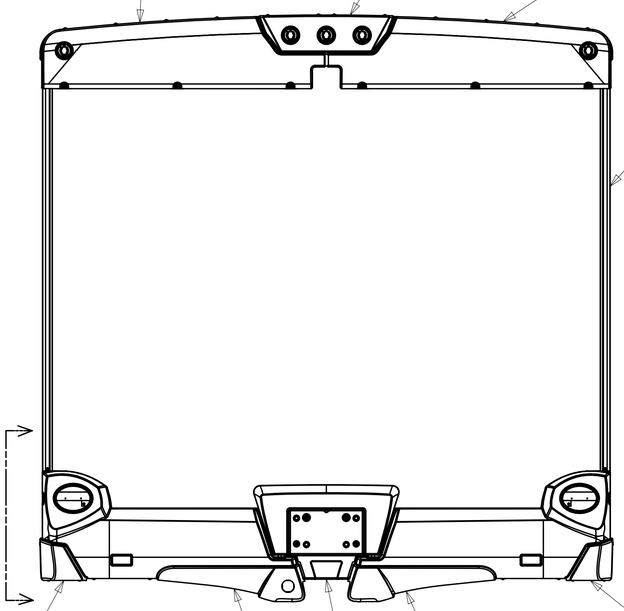

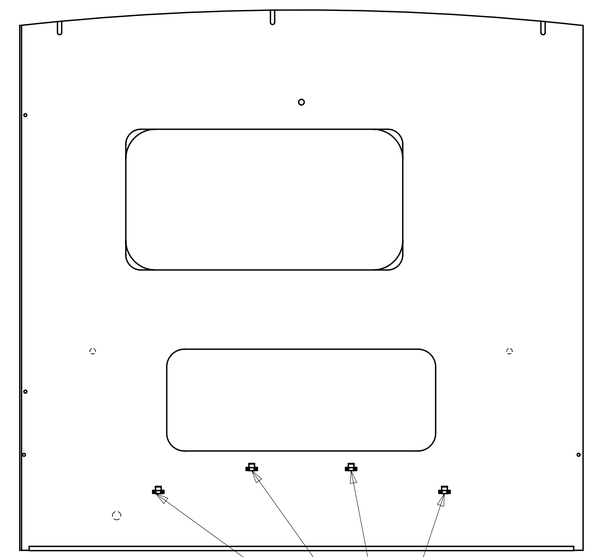

TRIM ASM-BACKWALL,UPPER,LEFT
156058-06-XXX
SCREW-SHOULD/WSHR HD
113563-01-CHT (8)
BRACKET-LAMP,CLEARANCE
138996-03-000

TRIM ASM-BACKWALL,UPPER,CENTER
156058-04-XXX
SCREW-SHOULD/WSHR HD
113563-01-CHT (4)
BRACKET-LAMP,CLEARANCE
138996-03-000 (3)

RETAINER-SCREW
118383-02-CHT
SCREW
000G39-08-12U
CAP-REATAINER
118383-04-CHT

TRIM ASM-BACKWALL,UPPER,RIGHT
156058-02-XXX
SCREW-SHOULD/WSHR HD
113563-01-CHT (8)
BRACKET-LAMP,CLEARANCE
138996-03-000

TRIM-CONTOUR
166487-01-CHT (2) 2
SCREW
000G39-10-16U (24)
EXTR-VINYL,INSERT
105312-01-CHT (REF LENGTH 3500)
SCREW-SF/DR-8-18X.75 PWH
000G55-08-12U (4) 3

TRIM-BKWALL,LWR,CAP,LH
156059-07-CHT
SCREW-PAN,HEAD
000G39-08-12U (2) 1

TRIM-BKWALL,LWR,CAP,LH
156059-08-CHT
SCREW-PAN,HEAD
000G39-08-12U (2) 1

TRIM ASM-BKWALL,LWR,RH
156059-02-XXX
SCREW-PAN,HEAD
000G39-08-12U (2)
SCREW-SHOULD/WSHR HD 1
113563-01-CHT (4)
BRACKET ASM-TAIL LIGHT,RH
156312-01-02B
BRACKET-BUMPER,RH
156314-01-02B

TRIM ASM-BKWALL,LWR,LH
156059-06-XXX
SCREW-PAN,HEAD
000G39-08-12U (2)
SCREW-SHOULD/WSHR HD 1
113563-01-CHT (4)
BRACKET ASM-TAIL LIGHT,LH
156312-02-02B
BRACKET-BUMPER,LH
156314-02-02B

TRIM ASM-BKWALL,LWR,CTR
156059-04-XXX
LIGHT-DUMP VALVE
087201-01-000
SCREW-SF/DR-8-18X.75 PWH 1
000G55-08-12U (2)

MOUNTING CLIP-VAL PANEL
073050-04-000 (4)
SCREW-SF/DR-10-16X1/2 TPH
000G39-10-129 (8)

4. PLASTIC TRIM TO BACKWALL GAP: 6.0 MM NOMINAL. TOLERANCE +4/-2 WITH NO MORE THAN 3.0 MM VARIANCE WITHIN A SINGLE PART.

3 POSITIONED TO HOLD EACH END OF VINYL INSERT.

2 TRIM TO LENGTH ON INSTALL.

1 CLEAN AND APPLY ADHESIVE PROMOTER 087211-01-000 TO BOND SURFACE AND APPLY DIRECT PRESSURE.

NOTES:

07 300 SERIES

SEE CHART
FOR COLOR VARIATIONS OF THIS PART

TRIM COMPL-BACKWALL,W/BUMPER
1 1 156341

4/1/2010

DWG NO	SHEET	
167494-01	1	16B 16C 16Y 28N
167494-02	2	16B 16C 16Y 28X
167494	NA	1PY 28N
167494	NA	1PY 28X

RELEASE	REV A	DATE	DWG NO 167494
REV	ZONE	REVISION RECORD	DATE	DFTR-ORIG

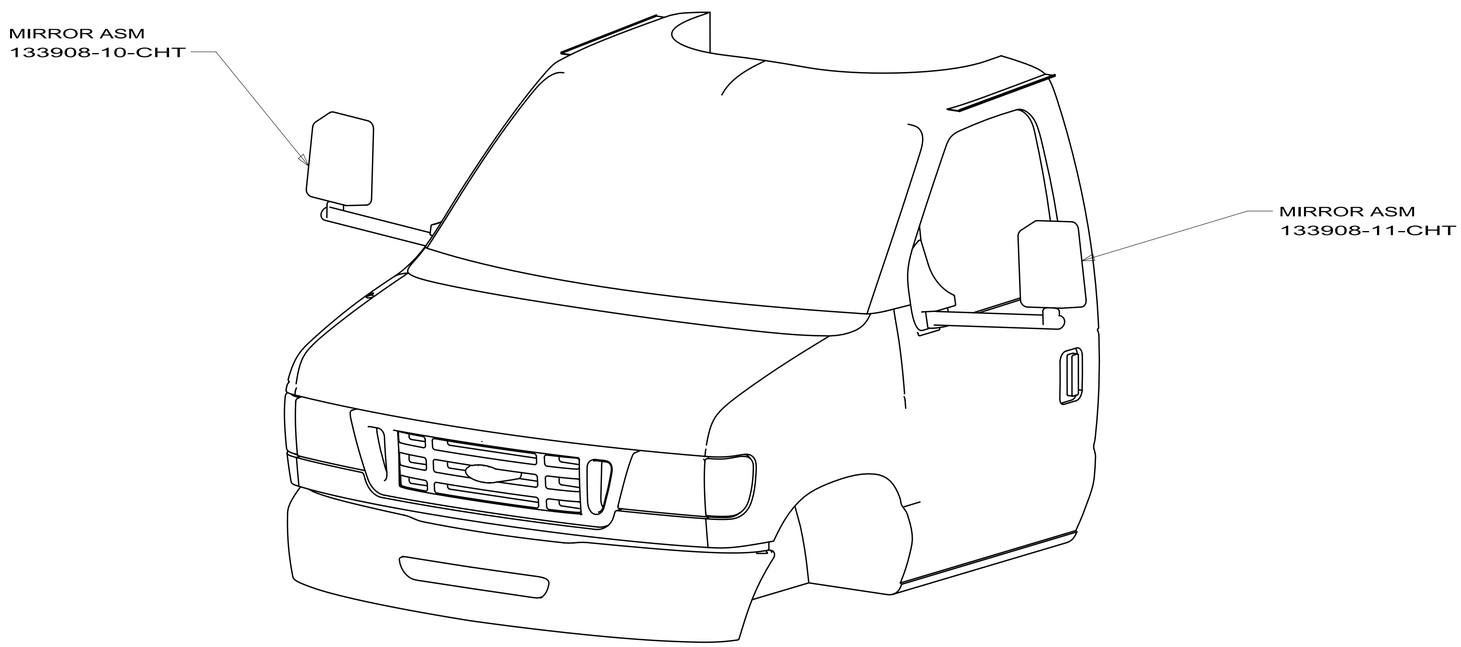

28X MIRRORS-EXTERIOR W/DEFROST
28N MIRRORS-EXTERIOR
1PY CHEVY CHASSIS 14,050 LB GVWR
16Y FORD CHASSIS - 14,500#_GVWR
16C FORD CHASSIS-11,500# GVWR
16B FORD CHASSIS 10,700 LB.GVWR

FORD

28N
16E
16C
16B

WINNEBAGO INDUSTRIES

COPYRIGHT 2009
WINNEBAGO
INDUSTRIES, INC.

DFTR	ORIG. DATE
CHKR	ALL DIMENSIONS ARE IN MILLIMETERS
P.E.	
M.E.	FIRST USED
DSNR	09 C-BODY

UNSPECIFIED TOLERANCES ARE:
WHOLE DIM (X) : 3
ONE-PLACE (X.X) : 1.5
TWO-PLACE (X.XX) : 0.50
ANGLE : 1°

MATERIAL:

THIRD ANGLE PROJECTION

DO NOT SCALE DRAWING

TITLE:
MIRROR INSTL-EXTERIOR

SHEET 1 OF 2 | PART NO 167494 | REV

REF:

DWG NO 167494

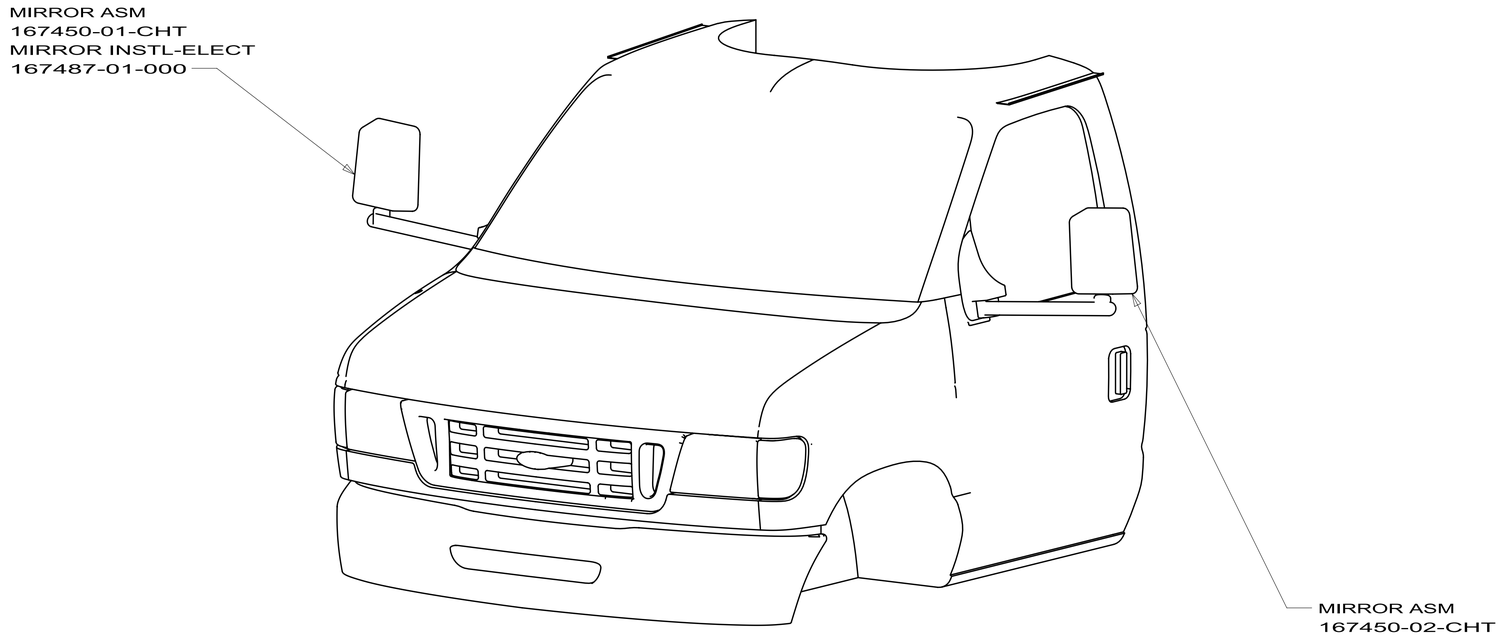

FORD

16Y
16C
16B
28X

FIRST USED	09 C-BODY
	DO NOT SCALE DRAWING
TITLE:	MIRROR INSTL-EXTERIOR
SHEET 2	PART NO 167494 REV

KEY	PART NUMBER	U/M	DESCRIPTION	VENDOR NO.
	117051-01-700	EA	MIRROR-CONVEX	723068-4
	120269-01-700	EA	GLASS KIT W/BEZEL RH/LH	709407-8
	133908-03-700	EA	CAP - RECT/BLACK-W/O LIGHT	709577
	133908-04-700	EA	CAP-MIRROR/ROUND - W/O LIGHT	7095470

COPYRIGHT © 2009 WINNEBAGO INDUSTRIES INC.

167450-01-02A

KEY	PART NUMBER	U/M	DESCRIPTION	VENDOR NO.
	167450-01-702	EA	MIRROR HEAD - RIGHT - CHROME	715998
	167450-01-706	EA	FLAT GLASS KIT-HEATED/RIGHT	716104
	167450-01-707	EA	CONVEX GLASS KIT - RIGHT	716106
	167450-01-710	EA	MOTOR - W/WIRE HARNESS	747832
	167450-01-711	EA	GASKETS(2)-BASE MOUNT-FORD	709743
	167450-01-715	EA	ARM CVR KIT-102" RH & LH-BLK	716113

167450-01-03A

KEY	PART NUMBER	U/M	DESCRIPTION	VENDOR NO.
	167450-01-704	EA	MIRROR HEAD - RIGHT - BLACK	715990
	167450-01-706	EA	FLAT GLASS KIT-HEATED/RIGHT	716104
	167450-01-707	EA	CONVEX GLASS KIT - RIGHT	716106
	167450-01-710	EA	MOTOR - W/WIRE HARNESS	747832
	167450-01-711	EA	GASKETS(2)-BASE MOUNT-FORD	709743
	167450-01-715	EA	ARM CVR KIT-102" RH & LH-BLK	716113

167450-02-02A

KEY	PART NUMBER	U/M	DESCRIPTION	VENDOR NO.
	167450-01-703	EA	MIRROR HEAD - LEFT - CHROME	715997
	167450-01-708	EA	FLAT GLASS KIT - HEATED/LEFT	716103
	167450-01-709	EA	CONVEX GLASS KIT - LEFT	716105
	167450-01-710	EA	MOTOR - W/WIRE HARNESS	747832
	167450-01-711	EA	GASKETS(2)-BASE MOUNT-FORD	709743
	167450-01-715	EA	ARM CVR KIT-102" RH & LH-BLK	716113

167450-02-03A

KEY	PART NUMBER	U/M	DESCRIPTION	VENDOR NO.
	167450-01-705	EA	MIRROR HEAD - LEFT - BLACK	715989
	167450-01-708	EA	FLAT GLASS KIT - HEATED/LEFT	716103
	167450-01-709	EA	CONVEX GLASS KIT - LEFT	716105
	167450-01-710	EA	MOTOR - W/WIRE HARNESS	747832
	167450-01-711	EA	GASKETS(2)-BASE MOUNT-FORD	709743
	167450-01-715	EA	ARM CVR KIT-102" RH & LH-BLK	716113

167450-05-02A

KEY	PART NUMBER	U/M	DESCRIPTION	VENDOR NO.
	167450-01-702	EA	MIRROR HEAD - RIGHT - CHROME	715998
	167450-01-706	EA	FLAT GLASS KIT-HEATED/RIGHT	716104
	167450-01-707	EA	CONVEX GLASS KIT - RIGHT	716106
	167450-01-710	EA	MOTOR - W/WIRE HARNESS	747832
	167450-01-711	EA	GASKETS(2)-BASE MOUNT-FORD	709743
	167450-01-713	EA	ARM CVR KIT-96" RH & LH-BLK	716107

167450-05-03A

KEY	PART NUMBER	U/M	DESCRIPTION	VENDOR NO.
	167450-01-704	EA	MIRROR HEAD - RIGHT - BLACK	715990
	167450-01-706	EA	FLAT GLASS KIT-HEATED/RIGHT	716104
	167450-01-707	EA	CONVEX GLASS KIT - RIGHT	716106
	167450-01-710	EA	MOTOR - W/WIRE HARNESS	747832
	167450-01-711	EA	GASKETS(2)-BASE MOUNT-FORD	709743
	167450-01-713	EA	ARM CVR KIT-96" RH & LH-BLK	716107

COPYRIGHT © 2009 WINNEBAGO INDUSTRIES INC.

DRAWING NO.	SWITCH PLATE	CHASSIS
167487-01	167450-07	FORD
167487-02	167450-09	N/A

RELEASE	REV A	DATE	DWG NO 167487
REV	ZONE	REVISION RECORD	DATE	DFTR-ORIG

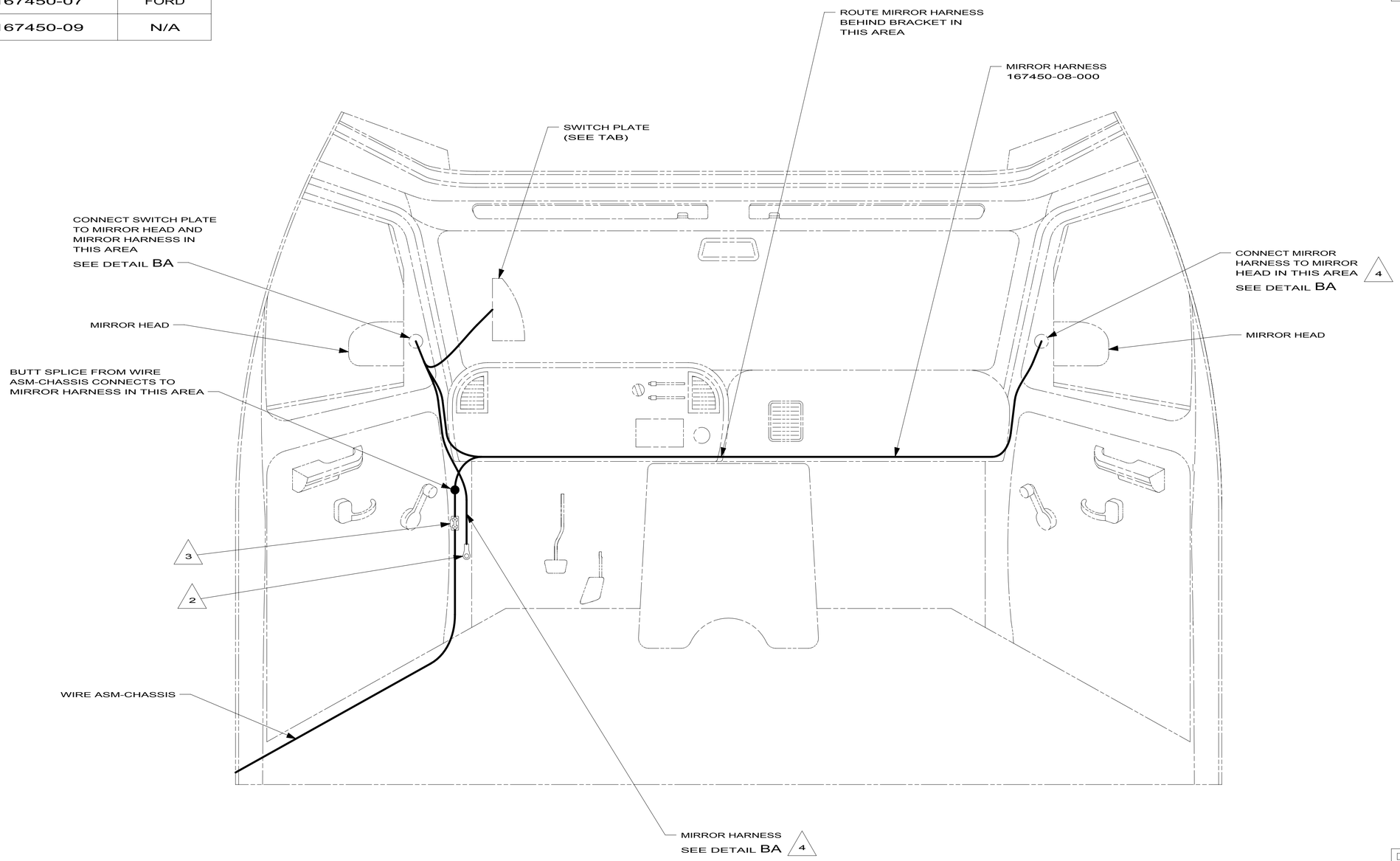

NOTES:

4 ROUTE THROUGH EXISTING BOOT.

3 WIRE TIE THE FUSE HOLDER FROM THE WIRE ASM-CHASSIS NEAR THE FUSE PANEL.

2 INSTALL MIRROR GROUND EYELET UNDER FORD GROUND BOLT LOCATED BELOW PARK BRAKE RELEASE HANDLE.

1 WIRE ASM-REMOTE MIRRORS,GND TO BE FED THROUGH DOOR AND ROUTED DOWN.

FOR ELECTRICAL TORQUE SPECIFICATIONS SEE DWG NO. 128783-01-000

X-X FOR ELECTRICAL CALLOUTS SEE DWG NO. 121339-01-000

COPYRIGHT 2009 WINNEBAGO INDUSTRIES, INC.

DFTR	ORIG. DATE
CHKR	ALL DIMENSIONS ARE IN MILLIMETERS
P.E.	
M.E.	FIRST USED
DSNR	09 C-BODIES

UNSPECIFIED TOLERANCES ARE:

WHOLE DIM (X)	±	3
ONE-PLACE (X.X)	±	1.5
TWO-PLACE (X.XX)	±	0.50
ANGLE	±	1°

MATERIAL:

THIRD ANGLE PROJECTION

DO NOT SCALE DRAWING

TITLE: MIRROR INSTL-ELECTRIC

SHEET 1 OF 2 | PART NO 167487 | REV

REF: 1

RELEASE	REV A	DATE	DWG NO 157216
REV	ZONE	REVISION RECORD	DATE	DFTR-ORIG

TRIM ASM-FRONT CAP/SDW,CTR
156849-04-XXX
SCREW
G39-08-08U (2)
G55-08-12U (3)
BRACKET-LAMP,CLEARANCE
138996-03-000 (3)

TRIM ASM-FRONT CAP/SDW,RH
156849-02-XXX
3 SCREW
G39-08-08U
BRACKET-LAMP,CLEARANCE
138996-03-000

TRIM ASM-FRONT CAP/SDW,LH
156849-06-XXX
SCREW
G39-08-08U
BRACKET-LAMP,CLEARANCE
138996-03-000 (3)
3

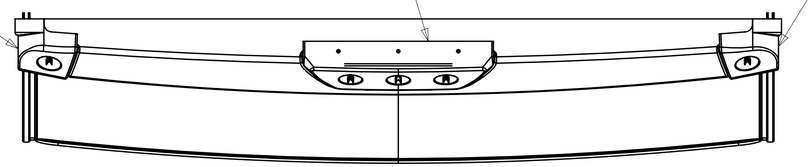

TRIM-CONTOUR
166489-01-CHT
SCREW
G39-10-16U (9)
EXTR-VINYL,INSERT
105312-01-CHT
(REF LENGTH 3850)

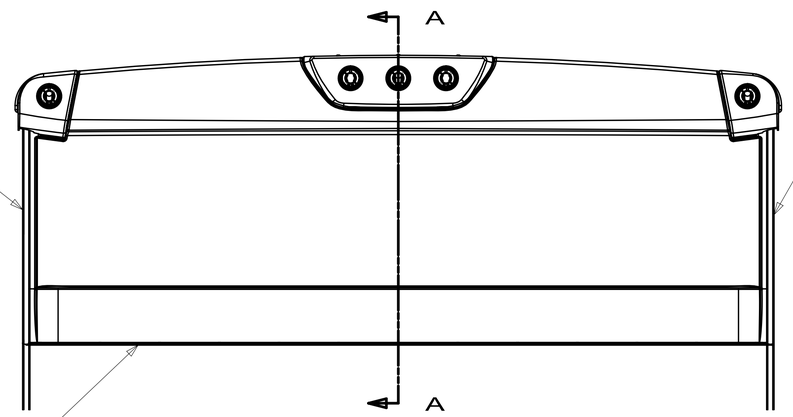

TRIM-CONTOUR
166489-02-CHT
SCREW
G39-10-16U (9)
EXTR-VINYL,INSERT
105312-01-CHT
(REF LENGTH 3850)

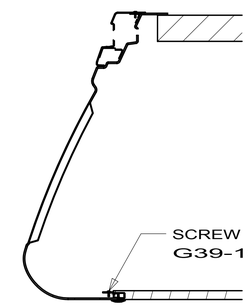

SCREW
G39-10-10U (17)

SECTION A-A

PANEL ASM-FRONT
157215-01-XXX
INSULATION-AIR POCKET W/FOIL
105290-01-000

TRIM-CONTOUR
158152-01-CHT
SCREW
G39-10-16U (13)
EXTR-VINYL,INSERT
158107-01-CHT
(REF LENGTH 2500) 2

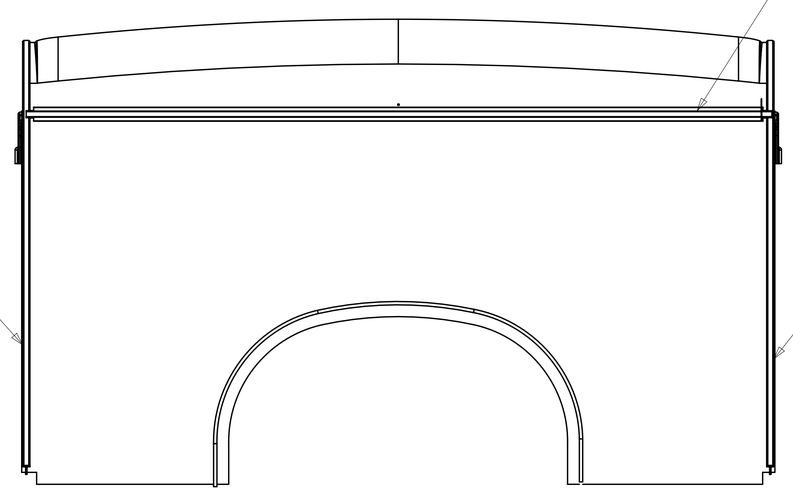

TRIM-CONTOUR
166486-01-CHT
SCREW
G39-10-16U (13)

TRIM-CONTOUR
166486-02-CHT
SCREW
G39-10-16U (13)

3 CLEAN FIBERGLASS WITH ISOPROPYL ALCOHOL AND APPLY ADHESIVE PROMOTER 900860-04-000.

2 SECURE VINYL ENDS UNDER SIDE EXTRUSIONS.

1. ALL SEALANTS MUST BE APPLIED PER SPECIFICATIONS IN THE MANUFACTURING SEALANT MANUAL.

NOTES:

COPYRIGHT 2009
WINNEBAGO
INDUSTRIES, INC.

DFTR	ORIG. DATE
CHKR	ALL DIMENSIONS ARE IN MILLIMETERS
P.E.	
M.E.	FIRST USED
DSNR	07 300-SERIES

UNSPECIFIED TOLERANCES ARE:
WHOLE DIM (X) : 3
ONE-PLACE (X.X) : 1.5
TWO-PLACE (X.XX) : 0.50
ANGLE : 1°

MATERIAL:

THIRD ANGLE PROJECTION

DO NOT SCALE DRAWING

TITLE:
BODY PANEL INSTL-FRONT

SHEET 1 OF 1 | PART NO 157216 | REV

REF:

DWG NO	UNIT	A	B	C	D	E	F
170786-01	331C	685	685	2160	3180	1270	250
170786-02	329B	1255	1230	3515	3380	1270	135
170786-03	330D	690	785	2145	3340	665	1845

RELEASE	REV A	DATE 08--07--08	DWG NO 170786
REV	ZONE	REVISION RECORD	DATE / DFTR.ORIG

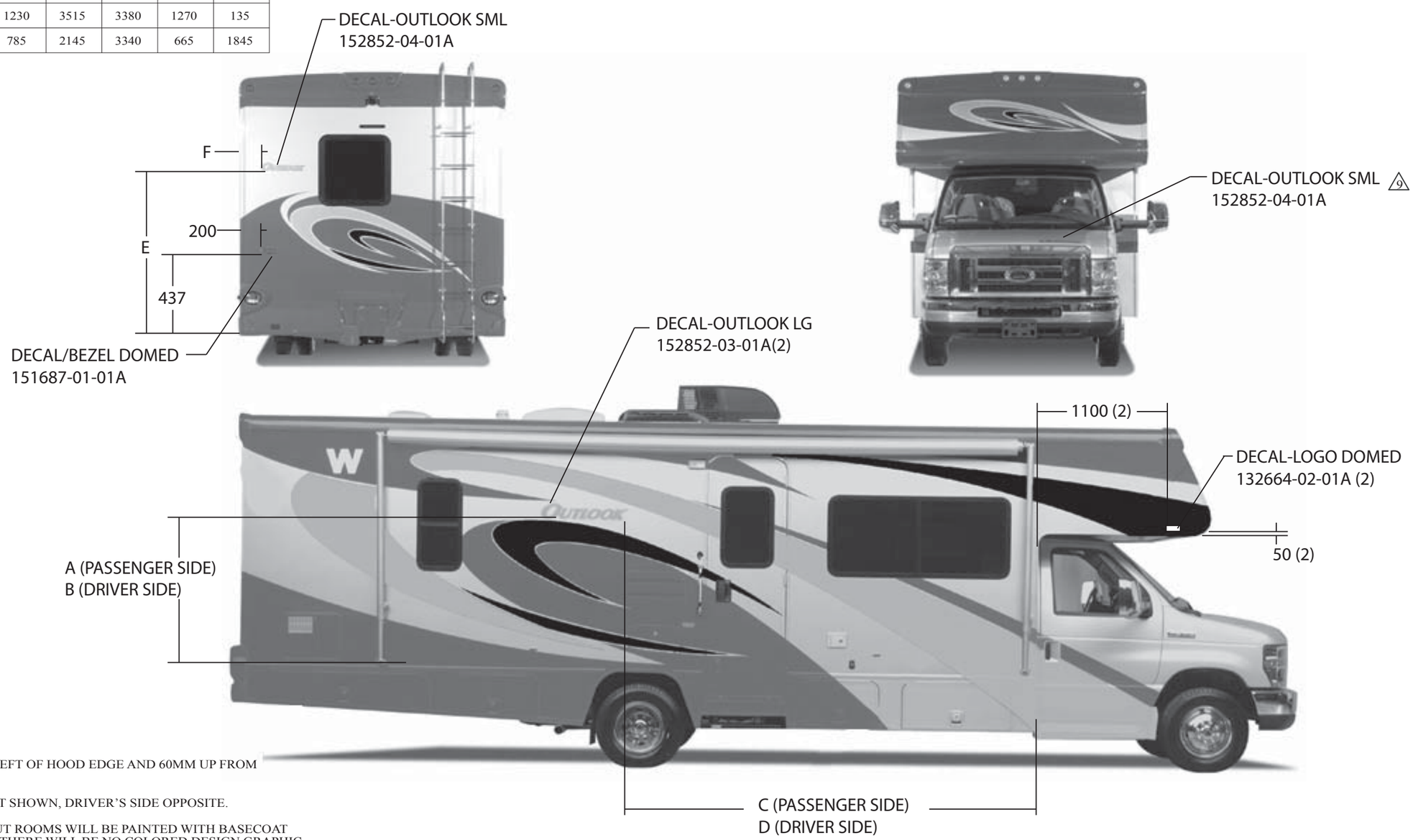

⚠9 LOCATE DECAL 240MM LEFT OF HOOD EDGE AND 60MM UP FROM FRONT EDGE OF HOOD.

8. PASSENGER SIDE OF UNIT SHOWN, DRIVER'S SIDE OPPOSITE.

7. END PANELS OF SLIDEOUT ROOMS WILL BE PAINTED WITH BASECOAT AND CLEAR COAT ONLY. THERE WILL BE NO COLORED DESIGN GRAPHIC ELEMENTS PAINTED ON THE END PANELS.

6. APPLY SEALER BODY SEAM CLEAR 94401-04-000 TO HELP SECURE EDGES.

5. USE 145487-02-000 (100 FT) TO COVER UNSEALED ROOF SEAMS.

4. CLEAR COAT TO BE APPLIED ON ENTIRE UNIT TO PROTECT PAINT.

3. TOLERANCE FOR DIMENSIONS IS +/-20mm.
LOGO IS TO BE +/- 1mm ON A HORIZONTAL PLANE (END TO END).

2. APPLY FILM-URETHANE PROTECTANT 109506-01-000 AT BOTTOM OF ENTRANCE DOOR TO PREVENT SCUFFMARKS.

1. APPLY PROTECTOR 116424-01-000 TO WATER HEATER DOOR LATCH.

NOTES:

(27A) 27A EXT FULL BODY PAINT PKG #1
(92A) 92A EXT FULL BODY PAINT PKG #2
(24C) 24C EXT FULL BODY PAINT PKG #3
(24B) 24C EXT FULL BODY PAINT PKG #4

WINNEBAGO INDUSTRIES

COPYRIGHT 2009
WINNEBAGO
INDUSTRIES, INC.

ORIG. DATE 08/04/08
FIRST USED
10 OUTLOOK
MATERIAL:

SPECIFICATION PRINT
DO NOT SCALE

TITLE: GRAPHICS INSTL - FBP

SHEET 1 OF 2 | PART NO 170786 | REV

REF 1 3/30/09

DWG NO 170786

LOGOS ARE CARRY OVER FROM 2009

(27A) GRAPHICS INST - 2010 OUTLOOK FBP
"STONE FENCE"

LOGOS ARE CARRY OVER FROM 2009

(92A) GRAPHICS INST - 2010 OUTLOOK FBP
"BLUE MOON"

LOGOS ARE CARRY OVER FROM 2009

(24C) GRAPHICS INST - 2010 OUTLOOK FBP
"CRIMSON"

LOGOS ARE CARRY OVER FROM 2009

(24B) GRAPHICS INST - 2010 OUTLOOK FBP
"BLACK FOREST"

FIRST USED	2010 OUTLOOK (300 SER)
	SPECIFICATION PRINT DO NOT SCALE
TITLE:	GRAPHICS INSTL - FBP
SHEET 2	PART NO 170786 REV

DWG NO	UNIT	SHEET
170443-01	331C	1,2
170443-02	329B	1,2
170443-03	NOT USED	

RELEASE	REV A	DATE	DWG NO 170443
REV	ZONE	REVISION RECORD	DATE	DFTR-ORIG

KEY	PART NUMBER (27G)	PART NUMBER (92K)	DESCRIPTION
1	120700-10-21A	120700-10-17A	DECAL-LOGO W
2	120702-03-66A	120702-03-52A	DECAL-LOGO WINNEBAGO SML
3	132664-02-01A		DECAL-LOGO DOMED WINNEBAGO
4	SW#77977/141599-A0-000 (1GF)	SW#78401/141599-98-000 (1GH)	PAINT
5	SW #75401/141599-98-000 (1GF)	SW #75392/141599-A1-000 (1GH)	PAINT
6	151687-01-01A		DECAL/BEZEL DOMED NAMEPLATE WINNEBAGO
7	152852-03-01A		DECAL-OUTLOOK LG
8	152852-04-01A		DECAL-OUTLOOK SML
9	165368-01-03A	165368-01-04A	DECAL-FRONT OVHD
10	165370-01-03A	165370-01-04A	DECAL-SWEEP #1 RH
11	165370-02-03A	165370-02-04A	DECAL-SWEEP #1 LH
12	165372-01-01A	165372-01-03A	DECAL-SWEEP #3 RH
13	165372-02-01A	165372-02-03A	DECAL-SWEEP #3 LH
14	165373-01-03A	165373-01-04A	DECAL-SWEEP #4 RH
15	165373-02-03A	165373-02-04A	DECAL-SWEEP #4 LH
16	165374-01-03A	165374-01-04A	DECAL-SWEEP #2 RH
17	165374-02-03A	165374-02-04A	DECAL-SWEEP #2 LH
18	165376-01-03A	165376-01-04A	DECAL-BACKWALL
19	165377-01-03A	165377-01-04A	FILM-MUTISTRIPE WINGWALL
20	160732-01-01A (1GF) (1GH)		DECAL-WINGWALL PAINT PROTECT RH
21	160732-02-01A (1GF) (1GH)		DECAL-WINGWALL PAINT PROTECT LH
22	170254-01-01A (1GF) (1GH)		PAINT MASK-LOWER BACKWALL
23	170255-01-01A (1GF) (1GH)		PAINT MASK-UPPER FRT SDWL RH
24	170255-02-01A (1GF) (1GH)		PAINT MASK-UPPER FRT SDWL LH
25	170256-01-01A (1GF) (1GH)		PAINT MASK LWR MID SDWL RH
26	170256-02-01A (1GF) (1GH)		PAINT MASK LWR MID SDWL LH
27	173398-01-01A (1GF) (1GH)		PAINT MASK-UPPER BACKWALL

1GH EXT PAINT #2 W/FBGLS BOARDS
1GF EXT PAINT #1 W/FBGLS BOARDS
92K EXTERIOR GRAPHICS PACKAGE #2
27G EXTERIOR GRAPHICS PACKAGE #1

NOTES:

10. CENTER ON UNIT.

9. LOCATE DECAL 240mm LEFT OF HOOD EDGE AND 60mm UP FROM FRONT EDGE OF HOOD.

8. ALIGN WINGWALL FILM WITH CAB & SIDEWALL DECALS.

7. VINYL DECAL WILL BE APPLIED WHERE EVER GRAPHIC DESIGN PATTERN IS POSITIONED OVER SLIDEROOM EXTRUSION, BUT WILL NOT BE APPLIED TO VINYL SCREW COVER INSERTS.

6. PAINT AREA IS TO BE BELOW FEATURE STRIP FOR OPTIONAL PAINTED MODELS AND CONTINUES ON CAB DOORS TO WHEEL WELL, INCLUDING RUNNING BOARD.

5. NO VINYL OR PAINT ON SLIDEOUT ROOM END PANELS.

4. ALL LOGOS ARE TO BE +/- 1mm ON A HORIZONTAL PLANE (END TO END).

3. CLEAR COAT 141599-27-000 TO BE APPLIED ON ALL PAINTED AREAS.

2. APPLY FILM-URETHANE PROTECTANT 109506-01-000 AT BOTTOM OF ENTRANCE DOOR TO PREVENT SCUFFMARKS.

1. APPLY PROTECTOR 116424-01-000 TO WATER HEATER DOOR LATCH.

WINNEBAGO INDUSTRIES

COPYRIGHT 2009
WINNEBAGO
INDUSTRIES, INC.

DFTR	ORIG. DATE
CHKR	ALL DIMENSIONS ARE IN MILLIMETERS
P.E.	
M.E.	FIRST USED 10 300 (OUTLOOOK)
DSNR	

UNSPECIFIED TOLERANCES ARE:
WHOLE DIM (X) : 3
ONE-PLACE (X.X) : 1.5
TWO-PLACE (X.XX) : 0.50
ANGLE : 1°

MATERIAL:

THIRD ANGLE PROJECTION

DO NOT SCALE DRAWING

TITLE: GRAPHICS INSTALLATION

SHEET 1 OF 2 | PART NO 170443 | REV

REF:

DWG NO 170443

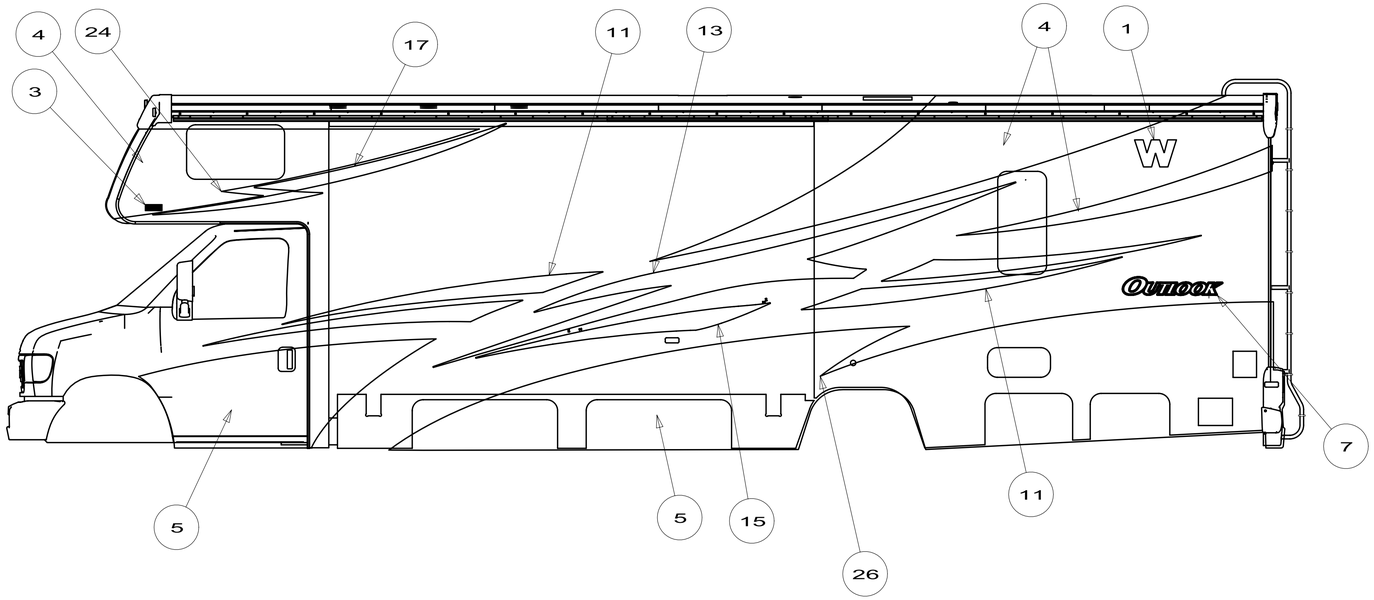

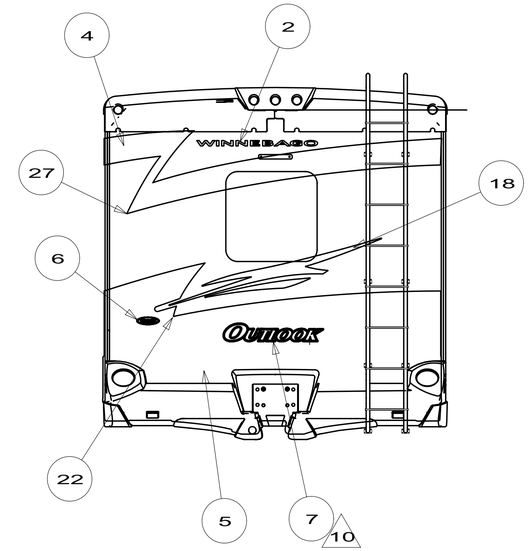

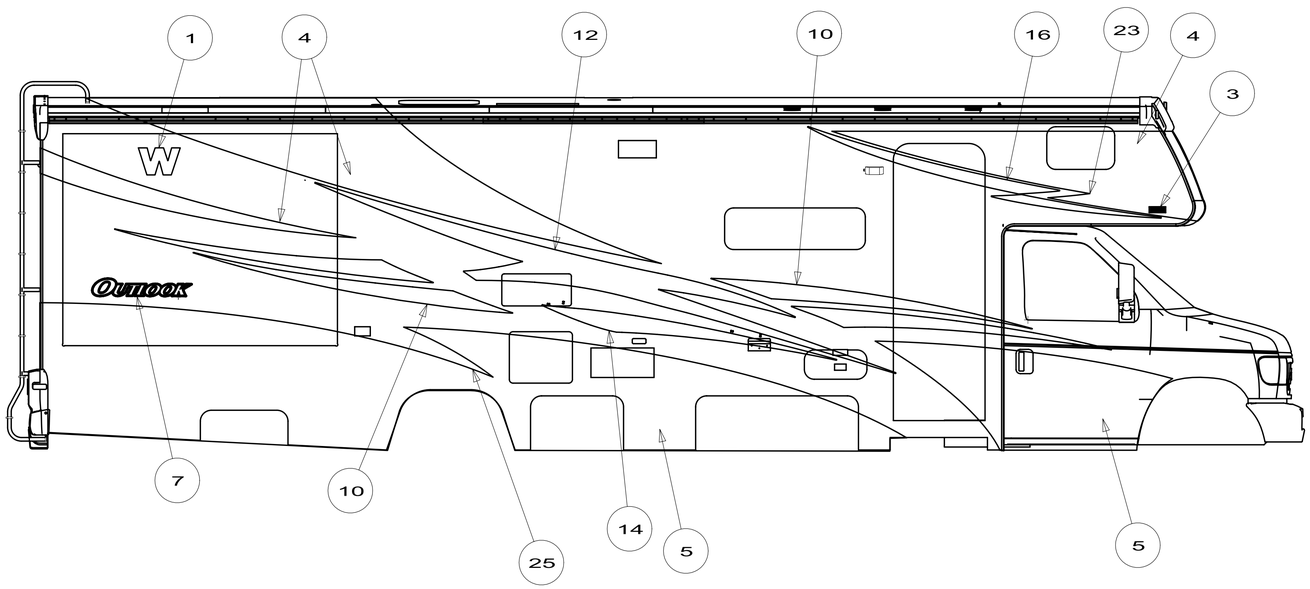

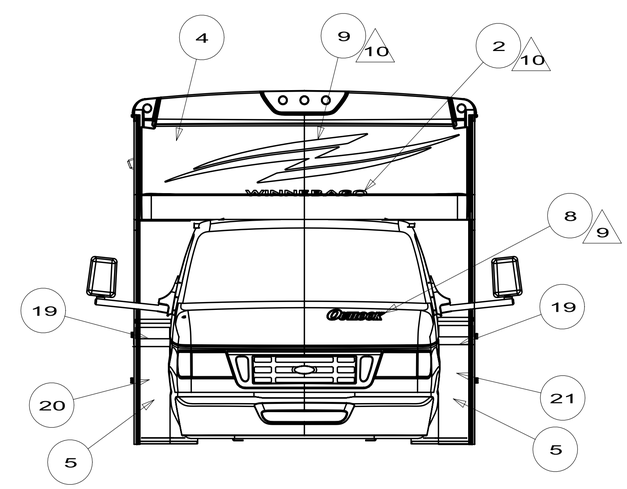

FIRST USED	10 300 OUTLOOK
	DO NOT SCALE DRAWING
TITLE:	GRAPHICS INSTALLATION
SHEET 2	PART NO 170443 REV

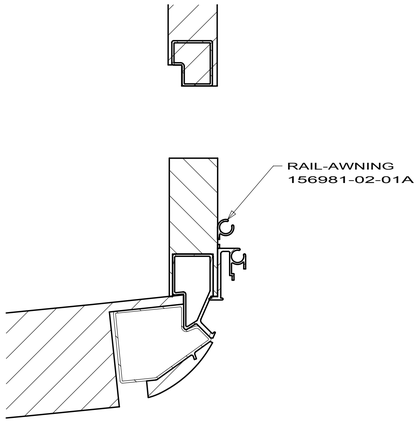

SECTION C-C

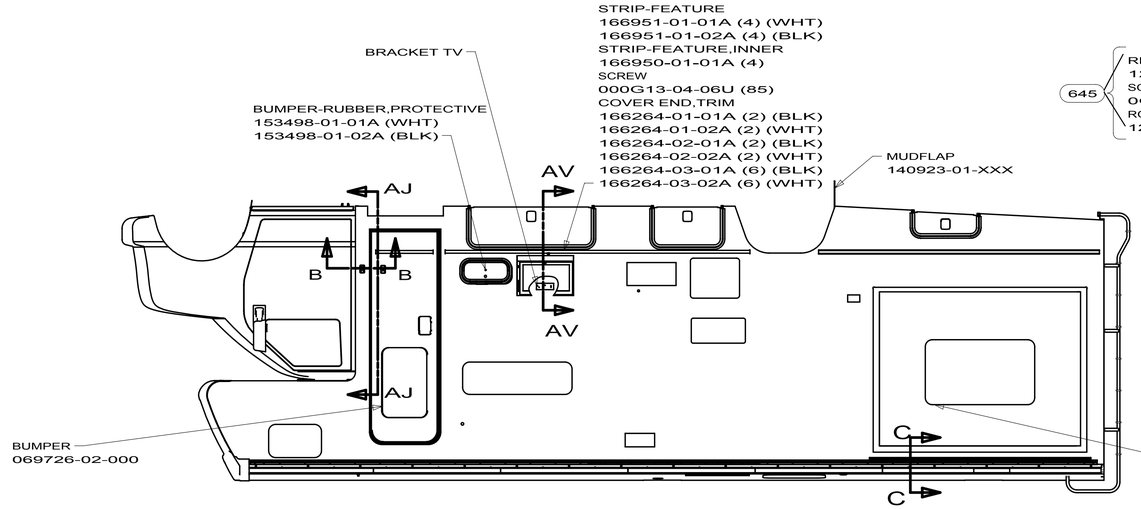

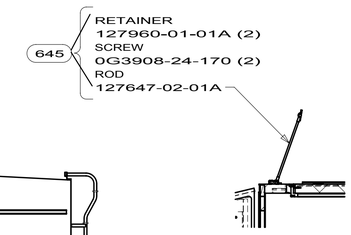

SECTION B-B
DOOR SHOWN IN OPEN POSITION
LOCATE 40mm BELOW FEATURE STRIP

SIDEWALL ASM-RIGHT
P69171-02-XXX — 93B 92K 27G
P69171-05-XXX — 93B 92K 27G 094
P69171-07-XXX — 93B 92K 27G 094 13Y
P69171-2A-XXX — 93A
P69171-5A-XXX — 93A 094
P69171-7A-XXX — 93A 094 13Y

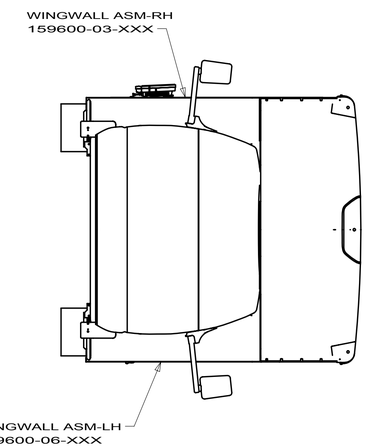

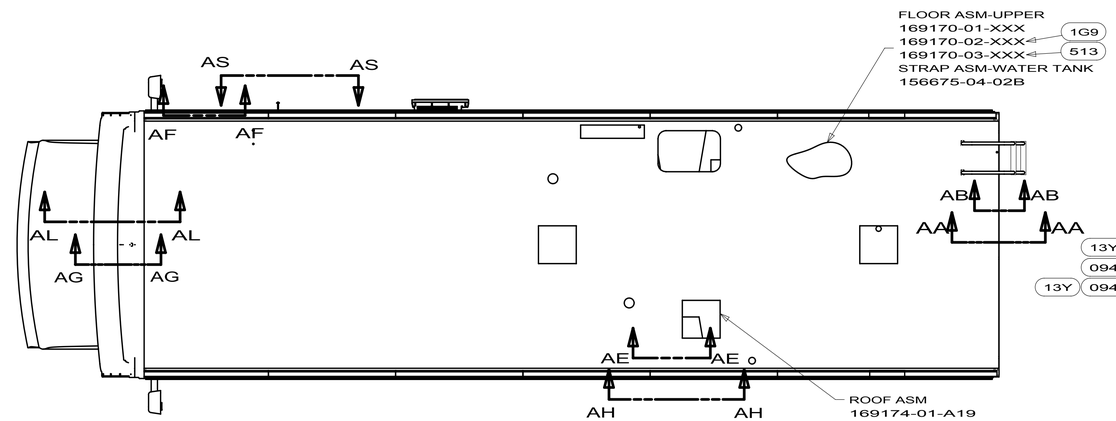

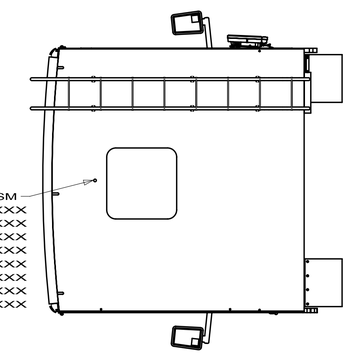

27G 92K 93B
13Y 27G 92K 93B
094 27G 92K 93B
13Y 094 27G 92K 93B
93A
13Y 93A
094 93A
13Y 094 93A

BACKWALL ASM
169173-03-XXX
169173-04-XXX
169173-09-XXX
169173-10-XXX
P69173-03-XXX
P69173-04-XXX
P69173-09-XXX
P69173-10-XXX

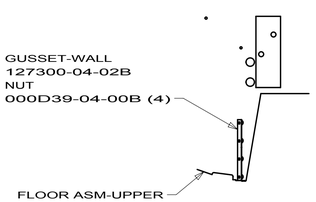

SECTION A-A

SIDEWALL ASM-LEFT
P69172-02-XXX — 93B 92K 27G
P69172-05-XXX — 93B 92K 27G 094
P69172-07-XXX — 93B 92K 27G 094 13Y
P69172-2A-XXX — 93A
P69172-5A-XXX — 93A 094
P69172-7A-XXX — 93A 094 13Y

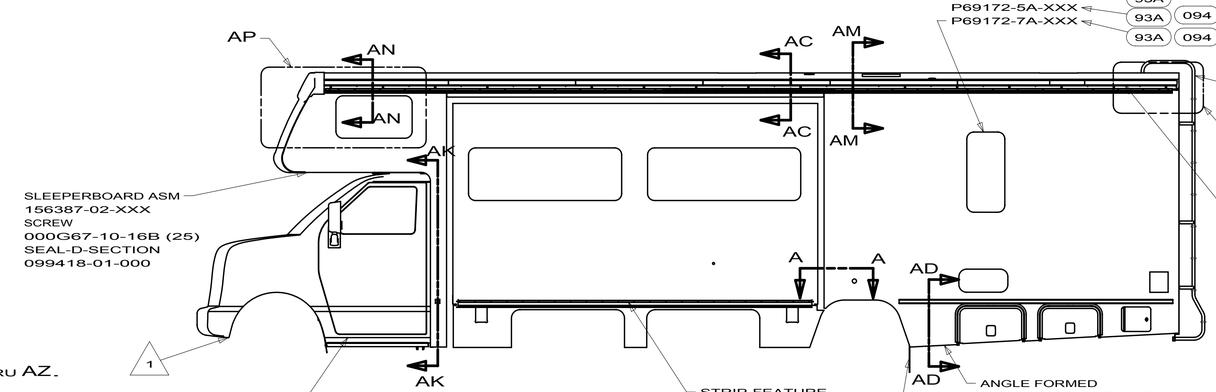

65G	WINDOW COACH-SINGLE PANE
13Y	WINDOWS-COACH-DUAL PANE
645	RENTAL - MOTURIS
1G9	FLOORCOVERING-VINYL-FRONT
513	FLOORCOVERING-VINYL-THRU OUT
92A	EXT FULL BODY PAINT PKG #2
27A	EXT FULL BODY PAINT PKG #1
24B	EXT FULL BODY PAINT PKG #4

10 331C

INDICATES CRITICAL SAFETY PROCEDURE TO BE FOLLOWED

5. APPLY URETHANE ADHESIVE TO TOP OF CHASSIS FLOOR FRAME STRUCTURE PER ES0077.

4. MUDFLAP AND/OR ROCKGUARD TO BE 40mm MIN FROM TIRE WHEN INSTALLED.

3. SEE BODY INSTL-SECTIONS 169134 FOR SECTIONS AA THRU AZ.

2. LINE UP WITH DOOR FRAME.

1. FOR WHEEL COVERS, LINERS, VALVE EXTENSIONS, STABILIZERS, AND TIGHTENING OF LUG NUTS SEE DWG 159483-01-000.

NOTES:

094	WINDOWS - SE-GI
27G	EXTERIOR GRAPHICS PACKAGE #1
64V	SIDEWALL-PREMIUM HIGH GLOSS
64T	SIDEWALLS-HIGH GLOSS
92K	EXTERIOR GRAPHICS PACKAGE #2
24C	EXT FULL BODY PAINT PKG # 3
1GH	EXT PAINT #2 W/FBGLS BOARDS
1GF	EXT PAINT #1 W/FBGLS BOARDS

BODY INSTL-PANEL & TRIM

1 1 169132

2/19/2010

REV	ZONE	REVISION RECORD	DATE	DFTR-ORIG
		REV DATE	DWG NO 140923	

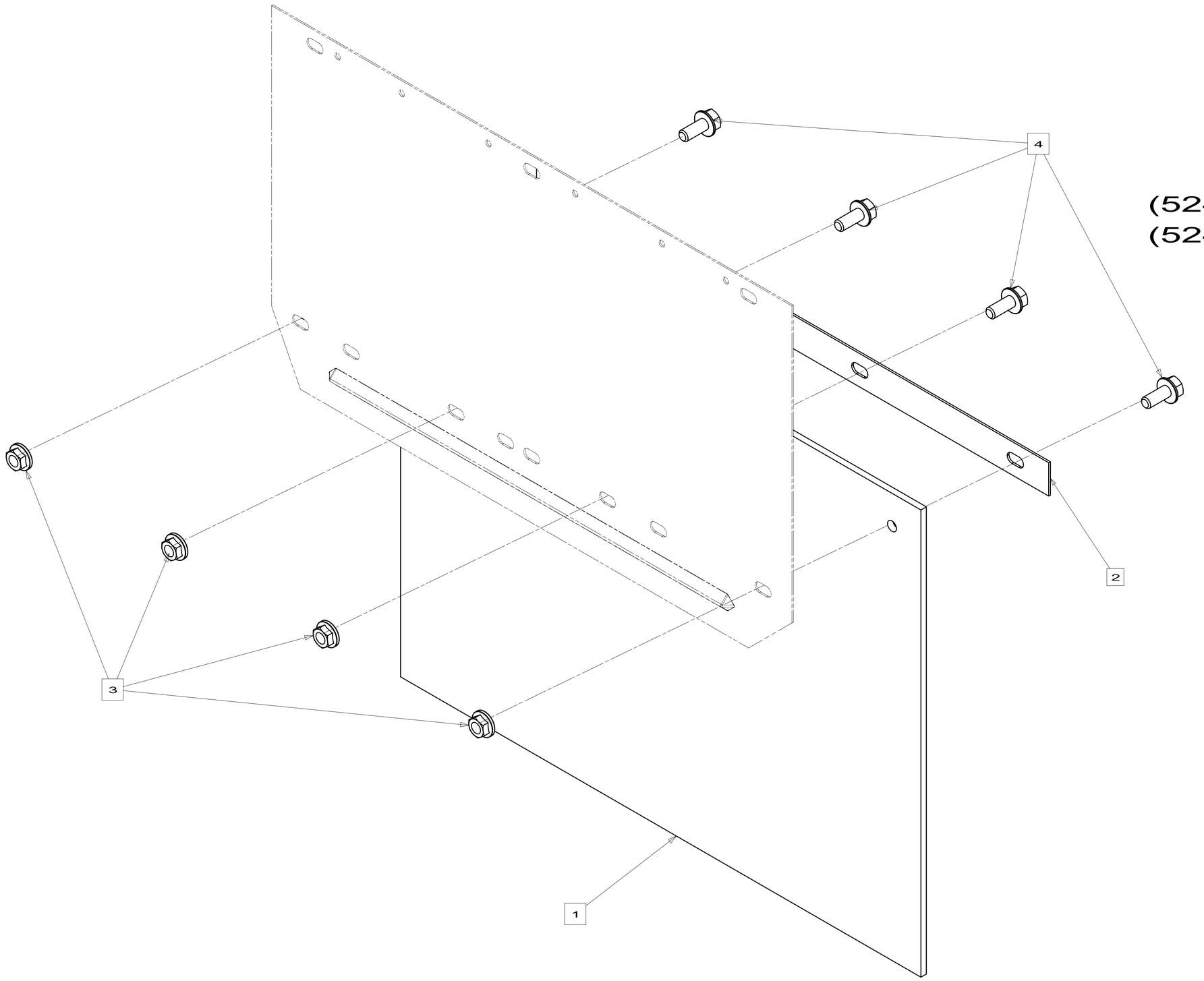

140923-01
331C
500-SERIES
(524A PASSENGER)
(524K PASSENGER)
700-SERIES
D-SERIES
E-SERIES
H SERIES
J SERIES

ITEM	PART NUMBER	DESCRIPTION	QTY
4	000C260512U	BOLT	4
3	000D390500U	NUT	4
2	14092201CHT	PLATE-MUDFLAP	1
1	01751601000	MUD FLAP-BLACK	1

WINNEBAGO INDUSTRIES

COPYRIGHT 2010
WINNEBAGO
INDUSTRIES, INC.

DFTR | ORIG. DATE
CHKR
P.E.
M.E.
DSNR

ALL DIMENSIONS ARE IN MILLIMETERS

FIRST USED
02 MOTORHOMES

UNSPECIFIED TOLERANCES ARE:
WHOLE DIM (X) ±
ONE-PLACE (X.X) ±
TWO-PLACE (X.XX) ±
ANGLE ±

MATERIAL:

THIRD ANGLE PROJECTION

DO NOT SCALE DRAWING

TITLE:
MUD FLAP COMPL

SHEET 1 OF 5 | PART NO 140923 | REV

REF: 1

2/16/2010

RELEASE	REV A	DATE	DWG NO 146388

REV	ZONE	REVISION RECORD	DATE	DFTR-ORIG

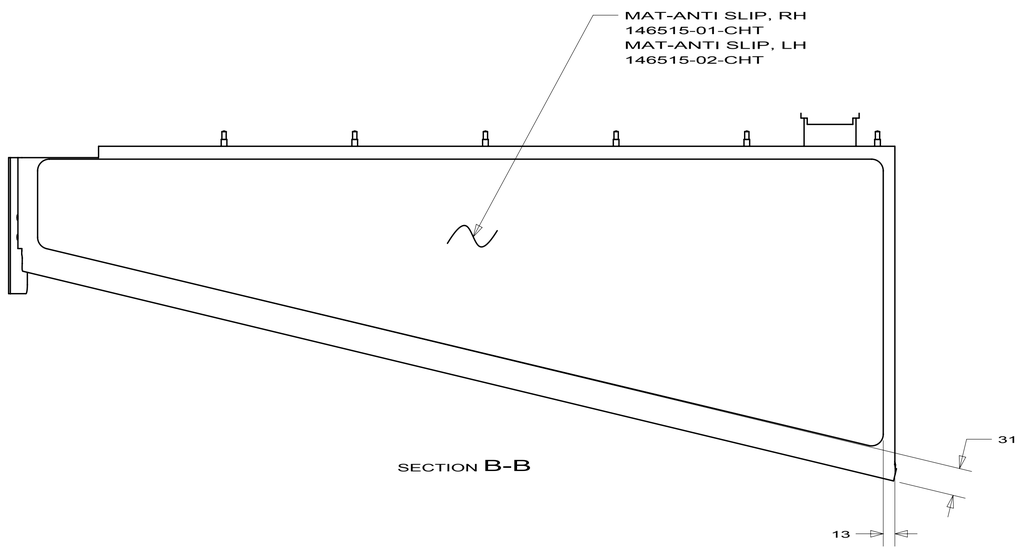

SECTION B-B

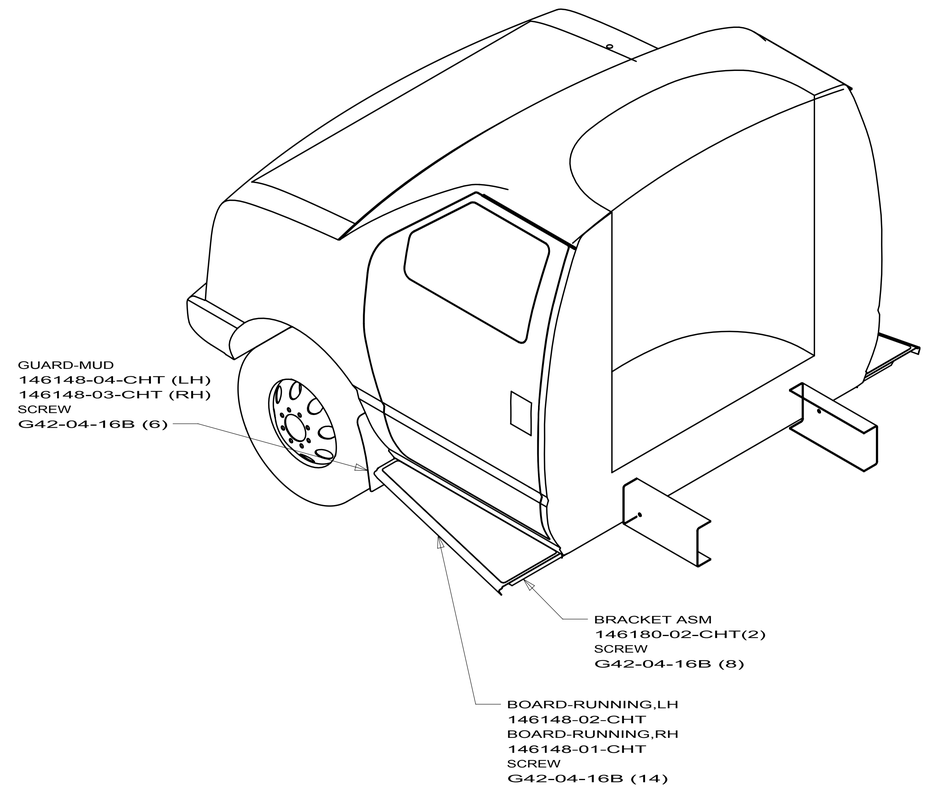

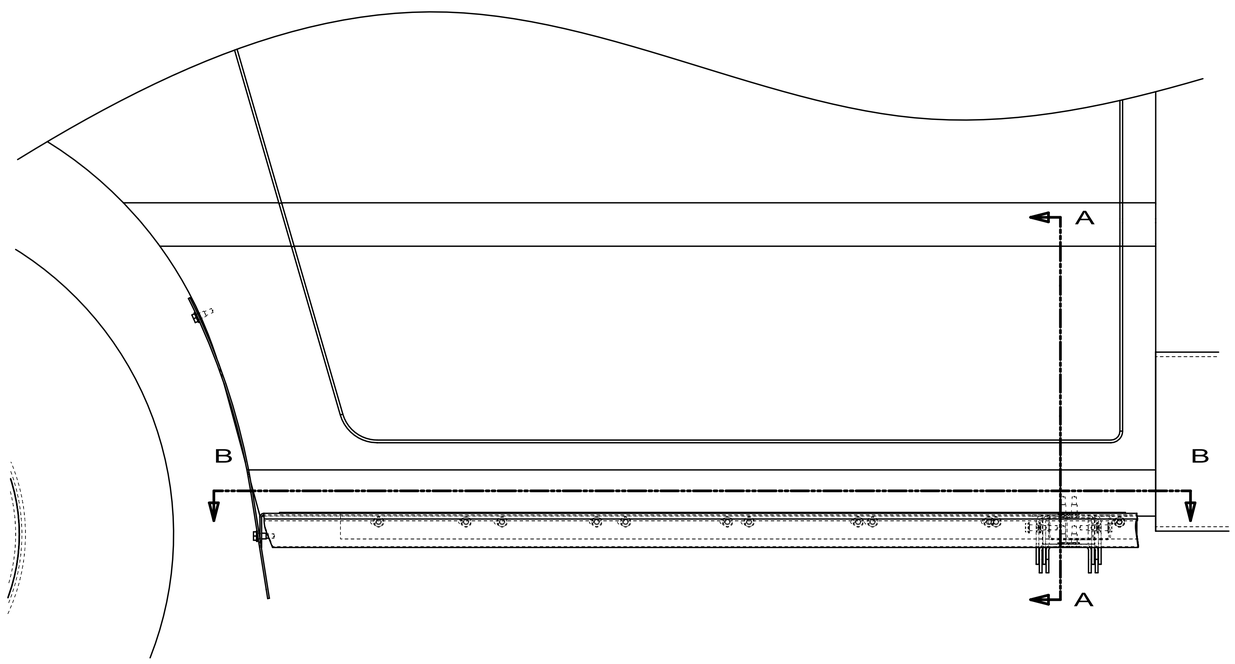

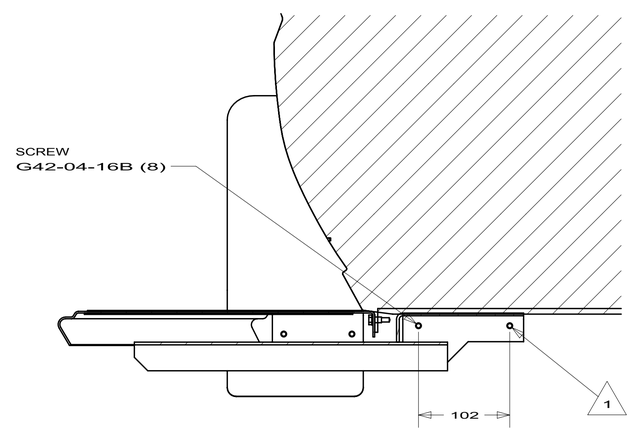

SECTION A-A

1 STRAIGHTEN CAB FLANGE ENOUGH TO FASTEN SCREWS AT GIVEN DIMENSION.

NOTES:

COPYRIGHT 2009
WINNEBAGO
INDUSTRIES, INC.

DFTR	ORIG. DATE
CHKR	ALL DIMENSIONS ARE IN MILLIMETERS
P.E.	
M.E.	FIRST USED
DSNR	04 RENTAL
UNSPECIFIED TOLERANCES ARE: WHOLE DIM (X) : ; ONE-PLACE (X.X) : ; TWO-PLACE (X.XX) : ; ANGLE :	MATERIAL:
THIRD ANGLE PROJECTION	

DO NOT SCALE DRAWING

TITLE: RUNNING BOARD INSTL

SHEET 1 OF 1	PART NO 146388	REV

REF:

RELEASE	REV A	DATE 04--26--04	DWG NO 151642
REV	ZONE	REVISION RECORD	DATE / DFTR-ORIG

DWG NO	SHEET	CHASSIS	SERIES	WHEEL	RUNNING BOARD (RH)	RUNNING BOARD (LH)
151642-01	1	FORD	300/400	FLAIR	149604-01-CHT	149604-02-CHT
151642-02	2	CHEVY	300	FLAIR	149604-10-CHT	149604-11-CHT
151642-03	1	FORD	300/400	MUDFLAP	149604-01-CHT	149604-02-CHT
151642-04	2	CHEVY	300	MUDFLAP	149604-10-CHT	149604-11-CHT
151642-05	1	FORD	700	FLAIR	149604-03-CHT	149604-04-CHT
151642-06	2	CHEVY	700	FLAIR	149604-17-CHT	149604-18-CHT
151642-07	1	FORD	700	MUDFLAP	149604-03-CHT	149604-04-CHT
151642-08	2	CHEVY	700	MUDFLAP	149604-17-CHT	149604-18-CHT
151642-09	1	FORD	700	FLAIR	149604-19-CHT	149604-20-CHT
151642-10	1	FORD	700	MUDFLAP	149604-19-CHT	149604-20-CHT

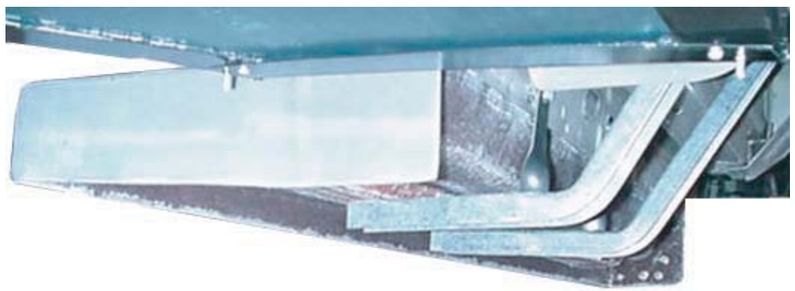

---> FRONT OF VEHICLE

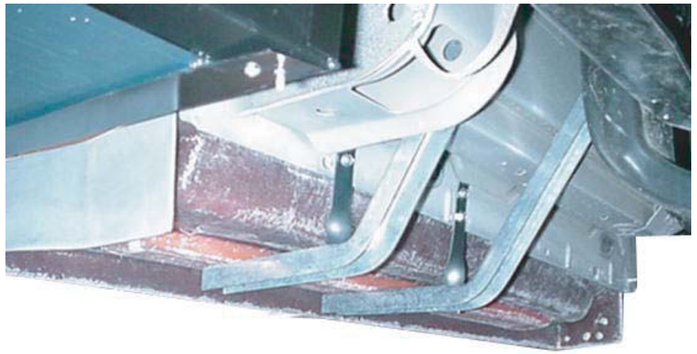

445

750

SEE TAB

RUNNING BOARD-GLASS
(SEE TAB)
MUDFLAP
149604-05-CHT (RH)
149604-06-CHT (LH)
FLAIR
149604-07-CHT (RH)
149604-08-CHT (LH)
MAT-ANTI SLIP
146515-03-CHT (RH)
146515-04-CHT (LH)
HARDWARE KIT
149604-09-CHT

NOTES:

1. LEFT SIDE SHOWN, RIGHT SIDE IS OPPOSITE.

WINNEBAGO INDUSTRIES

COPYRIGHT 2008
WINNEBAGO
INDUSTRIES, INC.

ORIG. DATE 04/19/04

FIRST USED 06 300, 400 & 700 SERIES

MATERIAL:

SPECIFICATION PRINT
DO NOT SCALE

TITLE: RUNNING BOARD INSTL

SHEET 1 OF 2 | PART NO 151642 | REV

1/13/09

DWG NO 151642

LEFT SIDE

DRILL 9mm HOLE
CENTER ON CHANNEL
DOWN FROM TOP 150
ADD TEC SCREW

RIGHT SIDE

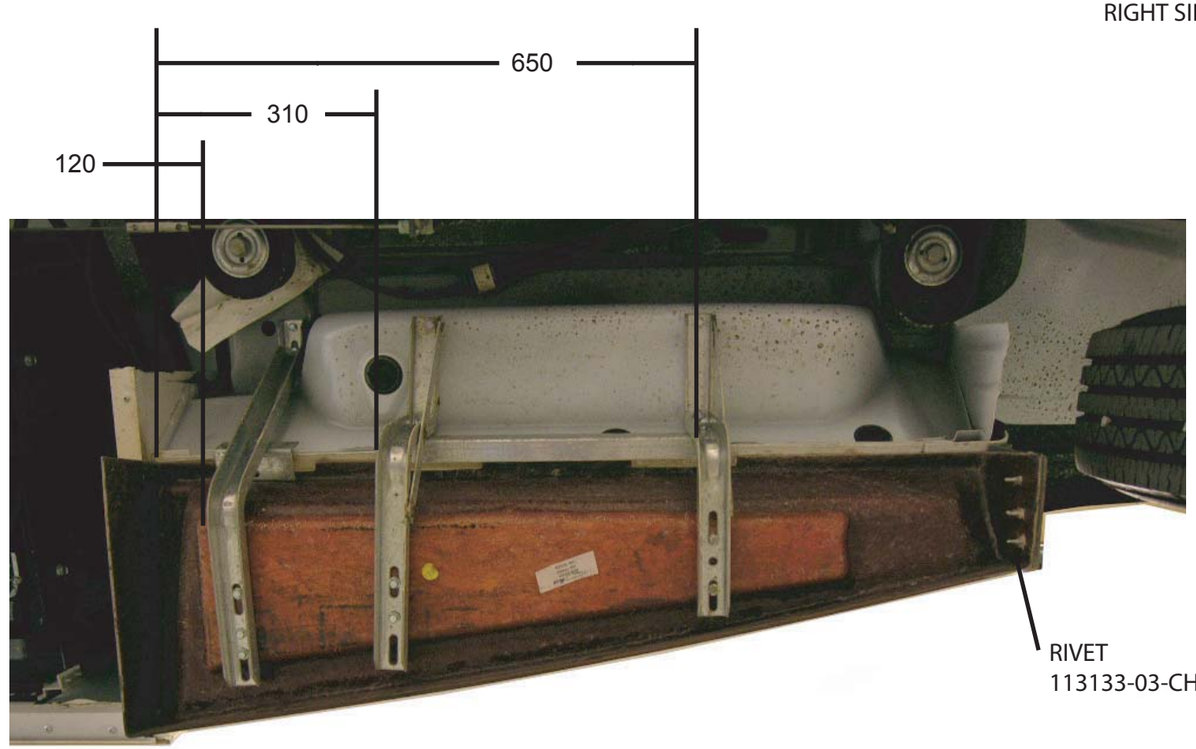

LEFT SIDE SHOWN, RIGHT SIDE OPPOSITE

RUNNING BOARD-GLASS
(SEE TAB)
SEE TAB:
MUDFLAP
149604-14-CHT (RH)
149604-15-CHT (LH)
FLAIR
149604-12-CHT (RH)
149604-13-CHT (LH)
MAT-ANTI SLIP
146515-03-CHT (RH)
146515-04-CHT (LH)
HARDWARE KIT
149604-16-CHT

FIRST USED	07 300 & 700 SERIES
	SPECIFICATION PRINT DO NOT SCALE
TITLE:	RUNNING BOARD INSTL
SHEET 2	PART NO 151642 REV

DWG NO 169171

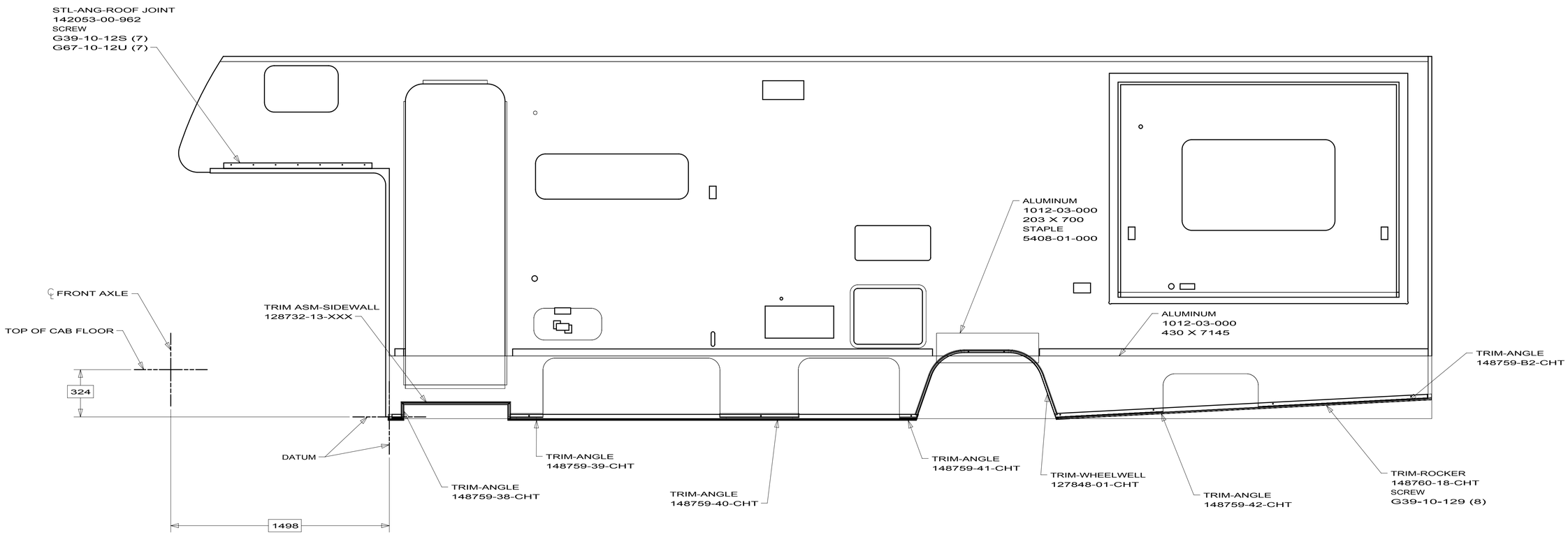

FIRST USED	10 331C
DO NOT SCALE DRAWING	
TITLE:	SIDEWALL ASM-RIGHT
SHEET 1	PART NO 169171 REV

DWG NO 169172

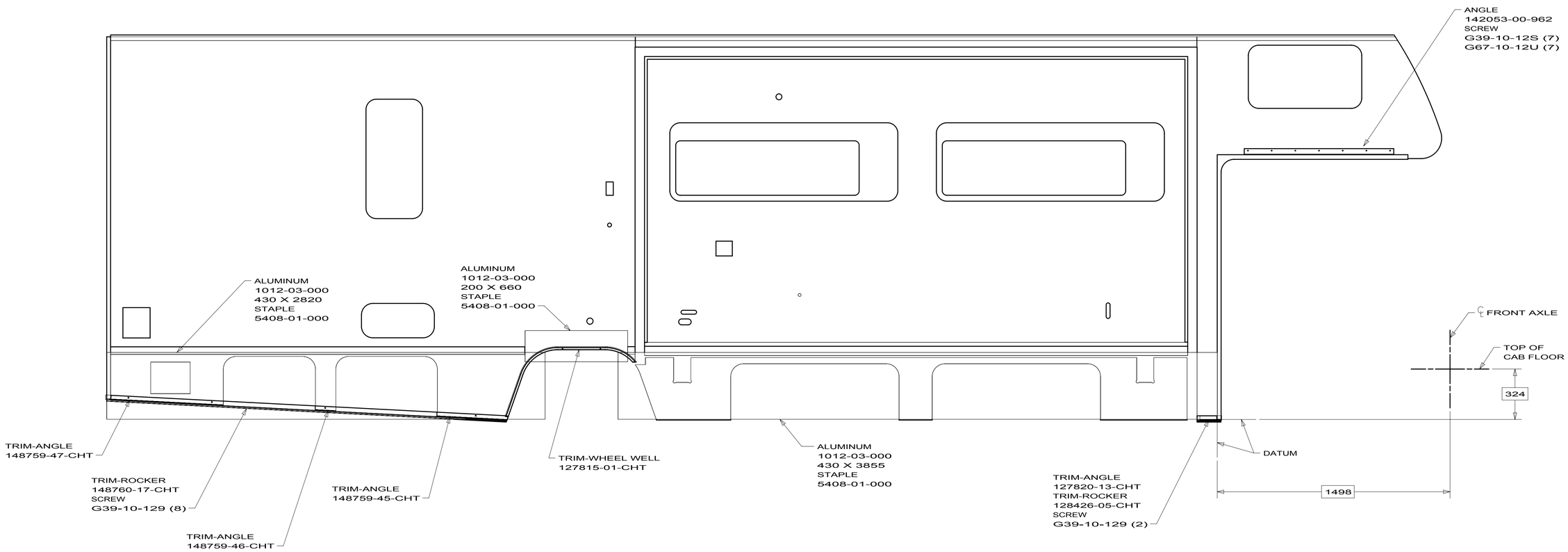

2. PANEL SHOWN FROM INTERIOR SIDE.

1. TOLERANCE FOR CUTOUT ±1.5.

NOTES:

FIRST USED	10 331C
	DO NOT SCALE DRAWING
TITLE:	SIDEWALL ASM-LEFT
SHEET 8	PART NO 169172 REV

DWG NO	CUTOUT DETAIL	
169173-01	A	65G 64T
169173-02	A	13Y 64T
169173-03	A	65G 64V W/FULL BODY PAINT
169173-04	A	13Y 64V W/FULL BODY PAINT
169173-05	A	65G 64V
169173-06	A	13Y 64V
169173-07	B	65G 64T 094
169173-08	B	13Y 64T 094
169173-09	B	65G 64V 094 W/FULL BODY PAINT
169173-10	B	13Y 64V 094 W/FULL BODY PAINT

RELEASE	REV A	DATE	DWG NO 169173

REV	ZONE	REVISION RECORD	DATE	DFTR-ORIG

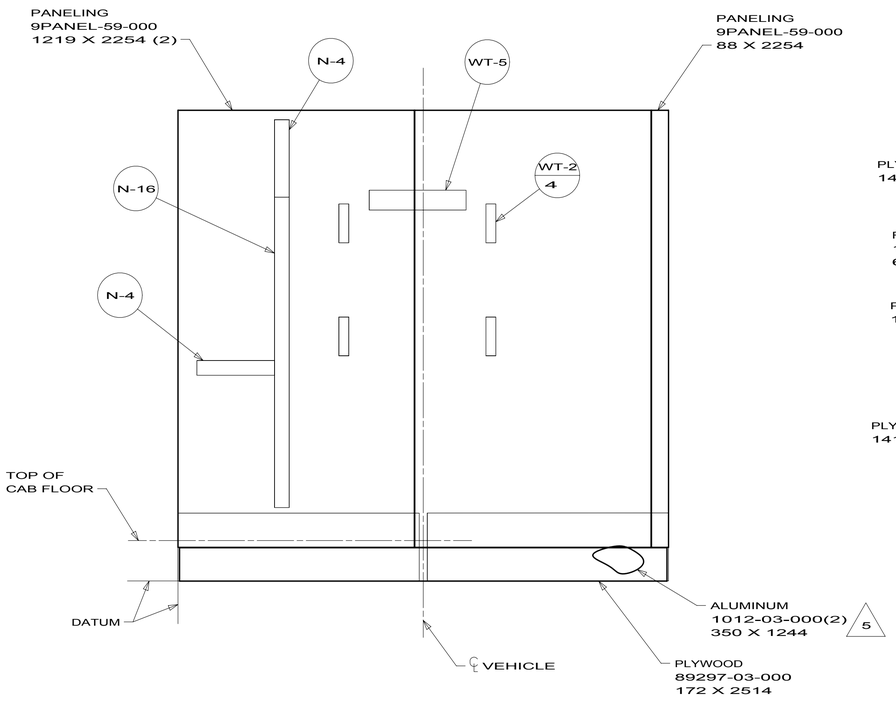

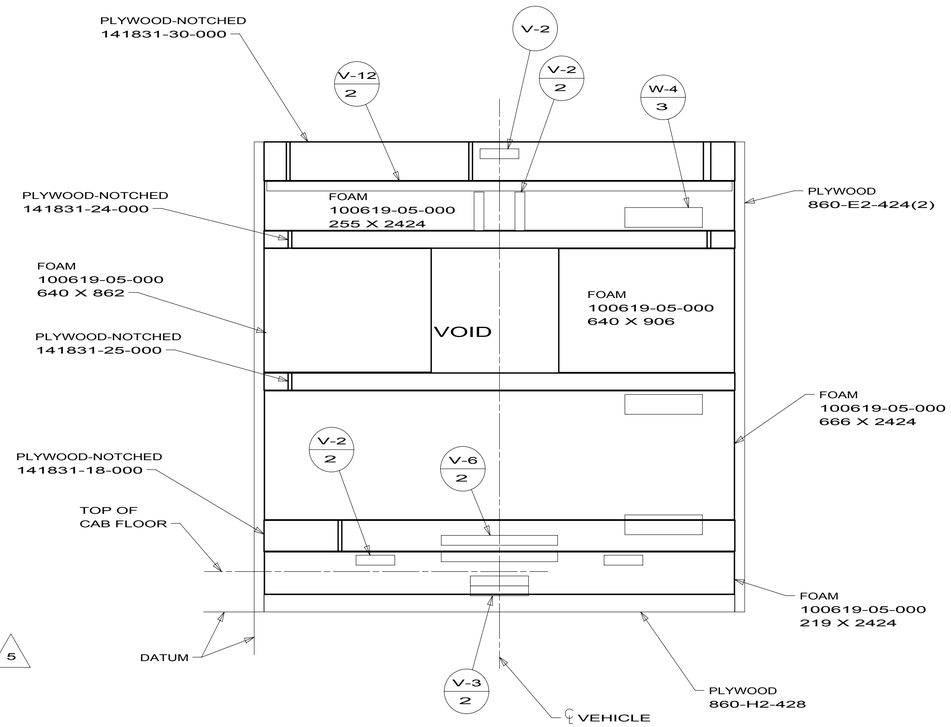

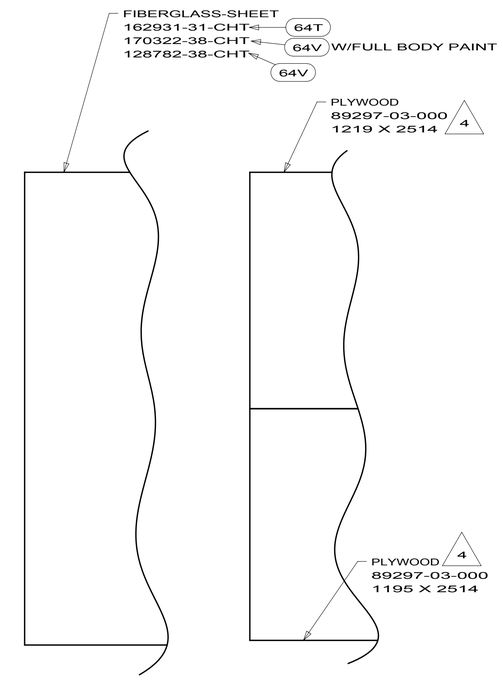

094	WINDOWS - SE-GI
64T	SIDEWALLS-HIGH GLOSS
64V	SIDEWALL-PREMIUM HIGH GLOSS
65G	WINDOW COACH-SINGLE PANE
13Y	WINDOWS-COACH-DUAL PANE

4. NOT USED WITH 64V

3. TOLERANCE FOR LAYUP ±2.5, STEEL ±6.0.

2. SEE ES0064 FOR ADHESIVES.

1. PANEL SHOWN FROM EXTERIOR SIDE.

NOTES:

X-X FOR STEEL CALLOUTS SEE DWG NO. 114074-01-000

NOTICE

CHANGES TO THIS SHEET MAY AFFECT OTHERS

WINNEBAGO INDUSTRIES

COPYRIGHT 2009
WINNEBAGO
INDUSTRIES, INC.

DFTR	ORIG. DATE
CHKR	ALL DIMENSIONS ARE IN MILLIMETERS
P.E.	
M.E.	FIRST USED
DSNR	10 331C

UNSPECIFIED TOLERANCES ARE:
WHOLE DIM (X) :
ONE-PLACE (X.X) :
TWO-PLACE (X.XX) :
ANGLE :
3

MATERIAL:

THIRD ANGLE PROJECTION

DO NOT SCALE DRAWING

TITLE: BACKWALL ASM

SHEET 1 OF 2 | PART NO 169173 | REV

REF:

DWG NO 169173

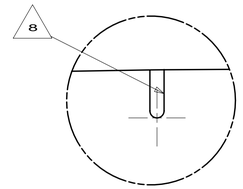

DETAIL BA
3 PLCS

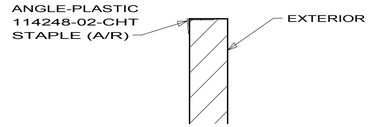

SECTION BB-BB

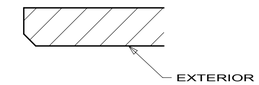

SECTION BC-BC

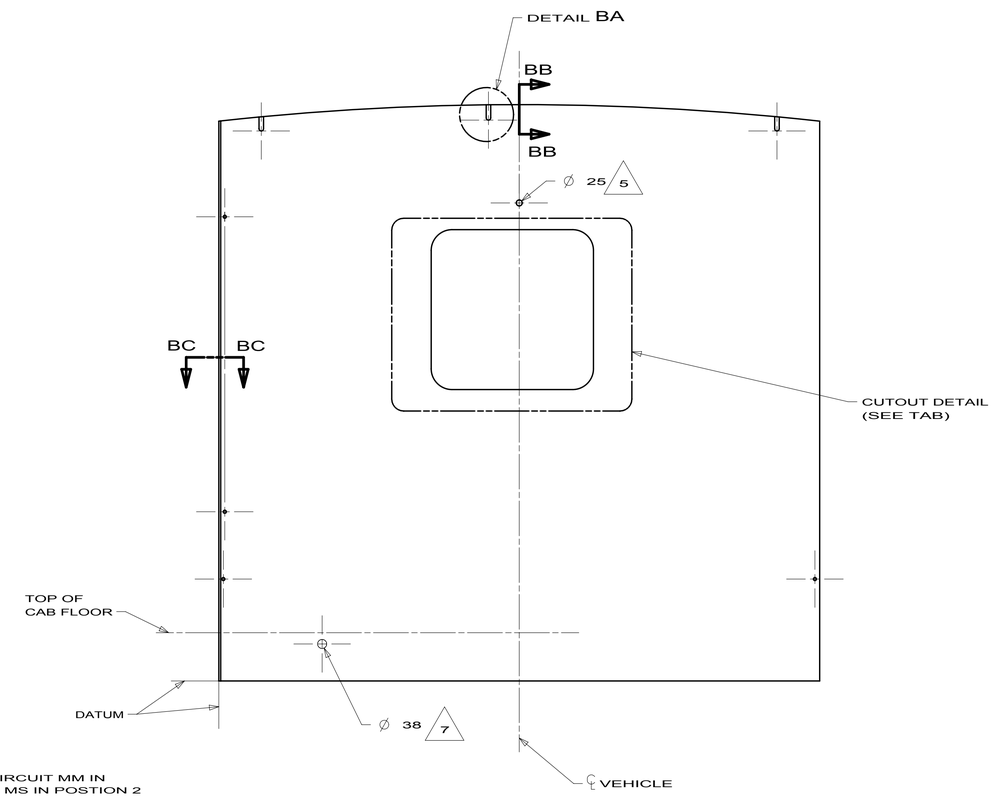

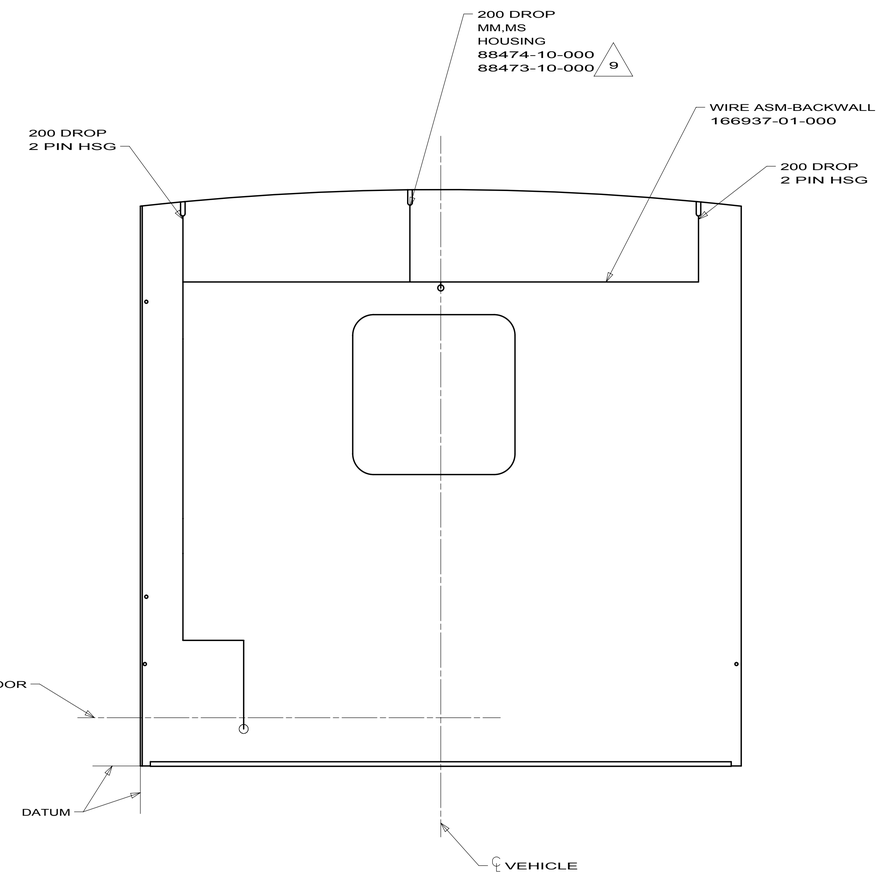

9. INSTALL HOUSING WITH CIRCUIT MM IN POSITION 1 AND CURCUIT MS IN POSTION 2
TS CONNECTORS TO BE INSTALLED IN HS HOUSING
TP CONNECTORS TO BE INSTALLED IN HP HOUSING

8. THRU EXTERIOR SKIN ONLY.

7. THRU FOAM AND INNER PANEL.

6. ALL RAII 9.5 UNLESS OTHERWISE SPECIFIED.

5. THRU FOAM AND EXTERIOR SKIN.

4. ALL WIRES SHOWN DENOTE ROUTED PATH.

3. TOLERANCE FOR CUTOUT± 1.5, WIRING± 2.5, WIRE DROPS +150.0/-0..

2. CAP SEAL TRIM WITH SEALANT 72889-20-000.

1. PANEL SHOWN FROM EXTERIOR SIDE.

NOTES:

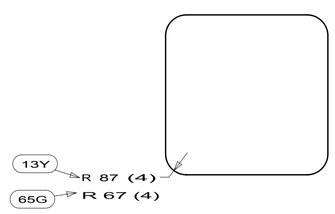

CUTOUT DETAIL A

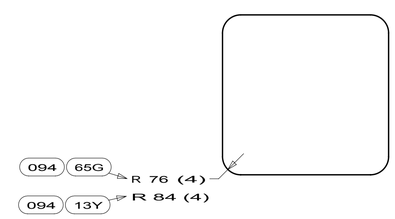

CUTOUT DETAIL B

094 WINDOWS - SE-GI
13Y WINDOWS-COACH-DUAL PANE
65G WINDOW COACH-SINGLE PANE

NOTICE

CHANGES TO THIS SHEET
MAY AFFECT OTHERS

FIRST USED	10 331C
	DO NOT SCALE DRAWING
TITLE:	BACKWALL ASM
SHEET 2	PART NO 169173 REV

DWG NO	SHEET	CHASSIS	SERIES	WHEEL	RUNNING BOARD (RH)	RUNNING BOARD (LH)
173679-01	1	FORD	300	FLAIR	173458-01-CHT	173458-02-CHT
173679-02	1	FORD	700	FLAIR	173458-03-CHT	173458-04-CHT

RELEASE REV A DATE 04--27--09 DWG NO 173679

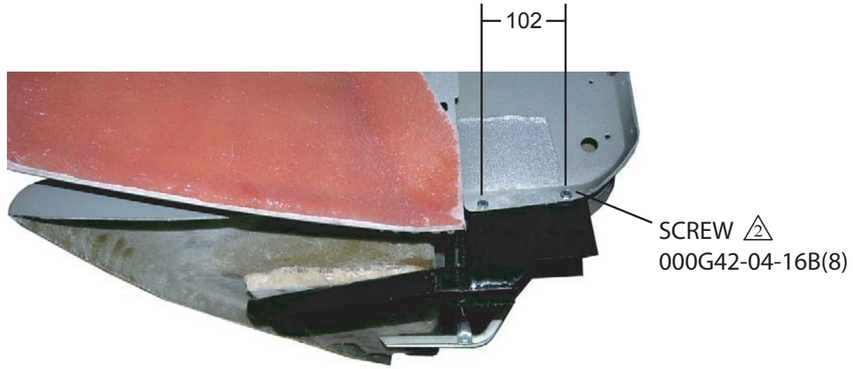

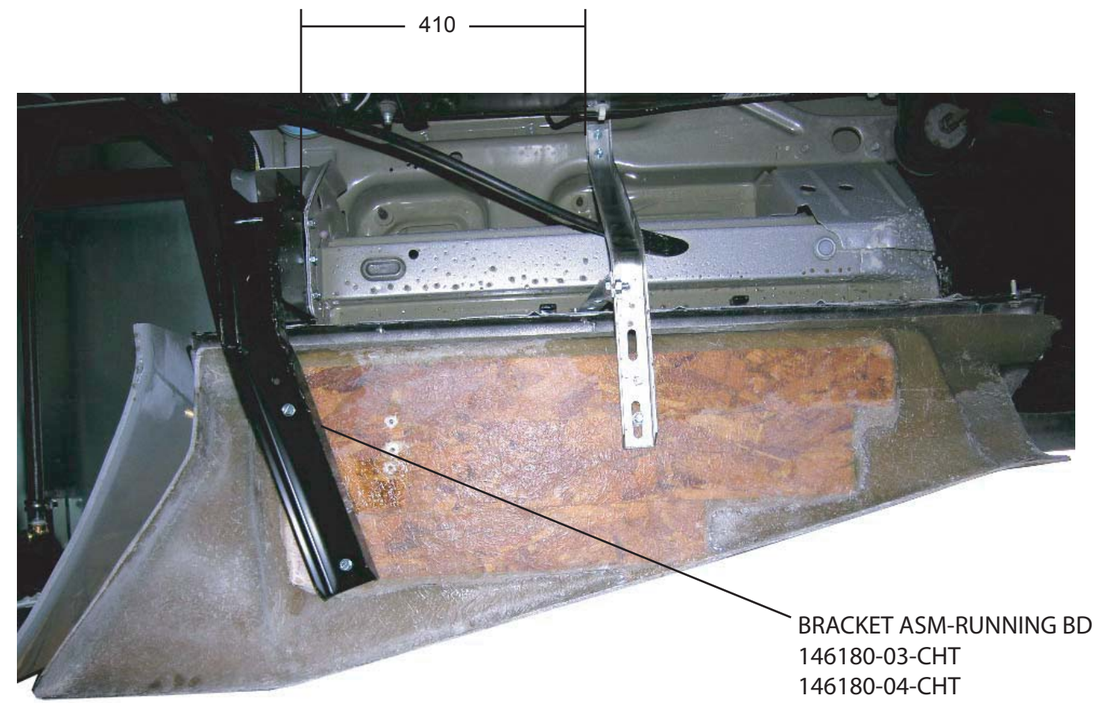

---> FRONT OF VEHICLE

RUNNING BOARD-GLASS
(SEE TAB)
MAT-ANTI SLIP
146515-05-CHT (RH)
146515-06-CHT (LH)
HARDWARE KIT
173458-05-000 (UP TO 07-07-09)
149604-09-000 (QTY 0.50) (AFTER 07-08-09)

⚠2 STRAIGHTEN CAB FLANGE ENOUGH TO FASTEN SCREW AT GIVEN DIMENSION.

1. LEFT SIDE SHOWN, RIGHT SIDE IS OPPOSITE.

NOTES:

WINNEBAGO INDUSTRIES

COPYRIGHT 2009
WINNEBAGO
INDUSTRIES, INC.

ORIG. DATE 04/27/09

FIRST USED 10 300 SERIES

MATERIAL: .

SPECIFICATION PRINT
DO NOT SCALE

TITLE: RUNNING BOARD INSTL

SHEET 1 OF 1 | PART NO 173679 | REV

07/23/09

DWG NO	ROOM ASM-SLIDEOUT	
169143-02	169143-12-XXX	
169143-04	169143-14-XXX	094
169143-06	169143-16-XXX	094 13Y

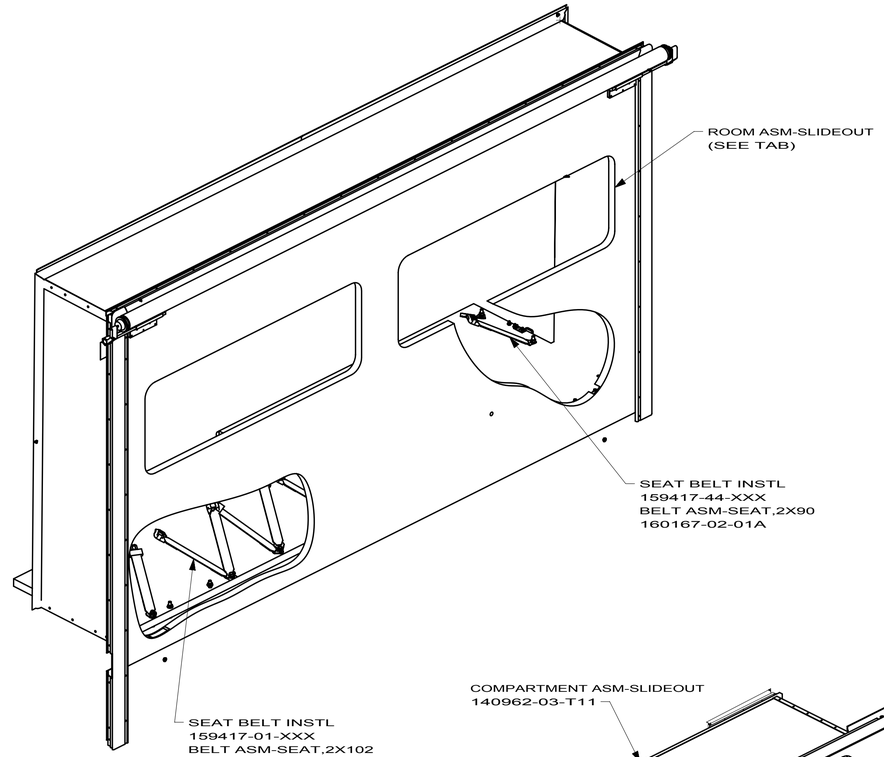

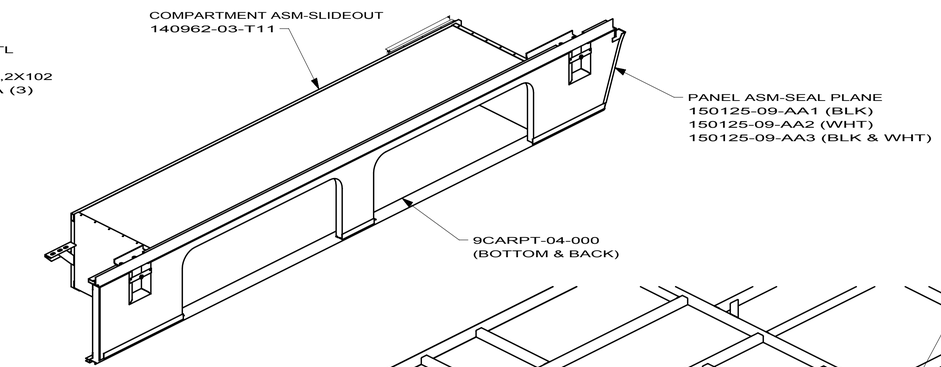

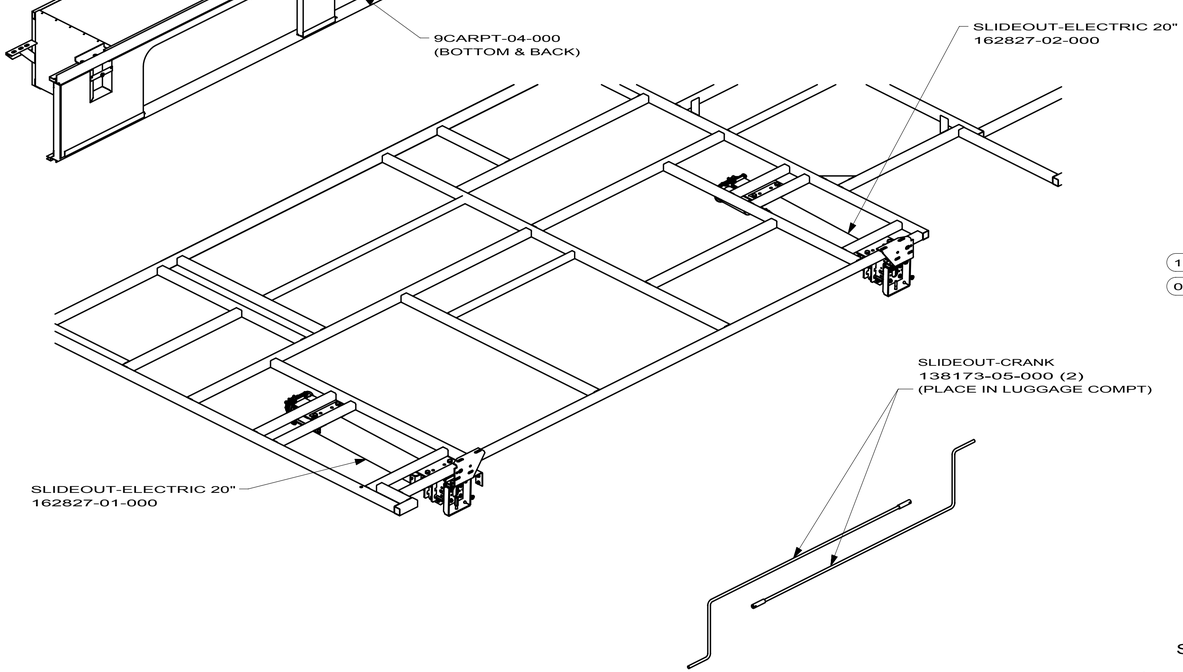

18. SECURE ONE OF THE SLIDEOUT ROOM ACTIVATION KEYS TO THE ROD-LOCK STRAP. KEYS ARE INCLUDED WITH SWITCH ASSEMBLY P/N 163097(REF).

17. SCREWS CAN NOT BE REUSED. ANY TIME A SCREW IS REM0VED IT MUST BE DISCARDED AND REPLACED WITH A NEW SCREW TO INSURE THE THREADS SEAL.

16. FILL ALL NAIL HOLES PER ES0068.

15. ADJUST THIS DIMENSION TO ACHIEVE 8mm±2 OF FALL AT THE END OF THE RAM STROKE.

14. USE POLY-CLEAR 047034-07-000 AND ATTACH IT USING WASHER 044533-01-000 TO PROTECT THE SLIDEOUT FLOOR.

13. SEE SEALANT MANUAL.

12. CRANK FOR ROOM RETRACTION PROVIDED WITH ARMS BY KWIKEE.

11. TORQUE TO 77 Nm (57 FT-lb).

10. USE SCREW 000G39-08-08U TO HOLD EACH END OF TRIM.

9. AFTER ALL ADJUSTMENTS ARE COMPLETE, TIGHTEN THE JAM NUTS.

8. LOOSEN BOLTS TO ALLOW ROOM TO MOVE SIDE TO SIDE IN THE SLOTS ON THE MOUNTING BRACKETS UNTIL IT IS CENTERED IN THE OPENING.

7. LOOSEN JAM NUTS AND BOLTS TO ADJUST BOLT TO MOVE ROOM UP OR DOWN TO BE CENTERED IN THE SIDEWALL OPENING.

6. TORQUE TO 56 Nm (41 FT-lb).

5. THIS IS THE NOMINAL DIMENSION. THE PARTS SHOULD BE ADJUSTED AS REQUIRED FROM THERE.

4. THE RETRACTED LENGTH IS ADJUSTED BY THREADING THE STOP BOLT IN OR OUT UNTIL THE OUTSIDE WALL OF THE ROOM SEALS AGAINST THE SIDEWALL.

3. THE EXTENDED LENGTH IS ADJUSTED BY TURNING THE LOCK NUTS ON THE ADJUSTER BOLT UNTIL THE INSIDE TRIM OF THE ROOM SEALS AGAINST THE SIDEWALL.

2. TORQUE TO 9.5-12.2 Nm (7-9 FT-lb).

1. FOR ADDITIONAL INFORMATION SEE THE WIRE INSTALLATION FRONT END THE LEVELING JACK INSTALLATION DRAWINGS.

NOTES:

13Y WINDOWS-COACH-DUAL PANE
094 WINDOWS - SE-GI

10 331C

SLIDEOUT COMPL

1 5 169143

3/12/2010

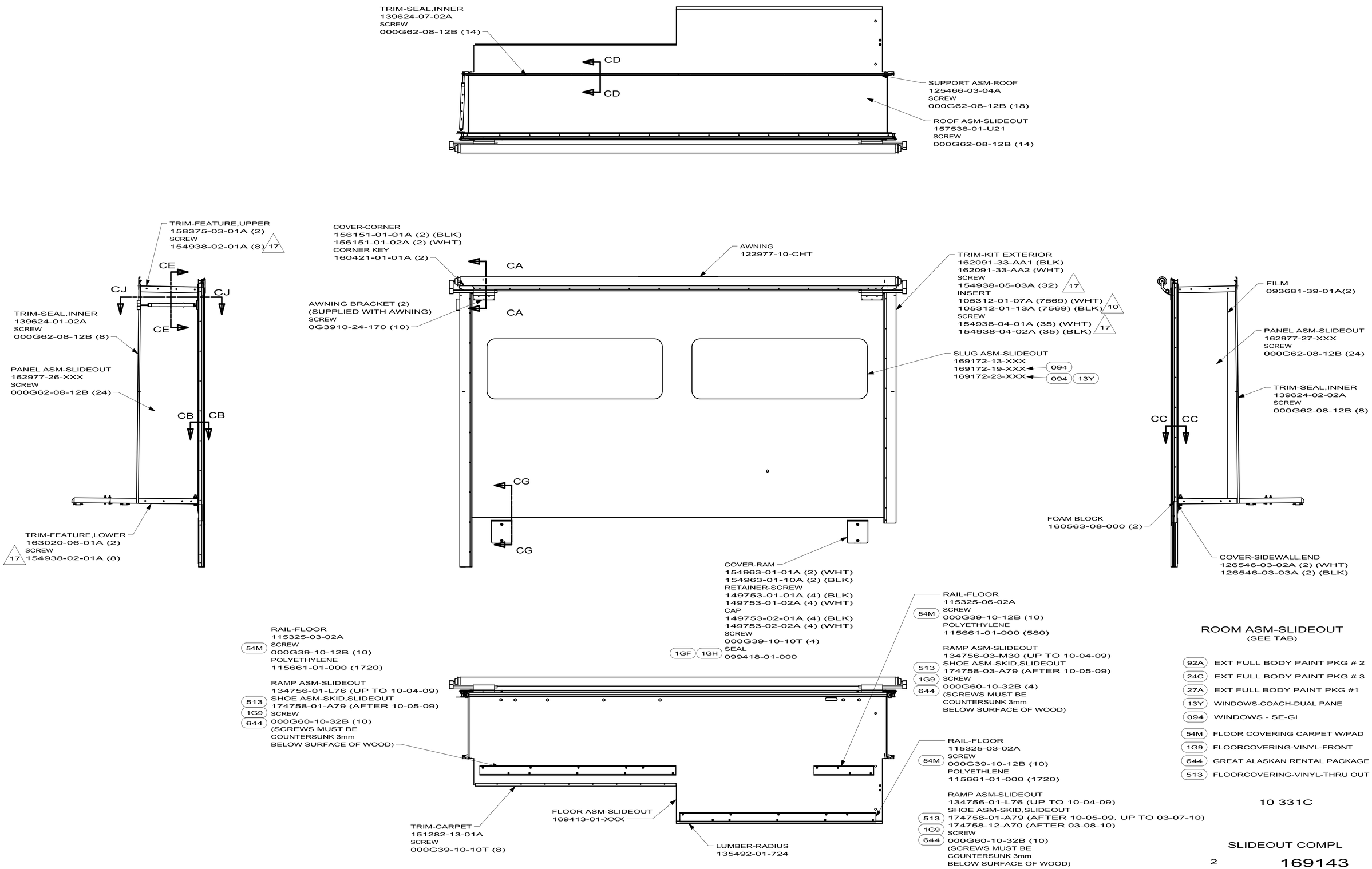
TRIM-SEAL,INNER
139624-07-02A
SCREW
000G62-08-12B (14)
CD
CD
SUPPORT ASM-ROOF
125466-03-04A
SCREW
000G62-08-12B (18)
ROOF ASM-SLIDEOUT
157538-01-U21
SCREW
000G62-08-12B (14)
TRIM-FEATURE,UPPER
158375-03-01A (2)
SCREW
154938-02-01A (8) 17
CE
CJ
CJ
CE
TRIM-SEAL,INNER
139624-01-02A
SCREW
000G62-08-12B (8)
PANEL ASM-SLIDEOUT
162977-26-XXX
SCREW
000G62-08-12B (24)
CB
CB
TRIM-FEATURE,LOWER
163020-06-01A (2)
17 SCREW
154938-02-01A (8)
COVER-CORNER
156151-01-01A (2) (BLK)
156151-01-02A (2) (WHT)
CORNER KEY
160421-01-01A (2)
AWNING BRACKET (2)
(SUPPLIED WITH AWNING)
SCREW
0G3910-24-170 (10)
CA
CA
AWNING
122977-10-CHT
TRIM-KIT EXTERIOR
162091-33-AA1 (BLK)
162091-33-AA2 (WHT)
SCREW
154938-05-03A (32) 17
INSERT
105312-01-07A (7569) (WHT)
105312-01-13A (7569) (BLK) 10
SCREW
154938-04-01A (35) (WHT)
154938-04-02A (35) (BLK) 17
SLUG ASM-SLIDEOUT
169172-13-XXX
169172-19-XXX 094
169172-23-XXX 094 13Y
CG
CG
COVER-RAM
154963-01-01A (2) (WHT)
154963-01-10A (2) (BLK)
RETAINER-SCREW
149753-01-01A (4) (BLK)
149753-01-02A (4) (WHT)
CAP
149753-02-01A (4) (BLK)
149753-02-02A (4) (WHT)
SCREW
000G39-10-10T (4)
1GF 1GH SEAL
099418-01-000
FILM
093681-39-01A(2)
PANEL ASM-SLIDEOUT
162977-27-XXX
SCREW
000G62-08-12B (24)
TRIM-SEAL,INNER
139624-02-02A
SCREW
000G62-08-12B (8)
CC
CC
FOAM BLOCK
160563-08-000 (2)
COVER-SIDEWALL,END
126546-03-02A (2) (WHT)
126546-03-03A (2) (BLK)
RAIL-FLOOR
115325-03-02A
54M SCREW
000G39-10-12B (10)
POLYETHYLENE
115661-01-000 (1720)
RAMP ASM-SLIDEOUT
134756-01-L76 (UP TO 10-04-09)
513 SHOE ASM-SKID,SLIDEOUT
174758-01-A79 (AFTER 10-05-09)
1G9 SCREW
644 000G60-10-32B (10)
(SCREWS MUST BE
COUNTERSUNK 3mm
BELOW SURFACE OF WOOD)
TRIM-CARPET
151282-13-01A
SCREW
000G39-10-10T (8)
FLOOR ASM-SLIDEOUT
169413-01-XXX
LUMBER-RADIUS
135492-01-724
RAIL-FLOOR
115325-06-02A
54M SCREW
000G39-10-12B (10)
POLYETHYLENE
115661-01-000 (580)
RAMP ASM-SLIDEOUT
134756-03-M30 (UP TO 10-04-09)
513 SHOE ASM-SKID,SLIDEOUT
174758-03-A79 (AFTER 10-05-09)
1G9 SCREW
644 000G60-10-32B (4)
(SCREWS MUST BE
COUNTERSUNK 3mm
BELOW SURFACE OF WOOD)
RAIL-FLOOR
115325-03-02A
54M SCREW
000G39-10-12B (10)
POLYETHLENE
115661-01-000 (1720)
RAMP ASM-SLIDEOUT
134756-01-L76 (UP TO 10-04-09)
SHOE ASM-SKID,SLIDEOUT
513 174758-01-A79 (AFTER 10-05-09, UP TO 03-07-10)
1G9 174758-12-A70 (AFTER 03-08-10)
SCREW
644 000G60-10-32B (10)
(SCREWS MUST BE
COUNTERSUNK 3mm
BELOW SURFACE OF WOOD)
ROOM ASM-SLIDEOUT
(SEE TAB)
92A EXT FULL BODY PAINT PKG # 2
24C EXT FULL BODY PAINT PKG # 3
27A EXT FULL BODY PAINT PKG #1
13Y WINDOWS-COACH-DUAL PANE
094 WINDOWS - SE-GI
54M FLOOR COVERING CARPET W/PAD
1G9 FLOORCOVERING-VINYL-FRONT
644 GREAT ALASKAN RENTAL PACKAGE
513 FLOORCOVERING-VINYL-THRU OUT
10 331C
SLIDEOUT COMPL
2
169143

3/12/2010

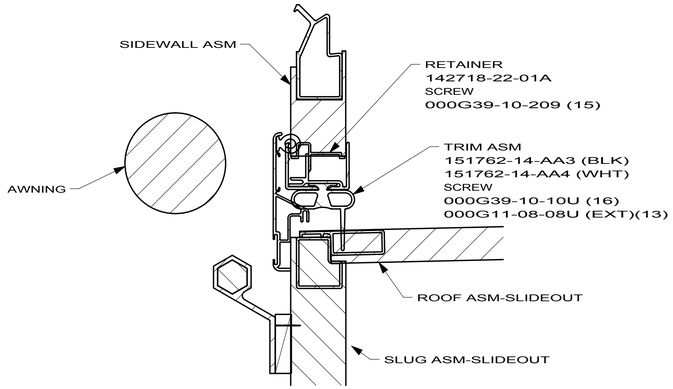

SECTION CA-CA

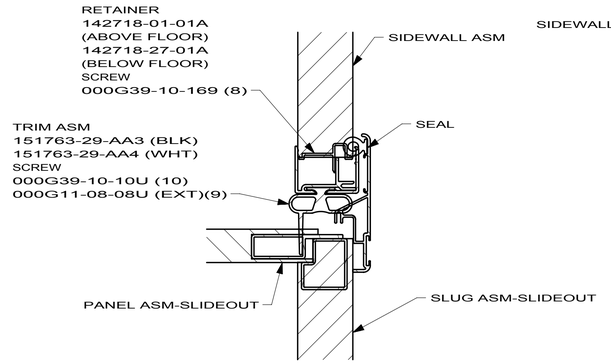

SECTION CB-CB

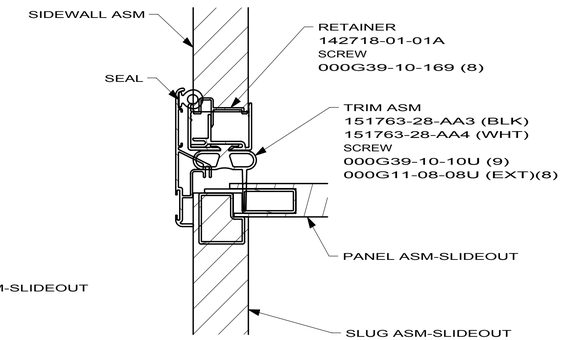

SECTION CC-CC

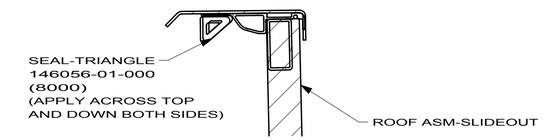

SECTION CD-CD

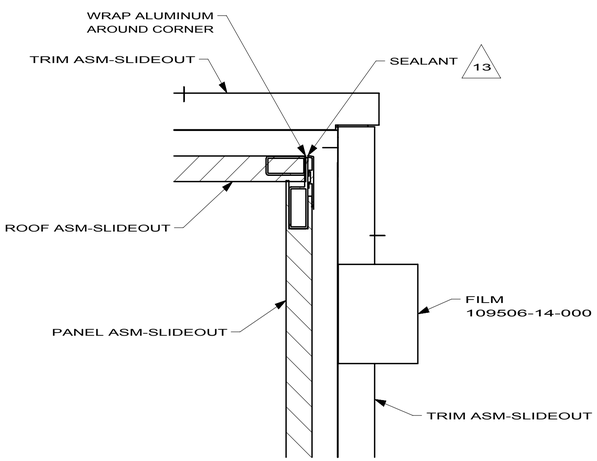

SECTION CE-CE

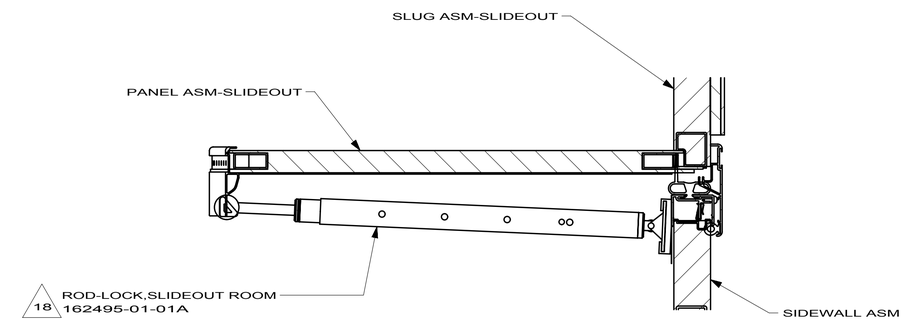

SECTION CJ-CJ

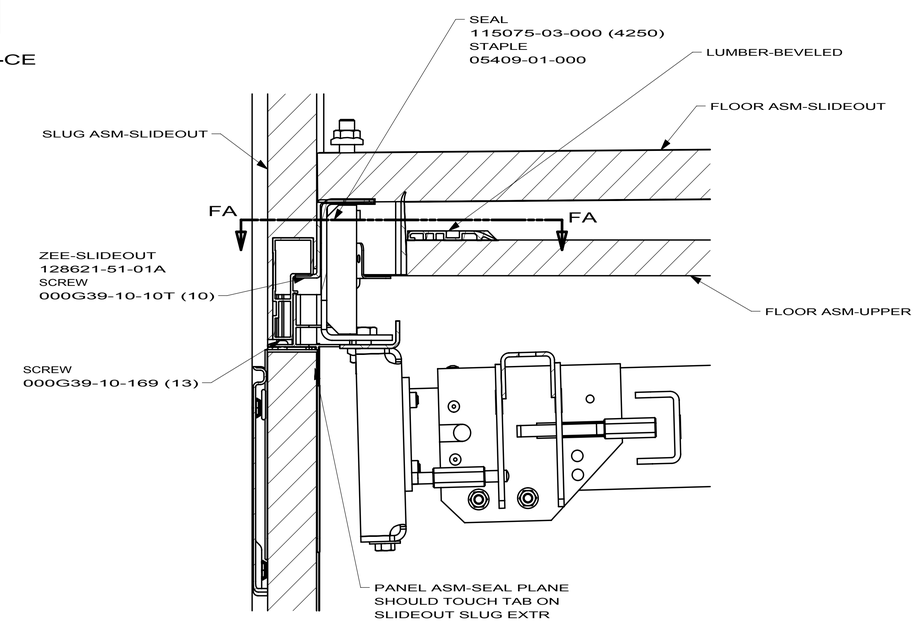

SECTION CG-CG

54M FLOOR COVERING CARPET W/PAD
1G9 FLOORCOVERING-VINYL-FRONT
513 FLOORCOVERING-VINYL-THRU OUT

10 331C

SLIDEOUT COMPL

3 169143

3/12/2010

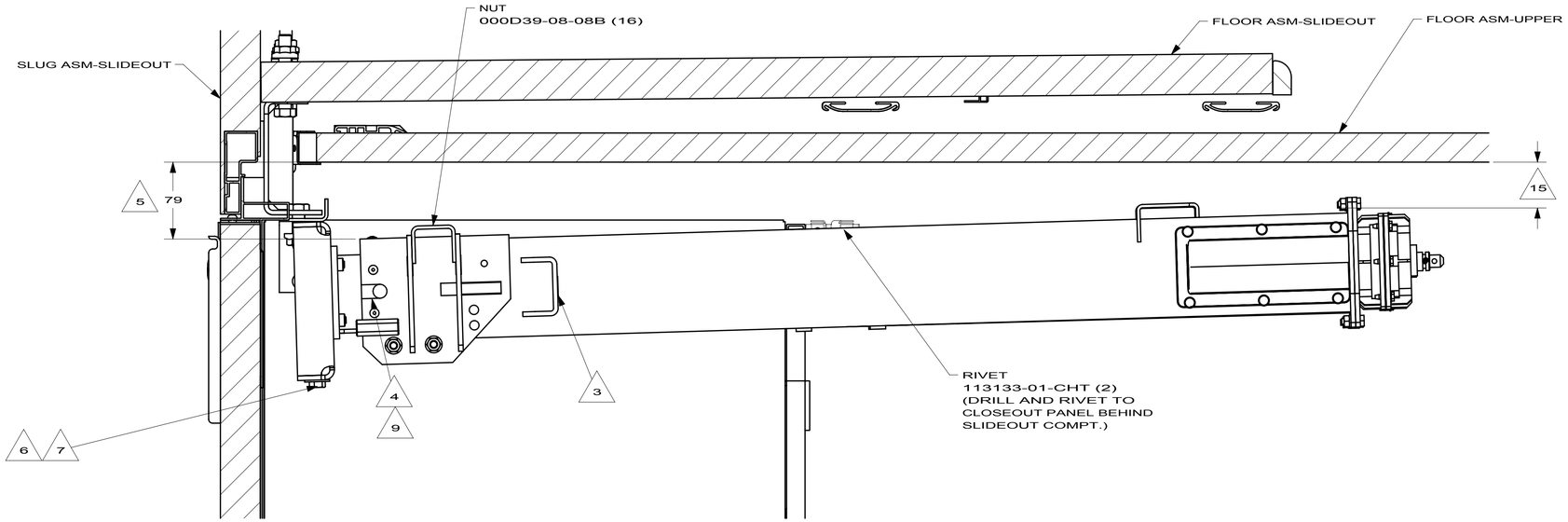

SECTION DA-DA

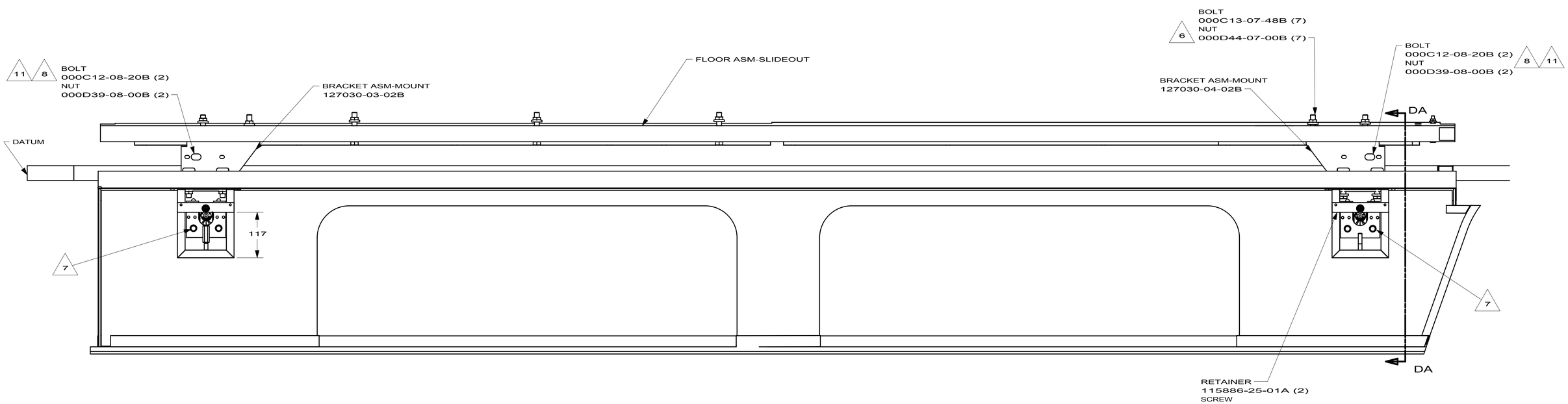

10 331C

SLIDEOUT COMPL

3/12/2010

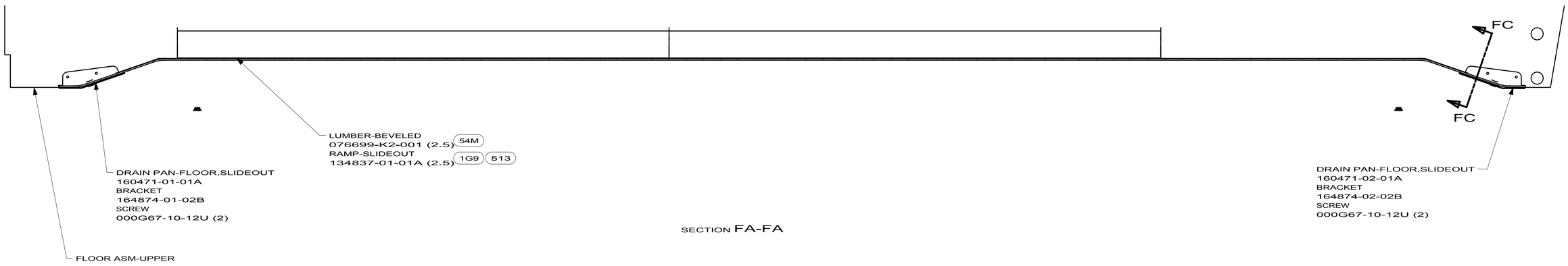

SECTION FA-FA

10 331C

SLIDEOUT COMPL

5 169143

3/12/2010

DWG NO	ROOM ASM-SLIDEOUT	
169144-01	169144-11-XXX	64T
169144-02	169144-12-XXX	64V
169144-03	169144-13-XXX	64T 65G 094
169144-04	169144-14-XXX	64V 65G 094
169144-05	169144-15-XXX	64T 13Y 094
169144-06	169144-16-XXX	64V 13Y 094

RELEASE	REV A	DATE	DWG NO 169144
REV	ZONE	REVISION RECORD	DATE	DFTR-ORIG

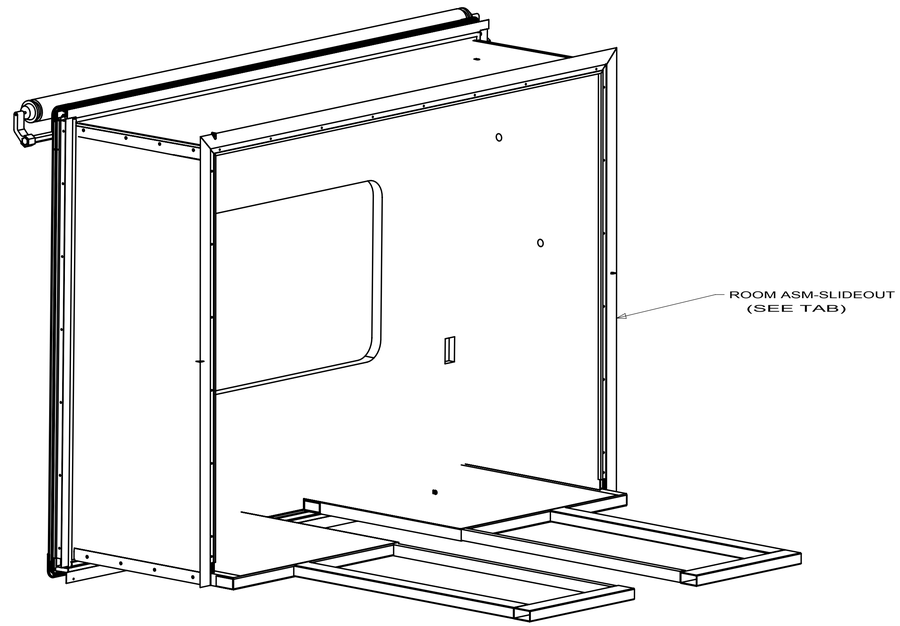

12. TORQUE ALL BOLTS PER ES0018 UNLESS OTHERWISE SPECIFIED. (SEE TABLE BELOW)

SIZE	TORQUE VALUE (FT-LBS)
1/4 - 20 (.250)	76 (IN-LBS)
5/16 - 18 (.3125)	13 (FT-LBS)
3/8 - 16 (.375)	23 (FT-LBS)
7/16 - 14 (.4375)	37 (FT-LBS)
1/2 - 13 (.500)	57 (FT-LBS)

11. USE POLY-CLEAR 47034-07-000 AND ATTACH IT USING WASHER 44533-01-000 TO PROTECT THE SLIDEOUT FLOOR.

10. POSITION SEAL FLUSH WITH LOWER TRIM AND TIGHT AGAINST INNER TRIM.

9. SCREWS CANNOT BE REUSED. ANY TIME A SCREW IS REMOVED IT MUST BE DISCARDED AND REPLACED WITH A NEW SCREW TO INSURE THE THREADS SEAL.

8. USE SCREW G39-08-08S TO HOLD EACH END OF TRIM.

7. SEE SEALANT MANUAL.

6. LOOSEN BOLTS TO ALLOW ROOM TO MOVE SIDE TO SIDE ON THE MOUNTING BRACKETS UNTIL IT IS CENTERED IN THE OPENING. TIGHTEN AFTER ALL ADJUSTMENTS ARE COMPLETE.

5. ADJUST BOLT TO MOVE ROOM UP OR DOWN TO BE CENTERED IN THE SIDEWALL OPENING. TIGHTEN AFTER ALL ADJUSTMENTS ARE COMPLETE.

4. THIS IS A NOMINAL DIMENSION; THE PARTS SHOULD BE ADJUSTED AS REQUIRED FROM THERE.

3. THE RETRACTED LENGTH IS ADJUSTED UNTIL THE OUTSIDE TRIM OF THE ROOM SEALS AGAINST THE OUTSIDE OF THE SIDEWALL

2. THE EXTENDED LENGTH IS ADJUSTED UNTIL THE INSIDE TRIM OF THE ROOM SEALS AGAINST THE INSIDE OF THE SIDEWALL.

1. FOR ADDITIONAL INFORMATION SEE WIRE INSTALLATION FRONT END AND THE LEVELING JACK INSTALLATION DRAWINGS.

NOTES:

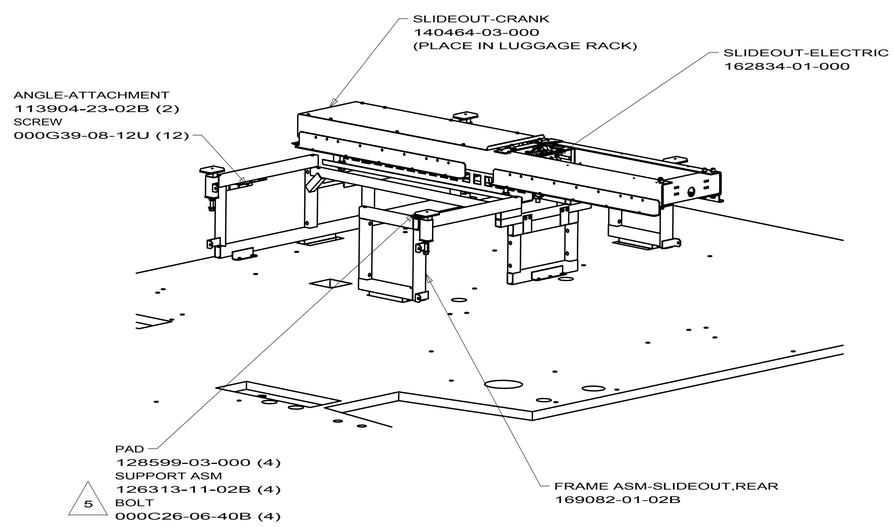

13Y WINDOWS-COACH-DUAL PANE
65G WINDOW COACH-SINGLE PANE
094 WINDOWS - SE-GI
64V SIDEWALL-PREMIUM HIGH GLOSS
64T SIDEWALLS-HIGH GLOSS

WINNEBAGO INDUSTRIES

COPYRIGHT 2009
WINNEBAGO
INDUSTRIES, INC.

DFTR	ORIG. DATE
CHKR	ALL DIMENSIONS ARE IN MILLIMETERS
P.E.	
M.E.	FIRST USED 10 331C
DSNR	

UNSPECIFIED TOLERANCES ARE:
WHOLE DIM (X) : 3
ONE-PLACE (X.X) :
TWO-PLACE (X.XX) :
ANGLE :

MATERIAL:

THIRD ANGLE PROJECTION

DO NOT SCALE DRAWING

TITLE: SLIDEOUT COMPL-REAR,RH

SHEET 1 OF 4 | PART NO. 169144 | REV

REF:

1

10/2/2009

DWG NO 169144

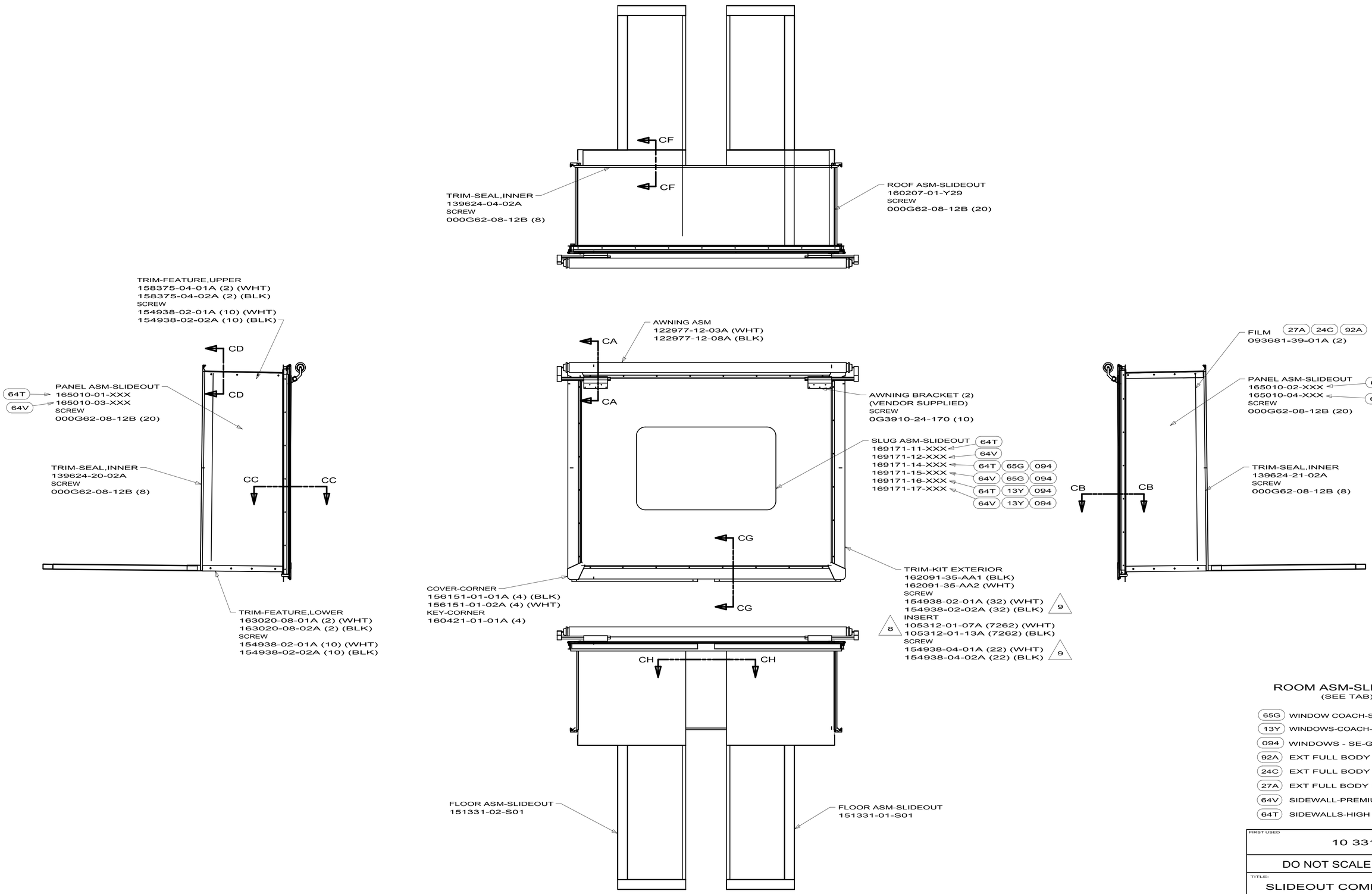

ROOM ASM-SLIDEOUT
(SEE TAB)

65G	WINDOW COACH-SINGLE PANE
13Y	WINDOWS-COACH-DUAL PANE
094	WINDOWS - SE-GI
92A	EXT FULL BODY PAINT PKG # 2
24C	EXT FULL BODY PAINT PKG # 3
27A	EXT FULL BODY PAINT PKG #1
64V	SIDEWALL-PREMIUM HIGH GLOSS
64T	SIDEWALLS-HIGH GLOSS

FIRST USED
10 331C

DO NOT SCALE DRAWING

TITLE:
SLIDEOUT COMPL-REAR,RH

SHEET 2 | PART NO 169144 | REV

10/2/2009

DWG NO 169144

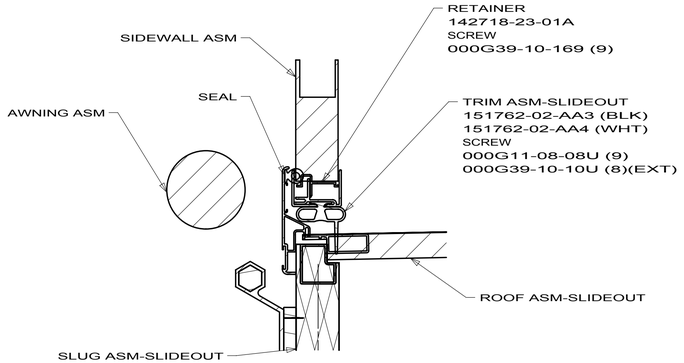

CA-CA

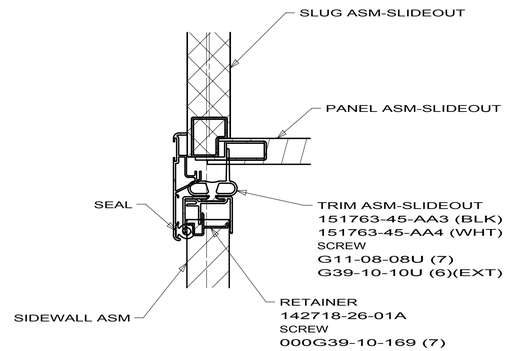

SECTION CB-CB

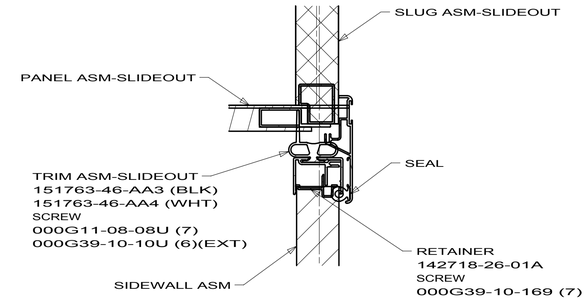

SECTION CC-CC

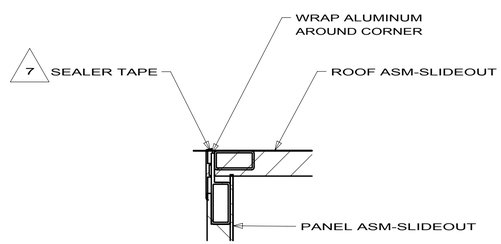

SECTION CD-CD

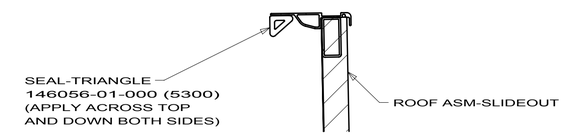

SECTION CF-CF

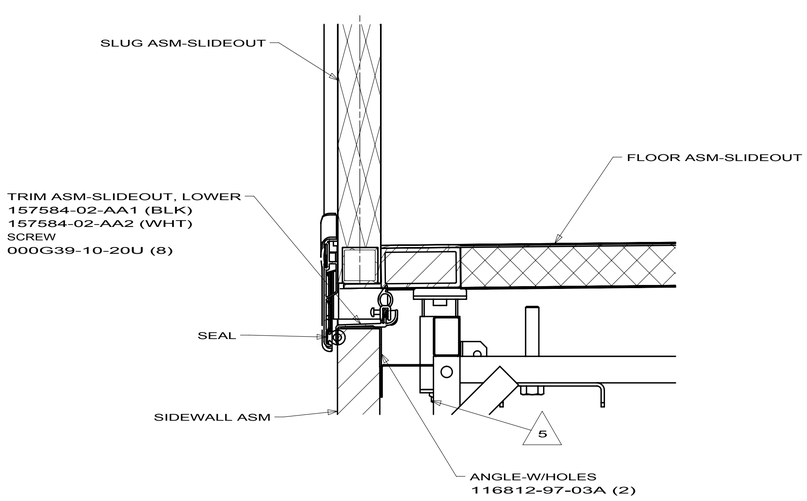

SECTION CG-CG

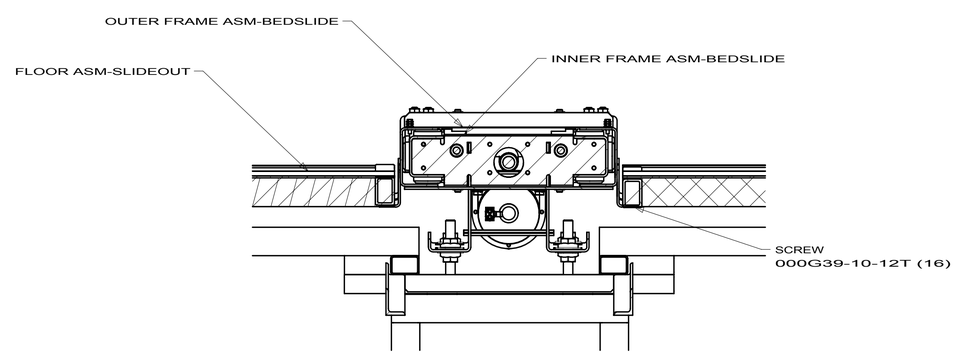

SECTION CH-CH

FIRST USED	10 331C
DO NOT SCALE DRAWING	
TITLE:	SLIDEOUT COMPL-REAR,RH
SHEET 3	PART NO 169144 REV

10/2/2009

DWG NO 169144

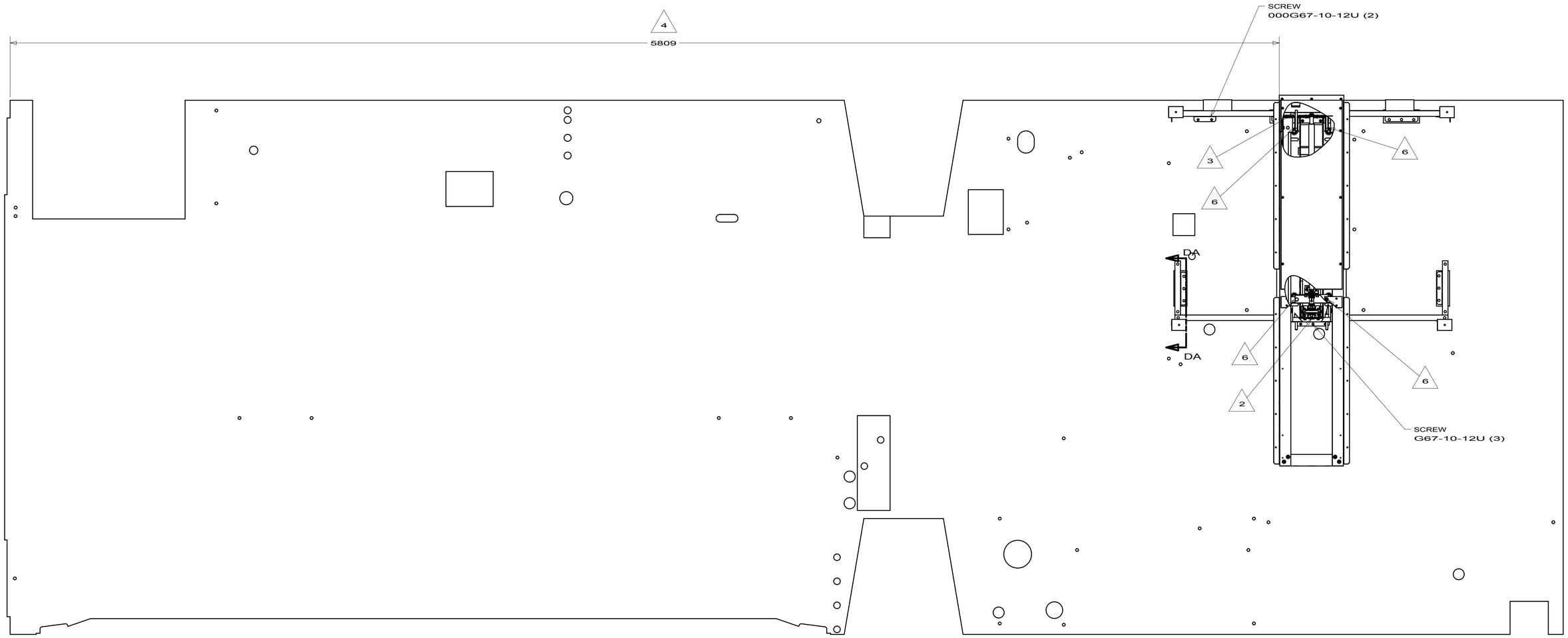

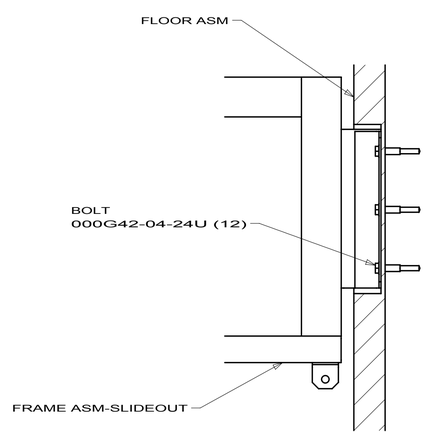

SECTION DA-DA

FIRST USED	10 331C
DO NOT SCALE DRAWING	
TITLE:	SLIDEOUT COMPL-REAR,RH
SHEET 4	PART NO 169144 REV

10/2/2009

DWG NO 140962

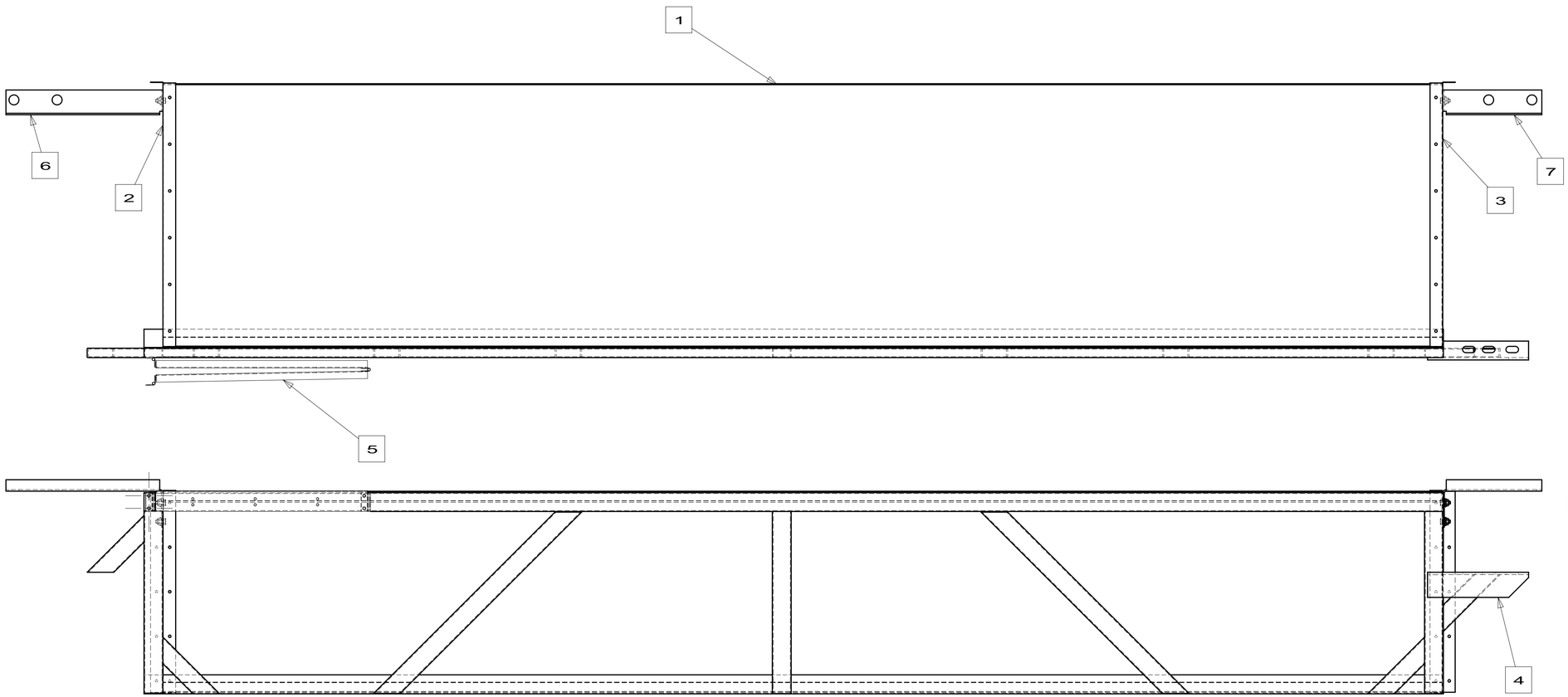

331C

ITEM	PART NUMBER	DESCRIPTION	QTY
9	000C120410U	BOLT	4
8	000D390400U	NUT	4
7	12782804CHT	BRACKET-SLI	1
6	12782806CHT	BRACKET-SLI	1
5	12659101CHT	CARRIER ASM	1
4	13555425XXX	SUPPORT ASM	1
3	13555510CHT	PANEL-COMPA	1
2	13555511CHT	PANEL-COMPA	1
1	14096104000	PANEL ASM-F	1

FIRST USED: 06 331C

DO NOT SCALE DRAWING

TITLE: COMPARTMENT ASM-SLIDEOUT

SHEET 1 | PART NO 140962 | REV

DWG NO 150125

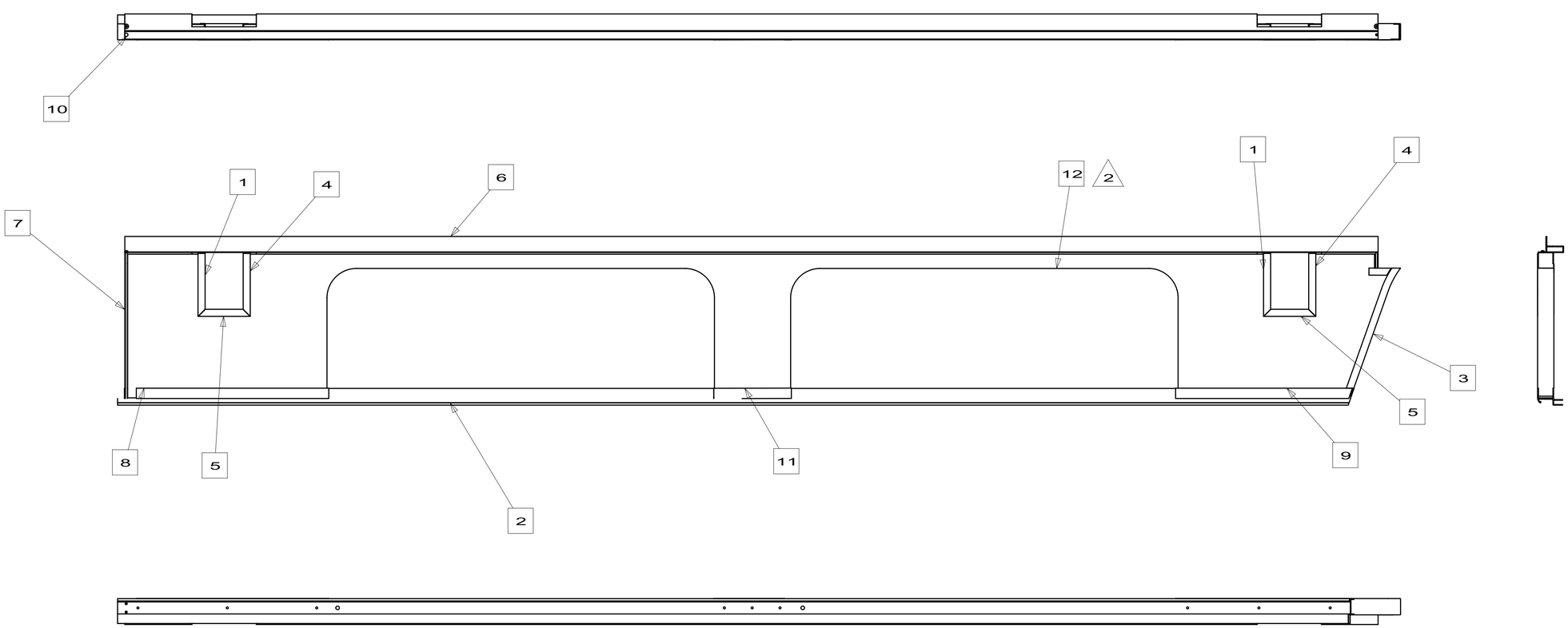

150125-09

64V SIDEWALL-PREMIUM HIGH GLOSS

ITEM	PART NUMBER	DESCRIPTION	QTY
12	16917214XXX	PANEL ASM-SI	1
11	148759C9CHT	TRIM-SIDEWAL	1
10	000G111012B	SCREW 10-16X	1
9	14875958CHT	TRIM-SIDEWAL	1
8	14875956CHT	TRIM-SIDEWAL	1
7	13756101CHT	ANGLE-W/HOLE	1
6	14097607CHT	JAMB-UPPER	1
5	13797008CHT	TRIM-SIDEWAL	2
4	13797006CHT	TRIM-SIDEWAL	2
3	12785202XXX	TRIM ASM-WHE	1
2	14098103CHT	JAMB-LOWER	1
1	13797009CHT	TRIM-SIDEWAL	2

FIRST USED 10 331C

DO NOT SCALE DRAWING

TITLE: PANEL ASM-SEAL PLANE

SHEET 1 | PART NO 150125 | REV

10/14/2009

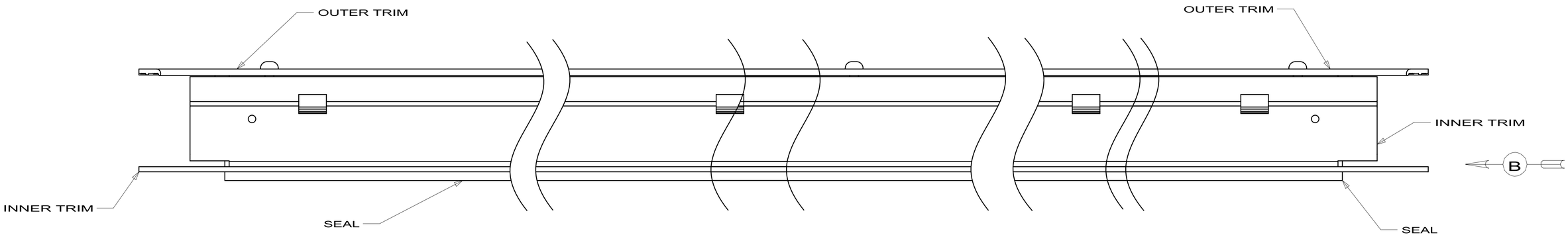

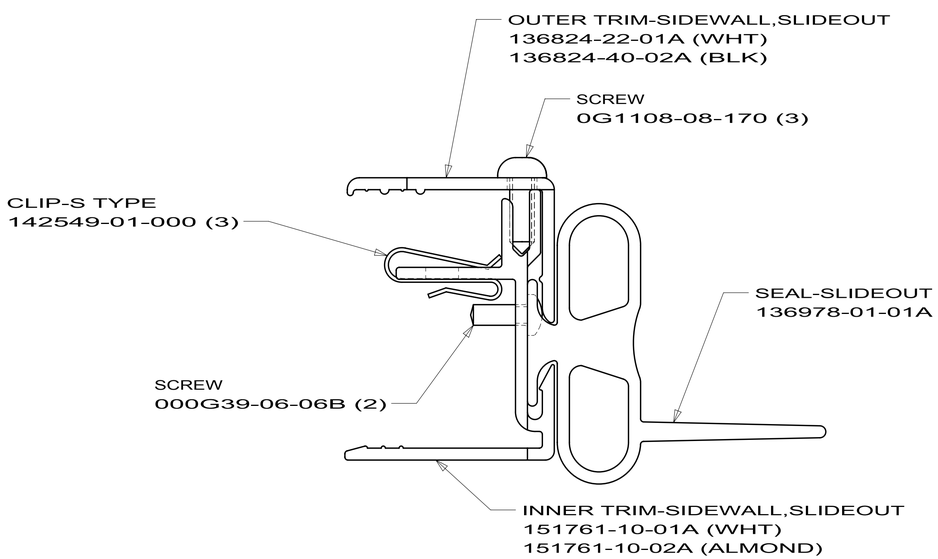

VIEW B

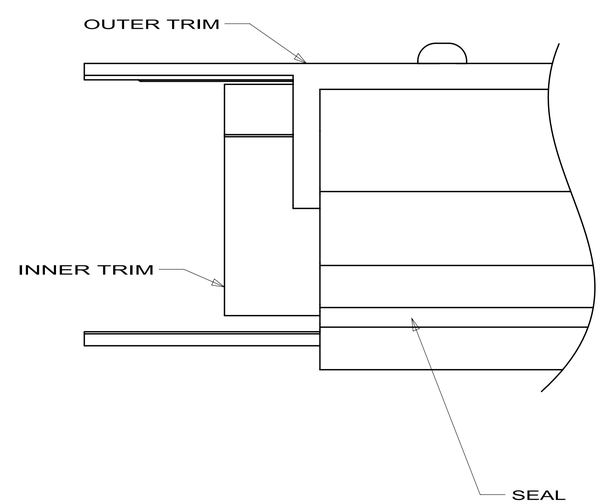

FABWELL SDW

TRIM ASM-SLIDEOUT,TOP

1 151762

4/27/2010

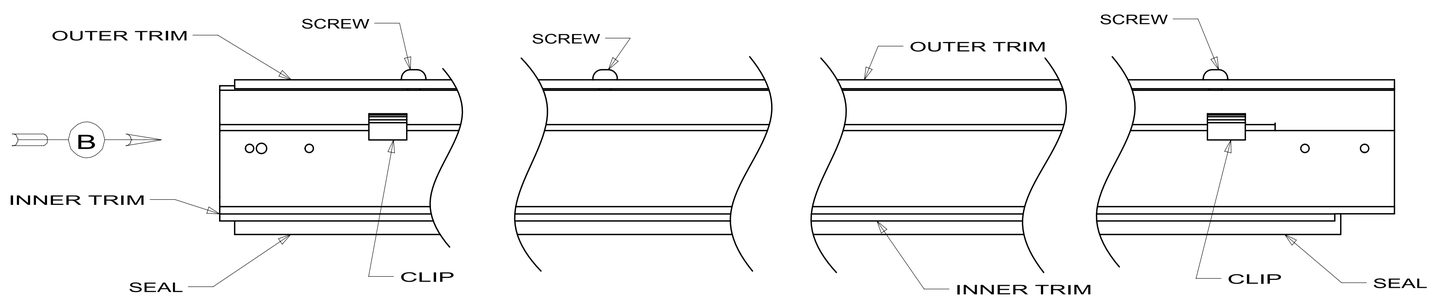

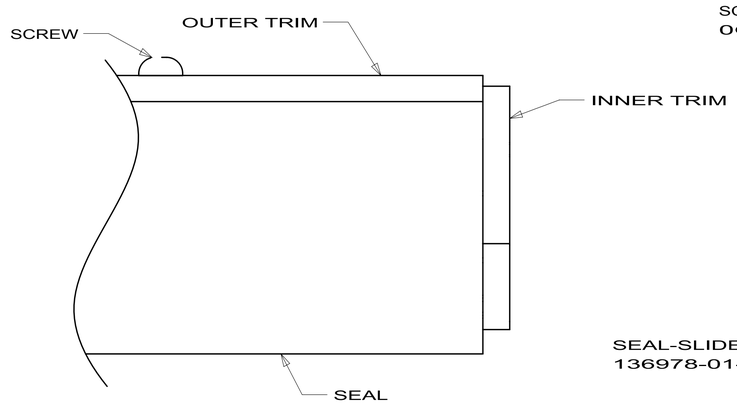

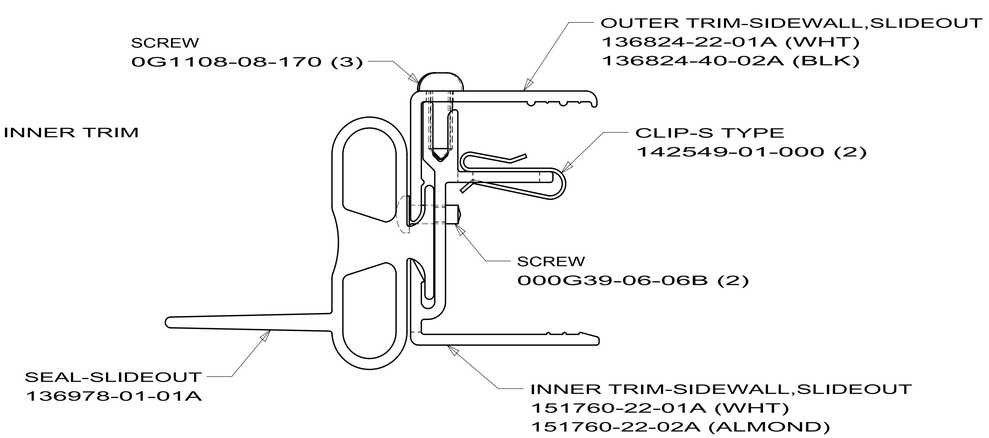

VIEW B

FABWELL SDW

TRIM ASM-SLIDEOUT,SIDE

1 2 151763

4/27/2010

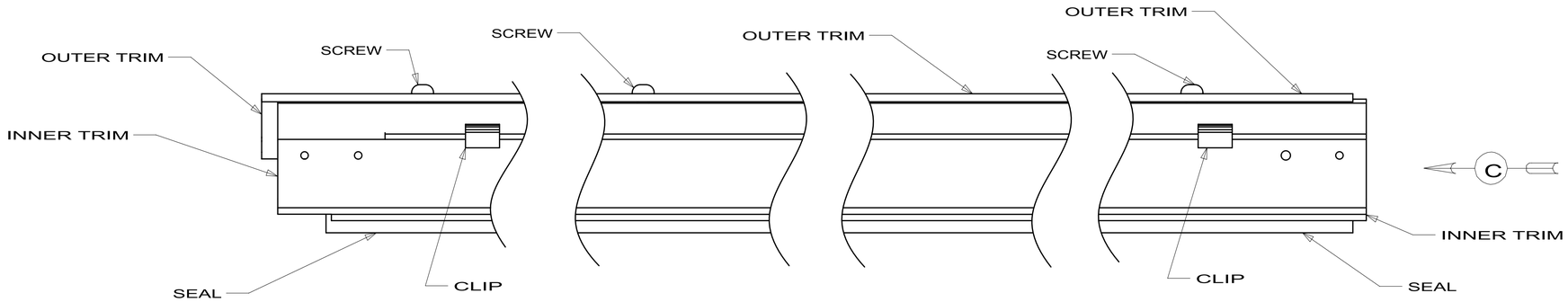

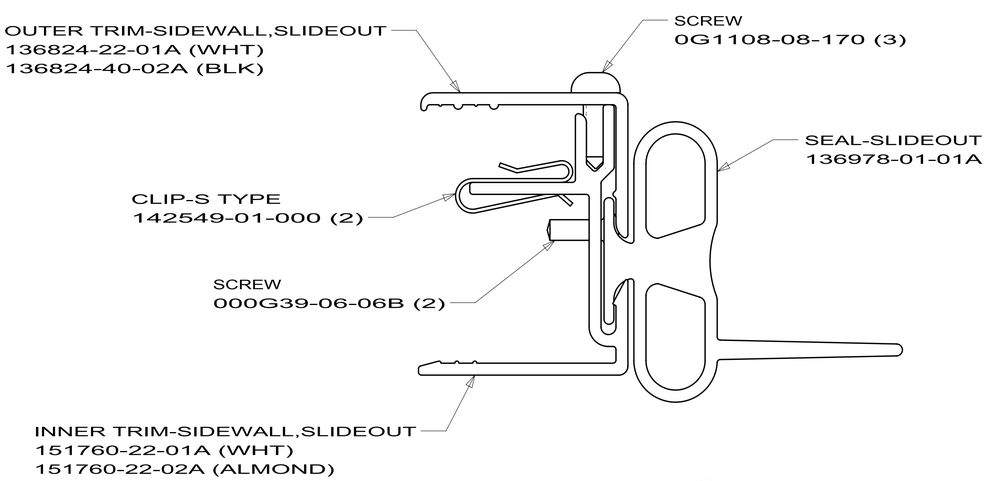

VIEW C

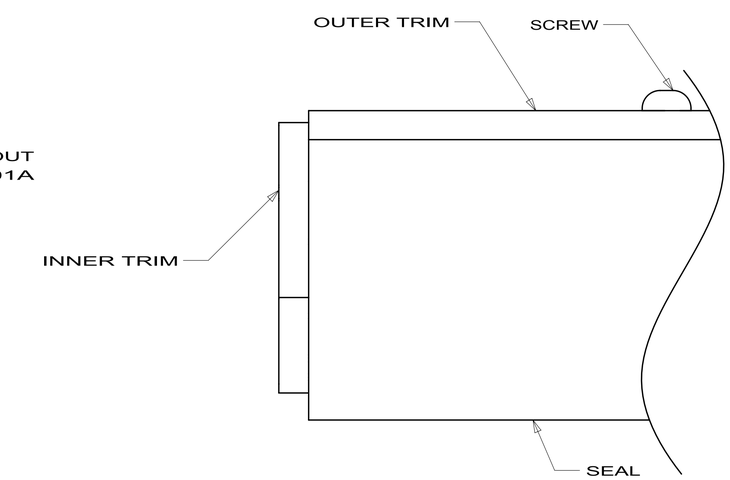

FABWELL SDW

TRIM ASM-SLIDEOUT,SIDE

2 151763

4/27/2010

DWG NO 159417

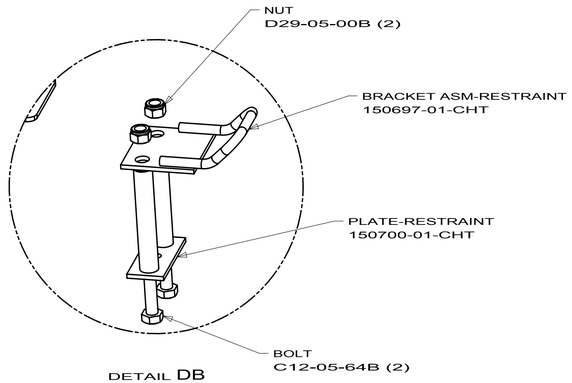

DETAIL DB

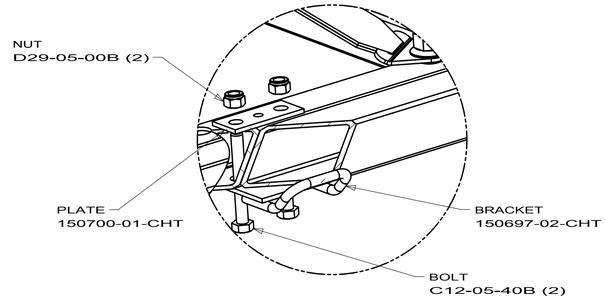

DETAIL VBC

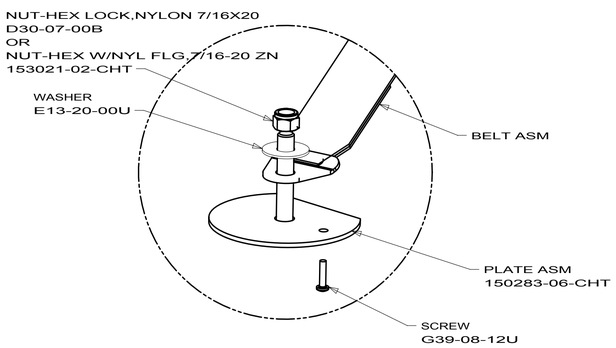

DETAIL VBD

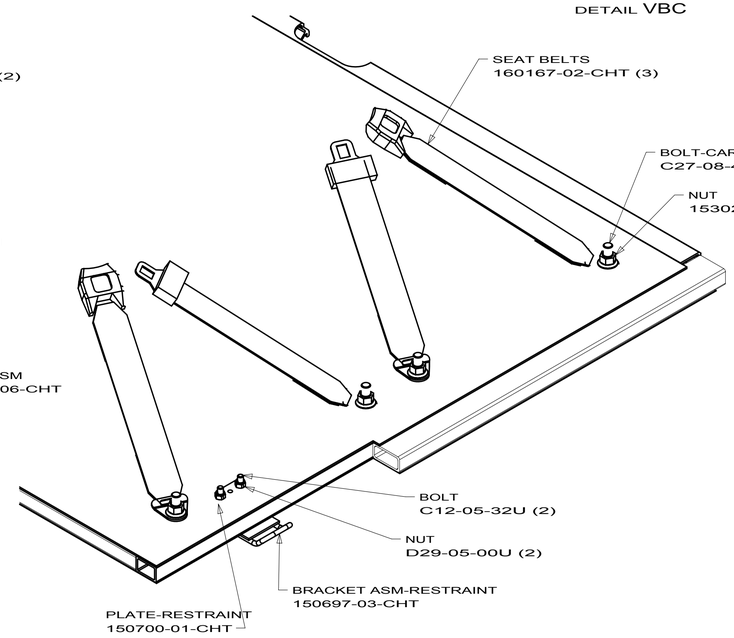

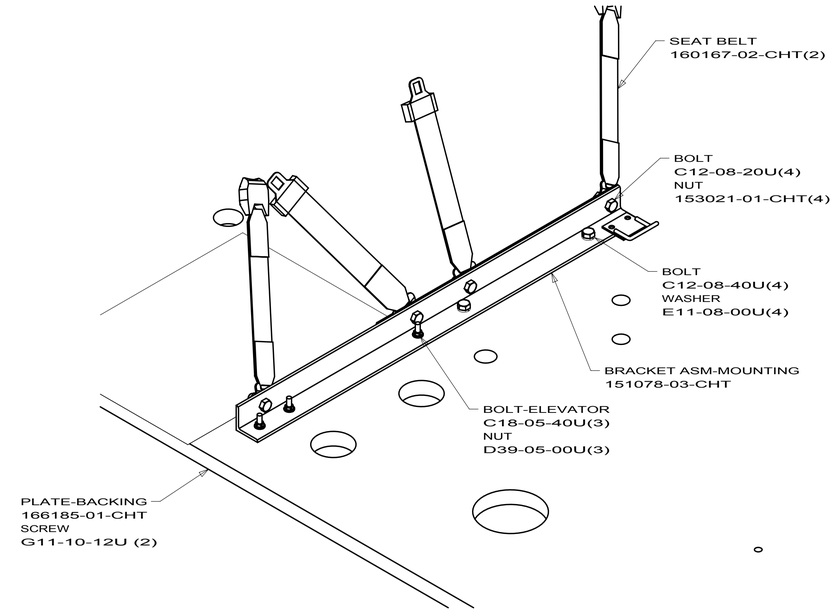

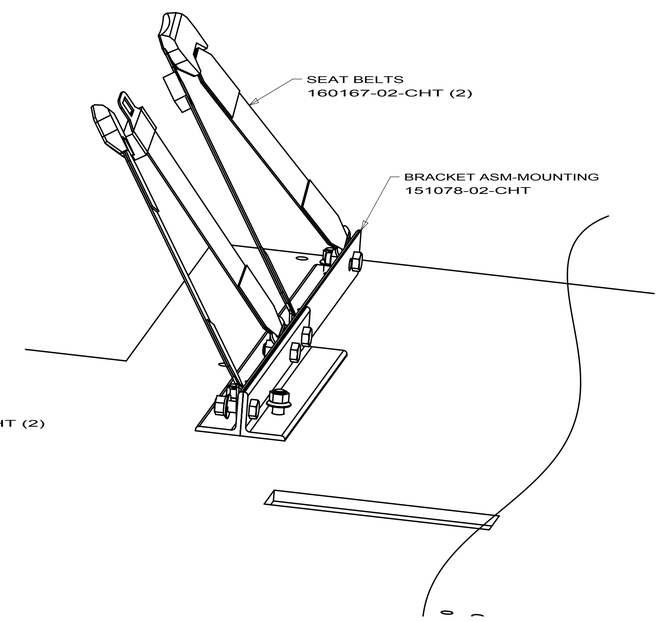

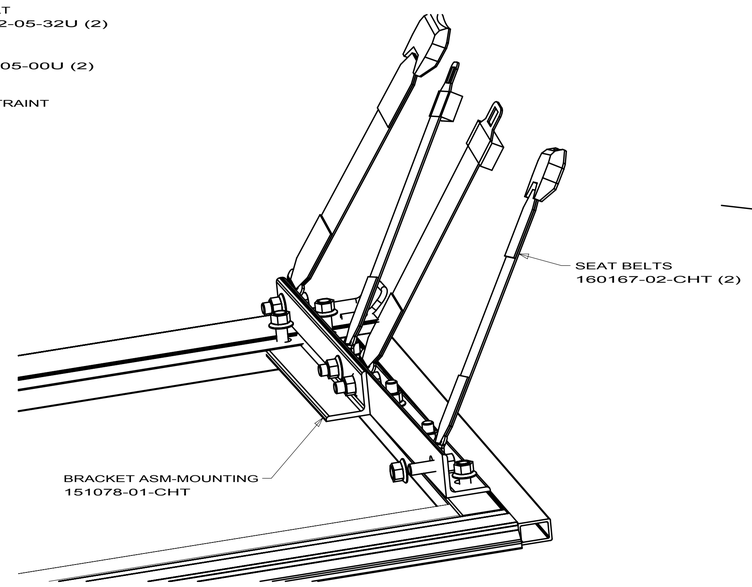

SEAT BELT
160167-01-CHT 2 X 102" BLACK
160167-02-CHT 2 X 90" BLACK

FIRST USED	07 MOTORHOMES
	DO NOT SCALE DRAWING
TITLE:	SEAT BELT INSTL
SHEET 1	PART NO 159417 REV

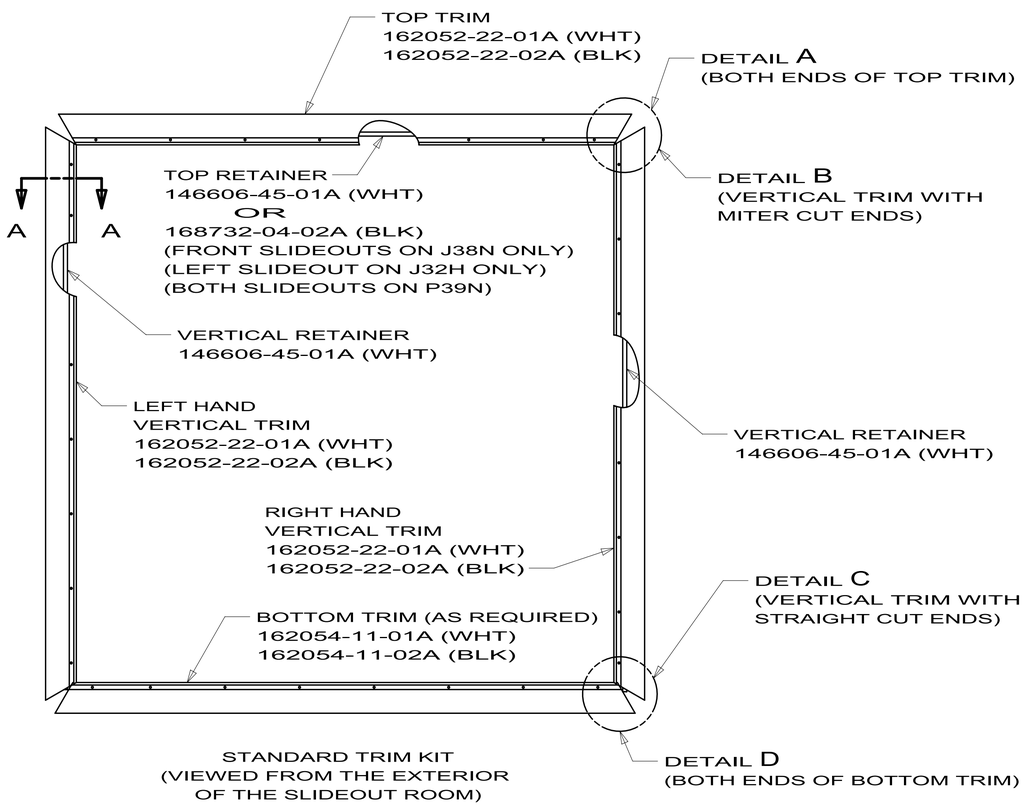

STANDARD TRIM KIT
(VIEWED FROM THE EXTERIOR
OF THE SLIDEOUT ROOM)

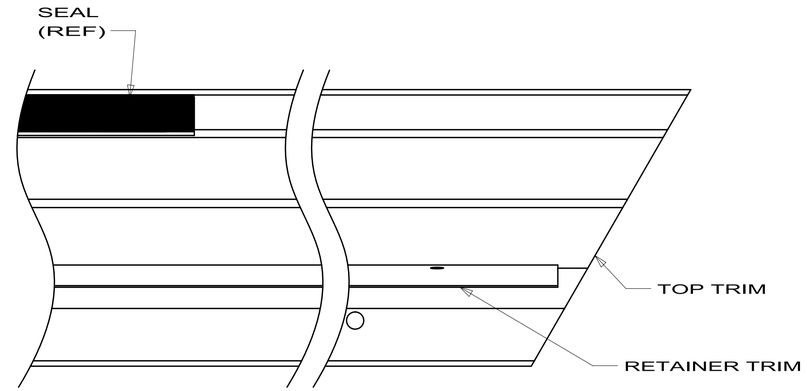

DETAIL A
(TOP TRIM)
(VIEWED FROM THE BACKSIDE OF THE TRIM)

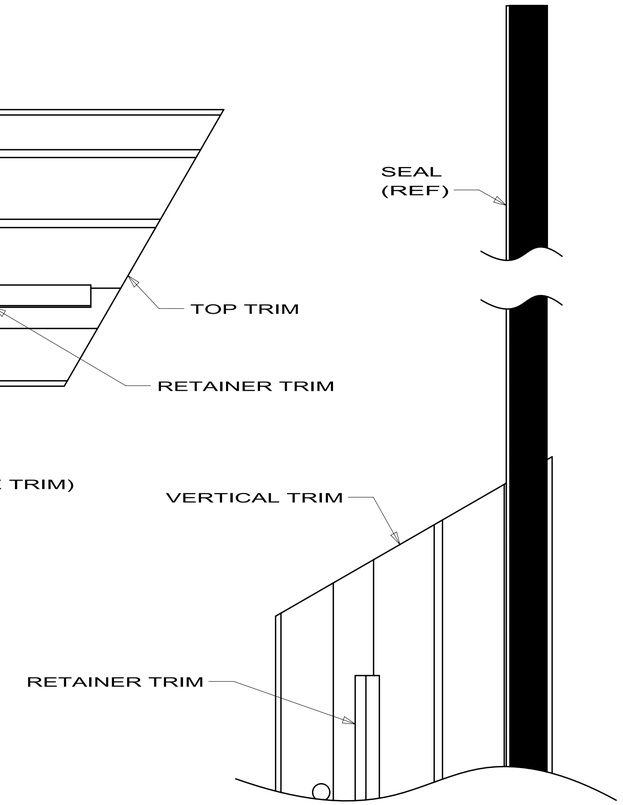

DETAIL B
(ALL MITER CUT VERTICAL TRIM)
(VIEWED FROM THE BACKSIDE OF THE TRIM)

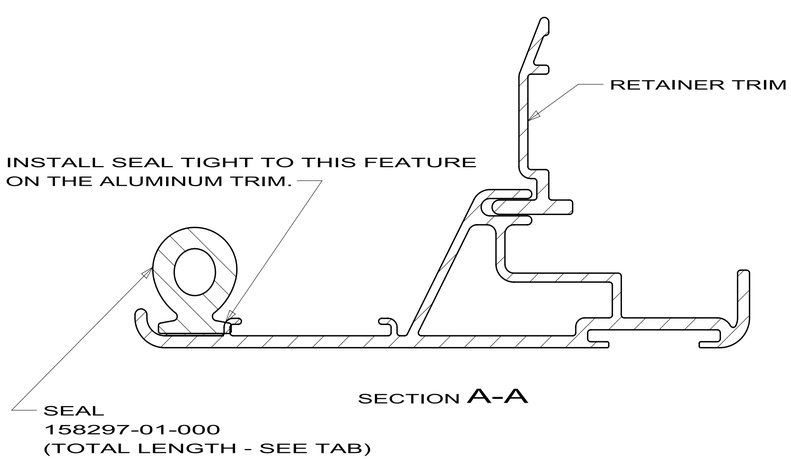

SECTION A-A

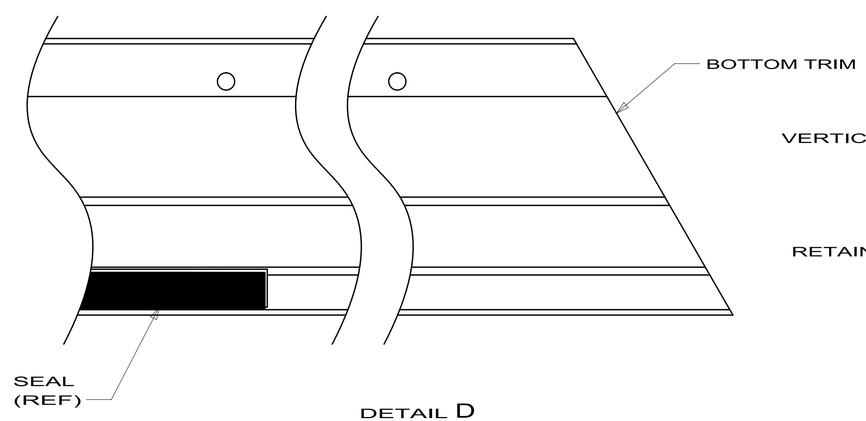

DETAIL D
(BOTTOM TRIM)
VIEWED FROM THE BACKSIDE OF THE TRIM)

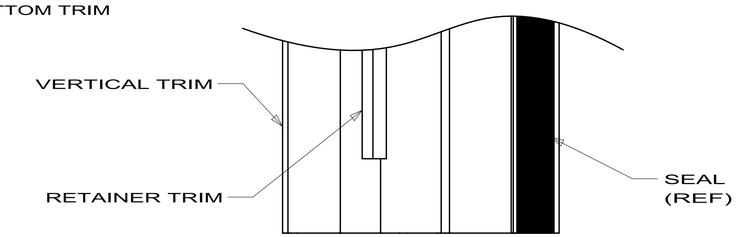

DETAIL C
(ALL STRAIGHT CUT VERTICAL TRIM)
(VIEWED FROM THE BACKSIDE OF THE TRIM)

2007 MOTORHOMES

TRIM KIT-EXTERIOR,SLIDEOUT

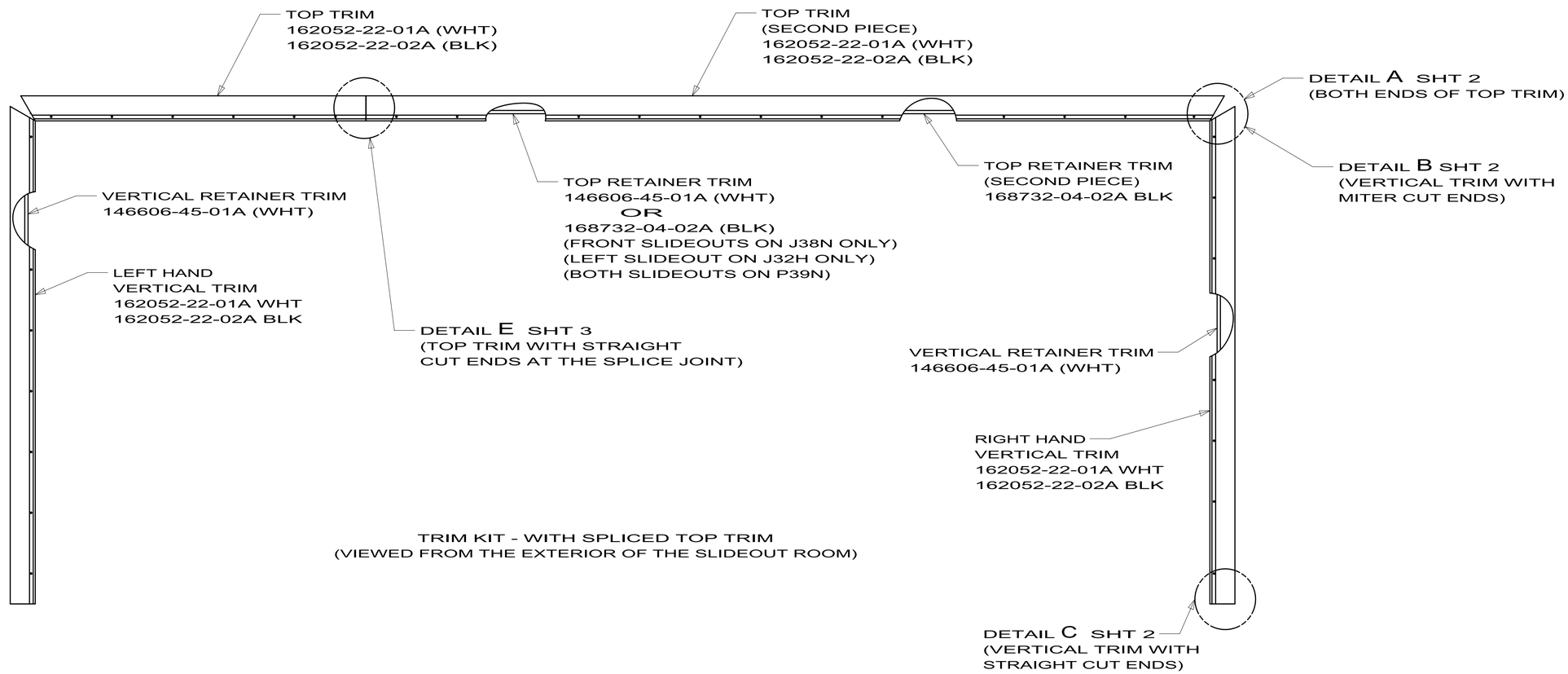

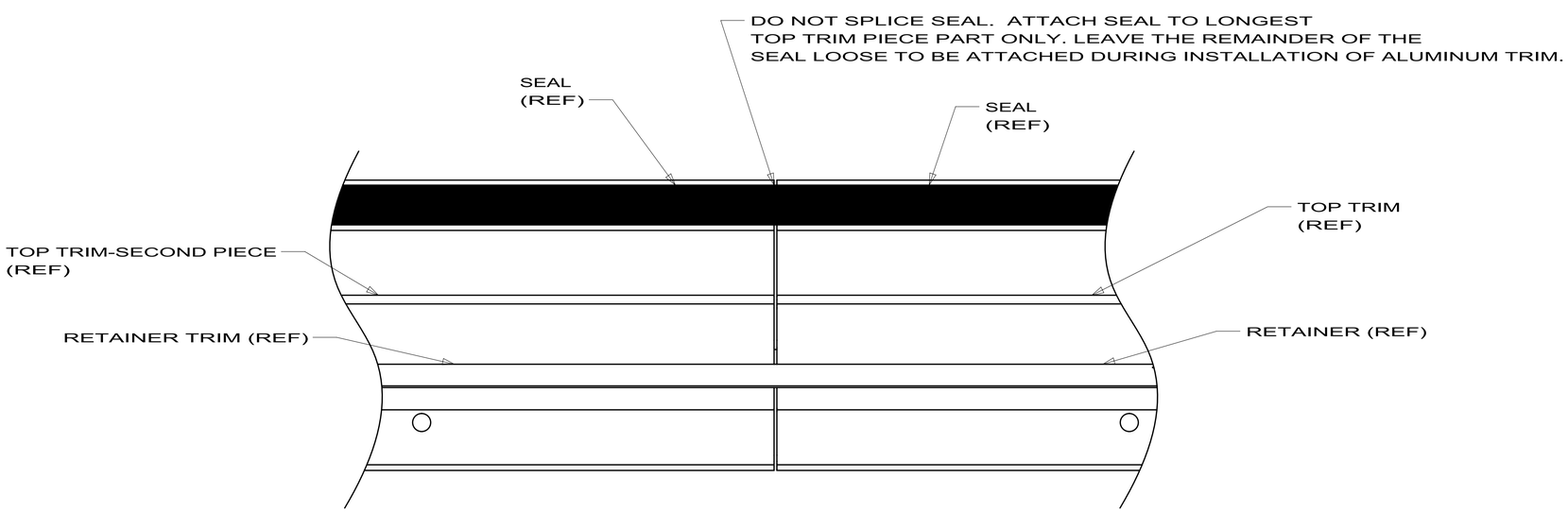

DETAIL E

(SPLICE IN TOP TRIM.)
(SHOWN FROM THE BACKSIDE OF TRIM.)

162495-01-01A, 162495-02-01A

KEY	PART NUMBER	U/M	DESCRIPTION	VENDOR NO.
	162495-01-700	EA	BUTTON-DBL. PLAS. SNAP	DP130

COPYRIGHT © 2009 WINNEBAGO INDUSTRIES INC.

KEY	PART NUMBER	U/M	DESCRIPTION	VENDOR NO.
	130294-04-700	EA	SCREW - 5/16"-18 X 1 1/2"	1202060
	131281-01-704	EA	HAIRPIN/COTTER - 3/8" SPRING	1213460
	131682-01-700	EA	ROLLER - (BEARING)	1912040
	138173-01-701	EA	POP RIVET - SS 3/16"X1/4"	1214630
	138173-01-707	EA	WEAR PUCK - PLASTIC F/DRIVE	1612523
	140457-01-701	EA	ROLLER - 1"OD X 1/2"ID	1614006
	140457-01-704	EA	SHAFT/AXLE - REAR ROLLER	7204523
	148875-01-702	EA	PIN/ROLL - 1/4" X 1"	1213701
	148875-01-703	EA	NUT/PLASTIC - 1" F/1/4" PIN	1612548
	148875-01-704	EA	END CARRIER - PLASTIC - 1"	1612549
	148875-01-705	EA	MOTOR/LINEAR - SLIDE ROOM	1820111
	148875-01-707	EA	END GUIDE F/SCREW - 1"	1820450
	148875-01-708	EA	TUBE - OUTER F/SLIDE RAM	7201200
	149165-01-701	EA	PIN/CLEVIS - 1/4" X 2 7/8"	1213204
	151027-01-700	EA	DRIVE SCREW 1" X 20"	1820402
	151027-01-701	EA	ROLL PIN - 3/16" X 1"	1213694
	151027-01-702	EA	CLEVIS PIN - 1/4" X 1 1/4"	1213202
	162827-01-700	EA	TUBE OUT STOP - ADJUSTABLE	7201198
	162832-01-700	EA	CLEVIS PIN - 5/16" X 2 1/4"	1213239
	162832-01-702	EA	NUT - 1" PLASTIC W/5/16" PIN	1612554

COPYRIGHT © 2009 WINNEBAGO INDUSTRIES INC.

162834-01-000

KEY	PART NUMBER	U/M	DESCRIPTION	VENDOR NO.
	131281-01-702	EA	PIN/CLEVIS-1/4" PLATED	1213190
	131281-01-704	EA	HAIRPIN/COTTER - 3/8" SPRING	1213460
	138173-01-701	EA	POP RIVET - SS 3/16"X1/4"	1214630
	138173-01-707	EA	WEAR PUCK - PLASTIC F/DRIVE	1612523
	148875-01-700	EA	PIN/COTTER - 3/32" X 1/2"	1213520
	148875-01-703	EA	NUT - PLASTIC - 1"	1612548
	148875-01-705	EA	MOTOR/LINEAR - SLIDE ROOM	1820111
	149165-01-700	EA	BEARING - 5/8" ID	1102015
	149165-01-701	EA	PIN/CLEVIS - 1/4" X 2 7/8"	1213204
	149165-01-703	EA	SEAL/RUBBER - INNER FRAME	1612007
	149165-01-704	EA	SEAL/LOWER ROOM - “Z”	1612009
	149165-01-705	EA	DRIVE/WORM SCREW - 30"	1820400

COPYRIGHT © 2009 WINNEBAGO INDUSTRIES INC.