DRAWING NO.	FEATURE
170104-01	----------
170104-11	1B1 12D
170104-15	265 12D

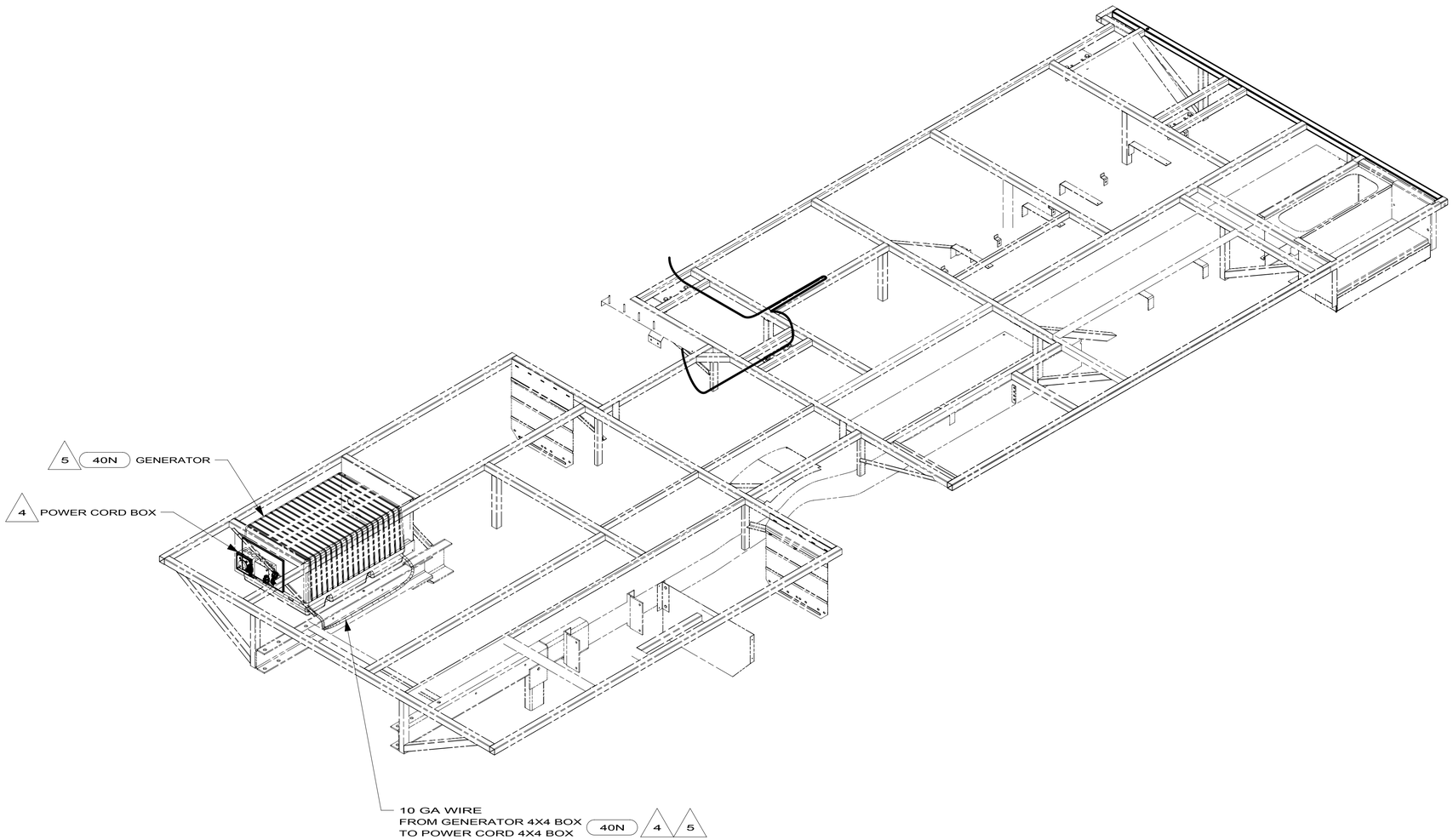

40N GEN-4.0KW-ONAN-GAS-MICROLITE

12D ELECTRICAL SYSTEM 30 AMP

265 CODES/STANDARDS-CSA/CMVSS

1B1 CODES/STANDARDS USA

1B1 265 12D

5 SEE GENERATOR INSTL FOR ADDITIONAL INFORMATION.

4 SEE LOAD CENTER INSTL FOR ADDITIONAL INFORMATION.

3. ALL GROUND WIRES TO BE COVERED WITH TUBING 008041-02-000.

2. ALL 110V WIRES ARE TO BE CLAMPED WITH CLAMP 010497-05-000 WITHIN 200MM OF OUTLET BOXES, USE SCREW 000G67-10-12B.

1. ALL WIRES TO BE SECURED WITH CLAMP 010495 OR 010497 OR WIRE TIE 008343 OR 108046 EVERY 600MM, USE SCREW 000G67-XX-XXX OR 000G56-XX-XXX AS APPROPRIATE FOR INSTALLATION.

NOTES:

10 331C

FOR ELECTRICAL TORQUE SPECIFICATIONS SEE DWG NO. 128783-01-000

X-X FOR ELECTRICAL CALLOUTS SEE DWG NO. 121339-01-000

WIRING INSTL-BODY,110V

1 3 170104

2/6/2010

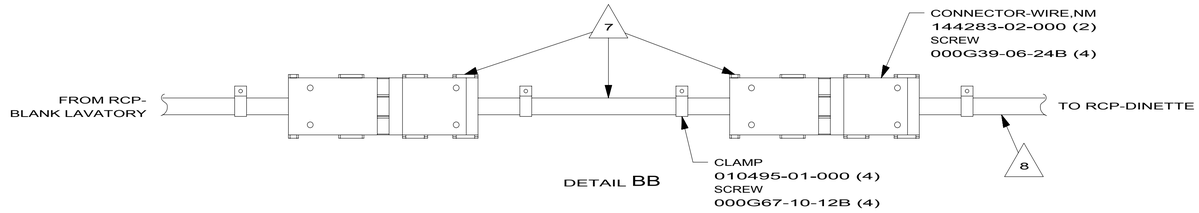

DETAIL BB

DETAIL BA

DETAIL BB

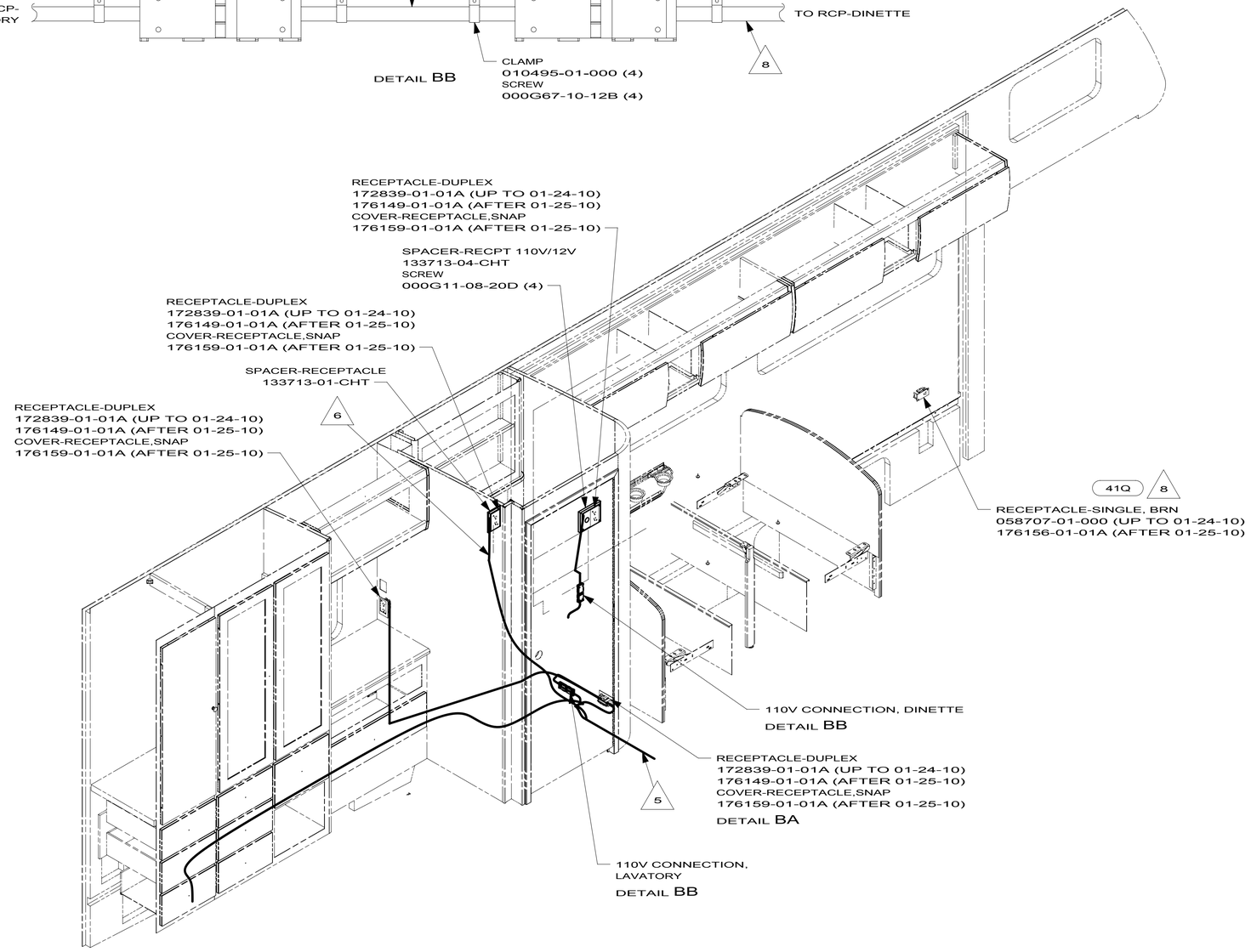

8 WIRE ROUTED IN SIDEWALL.

7 PART OF WIRE ASM-CHASSIS.

6 ROUTE WIRE THRU SIDEWALL.

5 ROUTE WIRE THRU FLOOR.

4. FOR MORE INFORMATION SEE WIRING DIAGRAM-BODY,110V.

3. ALL GROUND WIRE TO BE COVERED WITH TUBING 008041-02-000.

2. ALL 110V WIRE TO BE CLAMPED WITH CLAMP 010497-05-000 WITHIN 200MM OF OUTLET BOXES, USE SCREW 000G67-10-12B.

1. ALL WIRES TO BE SECURED WITH CLAMP 010495 OR 010497 OR WIRE TIE 008343 OR 108046 EVERY 600MM, USE SCREW 000G67-XX-XXX OR 000G56-XX-XXX AS APPROPRIATE FOR INSTALLATION.

NOTES:

FOR ELECTRICAL TORQUE SPECIFICATIONS SEE DWG NO. 128783-01-000

X-X

FOR ELECTRICAL CALLOUTS SEE DWG NO. 121339-01-000

41Q SOFA/SLEEPER-ULTRALEATHER HP

40N GEN-4.0KW-ONANGAS-MICROQUIET

12D ELECTRICAL SYSTEM 30 AMP

265 CODES/STANDARDS-CSA/CMVSS

1B1 CODES/STANDARDS USA

1B1 265 12D

10 331C

WIRING INSTL-BODY,110V

2 170104

2/6/2010

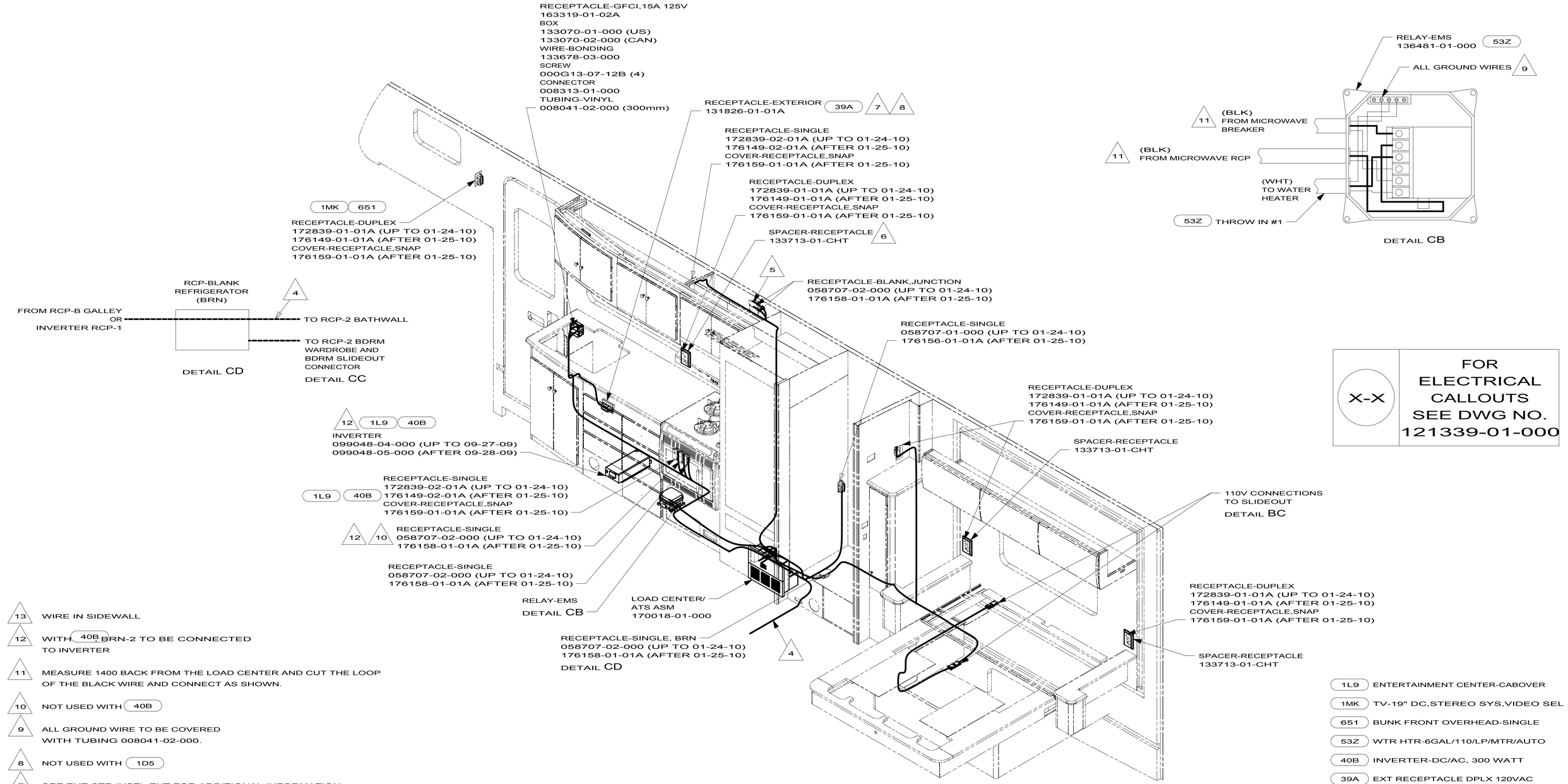

13 WIRE IN SIDEWALL

12 WITH 40B, BRN-2 TO BE CONNECTED TO INVERTER

11 MEASURE 1400 BACK FROM THE LOAD CENTER AND CUT THE LOOP OF THE BLACK WIRE AND CONNECT AS SHOWN.

10 NOT USED WITH 40B

9 ALL GROUND WIRE TO BE COVERED WITH TUBING 008041-02-000.

8 NOT USED WITH 1D5

7 SEE ENT CTR INSTL-EXT FOR ADDITIONAL INFORMATION.

6 WIRE ROUTED IN SIDEWALL.

5 WIRE IN ROOF.

4 ROUTE WIRE THRU FLOOR.

3. ALL GROUND WIRE TO BE COVERED WITH TUBING 008041-02-000.

2. ALL 110V WIRE TO BE CLAMPED WITH CLAMP 010497-05-000 WITHIN 200MM OF OUTLET BOXES, USE SCREW 000G67-10-12B.

1. ALL WIRES TO BE SECURED WITH CLAMP 010495 OR 010497 OR WIRE TIE 008343 OR 108046 EVERY 600MM, USE SCREW 000G67-XX-XXX OR 000G56-XX-XXX AS APPROPRIATE FOR INSTALLATION.

NOTES:

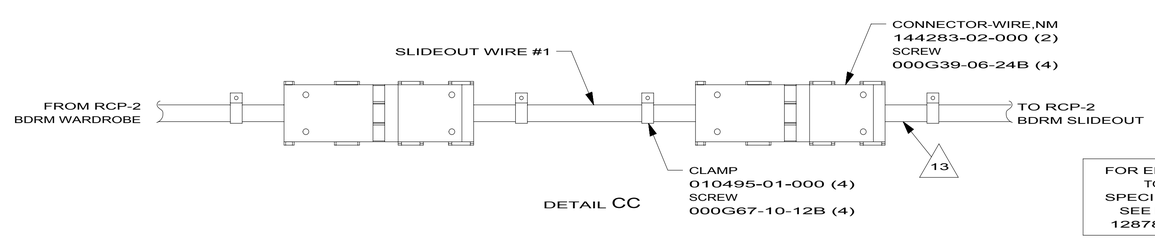

FOR ELECTRICAL TORQUE SPECIFICATIONS SEE DWG NO. 128783-01-000

1L9	ENTERTAINMENT CENTER-CABOVER
1MK	TV-19" DC,STEREO SYS,VIDEO SEL
651	BUNK FRONT OVERHEAD-SINGLE
53Z	WTR HTR-6GAL/110/LP/MTR/AUTO
40B	INVERTER-DC/AC, 300 WATT
39A	EXT RECEPTACLE DPLX 120VAC
1D5	ENTERTAINMENT CENTR/EXT W/CD
12D	ELECTRICAL SYSTEM 30 AMP
265	CODES/STANDARDS-CSA/CMVSS
1B1	CODES/STANDARDS USA

1B1 265 12D

10 331C

WIRING INSTL-BODY,110V

3 170104

083208-07-000

KEY	PART NUMBER	U/M	DESCRIPTION	VENDOR NO.
	083208-06-701	EA	CONVERTER ONLY (LOWER UNIT)	7345R

COPYRIGHT © 2009 WINNEBAGO INDUSTRIES INC.

		329B		331C	
GROUND	8-G	136145-02-015		136145-02-022	
WIRE ASM 110V US		170895-01-000		170199-01-000	
WIRE ASM 110V CA		170895-02-000		170199-02-000	
GENEARATOR CABLE ASM	UL	136137-01-025		×	40N
	CA	136138-01-025		×	40N
THROW-IN #1	UL	136135-09-040 53Z		136135-09-020 53Z	
	CA	136136-09-040 53Z		136136-09-020 53Z	
THROW-IN #2	UL	×		136131-03-025	
	CA	×		136134-03-025	
THROW-IN #3	UL	×		×	
	CA	×		×	
THROW-IN #4	UL	×		×	
	CA	×		×	
THROW-IN #5	UL	×		×	
	CA	×		×	
THROW-IN #6	UL	×		×	
	CA	×		×	
THROW-IN #7	UL	×		×	
	CA	×		×	
SLIDEOUT WIRE #1	UL	136151-03-017 △3		136151-03-020 △3	
	CA	136151-03-017 △3		136151-03-020 △3	
SLIDEOUT WIRE #2	UL	×		×	
	CA	×		×	
MAIN EXTENSION	UL	×		×	
	CA	×		×	
CONDUIT		×		×	

		224V	229T	231C	231N	231J	
GROUND	8-G	136145-02-016	136145-02-012	136145-02-022	136145-02-024	136145-02-021	
WIRE ASM 110V US		168359-01-000	168226-01-000	165476-01-000	169106-01-000	168597-01-000	
WIRE ASM 110V CA		168359-02-000	168226-02-000	165476-02-000	169106-02-000	168597-02-000	
GENEARATOR CABLE ASM	UL	8022-01-000 (4400)	×	×	×	×	40N
	CA	24743-01-000 (4400)	×	×	×	×	40N
CONDUIT		91234-01-000 (4000)	×	×	×	×	40N
THROW-IN #1	UL	136135-09-067 53B	136135-09-050 53B	136131-03-012 40B	136151-03-028 △3	136135-09-035 53B	
	CA	136136-09-067 53B	136136-09-050 53B	136131-03-012 40B	136151-03-028 △3	136136-09-035 53B	
THROW-IN #2	UL	136131-02-012 1MB	×	136131-04-015 40B	136131-05-018 △2	136131-03-003 △2	
	CA	136134-02-012 1MB	×	136134-04-015 40B	136134-05-018 △2	136134-03-003 △2	
THROW-IN #3	UL	×	×	136135-09-018 53B	136135-09-022 53B	136131-03-071 △2	
	CA	×	×	136136-09-018 53B	136136-09-022 53B	136134-03-071 △2	
THROW-IN #4	UL	×	×	×	136131-03-050 △2	×	
	CA	×	×	×	136134-03-050 △2	×	
MAIN EXTENSION	UL	×	8022-01-000 (3400)	8022-01-000 (4000)	8022-01-000 (4600)	8022-01-000 (3500)	
	CA	×	24743-01-000 (3400)	24743-01-000 (4000)	24743-01-000 (4600)	24743-01-000 (3500)	
CONDUIT		×	91234-01-000 (3000)	91234-01-000 (3600)	91234-01-000 (4200)	91234-01-000 (3200)	

		728B	730C
GROUND	8-G	136145-02-023	136145-02-015
WIRE ASM 110V US		171925-01-000	166007-01-000
WIRE ASM 110V CA		171925-02-000	166007-02-000
GENEARATOR CABLE ASM	UL	×	×
	CA	×	×
THROW IN #1	UL	136135-09-040 53B	136135-09-040 53B
	CA	136136-09-040 53B	136136-09-040 53B
THROW IN #2	UL	×	×
	CA	×	×
THROW IN #3	UL	×	136135-06-004 41Q
	CA	×	136136-06-004 41Q
THROW IN #4	UL	×	136131-03-003 △2
	CA	×	136134-03-003 △2
SLIDEOUT WIRE #1		136151-03-020 △3	136151-03-020 △3

41Q SOFA/SLEEPER-ULTRALEATHER HP
1L6 TV-15"DC,COLOR,LCD W/REMOTE
1MB CUSTOM FLOORPLAN - OFFICE
40B INVERTER-DC/AC, 300 WATT
53Z WTR HTR-6GAL/110/LP/MTR/AUTO
53B WTR HTR-6GAL ELECTRIC/LP GAS
23T DRAINAGE SYSTEM-HEATED
40N GEN-4.0KW-ONANGAS-MICROQUIET
1L6 TV-15"DC,COLOR,LCD W/REMOTE
265 CODES/STANDARDS-CSA/CMVSS
1B1 CODES/STANDARDS USA

1B1 265

10 200/300/700

△4 NOT USED WITH 1L6
△3 FOR CONNECTOR INSTALLATION SEE DETAIL BH.
△2 FOR CONNECTOR INSTALLATION SEE DETAIL BE.
1. ALL GROUND WIRES TO BE COVERED WITH TUBING 8041-02-000.

NOTES:

FOR ELECTRICAL TORQUE SPECIFICATIONS SEE DWG NO. 128783-01-000

X-X FOR ELECTRICAL CALLOUTS SEE DWG NO. 121339-01-000

LOAD CENTER/ATS ASM

1 3 170018

1/5/2010

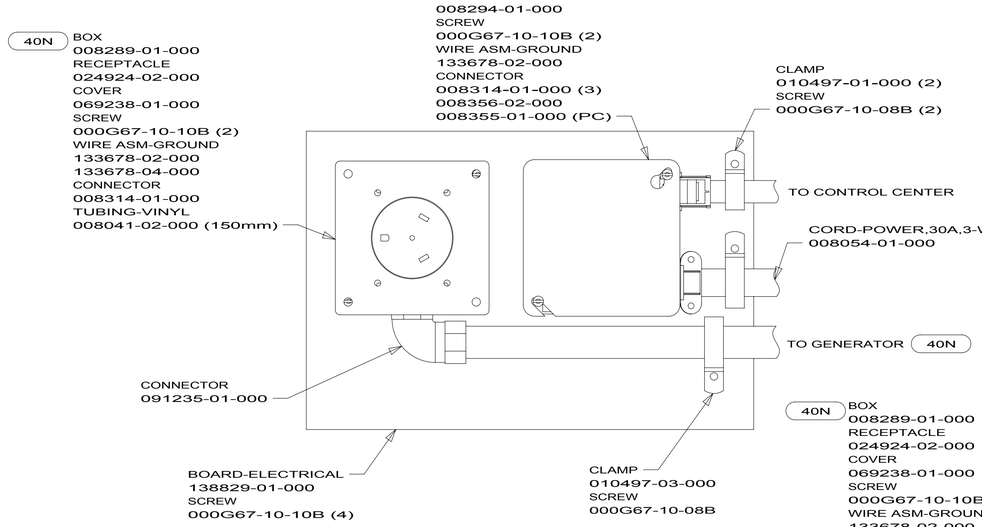

DETAIL BB 2

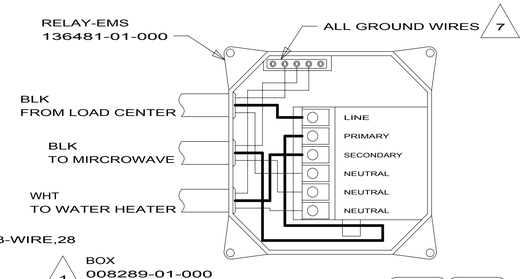

DETAIL BJ 53B 53Z

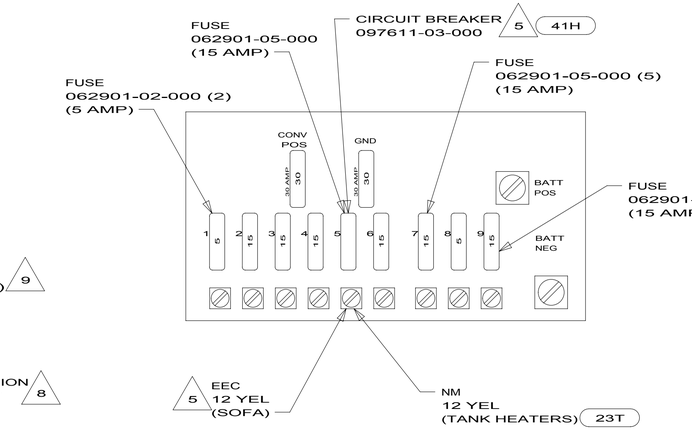

DETAIL BC

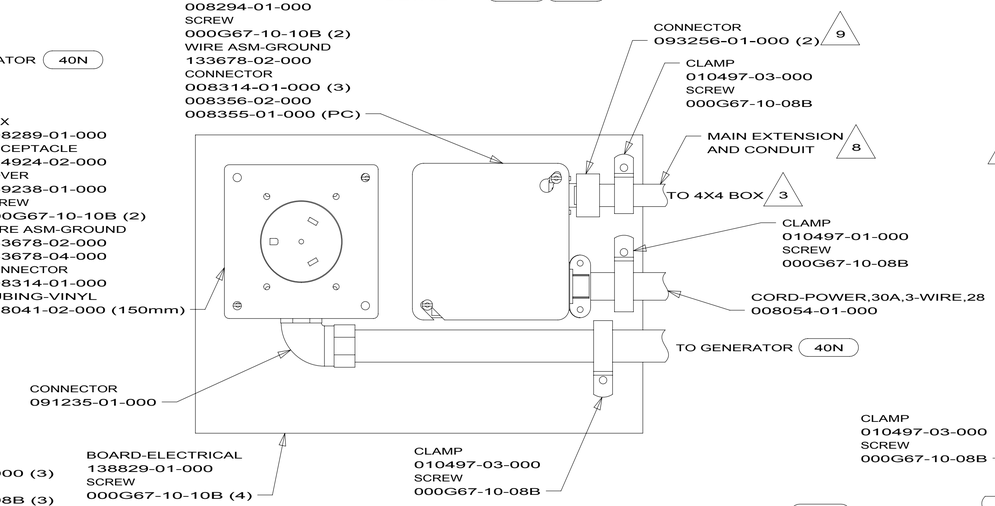

DETAIL BG 6

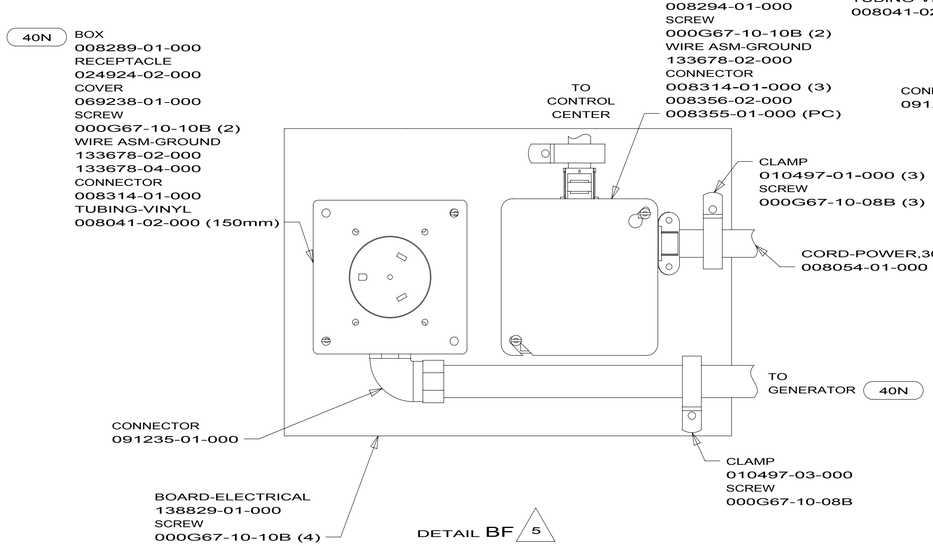

DETAIL BF 5

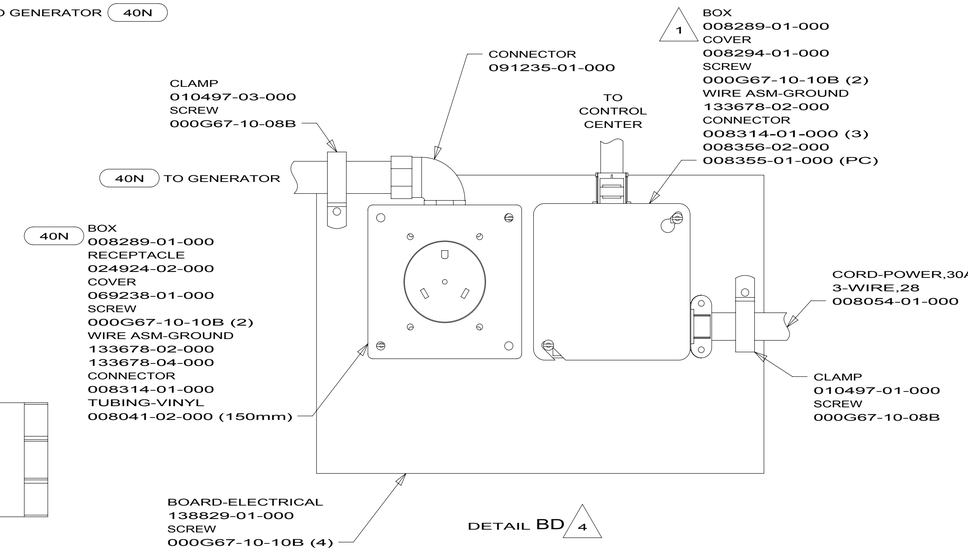

DETAIL BD 4

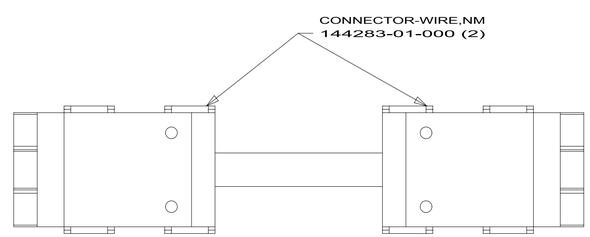

DETAIL BH

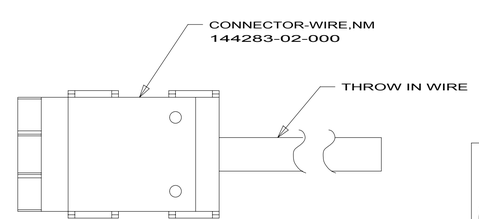

DETAIL BE

9 NOT USED ON 331C.

8 SEE SHT 1 FOR ADDITIONAL INFORMATION.

7 ALL GROUND WIRES TO BE COVERED WITH TUBING 8041-02-000.

6 USED WITH 231C, 229T, 331C, 231J, 231N, 330D.

5 USED WITH 730C.

4 USED WITH 329B, 728B.

3 SEE WIRING INSTL-BODY,110V FOR ADDITIONAL INFORMATION.

2 USED WITH 226A, 224V.

1 CONNECT BLK TO BLK, WHT TO WHT, AND GRNDS TO GRNDS.

NOTES:

FOR ELECTRICAL TORQUE SPECIFICATIONS SEE DWG NO. 128783-01-000

X-X	FOR ELECTRICAL CALLOUTS SEE DWG NO. 121339-01-000

41H	REST EASY, ULTRALEATHER
23T	DRAINAGE SYSTEM-HEATED
53Z	WTR HTR-6GAL/110/LP/MTR/AUTO
53B	WTR HTR-6GAL ELECTRIC/LP GAS
40N	GEN-4.0KW-ONAN-GAS-MICROLITE
265	CODES/STANDARDS-CSA/CMVSS
1B1	CODES/STANDARDS USA

1B1 265

10 200/300/700

LOAD CENTER/ATS ASM

2 170018

1/5/2010

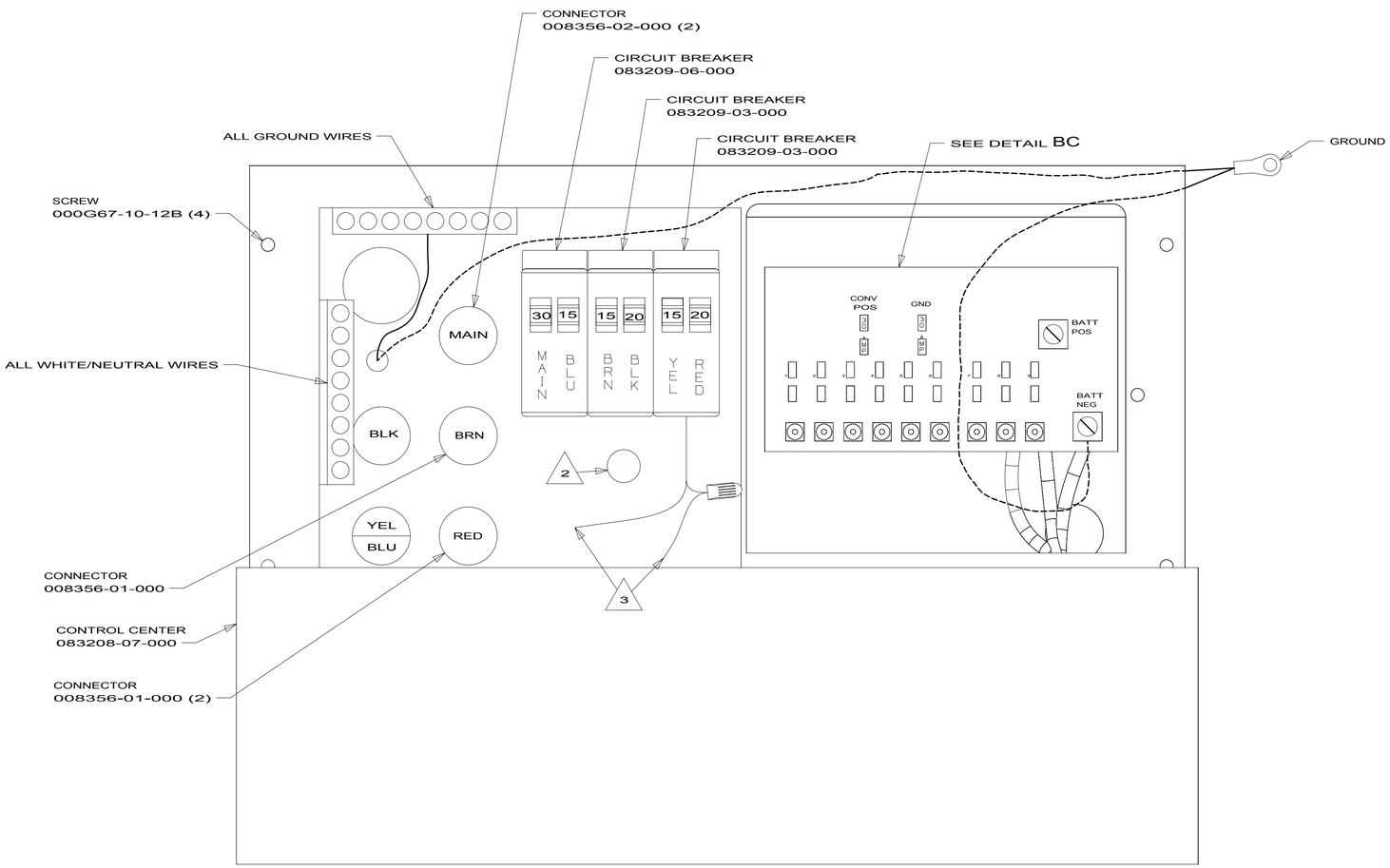

3 CONNECT CONVERTER POWER INTO YELLOW BREAKER AND USE SUPPLIED WIRE NUT TO CONNECT YELLOW CIRCUIT.

2 SECURE WIRES TO BACKSIDE OF LOAD CENTER WITH WIRE TIE 116673-01-000.

1. ALL GROUND WIRES TO BE COVERED WITH TUBING 008041-02-000.

NOTES:

FOR ELECTRICAL TORQUE SPECIFICATIONS SEE DWG NO. 128783-01-000	X-X	FOR ELECTRICAL CALLOUTS SEE DWG NO. 121339-01-000

265 CODES/STANDARDS-CSA/CMVSS

1B1 CODES/STANDARDS USA

1B1 265

10 200/300/700

LOAD CENTER/ATS ASM

3 170018

1/5/2010

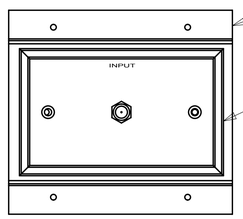

PLATE-ELECTRICAL
132862-04-02B
SCREW
000G11-08-12B (4)

WALLPLATE-COAX
149557-07-01A
SCREW
000G39-08-08B (2)

DETAIL AA

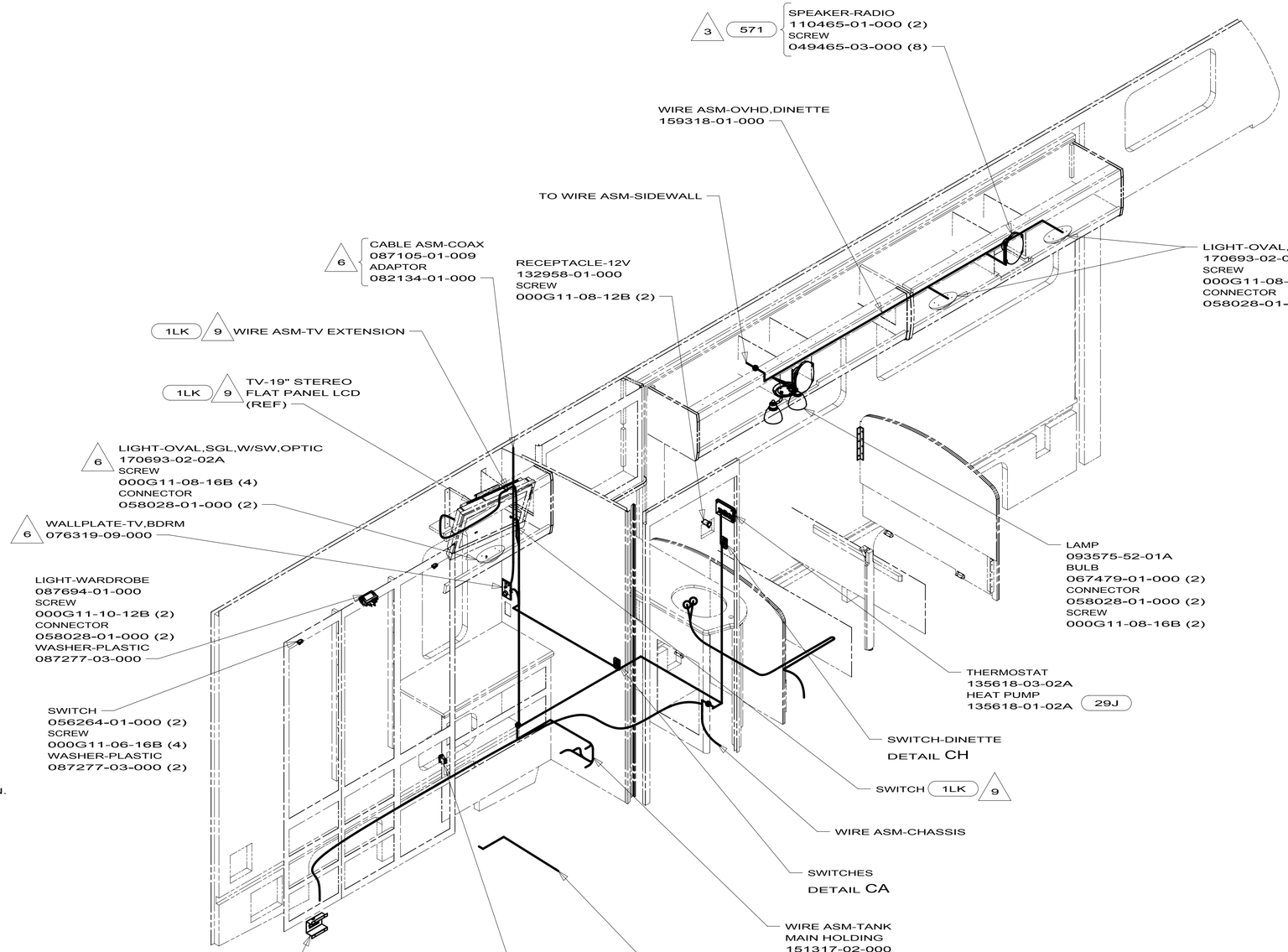

3 571 SPEAKER-RADIO
110465-01-000 (2)
SCREW
049465-03-000 (8)

WIRE ASM-OVHD,DINETTE
159318-01-000

TO WIRE ASM-SIDEWALL

6 CABLE ASM-COAX
087105-01-009
ADAPTOR
082134-01-000

RECEPTACLE-12V
132958-01-000
SCREW
000G11-08-12B (2)

LIGHT-OVAL,SGL,W/SW,OPTIC
170693-02-02A
SCREW
000G11-08-16B (4)
CONNECTOR
058028-01-000 (2)

1LK 9 WIRE ASM-TV EXTENSION

1LK 9 TV-19" STEREO
FLAT PANEL LCD
(REF)

6 LIGHT-OVAL,SGL,W/SW,OPTIC
170693-02-02A
SCREW
000G11-08-16B (4)
CONNECTOR
058028-01-000 (2)

6 WALLPLATE-TV,BDRM
076319-09-000

LIGHT-WARDROBE
087694-01-000
SCREW
000G11-10-12B (2)
CONNECTOR
058028-01-000 (2)
WASHER-PLASTIC
087277-03-000

SWITCH
056264-01-000 (2)
SCREW
000G11-06-16B (4)
WASHER-PLASTIC
087277-03-000 (2)

LAMP
093575-52-01A
BULB
067479-01-000 (2)
CONNECTOR
058028-01-000 (2)
SCREW
000G11-08-16B (2)

THERMOSTAT
135618-03-02A
HEAT PUMP
135618-01-02A 29J

SWITCH-DINETTE
DETAIL CH

SWITCH 1LK 9

WIRE ASM-CHASSIS

SWITCHES
DETAIL CA

WIRE ASM-TANK
MAIN HOLDING
151317-02-000

INLET
COAX (RED)
DETAIL AA

WIRE ASM-HEATER,TANK
FROM RIGHT SIDE 23T 23R 4 2

SWITCH-WATER PUMP
108357-15-000
ACTUATOR
108356-04-01A
(CONNECTS TO
WIRE ASM-CHASSIS)
64R 5

1LK	TV-19"DC,COLOR,LCD W/REMOTE
086	INTERIOR UPGRADE PACKAGE
64R	EXTERIOR WASH STATION
571	RADIO SPEAKERS
29J	AC HEAT PUMP-1
23R	DRAINAGE SYSTEM/HEAT-PREP
23T	DRAINAGE SYSTEM-HEATED
ITA	ITASCA ONLY
WIN	WINNEBAGO ONLY
265	CODES/STANDARDS-CSA/CMVSS
1B1	CODES/STANDARDS USA

1B1 265

9 SEE WIRING INST TV/DVD FOR ADDITIONAL INFORMATION.

8 USE SCREWS SUPPLIED WITH TV.

7 WIRE ASSEMBLIES TO BE SUPPLIED LOOSES IN COACH.

6 NOT USED WITH 1LK

5 WITHOUT 64R INSTALL SWITCH ON WIRE ASM, ROUTE & SECURE PUMP SWITCH BRANCH BACK ALONG FRAME RAIL, THRU UPPER FLOOR ASM AT WIRE ASM-CHASSIS AND WIRE ASM-RIGHT CONNECTION POINT.

4 WIRE ROUTED ALONG DRAINAGE PIPE.

3 USE ONE OF THE 4 SPEAKER ASM'S PROVIDED IN KIT. SEND SCREW IN THE KIT TO THE SURPLUS STORE TO BE SOLD. SEND THE WIRE ASM W/HSG TO WIRE PREP TO BE INCORPORATED INTO THE NECESSARY WIRE LOOM.

2 SEE DRAINAGE SYSTEM INSTL FOR HEATER PAD PART NUMBERS AND LOCATIONS.

1. ROUTE TANK SENSOR WIRES SO THEY DO NOT PASSOVER SENSORS. USE WIRE TIE MOUNT 155366-01-000 AND WIRE TIE 008343-01-000 AS NEEDED. TANK SURFACE MUST BE CLEANED USING ISOPROPYL ALCOHOL AND PRIME WITH PRIMER 94

NOTES:

10 331C

FOR ELECTRICAL TORQUE SPECIFICATIONS SEE DWG NO. 128783-01-000

X-X

FOR ELECTRICAL CALLOUTS SEE DWG NO. 121339-01-000

WIRING INSTL-BODY,12V

1 6 170103

2/3/2010

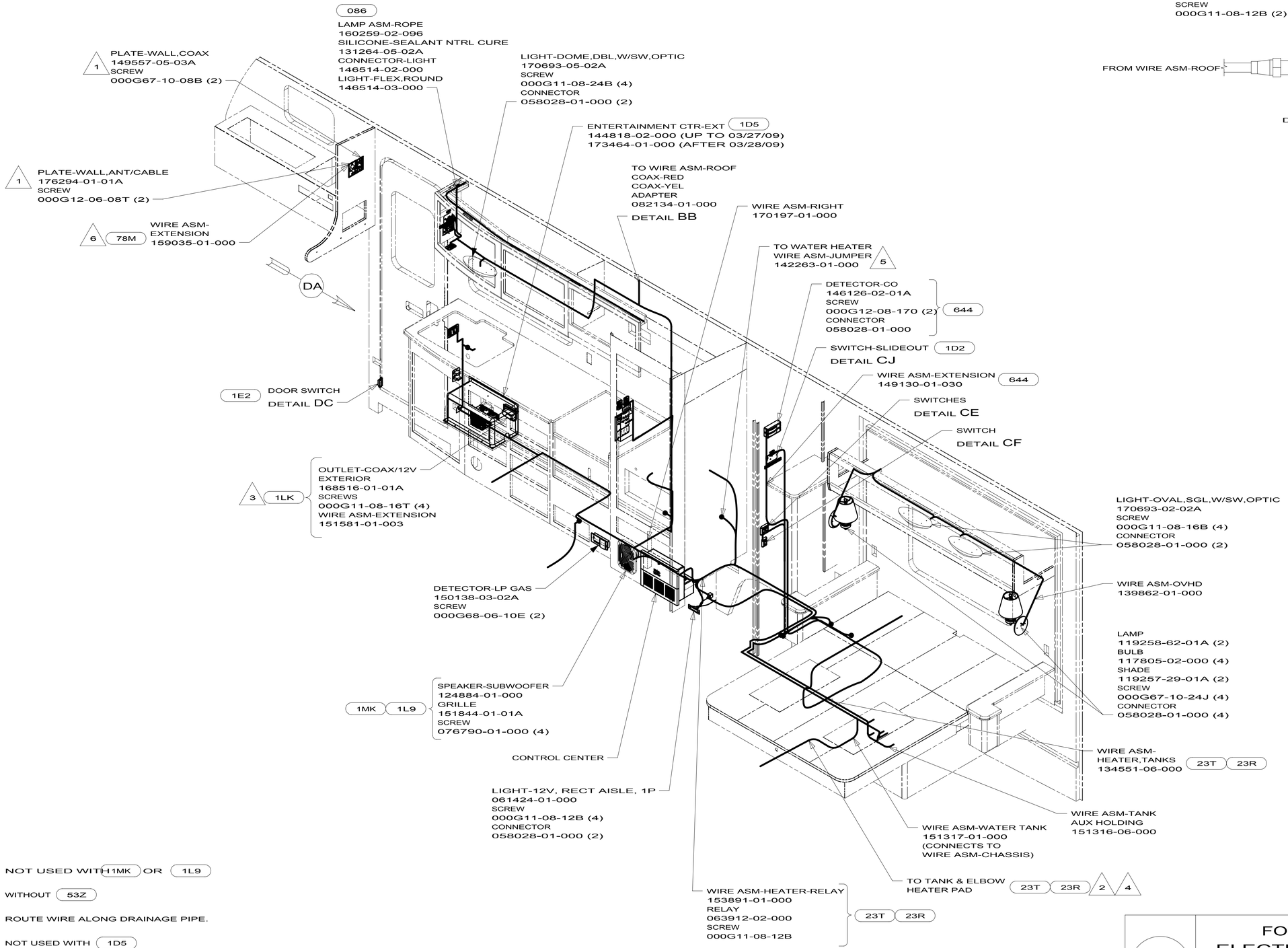

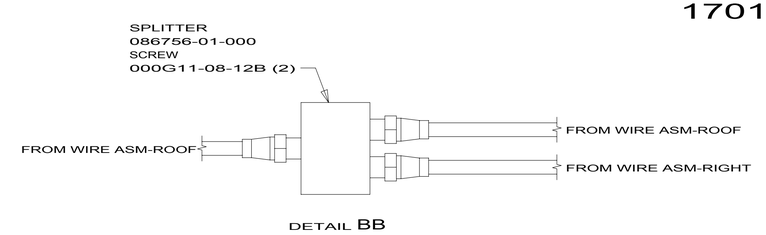

1LK	TV-19"DC,COLOR,LCD W/REMOTE
1D2	SLIDEOUT ROOM-REAR RIGHTHAND
78M	BUNK FRONT OVERHEAD
53Z	WTR HTR-6GAL/110/LP/MTR/AUTO
644	GREAT ALASKAN RENTAL PACKAGE
1L9	ENTERTAINMENT CENTER-CABOVER
40N	GEN-4.0KW-ONANGAS-MICROQUIET
23R	DRAINAGE SYSTEM/HEAT-PREP
23T	DRAINAGE SYSTEM-HEATED
1MK	TV-19"DC,STEREO SYS,VDEO SEL
1E2	ENTRANCE STEP-ELEC.
1D5	ENTERTAINMENT CENTR/EXT W/CD
1A3	GENERATOR WITHOUT
086	INTERIOR UPGRADE PACKAGE
265	CODES/STANDARDS-CSA/CMVSS
1B1	CODES/STANDARDS USA

1B1 265

NOTES:

6 NOT USED WITH 1MK OR 1L9

5 WITHOUT 53Z

4 ROUTE WIRE ALONG DRAINAGE PIPE.

3 NOT USED WITH 1D5

2 SEE DRAINAGE SYSTEM INSTL FOR HEATING PAD PART NUMBERS AND LOCATIONS.

1 SEE WIRING INSTL-TV/DVD SIDE FOR ADDITIONAL INFORMATION.

FOR ELECTRICAL TORQUE SPECIFICATIONS SEE DWG NO. 128783-01-000

X-X

FOR ELECTRICAL CALLOUTS SEE DWG NO. 121339-01-000

10 331C

WIRING INSTL-BODY,12V

2 170103

2/3/2010

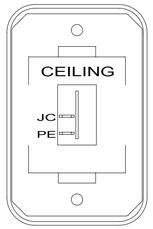

SWITCH-ROCKER
135740-01-01A
SWITCH-BASE
135741-01-01A
SWITCH-BEZEL
135742-07-02A
SCREW
000G11-08-08B (2)

DETAIL CA

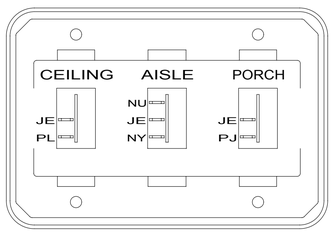

SWITCH-ROCKER
135740-01-01A (2)
135740-02-01A
SWITCH-BASE
135741-03-01A
SWITCH-BEZEL
135742-26-02A
SCREW
000G11-08-08B (4)

DETAIL CB

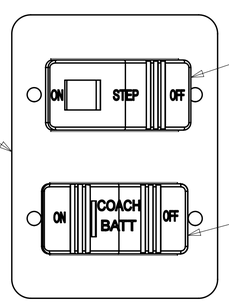

PLATE-SWITCH
098351-22-02A
SCREW
000G11-06-10B (4)

SWITCH-STEP
108357-19-000 — 1E2

SWITCH-BLANK
096241-03-000 — 1

SWITCH-BATT DISC
108357-17-000
ACTUATOR-BATT DISC
108356-19-01A

DETAIL CC

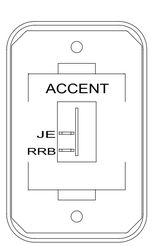

SWITCH-ROCKER
135740-01-01A
SWITCH-BASE
135741-01-01A
SWITCH-BEZEL
135742-50-02A
SCREW
000G11-08-08B (2)

DETAIL CM 086

DRIVER'S SIDE FRONT — LABEL-SLIDEOUT,DRIVER,FRONT
163992-01-01A

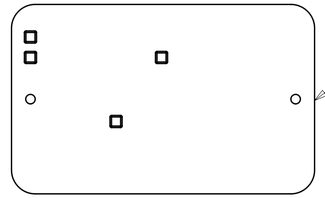

SWITCH,SLIDEOUT
138173-04-000 (UP TO 06-21-09)
171341-01-000 (AFTER 06-22-09)
SCREW
076790-05-000 (2)

LABEL-WARNING, SLIDEOUT
116549-01-000

WARNING	CRUSH HAZARD. Keep people and objects clear of the inside and the outside of the slideout room when operating. Failure to comply could result in death or serious injury. 116549-01R

MASTER SLIDE ROOM CONTROL SWITCH

This switch must be on and park brake applied to perate any slide room. We recommend running the engine to insure adequate battery power.

OFF
ON

NOTICE
Remove room locking bar before operating slide room or damage may occur.

PLATE-KEY, SLIDE ROOM
163987-01-02B
SCREW
076790-05-000 (4)

LABEL-SLIDROOM CONTROL, MAN
163988-01-01A

SWITCH-KEY,SPST-ILLINOIS LCK
163097-01-000

DETAIL CD

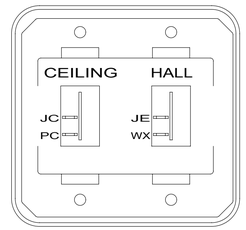

SWITCH-ROCKER
135740-01-01A (2)
SWITCH-BASE
135741-01-01A
SWITCH-BEZEL
135742-16-02A
SCREW
000G11-08-08B (4)

DETAIL CE

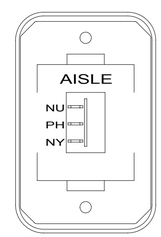

SWITCH-ROCKER
135740-02-01A
SWITCH-BASE
135741-01-01A
SWITCH-BEZEL
135742-06-02A
SCREW
000G11-08-08B (2)

DETAIL CF

PASSENGER'S SIDE REAR — LABEL-SLIDEOUT,PASS,REAR
163992-03-01A

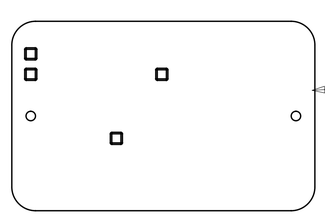

SWITCH-SLIDEOUT
138173-04-000 (UP TO 06-21-09)
171341-01-000 (AFTER 06-22-09)
SCREW
076790-05-000 (2)

LABEL-WARNING,SLIDEOUT
116549-01-000

WARNING	CRUSH HAZARD. Keep people and objects clear of the inside and the outside of the slideout room when operating. Failure to comply could result in death or serious injury. 116549-01R

DETAIL CJ

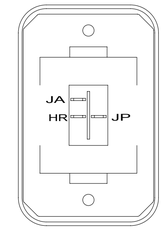

SWITCH-ROCKER
135740-06-01A
SWITCH-BASE
135741-01-01A
SWITCH-BEZEL
135742-01-01A
SCREW
000G11-08-08B (2)
LABEL-SWITCH
134563-01-02A

HOLDING TANK HEATER
TURN OFF When Not In Use
SEE OPERATORS MANUAL

DETAIL CG 23T OR 23R

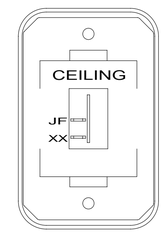

SWITCH-ROCKER
135740-01-01A
SWITCH-BASE
135741-01-01A
SWITCH-BEZEL
135742-07-02A
SCREW
000G11-08-08B (2)

DETAIL CH

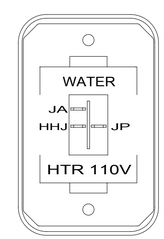

SWITCH-ROCKER
135740-06-01A
SWITCH-BASE
135741-01-01A
SWITCH-BEZEL
135742-35-02A
SCREW
000G11-08-08B (2)

DETAIL CK 53Z

1LK	TV-19"DC,COLOR,LCD W/REMOTE
23R	DRAINAGE SYSTEM/HEAT-PREWIRE
53Z	WTR HTR-6GAL/110/LP/MTR/AUTO
23T	DRAINAGE SYSTEM-HEATED
1E2	ENTRANCE STEP-ELEC.
086	INTERIOR UPGRADE PACKAGE
265	CODES/STANDARDS-CSA/CMVSS
1B1	CODES/STANDARDS USA

1B1 265

10 331C

FOR ELECTRICAL TORQUE SPECIFICATIONS SEE DWG NO. 128783-01-000

X-X — FOR ELECTRICAL CALLOUTS SEE DWG NO. 121339-01-000

1 NOT USED WITH 1E2

NOTES:

WIRING INSTL-BODY,12V

2/3/2010

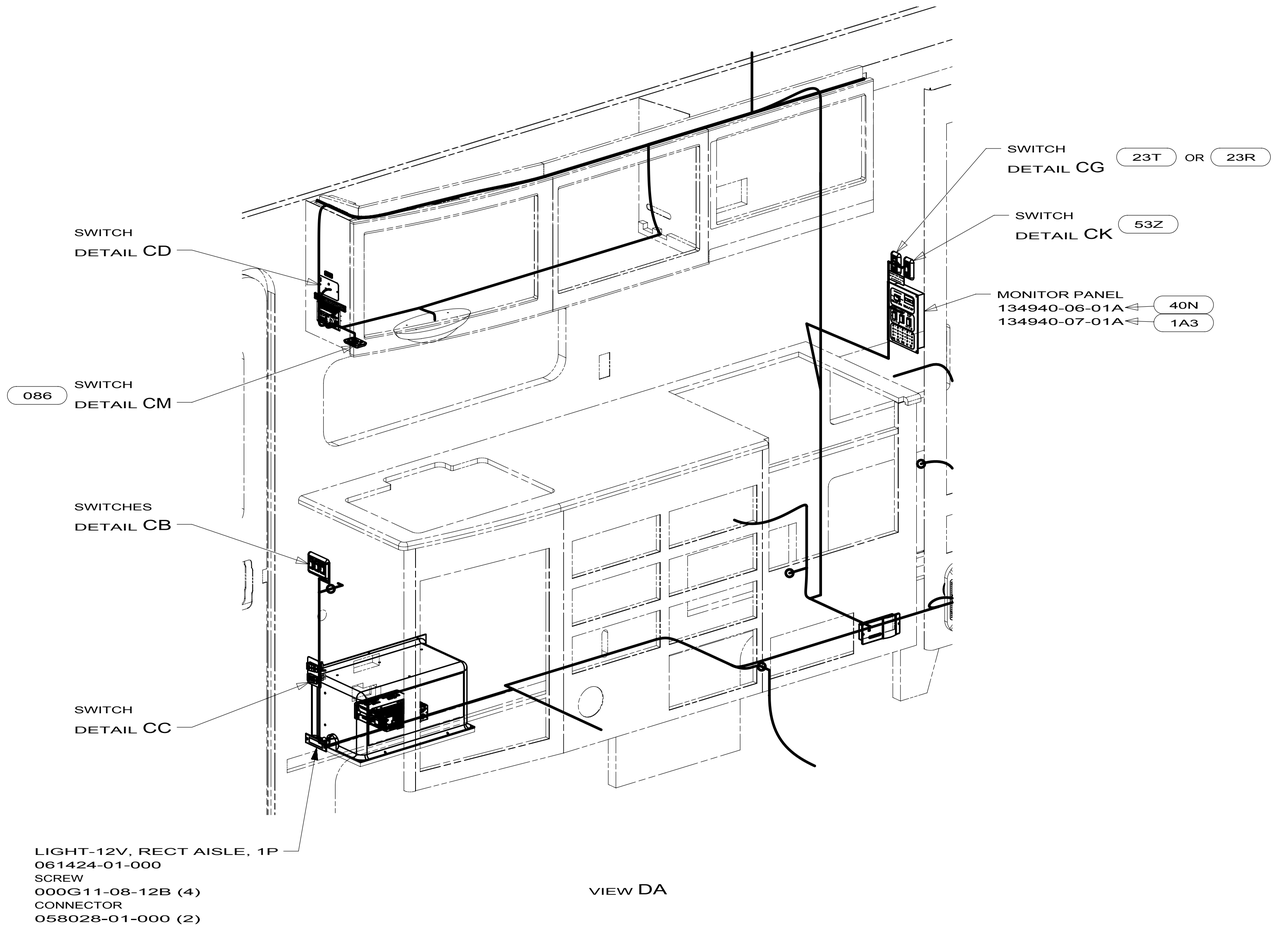

VIEW DA

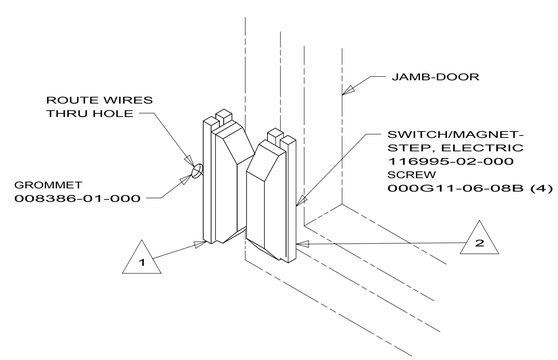

DETAIL DC

53Z	WTR HTR-6GAL/110/LP/MTR/AUTO
23R	DRAINAGE SYSTEM/HEAT-PREWIRE
23T	DRAINAGE SYSTEM-HEATED
086	INTERIOR UPGRADE PACKAGE
50H	RADIOS TWO-WAY (4)
40N	GEN-4.0KW-ONANGAS-MICROQUIET
23T	DRAINAGE SYSTEM-HEATED
1E2	ENTRANCE STEP-ELEC.
1A3	GENERATOR WITHOUT
265	CODES/STANDARDS-CSA/CMVSS
1B1	CODES/STANDARDS USA

3 SEE WIRING INSTL-BODY,110V FOR ADDITIONAL INFORMATION.

2 MOUNT MAGNET USING PILOT HOLES IN SCREEN DOOR FRAME
MOUNT WITH MAGNET TOWARD SWITCH.

1 MOUNT SWITCH AND SPACER TO BLOCK ON JAMB
ADJUST HEIGHT TO MATCH MAGNET.

NOTES:

FOR ELECTRICAL
TORQUE
SPECIFICATIONS
SEE DWG NO.
128783-01-000

X-X

FOR
ELECTRICAL
CALLOUTS
SEE DWG NO.
121339-01-000

1B1 265

10 331C

WIRING INSTL-BODY,12V

4 170103

2/3/2010

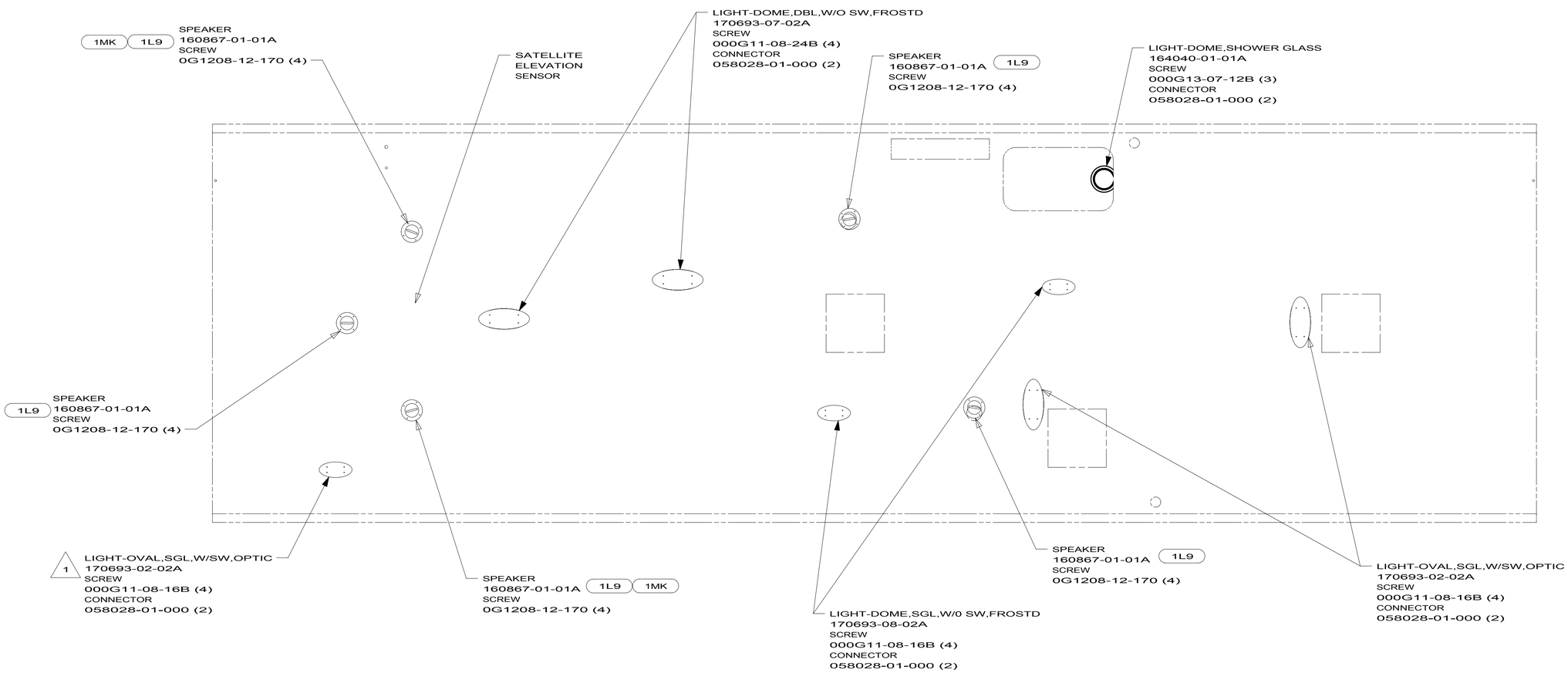

1MK TV-19"DC,STEREO SYS,VDEO SEL

1L9 ENTERTAINMENT CENTER-CABOVER

265 CODES/STANDARDS-CSA/CMVSS

1B1 CODES/STANDARDS USA

1 NOT USED WITH 1L9

NOTES:

FOR ELECTRICAL TORQUE SPECIFICATIONS SEE DWG NO. 128783-01-000

X-X

FOR ELECTRICAL CALLOUTS SEE DWG NO. 121339-01-000

1B1 265

10 331C

WIRING INSTL-BODY,12V

5 170103

2/3/2010

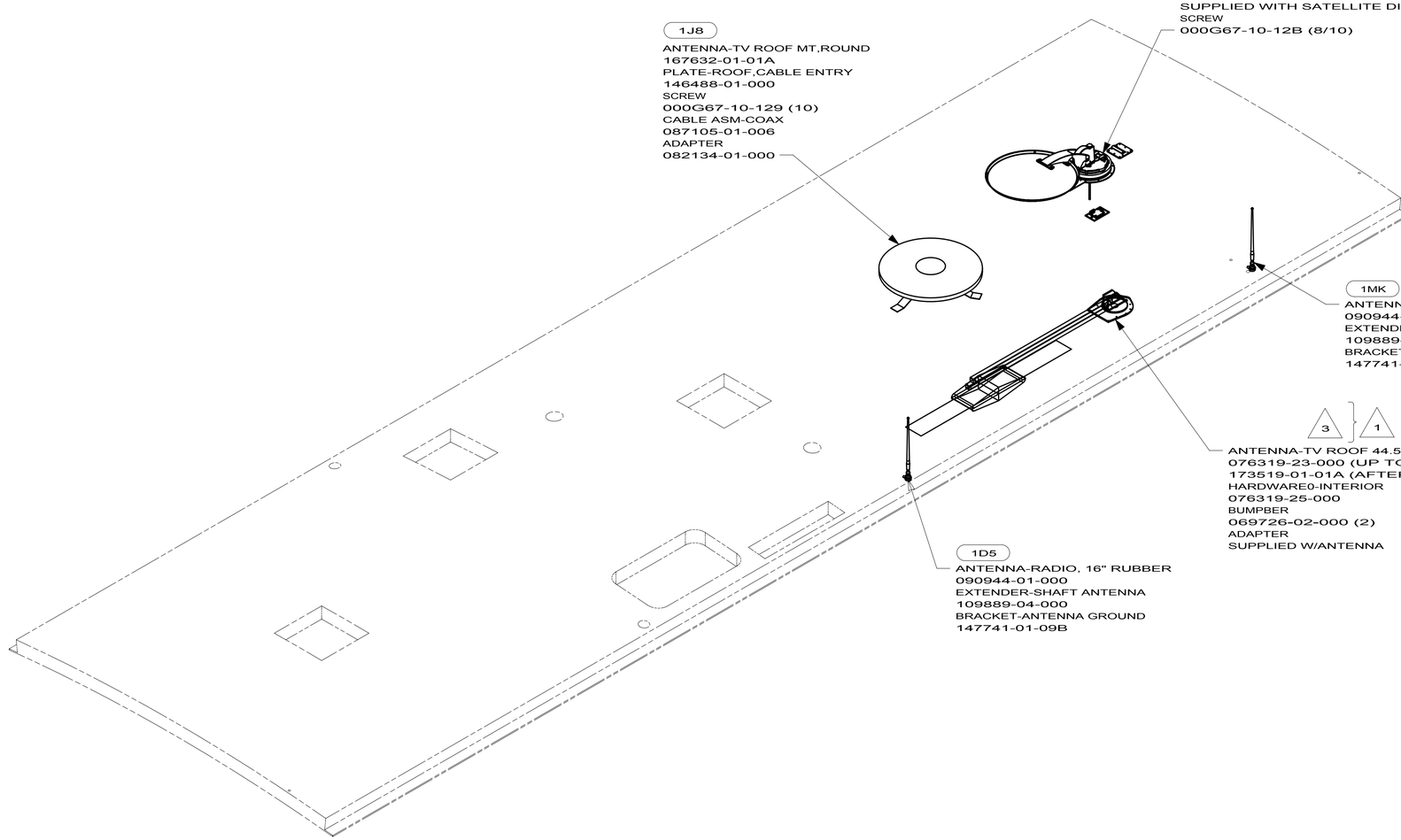

1MK	TV-19"DC,STEREO SYS,VDEO SEL
48Q	SATELLITE DISH & ELEV.SENSOR
1J8	TV ANTENNA-OMNIDIRECTIONAL
1D5	ENTERTAINMENT CENTR/EXT W/CD
265	CODES/STANDARDS-CSA/CMVSS
1B1	CODES/STANDARDS USA

3 SEE DRAWING 076319-01-000 FOR INSTALLATION OF TV ANTENNA.

1 NOT USED WITH 1J8

NOTES:

FOR ELECTRICAL TORQUE SPECIFICATIONS SEE DWG NO. 128783-01-000

X-X

FOR ELECTRICAL CALLOUTS SEE DWG NO. 121339-01-000

1B1 265

10 331C

WIRING INSTL-BODY,12V

6 170103

2/3/2010

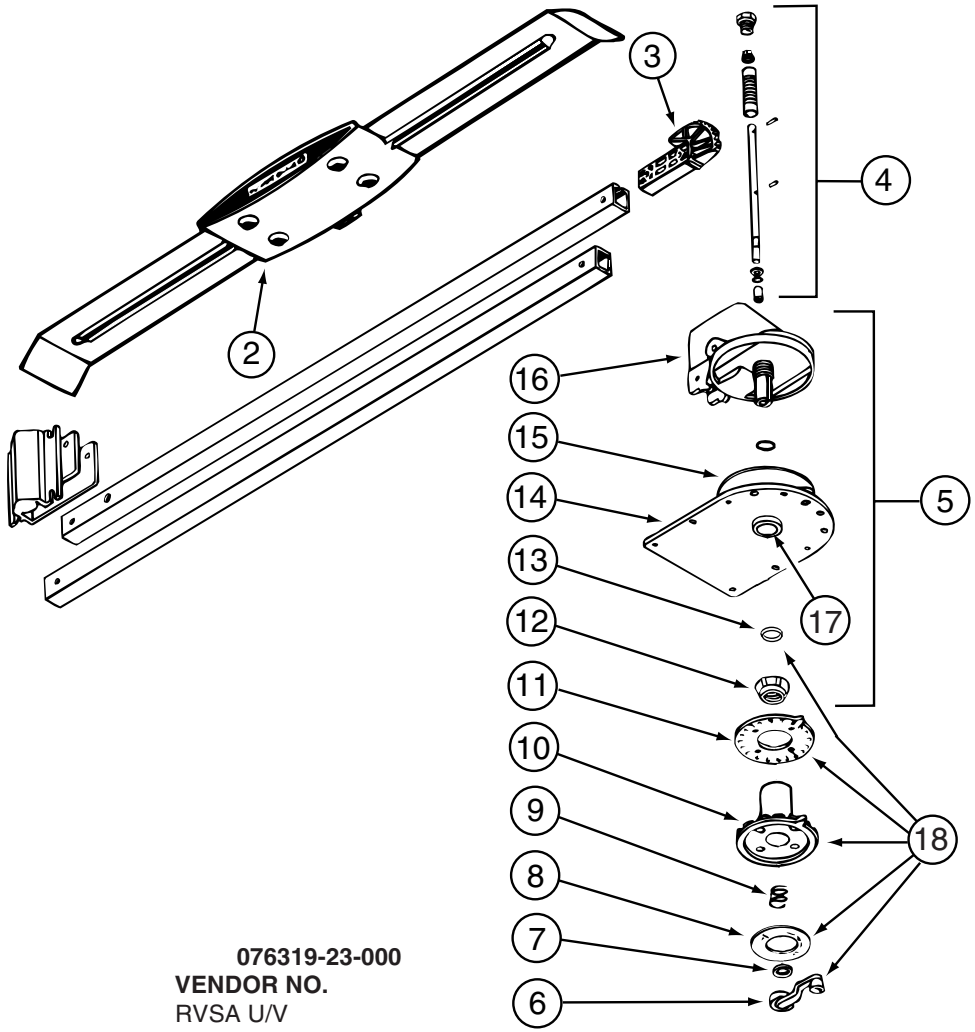

076319-23-000

KEY	PART NUMBER	U/M	DESCRIPTION	VENDOR NO.
2	076319-01-700	EA	HEAD-ANTENNA, AMPLIFIED	RVSA U/V
3	076319-01-701	EA	GEAR-ELEVATING, PLASTIC	2200046
4	076319-01-702	EA	SHAFT ASM-ELEVATING	RP-4000
5	076319-01-711	EA	BASE & LIFT ASM	2762802
7	076319-01-705	EA	GROMMET-NYLON, 7/8"ID	3200658
8	076319-01-708	EA	DECAL-CRANK	5413002
9	076319-01-707	EA	SPRING-HANDLE	2160822
11	076319-01-712	EA	PLATE - CEILING	3200608
12	076319-01-715	EA	NUT (GEAR HOUSING)	2200047
14	076319-01-713	EA	PLATE-BASE, STEEL	3100523
15	076319-01-703	EA	BEARING-NYLON, 5"OD	3200656
16	076319-01-714	EA	HOUSING, ROTATING GEAR	2200049
17	076319-01-704	EA	BEARING-NYLON, 1.25"OD	3200657
18	076319-01-709	EA	HANDLE-HEAD DIRECTIONAL	200644
	076319-01-716	EA	TUBING, ELEVATING	RP-2900

CONTACT WINNEBAGO PART SALES FOR UNLISTED COMPONENT(S)

COPYRIGHT © 2009 WINNEBAGO INDUSTRIES INC.

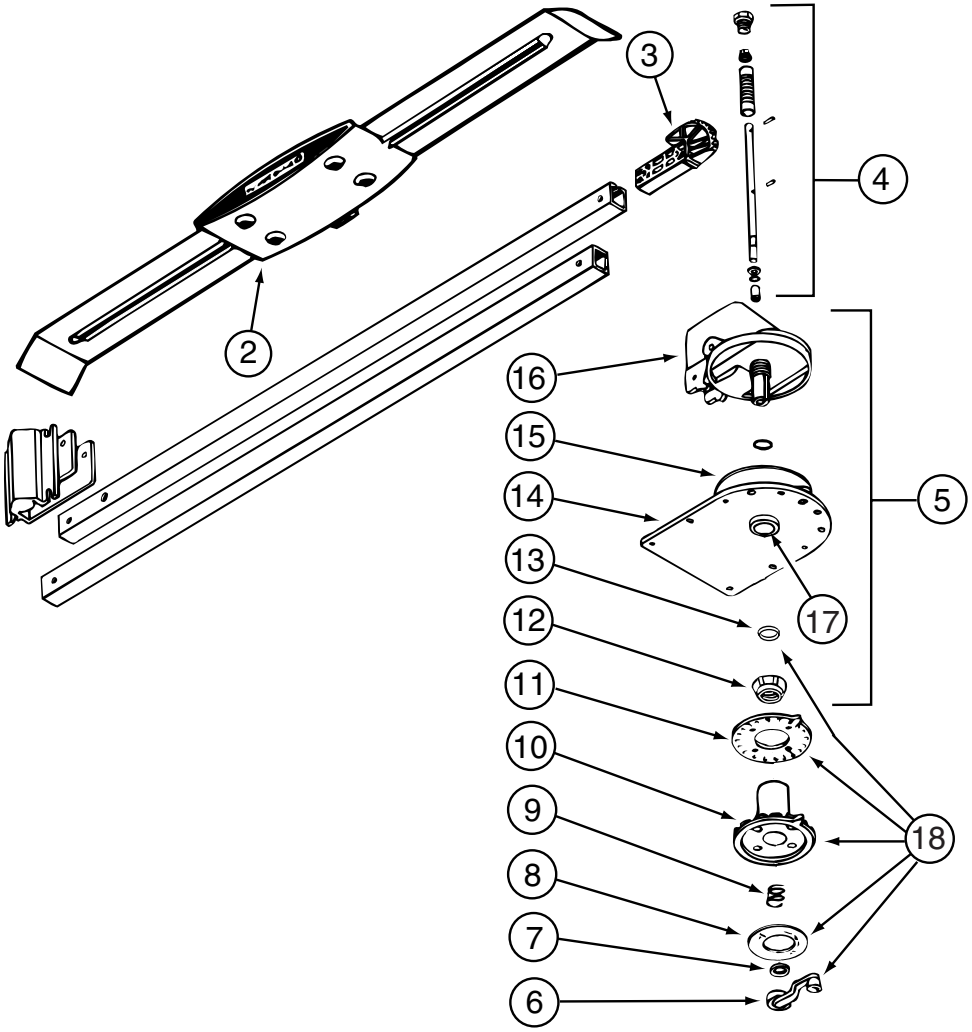

076319-25-000

KEY	PART NUMBER	U/M	DESCRIPTION	VENDOR NO.
6	076319-01-706	EA	CRANK-W/SET SCREW UNIV/BEIGE	2750897
6	120233-01-710	EA	HANDLE-CRANK W/SCREW - WHITE	RP-6795
8	076319-01-708	EA	DECAL-CRANK	5413002
10	076319-25-700	EA	DIRECTIONAL HANDLE(WHITE)	3200612
11	076319-25-701	EA	PLATE - CEILING(WHITE)	3200609
13	120233-01-709	EA	WASHER-NYLON	RP-2658

CONTACT WINNEBAGO PART SALES FOR UNLISTED COMPONENT(S)

COPYRIGHT © 2009 WINNEBAGO INDUSTRIES INC.

087694-01-000

KEY	PART NUMBER	U/M	DESCRIPTION	VENDOR NO.
	087694-01-700	EA	BULB	GE561

COPYRIGHT © 2009 WINNEBAGO INDUSTRIES INC.

093575-46-01A

KEY	PART NUMBER	U/M	DESCRIPTION	VENDOR NO.
	093575-46-700	EA	GLOBE	98
	093575-46-701	EA	NUT-PLAS. LOCKING	39155

093575-47-01A

KEY	PART NUMBER	U/M	DESCRIPTION	VENDOR NO.
	093575-47-700	EA	GLOBE - GLASS	114-GLASS

093575-52-01A

KEY	PART NUMBER	U/M	DESCRIPTION	VENDOR NO.
	093575-52-700	EA	SHADE-FABRIC	H3015

COPYRIGHT © 2009 WINNEBAGO INDUSTRIES INC.

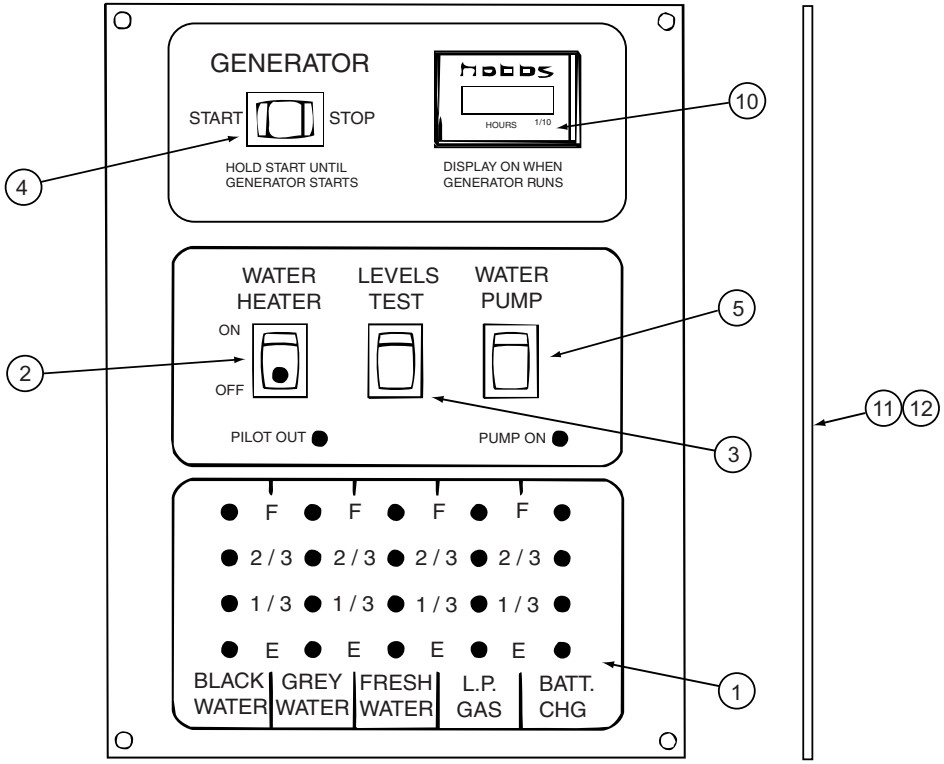

134940-06-01A

KEY	PART NUMBER	U/M	DESCRIPTION	VENDOR NO.
1	134940-01-702	EA	CHASSIS - SILKSCREENED	CC0558-00
2	134940-01-701	EA	SWITCH-SPST/ON-OFF/BLK W/LGT	L0109
3	096983-01-701	EA	SWITCH - SPST/MOM 2 TERMINAL	L0111-00
4	096983-01-702	EA	SWITCH - MOM/OFF/MOM/3 TERM	L0112-00
5	096983-01-703	EA	SWITCH - ON/ON	L0115-00
10	100258-10-701	EA	GAUGE-HR METER ONLY (LCD)	L0775-00
11	134940-06-700	EA	PC BOARD - SENSOR SYSTEM/RED	L5131-02
			CONTACT WINNEBAGO PART SALES FOR UNLISTED COMPONENT(S)	

134940-07-01A

KEY	PART NUMBER	U/M	DESCRIPTION	VENDOR NO.
1	134940-01-702	EA	CHASSIS - SILKSCREENED	CC0558-00
2	134940-01-701	EA	SWITCH-SPST/ON-OFF/BLK W/LGT	L0109
3	096983-01-701	EA	SWITCH - SPST/MOM 2 TERMINAL	L0111-00
4	096983-01-703	EA	SWITCH - ON/ON	L0115-00
5	134940-02-700	EA	SWITCH - DUMMY	L0118
11	134940-06-700	EA	PC BOARD - SENSOR SYSTEM/RED	L5131-02
			CONTACT WINNEBAGO PART SALES FOR UNLISTED COMPONENT(S)	

COPYRIGHT © 2009 WINNEBAGO INDUSTRIES INC.

137135-05-000

KEY	PART NUMBER	U/M	DESCRIPTION	VENDOR NO.
	120233-01-714	EA	CLIP-E	5160818
	120233-01-737	EA	PLATE/INT-W/DIRECTIONAL HDLE	RK-CEIL
	120233-01-738	EA	HDW PKG-HANDLE/SPRING/WASHER	RK-HAND
	120233-04-703	EA	KIT-DIRECTIONAL HDL UPGRADE	RP-RM46
	137135-01-703	EA	KIT ELEV-SHAFT/PLUG/SPRING	RP-4400
	137135-01-704	EA	PIN - 1/4" X 3.25"	2160813
	137135-01-708	EA	TURRET	3100728
	137135-01-710	EA	PLATE - ROTATE LIMIT	3720052
	137135-01-712	EA	BEARING - OUTER	2590347
	137135-01-713	EA	TURRET BASE	3100730
	137135-01-714	EA	GEAR - ELEVATING SHAFT	2200465
	137135-01-715	EA	BEARING - INNER	2590348
	137135-01-717	EA	BOLT - FLAT HEAD	2160362
	137135-01-719	EA	BRACKET - PIVOT	2744945
	137135-01-722	EA	CLAMP	2590343

COPYRIGHT © 2009 WINNEBAGO INDUSTRIES INC.

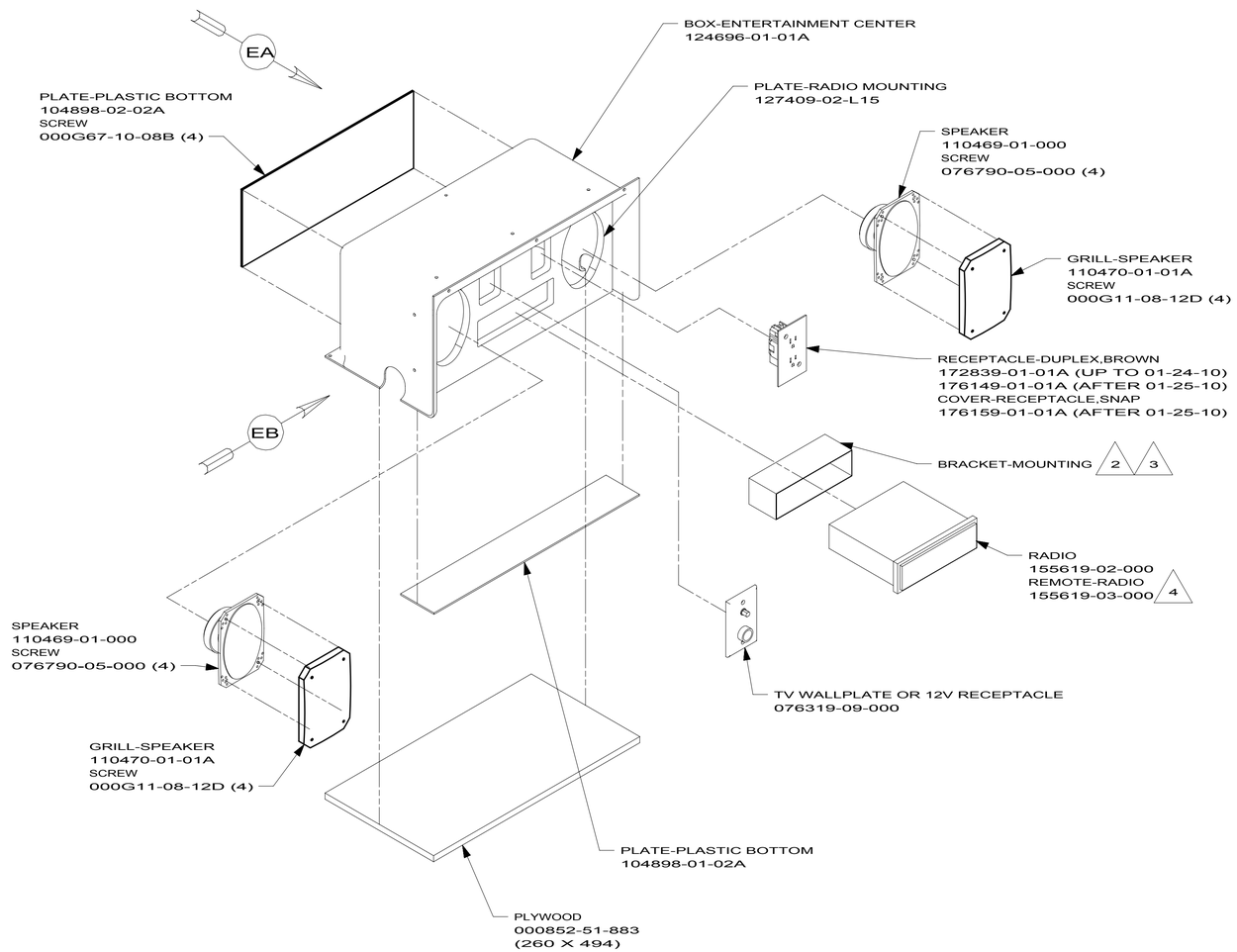

144818-02
331C
728B

4 PUT IN INFO CASE.

3 SUPPLIED WITH RADIO

2 BEND TABS ON MOUNTING BRACKET SUPPLIED WITH RADIO, TO HOLD IN PLACE.

1. SEE WIRING INSTL-BODY FOR ADDITIONAL INFORMATION.

NOTES:

1D5 ENTERTAINMENT CENTER/EXT W/CD

FOR ELECTRICAL TORQUE SPECIFICATIONS SEE DWG NO. 128783-01-000	X-X FOR ELECTRICAL CALLOUTS SEE DWG NO. 121339-01-000

04 MOTORHOMES

ENTERTAINMENT CENTER COMPL

1 144818

1/26/2010

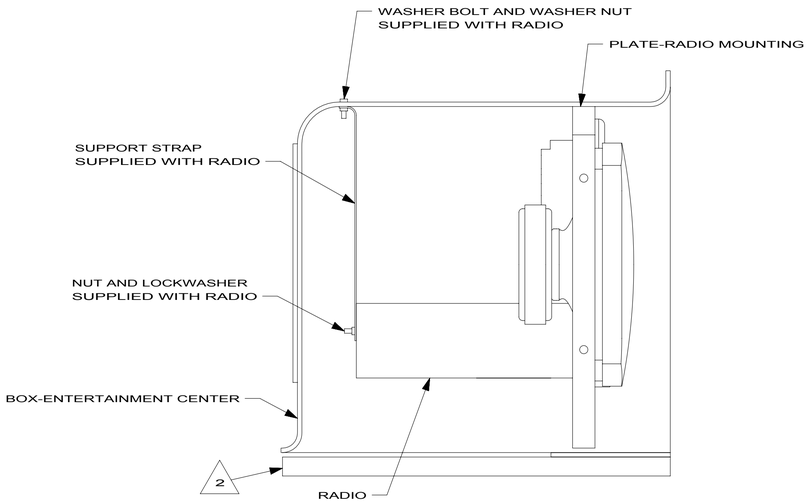

DETAIL EB

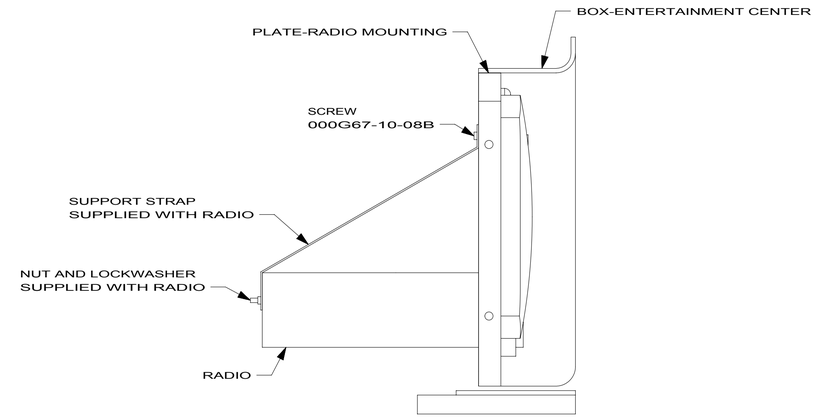

DETAIL ED

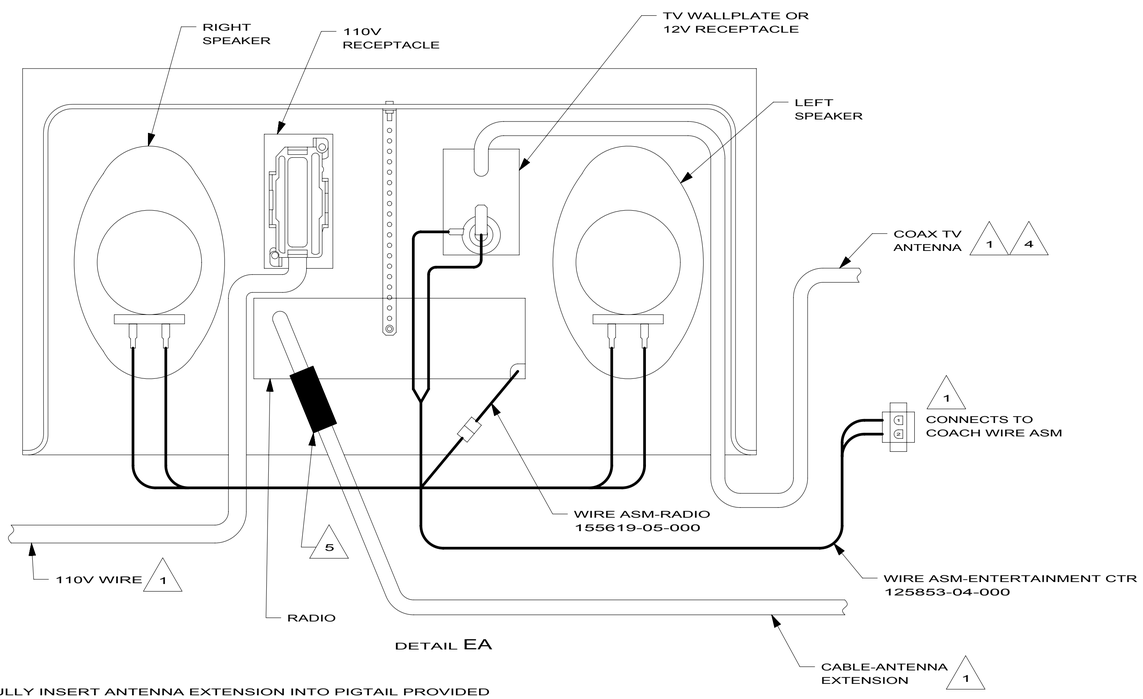

DETAIL EA

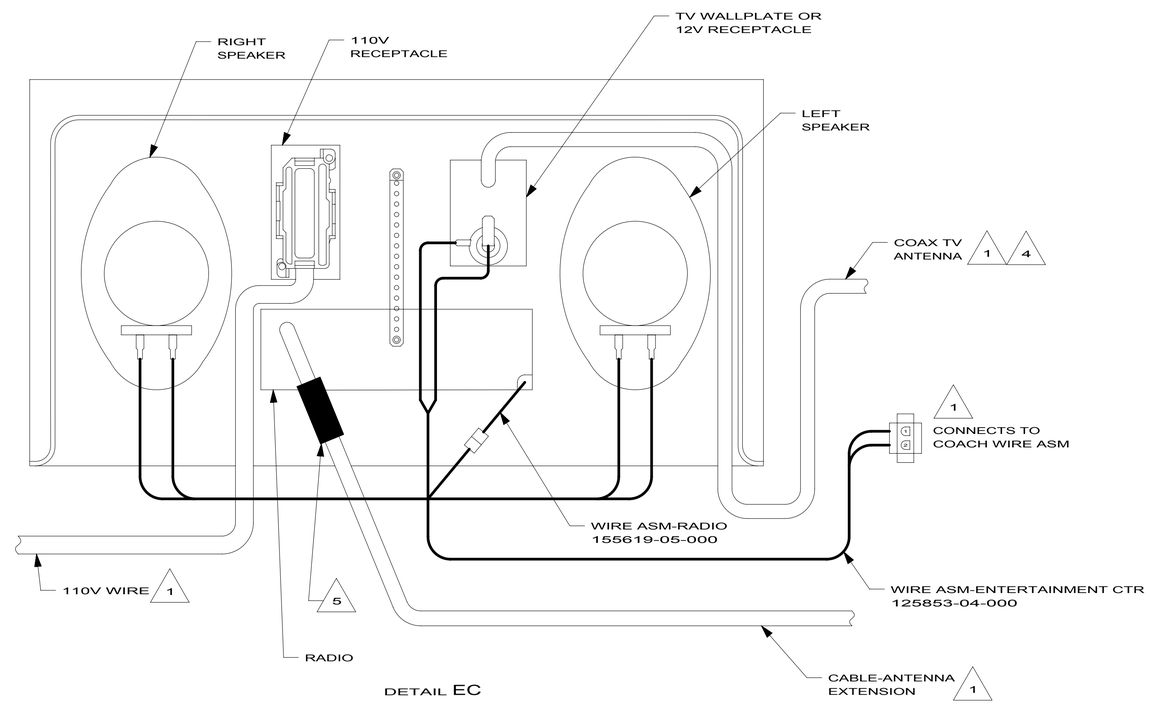

DETAIL EC

NOTES:

1. SEE WIRING INSTL-BODY FOR ADDITIONAL INFORMATION.
2. PLYWOOD ON TAB -02 ONLY.
4. COAX ON TABS -02, & -03 ONLY.
5. FULLY INSERT ANTENNA EXTENSION INTO PIGTAIL PROVIDED ON RADIO & WRAP WITH TAPE 008363-01-000 (100mm).

FOR ELECTRICAL TORQUE SPECIFICATIONS SEE DWG NO. 128783-01-000	X-X FOR ELECTRICAL CALLOUTS SEE DWG NO. 121339-01-000

04 MOTORHOMES

ENTERTAINMENT CENTER COMPL

4 144818

1/26/2010

163097-01-000

KEY	PART NUMBER	U/M	DESCRIPTION	VENDOR NO.
	163097-01-700	EA	KEY - #2382 (ILLINOIS LOCK)	2382
	163097-01-701	EA	KEY - #2341 (MILLER DIAL)	PART SALES

COPYRIGHT © 2009 WINNEBAGO INDUSTRIES INC.

170693-02-02A

KEY	PART NUMBER	U/M	DESCRIPTION	VENDOR NO
	170693-02-700	EA	LENS-OPTIC	L8106

170693-05-02A, 171693-07-02A

KEY	PART NUMBER	U/M	DESCRIPTION	VENDOR NO
	170693-05-700	EA	LENS	L8105

COPYRIGHT © 2010 WINNEBAGO INDUSTRIES INC.

172120-01-000

KEY	PART NUMBER	U/M	DESCRIPTION	VENDOR NO.
	172120-01-700	EA	REMOTE - RADIO	REMJCD

COPYRIGHT © 2010 WINNEBAGO INDUSTRIES INC.

173464-01
331C
728B

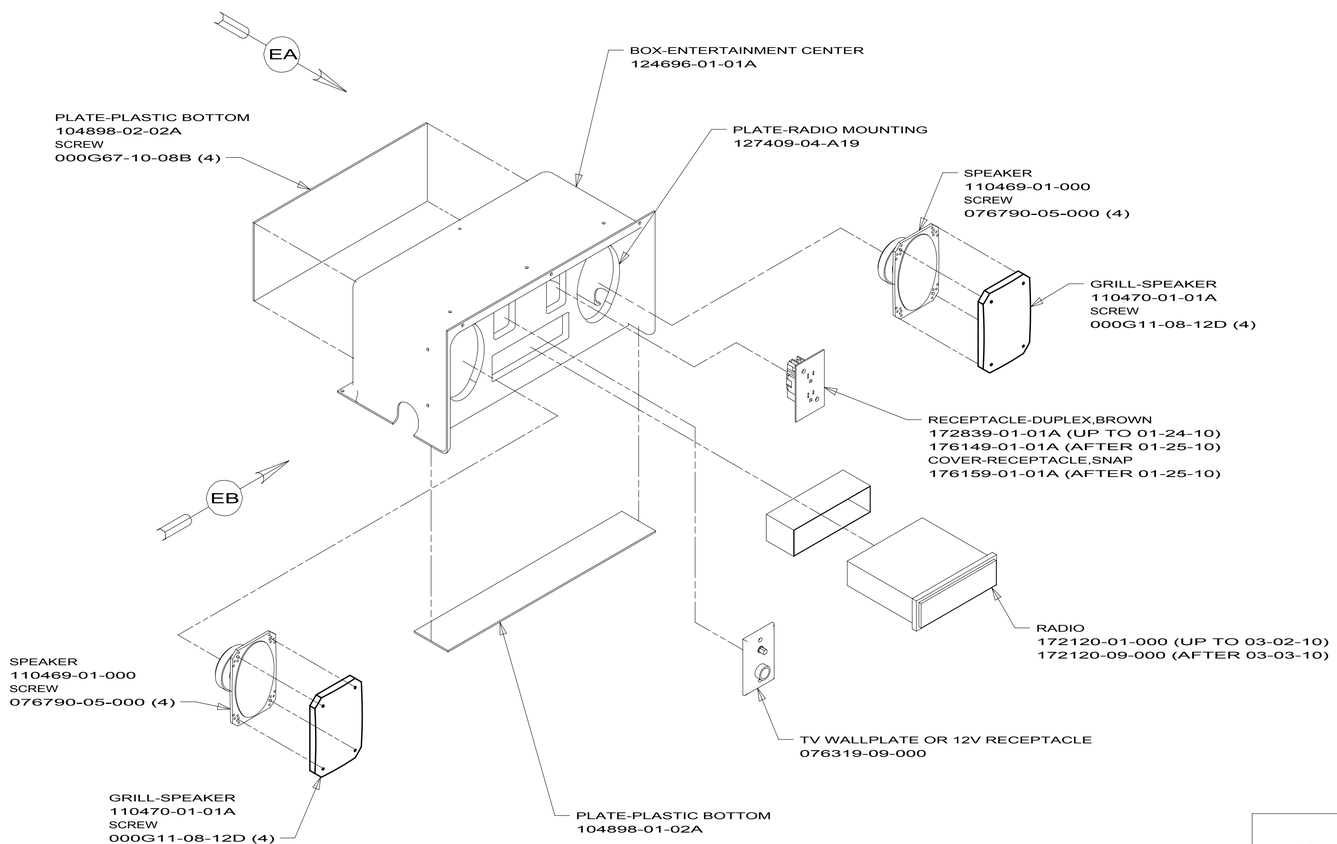

1D5 ENTERTAINMENT CENTER/EXT W/CD

FOR ELECTRICAL TORQUE SPECIFICATIONS SEE DWG NO. 128783-01-000

X-X

FOR ELECTRICAL CALLOUTS SEE DWG NO. 121339-01-000

NOTES:

1. SEE WIRING INSTL-BODY FOR ADDITIONAL INFORMATION.

ENTERTAINMENT CENTER COMPL

1 173464

2/26/2010

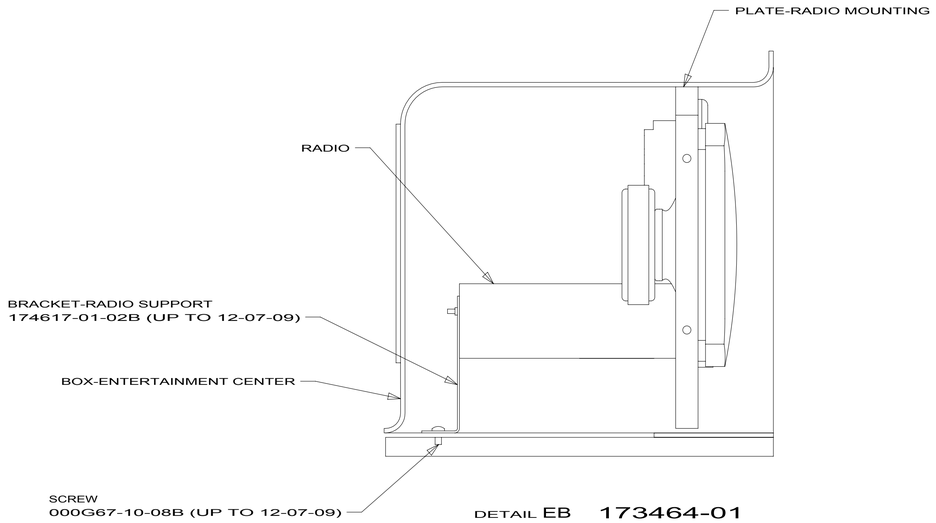

DETAIL EB 173464-01

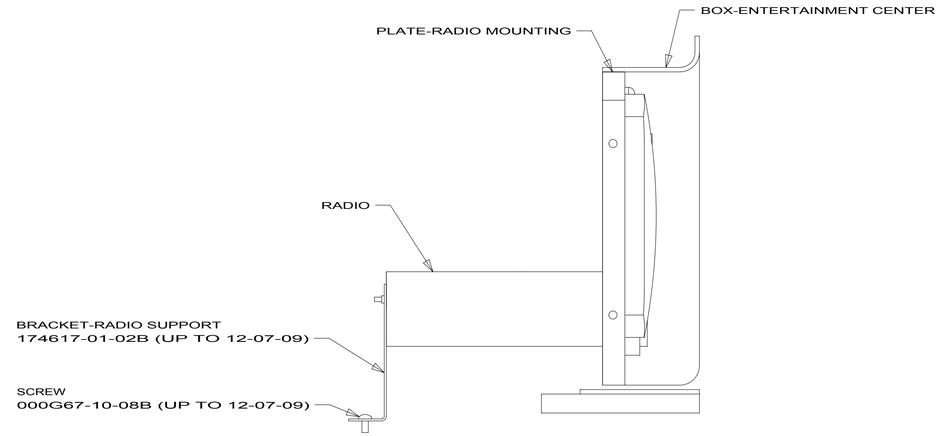

DETAIL ED 173464-03
173464-07
173464-08

173464-01
173464-03
173464-07
173464-08

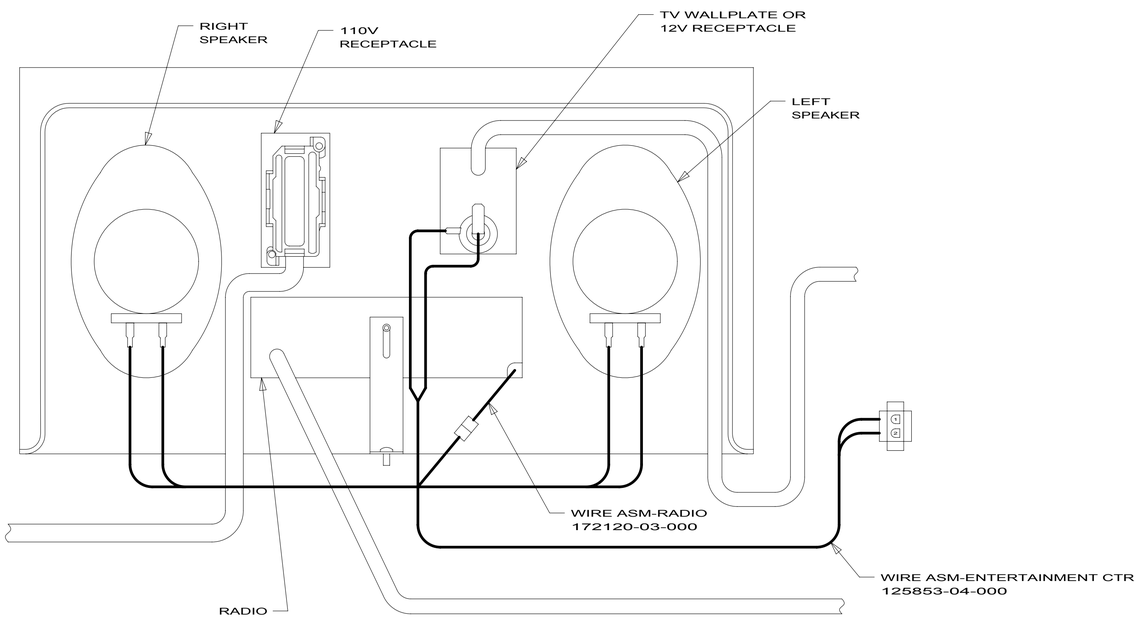

DETAIL EA 173464-01

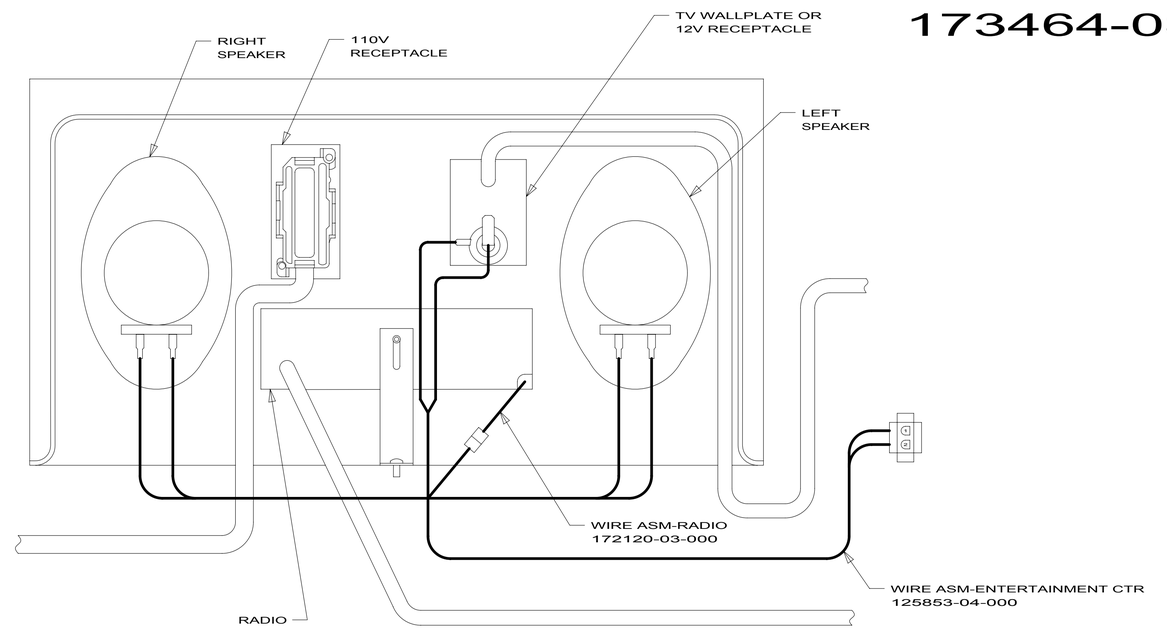

DETAIL EC 173464-03
173464-07
173464-08

1D5 ENTERTAINMENT CENTER/EXT W/CD

FOR ELECTRICAL TORQUE SPECIFICATIONS SEE DWG NO. 128783-01-000

X-X

FOR ELECTRICAL CALLOUTS SEE DWG NO. 121339-01-000

10 MOTORHOMES

ENTERTAINMENT CENTER COMPL

4 173464

1/26/2010

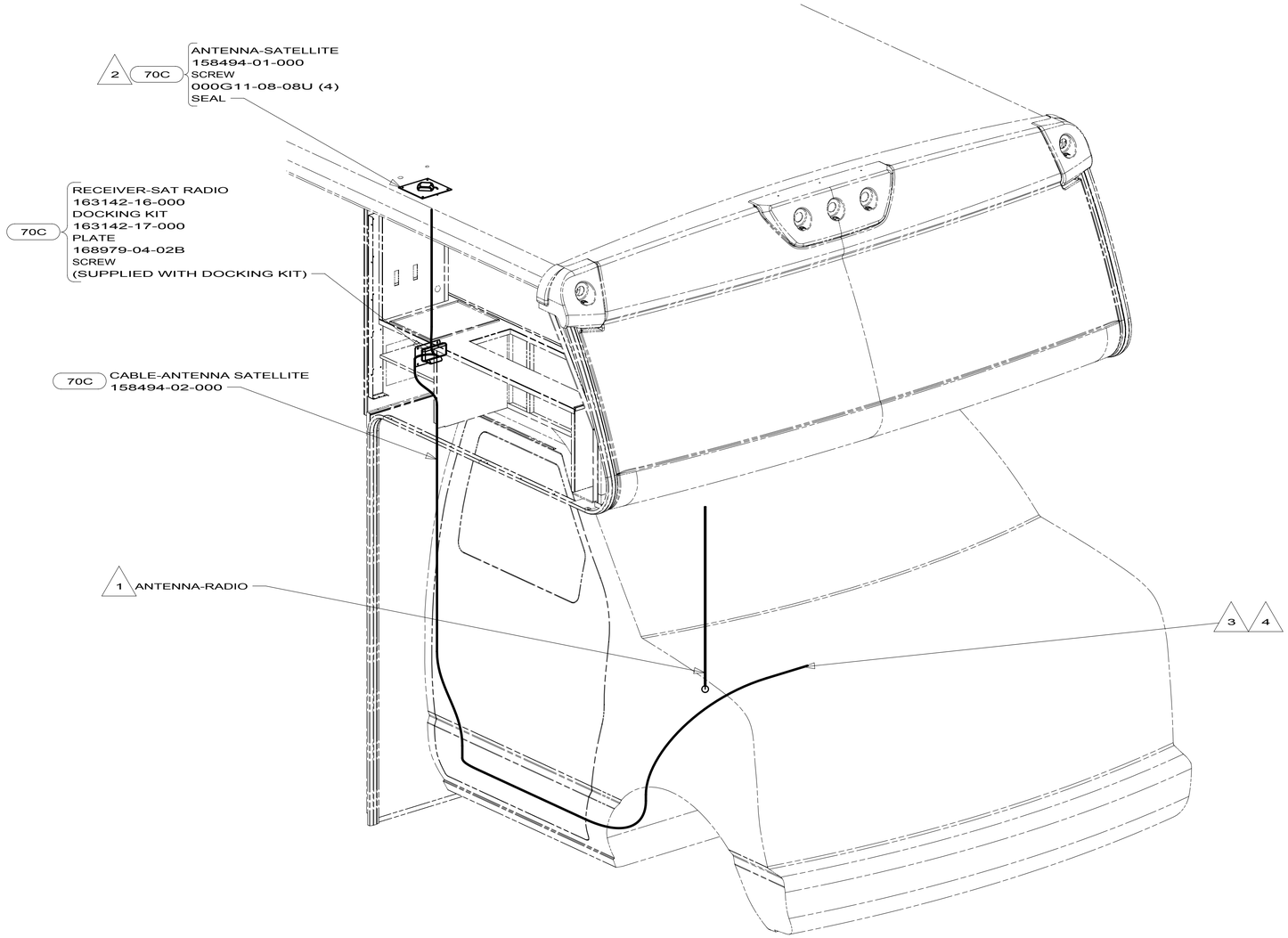

169848-01
200-SERIES

169848-02
300-SERIES

4 ON 300-SERIES ROUTE CABLE FROM RADIO TO PASSENGER'S STEPWELL AREA, UP B-POST, INTO WINGWALL,THROUGH SLEEP BOARD ASM, TO ENTERTAINMENT CENTER.

3 RECEIVER CABLE SUPPLIED WITH RECEIVER.

2 MOUNT ANTENNA SUCH THAT BASE IS SQUARE WITH ROOF AND HOLE IS DIRECTLY OVER HOLE IN ROOF. SEAL BOTH THE HOLE IN THE ROOF AND ANTENNA BASE AT SCREWS.

1 SUPPLIED WITH CHASSIS. USE SHORTEST SUPPLIED ANTENNA.

NOTES:

70C RADIO - SATELLITE

265 CODES/STANDARDS-CSA/CMVSS

1B1 CODES/STANDARDS USA

1B1 265

10 MOTORHOMES

FOR ELECTRICAL TORQUE SPECIFICATIONS SEE DWG NO. 128783-01-000

X-X FOR ELECTRICAL CALLOUTS SEE DWG NO. 121339-01-000

ANTENNA INSTL-RADIO AND CB

2 169848

2/11/2010

RELEASE	REV A	DATE	DWG NO 165465

REV	ZONE	REVISION RECORD	DATE	DFTR-ORIG

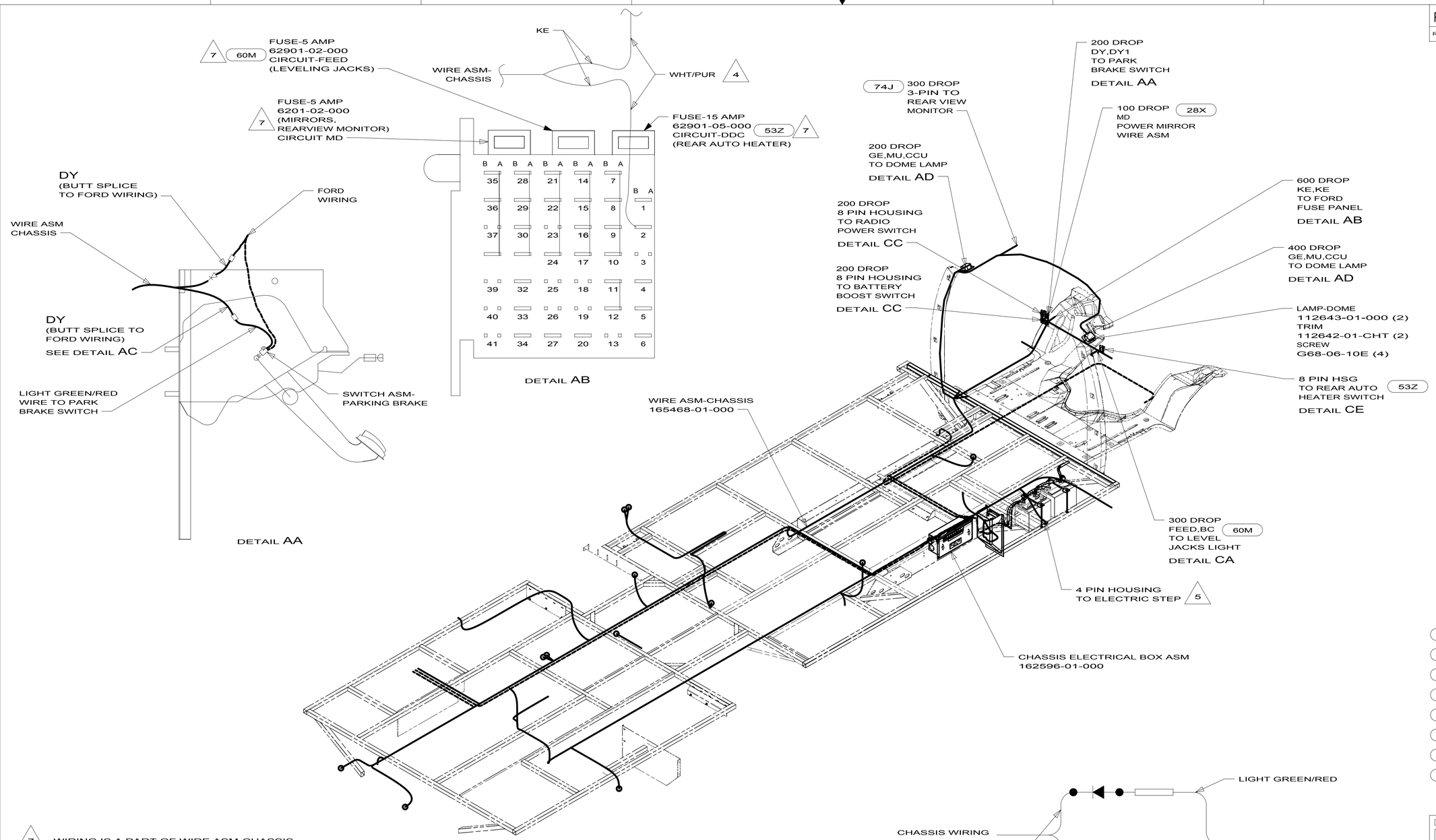

60M	HYDRAULIC LEVEL JACKS-AUTO
53Z	WTR HTR-6GAL/110/LP/MTR/AUTO
74J	REARVIEW MONITOR SYS W/AUDIO
28X	MIRRORS-EXTERIOR W/DEFROST
1E2	ENTRANCE STEP-ELEC.
16Y	FORD CHASSIS - 14,500#_GVWR
265	CODES/STANDARDS-CSA/CMVSS
1B1	CODES/STANDARDS USA

1B1 265 16Y

7 WIRING IS A PART OF WIRE ASM-CHASSIS.

6 CUT LIGHT GREEN/RED WIRE FROM PARK BRAKE SWITCH AND RECONNECT TO CIRCUIT DY OF CHASSIS ASM AS SHOWN.

5 SECURE DROP BACK ALONG RAIL WITHOUT 1E2

4 CUT WIRE AND RECONNECT AS SHOWN.

3. USE WIRE TIES 8343-04-000 AND 116673-01-000 APPROXIMATELY 600MM ON CENTER UNLESS OTHERWISE SPECIFIED.

2. SECURE CONDUIT 41953, TAB AS REQUIRED, OVER ALL WIRES IN CONTACT WITH SHARP EDGES.

1. LEGEND: WINNEBAGO: CABLE: CHASSIS SUPPLIED WIRING.

NOTES:

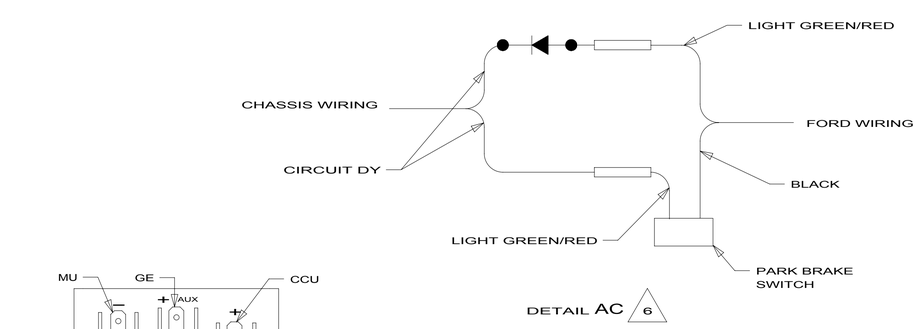

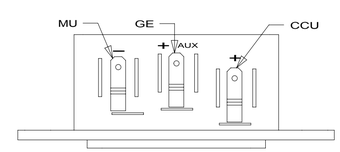

FOR ELECTRICAL TORQUE SPECIFICATIONS SEE DWG NO. 128783-01-000

X-X FOR ELECTRICAL CALLOUTS SEE DWG NO. 121339-01-000

COPYRIGHT 2009
WINNEBAGO
INDUSTRIES, INC.

WINNEBAGO INDUSTRIES

DFTR	ORIG. DATE
CHKR	ALL DIMENSIONS ARE IN MILLIMETERS
P.E.	
M.E.	FIRST USED
DSNR	09 331C

UNSPECIFIED TOLERANCES ARE:

WHOLE DIM (X)	±	3
ONE-PLACE (X.X)	±	1.5
TWO-PLACE (X.XX)	±	0.50
ANGLE	±	1°

MATERIAL:

THIRD ANGLE PROJECTION

DO NOT SCALE DRAWING

TITLE: WIRING INSTL-CHASSIS

SHEET 1 OF 3 | PART NO 165465 | REV

REF: 1

11/10/2009

DWG NO 165465

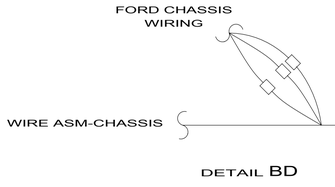

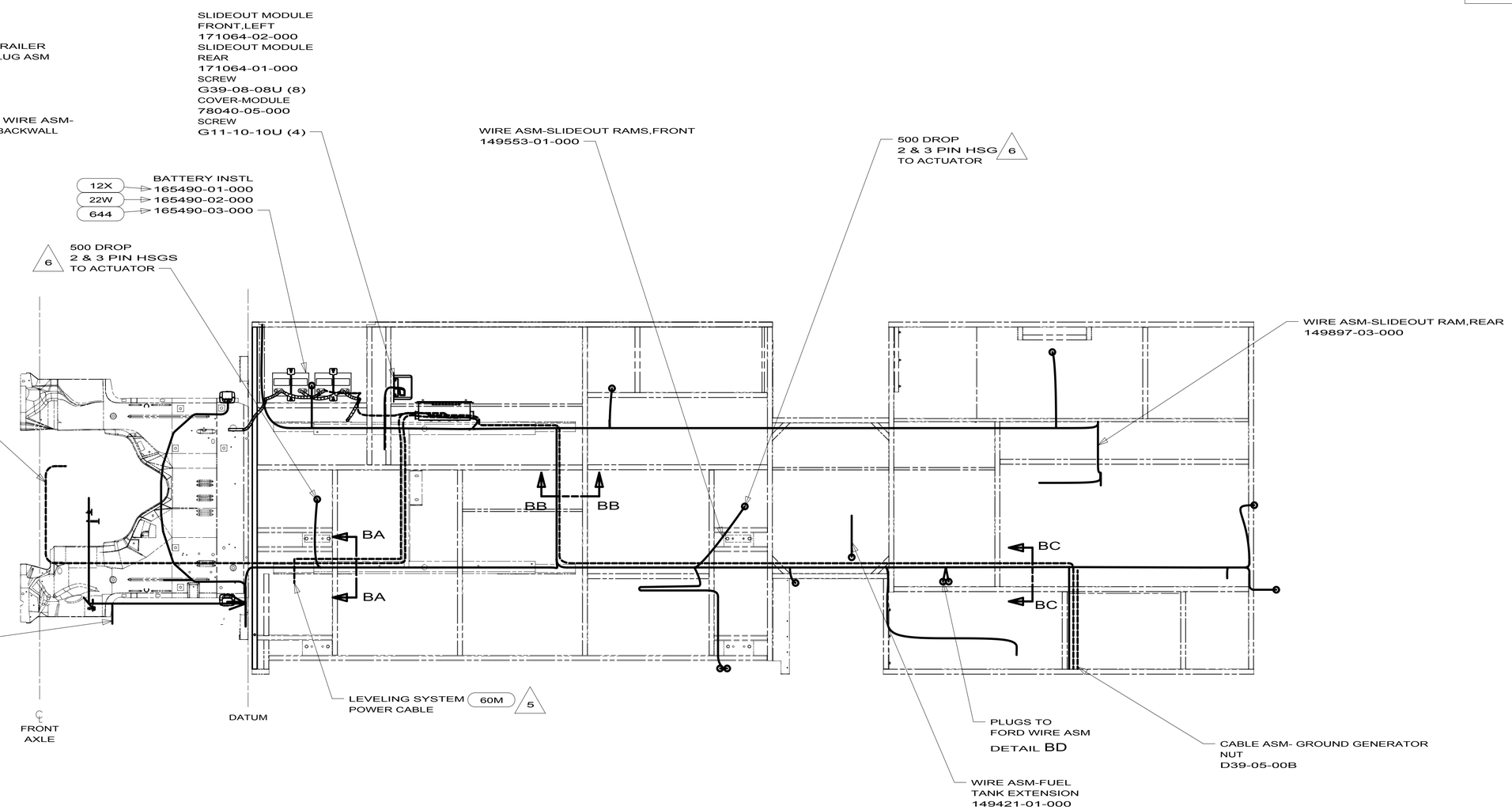

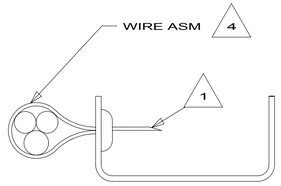

SECTION BA-BA
(OPPOSITE FOR RIGHT SIDE)

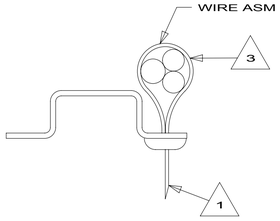

SECTION BB-BB

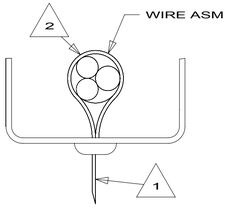

SECTION BC-BC

NOTES:

6 3 PIN HOUSING IS PART OF WIRE ASM-CHASSIS AND 2 PIN HOUSING IS PART OF WIRE ASM-SLIDEOUT RAMS,FRONT.

5 SEE BATTERY INSTL FOR ADDITIONAL INFORMATION.

4 WIRES TO BE TIED TO CROSS MEMBER USING EXISTING HOLES.

3 WIRES TO BE TIED TO TOP OF RAIL USING EXISTING HOLES.

2 WIRES TO BE TIED TO INSIDE OF RAIL USING EXISTING HOLES.

1 CUT OFF EXCESS END OF WIRE TIE.

644	GREAT ALASKAN RENTAL PACKAGE
60M	HYDRAULIC LEVEL JACKS-AUTO
22W	BATTERY-SECOND
12X	BATTERY-ONE
16Y	FORD CHASSIS - 14,500#_GVWR
265	CODES/STANDARDS-CSA/CMVSS
1B1	CODES/STANDARDS USA

1B1 265 16Y

FOR ELECTRICAL TORQUE SPECIFICATIONS SEE DWG NO. 128783-01-000

X-X FOR ELECTRICAL CALLOUTS SEE DWG NO. 121339-01-000

FIRST USED 09 331C

DO NOT SCALE DRAWING

TITLE: WIRING INSTL-CHASSIS

SHEET 2 PART NO 165465 REV

11/10/2009

DWG NO 165465

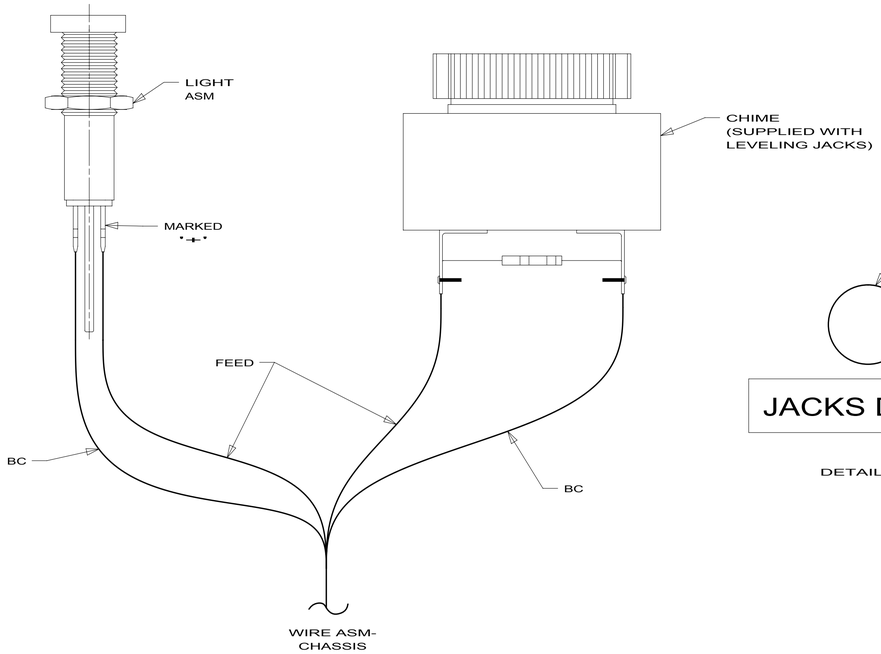

DETAIL CF

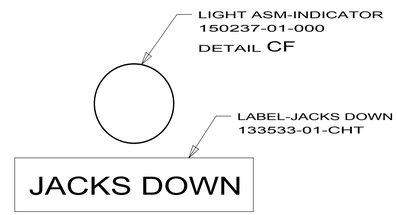

DETAIL CA

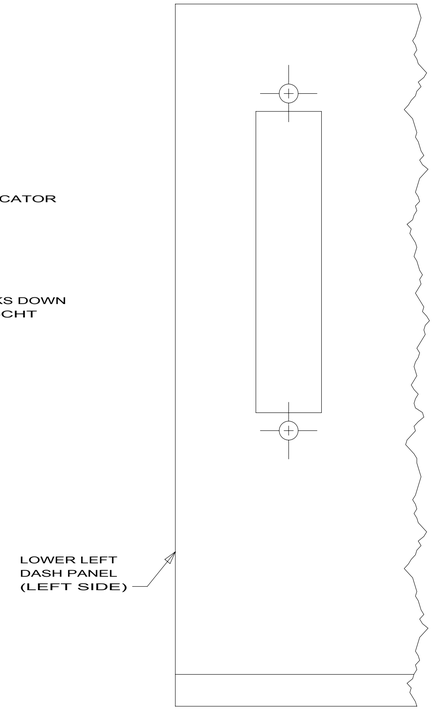

DETAIL CB 16Y

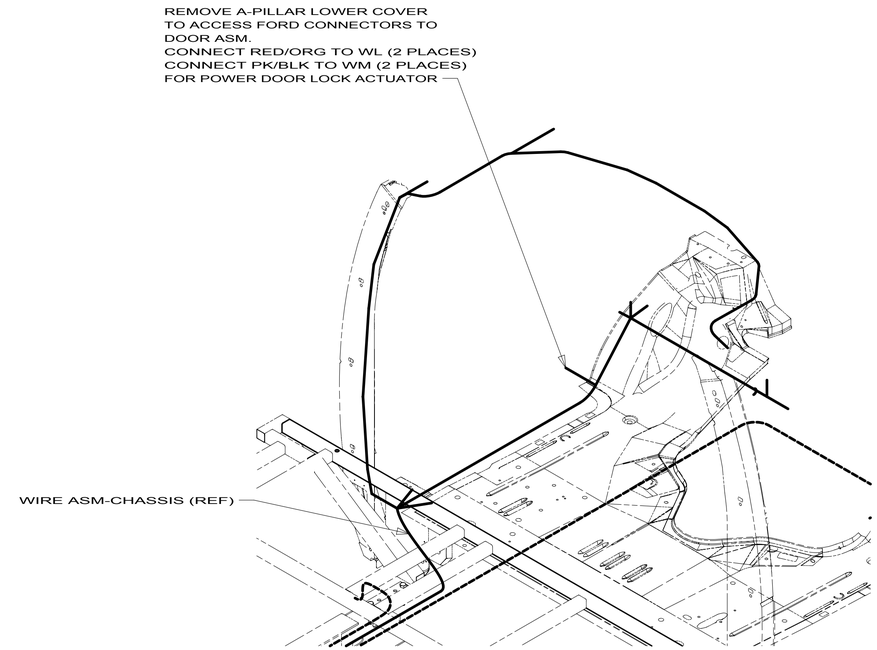

DETAIL CD 1 16Y

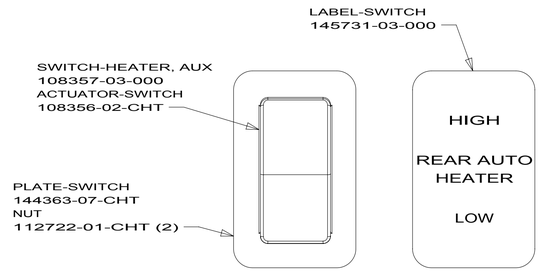

DETAIL CE 53Z 16Y 3

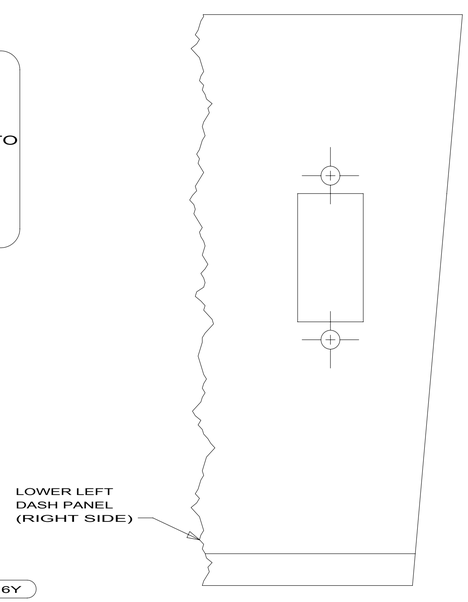

DETAIL CG 16Y 53Z

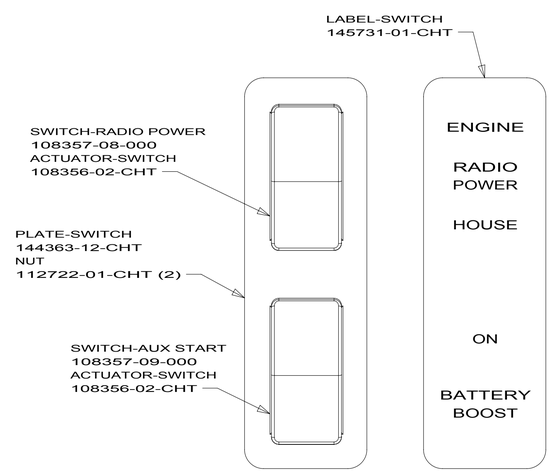

DETAIL CC 16Y 4

NOTES:

4 SEE DETAIL CB FOR CUTOUT INFORMATION.

3 SEE DETAIL CG FOR CUTOUT INFORMATION WITH 16Y

2 THIS CUTOUT USED ONLY WITH 53Z

1 WITH OPTION 644 DO NOT CONNECT POWER DOOR LOCK WIRES. TIE WL & WM BACK TO MAIN HARNESS.

53Z	WTR HTR-6GAL/110/LP/MTR/AUTO
644	GREAT ALASKAN RENTAL PACKAGE
16Y	FORD CHASSIS - 14,500#_GVWR
265	CODES/STANDARDS-CSA/CMVSS
1B1	CODES/STANDARDS USA

1B1 265

FOR ELECTRICAL TORQUE SPECIFICATIONS SEE DWG NO. 128783-01-000

X-X FOR ELECTRICAL CALLOUTS SEE DWG NO. 121339-01-000

FIRST USED 09 331C

DO NOT SCALE DRAWING

TITLE: WIRING INSTL-CHASSIS

SHEET 3 PART NO 165465 REV

11/10/2009

RELEASE	REV A	DATE	DWG NO 170102

REV	ZONE	REVISION RECORD	DATE	DFTR-ORIG

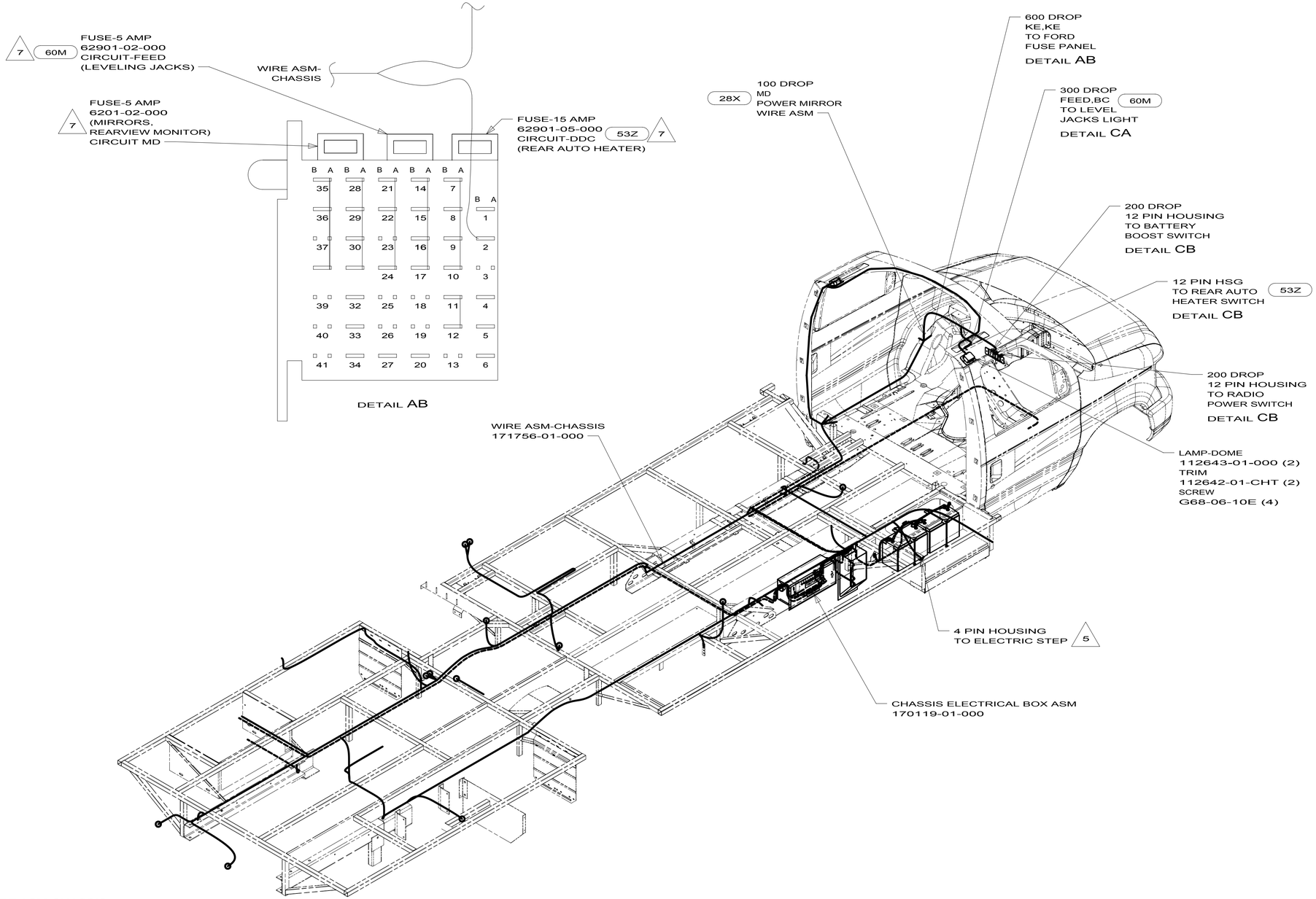

60M	HYDRAULIC LEVEL JACKS-AUTO
53Z	WTR HTR-6GAL/110/LP/MTR/AUTO
28X	MIRRORS-EXTERIOR W/DEFROST
1E2	ENTRANCE STEP-ELEC.
16Y	FORD CHASSIS - 14,500#_GVWR
265	CODES/STANDARDS-CSA/CMVSS
1B1	CODES/STANDARDS USA

1B1 265 16Y

7 WIRING IS A PART OF WIRE ASM-CHASSIS.

5 SECURE DROP BACK ALONG RAIL WITHOUT 1E2

3. USE WIRE TIES 8343-04-000 AND 116673-01-000 APPROXIMATELY 600MM ON CENTER UNLESS OTHERWISE SPECIFIED.

2. SECURE CONDUIT 41953, TAB AS REQUIRED, OVER ALL WIRES IN CONTACT WITH SHARP EDGES.

1. LEGEND: WINNEBAGO CABLE: CHASSIS SUPPLIED WIRING.

NOTES:

FOR ELECTRICAL TORQUE SPECIFICATIONS SEE DWG NO. 128783-01-000

X-X FOR ELECTRICAL CALLOUTS SEE DWG NO. 121339-01-000

WINNEBAGO INDUSTRIES

COPYRIGHT 2009
WINNEBAGO
INDUSTRIES, INC.

DFTR	ORIG. DATE
CHKR	ALL DIMENSIONS ARE IN MILLIMETERS
P.E.	
M.E.	FIRST USED
DSNR	10 331C

UNSPECIFIED TOLERANCES ARE:

WHOLE DIM (X)	±	3
ONE-PLACE (X.X)	±	1.5
TWO-PLACE (X.XX)	±	0.50
ANGLE	±	1°

MATERIAL:

THIRD ANGLE PROJECTION

DO NOT SCALE DRAWING

TITLE: WIRING INSTL-CHASSIS

SHEET 1 OF 3 | PART NO 170102 | REV

REF: 1

DWG NO 170102

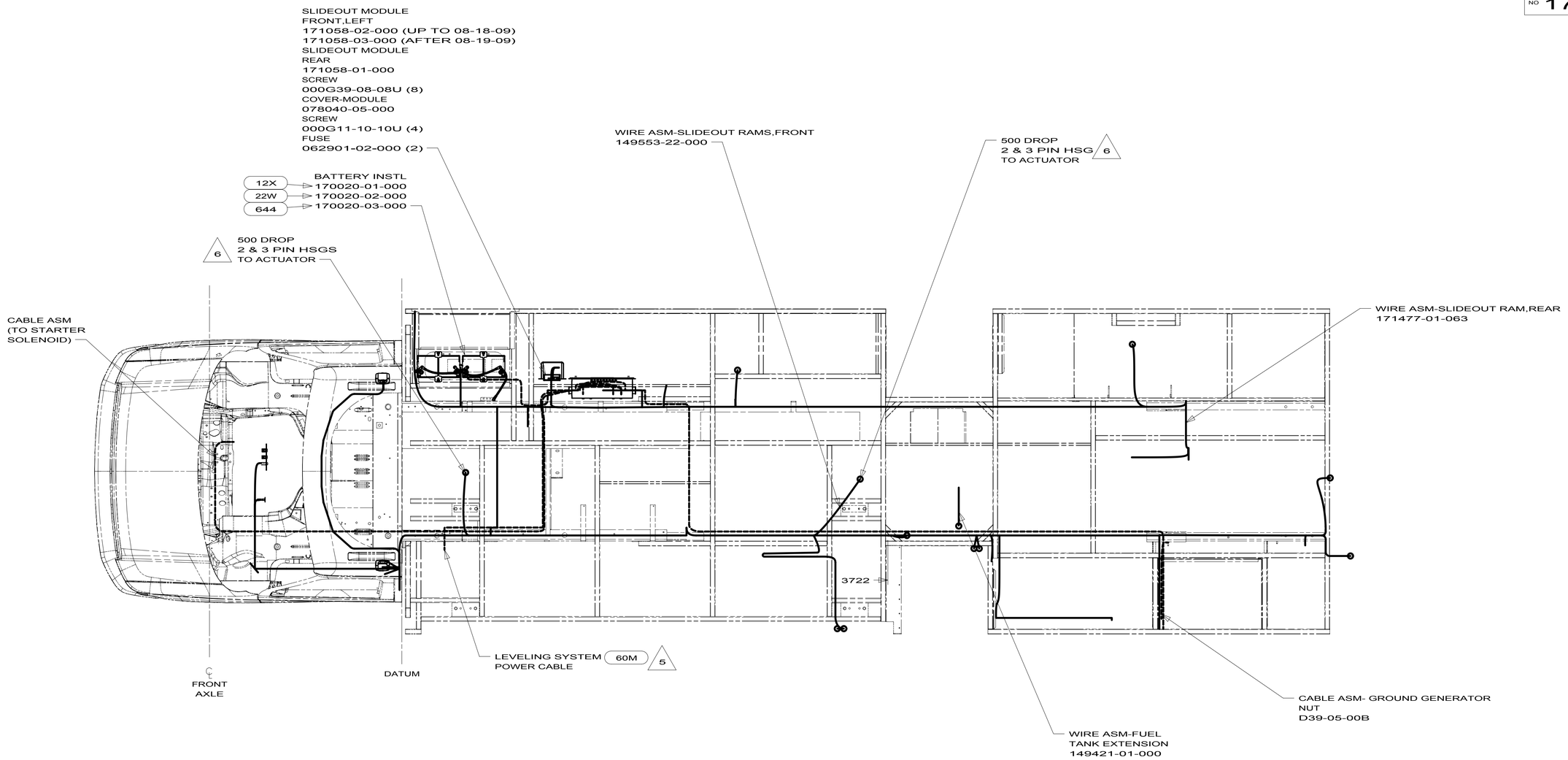

644	GREAT ALASKAN RENTAL PACKAGE
60M	HYDRAULIC LEVEL JACKS-AUTO
22W	BATTERY-SECOND
12X	BATTERY-ONE
16Y	FORD CHASSIS - 14,500#_GVWR
265	CODES/STANDARDS-CSA/CMVSS
1B1	CODES/STANDARDS USA

1B1 265 16Y

6 3 PIN HOUSING IS PART OF WIRE ASM-CHASSIS AND 2 PIN HOUSING IS PART OF WIRE ASM-SLIDEOUT RAMS,FRONT.

5 SEE BATTERY INSTL FOR ADDITIONAL INFORMATION.

NOTES:

FOR ELECTRICAL TORQUE SPECIFICATIONS SEE DWG NO. 128783-01-000

X-X FOR ELECTRICAL CALLOUTS SEE DWG NO. 121339-01-000

FIRST USED 10 331C

DO NOT SCALE DRAWING

TITLE: WIRING INSTL-CHASSIS

SHEET 2 | PART NO 170102 | REV

DWG NO 170102

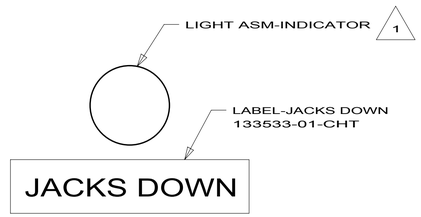

DETAIL CA 60M

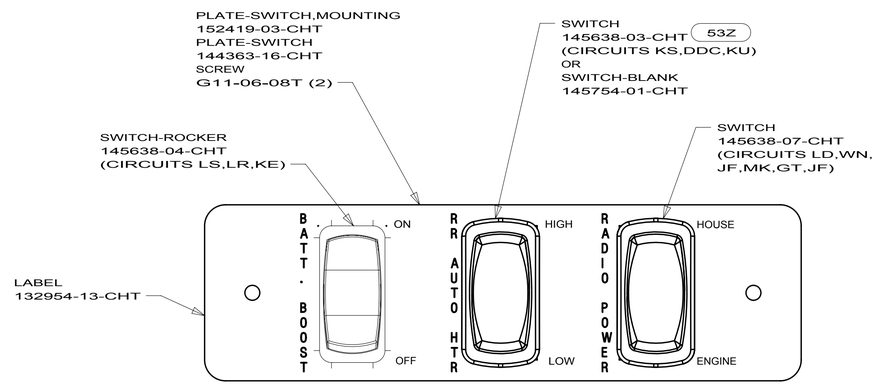

DETAIL CB

60M HYDRAULIC LEVEL JACKS-AUTO

53Z WTR HTR-6GAL/110/LP/MTR/AUTO

16Y FORD CHASSIS - 14,500#_GVWR

265 CODES/STANDARDS-CSA/CMVSS

1B1 CODES/STANDARDS USA

1B1 265

1 LAMP SUPPLIED WITH LEVELING SYSTEM.

NOTES:

FOR ELECTRICAL TORQUE SPECIFICATIONS SEE DWG NO. 128783-01-000

X-X FOR ELECTRICAL CALLOUTS SEE DWG NO. 121339-01-000

FIRST USED 10 331C

DO NOT SCALE DRAWING

TITLE: WIRING INSTL-CHASSIS

SHEET 3 PART NO 170102 REV

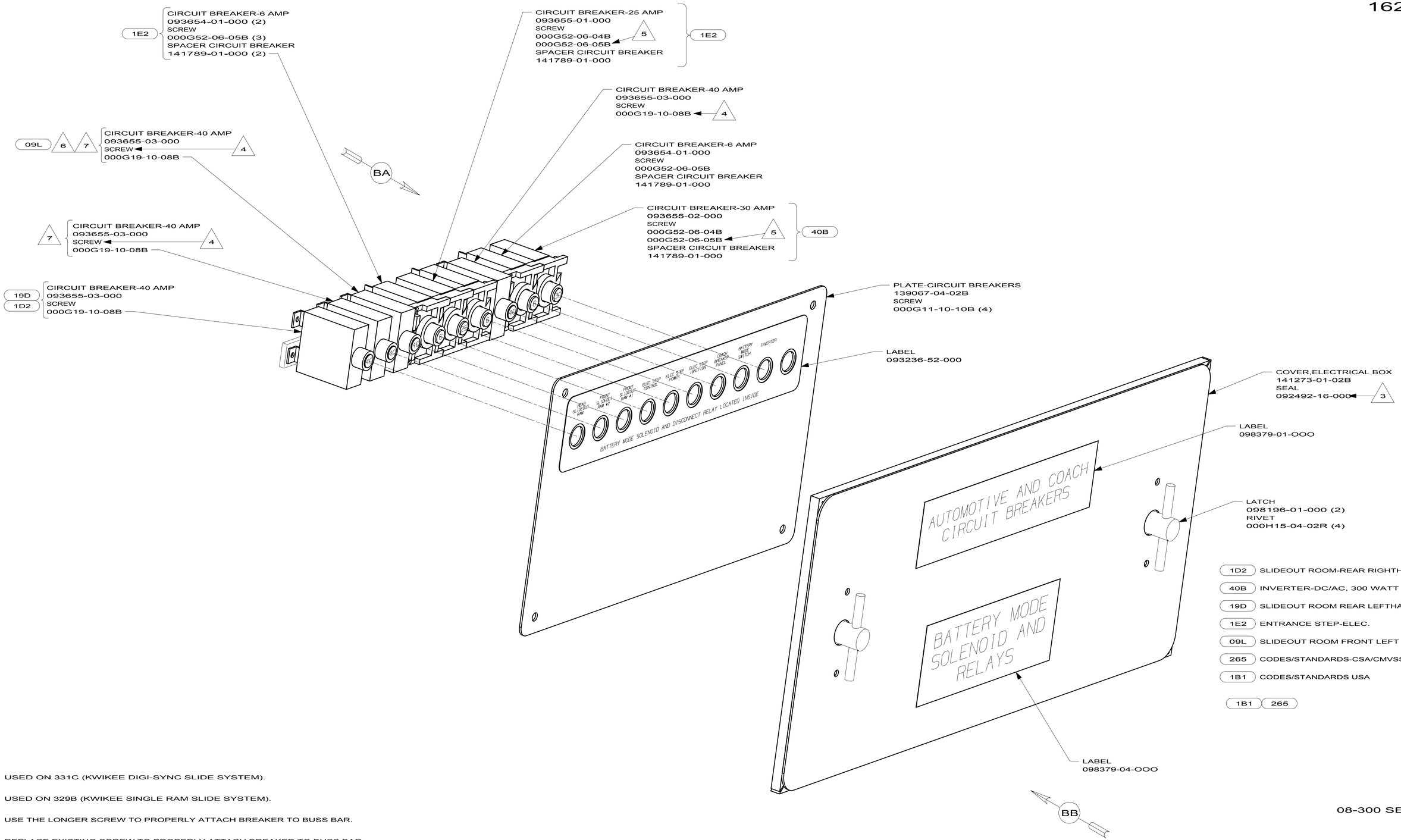

1D2	SLIDEOUT ROOM-REAR RIGHTHAND
40B	INVERTER-DC/AC, 300 WATT
19D	SLIDEOUT ROOM REAR LEFTHAND
1E2	ENTRANCE STEP-ELEC.
09L	SLIDEOUT ROOM FRONT LEFT
265	CODES/STANDARDS-CSA/CMVSS
1B1	CODES/STANDARDS USA

1B1 265

08-300 SERIES

NOTES:

7. USED ON 331C (KWIKEE DIGI-SYNC SLIDE SYSTEM).
6. USED ON 329B (KWIKEE SINGLE RAM SLIDE SYSTEM).
5. USE THE LONGER SCREW TO PROPERLY ATTACH BREAKER TO BUSS BAR.
4. REPLACE EXISTING SCREW TO PROPERLY ATTACH BREAKER TO BUSS BAR.
3. PLACE AROUND ENTIRE PERIMETER OF DOOR WITH SEAM AT THE BOTTOM.
2. SECURE CONDUIT 041953, TAB AS REQUIRED, OVER ALL WIRES IN CONTACT WITH SHARP EDGES.
1. SPACER NOT REQUIRED ON 40 AMP BREAKER.

FOR ELECTRICAL TORQUE SPECIFICATIONS SEE DWG NO. 128783-01-000	X-X FOR ELECTRICAL CALLOUTS SEE DWG NO. 121339-01-000

CHASSIS ELECTRICAL BOX ASM

1 2 162596

2/11/2010

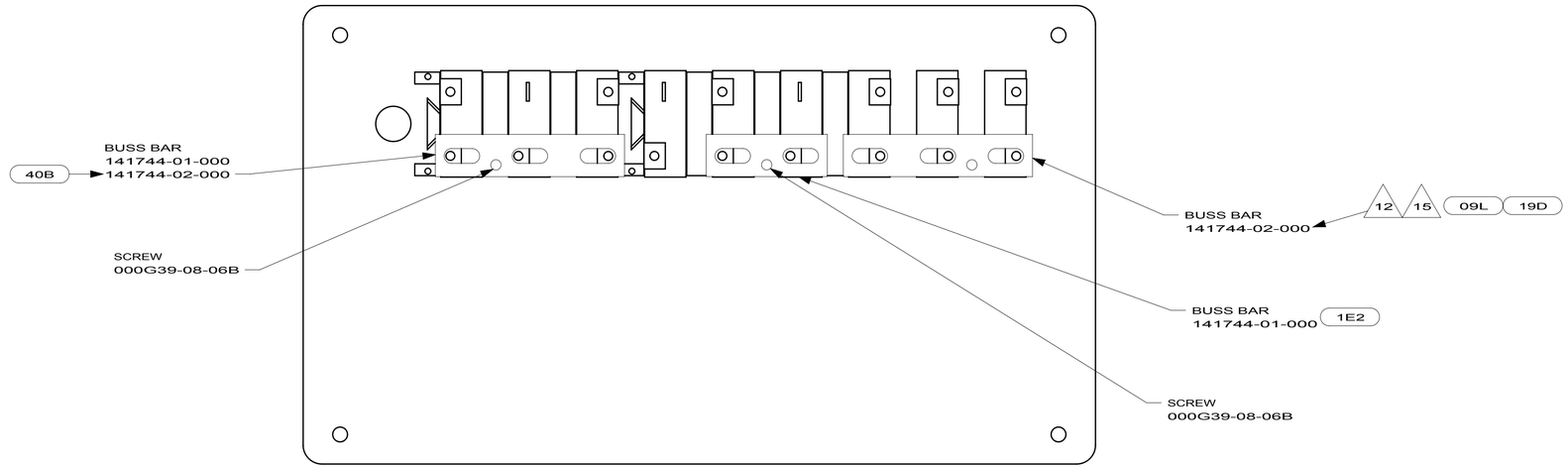

VIEW BA 4

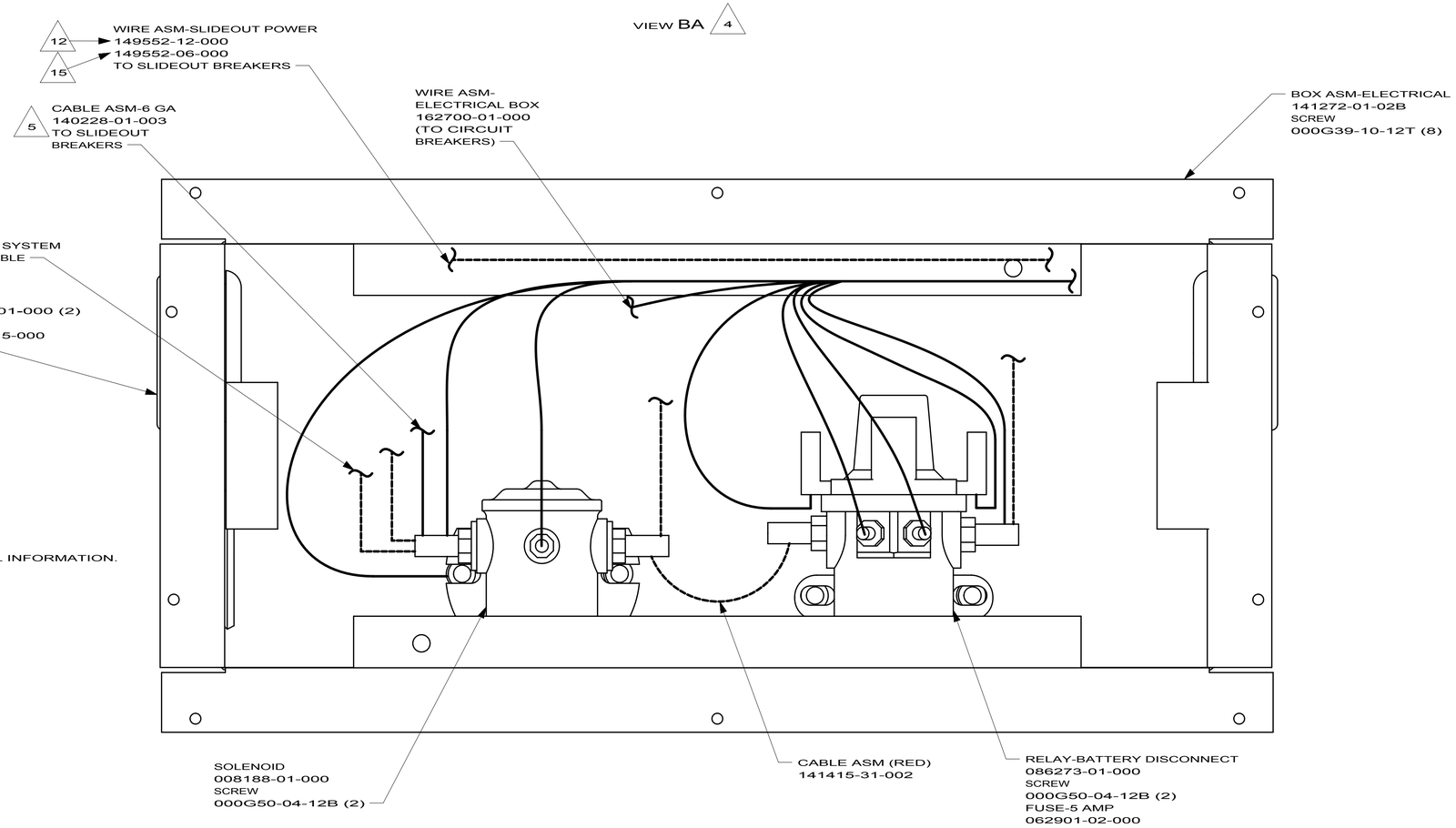

VIEW BB 4

15 USED ON 331C ONLY.

12 USED ON 329B ONLY.

10 SEE LEVELING SYSTEM INSTL FOR ADDITIONAL INFORMATION.

8 LOCATION OF GROMMET & PLUG DEPENDENT ON LOCATION OF BOX.

5 SEE WIRING INSTL-CHASSIS FOR ADDITIONAL INFORMATION.

4 TAPE BACK UNUSED WIRES TO HARNESS.

60M HYDRAULIC LEVEL JACKS-AUTO
40B INVERTER-DC/AC, 300 WATT
19D SLIDEOUT ROOM REAR LEFTHAND
1E2 ENTRANCE STEP-ELEC.
09L SLIDEOUT ROOM FRONT LEFT
265 CODES/STANDARDS-CSA/CMVSS
1B1 CODES/STANDARDS USA

1B1 265

NOTES:

1. LEGEND: WINNEBAGO CABLE: CHASSIS SUPPLIED WIRING.

FOR ELECTRICAL TORQUE SPECIFICATIONS SEE DWG NO. 128783-01-000	X-X FOR ELECTRICAL CALLOUTS SEE DWG NO. 121339-01-000

08-300 SERIES

CHASSIS ELECTRICAL BOX ASM

2 162596

2/11/2010

DRAWING NO.	FEATURES	SHEETS
165490-01	12X	1,2
165490-02	22W	1,3

RELEASE	REV A	DATE	DWG NO 165490
REV	ZONE	REVISION RECORD	DATE	DFTR-ORIG

		222B	224V	229T	231C	231J	231N	
CABLE ASM-STARTER (RED)	16B 16C 16Y	141415-34-056	141415-34-048	141415-34-056	141415-34-053	141415-34-052	141415-34-068	
	1PY	---------	141415-34-025	141415-34-029	141415-34-036	---------	---------	
CABLE ASM-COACH BATTERY (YEL)	16B 16C 16Y	141415-52-016	141415-52-012	141415-52-021	141415-52-016	141415-52-018	141415-52-024	
	1PY	---------	141415-52-012	141415-52-021	141415-52-016	---------	---------	
CABLE ASM-COACH BATTERY GND (BLK)	16B 16C 16Y	133566-12-008	133566-12-008	133566-12-009	133566-12-008	133566-12-008	133566-12-008	
	1PY	---------	133566-12-008	133566-12-009	133566-12-008	---------	---------	
CABLE ASM-GENERATOR (GRN)	16B 16C 16Y	141415-42-032	141415-42-032	141415-42-064	141415-42-068	141415-42-028	141415-42-050	1
	1PY	---------	141415-42-032	141415-42-064	141415-42-068	---------	---------	1
CABLE ASM-GENERATOR GND (BLK)	16B 16C 16Y	133566-11-008	133566-11-008	133566-11-008	133566-11-008	133566-11-008	133566-11-008	1
	1PY	---------	133566-11-008	133566-11-008	133566-11-008	---------	---------	1

		329B	330D	331C	
CABLE ASM-STARTER (RED)	16Y	141415-34-056	141415-34-050	141415-34-049	
	1PY	141415-34-029	----------	141415-34-032	
CABLE ASM-COACH BATTERY (YEL)	16Y	141415-52-021	141415-52-017	141415-52-016	
	1PY	141415-52-021	----------	141415-52-016	
CABLE ASM-COACH BATTERY GND (BLK)	16Y	133566-12-007	133566-12-008	133566-12-006	
	1PY	133566-12-007	----------	133566-12-006	
CABLE ASM-GENERATOR (GRN)	16Y	141415-42-044	141415-42-077	141415-42-068	1
	1PY	141415-42-044	----------	141415-42-068	1
CABLE ASM-GENERATOR GND (BLK)	16Y	133566-11-008	133566-11-008	133566-11-008	1
	1PY	133566-11-008	----------	133566-11-008	1
LEVELING SYSTEM POWER CABLE (BLU)	60M	141415-22-045	141415-22-022	141415-22-025	2

		728B	730C	
CABLE ASM-STARTER (RED)	16Y	141415-34-057	141415-34-053	
CABLE ASM-COACH BATTERY (YEL)	16Y	141415-52-020	141415-52-020	
CABLE ASM-COACH BATTERY GND (BLK)	16Y	133566-12-008	133566-12-008	
CABLE ASM-GENERATOR (GRN)	16Y	141415-42-024	141415-42-075	1
CABLE ASM-GENERATOR GND (BLK)	16Y	133566-11-008	133566-11-008	1
LEVELING SYSTEM POWER CABLE (BLU)	60M	141415-22-010	141415-22-011	2

2 SEE LEVELING SYSTEM INSTL FOR ADDIDTIONAL INFORMATION.

1 ROUTING OF CABLES SHOWN ON WIRING INSTL-CHASSIS ONLY.

NOTES:

FOR ELECTRICAL TORQUE SPECIFICATIONS SEE DWG NO. 128783-01-000

X-X FOR ELECTRICAL CALLOUTS SEE DWG NO. 121339-01-000

60M HYDRAULIC LEVEL JACKS-AUTO
644 GREAT ALASKAN RENTAL PACKAGE
22W BATTERY-SECOND
12X BATTERY-ONE
1PY CHEVY CHASSIS 14,050 LB GVWR
16Y FORD CHASSIS - 14,500#
16C FORD CHASSIS 11,500 LB.GVWR
16B FORD CHASSIS 10,700 LB.GVWR
265 CODES/STANDARDS-CSA/CMVSS
1B1 CODES/STANDARDS USA

1B1 265

WINNEBAGO INDUSTRIES

COPYRIGHT 2009
WINNEBAGO
INDUSTRIES, INC.

DFTR | ORIG. DATE
CHKR | ALL DIMENSIONS ARE IN MILLIMETERS
P.E.
M.E. | FIRST USED
DSNR | 09 200/300/700 SER

UNSPECIFIED TOLERANCES ARE:
WHOLE DIM (X) :
ONE-PLACE (X.X) :
TWO-PLACE (X.XX) :
ANGLE :
THIRD ANGLE PROJECTION

MATERIAL:

DO NOT SCALE DRAWING

TITLE: BATTERY INSTL

SHEET 1 OF 3 | PART NO 165490 | REV

REF: 1

DWG NO 165490

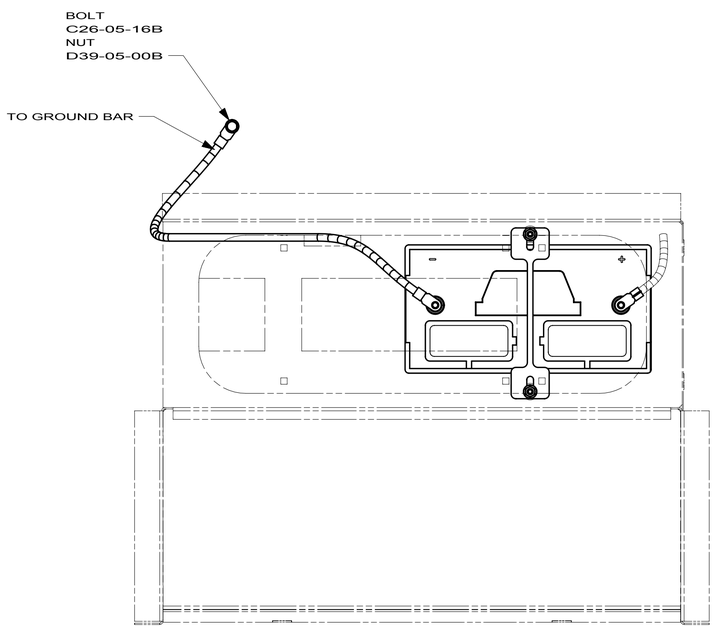

VIEW BA

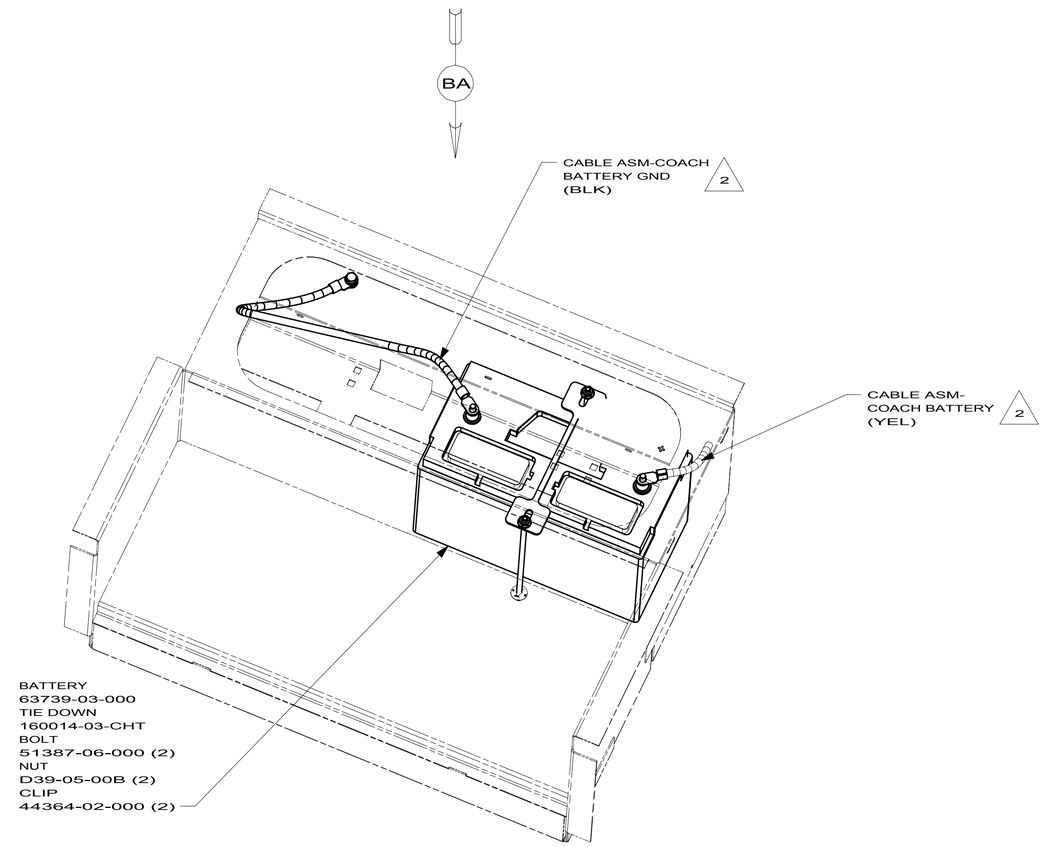

BATTERY BOX

12X BATTERY-ONE

265 CODES/STANDARDS-CSA/CMVSS

1B1 CODES/STANDARDS USA

1B1 265 12X

2 BATTERY CABLES ARE NOT TO BE ROUTED OVER BATTERY FILL CAPS.

1. SEE WIRING INSTL-CHASSIS FOR ADDITIONAL INFORMATION.

NOTES:

FOR ELECTRICAL TORQUE SPECIFICATIONS SEE DWG NO. 128783-01-000

X-X FOR ELECTRICAL CALLOUTS SEE DWG NO. 121339-01-000

FIRST USED 09 200/300/700 SER

DO NOT SCALE DRAWING

TITLE: BATTERY INSTL

SHEET 2 | PART NO 165490 | REV

DWG NO 165490

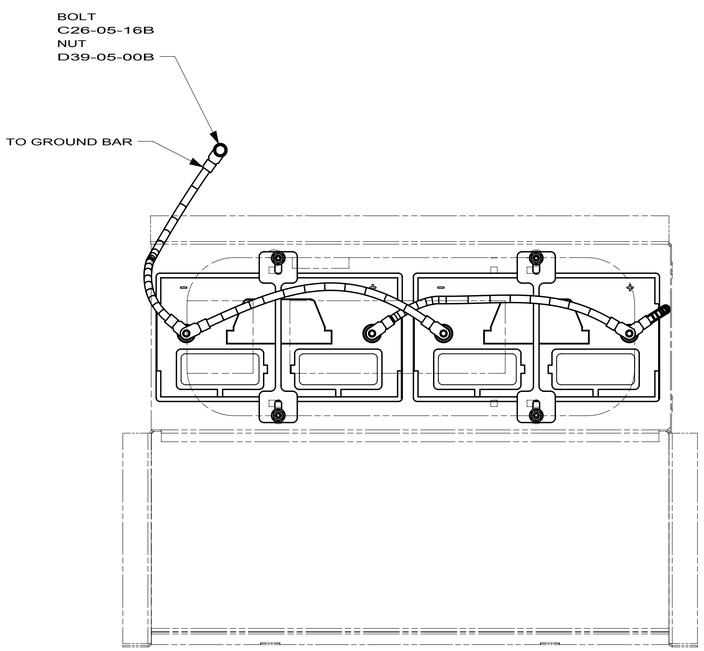

VIEW CA 2 3

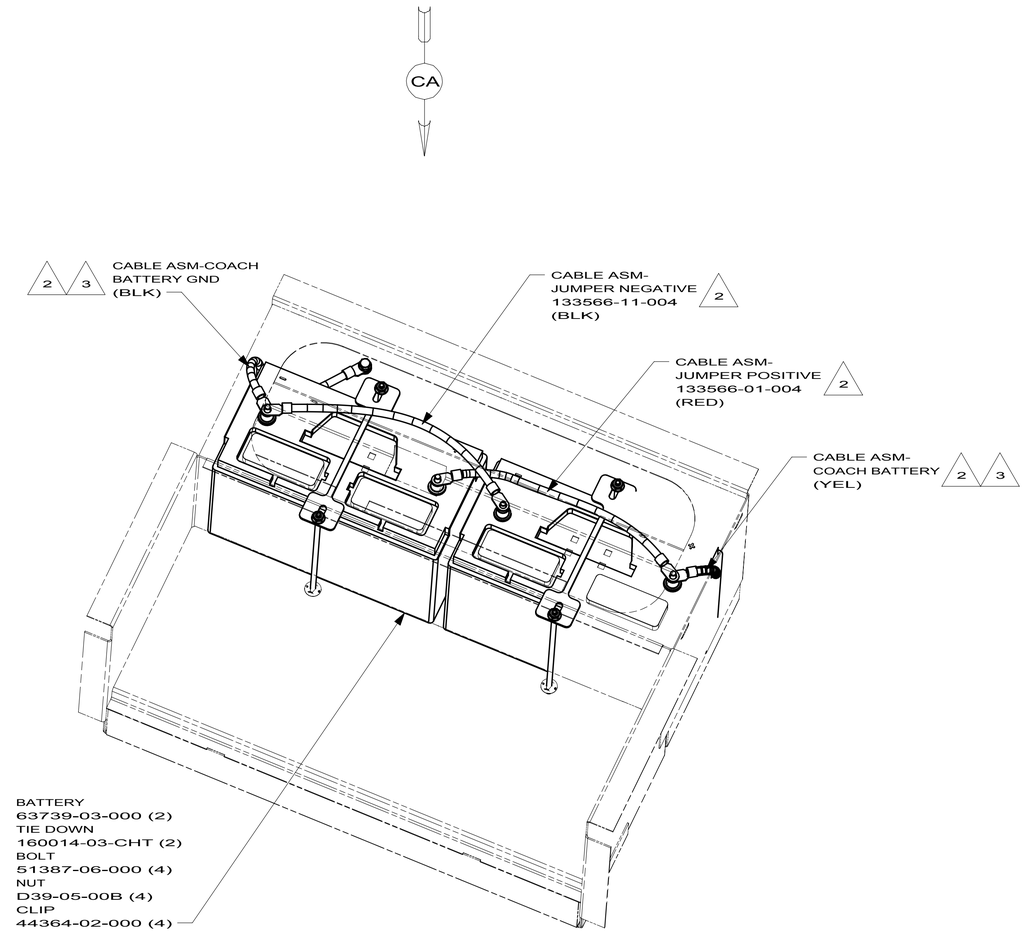

BATTERY BOX

22W BATTERY-SECOND

265 CODES/STANDARDS-CSA/CMVSS

1B1 CODES/STANDARDS USA

1B1 265 22W

3 THE POSITIVE AND NEGATIVE BATTERY CABLES ARE TO BE TERMINATED ON OPPOSITE BATTERIES.

2 BATTERY CABLES ARE NOT TO BE ROUTED OVER BATTERY FILL CAPS.

1. SEE WIRING INSTL-CHASSIS FOR ADDITIONAL INFORMATION.

NOTES:

FOR ELECTRICAL TORQUE SPECIFICATIONS SEE DWG NO. 128783-01-000

X-X FOR ELECTRICAL CALLOUTS SEE DWG NO. 121339-01-000

FIRST USED 09 200/300/700 SER

DO NOT SCALE DRAWING

TITLE: BATTERY INSTL

SHEET 3 PART NO 165490 REV

DRAWING NO.	FEATURES	SHEETS
170020-01	12X	1,2
170020-02	22W	1,3

RELEASE	REV A	DATE	DWG NO 170020
REV	ZONE	REVISION RECORD	DATE	DFTR-ORIG

		224V	229T	231C	231J	231N
CABLE ASM-STARTER (RED)	16B 16C 16Y	141415-34-048	141415-34-048	141415-34-053	141415-34-052	141415-34-068
CABLE ASM-COACH BATTERY (YEL)	16B 16C 16Y	141415-52-012	141415-52-021	141415-52-016	141415-52-018	141415-52-024
CABLE ASM-COACH BATTERY GND (BLK)	16B 16C 16Y	133566-12-008	133566-12-009	133566-12-008	133566-12-008	133566-12-008
CABLE ASM-GENERATOR (GRN)	16B 16C 16Y	141415-42-032	141415-42-065	141415-42-068	141415-42-028	141415-42-050
CABLE ASM-GENERATOR GND (BLK)	16B 16C 16Y	133566-11-008	133566-11-008	133566-11-008	133566-11-008	133566-11-008

		329B		331C	
CABLE ASM-STARTER (RED)	16Y	141415-34-056		141415-34-052	
CABLE ASM-COACH BATTERY (YEL)	16Y	141415-52-021		141415-52-020	
CABLE ASM-COACH BATTERY GND (BLK)	16Y	133566-12-007		133566-12-006	
CABLE ASM-GENERATOR (GRN)	16Y	141415-42-044		141415-42-066	1
CABLE ASM-GENERATOR GND (BLK)	16Y	133566-11-008		133566-11-008	1
LEVELING SYSTEM POWER CABLE (BLU)	60M	141415-22-045		141415-22-030	2

		728B	730C	
CABLE ASM-STARTER (RED)	16Y	141415-34-057	141415-34-053	
CABLE ASM-COACH BATTERY (YEL)	16Y	141415-52-020	141415-52-020	
CABLE ASM-COACH BATTERY GND (BLK)	16Y	133566-12-008	133566-12-008	
CABLE ASM-GENERATOR (GRN)	16Y	141415-42-024	141415-42-075	1
CABLE ASM-GENERATOR GND (BLK)	16Y	133566-11-008	133566-11-008	1
LEVELING SYSTEM POWER CABLE (BLU)	60M	141415-22-010	141415-22-011	2

2 SEE LEVELING SYSTEM INSTL FOR ADDIDTIONAL INFORMATION.

1 ROUTING OF CABLES SHOWN ON WIRING INSTL-CHASSIS ONLY.

NOTES:

60M	HYDRAULIC LEVEL JACKS-AUTO
644	GREAT ALASKAN RENTAL PACKAGE
22W	BATTERY-SECOND
12X	BATTERY-ONE
16Y	FORD CHASSIS - 14,500#
16C	FORD CHASSIS 11,500 LB.GVWR
16B	FORD CHASSIS 10,700 LB.GVWR
265	CODES/STANDARDS-CSA/CMVSS
1B1	CODES/STANDARDS USA

1B1 265

FOR ELECTRICAL TORQUE SPECIFICATIONS SEE DWG NO. 128783-01-000

X-X FOR ELECTRICAL CALLOUTS SEE DWG NO. 121339-01-000

WINNEBAGO INDUSTRIES

COPYRIGHT 2009 WINNEBAGO INDUSTRIES, INC.

DFTR | ORIG. DATE
CHKR | ALL DIMENSIONS ARE IN MILLIMETERS
P.E.
M.E. | FIRST USED
DSNR | 10 200/300/700 SER

UNSPECIFIED TOLERANCES ARE:
WHOLE DIM (X) :
ONE-PLACE (X.X) :
TWO-PLACE (X.XX) :
ANGLE :

MATERIAL:

THIRD ANGLE PROJECTION

DO NOT SCALE DRAWING

TITLE: BATTERY INSTL

SHEET 1 OF 3 | PART NO 170020 | REV

REF: 1

DWG NO 170020

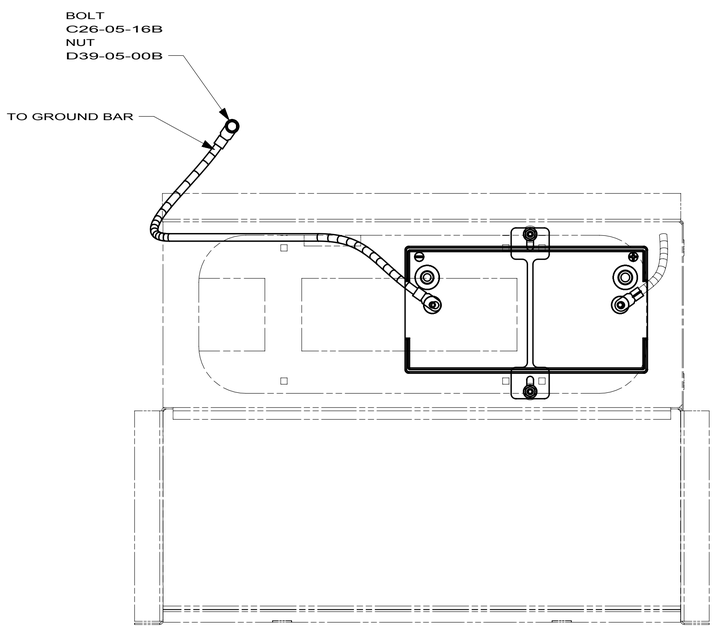

VIEW BA

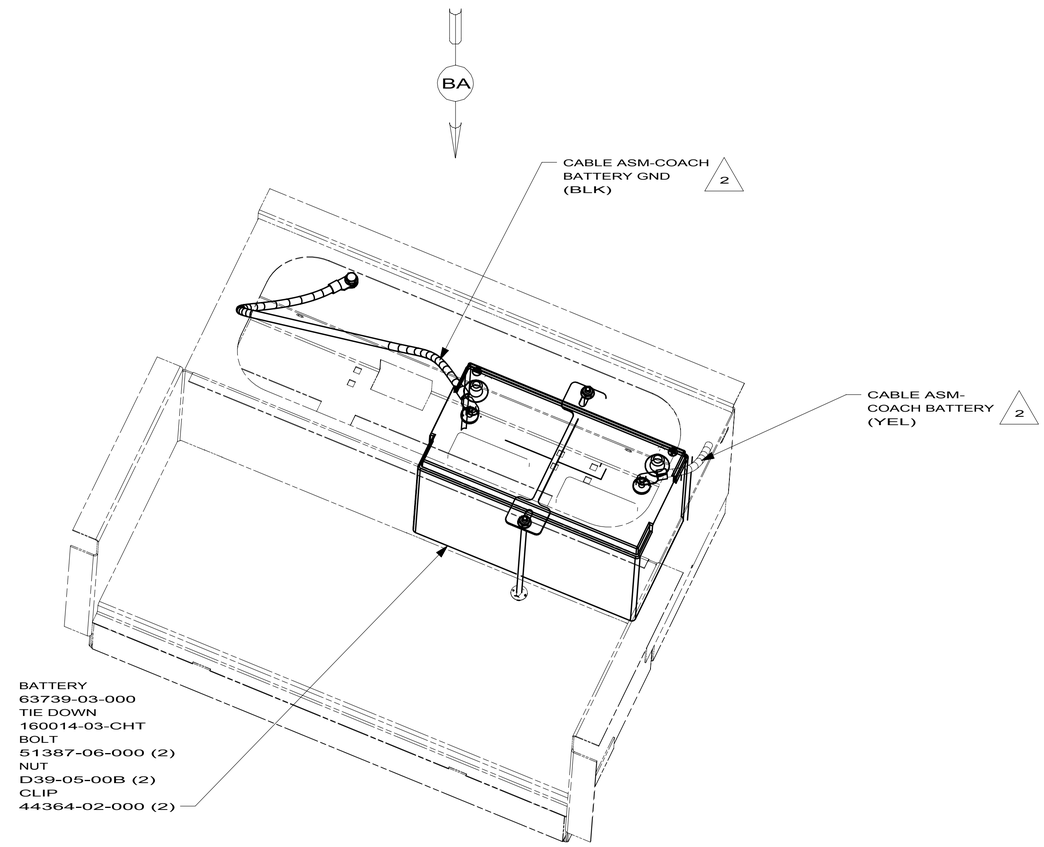

BATTERY BOX

12X BATTERY-ONE

265 CODES/STANDARDS-CSA/CMVSS

1B1 CODES/STANDARDS USA

1B1 265 12X

2 BATTERY CABLES ARE NOT TO BE ROUTED OVER BATTERY FILL CAPS.

1. SEE WIRING INSTL-CHASSIS FOR ADDITIONAL INFORMATION.

NOTES:

FOR ELECTRICAL TORQUE SPECIFICATIONS SEE DWG NO. 128783-01-000

X-X FOR ELECTRICAL CALLOUTS SEE DWG NO. 121339-01-000

FIRST USED
10 200/300/700 SER

DO NOT SCALE DRAWING

TITLE:
BATTERY INSTL

SHEET 2 | PART NO 170020 | REV

DWG NO 170020

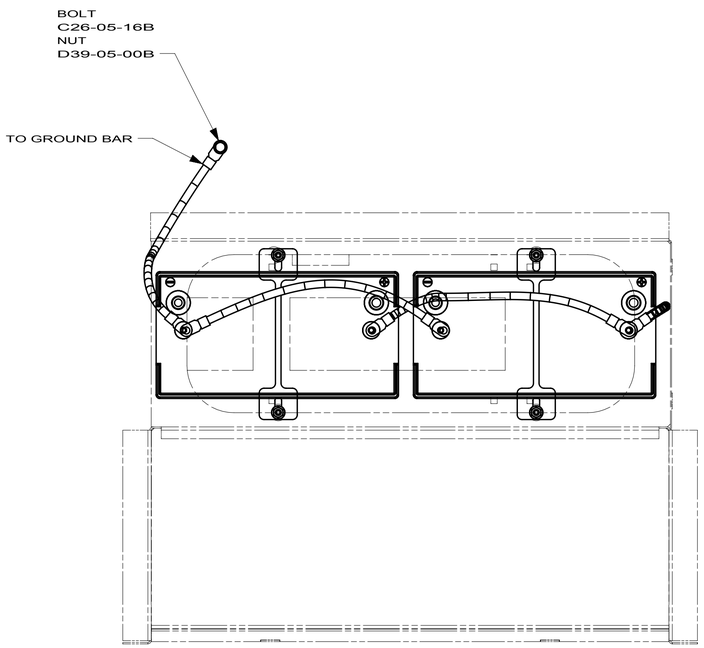

VIEW CA 2 3

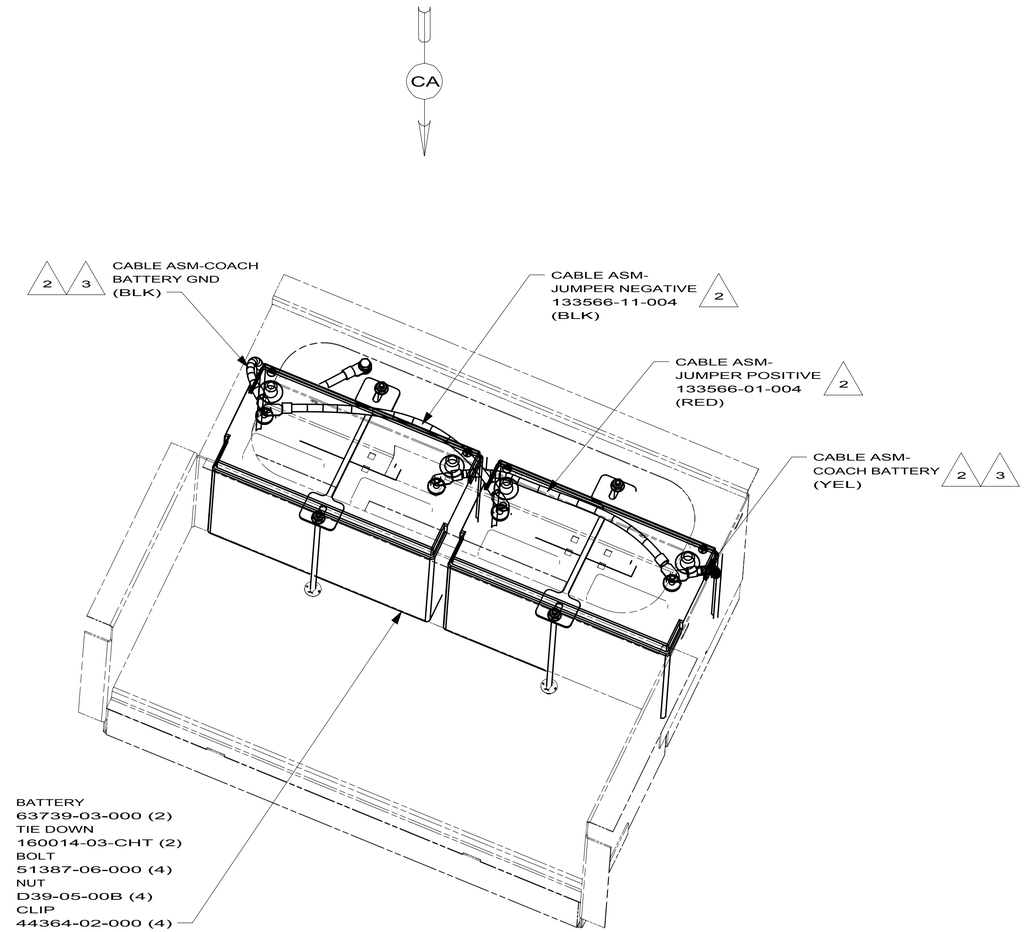

BATTERY BOX

22W BATTERY-SECOND

265 CODES/STANDARDS-CSA/CMVSS

1B1 CODES/STANDARDS USA

1B1 265 22W

3 THE POSITIVE AND NEGATIVE BATTERY CABLES ARE TO BE TERMINATED ON OPPOSITE BATTERIES.

2 BATTERY CABLES ARE NOT TO BE ROUTED OVER BATTERY FILL CAPS.

1. SEE WIRING INSTL-CHASSIS FOR ADDITIONAL INFORMATION.

NOTES:

FOR ELECTRICAL TORQUE SPECIFICATIONS SEE DWG NO. 128783-01-000

X-X FOR ELECTRICAL CALLOUTS SEE DWG NO. 121339-01-000

FIRST USED
10 200/300/700 SER

DO NOT SCALE DRAWING

TITLE:
BATTERY INSTL

SHEET 3 | PART NO 170020 | REV

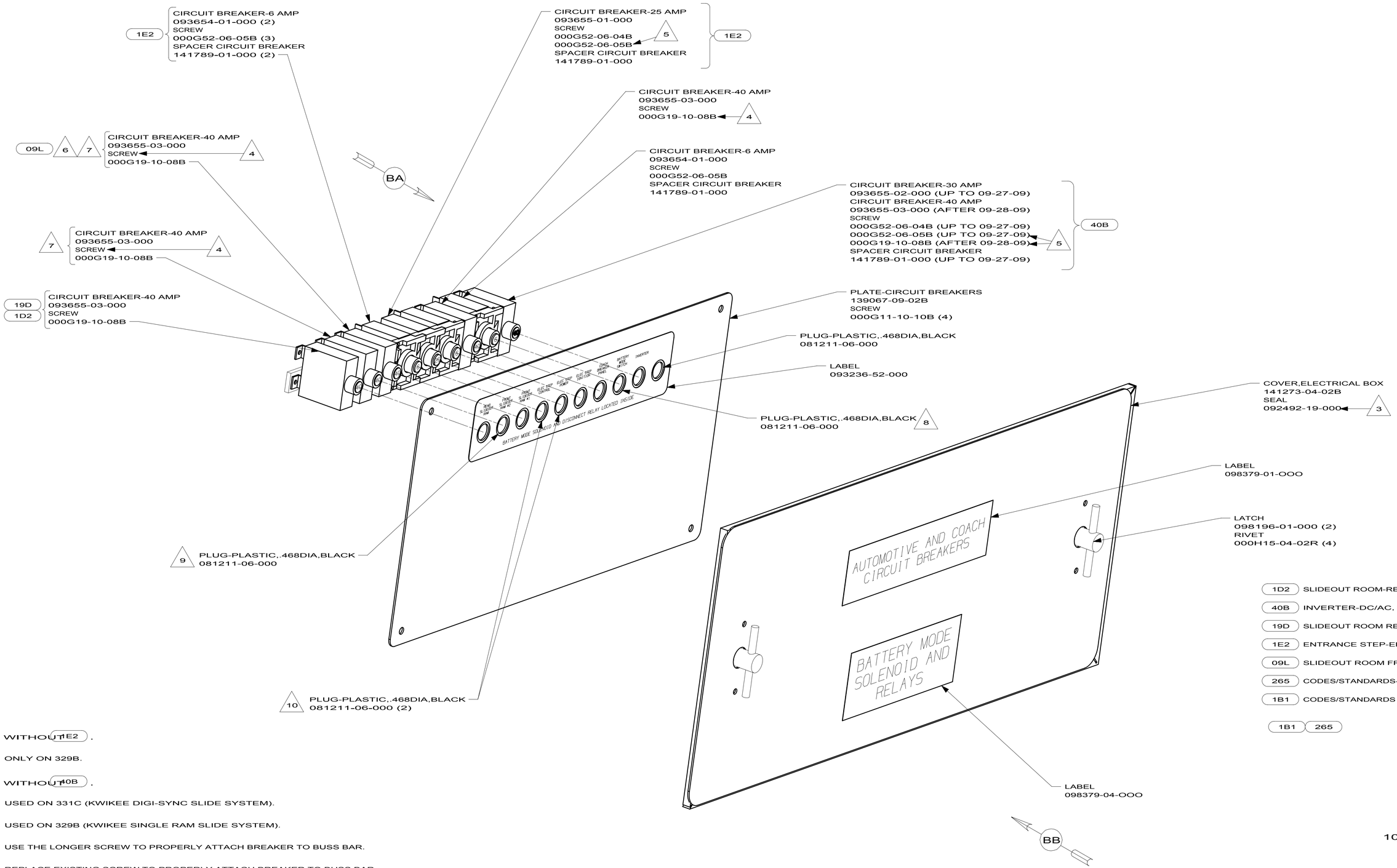

1D2	SLIDEOUT ROOM-REAR RIGHTHAND
40B	INVERTER-DC/AC, 300 WATT
19D	SLIDEOUT ROOM REAR LEFTHAND
1E2	ENTRANCE STEP-ELEC.
09L	SLIDEOUT ROOM FRONT LEFT
265	CODES/STANDARDS-CSA/CMVSS
1B1	CODES/STANDARDS USA

1B1 265

10-300 SERIES

NOTES:

1. SPACER NOT REQUIRED ON 40 AMP BREAKER.
2. SECURE CONDUIT 041953, TAB AS REQUIRED, OVER ALL WIRES IN CONTACT WITH SHARP EDGES.

3 PLACE AROUND ENTIRE PERIMETER OF DOOR WITH SEAM AT THE BOTTOM.

4 REPLACE EXISTING SCREW TO PROPERLY ATTACH BREAKER TO BUSS BAR.

5 USE THE LONGER SCREW TO PROPERLY ATTACH BREAKER TO BUSS BAR.

6 USED ON 329B (KWIKEE SINGLE RAM SLIDE SYSTEM).

7 USED ON 331C (KWIKEE DIGI-SYNC SLIDE SYSTEM).

8 WITHOUT 40B .

9 ONLY ON 329B.

10 WITHOUT 1E2 .

FOR ELECTRICAL TORQUE SPECIFICATIONS SEE DWG NO. 128783-01-000

X-X FOR ELECTRICAL CALLOUTS SEE DWG NO. 121339-01-000

CHASSIS ELECTRICAL BOX ASM

1 2 170119

2/11/2010

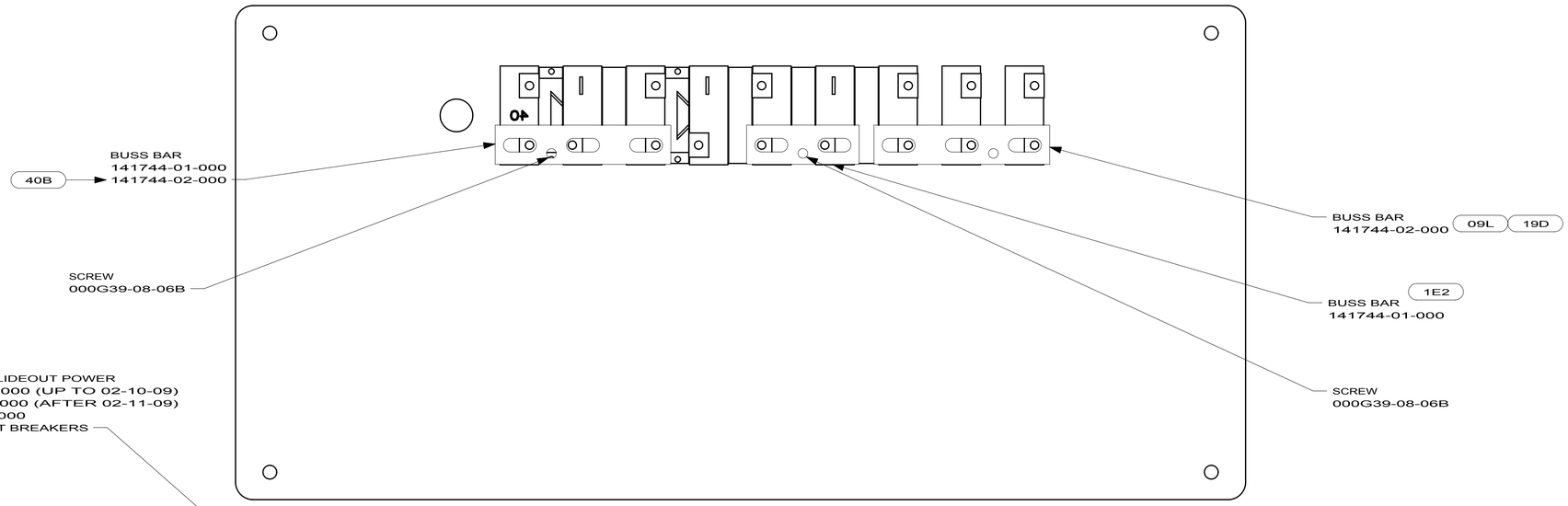

VIEW BA

12 WIRE ASM-SLIDEOUT POWER
149552-12-000 (UP TO 02-10-09)
149552-31-000 (AFTER 02-11-09)
14 149552-30-000
TO SLIDEOUT BREAKERS

5 CABLE ASM-6 GA
140228-01-003
TO SLIDEOUT
BREAKERS

WIRE ASM-
ELECTRICAL BOX
162700-01-000
(TO CIRCUIT
BREAKERS)
5

BOX ASM-ELECTRICAL
155605-01-02B
SCREW
000G39-10-12T (8)

8 GROMMET
023942-01-000 (2)
PLUG
061420-15-000
SEAL

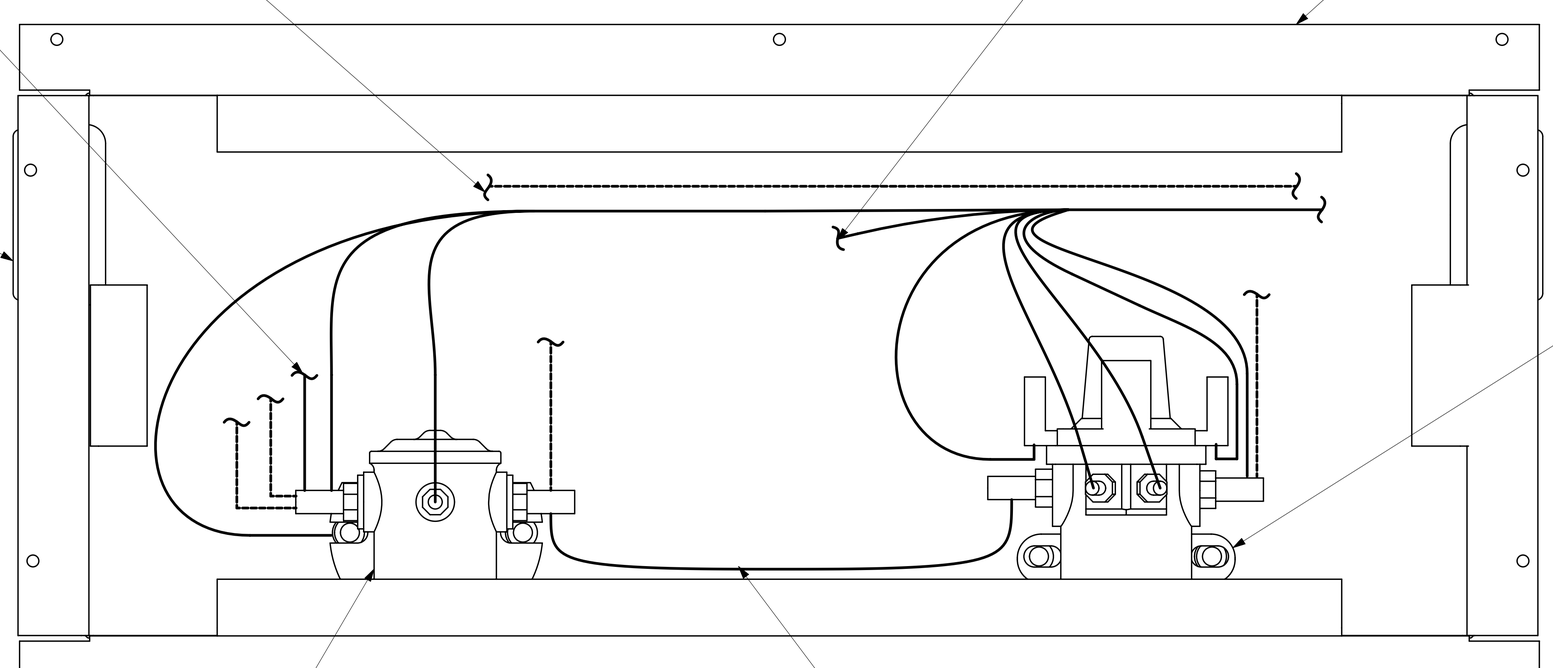

RELAY-BATTERY DISCONNECT
086273-01-000
SCREW
000G50-04-12B (2)
FUSE-5 AMP
062901-02-000

14 USED ON 331C ONLY.

12 USED ON 329B ONLY.

8 LOCATION OF GROMMET & PLUG DEPENDENT ON LOCATION OF BOX.

5 SEE WIRING INSTL-CHASSIS FOR ADDITIONAL INFORMATION.

SOLENOID
008188-01-000
SCREW
000G50-04-12B (2)

CABLE ASM (RED)
141415-31-002

VIEW BB

60M HYDRAULIC LEVEL JACKS-AUTO
40B INVERTER-DC/AC, 300 WATT
19D SLIDEOUT ROOM REAR LEFTHAND
1E2 ENTRANCE STEP-ELEC.
09L SLIDEOUT ROOM FRONT LEFT
265 CODES/STANDARDS-CSA/CMVSS
1B1 CODES/STANDARDS USA

1B1 265

10-300 SERIES

FOR ELECTRICAL TORQUE SPECIFICATIONS SEE DWG NO. 128783-01-000	X-X FOR ELECTRICAL CALLOUTS SEE DWG NO. 121339-01-000

CHASSIS ELECTRICAL BOX ASM

2 170119

NOTES:

1. LEGEND: WINNEBAGO: CABLE: CHASSIS SUPPLIED WIRING.

2/11/2010

RELEASE	REV A	DATE	DWG NO 167529

REV	ZONE	REVISION RECORD	DATE	DFTR-ORIG

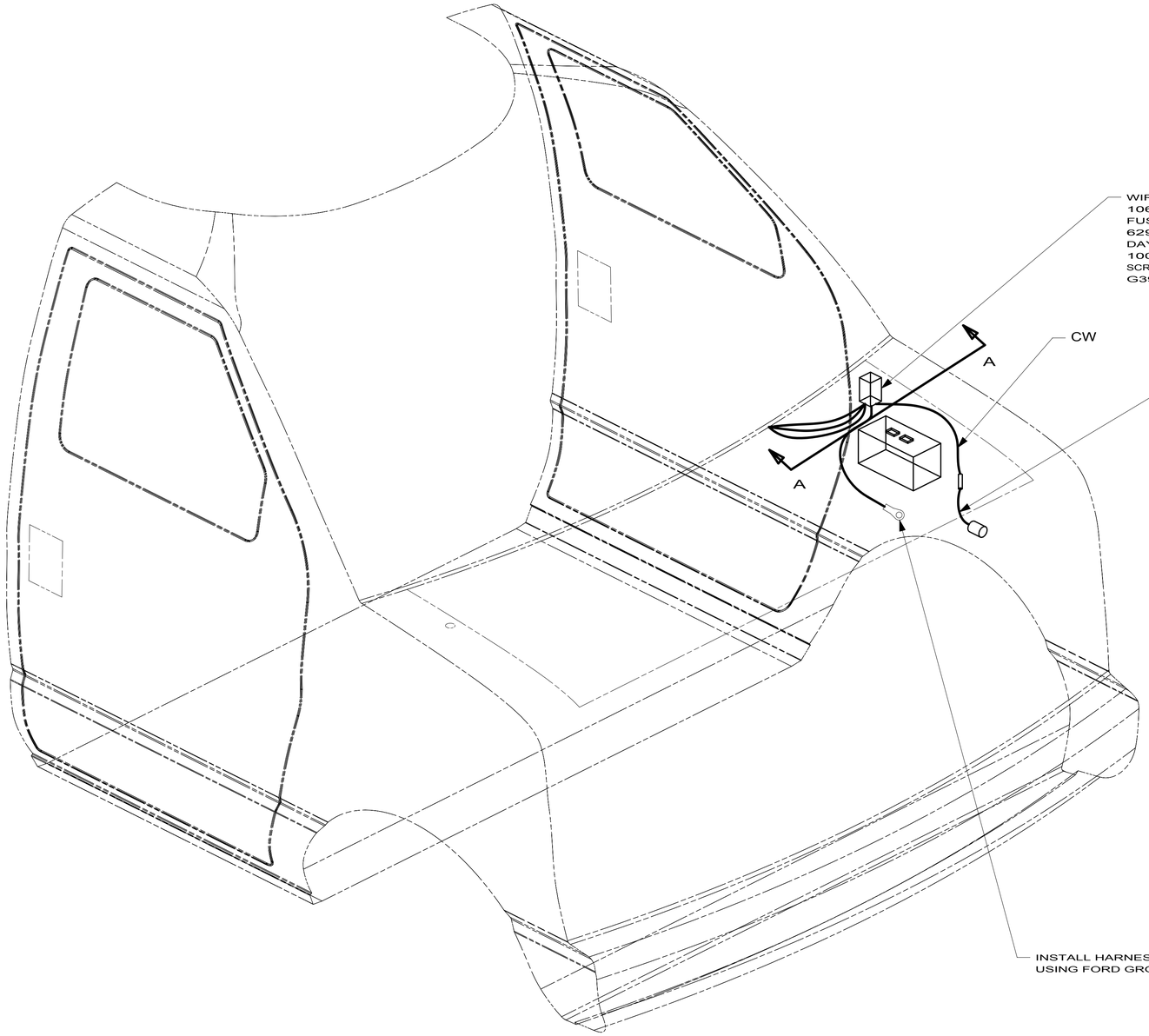

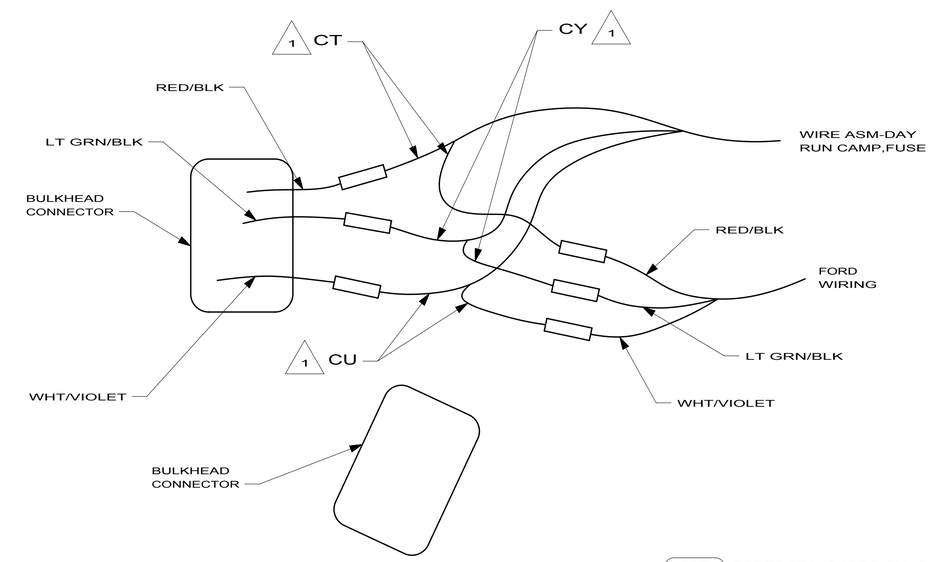

VIEW A-A

27E CODES/STANDARDS-CMVSS

27E

COPYRIGHT 2009
WINNEBAGO
INDUSTRIES, INC.

DFTR	ORIG. DATE
CHKR	ALL DIMENSIONS ARE IN MILLIMETERS
P.E.	
M.E.	FIRST USED
DSNR	09 C-BODIES

UNSPECIFIED TOLERANCES ARE:
WHOLE DIM (X) :
ONE-PLACE (X.X) :
TWO-PLACE (X.XX) :
ANGLE :

THIRD ANGLE PROJECTION

MATERIAL:

DO NOT SCALE DRAWING

TITLE:
WIRING INSTL-DAY RUN LAMPS

SHEET 1 OF 1 | PART NO 167529 | REV

REF: 1

1 CUT AND RECONNECT AS SHOWN.

NOTES:

C-BODY
FORD CHASSIS

RELEASE	REV A	DATE	DWG NO 121339

REV	ZONE	REVISION RECORD	DATE	DFTR-ORIG

TERMINALS

NO.	PART NUMBER	DESCRIPTION
B-1	50003-01	TERMINAL-PIN, 16-14 GA,.156 DIA
B-2	50004-01	TERMINAL-RECP, 16-14 GA,.156 DIA
B-11	50003-02	TERMINAL-PIN, 16-14 GA,.180 DIA
B-12	50004-02	TERMINAL-RECP, 16-14 GA,.180 DIA
WP-1	106950-01	TERMINAL-PIN, 16-14 GA
WP-2	106950-02	TERMINAL-PIN, 10-12 GA
WP-3	106950-03	TERMINAL-PIN, 8 GA
R-1	35416-01	TERMINAL-RING, #10 STD, 8 GA
R-2	35416-02	TERMINAL-RING, #10 STD, 6 GA
R-3	35416-03	TERMINAL-RING, #10 STD, 10-12 GA
R-4	35416-04	TERMINAL-RING, #10 STD, 14-16 GA
R-5	37018-01	TERMINAL-RING, 5/16 STD, 12-10 GA
R-6	102777-01	TERMINAL-RING, #6 STD, 14-16 GA
R-7	102777-02	TERMINAL-RING, #6 STD, 10-12 GA
R-8	102777-03	TERMINAL-RING, #6 STD, 8 GA
R-9	33787-01	TERMINAL-RING, #10 STD, 14 GA
R-60	8325-01	TERMINAL-RING, 1/4 STD, 14-16 GA
R-61	8326-01	TERMINAL-RING, 3/8 STD, 14-16 GA
R-62	8327-01	TERMINAL-RING, #10 STD, 14-16 GA
R-63	8328-01	TERMINAL-RING, #10 STD, 10-12 GA
R-64	8328-02	TERMINAL-RING, 3/8 STD, 10-12 GA
R-65	8329-01	TERMINAL-RING, 3/8 STD, 8 GA
R-66	8331-01	TERMINAL-RING, 3/8 STD, 4 GA
R-67	8332-01	TERMINAL-RING, 1/4 STD, 6 GA
R-68	8332-02	TERMINAL-RING, 1/4 STD, 10 GA
R-69	8350-01	TERMINAL-RING, 3/8 STD, 6 GA
R-70	99275-02	TERMINAL-RING, 7/16 STD, 8 GA
R-71	101397-01	TERMINAL-RING, #10 STD, 14-16 GA
R-91	88791-01	TERMINAL-RING, 3/8, 90°, 1/0 GA
R-92	88791-02	TERMINAL-RING, 3/8, 90°, 2 GA
R-93	8348-01	TERMINAL-RING, 3/8 STD, 2 GA
R-94	99275-01	TERMINAL-RING, 7/16 STD, 1/0 GA
RF-51	7944-01	TERMINAL-SPADE, 12-10 GA, #8 STUD
RF-52	7945-01	TERMINAL-SPADE, 18-14 GA, #8 STUD
TR-1	47443-01	TERMINAL-RECP, 16-14 GA,.25, INS
TR-2	47443-02	TERMINAL-RECP, 12-10 GA,.25, INS
TR-3	47443-05	TERMINAL-RECP, 22-18 GA,.25, INS
TR-11	47443-03	TERMINAL-RECP, 16-14 GA,.19, INS
TR-12	47443-04	TERMINAL-RECP, 16-14 GA,.11, INS
TR-21	80015-01	TERMINAL-RECP, 22-18 GA,.250, 90 DEG FOR USE WITH TAB THICKNESS .032
TR-22	80015-02	TERMINAL-RECP, 16-14 GA,.187, 90 DEG FOR USE WITH TAB THICKNESS .032
TR-23	80015-03	TERMINAL-RECP, 16-14 GA,.250, 90 DEG FOR USE WITH TAB THICKNESS .032
TR-24	80015-04	TERMINAL-RECP, 16-14 GA,.187, 90 DEG FOR USE WITH TAB THICKNESS .020
TR-51	7940-01	TERMINAL-RECP, 16-12 GA,.25, UNINS
TR-52	23809-01	TERMINAL-RECP, 16-14 GA,.19, UNINS
TR-53	23809-02	TERMINAL-RECP, 18-20 GA,.25, UNINS
TR-54	49270-01	TERMINAL-RECP, 18-20 GA,.19, UNINS
TR-55	7940-02	TERMINAL-RECP, 10 GA, .25, UNINS
TT-1	85745-02	TERMINAL-TAB, 16-14 GA,.25, INS
TT-2	85745-03	TERMINAL-TAB, 10-12 GA,.25, INS
TT-11	85745-04	TERMINAL-TAB, 18-22 GA,.19, INS
TT-51	7942-01	TERMINAL-TAB, 16-14 GA,.25, UNINS
TT-52	7943-01	TERMINAL-TAB, 14-10 GA,.25, UNINS
MF6-1	129236-01	TERMINAL-FEM, M/P, 630, 10-12
MF6-2	129236-02	TERMINAL-FEM, M/P, 630, 14-16

SPLICES

NO.	PART NUMBER	DESCRIPTION
BS-1	31876-01	SPLICE-BUTT, 16-14 GA, BLUE
BS-2	31876-02	SPLICE-BUTT, 12-10 GA, YELLOW
BS-3	31876-03	SPLICE-BUTT, 22-18 GA, RED
BS-SB	100070-01	SPLICE-BUTT, 14-16 GA, SHRINK,BLUE
BS-RB	112823-01	SPLICE-BUTT, 14-22 GA, REDUCER
BS-RS	173854-01	SPLICE-BUTT, 14-22 GA, REDUCER, SHRINK
S-1	7946-01	SPLICE, 1-6 MM²
S-2	23808-01	SPLICE, 6-9 MM²
I-2	7956-02	SHRINK WRAP .375 DIA
I-5	7956-05	SHRINK WRAP .25 DIA
SH-1	58028-01	SPLICE-HAT
S-10	101173-01	SPLICE-BARREL, 26300 CMA

NO.	PART NUMBER	DESCRIPTION
SP-1	90986-02	PLUG ASM-ELECTRIC STEP
SP-2	142524-01-000	HOUSING-4 PIN
	098261-01-000	SOCKET-CONNECTOR
	098262-07-000	SEAL-CONNECTOR
	098261-02-000 (3)	SOCKET-CONNECTOR
	098262-01-000 (3)	SEAL-CONNECTOR
HR-1	63910-01	HOUSING-RELAY
MP-8	125323-02	HOUSING-PIN, 8 CAVITY
MP-10	125323-01	HOUSING-PIN, 10 CAVITY
MPP	125324-01	TERMINAL-MALE, M/P, 150
CAV-1	125325-01	SEAL-CAVITY, 150-SERIES M/P
CON-3	98262-03	SEAL-CONNECTOR
LS-8	125323-03	LOCK-SECONDARY 8 POSITION
LS-10	125323-04	LOCK-SECONDARY 10 POSITION
H-8	108355-01	HOUSING-SWITCH, 8 POSITION
H-12	108355-02	HOUSING-SWITCH, 12 POSITION

NO.	PART NUMBER	DESCRIPTION
GEN-1	125323-02-000	HOUSING-8 POSN, MALE ,150 SERIES
	125324-01-000 (4)	TERMINAL-MALE, M/P, 150
	098262-03-000 (4)	SEAL-CONNECTOR
	125325-01-000 (4)	SEAL-CAVITY, 150 SERIES M/P
	125323-03-000	LOCK-SECONDARY 8 POSITION
GEN-2	125323-01-000	HOUSING-10 POSN, MALE ,150 SERIES
	125324-01-000 (5)	TERMINAL-MALE, M/P, 150
	098262-03-000 (5)	SEAL-CONNECTOR
	125325-01-000 (5)	SEAL-CAVITY, 150 SERIES M/P
	125323-04-000	LOCK-SECONDARY 10 POSITION

HOUSINGS AND TERMINALS

NO.	PART NUMBER	DESCRIPTION
HS-2	88474-10	HOUSING-SOCKET, 2 CAVITY
HS-3	88474-09	HOUSING-SOCKET, 3 CAVITY
HS-4	88474-08	HOUSING-S0CKET, 4 CAVITY
HS-5	88474-07	HOUSING-SOCKET, 5 CAVITY
HS-6	88474-06	HOUSING-SOCKET, 6 CAVITY
HS-7	88474-05	HOUSING-SOCKET, 6 CAVITY-IN LINE
HS-9	88474-03	HOUSING-SOCKET, 9 CAVITY
HS-12	88474-01	HOUSING-SOCKET, 12 CAVITY
HS-15	88474-02	HOUSING-SOCKET, 15 CAVITY
HS-2-R	88474-12	HOUSING-SOCKET, 2 CAVITY-RED
HP-2	88473-10	HOUSING-PIN, 2 CAVITY
HP-3	88473-09	HOUSING-PIN, 3 CAVITY
HP-4	88473-08	HOUSING-PIN, 4 CAVITY
HP-5	88473-07	HOUSING-PIN, 5 CAVITY
HP-6	88473-06	HOUSING-PIN, 6 CAVITY
HP-7	88473-05	HOUSING-PIN, 6 CAVITY-IN LINE
HP-8	88473-04	HOUSING-PIN, 8 CAVITY-IN LINE
HP-9	88473-03	HOUSING-PIN, 9 CAVITY
HP-12	88473-01	HOUSING-PIN, 12 CAVITY
HP-15	88473-02	HOUSING-PIN, 15 CAVITY
HP-2-R	88473-15	HOUSING-PIN, 2 CAVITY-RED
HP-3-B	88473-12	HOUSING-PIN, 3 CAVITY-BLUE
HP-3-G	88473-13	HOUSING-PIN, 3 CAVITY-GREEN
HP-3-R	88473-14	HOUSING-PIN, 3 CAVITY-RED
TS-1	88476-01	SOCKET-CONNECTOR, 20-14 GA
TS-2	88476-02	SOCKET-CONNECTOR, 12-10 GA
TP-1	88475-01	PIN-CONNECTOR, 20-14 GA
TP-2	88475-02	PIN-CONNECTOR, 12-10 GA
HS2HA	137208-01	HOUSING-SOCKET, 2 CAVITY-HIGH AMP
HP2HA	137207-01	HOUSING-PIN, 2 CAVITY-HIGH AMP
TS-HA	137210-01	SOCKET-CONNECTOR, 10AWG HIGH AMP
TP-HA	137209-01	PIN-CONNECTOR, 10AWG HIGH AMP
H-HA	104100-01	HOUSING, 1 CAVITY 75 AMP
T-HA	104100-03	TERMINAL 10 AWG - 6 AWG 75 AMP

BALLOON CALLOUT LEGEND

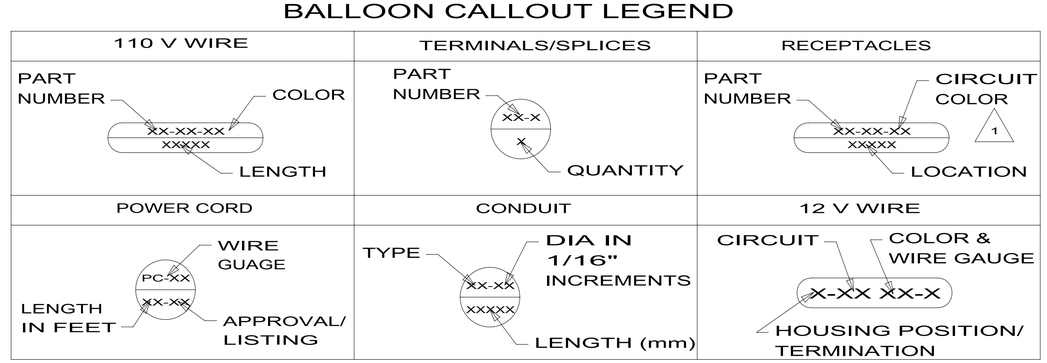

1 FOR RECP-BLANK, DET-X DENOTES DETAIL VIEW.

2 CONTACT WIRE PREP PRIOR TO USING FOR TOOLING PURPOSES.

NOTES:

COPYRIGHT 2010 WINNEBAGO INDUSTRIES, INC.

WINNEBAGO INDUSTRIES

DFTR	ORIG. DATE
CHKR	ALL DIMENSIONS ARE IN MILLIMETERS
P.E.	
M.E.	FIRST USED
DSNR	96 MH'S

UNSPECIFIED TOLERANCES ARE:
WHOLE DIM (X) :
ONE-PLACE (X.X) :
TWO-PLACE (X.XX) :
ANGLE :

MATERIAL:

THIRD ANGLE PROJECTION

DO NOT SCALE DRAWING

TITLE: PART LISTING-ELECTRICAL

SHEET 1 OF 7 | PART NO 121339 | REV

REF: 1

2/17/2010

DWG NO 121339

WIRE-SINGLE INS CONDUCTOR, STRANDED

NO.	PART NUMBER	DESCRIPTION
18-W 18-Y	156658-01 156658-02	WIRE, 18 GA. WHITE, PVC WIRE, 18 GA. YELLOW, PVC
16-Y 16-W	89360-01 89360-02	WIRE, 16 GA. YELLOW, PVC WIRE, 16 GA. WHITE, PVC
14-Y 14-W	48554-02 48554-04	WIRE, 14 GA. YELLOW, PVC WIRE, 14 GA. WHITE, PVC
12-Y 12-W	48555-02 48555-04	WIRE, 12 GA. YELLOW, PVC WIRE, 12 GA. WHITE, PVC
10-Y 10-W	8000-03 8000-05	WIRE, 10 GA. YELLOW, PVC WIRE, 10 GA. WHITE, PVC
8-B 8-G	8005-01 8005-03	WIRE, 8 GA. BLACK, PVC WIRE, 8 GA. GREEN, PVC
6-B 6-G	70065-01 70065-03	WIRE, 6 GA. BLACK, PVC WIRE, 6 GA. GREEN, PVC
18-WX 18-YX	121015-01 121015-02	WIRE, 18 GA. WHITE, XLPE WIRE, 18 GA. YELLOW, XLPE
16-YX 16-WX	116675-01 116675-02	WIRE, 16 GA. YELLOW, XLPE WIRE, 16 GA. WHITE, XLPE
14-YX 14-WX	98586-01 98586-02	WIRE, 14 GA. YELLOW, XLPE WIRE, 14 GA. WHITE, XLPE
12-YX 12-WX	98609-01 98609-02	WIRE, 12 GA. YELLOW, XLPE WIRE, 12 GA. WHITE, XLPE
10-YX 10-WX	116676-03 116676-04	WIRE, 10 GA. YELLOW, XLPE WIRE, 10 GA. WHITE, XLPE
8-BX 8-GX	116674-01 116674-02	WIRE, 8 GA. BLACK, XLPE WIRE, 8 GA. GREEN, XLPE
6-BX 6-GX	116687-01 116687-02	WIRE, 6 GA. BLACK, XLPE WIRE, 6 GA. GREEN, XLPE

WIRE-NM SHEATHED CABLE

NO.	PART NUMBER	DESCRIPTION
14 UL	8027-01-000	WIRE 14-2 ROMEX W/GROUND (UL)
14 CA	8023-02-000	WIRE 14-2 ROMEX W/GROUND (CAN)
12 UL	8026-01-000	WIRE 12-2 ROMEX W/GROUND (UL)
12 CA	8023-01-000	WIRE 12-2 ROMEX W/GROUND (CAN)
12-3 UL	8026-03-000	WIRE 12-3 ROMEX W/GROUND (UL)
12-3 CA	8023-03-000	WIRE 12-3 ROMEX W/GROUND (CAN)
10 UL	8022-01-000	WIRE 10-2 ROMEX W/GROUND (UL)
10 CA	24743-01-000	WIRE 10-2 ROMEX W/GROUND (CAN)
6-3 UL	108914-01-000	WIRE 6-3 ROMEX W/GROUND (UL)
6-3 CA	113136-01-000	WIRE 6-3 ROMEX W/GROUND (CAN)
6-2 UL	108914-02-000	WIRE 6-2 ROMEX W/GROUND (UL)
4-3 UL	128375-01-000	WIRE 4-3 ROMEX W/GROUND (UL)
4-3 CA	128375-01-000	WIRE 4-3 ROMEX W/GROUND (CAN)

CONDUIT

NO.	PART NUMBER	DESCRIPTION	TEMP.
C-4	41953-07-000	CONDUIT-CONVOLUTE,SLIT .25"ID	194° F
C-6	41953-06-000	CONDUIT-CONVOLUTE,SLIT .38"ID	194° F
C-8	41953-01-000	CONDUIT-CONVOLUTE,SLIT .50"ID	194° F
C-10	41953-02-000	CONDUIT-CONVOLUTE,SLIT .63"ID	194° F
C-16	41953-03-000	CONDUIT-CONVOLUTE,SLIT 1.0"ID	194° F
C-24	41953-08-000	CONDUIT-CONVOLUTE,SLIT 1.5"ID	194° F
C-32	41953-15-000	CONDUIT-CONVOLUTE,SLIT 2.0"ID	194° F
CX-8	41953-09-000	CONDUIT-CONVOLUTE,SLIT .50"ID	239° F
CX-12	41953-10-000	CONDUIT-CONVOLUTE,SLIT .75"ID	239° F
CX-16	41953-11-000	CONDUIT-CONVOLUTE,SLIT 1.0"ID	239° F
CX-20	41953-13-000	CONDUIT-CONVOLUTE,SLIT 1.25"ID	239° F
CX-24	41953-14-000	CONDUIT-CONVOLUTE,SLIT 1.50"ID	239° F
CX-32	41953-16-000	CONDUIT-CONVOLUTE,SLIT 2.0"ID	239° F
CN-10	41953-05-000	CONDUIT-CONVOLUTE,NOT SLIT .63"ID	194° F
CN-16	41953-12-000	CONDUIT-CONVOLUTE,NOT SLIT 1.0"ID	194° F

POWER CORDS

NO.	PART NUMBER	DESCRIPTION
PC-10/28	8054-01-000	POWER CORD 10 GA, 30 AMP, 28 FT. (UL/CA)
PC-10/35	8054-02-000	POWER CORD 10 GA, 30 AMP, 35 FT. (UL/CA)
PC-10/30-CA	8052-01-000	SUPERCEEDED BY 8054-01-000
PC-6/36	108934-01-000	POWER CORD 6 GA, 50 AMP, 36 FT. (UL/CA)
PC-6/36-FX	108934-02-000	POWER CORD 6 GA, 50 AMP, 36 FT. (UL/CSA) SUPERFLEX
PC-6/36-CA	113096-01-000	SUPERCEEDED BY 108934-02-000

BATTERY CABLE LEGEND

COLOR	DESCRIPTION
PURPLE	CHASSIS BATTERY TO SOLENOID
BLUE	HYDRAULIC JACKS PUMP
RED	BATTERY TO STARTER
GREEN	BATTERY TO GENERATOR
YELLOW	COACH BATTERY TO SOLENOID

RECEPTACLES(UP TO 01-24-10)

NO.	PART NUMBER	DESCRIPTION
RCP-1	172839-02-CHT	RECEPTACLE-SINGLE, FLUSH MOUNT
RCP-2	172839-01-CHT	RECEPTACLE-DOUBLE, FLUSH MOUNT
RCP-3	58707-01-000	RECEPTACLE-SINGLE, SURFACE MOUNT
RCP-4	157360-01-000	RECEPTACLE-SINGLE,SURFACE MOUNT,20A
RCP-5	160984-01-CHT	RECEPTACLE-SINGLE,FLUSH MOUNT,20A
RCP-B	58707-02-000	RECEPTACLE-BLANK, JUNCTION
RCP-E	131826-01-CHT	INCLUDES COVER & GASKET

RECEPTACLES(AFTER 01-25-10)

NO.	PART NUMBER	DESCRIPTION
RCP-1	176149-02-CHT/176159-01-CHT	RECEPTACLE-SINGLE/PLATE,FLUSH MOUNT
RCP-2	176149-01-CHT/176159-01-CHT	RECEPTACLE-DOUBLE/PLATE,FLUSH MOUNT
RCP-3	176153-01-CHT	RECEPTACLE-SINGLE, SURFACE MOUNT
RCP-4	157360-01-000	RECEPTACLE-SINGLE,SURFACE MOUNT,20A
RCP-5	176144-01-CHT/176159-01-CHT	RECEPTACLE-SINGLE/PLATE,FLUSH MT,20A
RCP-B	176158-01-CHT	RECEPTACLE-BLANK, JUNCTION
RCP-E	131826-01-CHT	INCLUDES COVER & GASKET
SW-1	176157-01-CHT/176159-01-CHT	SWITH-15A,SINGLE POLE/PLATE

CIRCUIT COLOR LEGEND

110V CIRCUIT	WIRE COLOR	COAXIAL CIRCUIT
A/C CIRCUIT 1	RED	CABLE INPUT W/O SPLITTER
A/C CIRCUIT 2	GRN	REAR TV W/O SPLITTER
GENERAL RECPS 1	BLU	ANTENNA
GENERAL RECPS 2	BRN	FRONT TV
GENERAL RECPS 3	PUR	VCR INPUT
GENERAL RECPS 4	GRY	
REFRIGERATOR/ CONVERTER	YEL	EXT ENT CTR
MICROWAVE	BLK	AUX INPUT
WATER HEATER	WHT	
WASHER/DRYER	GLD	
DISHWASHER	SIL	
	ORG	SATELLITE PLATE INPUT
	ORG/ORG	SATELLITE PLATE OUTPUT
	RED/RED	CABLE INPUT W/SPLITTER
	GRN/GRN	REAR TV W/SPLITTER
	PUR/PUR	VCR OUTPUT

FIRST USED: 96 MH'S

DO NOT SCALE DRAWING

TITLE: PART LISTING-ELECTRICAL

SHEET 2 | PART NO 121339 | REV

2/17/2010

DWG NO 121339

LAMP ASM-PACKAGE,PANCAKE

NO	PART NUMBER	DESCRIPTION
LF1-1	LAMP 98024-01-CHT SCREW G11-08-16U (4) CONNECTOR 58028-01-000 (2)	LAMP ASM, FROSTED LENS, 1 BULB W/SWITCH PROGRESSIVE DYNAMICS INC.
LF2-1	LAMP 98024-03-CHT SCREW G11-08-16U (6) CONNECTOR 58028-01-000 (2)	LAMP ASM, FROSTED LENS, 2 BULB W/SWITCH PROGRESSIVE DYNAMICS INC.
LO1-1	LAMP 98024-05-CHT SCREW G11-08-16U (4) CONNECTOR 58028-01-000 (2)	LAMP ASM, OPTI CLEAR LENS, 1 BULB W/SWITCH PROGRESSIVE DYNAMICS INC.
LO2-1	LAMP 98024-06-CHT SCREW G11-08-16U (6) CONNECTOR 58028-01-000 (2)	LAMP ASM, OPTI CLEAR LENS, 2 BULB W/SWITCH PROGRESSIVE DYNAMICS INC.
LF1N1	LAMP 98024-07-CHT SCREW G11-08-16U (4) CONNECTOR 58028-01-000 (2)	LAMP ASM, FROSTED LENS, 1 BULB W/O SWITCH PROGRESSIVE DYNAMICS INC.
LF2N1	LAMP 98024-08-CHT SCREW G11-08-16U (6) CONNECTOR 58028-01-000 (2)	LAMP ASM, FROSTED LENS, 2 BULB W/O SWITCH PROGRESSIVE DYNAMICS INC.
LFSN1	LAMP 98024-09-CHT SCREW G11-08-16U (6) CONNECTOR 58028-01-000 (2)	LAMP ASM, SINGLE FROSTED LENS, 2 BULB W/O SWITCH PROGRESSIVE DYNAMICS INC.

LAMP ASM-PACKAGE,PORCH

NO	PART NUMBER	DESCRIPTION
LEXT-1	LAMP 97917-01-CHT SCREW G67-10-129 (4) CONNECTOR 58028-01-000 (2)	LAMP ASM-PORCH, SURFACE MOUNT BARGMAN
LEXT-2UL	LAMP 8089-01-000 SCREW G68-06-10E (2) CONNECTOR 58028-01-000 (2)	LAMP ASM-PORCH, RECESSED UL LIST JRV PROD
LEXT-2CA	LAMP 8089-02-000 SCREW G68-06-10E (2) CONNECTOR 58028-01-000 (2)	LAMP ASM-PORCH, RECESSED CAN LIST JRV PROD
LEXT-3	LAMP 171513-01-CHT SCREW G67-10-129 (2) CONNECTOR 58028-01-000 (2)	LAMP ASM-PORCH SURFACE MOUNT OPTRONICS

LAMP ASM-PACKAGE,PANCAKE

NO	PART NUMBER	DESCRIPTION
LF1-2	LAMP 137417-01-CHT SCREW G11-08-16U (4) CONNECTOR 58028-01-000 (2)	LAMP ASM, FROSTED LENS, 1 BULB W/SWITCH PROGRESSIVE DYNAMICS INC.
LF2-2	LAMP 137417-04-CHT SCREW G11-08-16U (6) CONNECTOR 58028-01-000 (2)	LAMP ASM, FROSTED LENS, 2 BULB W/SWITCH PROGRESSIVE DYNAMICS INC.
LO1-2	LAMP 137417-02-CHT SCREW G11-08-16U (4) CONNECTOR 58028-01-000 (2)	LAMP ASM, OPTI CLEAR LENS, 1 BULB W/SWITCH PROGRESSIVE DYNAMICS INC.
LO2-2	LAMP 137417-05-CHT SCREW G11-08-16U (6) CONNECTOR 58028-01-000 (2)	LAMP ASM, OPTI CLEAR LENS, 2 BULB W/SWITCH PROGRESSIVE DYNAMICS INC.
LF1N2	LAMP 137417-03-CHT SCREW G11-08-16U (4) CONNECTOR 58028-01-000 (2)	LAMP ASM, FROSTED LENS, 1 BULB W/O SWITCH PROGRESSIVE DYNAMICS INC.
LFSN2	LAMP 137417-06-CHT SCREW G11-08-16U (6) CONNECTOR 58028-01-000 (2)	LAMP ASM, SINGLE FROSTED LENS, 2 BULB W/O SWITCH PROGRESSIVE DYNAMICS INC.

LAMP ASM-PACKAGE,HALOGEN

NO	PART NUMBER	DESCRIPTION
HAL	LAMP 123775-01-CHT SCREW (SUPPLIED) CONNECTOR 58028-01-000 (2)	LAMP ASM-HALOGEN, READING 1 BULB
HAL-S	LAMP 123775-01-CHT SPACER 123775-02-CHT SCREW G13-06-16U (3) CONNECTOR 58028-01-000 (2)	LAMP ASM-HALOGEN, READING WITH 3/4" SPACER 1 BULB
HAL-2	LIGHT-HAL,ROUND 165170-01-CHT SCREW G13-06-12B (2) CONNECTOR 58028-01-000 (2)	LIGHT-HALOGEN, ROUND 3"
HAL-4	LIGHT-HAL,ROUND 165643-01-CHT SCREW G13-05-16B (3) CONNECTOR 58028-01-000 (2) (SEE DETAIL CA)	LIGHT-HALOGEN, ROUND 4.5"

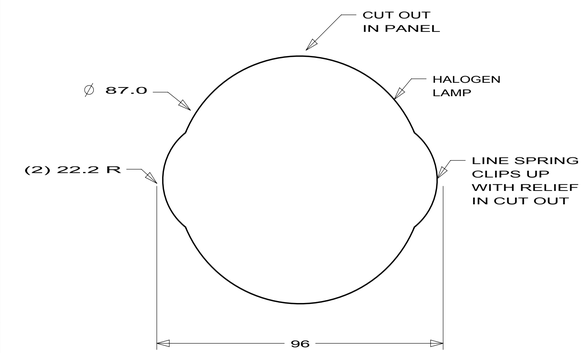

DETAIL CA

LEGEND

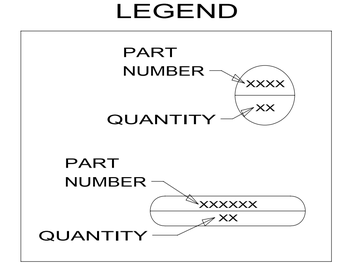

FIRST USED

96 MH'S

DO NOT SCALE DRAWING

TITLE:

PART LISTING-ELECTRICAL

SHEET 3 | PART NO 121339 | REV

2/17/2010

DWG NO 121339

LAMP ASM-PACKAGE,FLUORESCENT

NO	PART NUMBER	DESCRIPTION
FLU-1	LAMP 91936-02-CHT SCREW G11-08-12U (4) CONNECTOR 58028-01-000 (2)	LAMP ASM-FLUORESCENT 12" 2 BULB W/SWITCH THIN-LITE
FLU-2	LAMP 91936-01-CHT SCREW G11-08-12U (4) CONNECTOR 58028-01-000 (2)	LAMP ASM-FLUORESCENT 18" 2 BULB W/SWITCH THIN-LITE
FLU-3	LAMP 127327-01-CHT SCREW G11-08-12U (2) CONNECTOR 58028-01-000 (2)	LAMP ASM-FLUORESCENT 18" 1-12" BULB W/SWITCH THIN-LITE
FLU-4	LAMP 130338-01-CHT SCREW G11-08-12U (4) CONNECTOR 58028-01-000 (2)	LAMP ASM-FLUORESCENT 18" 2 BULB SURFACE MOUNT W/SWITCH THIN-LITE
FLU-5	LAMP 153464-02-CHT SCREW G11-08-12U (4) CONNECTOR 58028-01-000 (2)	LAMP ASM-FLUORESCENT 12" 2 BULB W/SWITCH COOL WHITE BULB THIN-LITE CUTOUT-122 X 336
FLU-6	LAMP 130338-02-CHT SCREW G11-08-12U (4) CONNECTOR 58028-01-000 (2)	LAMP ASM-FLUORESCENT 18" 2 BULB SURFACE MOUNT WARM WHITE BULB W/SWITCH THIN-LITE
FLU-7	LAMP 153464-05-CHT SCREW G11-08-12U (4) CONNECTOR 58028-01-000 (2)	LAMP ASM-FLUORESCENT 12" 2 BULB W/SWITCH WARM WHITE BULB THIN-LITE CUTOUT-122 X 336
FLU-8	LAMP 173072-01-CHT SCREW G11-08-12U (2) CONNECTOR 58028-01-000 (2)	LAMP ASM-FLUORESCENT 18" ONE 8 WATT BULB W/SWITCH OPTRONICS
FLUN1	LAMP 91936-04-CHT SCREW G11-08-12U (4) CONNECTOR 58028-01-000 (2)	LAMP ASM-FLUORESCENT 12" 2 BULB W/O SWITCH THIN-LITE
FLUN2	LAMP 91936-03-CHT SCREW G11-08-12U (4) CONNECTOR 58028-01-000 (2)	LAMP ASM-FLUORESCENT 18" 2 BULB W/O SWITCH THIN-LITE
FLUN3	LAMP 153464-01-CHT SCREW G11-08-12U (4) CONNECTOR 58028-01-000 (2)	LAMP ASM-FLUORESCENT 12" 2 BULB W/O SWITCH COOL WHITE BULB THIN-LITE CUTOUT-122 X 336
FLUN4	LAMP 153464-03-CHT SCREW G11-08-12U (6) CONNECTOR 58028-01-000 (2)	LAMP ASM-FLUORESCENT 18" 2 BULB W/O SWITCH COOL WHITE BULB THIN-LITE CUTOUT-122 X 480
FLUN5	LAMP 153464-06-CHT SCREW G11-08-12U (6) CONNECTOR 58028-01-000 (2)	LAMP ASM-FLUORESCENT 18" 2 BULB W/O SWITCH WARM WHITE BULB THIN-LITE CUTOUT-122 X 480
FLUN6	LAMP 153464-04-CHT SCREW G11-08-12U (6) CONNECTOR 58028-01-000 (2)	LAMP ASM-FLUORESCENT 12" 2 BULB W/O SWITCH WARM WHITE BULB THIN-LITE CUTOUT-122 X 336

LAMP ASM-PACKAGE,MAKEUP LAMP

NO	PART NUMBER	DESCRIPTION
LMU3-1	LAMP 110235-01-CHT SCREW W/SPACER (SUPPLIED) CONNECTOR 58028-01-000 (2)	LAMP ASM-MAKEUP (W/O MIRROR) 3 BULB (SUPPLIED) PROGRESSIVE DYNAMICS
LMM3-2	LAMP 123774-03-CHT SCREW (SUPPLIED) BULB 123918-01-000 (3) CONNECTOR 58028-01-000 (2)	LAMP ASM-MAKEUP (W/MIRROR) 3 BULB GUSTOFSON
LMU3-2	LAMP 138116-01-CHT SCREW (SUPPLIED) BULB 123918-01-000 (3) CONNECTOR 58028-01-000 (2)	LAMP ASM-MAKEUP (W/O MIRROR) 3 BULB GUSTOFSON
LMU3-3	LAMP 162446-01-CHT SCREW (SUPPLIED) BULB 123918-01-000 (3) CONNECTOR 58028-01-000 (2)	LAMP ASM-MAKEUP (W/O MIRROR) 3 BULB GUSTOFSON
LMU4-1	LAMP 110235-02-CHT SCREW G11-08-16U (2) CONNECTOR 58028-01-000 (2)	LAMP ASM-MAKEUP (W/O MIRROR) 4 BULB PROGRESSIVE DYNAMICS
LMU4-2	LAMP 138116-02-CHT SCREW (SUPPLIED) BULB 123918-01-000 (4) CONNECTOR 58028-01-000 (2)	LAMP ASM-MAKEUP (W/O MIRROR) 4 BULB GUSTOFSON
LMU4-3	LAMP 162446-02-CHT SCREW (SUPPLIED) BULB 123918-01-000 (4) CONNECTOR 58028-01-000 (2)	LAMP ASM-MAKEUP (W/O MIRROR) 4 BULB GUSTOFSON
LMM4-2	LAMP 123774-01-CHT SCREW G11-08-16U (2) BULB 123918-01-000 (4) CONNECTOR 58028-01-000 (2)	LAMP ASM-MAKEUP (W/MIRROR) 4 BULB GUSTOFSON

LAMP ASM-PACKAGE,OTHER

NO	PART NUMBER	DESCRIPTION
LSH-1	LAMP 121935-01-CHT SCREW G11-08-16U (4) CONNECTOR 58028-01-000 (2)	LAMP ASM-SHOWER PROGRESSIVE DYNAMICS INC.
LSH-2	LAMP 164039-01-CHT SCREW G11-08-16U (3) CONNECTOR 58028-01-000 (2)	LIGHT-DOME,SHOWER
LSH-3	LAMP 164040-01-CHT SCREW G13-07-12U (3) CONNECTOR 58028-01-000 (2)	LIGHT-DOME,SHOWER GLASS
LCR-1	LAMP 61424-01-000 SCREW G11-08-12U (4) CONNECTOR 58028-01-000 (2)	LAMP ASM-COURTESY,AISLE RAMCO (RECTANGULAR)
LCS-1	LAMP 108354-01-CHT SCREW G11-08-12U (4) CONNECTOR 58028-01-000 (2)	LAMP ASM-COURTESY,AISLE ITC MARINE (SQUARE)
READ-1	LIGHT-READING 132427-01-CHT SCREW SUPPLIED W/ LIGHT CLIP-U 141395-02-CHT (2) CONNECTOR 58028-01-000 (2)	LIGHT-READING,SWIVEL,ROUND 1 BULB
READ-2	LIGHT-READING 128786-02-CHT SCREW G11-08-16J (2) BULB 123917-01-000 CONNECTOR 58028-01-000 (2)	LIGHT,READING,SWIVEL
READ-3	LIGHT-READING 170833-01-CHT SCREW SUPPLIED W/LIGHT CONNECTOR 58028-01-000 (2)	LIGHT,READING,HAL
READ-4	LIGHT-READING, LED,FLEX 174060-01-CHT SCREW SUPPLIED W/LIGHT CONNECTOR 58028-01-000 (2)	LIGHT,READING,LED,FLEX
READ-5	LIGHT-READING, LED,SWIVEL 174815-01-CHT SCREW SUPPLIED W/LIGHT CONNECTOR 58028-01-000 (2)	LIGHT,READING, LED SWIVEL .05 A

LAMP ASM-PACKAGE,PANCAKE

NO	PART NUMBER	DESCRIPTION
LF1-3	LAMP 170693-01-CHT SCREW G11-08-16U (4) CONNECTOR 58028-01-000 (2)	LAMP ASM, FROSTED LENS, 1 BULB W/SWITCH GUSTAFSON
LF2-3	LAMP 170693-04-CHT SCREW G11-08-24U (4) CONNECTOR 58028-01-000 (2)	LAMP ASM, FROSTED LENS, 2 BULB W/SWITCH GUSTAFSON
LO1-3	LAMP 170693-02-CHT SCREW G11-08-16U (4) CONNECTOR 58028-01-000 (2)	LAMP ASM, OPTI CLEAR LENS, 1 BULB W/SWITCH GUSTAFSON
LO2-3	LAMP 170693-05-CHT SCREW G11-08-24U (4) CONNECTOR 58028-01-000 (2)	LAMP ASM, OPTI CLEAR LENS, 2 BULB W/SWITCH GUSTAFSON
LF1N3	LAMP 170693-03-CHT SCREW G11-08-16U (4) CONNECTOR 58028-01-000 (2)	LAMP ASM, FROSTED LENS, 1 BULB W/O SWITCH GUSTAFSON
LFSN3	LAMP 170693-06-CHT SCREW G11-08-24U (4) CONNECTOR 58028-01-000 (2)	LAMP ASM, SINGLE FROSTED LENS, 2 BULB W/O SWITCH GUSTAFSON
LOSN3	LAMP 170693-07-CHT SCREW G11-08-24U (4) CONNECTOR 58028-01-000 (2)	LAMP ASM, OPTICLEAR LENS, 2 BULB W/O SWITCH GUSTAFSON
LO1N3	LAMP 170693-08-CHT SCREW G11-08-16U (4) CONNECTOR 58028-01-000 (2)	LAMP ASM, OPTICLEAR LENS, 1 BULB W/O SWITCH GUSTAFSON

LEGEND

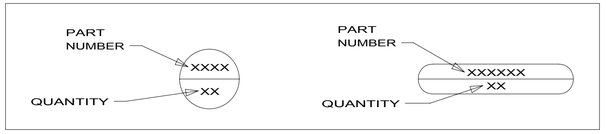

FIRST USED: 96 MH'S

DO NOT SCALE DRAWING

TITLE: PART LISTING-ELECTRICAL

SHEET 4 | PART NO 121339 | REV

2/17/2010

DWG NO 121339

ANTENNA ASM-PACKAGE

NO	PART NUMBER	DESCRIPTION
ANT-1	ANTENNA 76319-24-000 HARDWARE-INTERIOR 76319-25-000 BUMPER 69726-02-000 (2) 1 CLIP 80734-02-000	ROOF MOUNT TV ANTENNA ASM 25.5" MAST 600 MAX COAX LENGTH
ANT-2	ANTENNA 076319-23-000(UP TO 05-31-09) 173519-01-CHT(AFTER 06-01-09) HARDWARE-INTERIOR 76319-25-000 BUMPER 69726-02-000 (2) 1 ADAPTER SUPPLIED W/ANTENNA	ROOF MOUNT TV ANTENNA ASM 44.5" MAST 600 MAX COAX LENGTH
ANT-2W	ANTENNA 076319-23-000(UP TO 05-31-09) 173519-01-CHT(AFTER 06-01-09) HARDWARE-INTERIOR 76319-25-000 BUMPER 69726-02-000 (2) 1 ADAPTER SUPPLIED W/ANTENNA WEDGE 76319-26-000	ROOF MOUNT TV ANTENNA ASM 44.5" MAST 600 MAX COAX LENGTH
ANTA-1	ANTENNA 158270-01-CHT BUMPER 69726-02-000 (2) 1 ADAPTER SUPPLIED W/ANTENNA ANTENNA-WINGMAN, ACCESSORY 173519-03-CHT	ROOF MOUNT TV ANTENNA ASM AUTOMATIC 600 MAX COAX LENGTH
ANT-3	ANTENNA-TV ROOF MNT,ROUND 167632-01-CHT PLATE-ROOF, CABLE ENTRY 146488-01-000 SCREW G67-10-129 (10) CABLE ASM-COAX 87105-01-006 ADAPTER 82134-01-000	ROOF MOUNT OMNI- DIRECTIONAL ANTENNA MOUNTING SCREWS SUPPLIED WITH ANTENNA
ANT-4	ANTENNA 173519-01-CHT HARDWARE-INTERIOR 76319-25-000 BUMPER 69726-02-000 (2) 1 ADAPTER SUPPLIED W/ANTENNA ANTENNA-HANDLE EXTENSION 173519-02-CHT	ROOF MOUNT TV ANTENNA ASM 44.5" MAST 600 MAX COAX LENGTH

SENSORS

NO	PART NUMBER	DESCRIPTION
LPGD	LP GAS DETECTOR 150138-03-CHT SCREW G68-06-10U (2)	DETECTOR-LP GAS

PANELS

NO	PART NUMBER	DESCRIPTION
SOLAR	PANEL-SOLAR 10 WATT 151647-01-000 (UP TO 03-14-10) 176161-01-000 (AFTER 03-15-10) SCREW G11-08-12U (4)	SOLAR PANEL

ANTENNA ASM-PACKAGE

ANTEXT-1	CABLE ASM-EXTENS 77069-02-000	RADIO ANTENNA CABLE EXTENSION 2400MM USABLE LENGTH
ANTKIT-1	ADAPTER-PLATE 76319-06-000 SCREW G11-08-08T (6) CLIP-WIRE 80734-02-000 SCREW G11-08-08T	PLATE ASM-ADAPTERS CABLE ROOF MOUNTING PLATE W/ CABLE-CABLE ADAPTER, FITTINGS, AND CABLE RETAINING CLIP
ANT-R	ANTENNA-RADIO 90944-01-000 EXTENDER-SHAFT ANTENNA 109889-04-000 BRACKET-ANTENNA GROUND 147741-01-CHT	ROOF MOUNT RADIO ANTENNA
ANTEXT-2	CABLE ASM-EXTENS 77069-03-000	RADIO ANTENNA CABLE EXTENSION 6600 MM USABLE LENGTH
ANT-A	ANTENNA-RADIO 90944-01-000 EXTENDER-SHAFT 76 MM 171825-01-000 (2) BRACKET-GROUND 147741-01-CHT NUT OMD01K-06-000 (2)	ROOF MOUNT RADIO ANTENNA THICK ROOF

SATELLITE DISH INSTL

NO	PART NUMBER	DESCRIPTION
DM-1	SATELLITE DISH 137135-02-000 SCREW G67-10-12B (8) PLATE & BRACKET (SUPPLIED) SCREW G67-10-12B (10)	SATELLITE DISH ANTENNA ASM MANUAL SETUP
DA-1	SATELLITE DISH 163598-01-CHT PLATE-ROOF,CABLE ENTRY QUAD 146488-03-000 SCREW G67-10-12U (8) (FOR PLATE) SCREW G39-10-12U (12) (FOR SATELLITE DISH)	SATELLITE DISH ANTENNA ASM AUTOMATIC SETUP
DI-1	SATELLITE DISH 154474-04-CHT SCREW G39-10-12B (12) PLATE 146488-01-000 SCREW G67-10-12B (10)	SATELLITE DISH ANTENNA ASM IN MOTION SETUP

SATELLITE DISH INSTL

NO	PART NUMBER	DESCRIPTION
DA-2	SATELLITE DISH 163598-01-CHT PLATE-ROOF,CABLE ENTRY QUAD 146488-03-000 CABLE ASM-COAX 9" 163598-04-000 ADAPTOR-CABLE TO CABLE 82134-01-000 SCREW G67-10-12U (8) (FOR PLATE) SCREW G39-10-12U (12) (FOR SATELLITE DISH)	SATELLITE DISH ANTENNA ASM AUTOMATIC SETUP
DI-2	SATELLITE DISH 154474-04-CHT PLATE-ROOF,CABLE ENTRY QUAD 146488-03-000 CABLE ASM-COAX 9" 163598-04-000 ADAPTOR-CABLE TO CABLE 82134-01-000 SCREW G67-10-12U (8) (FOR PLATE) SCREW G39-10-12U (12) (FOR SATELLITE DISH)	SATELLITE DISH ANTENNA ASM AUTOMATIC SETUP
DM-2	SATELLITE DISH 137135-05-000 PLATE-ROOF,ENTRY (SUPPLIED WITH SATELLITE DISH) SCREW G67-10-12U (8) (FOR ROOF PLATE) SCREW G67-10-12U (10) (FOR SATELLITE DISH)	SATELLITE DISH ANTENNA ASM MANUAL SETUP

LEGEND

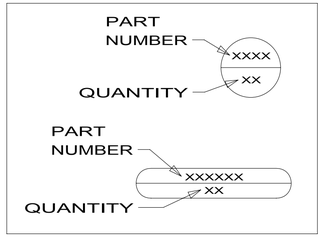

1 ADD BUMPER TO BOTTOM SIDE OF ANTENNA WINGS TO PREVENT DAMAGE TO ROOF.

FIRST USED
96 MH'S

DO NOT SCALE DRAWING

TITLE:
PART LISTING-ELECTRICAL

SHEET 5 | PART NO 121339 | REV

2/17/2010

DWG NO 121339

RECEPTACLE PACKAGE-GFI

NO	PART NUMBER	DESCRIPTION
GFI US	RECEPTACLE 163319-01-CHT BOX 91910-02-000 WIRE-BONDING 133678-03-000 SCREW G13-07-12B (4) CONNECTOR 8313-01-000 TUBING-VINYL 8041-02-000 (300MM) 1	GFI RECEPTACLE WITH COVER AND BOX FOR US APPLICATION 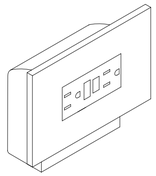
GFI CAN	RECEPTACLE 163319-01-CHT BOX 91910-01-000 WIRE-BONDING 133678-03-000 SCREW G13-07-12B (4) CONNECTOR 8313-01-000 TUBING-VINYL 8041-02-000 (300MM) 1	GFI RECEPTACLE WITH COVER AND BOX FOR CANADA APPLICATION 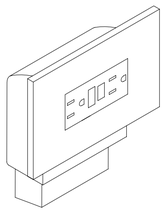

RECEPTACLE PACKAGE-GFI

NO	PART NUMBER	DESCRIPTION
GFI-1 US	RECEPTACLE 163319-01-CHT BOX 133070-01-000 WIRE-BONDING 133678-03-000 SCREW G13-07-12B (4) CONNECTOR 8313-01-000 TUBING-VINYL 8041-02-000 (300MM) 1	GFI RECEPTACLE WITH COVER AND BOX FOR US APPLICATION 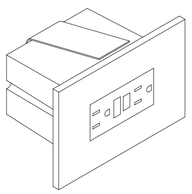
GFI-1 CAN	RECEPTACLE 163319-01-CHT BOX 133070-02-000 WIRE-BONDING 133678-03-000 SCREW G13-07-12B (4) CONNECTOR 8313-01-000 TUBING-VINYL 8041-02-000 (300MM) 1	GFI RECEPTACLE WITH COVER AND BOX FOR CANADA APPLICATION 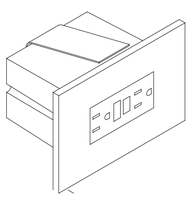

SPACERS

NO	PART NUMBER	DESCRIPTION
SP-01	SPACER 102568-01-XXX	STANDARD 110V RECEPTACLE SPACER (WOOD,VYL RAP,OG) 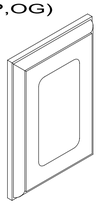
SP-02	SPACER 102568-02-XXX	WOOD SPACER FOR CEILING MOUNTED A/C PREP BOX (US) (WOOD,VYL RAP,OG) 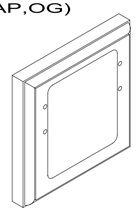
SP-03	SPACER 102568-03-XXX	WOOD SPACER FOR CEILING MOUNTED A/C PREP BOX (CANADA) (WOOD,VYL RAP,OG) 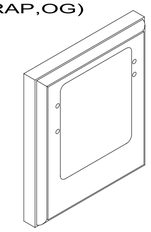
SP-04	SPACER 133713-01-CHT	STANDARD 110V RECEPTACLE SPACER (WOOD,VYL RAP,BEV) 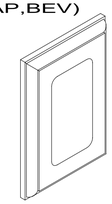
SP-05	SPACER 133713-20-XXX	STANDARD 110V RECEPTACLE SPACER (WOOD,BEV) 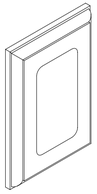
SP-21	SPACER 126052-01-XXX	WOOD SPACER FOR 1 - 110V RECEPTACLE AND 1 - REAR TV (12V) JACK (WOOD,BEV) 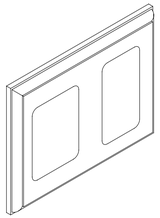

LEGEND

MISC.	SPACER
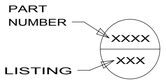	

1 APPLY TUBING TO BARE GROUND WIRES.

NOTES:

FIRST USED 96 MH'S

DO NOT SCALE DRAWING

TITLE: PART LISTING-ELECTRICAL

SHEET 6 | PART NO 121339 | REV

2/17/2010

DWG NO 121339

PREP-A/C,RECESSED (W/OUT FACTORY A/C)

NO	PART NUMBER	DESCRIPTION
PREP A/C-US	BOX 91910-02-000 COVER 84099-02-CHT LABEL 91243-01-000 SCREW G13-07-12B (4) CONNECTOR 8313-01-000 (3)	BOX AND EQUIPMENT USED FOR A/C PREP (W/OUT FACTORY A/C). US APPLICATION (RECESSED IN ROOF) 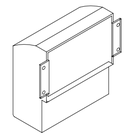
PREP A/C-CAN	BOX 91910-01-000 COVER 84099-02-CHT LABEL 91243-01-000 SCREW G13-07-12B (4) CONNECTOR 8313-01-000 (3)	BOX AND EQUIPMENT USED FOR A/C PREP (W/OUT FACTORY A/C). CANADA APPLICATION (RECESSED IN ROOF) 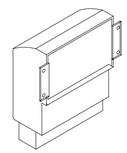

CONNECTION BOX-POWER CORD

NO	PART NUMBER	DESCRIPTION
J-PC 30 J-PC 30-US J-PC 30-CA	BOX 8289-01-000 COVER 8294-01-000 SCREW G67-10-10B (2) WIRE ASM-GROUND 133678-02-000 CONNECTOR 8314-01-000 (3) CONNECTOR 8356-02-000 CONNECTOR (PC) 8355-01-000	CONNECTION BOX IN POWER CORD COMPT FOR POWER CORD (US & CA APPLICATION) 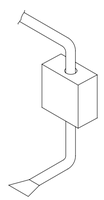

CONNECTION BOX-GENERATOR RECEPTACLE

NO	PART NUMBER	DESCRIPTION
J-RCP 30 J-RCP 30-US J-RCP 30-CA	BOX 8289-01-000 RECEPTACLE 24924-02-000 COVER 69238-01-000 SCREW G67-10-10B (2) WIRE ASM-GROUND 133678-02-000 133678-04-000 CONNECTOR 8314-01-000 TUBING-VINYL 8041-02-000 (150MM) 1	CONNECTION BOX IN POWER CORD COMPT FOR THE GENERATOR RECEPTACLE (US & CA APPLICATION) 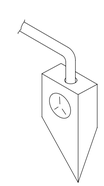

CONNECTION BOX, GENERATOR SERVICE FEED

NO	PART NUMBER	DESCRIPTION
J-GEN 30 J-GEN 30-US J-GEN 30-CA	BOX 8289-01-000 COVER 8294-01-000 SCREW G67-10-10B (2) WIRE ASM-GROUND 133678-02-000 WIRE NUT-GREY 8314-01-000 (3) CONNECTOR-WIRE 8356-01-000	BOX AND EQUIPMENT USED FOR CONNECTING THE GENERATOR LEADS TO THE SERVICE ENTRANCE WIRES (US & CA APPLICATION) 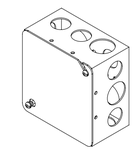

PREP-A/C,SURFACE (W/OUT FACTORY A/C)

NO	PART NUMBER	DESCRIPTION
PREP SURF	BOX 93603-01-000 COVER 53337-01-000 LABEL 91243-01-000 WIRE-BONDING 8019-01-000 SCREW G11-08-12B (2) TERMINAL 8328-01-000 CONNECTOR 8313-01-000 (2) CONNECTOR 8311-01-000	SURFACE MOUNT, US AND CANADA, BOX AND EQUIPMENT FOR A/C PREP (W/OUT FACTORY A/C). TYPICALLY LOCATED ON OVERHEAD CABINET INNER WALL OR ON CEILING. 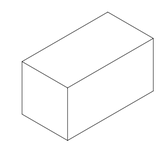

LEGEND

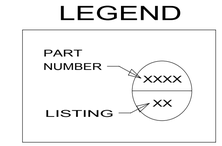

1 APPLY TUBING TO BARE GROUND WIRES.

NOTES:

FIRST USED	96 MH'S
	DO NOT SCALE DRAWING
TITLE:	PART LISTING-ELECTRICAL
SHEET 7	PART NO 121339 REV

2/17/2010

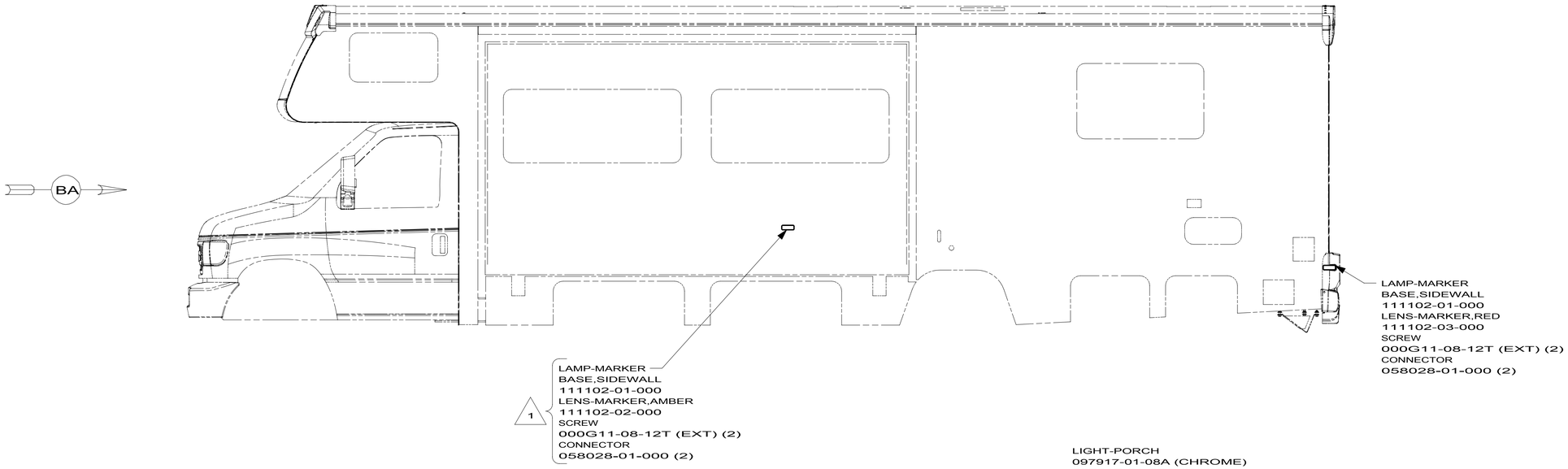

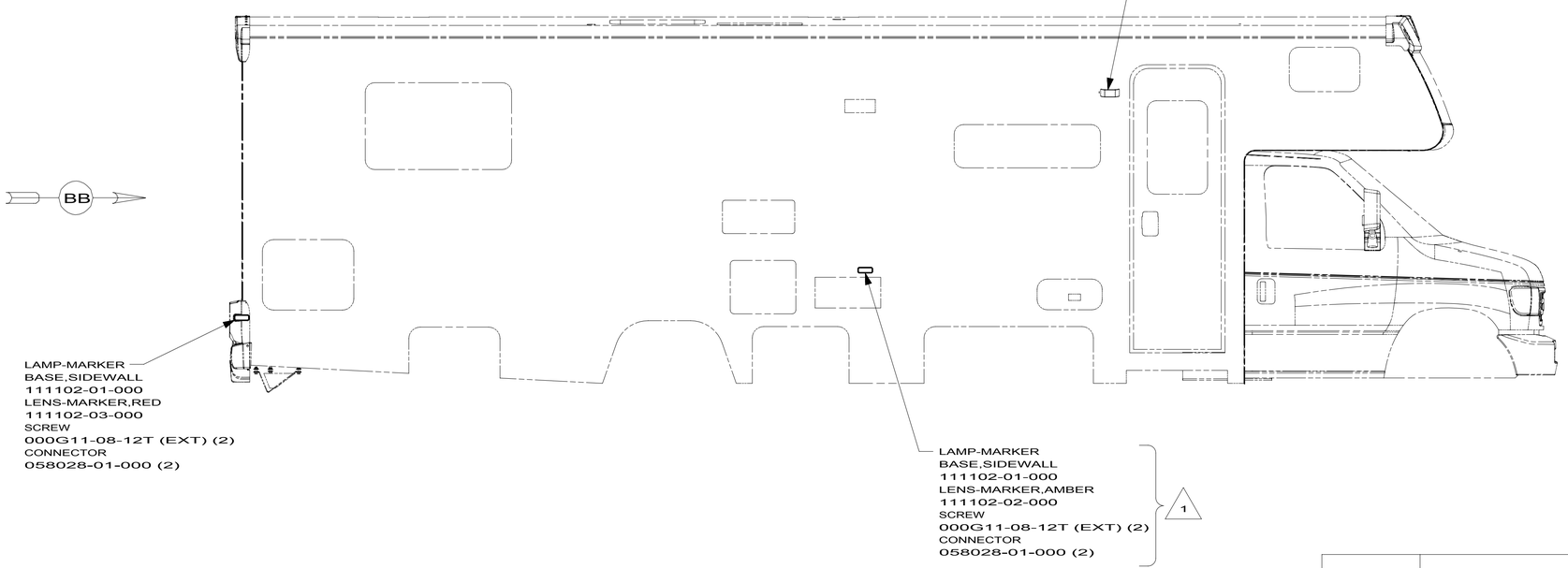

265 CODES/STANDARDS-CSA/CMVSS

1B1 CODES/STANDARDS USA

1B1 265

10 300-SERIES

FOR ELECTRICAL TORQUE SPECIFICATIONS SEE DWG NO. 128783-01-000

X-X

FOR ELECTRICAL CALLOUTS SEE DWG NO. 121339-01-000

1 USED ONLY WITH 329B, 331C, 330D.

NOTES:

WIRING INSTL-EXTERIOR LAMPS

1 2 170531

4/1/2010

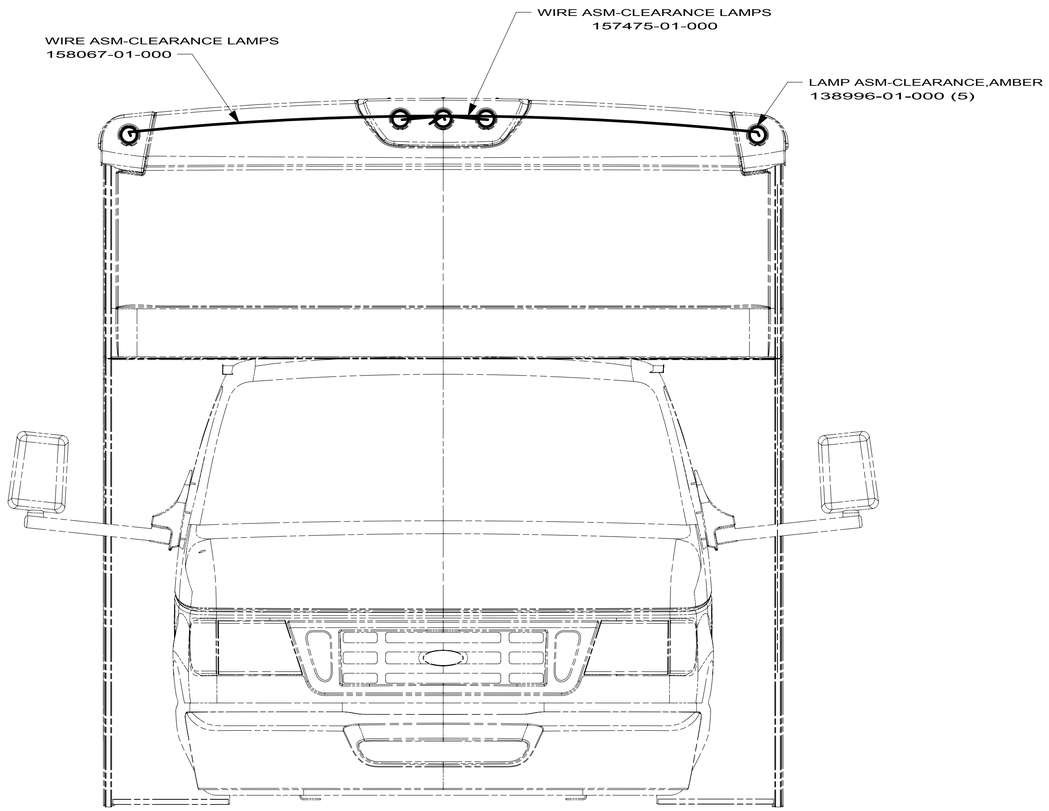

VIEW BA

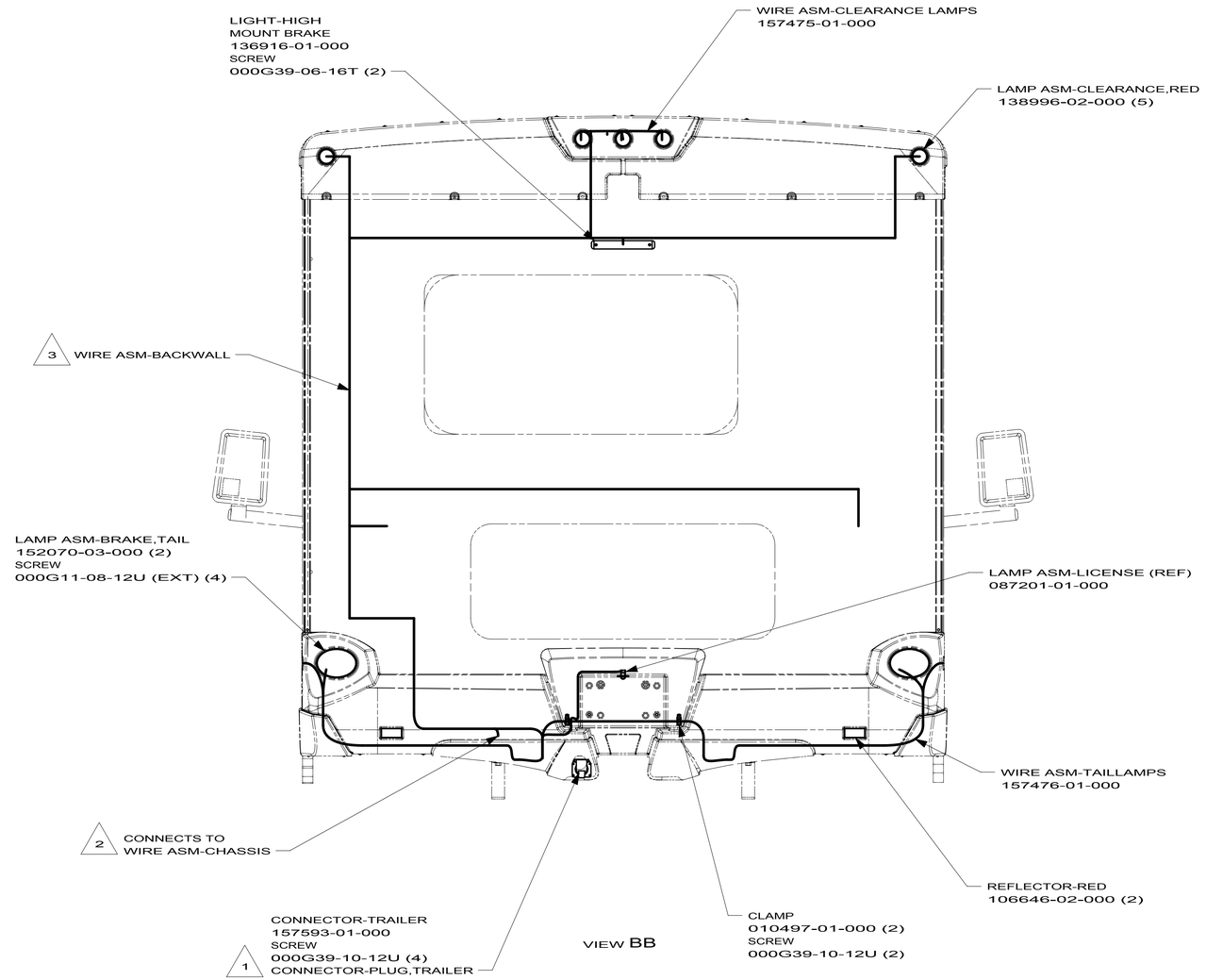

VIEW BB

265 CODES/STANDARDS-CSA/CMVSS

1B1 CODES/STANDARDS USA

1B1 265

3 LOCATED IN BACKWALL ASM.

2 SECURE WIRE ASM-CHASSIS BELOW COACH WITH CLAMP 010495-01-000 AND SCREW 000G67-10-12B AS NEEDED.

1 CONNECTOR-PLUG,TRAILER 146246-01-000 TO BE SUPPLIED LOOSE IN COACH WITH TRAILER TOW PACKAGE.

NOTES:

FOR ELECTRICAL TORQUE SPECIFICATIONS SEE DWG NO. 128783-01-000	X-X FOR ELECTRICAL CALLOUTS SEE DWG NO. 121339-01-000

10 300-SERIES

WIRING INSTL-EXTERIOR LAMPS

2 170531

4/1/2010

097917-01-08A/09A

KEY	PART NUMBER	U/M	DESCRIPTION	VENDOR NO.
	097917-01-700	EA	LENS-LIGHT, CLEAR	30-78-021

COPYRIGHT © 2009 WINNEBAGO INDUSTRIES INC.

DWG NO 169847

300-Series
700-Series
169847-02

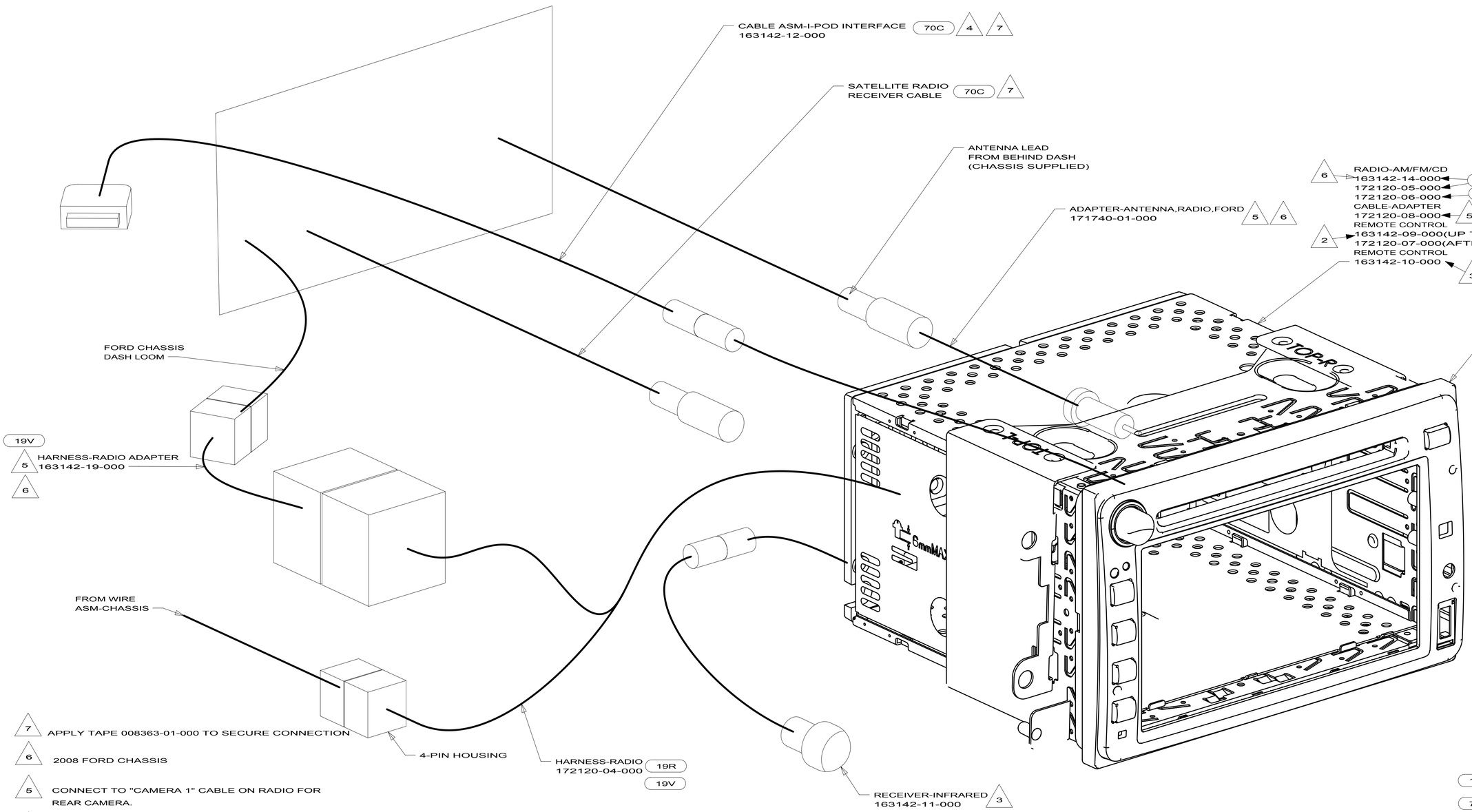

7 APPLY TAPE 008363-01-000 TO SECURE CONNECTION

6 2008 FORD CHASSIS

5 CONNECT TO "CAMERA 1" CABLE ON RADIO FOR REAR CAMERA.

4 PLUG I-POD CABLE INTO LEAD ON BACK OF RADIO MARKED 'I-POD'. ROUTE CABLE TO THE LEFT OF RADIO. WIRE TIE EXCESS CABLE UNDER DASH IN THE AREA LEFT OF THE RADIO. LEAVE 200 MM OF CABLE IN THE MOTOR COVER BEVERAGE TRAY. MAKE SURE CABLE DOES NOT GET PINCHED BY MOTOR COVER.

3 INSTALL PER DRAWING 170205.

2 TO BE SUPPLIED LOOSE IN WINNEBAGO OWNERS CASE.

1 ENGAGE T-RAIL ON BOTTOM OF RADIO UNTIL LOCKED IN PLACE.

NOTES:

19R RADIO/REARVIEW MONITOR SYS

70C RADIO - SATELLITE

19V RADIO-AM/FM STEREO CD PLAYER

265 CODES/STANDARDS-CSA/CMVSS

1B1 CODES/STANDARDS USA

1B1 265

FOR ELECTRICAL TORQUE SPECIFICATIONS SEE DWG NO. 128783-01-000

X-X FOR ELECTRICAL CALLOUTS SEE DWG NO. 121339-01-000

FIRST USED 300,700-SERIES

DO NOT SCALE DRAWING

TITLE: RADIO INSTL

SHEET 2 | PART NO 169847 | REV

1/21/2010

DRAWING NO.	MODEL	SHEETS
170529-01	329B	1,2,3,4,5
170529-02	N/A	N/A
170529-03	N/A	N/A
170529-04	331C	1,2,3,4,6

170529

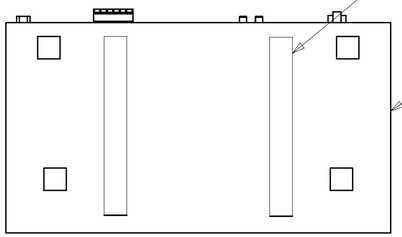

DETAIL AA

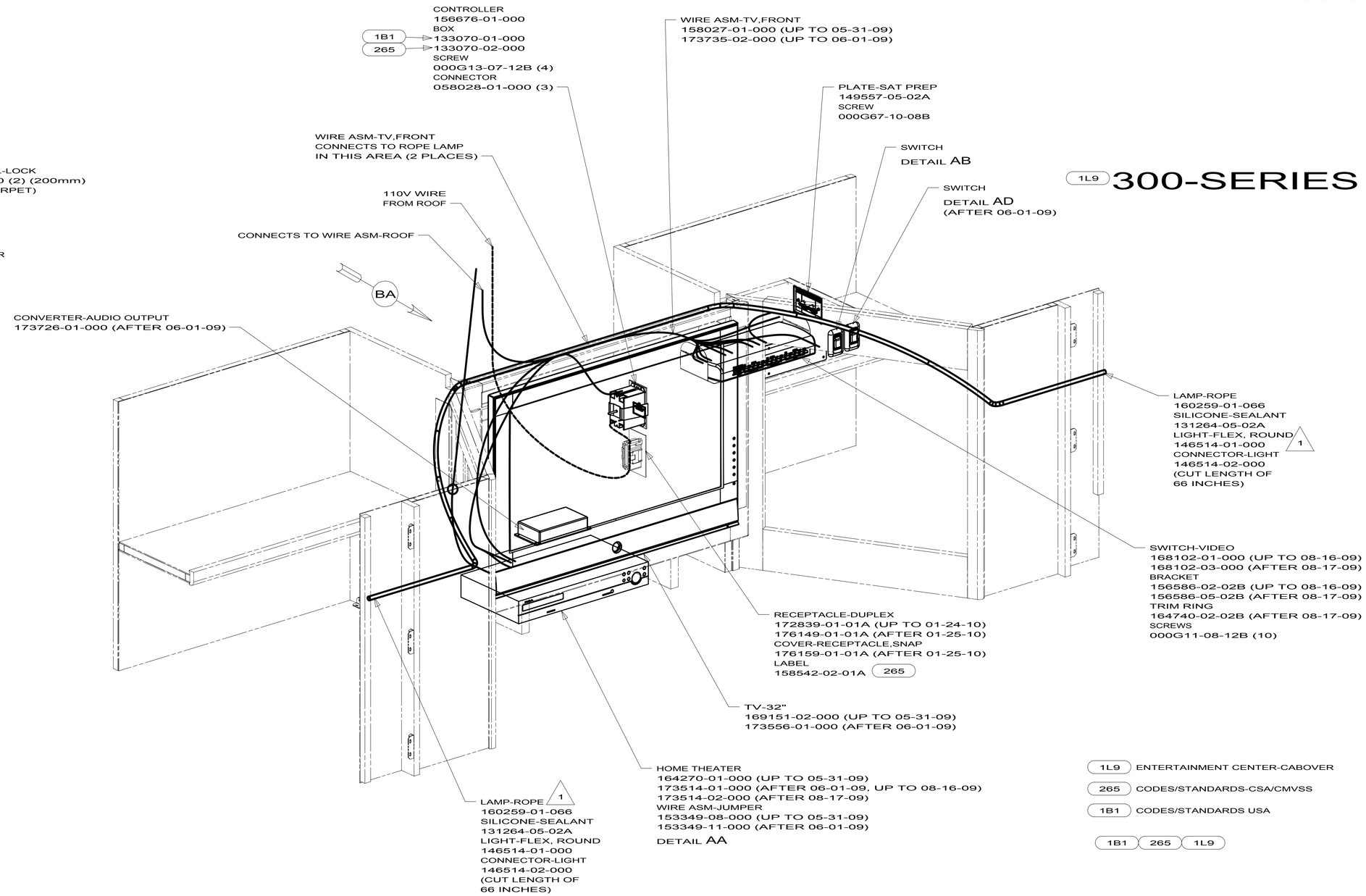

1L9 ENTERTAINMENT CENTER-CABOVER

265 CODES/STANDARDS-CSA/CMVSS

1B1 CODES/STANDARDS USA

1B1 265 1L9

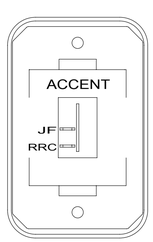

SWITCH-ROCKER
135740-01-01A
SWITCH-BASE
135741-01-01A
SWITCH-BEZEL
135742-50-02A
SCREW
000G11-08-08B (2)

DETAIL AB

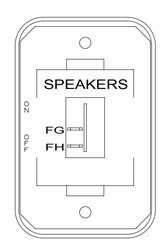

SWITCH-ROCKER
135740-01-01A
SWITCH-BASE
135741-01-01A
SWITCH-BEZEL
135742-60-02A
SCREW
000G11-08-08B (2)

DETAIL AD
(AFTER 06-01-09)

FOR ELECTRICAL
TORQUE
SPECIFICATIONS
SEE DWG NO.
128783-01-000

X-X

FOR
ELECTRICAL
CALLOUTS
SEE DWG NO.
121339-01-000

10 300-SERIES

3. ALL WIRES TO BE SECURED WITH CLAMP 010495-01-000 OR CLIP 080734-01-000 EVERY 600MM. USE SCREW 000G67-10-12B UNLESS OTHERWISE SPECIFIED.

2. 110V WIRE TO BE CLAMPED WITH CLAMP 010497-05-000 WITHIN 200MM OF OULET BOXED. USE SCREW 000G67-10-12B.

1 STAPLE ROPE LAMP TO CABINET EVERY 150MM SO THAT THE ROPE LAMP FOLLOWS THE CONTOUR OF THE CABNINET.

NOTES:

WIRING INSTL-TV/DVD

1 6 170529

2/11/2010

1L9 300-SERIES (UP TO 05-31-09)

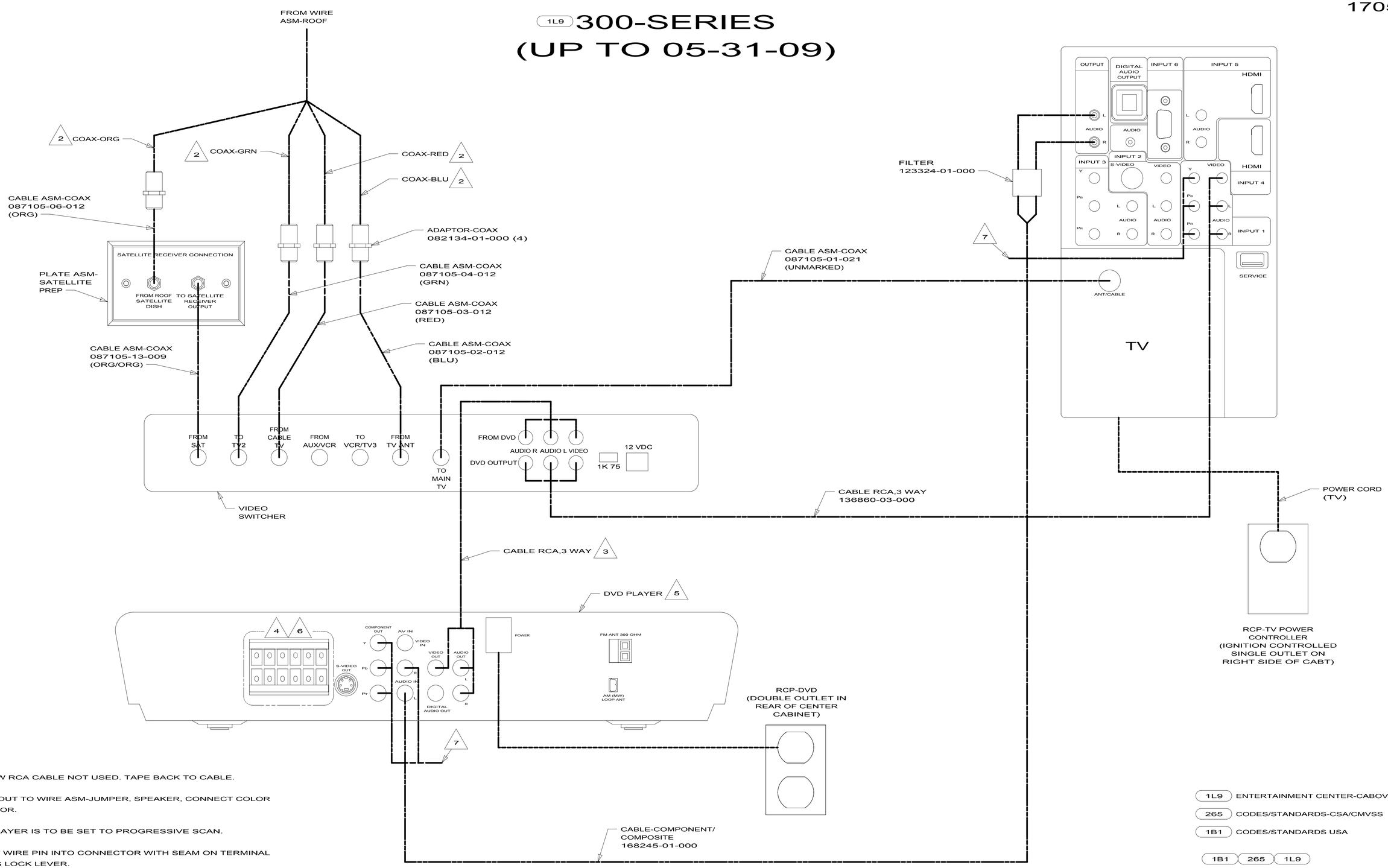

7 YELLOW RCA CABLE NOT USED. TAPE BACK TO CABLE.

6 AUDIO OUT TO WIRE ASM-JUMPER, SPEAKER, CONNECT COLOR TO COLOR.

5 DVD PLAYER IS TO BE SET TO PROGRESSIVE SCAN.

4 INSERT WIRE PIN INTO CONNECTOR WITH SEAM ON TERMINAL FACING LOCK LEVER.

3 CABLE IS SUPPLIED WITH DVD.

2 COAX IS FROM WIRE ASM-ROOF.

1. ALL CONNECTIONS ARE SHOWN FROM BACKSIDE OF COMPONENTS.

NOTES:

DETAIL BA

FOR ELECTRICAL TORQUE SPECIFICATIONS SEE DWG NO. 128783-01-000	X-X FOR ELECTRICAL CALLOUTS SEE DWG NO. 121339-01-000

1L9 ENTERTAINMENT CENTER-CABOVER

265 CODES/STANDARDS-CSA/CMVSS

1B1 CODES/STANDARDS USA

1B1 265 1L9

10 300-SERIES

WIRING INSTL-TV/DVD

2A 170529

2/11/2010

1L9 300-SERIES (AFTER 06-01-09)

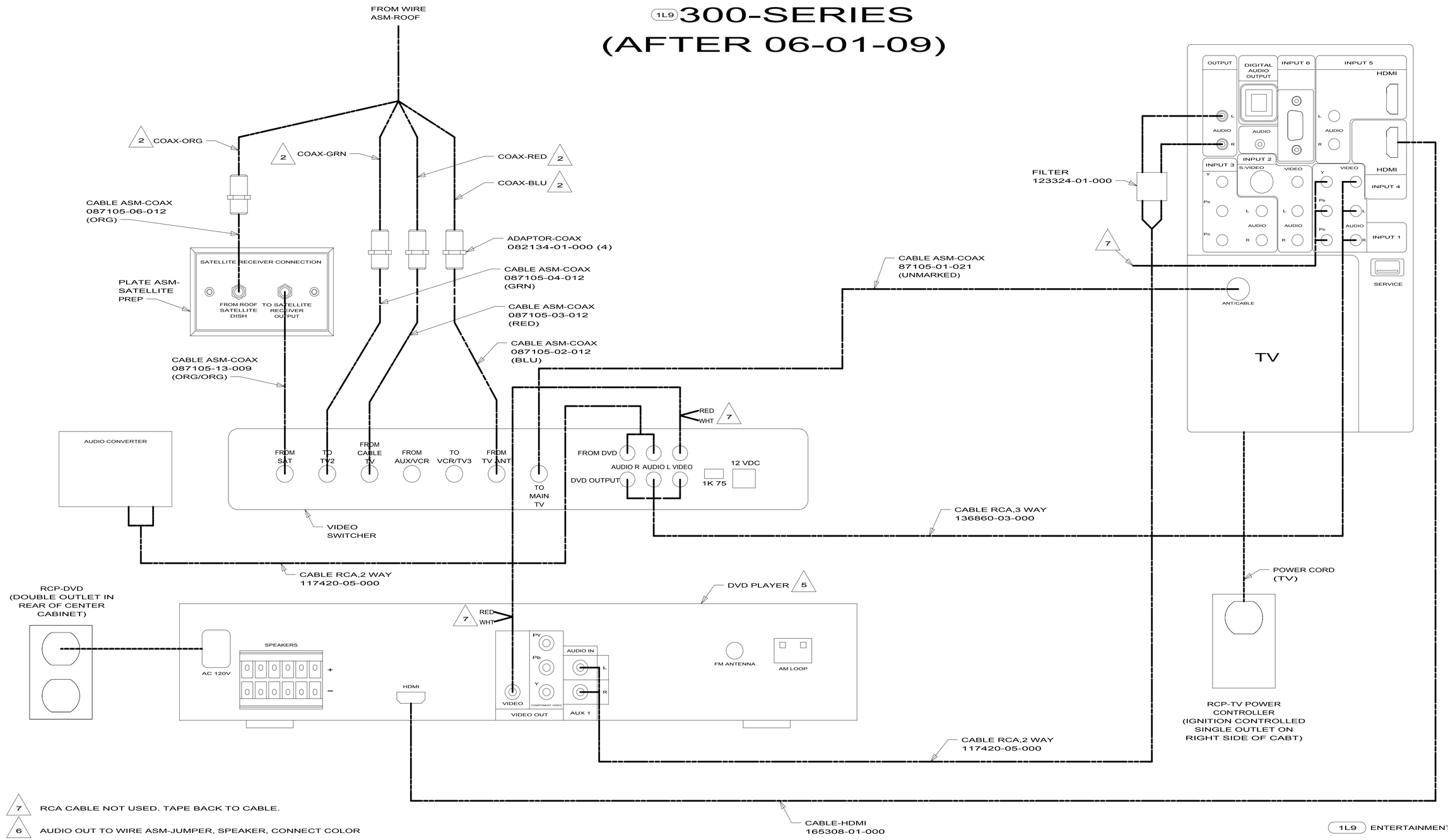

7 RCA CABLE NOT USED. TAPE BACK TO CABLE.

6 AUDIO OUT TO WIRE ASM-JUMPER, SPEAKER, CONNECT COLOR TO COLOR.

5 DVD PLAYER IS TO BE SET TO PROGRESSIVE SCAN.

4 INSERT WIRE PIN INTO CONNECTOR WITH SEAM ON TERMINAL FACING LOCK LEVER.

3 CABLE IS SUPPLIED WITH DVD.

2 COAX IS FROM WIRE ASM-ROOF.

1. ALL CONNECTIONS ARE SHOWN FROM BACKSIDE OF COMPONENTS.

NOTES:

DETAIL BA

FOR ELECTRICAL TORQUE SPECIFICATIONS SEE DWG NO. 128783-01-000

X-X FOR ELECTRICAL CALLOUTS SEE DWG NO. 121339-01-000

1L9 ENTERTAINMENT CENTER-CABOVER

265 CODES/STANDARDS-CSA/CMVSS

1B1 CODES/STANDARDS USA

1B1 265 1L9

10 300-SERIES

WIRING INSTL-TV/DVD

2B 170529

2/11/2010

1MK 300-SERIES

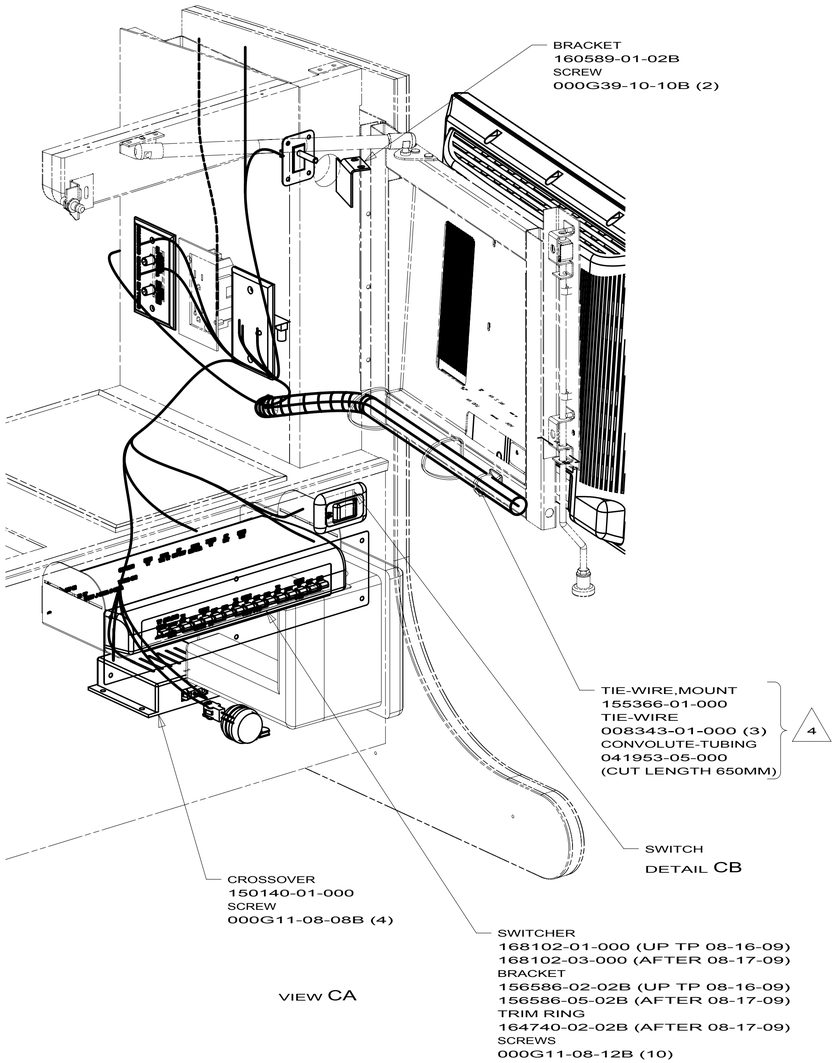

VIEW CA

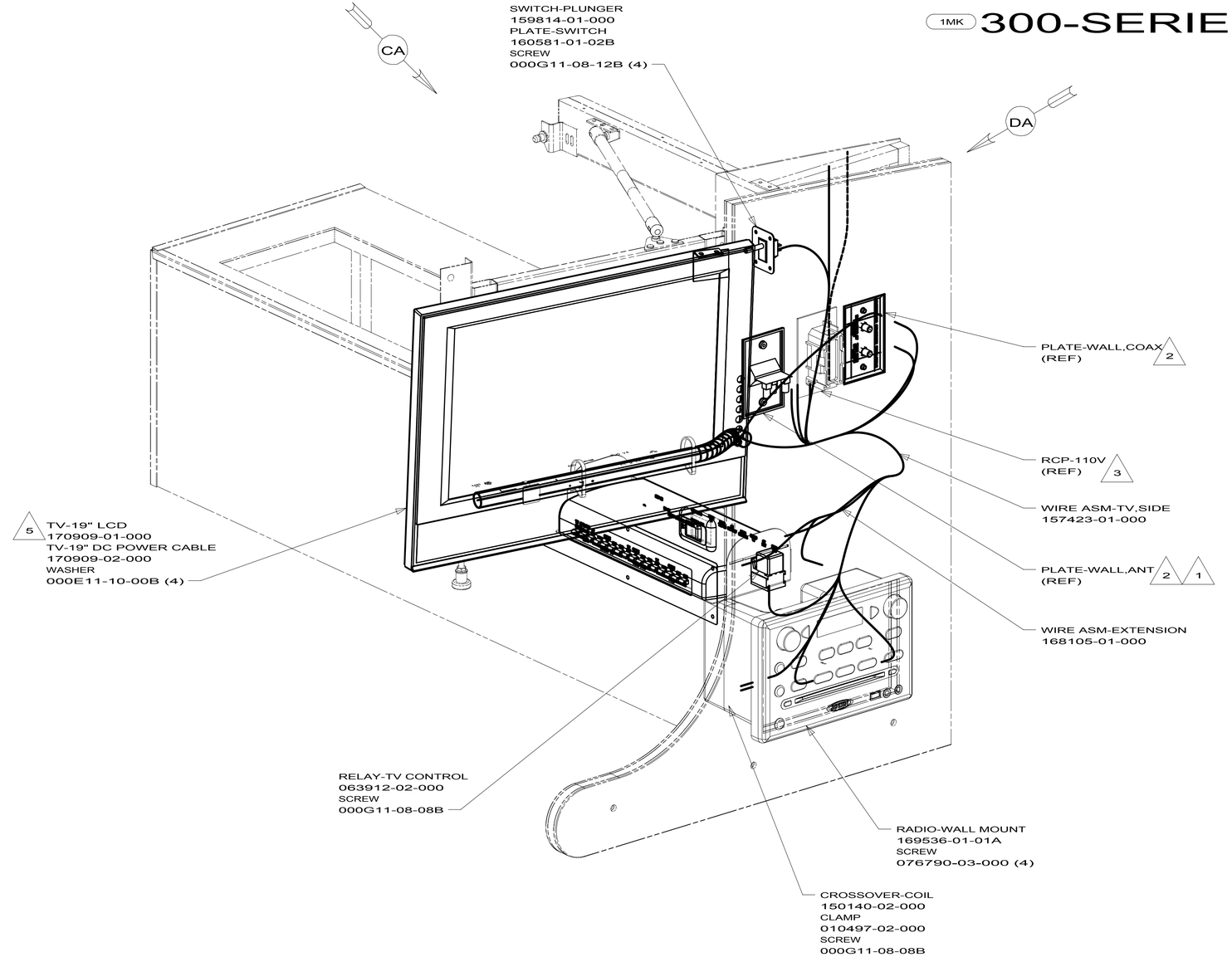

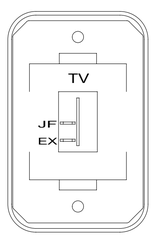

SWITCH-ROCKER
135740-01-01A
SWITCH-BASE
135741-01-01A
SWITCH-BEZEL
135742-45-02A
SCREW
000G11-08-08B (2)

DETAIL CB

NOTES:

5 USE SCREWS SUPPLIED WITH TV.

4 COVER WIRES, COAX, AND RCA-CABLES THAT ARE ROUTED TO THE TV WITH CONVOLUTE-TUBING AND SECURE TO TV-SUPPORT WITH TIE-WIRE.

3 SEE WIRING INSTL-BODY,110V FOR ADDITIONAL INFORMATION.

2 SEE WIRING INSTL-BODY,12V FOR ADDITIONAL INFORMATION.

1 NOT USED WITH 1MK

1MK TV-19"DC,STEREO SYS,VDEO SEL

265 CODES/STANDARDS-CSA/CMVSS

1B1 CODES/STANDARDS USA

1B1 265 1MK

FOR ELECTRICAL TORQUE SPECIFICATIONS SEE DWG NO. 128783-01-000	X-X FOR ELECTRICAL CALLOUTS SEE DWG NO. 121339-01-000

10 300-SERIES

WIRING INSTL-TV/DVD

3 170529

2/11/2010

1MK 300-SERIES

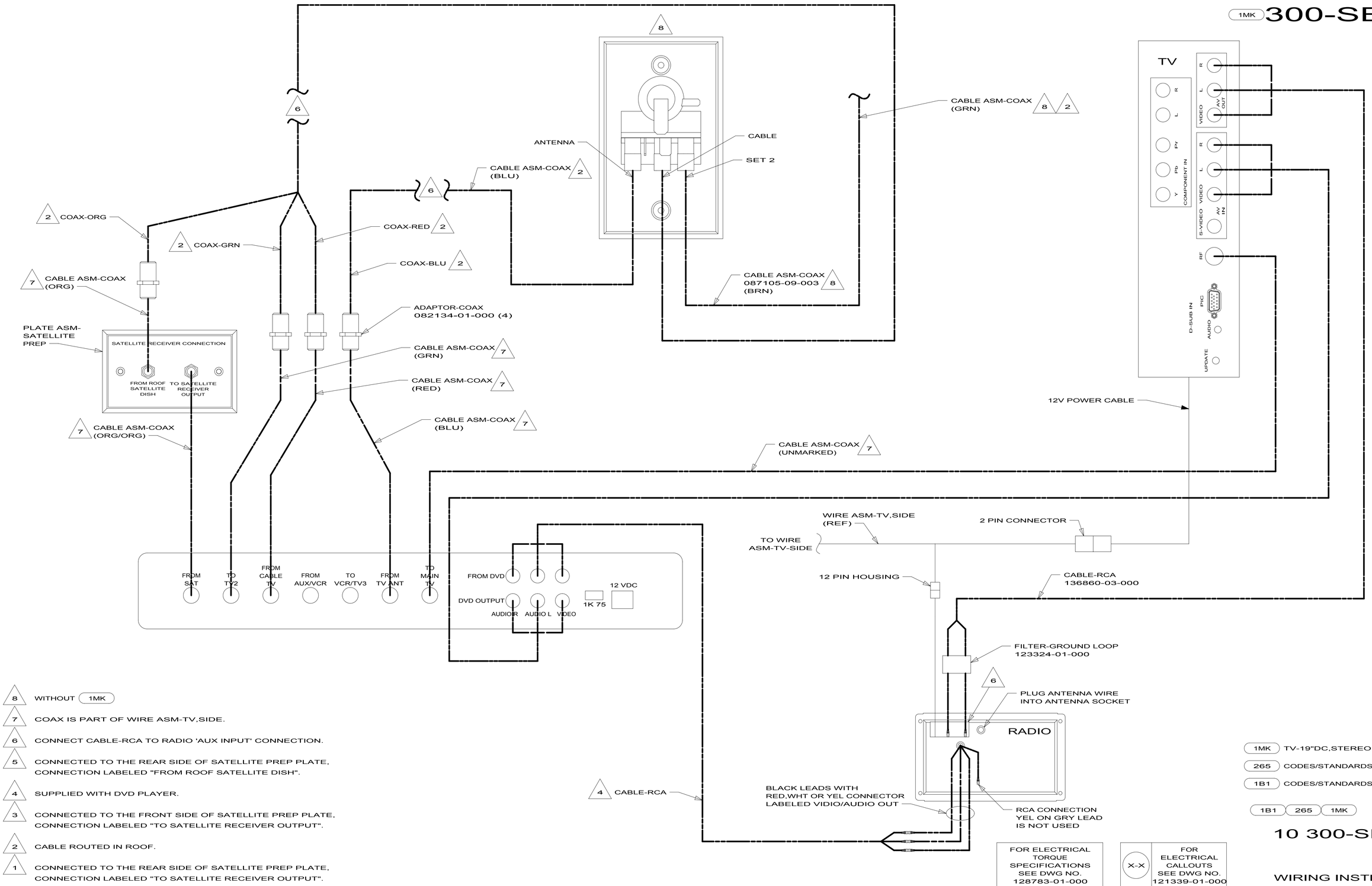

8 WITHOUT 1MK

7 COAX IS PART OF WIRE ASM-TV,SIDE.

6 CONNECT CABLE-RCA TO RADIO 'AUX INPUT' CONNECTION.

5 CONNECTED TO THE REAR SIDE OF SATELLITE PREP PLATE, CONNECTION LABELED "FROM ROOF SATELLITE DISH".

4 SUPPLIED WITH DVD PLAYER.

3 CONNECTED TO THE FRONT SIDE OF SATELLITE PREP PLATE, CONNECTION LABELED "TO SATELLITE RECEIVER OUTPUT".

2 CABLE ROUTED IN ROOF.

1 CONNECTED TO THE REAR SIDE OF SATELLITE PREP PLATE, CONNECTION LABELED "TO SATELLITE RECEIVER OUTPUT".

NOTES:

DETAIL DA

FOR ELECTRICAL TORQUE SPECIFICATIONS SEE DWG NO. 128783-01-000

X-X FOR ELECTRICAL CALLOUTS SEE DWG NO. 121339-01-000

1MK TV-19"DC,STEREO SYS,VDEO SEL

265 CODES/STANDARDS-CSA/CMVSS

1B1 CODES/STANDARDS USA

1B1 265 1MK

10 300-SERIES

WIRING INSTL-TV/DVD

4 170529

2/11/2010

DWG NO 170529

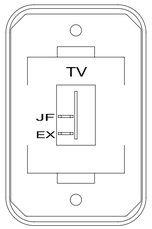

SWITCH-ROCKER
135740-01-CHT
SWITCH-BASE
135741-01-CHT
SWITCH-BEZEL
135742-45-CHT
SCREW
G11-08-08U (2)

DETAIL JA

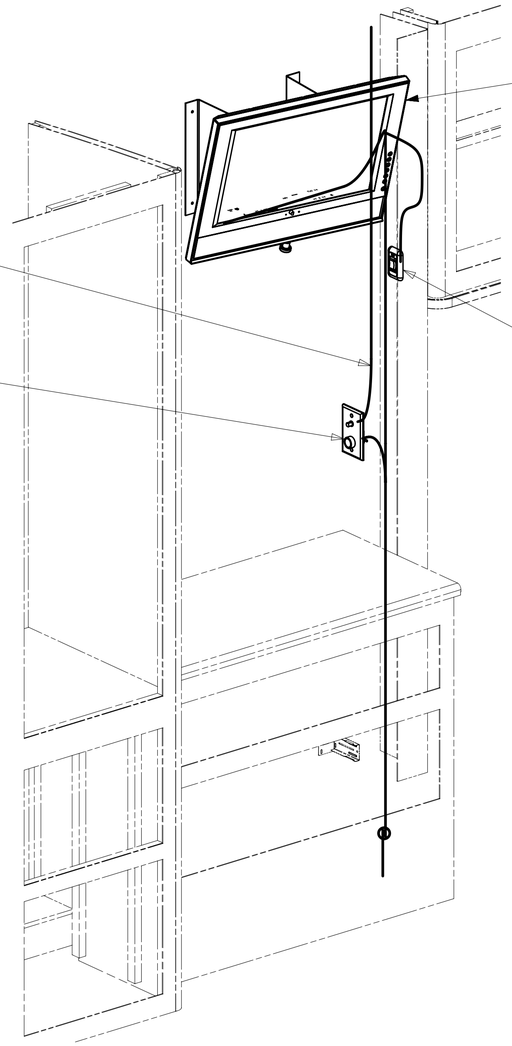

TV-19" LCD (1LK) (2) (3) (4)
170909-01-000
TV-19" DC POWER CABLE
170909-02-000
WASHER
E11-10-00B (4)
CONVOLUTE
41953-06-000 (600MM)
WIRE TIE
8343-01-000 (2)
TV-19" DC POWER
ADAPTOR
170909-03-000
WIRE ASM-POWER
COAX EXT
168887-01-000
(1)

WIRE ASM-TV EXTENSION
165275-01-000

(3) WALLPLATE,TV
COAX (GRN)

SWITCH
DETAIL JA (3)

(1LK) 331C

(1LK) TV-19"DC,COLOR,LCD W/REMOTE
(265) CODES/STANDARDS-CSA/CMVSS
(1B1) CODES/STANDARDS USA

(1B1) (265) (1LK)

NOTES:

(4) USE SCREWS SUPPLIED WITH TV.
(3) SEE WIRING INSTL-BODY,12V FOR ADDITIONAL INFORMATION.
(2) SEE FLOOR PLAN-CABT & APPLIANCE FOR MOUNTING INFORMATION.
(1) WIRE ASSEMBLIES TO BE SUPPLIED LOOSES IN COACH.

FOR ELECTRICAL TORQUE SPECIFICATIONS SEE DWG NO. 128783-01-000

(X-X) FOR ELECTRICAL CALLOUTS SEE DWG NO. 121339-01-000

FIRST USED
10 300-SERIES

DO NOT SCALE DRAWING

TITLE:
WIRING INSTL-TV/DVD

SHEET 6 | PART NO 170529 | REV

164270-01-000

KEY	PART NUMBER	U/M	DESCRIPTION	VENDOR NO.
	164270-01-700	EA	REMOTE	STS2891REM

COPYRIGHT © 2009 WINNEBAGO INDUSTRIES INC.

169151-01-000, 169151-02-000

KEY	PART NUMBER	U/M	DESCRIPTION	VENDOR NO.
	169154-01-700	EA	REMOTE - TV	RRMCGA667WJSA

COPYRIGHT © 2009 WINNEBAGO INDUSTRIES INC.

169536-01-01A

KEY	PART NUMBER	U/M	DESCRIPTION	VENDOR NO.
	169536-01-700	EA	REMOTE - SERVICE PACK	PSVCAWM970

COPYRIGHT © 2009 WINNEBAGO INDUSTRIES INC.

170909-01-000

KEY	PART NUMBER	U/M	DESCRIPTION	VENDOR NO.
	170909-01-700	EA	REMOTE - SERVICE PACK	PSVCJE1909

COPYRIGHT © 2009 WINNEBAGO INDUSTRIES INC.

173514-01-000, 173514-02-000

KEY	PART NUMBER	U/M	DESCRIPTION	VENDOR NO.
	173514-01-700	EA	REMOTE	272041

COPYRIGHT © 2010 WINNEBAGO INDUSTRIES INC.

173556-01-000

KEY	PART NUMBER	U/M	DESCRIPTION	VENDOR NO.
	173556-01-700	EA	REMOTE - SERVICE PACK	PSVCJE3208

COPYRIGHT © 2010 WINNEBAGO INDUSTRIES INC.