DWG NO	SHT
WINDOWS	1
DOORS	2
EXTERIOR DOORS & COMPTS	3
INTERIOR CAB	4
INTERIOR COACH	5
EXTERIOR	6
MISC	7
HOLDING TANK VALVES	8

RELEASE	REV A	DATE	DWG NO 169723
REV	ZONE	REVISION RECORD	DATE	DFTR-ORIG

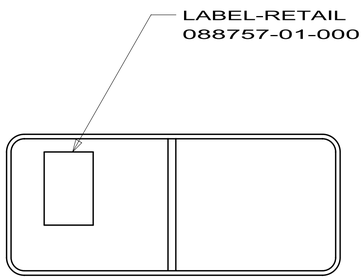

WINDOW BEHIND DRIVER SEAT

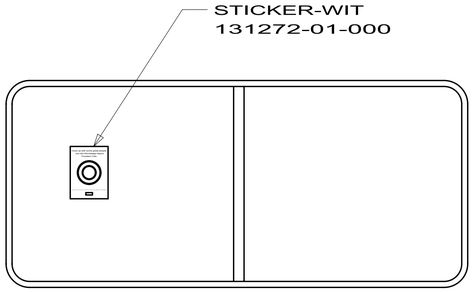

LARGEST WINDOW ON PASSENGER SIDE

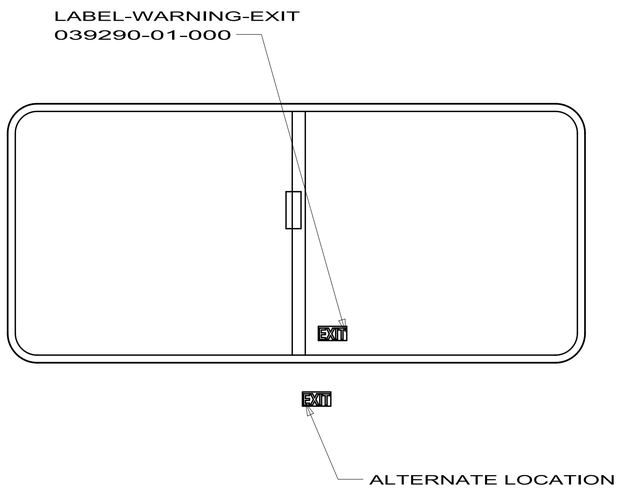

(SLIDER STYLE WINDOW)

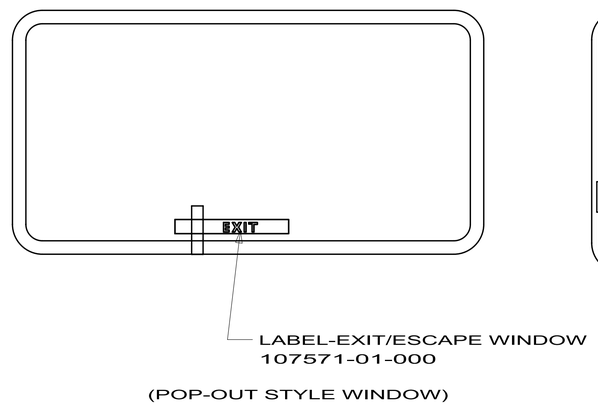

(POP-OUT STYLE WINDOW)

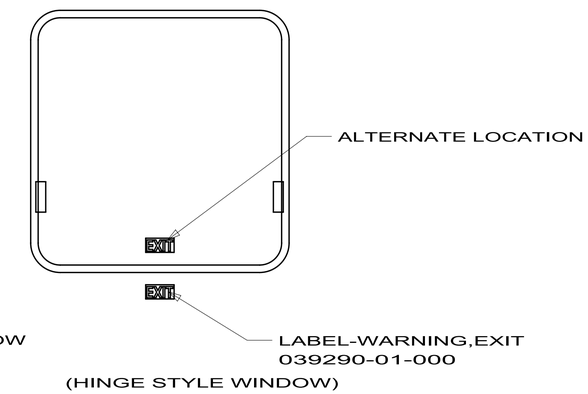

(HINGE STYLE WINDOW)

EXIT WINDOWS

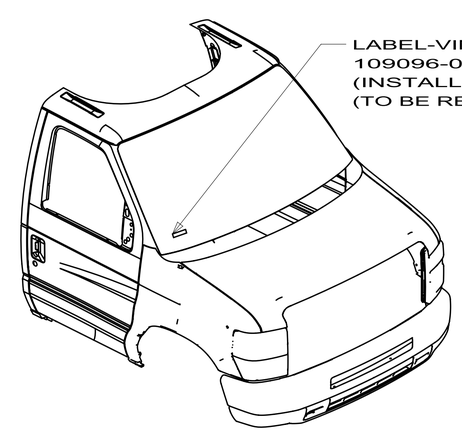

1B1 CODES/STANDARDS/USA

265 CODES/STANDARDS-CSA/CMVSS

27E CODES/STANDARDS/CMVSS

15T AIR SPRINGS REAR

321 GENERATOR PREP KIT

5. FOR SLIDEOUT CONTROL SWITCH LABELS SEE WIRING INSTL-12V

4 ON METAL SIDE OF STEP COVER.

3. WINDOWS ARE SHOWN FROM INTERIOR SIDE OF COACH.

2 USE FOR CALIFORNIA ONLY.

1 USE FOR STATE: OREGON, NEBRASKA, AND WASHINGTON ONLY.

NOTES:

COPYRIGHT 2009
WINNEBAGO
INDUSTRIES, INC.

DFTR	ORIG. DATE
CHKR	ALL DIMENSIONS ARE IN MILLIMETERS
P.E.	
M.E.	FIRST USED
DSNR	10 200-SERIES

UNSPECIFIED TOLERANCES ARE:
WHOLE DIM (X) : 3
ONE-PLACE (X.X) : 1.5
TWO-PLACE (X.XX) : 0.50
ANGLE : 1°

THIRD ANGLE PROJECTION

MATERIAL:

DO NOT SCALE DRAWING

TITLE: LABEL LOCATION INSTL

SHEET 1 OF 8 | PART NO 169723 | REV

REF:

10/22/2009

DWG NO 169723

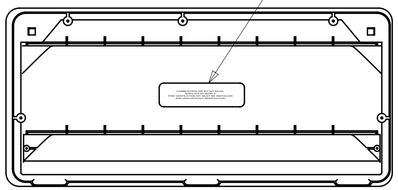

INSIDE VIEW OF REFIGERATOR VENT
(NORCOLD ONLY)

1B1 LABEL-WARNING,REFUELING
124519-01-CHT
27E 265 124519-02-CHT
(LOCATE ON SIDEWALL ABOVE SHROUD)

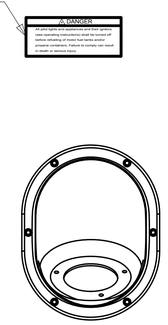

FUEL FILL
(OUTSIDE)

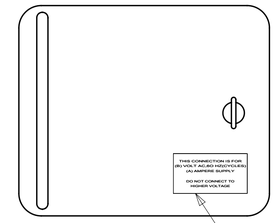

LABEL-ELEC
125306-01-CHT

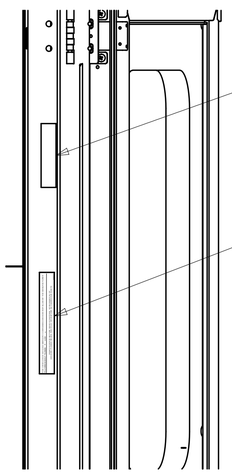

LABEL-VIN
109096-01-000

LABEL-MERCURY
135869-01-CHT

SECTION A-A

1B1 TAG-RVIA APPROVED
006019-01-000

1 STATE INSIGNIA

265 CSA,CRVA
160649-01-CHT

LABEL-AWNING INSTL
099509-01-000

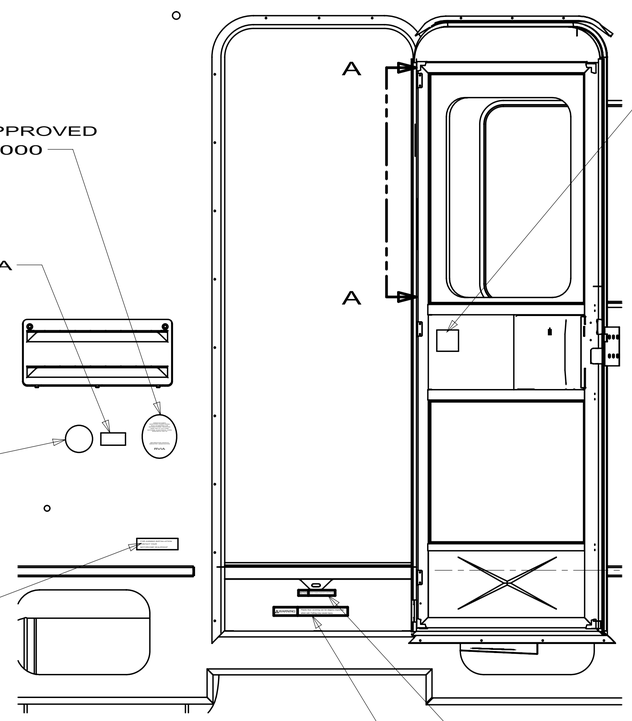

LABLE WARNING
ELECTRIC STEP
(VENDOR SUPPLIED)

LABEL-CAUTION, BATTERY
065748-01-000 4

LABEL-WARNING,FLOOR COVER
110273-01-0000

LABEL-VEHICLE CERTIFICATION
087237-02-000 (US)
087237-05-000 (CAN)

LABEL-OCCUPANT AND CCC
168454-01-CHT (US)

LABEL-OCCUPANT AND CCC
168454-01-CHT (US)

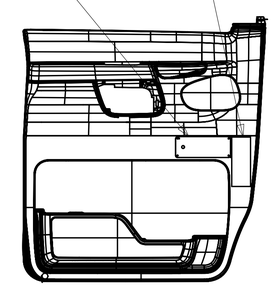

DRIVER DOOR

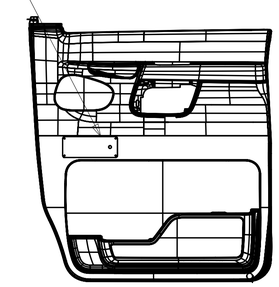

PASSENGER DOOR

FIRST USED	10 200-SERIES
	DO NOT SCALE DRAWING
TITLE:	LABEL LOCATION INSTL
SHEET 2	PART NO 169723 REV

10/22/2009

DWG NO 169723

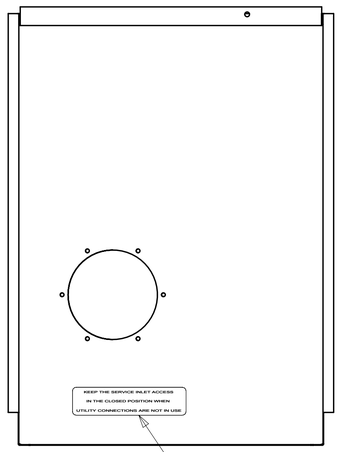

LABEL-SERVICE/UTILITY ACCESS
123562-01-000

LABEL-GENERATOR-PREP
077510-01-000 321

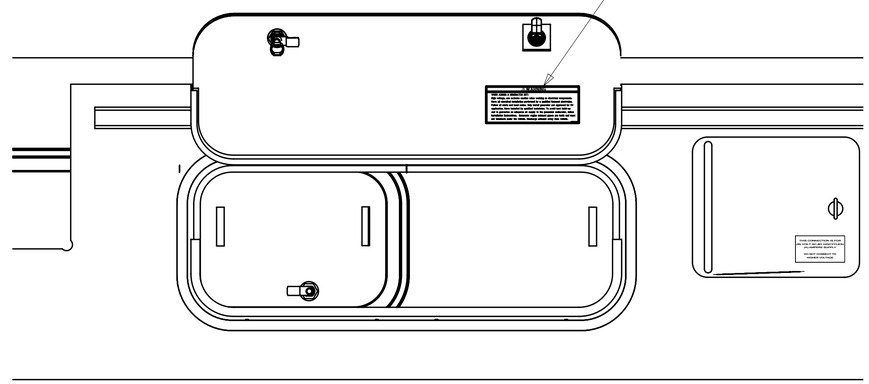

LABEL-LP GAS ONLY
124520-01-CHT (US)
265 LABEL-LP GAS
023769-01-000

LABEL-WARNING,REFUELING
124519-01-CHT
124519-02-CHT 265

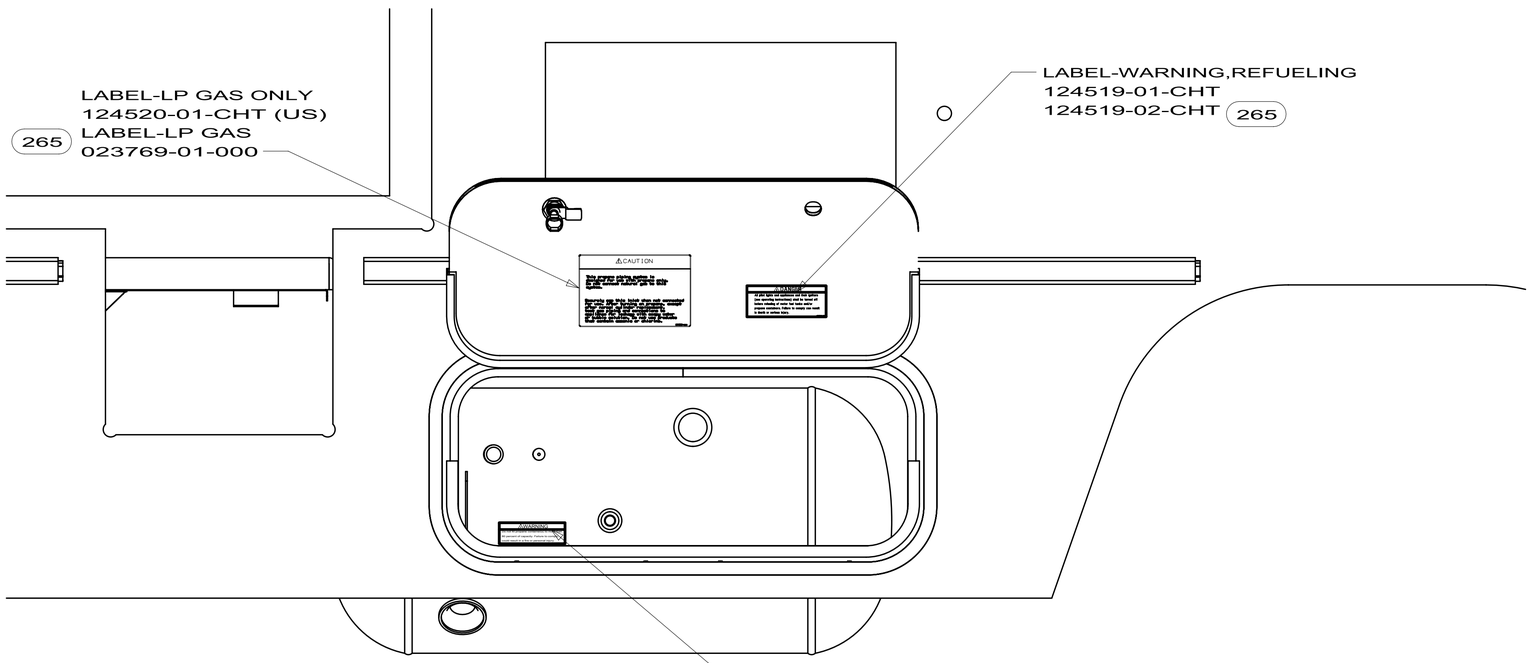

LABEL-LPG 80 % CAPACITY
079965-01-000

FIRST USED	10 200-SERIES
	DO NOT SCALE DRAWING
TITLE:	LABEL LOCATION INSTL
SHEET 3	PART NO 169723 REV

10/22/2009

DWG NO 169723

LABEL-WEIGHT SPEC
117396-03-000 (CAN) (3) 265 27E
117396-04-000 (CAN) (3) 265 27E

LABEL-CERTIFICATION
087237-02-000 (US)
27E 265 087237-05-000 (CAN)

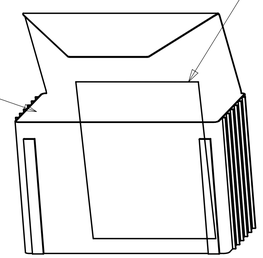

ONE WEIGHT SPEC SHEET TO GO IN OWNERS BAG.
ONE WEIGHT SPEC SHEET TO BE AFFIXED TO THE
INSIDE OF THE WRDROBE OR SIMILAR DOOR.
ONE WEIGHT SHEET OR LABEL 168454-01-CHT TO BE FILED WITH TRAVELER.

LABEL-AIR BAG
126611-01-000
OR CHASSIS SUPPLIED

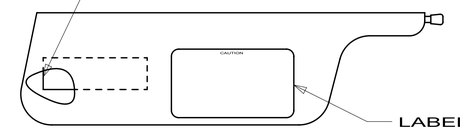

LABEL-CHECKLIST
056259-01-000

LABELS SHALL BE LOCATED ON OPPOSITE SIDE OF
VISOR THAT THE AIR BAG LABEL IS INSTALLED ON.

TYPICAL SEAT AND BELT CONFIGURATIONS

INSTRUMENT CLUSTER
REF

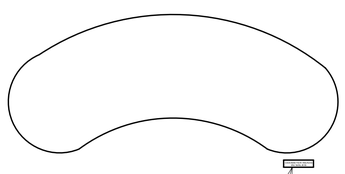

27E 265

LABEL-ODOMETER READ IN MILE
155692-01-CHT (2008 CHASSIS)
NO LABEL (2009 CHASSIS)

(FORD SERVICE TOOL USED TO
ACTIVATE DAYTIME RUNNING
LIGHTS AND CHANGE ODOMETER
TO METRIC)

LABEL-NO OCCUPANCY
134538-01-CHT (US)
134538-02-CHT (CAN)

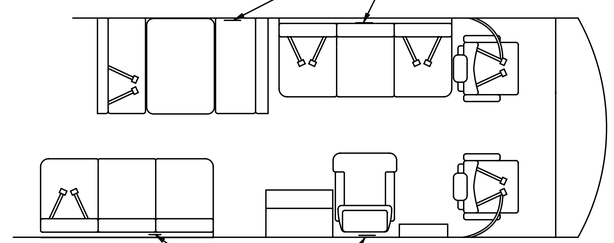

LABEL-NO OCCUPANCY
134538-01-CHT (US)
134538-02-CHT (CAN)

ATTACH LABEL ON OR NEXT TO:
+ANY SINGLE CHAIR WITHOUT BELTS.
+ANY DINETTE SEAT WITHOUT BELTS.
+ANY COUCH WITHOUT BELTS OR ANY SEATING POSITION ON THAT COUCH.

DO NOT ATTACH LABEL IF:
+DINETTE SEAT HAS AT LEAST ONE SET OF BELTS INSTALLED.

FIRST USED	10 200-SERIES
	DO NOT SCALE DRAWING
TITLE:	LABEL LOCATION INSTL
SHEET 4	PART NO 169723 REV

10/22/2009

DWG NO 169723

LABEL NOT TO COVER
SENSOR OPENING

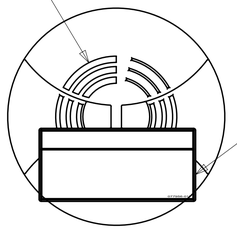

LABEL-WARNING,SMOKE DETECTOR
077956-01-000

SMOKE DETECTOR

C.O. DETECTOR

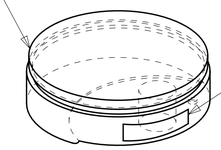

LABEL-TEST ALARM WARNING
(VENDOR SUPPLIED)

41Q

LABEL-AIRBED INSTRUCTIONS
173413-01-CHT

LOCATE BEHIND SOFA ON
SIDEWALL AND LEVEL WITH
TOP EDGE OF SOFA ARM

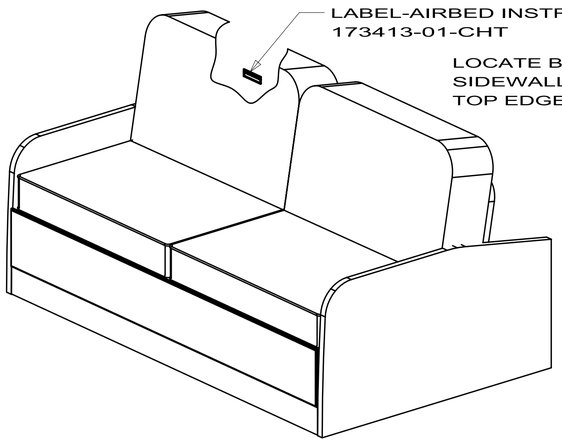

ALTERNATE LOCATION
(ON STAINLESS STL BACKSPLASH)

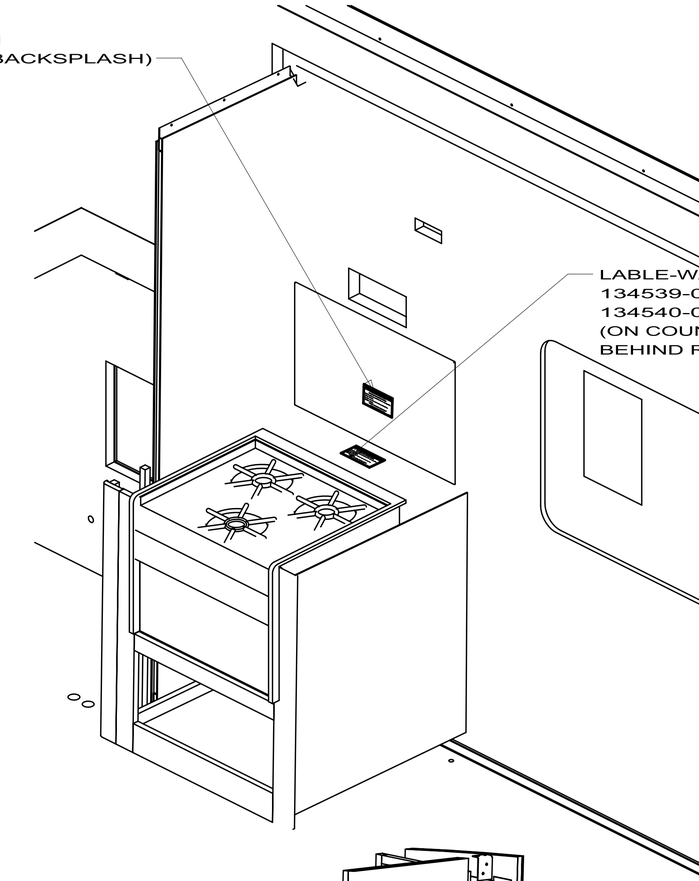

LABLE-WARNING,STOVE VENT
134539-01-CHT 1B1
134540-01-CHT 265
(ON COUNTERTOP
BEHIND RANGE)

LABEL-WARNING
CANCER/TOXICITY 2
099689-01-000

LABEL-LPG ODOR WARNING
073998-01-000

LABEL-FORMALDEHYDE,CARB93120
174199-01-CHT
(LOCATE NEAR 073998-01-000)

LABEL-DATA PLATE
(CSA OR STATE SUPPLIED)

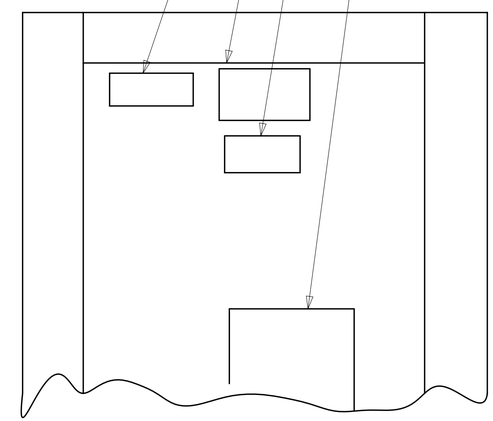

INSIDE GALLEY
CABINET

LABEL-CAUTION,SWINGOUT TV
159837-01-CHT
(LOCATED ON SIDEWALL)

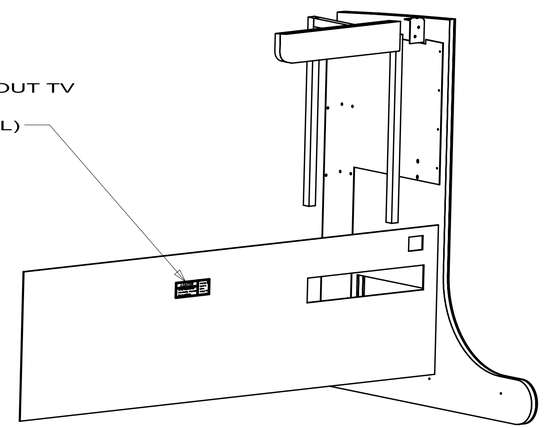

FRONT ENTERTAINMENT CENTER

LABEL-CURTAIN,SECUREMENT
143911-02-CHT
155196-01-CHT 265
(LOCATE ON CABINET ADJACENT
TO STOVE JUST ABOVE COUNTERTOP)

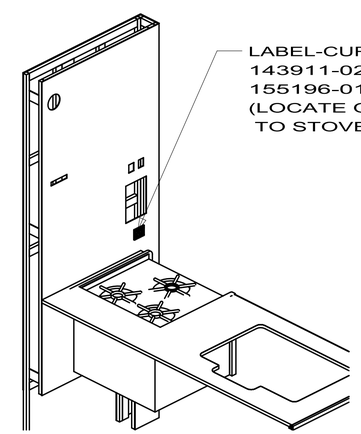

CURTAIN SECUREMENT ADJACENT TO STOVE

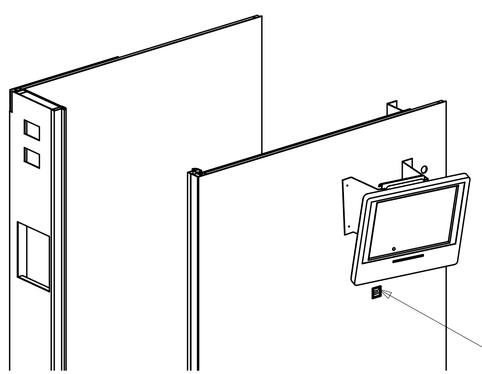

LABEL-RELEASE,TV
159837-02-CHT
(BELOW TV ON CABINET WALL)

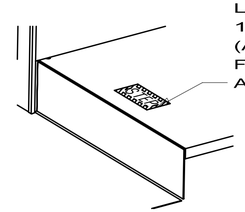

LABEL-STEP
170701-01-CHT
(APPLY TO PROTECTIVE
FLOOR COVERING
AT BEDROOM STEP)

229T, 231C, 231N

265 CODES/STANDARDS-CSA

FIRST USED	10 200-SERIES
	DO NOT SCALE DRAWING
TITLE:	LABEL LOCATION INSTL
SHEET 5	PART NO 169723 REV

10/22/2009

DWG NO 169723

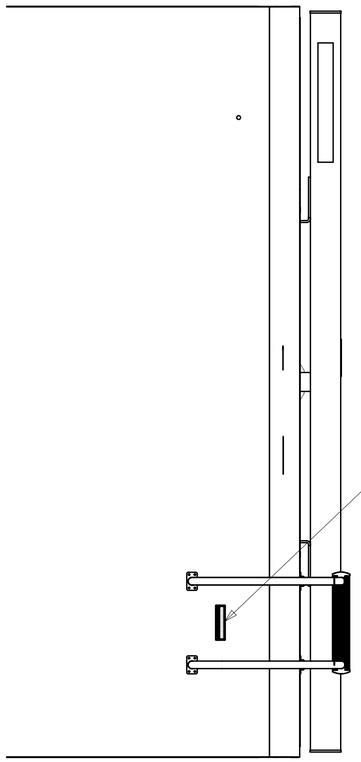

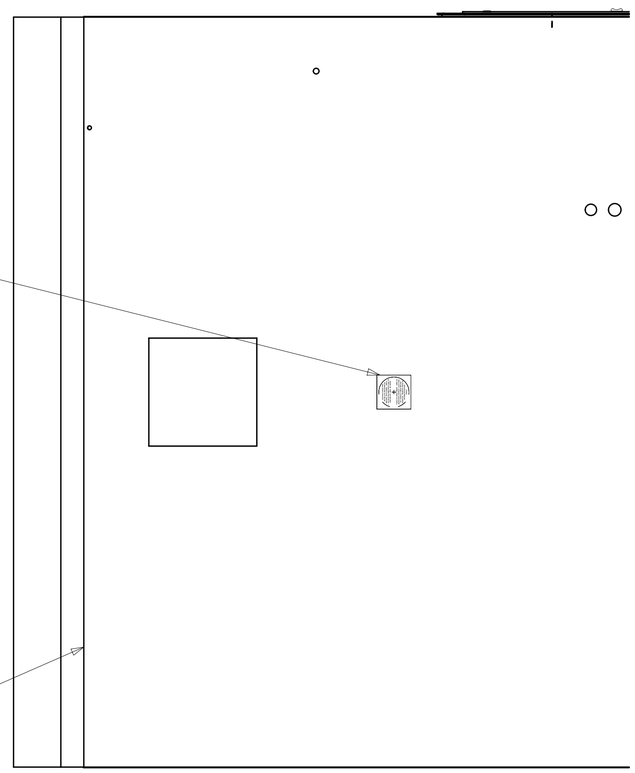

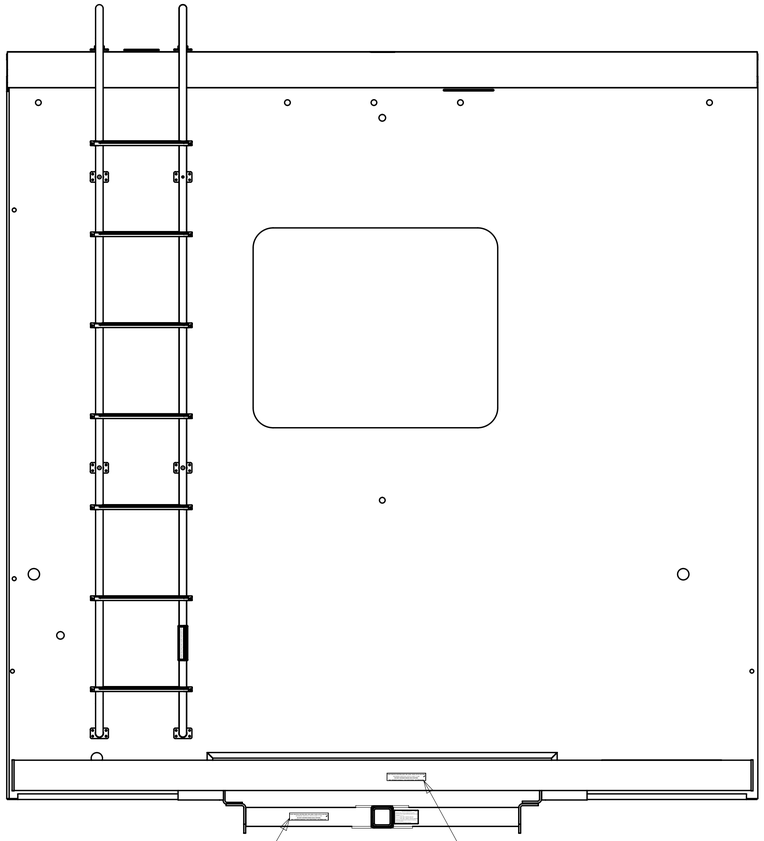

FIRST USED	10 200-SERIES
	DO NOT SCALE DRAWING
TITLE:	LABEL LOCATION INSTL
SHEET 6	PART NO 169723 REV

10/22/2009

DWG NO 169723

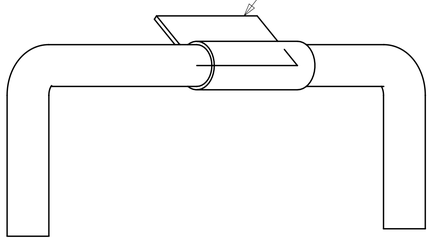

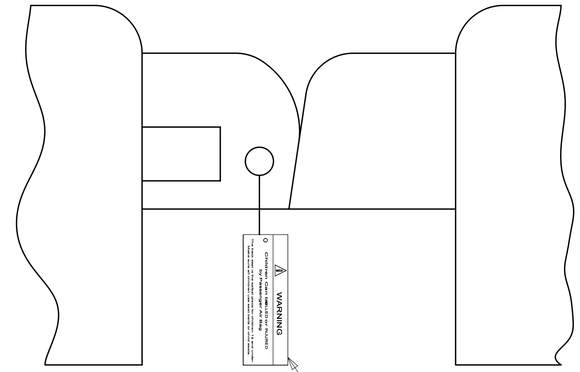

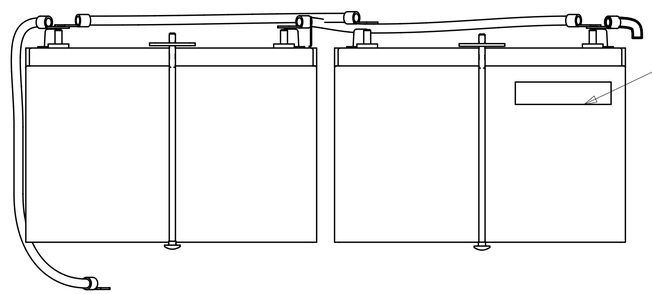

FIRST USED	10 200-SERIES
	DO NOT SCALE DRAWING
TITLE:	LABEL LOCATION INSTL
SHEET 7	PART NO 169723 REV

10/22/2009

DWG NO 169723

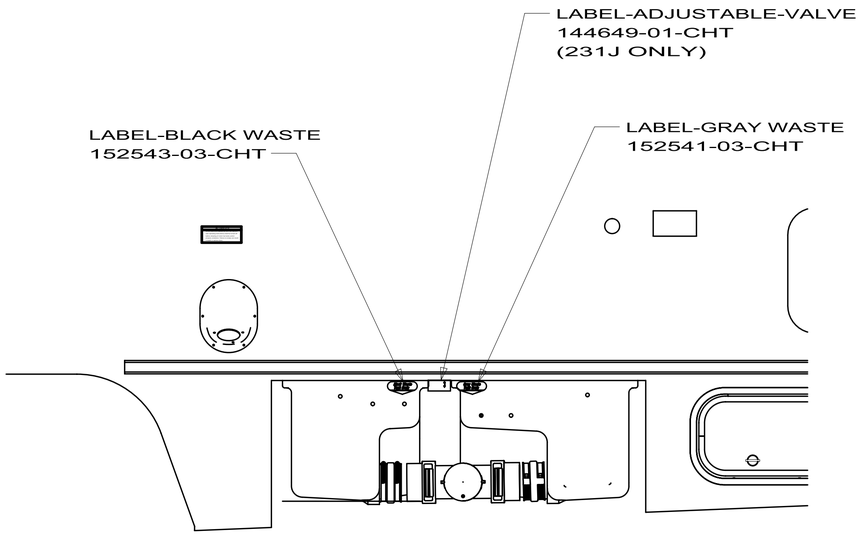

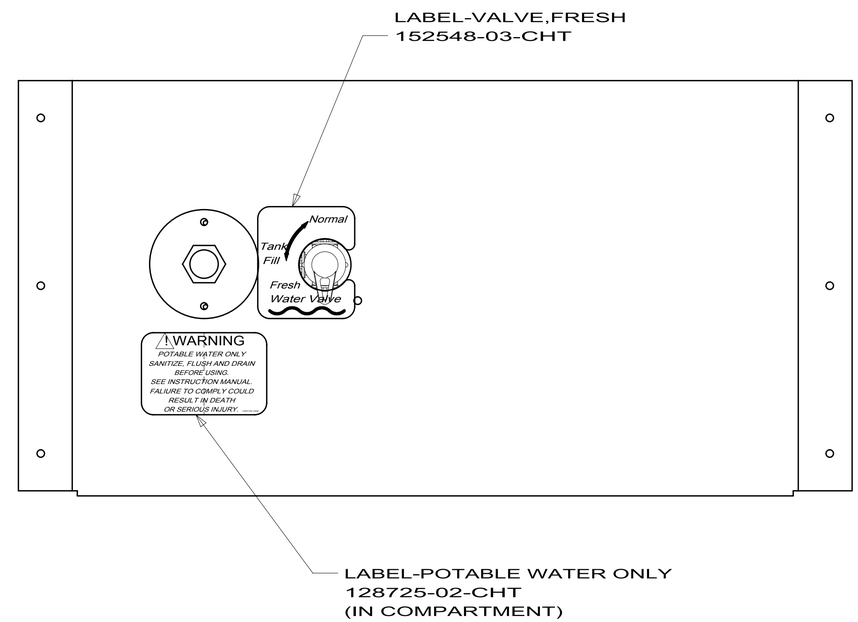

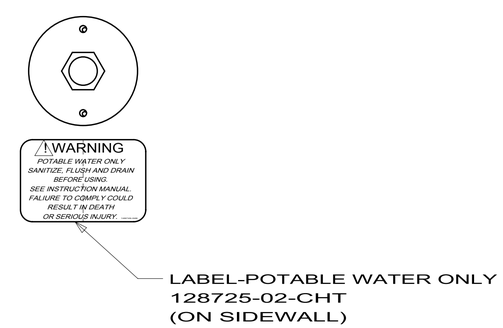

FIRST USED	10 200-SERIES
	DO NOT SCALE DRAWING
TITLE:	LABEL LOCATION INSTL
SHEET 8	PART NO 169723 REV

10/22/2009