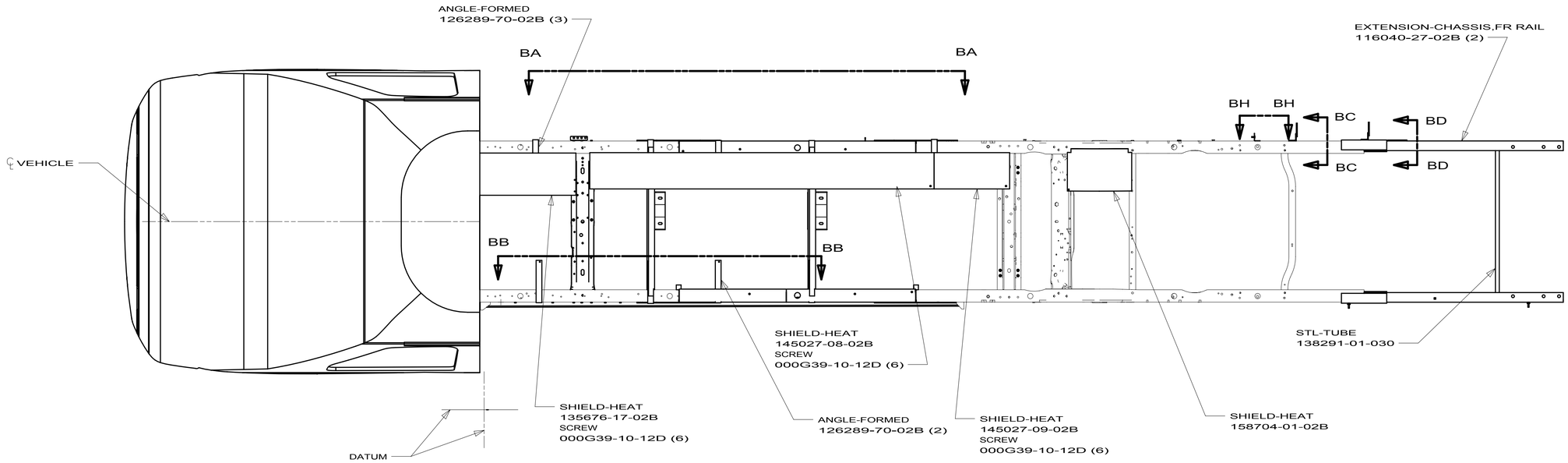

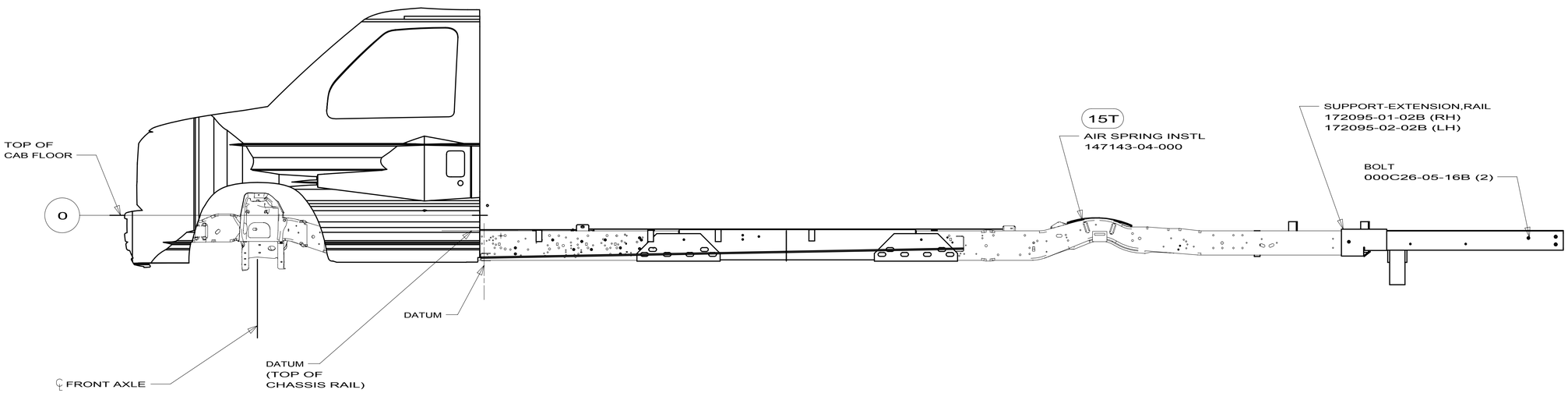

DETAIL AA
RAIL ASM
172910-11-02B

PART NO	SHEET
172910-14	5
172910-13	4
172910-12	3
172910-11	1

NOTES:

5. LEFT CHASSIS RAIL TOOLING HOLE IS USED FOR FIXTURING ASSEMBLY.

4. WELD PER ES0063, UNLESS OTHERWISE SPECIFIED.

3. SEAL ALL JOINTS OF COMPARTMENTS AND CLOSEOUT PANELS WITH SEALANT 053766-01-000.

2. CLEAN AND E-COAT ALL PIECE PARTS PRIOR TO ASSEMBLY.

1. SPRAY ALL WELDS WITH UNDERCOAT 100053-01-000 OR 100053-03-000.

10. CUT TUBE OUT AFTER WELDMENT.

9. DO NOT WELD PAST TANGENT POINT INTO RADIUS OR FLANGE ON FRAME RAILS.

8. SEAL VOID WITH SEALANT 053766-01-000.

7. WELD PLATE ASM 136995-03-02B AFTER SLIDEOUT ARMS ARE LOCATED.

6. REMOVE TWO REAR SCREWS ON RIGHT SEAT BELT MOUNT.

10 231C

15T AIR SPRINGS REAR

SEE CHART
FOR COLOR VARIATIONS
OF THIS PART

FRAME ASM-CHASSIS

1 8 172910

4/16/2010

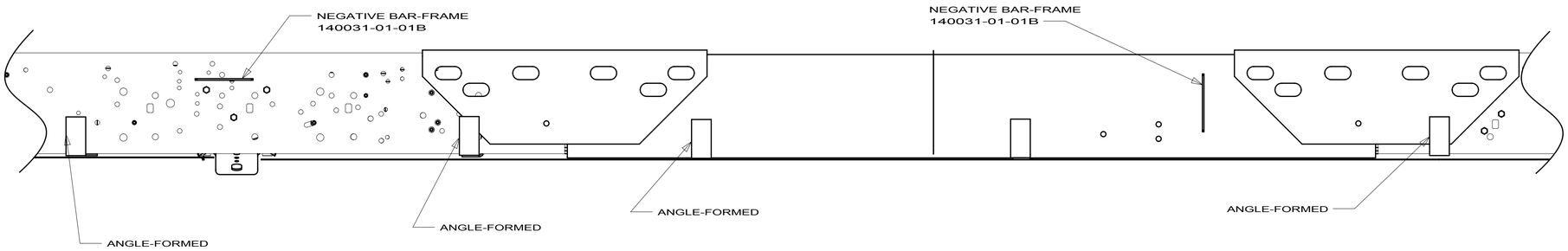

SECTION BA-BA

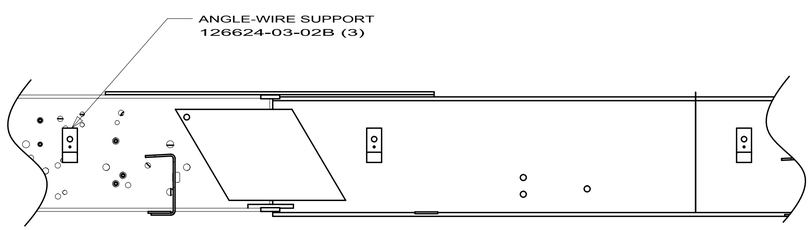

SECTION BB-BB

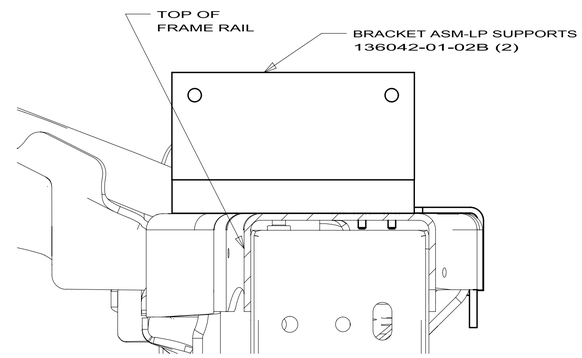

SECTION BC-BC

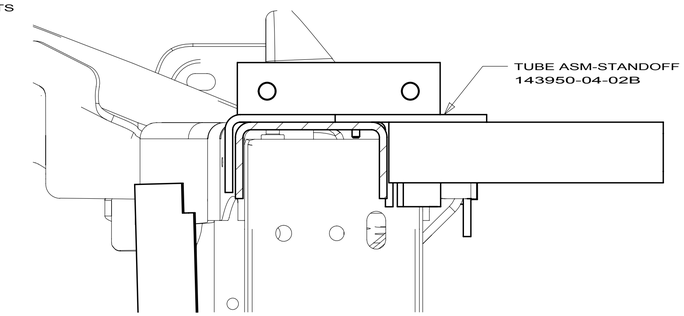

SECTION BD-BD

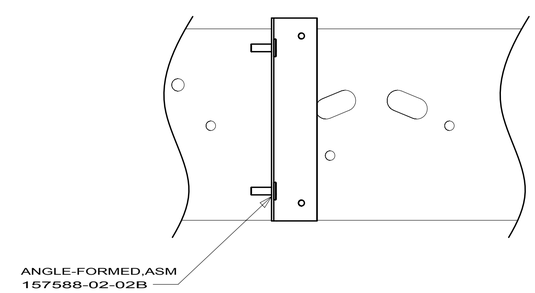

SECTION BH-BH

10 231C

FRAME ASM-CHASSIS

2 172910

4/16/2010

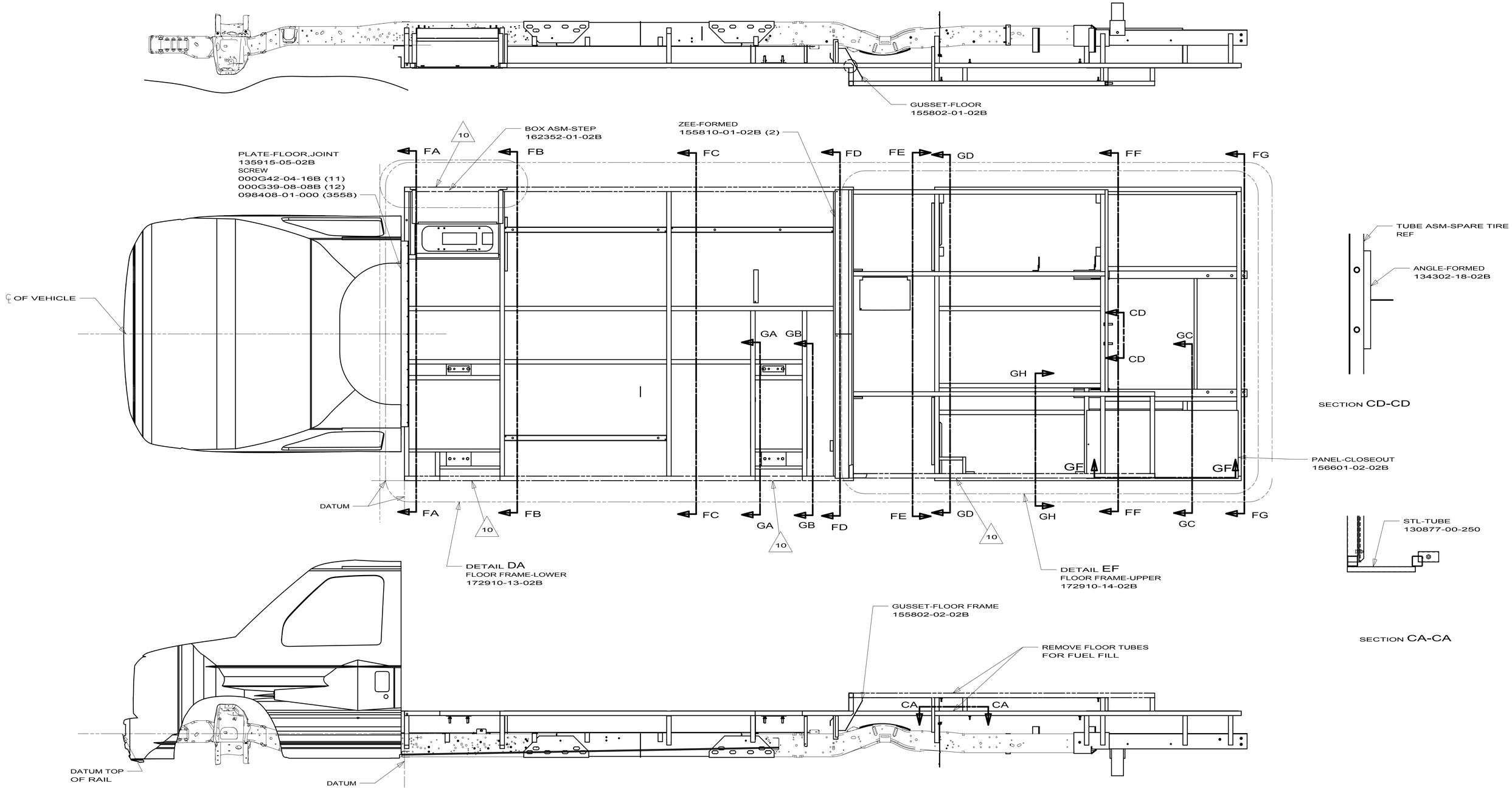

FLOOR FRAME ASM
172910-12-02B

10 231C

FRAME ASM-CHASSIS

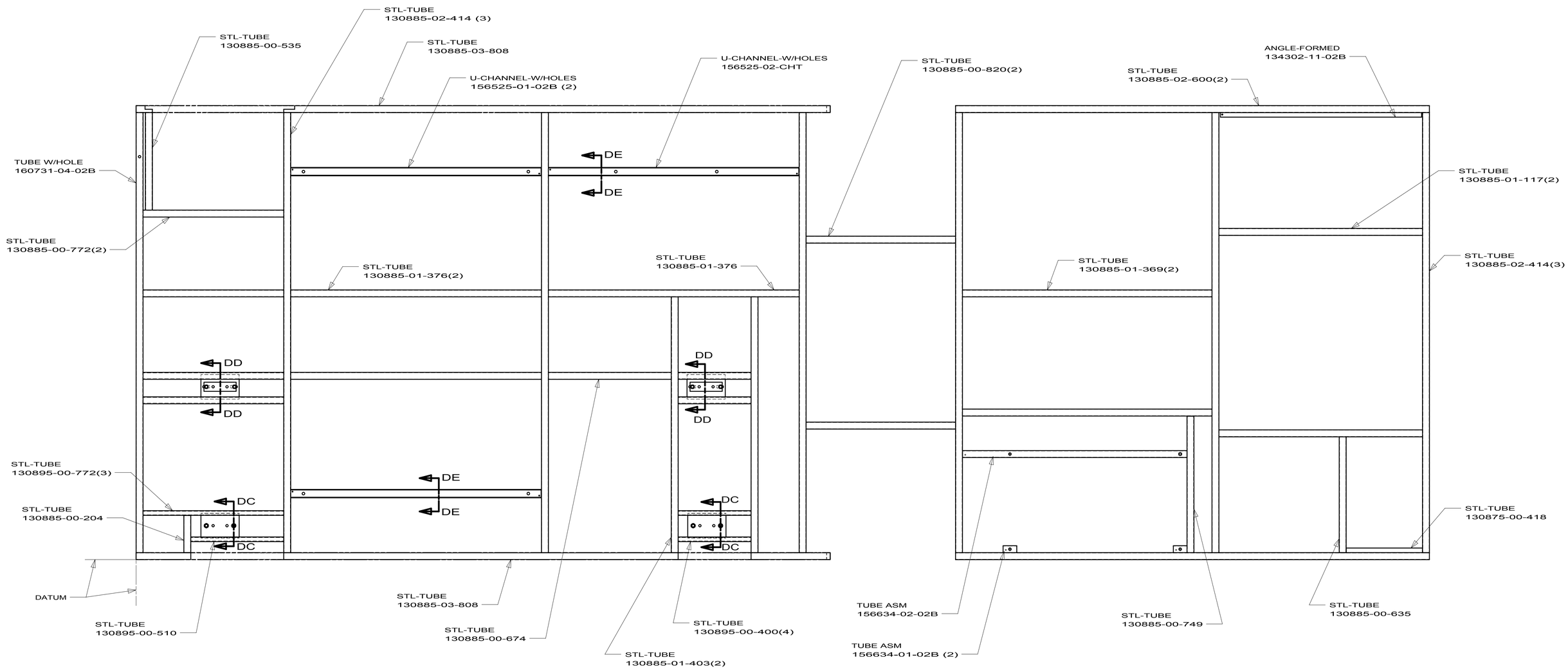

DETAIL DA
FLOOR FRAME-LOWER
172910-13-02B

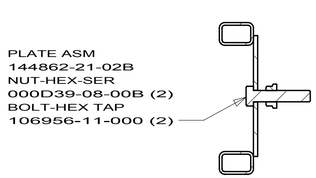

SECTION DC-DC
2 PLCS

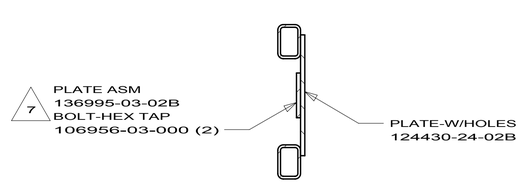

SECTION DD-DD
2 PLCS

10 231C

FRAME ASM-CHASSIS

4 172910

4/16/2010

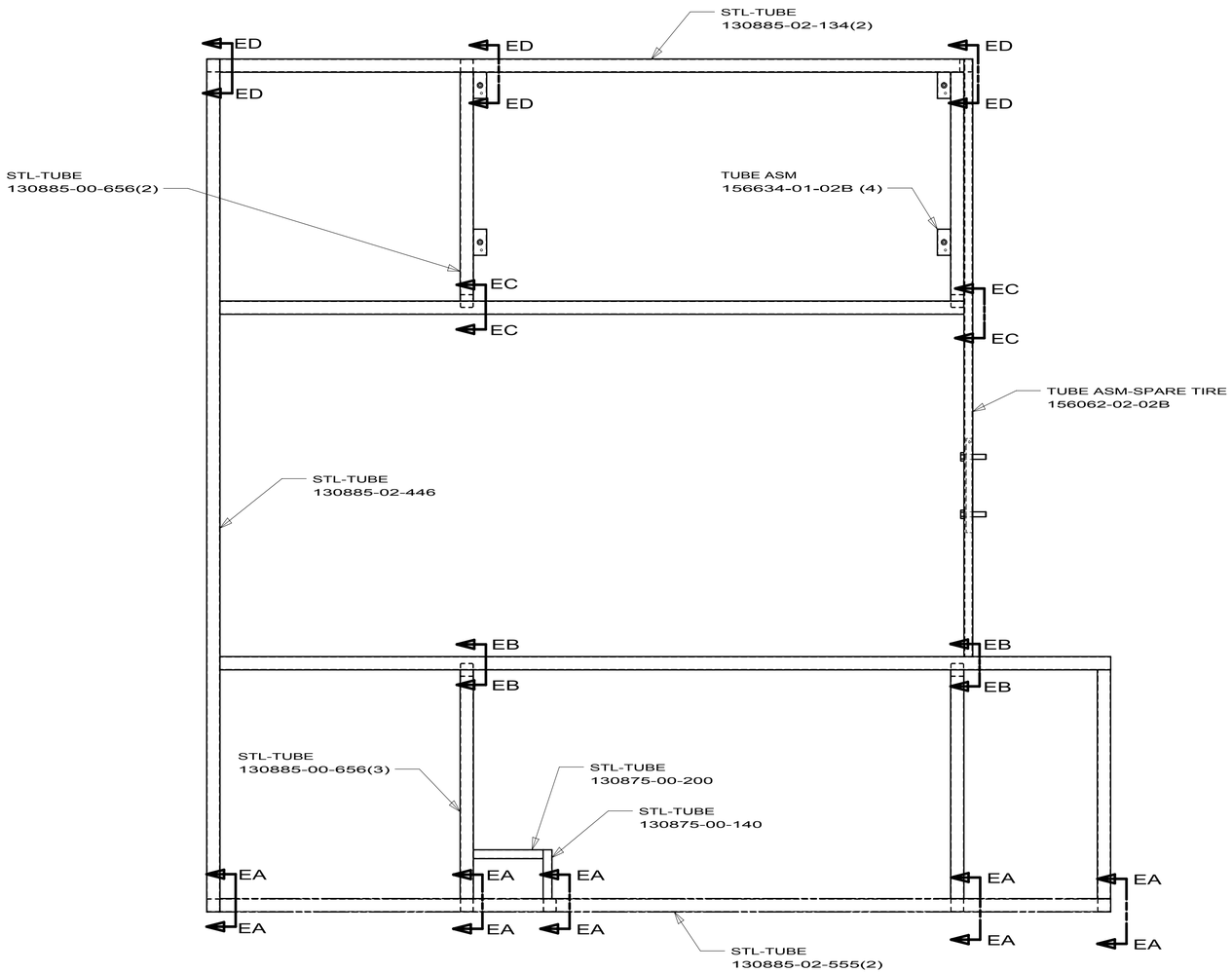

DETAIL EF
FLOOR FRAME-UPPER
172910-14-02B

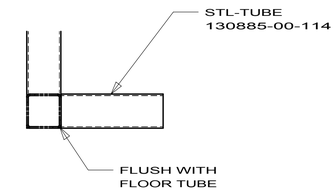

SECTION EA-EA
5 PLCS

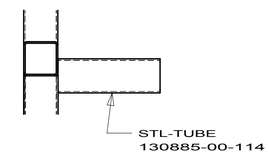

SECTION EB-EB
2 PLCS

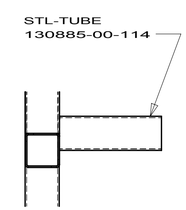

SECTION EC-EC
2 PLCS

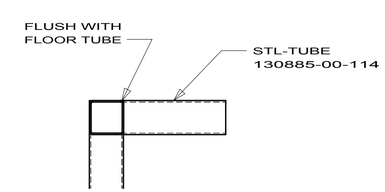

SECTION ED-ED
3 PLCS

10 231C

FRAME ASM-CHASSIS

5 172910

4/16/2010

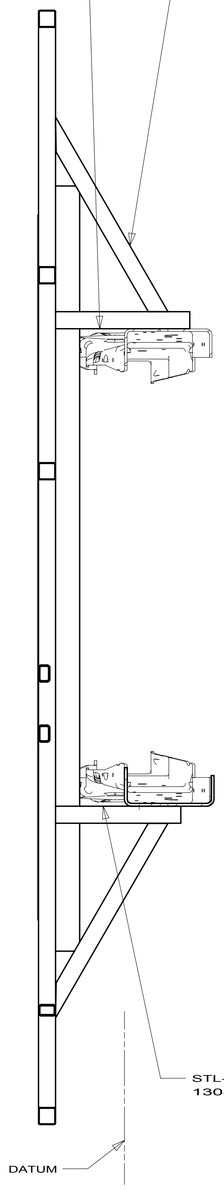

SECTION FA-FA

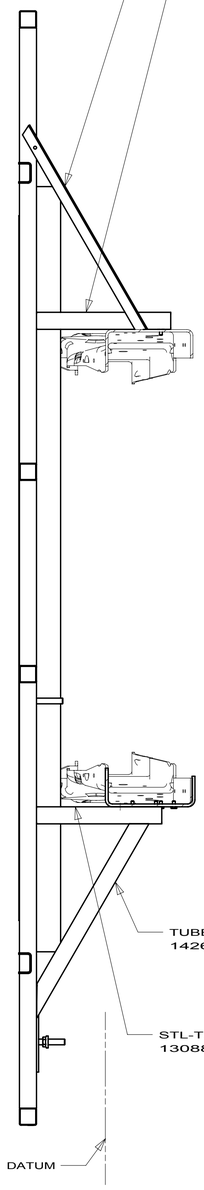

SECTION FB-FB

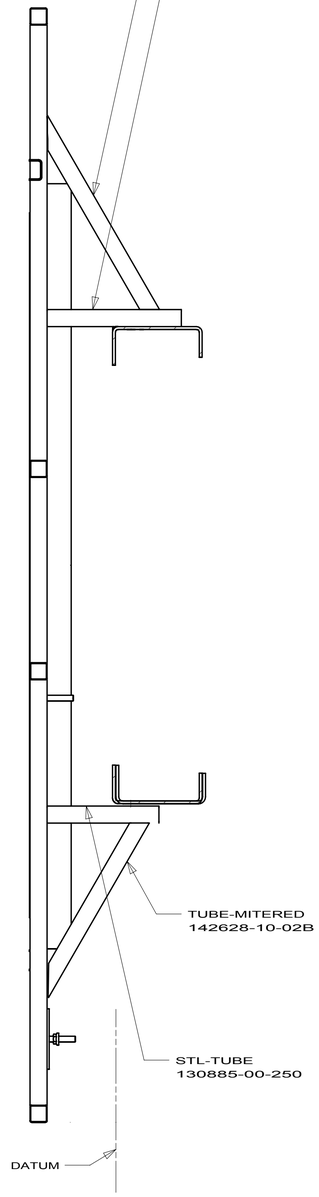

SECTION FC-FC

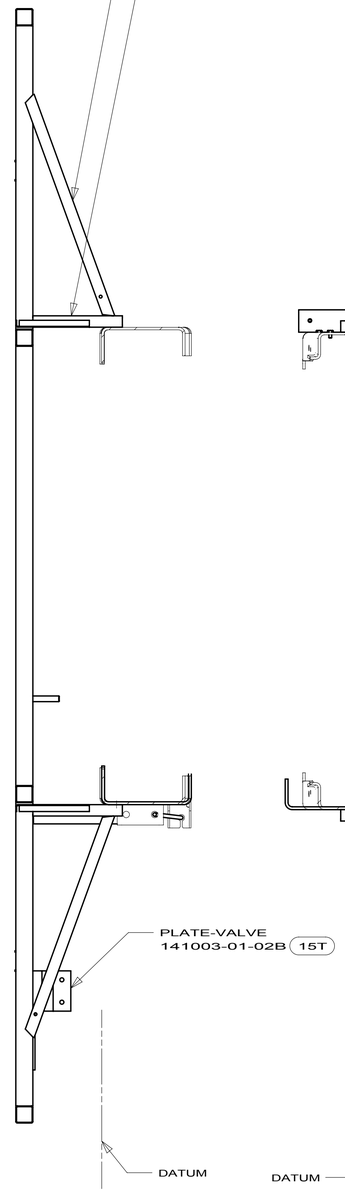

SECTION FD-FD

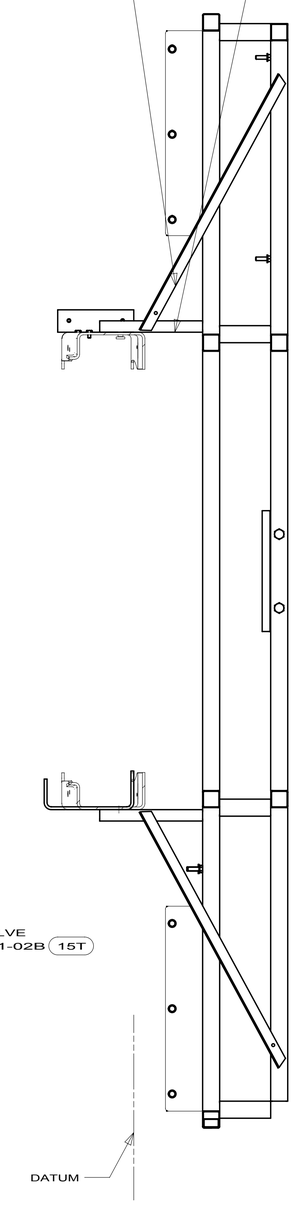

SECTION FE-FE

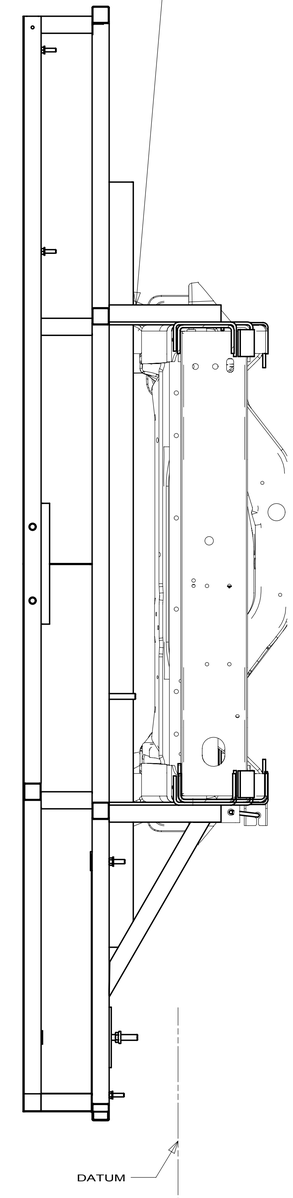

SECTION FF-FF

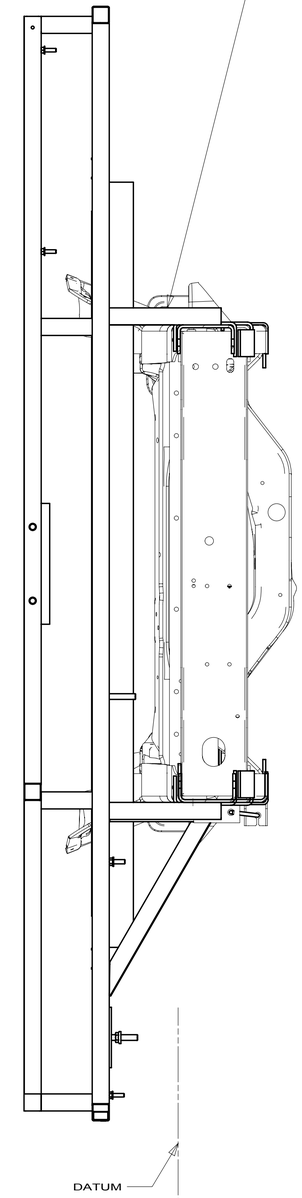

SECTION FG-FG

10 231C

FRAME ASM-CHASSIS

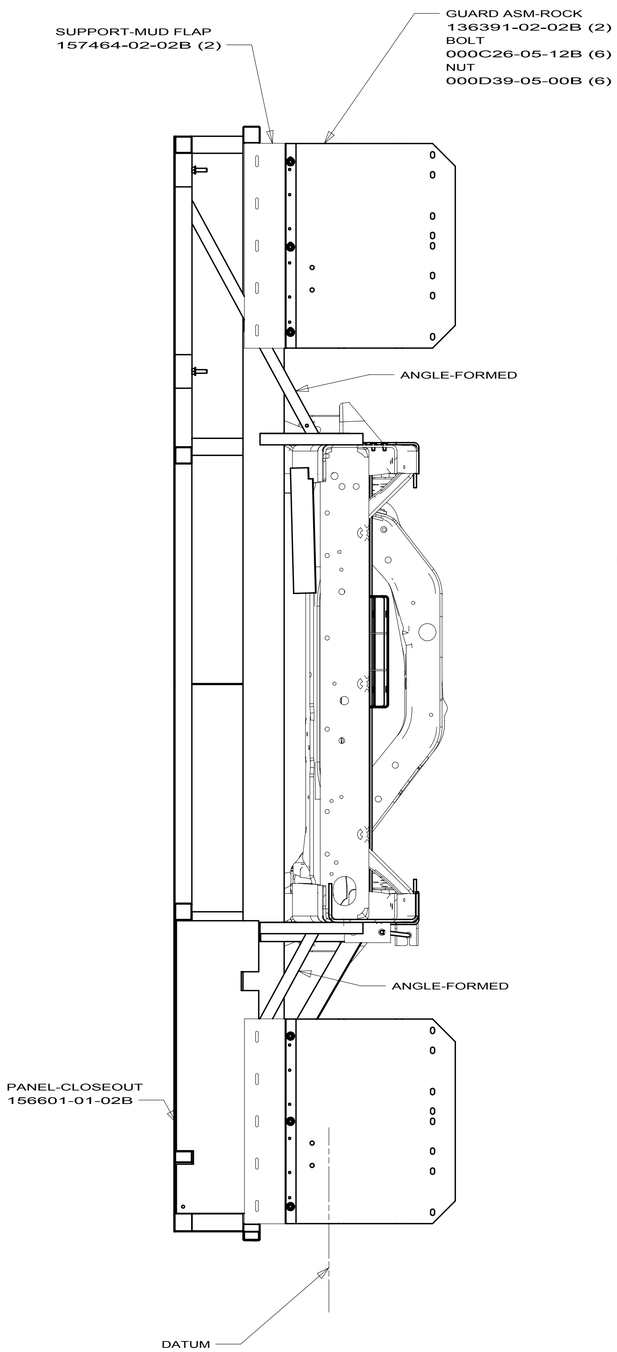

SECTION GD-GD

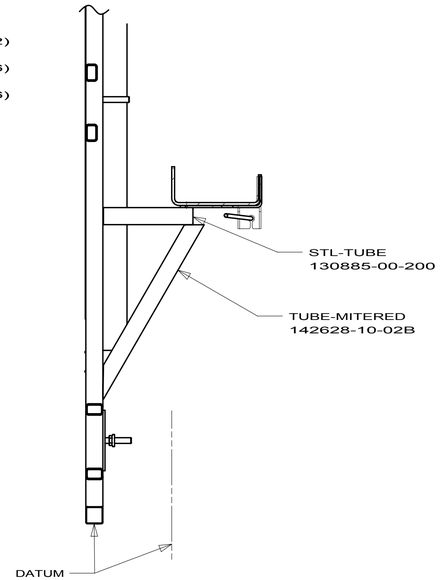

SECTION GA-GA

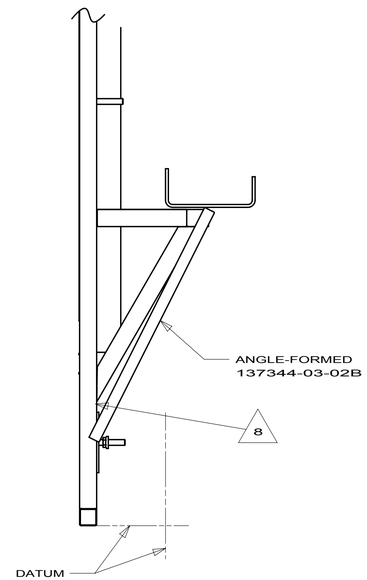

SECTION GB-GB

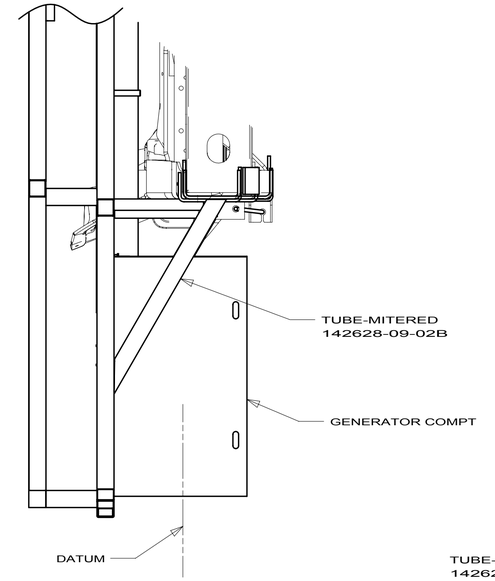

SECTION GC-GC

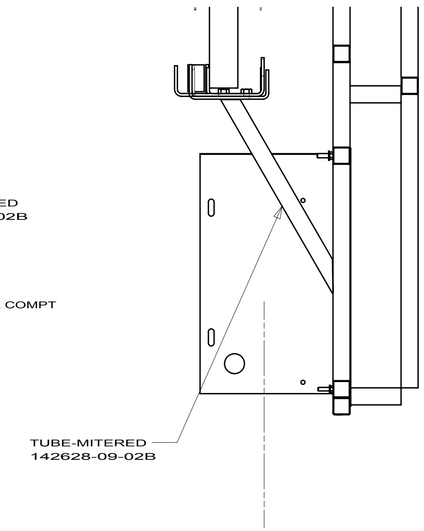

SECTION GH-GH

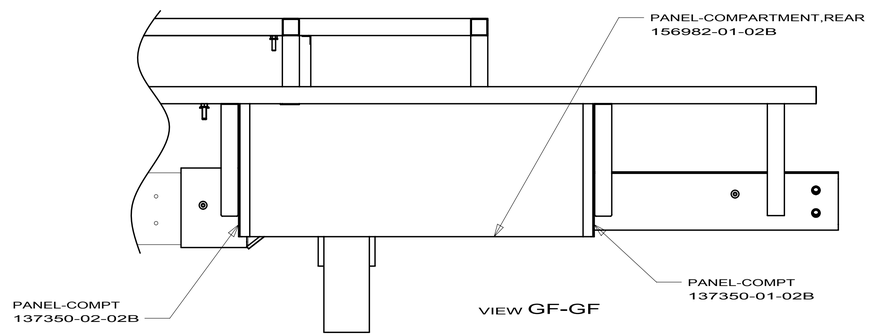

VIEW GF-GF

10 231C

FRAME ASM-CHASSIS

7 172910

4/16/2010

DWG NO	CHASSIS	MODEL	PIPE EXHAUST-GAS	PIPE EXHAUST-DIESEL	CLAMP (QTY)
143863-01	FORD 158" TO 188"	NOT USED	111478-01-000	---	94918-06-000 (1)
143863-02	FORD 158" TO 190"	229T/329B	111478-02-000	---	94918-06-000 (1)
143863-03	FORD 158" TO 205"	NOT USED	111478-03-000	---	94918-06-000 (1)
143863-04	FORD 158" TO 220"	231C/231J 331C	111478-04-000	---	94918-06-000 (1)
143863-05	FORD 158" TO 216"	NOT USED	111478-05-000	---	94918-06-000 (1)
143863-06	FORD 158" TO 188"	NOT USED	---	98762-13-000	94918-02-000 (2)
143863-07	FORD 158" TO 190"	NOT USED	---	98762-14-000	94918-02-000 (2)
143863-08	FORD 158" TO 205"	NOT USED	---	98762-15-000	94918-02-000 (2)
143863-09	FORD 158" TO 220"	NOT USED	---	98762-25-000	94918-02-000 (2)
---	---	---	---	---	---
143863-11	FORD 158" TO 215"	231N	111478-06-000	---	94918-06-000 (1)
143863-12	FORD 158" TO 182"	NOT USED	111478-07-000	---	94918-06-000 (1)
143863-13	FORD 158" TO 168"	NOT USED	111478-08-000	---	94918-06-000 (1)
143863-14	FORD 158" TO 210"	NOT USED	111478-11-000	---	94918-06-000 (1)

RELEASE	REV A	DATE	DWG NO 143863
REV	ZONE	REVISION RECORD	DATE	DFTR-ORIG

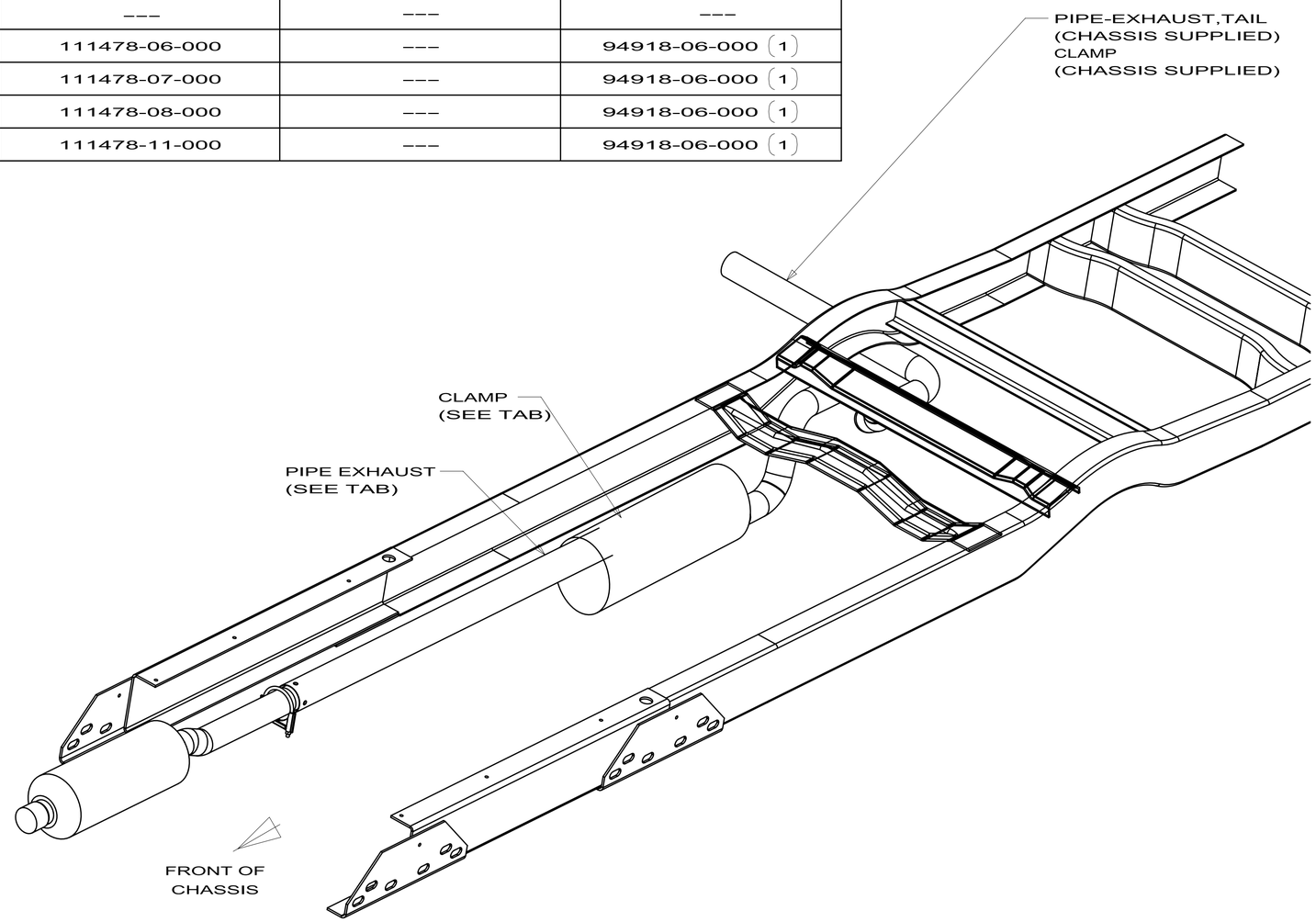

NOTES:

COPYRIGHT 2009
WINNEBAGO
INDUSTRIES, INC.

DFTR	ORIG. DATE
CHKR	ALL DIMENSIONS ARE IN MILLIMETERS
P.E.	
M.E.	FIRST USED
DSNR	92 FORD E350

UNSPECIFIED TOLERANCES ARE:
WHOLE DIM (X) : 3.0
ONE-PLACE (X.X) : 1.5
TWO-PLACE (X.XX) : 0.50
ANGLE : 1°

MATERIAL:

THIRD ANGLE PROJECTION

DO NOT SCALE DRAWING

TITLE: EXHAUST SYSTEM-INSTL

SHEET 1 OF 1 | PART NO 143863 | REV

REF: 1

10/22/2009

DWG NO 171834

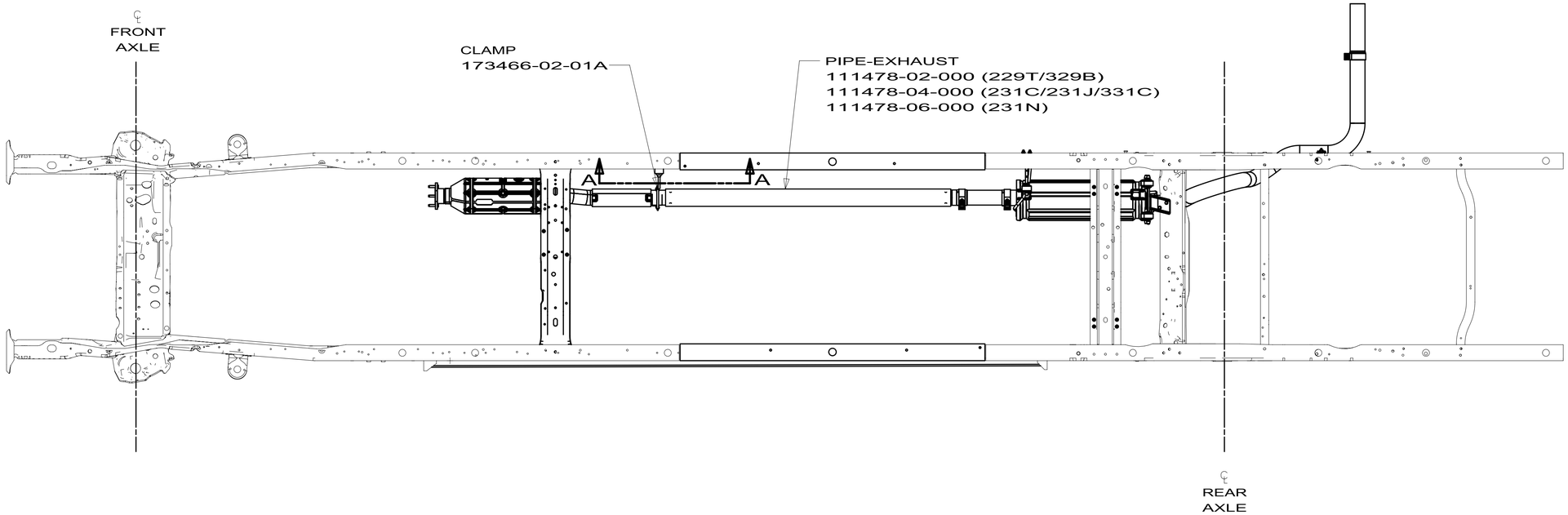

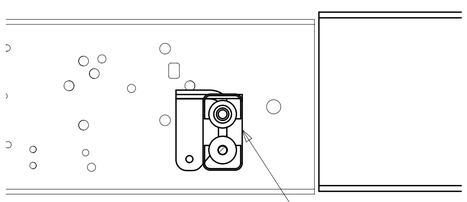

SECTION A-A

HANGER ASM-EXHAUST FORD
143811-01-000
HANGER ASM-TAILPIPE,FRONT
122392-21-02b
(USE ON 190" AND ABOVE WHEELBASES)
CLAMP-EXHAUST 3.00 HVY DUTY
094918-06-000

229T/329B
171834-05

231N
171834-08

231C/231J/331C
171834-09

STRETCHED CHASSIS
EXHAUST BEHIND REAR AXLE

FIRST USED	09 FD E450
DO NOT SCALE DRAWING	
TITLE:	EXHAUST SYSTEM INSTL
SHEET 1	PART NO 171834 REV

1/16/2010

RELEASE	REV A	DATE	DWG NO 156835
REV	ZONE	REVISION RECORD	DATE / DFTR-ORIG

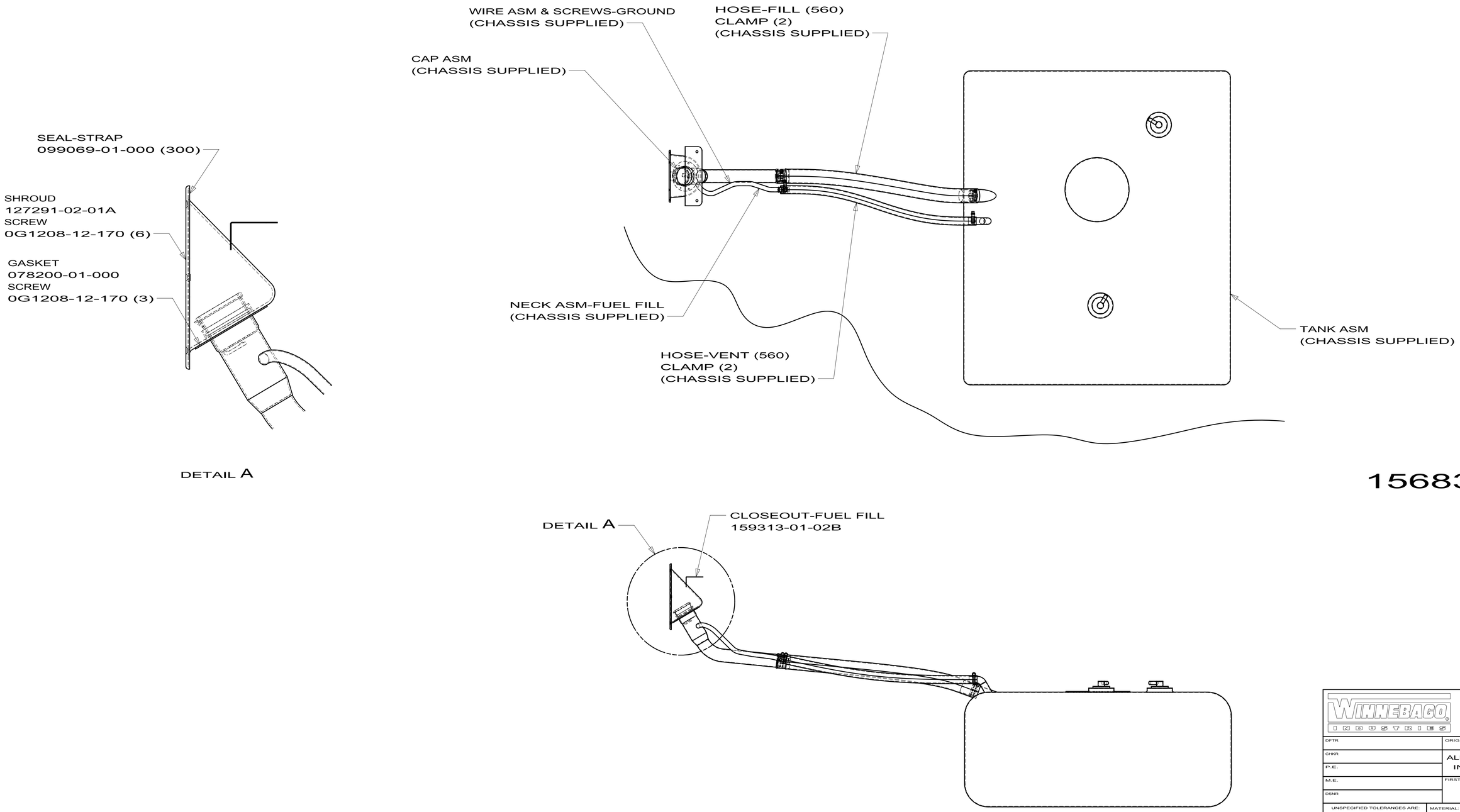

229T
231C
231N
156835-01

NOTES:

COPYRIGHT 2010
WINNEBAGO
INDUSTRIES, INC.

DFTR	ORIG. DATE
CHKR	ALL DIMENSIONS ARE IN MILLIMETERS
P.E.	
M.E.	FIRST USED
DSNR	07 231C

UNSPECIFIED TOLERANCES ARE:
WHOLE DIM (X) : 3
ONE-PLACE (X.X) :
TWO-PLACE (X.XX) :
ANGLE :

THIRD ANGLE PROJECTION

MATERIAL:

DO NOT SCALE DRAWING

TITLE: FUEL FILL INSTL

SHEET 1 OF 5 | PART NO 156835 | REV

REF: 1

1/16/2010

DWG NO 154290

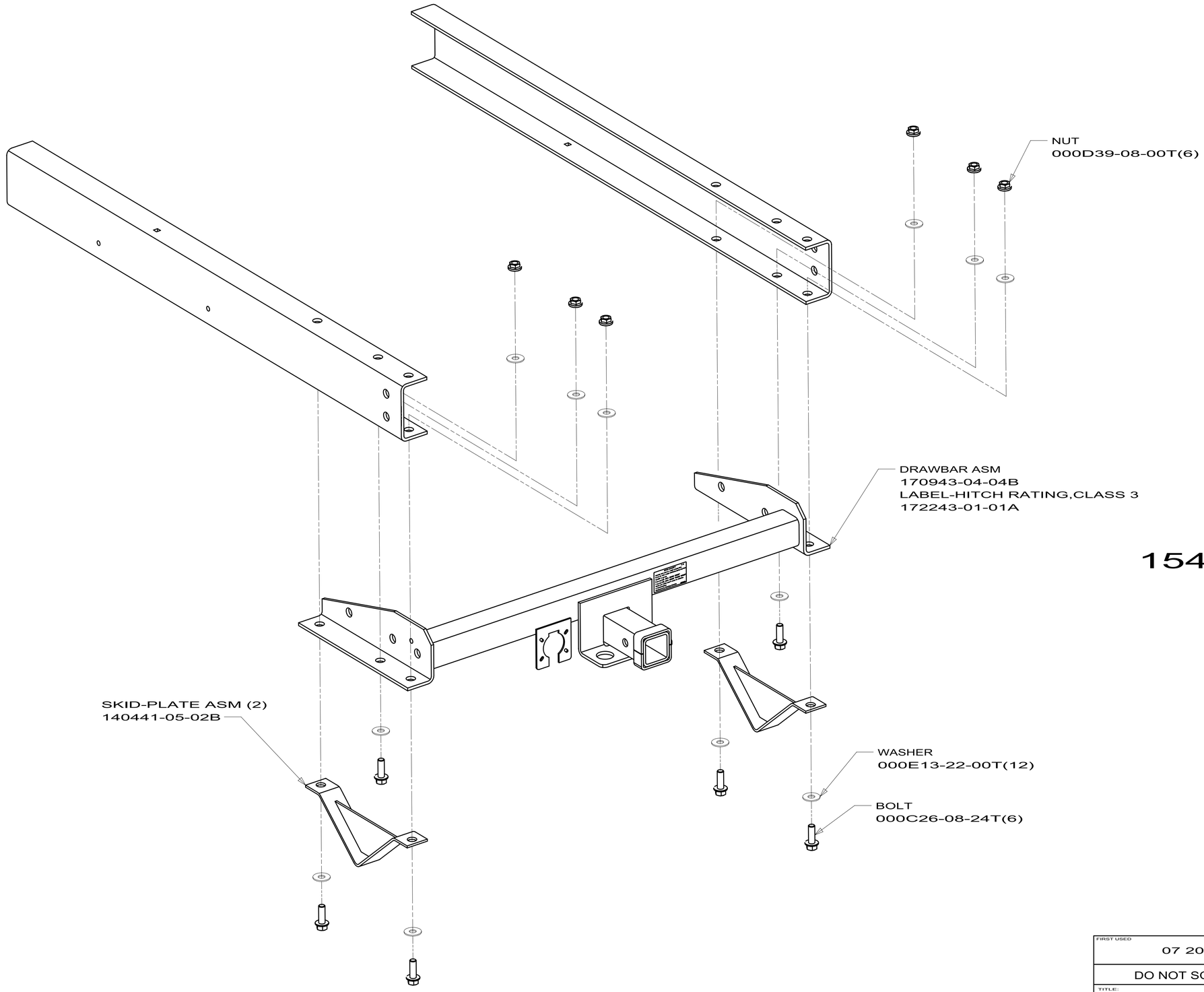

229T
231C
231J
231N
154290-05

FIRST USED	07 200-SERIES
	DO NOT SCALE DRAWING
TITLE:	HITCH INSTL
SHEET 4	PART NO 154290 REV

10/22/2009

DWG NO 135903

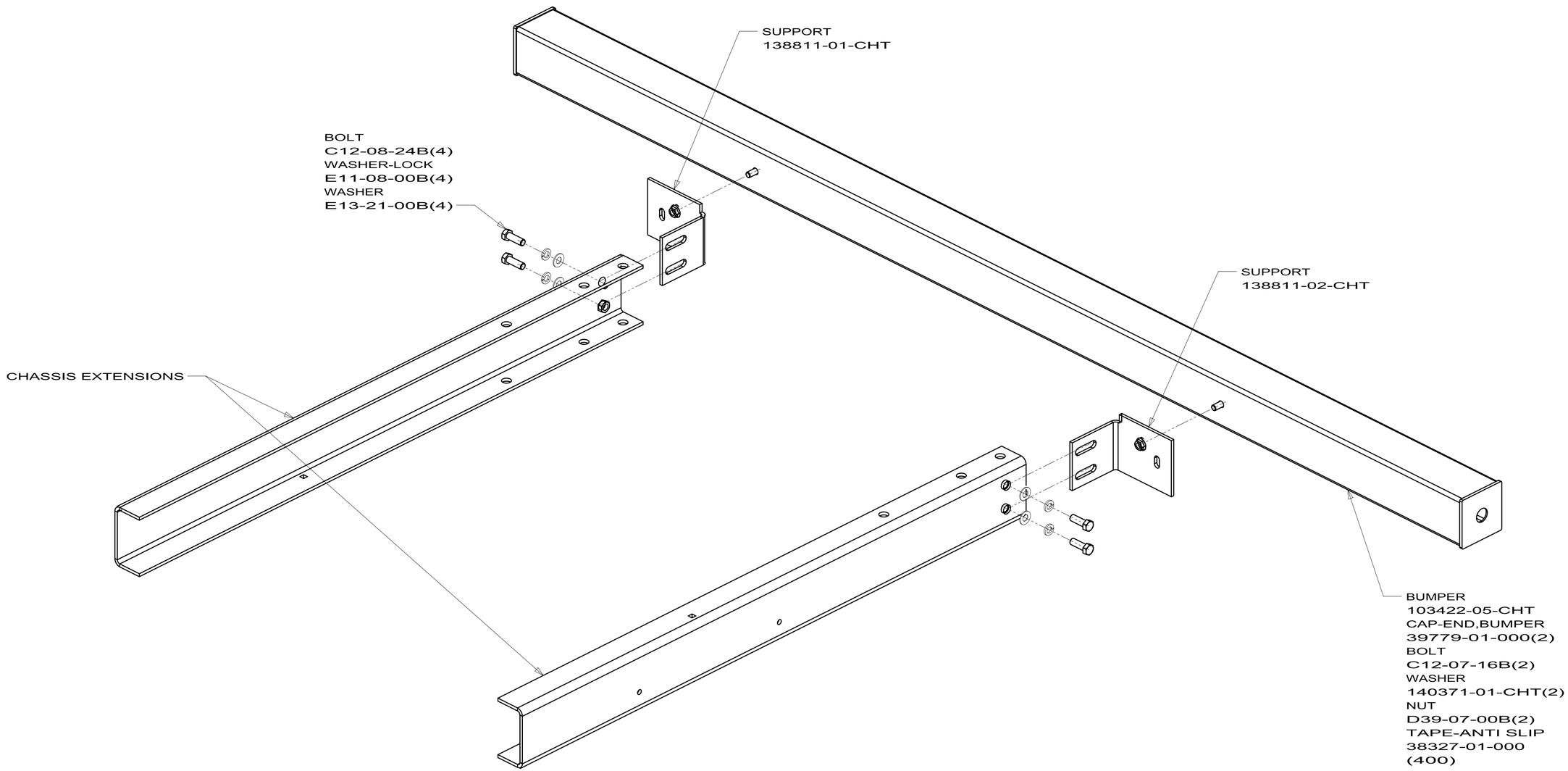

135903-02-000

FIRST USED	02 C-SERIES
	DO NOT SCALE DRAWING
TITLE:	BUMPER INSTL-REAR
SHEET 1	PART NO 135903 REV

Spare Wheel and Tire Matrix
Chassis Model Year 2008 - Current
March 17, 2009

Chassis		Wheel		Wheel Part Number	Wheel Rating	Weight (lbs.)	Tire	Maximum Tire Rating	Brand	Tire Part Number	Weight (lbs.)
Dodge	3500 Sprinter **500 Series**	Magnetto (Mercedes Benz) A 001 401 70 02 16 X 5.5, 6 bolt	CHASSIS SUPPLIED		Wheel not marked	27	LT215/85R16E	2680/2470 @ 80	Continental		27.1
Ford	E350/E450 Super Duty **200,300 & 700 Series**	Arvin Meritor 16 X 6, 8 bolt @ 6.5 8C2Z-1015-G	CHASSIS SUPPLIED		Wheel not marked	– – –	LT225/75R16E	2680/2470 @ 80	Michelin LTX M/S	**083425-14-000**	71
Ford	F53 16, 18 (2011 chassis) GVWR **E26P**	Hayes/Lemmerz (Boriem) 19.5 X 6.0 10 bolt 8U94-1015-BA	CHASSIS SUPPLIED		3750 @ 110	51.5	225/70R19.5G	3970/3750 @ 110	Continental HSR		60.8
Ford	F53 18 (2009 chassis), 20.5, & 22K GVWR **E30W,E32K D31E,D33C, D35J W/19.5 TIRE ONLY**	Accuride 29875 19.5 X 6.75, 10 bolt 5U94-1015-AA	CHASSIS SUPPLIED		4000 @ 115	59	245/70R19.5F	4080/3970 @ 85	Goodyear G670		66
Workhorse	W16/W18 **E30W**	Maxion W0007492 19.5 X 6, 10 bolt	Steel	**156482-02-000** Black	3750 @ 110	58.5	225/70R19.5F	3640/3415 @ 95	Michelin XRV	**091673-07-000**	52
Workhorse	W20-22 7,500 GAWR-F **D33C, E32K**	Maxion W0002404 19.5 X 6.75, 8 bolt	Steel	**118814-05-000**	5000 @ 115	61	245/70R19.5F	F53 16, 18 (2011 chassis) GVWR **E26P**	Goodyear G670RV	**102340-08-000**	70
Workhorse	W21/W22 8,000/8,500 GAWR-F **D31E**	Maxion W0002404 19.5 X 6.75, 8 bolt	Steel	**118814-05-000**	5000 @ 115	61	245/70R19.5G	4540/4410 @ 110	Goodyear G670RV	**102340-09-000**	70

COPYRIGHT © 2010 WINNEBAGO INDUSTRIES INC.

DWG NO 156837

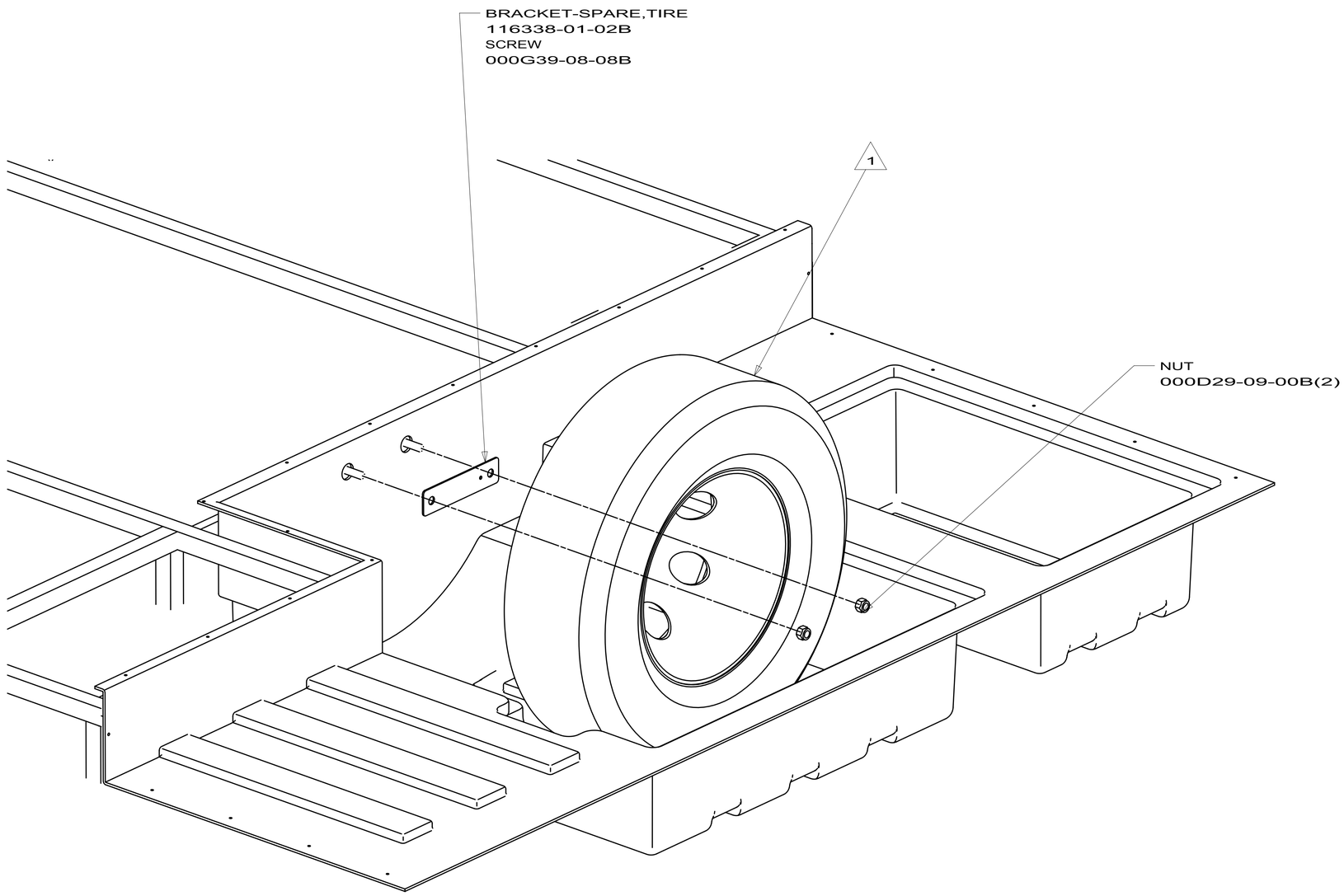

229T
231C
156837-01-XXX

1. SEE SHEET 1 MATRIX.

NOTES:

FIRST USED	07 231C
	DO NOT SCALE DRAWING
TITLE:	SPARE TIRE COMPL
SHEET 2	PART NO 156837 REV

1/16/2010

DWG NO 159483

2010 AND UP WHEEL TRIM MATRIX

	TIRE AND WHEELS		WHEELCOVERS		WHEEL LINERS				CHASSIS-SUPPLIED PARTS IF ORDERED W/ALUMINUM WHEEL				
	TIRE/WHEEL ∅ & WIDTH	WHEEL P/N & MFGR	WHEEL COVERS	VALVE EXTENSION	WHEEL LINERS	VALVE EXTENSION	STABILIZER	TORQ. WHEEL LINER	ALUMINUM WHEEL	HUB COVER	VALVE EXTENSION	STABILIZER	NUT COVER
CHEVY C BODY (14050) NOT USED	225/75R 16"X6.5"	ACCURIDE 29361 AFTERMARKET ACCURIDE 29588	109443-05	REAR:(4)77030-01 REMOVE COVER FOR ACCESS FRONT: (2)77030-01	110435-23-000	REAR INNER (2)95012-09 △6 REAR OUTER (2)77030-10 FRONT (2)77030-10	(2)95012-07	PUSH ON (NA)	156797 -01 (2) FRONT -02 (2) REAR	156797 -03 (2) FRONT -04 (2) REAR	REAR INNER (2)77030-01	-	REPLACE NUTS W/ (32) 156797-06 NUT COVERS (32) 149749-05
DODGE SPRINTER 2500 BVAN 100 SERIES	245/75R 16"X6.5" (1KD)	ALUM DODGE 68004980AA STL(SPARE) DODGE 1J97SZ0AA	N/A	N/A	N/A	N/A	N/A	N/A	DODGE 68004980AA	DODGE 51045708AA (CENTER CAP)	N/A	N/A	BOLT/DODGE 68013444AA
SPRINTER 6 BOLT 16" (DUAL) 50O/H SERIES	215/85R 16"X5.5" (1KB) (1KM)	MAGNETTO MERCEDES A 001 401 71 02	N/A	N/A	154970-02	CHASSIS SUPPLIED REAR	-	PUSH ON (NA)	168919 -01 SET FRONT -02 SET REAR	168919 -03 SET FRONT -04 SET REAR	---	---	PART OF HUB COVER SET(S)
FORD A BODY F53 10 BOLT 19.5" E/D SERIES	245/70R 19.5"X6.75" (16K) (16H) (2009)	ACCURIDE 29875	N/A	N/A	154672-01	REAR INNER (2)95012-09 △6 REAR OUTER (2)77030-10 FRONT CAP ONLY	(2)95012-07	41-47 NM 30-35 LB/FT TORQUE	N/A	-	-	-	
FORD A BODY F53 D/J SERIES	235/80R 22.5"X7.5" (16L) (16Z)	ALCOA DURA-BRITE 873400	N/A	-	-	-	-	-	- △1	KIT WITH ATTACHMENT 150723-01 △5	REAR INNER (2)77030-10 △5	-	-
FREIGHT LINER (REAR ENGINE) P/R SERIES (1AF) (1LE)	255/80R 22.5"X8.25" 295/80R 22.5"X8.25" (1LT) (1LU)	ACCURIDE 50487	N/A	N/A	-	REAR INNER (2)77030-11 REAR OUTER (2)77030-10 FRONT (2)77030-01	(2)77030-11	41-47 NM 30-35 LB/FT TORQUE	(2)133429-03 (2)133429-04 ACCURIDE 29697 IFS ONLY FRONT ACCURIDE 29560	FRONT FCCC (2)A22-53422-000 129058-15(2) 129058-16/19 129058-17/20 OR 129058-21/22 △2	REAR △1 INSIDE 129058-06 (2)	129058-18 (2) △1	(40)129058-10
FORD C BODY E350/450 200/300/700 SERIES	225/75R 16"X6" (16C) (16Y)	(ARVIN MERRITOR) FORD 8C24-1015-H	109443 -05-000	REAR: FORD 1/2" FRONT: FORD 1/2" (LIKE 077030-10) REMOVE COVER FOR REAR ACCESS	110435-23-000	REAR INNER (2)95012-05 △6 REAR OUTER AND FRONT CHASSIS SUPPLIED 1/2"(77030-10)	(2)95012-07	PUSH ON (NA)	(2)149749-01 (2)149749-02 (UP TO 06-22-09) (2)149749-07 (2)149749-08 (AFTER 06-23-09)	156797 -03(2)FRONT -04(2)REAR	REAR INNER (2)77030-01	---	REPLACE NUTS W/ (32) 149749-06 NUT COVERS (32) 149749-05
FORD A BODY F53 16K 2009 E26P 18K (2011) E/D SERIES	225/70R 19.5"X6.0" (16N) (16H) (2011)	(HAYES LAMMERZ) FORD 8U94-1015-BA	N/A	N/A	154672-02	REAR INNER (2)95012-09 △6 REAR OUTER (2)77030-10 FRONT CAP ONLY	(2)95012-07	41-47NM 30-35 LB/FT	N/A	---	---	---	---
FRONT ENGINE FREIGHT LINER J SERIES	225/80R 22.5"X8.25" (1L1) (1LL)	ACCURIDE 50487	N/A	N/A	145580-05	REAR INNER (2)77030-11 REAR OUTER (2)77030-10 FRONT (2) 77030-01	(2)77030-11	41-47NM 30-35 LB/FT TORQUE	(2)133429-03 (2)133429-04 ACCURIDE 29697	FRONT FCCC(2) A22-53422-000 129058-15(2) 129058-17/20	REAR △1 INSIDE 129058-06 (2)	129058-18 (2) △1	(40)129058-10

5 △ WINNEBAGO INSTALLED.

4 △ FREIGHTLINER LOGO NOT FOR WORKHORSE APPLICATION.

3 △ NO WINNEBAGO 8 BOLT HUB COVER WITHOUT PORT.

2 △ BRACKET-17/20 FOR 145 AXLE, BRACKET-21/22 FOR 144 AXLE.

1 △ CHASSIS SUPPLIED

SOME PARTS UNIQUE TO CHASSIS MFGR., NO WINNEBAGO P/N

6 △ USE NUT SUPPLIED ON EXTENSION BETWEEN STABILIZER AND CAP.

CONTINUED ON NEXT PAGE

FIRST USED	07 MOTORHOMES
	DO NOT SCALE DRAWING
TITLE:	WHEEL INSTL
SHEET 1	PART NO 159483 REV

3/3/2010

DWG NO 159483

*FOR WINNEBAGO MODEL YEAR 2007, WINNEBAGO WILL SUPPLY LUG WRENCHES WHICH ARE SUPPLIED TO WINNEBAGO WITH THE CHASSIS. (CURRENTLY, FORD E350/E450 CUTAWAY, DODGE SPRINTER, AND FORD F53 19.5" RAIL) IN ADDITION, C-BODY CUTAWAY CHASSIS WITH ALUMINUM WHEEL OPTION, FORD CHASSIS SUPPLIED LUG WRENCH WHICH NO LONGER FITS ALUMINUM WHEEL FASTENERS WILL BE STORED UNDER PART NUMBER 112358-02-000. WINNEBAGO WILL PROVIDE LUG WRENCH AND LEVERAGE BAR TO FIT ALUMINUM WHEEL HARDWARE. WINNEBAGO WILL PROVIDE 112358-02-000 WITH STANDARD CHEVY STEEL WHEEL CHASSIS.

OTHER APPLICATIONS LISTED FOR WRENCH FIT REFERENCE

2007 AND UP

LUG WRENCH APPLICATION MATRIX

	CHASSIS	LUG WRENCH	LEVERAGE BAR	TORQUE FT/LBS
* NOT USED	CHEVY CUTAWAY G3500 8 BOLT GMT610 8 BOLT	112358-02	---	110-140
* NOT USED	CHEVY CUTAWAY ALUMINUM WHEELS G3500/GMT610 8 BOLT	80208-06	80208-02	140
* 100/500/H SERIES 1KB 1KD 1KM	DODGE SPRINTER 16" 6-BOLT	CHASSIS SUPPLIED (FLOOR COMPT. @ PASS. FEET)	CHASSIS SUPPLIED	140 (130-150)
* 200/300/700 SERIES 16C 16Y	FORD CUTAWAY E350SD/E450SD 8 BOLT	CHASSIS SUPPLIED	---	140
* 200/300/700 SERIES 16C 16Y	FORD CUTAWAY ALUMINUM WHEELS E350SD/E450SD 8 BOLT	80208-06	80208-02	140
* E/D SERIES 16H 16K	FORD RAIL F53 10 BOLT 19.5"	CHASSIS SUPPLIED	---	140
D/J SERIES 16L 16Z	FORD RAIL F53 8 BOLT 22.5" ALUMINUM	80208-04	80208-05	450-500
	FREIGHTLINER 10 BOLT NOT USED	80208-04	80208-05	450-500
E26P/E30W 1PJ 1PL	WORKHORSE W16/18 10 BOLT 19.5"	80208-06	80208-02	150 (145-155)
E/D/J SERIES 1PE 1PR 1PS 1PU 1PV	WORKHORSE W20-25 SERIES AND UFO 8 BOLT	80208-04	80208-05	450-500

FIRST USED: 07 MOTORHOMES

DO NOT SCALE DRAWING

TITLE: WHEEL INSTL

SHEET 3 | PART NO. 159483 | REV

3/16/2010

109443-05-000

KEY	PART NUMBER	U/M	DESCRIPTION	VENDOR NO.
	098532-01-700	EA	COVER-FAKE LUG NUT (PLASTIC)	SHAU-LNC
	109443-05-700	EA	WHEEL COVER - 16"SS EA=1	SHFM16-CVR

COPYRIGHT © 2009 WINNEBAGO INDUSTRIES INC.

110435-23-000

KEY	PART NUMBER	U/M	DESCRIPTION	VENDOR NO.
	110435-01-711	EA	DECAL-CENTER CAP- 2" - QTY 2	DIAMOND/2 PER BAG
	110435-23-700	EA	COVER/WHEEL - FRONT - 1 ONLY	FL60-59-FWC
	110435-23-701	EA	COVER/WHEEL - REAR - 1 ONLY	RWCFL60-59

COPYRIGHT © 2009 WINNEBAGO INDUSTRIES INC.