2009
ASPECT
WF728B
700-SERIES

HONEY CHERRY
Y37 MOONSTONE
Y39 SILVERSCREEN
Y41 CARNIVAL

BELMONT MAPLE
Y38 MOONSTONE
Y40 SILVERSCREEN
Y42 CARNIVAL

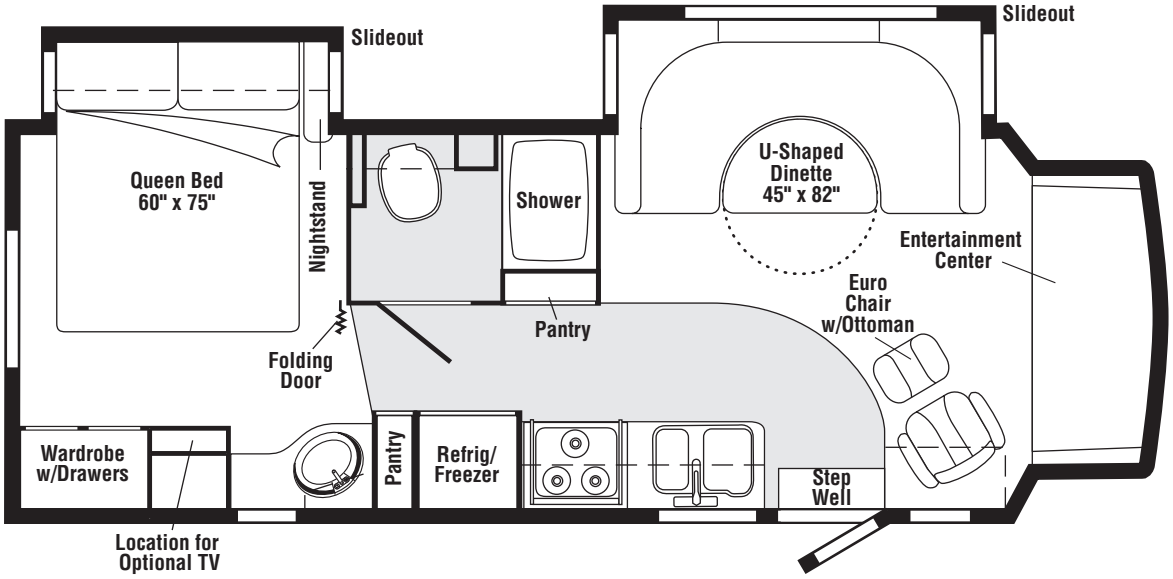

FLOORPLAN

COPYRIGHT © 2009 WINNEBAGO INDUSTRIES INC.

CONTENTS

FLOORPLAN 1
ACCESSORIES GROUP 6
OPERATORS MANUAL 6
AUDIO VIDEO GROUP 7
RADIO SYSTEM 7
COMPONENT PARTS FOR RADIO SYSTEM 7
163142-06-000 7
REAR MONITOR 8
COMPONENT PARTS FOR REAR MONITOR 8
156442-02-01A, 156442-03-01A 8
CABINET & APPLIANCE GROUP 9
CABINET & APPLIANCE LAYOUT 9
COMPONENT PARTS FOR CABINET & APPLIANCE LAYOUT 15
121568-06-01A, 121568-07-01A, 121568-08-01A 15
156801-01-01A 19
156801-03-01A 19
157570-01-01A, 157570-02-01A 20
161116-01-01A , 161116-02-01A 20
CHASSIS GROUP 21
FRAME 21
DRIVETRAIN 21
EXHAUST 22
HITCH 22
FUEL 23
HYDRAULIC LEVELING 23
157770-01-000 23
COMPONENT PARTS FOR HYDRAULIC LEVELING 23
SPARE TIRE 24
AIRSPRING - REAR 24
COMPONENT PARTS FOR REAR AIRSPRING 24
153119-01-000 24
WHEEL, TIRE, COVERS &/OR LINERS 25
COMPONENT PARTS FOR WHEEL, TIRE, COVERS &/OR LINERS 25
110435-23-000 25
CURTAIN & CUSHION GROUP 26
CURTAIN, CUSHION LAYOUT 26
165316-02-YS1 31
HARDWARE 32
ACCESSORIES 33
FABRICS 34
DRIVERS COMPARTMENT GROUP 35
FRONT INTERIOR 35
CABINETS 37

COPYRIGHT © 2009 WINNEBAGO INDUSTRIES INC.

CONTENTS (CONTINUED)

ELECTRICAL GROUP 38
110V BODY WIRING 38
12V BODY WIRING 39
EXTERIOR LAMPS 45
FRONT END 47
FRONT TV/DVD 48
COMPONENT PARTS FOR WIRING 49
076319-23-000 49
076319-25-000 49
087694-01-000 49
121935-01-01A 49
134940-06-01A 50
134940-07-01A 50
137135-05-000 51
137417-06-01A 51
154474-04-01A 51
154474-04-02A 51
163097-01-000 51
164270-01-000 51
165170-01-01A 51
165808-01-000 51
166446-01-000 51
CIRCUIT BREAKERS, FUSES & RELAYS 52
CONVERTER, INVERTER, LOAD CENTERS 52
COMPONENT PARTS FOR CONVERTER, INVERTER, LOAD CENTERS 52
083208-07-000 52
BOXES & CORDS 53
WIRE ASSEMBLIES 53
CONNECTORS & CONDUIT 54
CHASSIS 57
EXTERIOR BODY GROUP 59
GRAPHICS & PAINT 59
PANELS & TRIMS 61
FRONT END 66
MIRRORS 67
COMPONENT PARTS FOR MIRRORS 67
133908-05, 133908-06, 133908-10, 133908-11, 133908-14, 133908-15, -01A/02A 67
133908-16, 133908-17, -01A/-02A/-03A 67
167450-05-02A 67
167450-05-03A 67
167450-06-02A 68
167450-06-03A 68
LADDER 68
STRUCTURAL COMPONENTS 69
AWNINGS 70
EXTERIOR DOORS & COMPARTMENTS GROUP 71
DOOR & COMPARTMENT LAYOUT 71
COMPONENT PARTS FOR DOOR & COMPARTMENT LAYOUT 75
084103-08-000 75
094708-05-01A 76
COMPARTMENT DOOR PIECE PARTS 77
ENTRY 80
SCREEN 81
LATCH 82
EXTERIOR SLIDEOUT GROUP 83
FRONT LEFT 83
COMPONENT PARTS FOR FRONT LEFT 87
150661-01-000 87
162495-01-01A, 162495-02-01A 87
LEFT REAR 88
COMPONENT PARTS FOR LEFT REAR 92
162834-01-000 92

COPYRIGHT © 2009 WINNEBAGO INDUSTRIES INC.

CONTENTS (CONTINUED)

GENERATOR GROUP 93
GAS 93
HEATING & A/C GROUP 94
FURNACE 94
COMPONENT PARTS FOR FURNACE 95
139980-02-000 95
ROOF 97
COMPONENT PARTS FOR ROOF 97
131184-06-01A 97
131184-07-01A 98
148644-01-01A 99
148644-01-02A 100
148644-02-01A 101
148644-02-02A 102
INTERIOR FINISH GROUP 103
MOLDINGS & TRIMS 103
PANELING & LAMINATES 115
INTERIOR TRIM LAYOUT 116
COMPONENT PARTS FOR INTERIOR TRIM LAYOUT 119
131595-01-01A, 131595-05-01A, 131595-10-01A, 131595-13-01A 119
FLOOR COVERINGS 120
HARDWARE 121
LABELS GROUP 127
LP GROUP 131
LP SYSTEM 131
COMPONENT PARTS FOR LP SYSTEM 131
144116-09-000 131
SEALANTS & FASTENERS GROUP 132
SEALANTS & ADHESIVES 132
BOLTS, NUTS AND WASHERS 133
SCREWS 135
CLAMPS, CLIPS, GROMMETS, RIVETS & PLUGS 138
MISCELLANEOUS FASTENERS 139
WATER & SEWAGE GROUP 140
DRAINAGE SYSTEM 140
COMPONENT PARTS FOR DRAINAGE SYSTEM 142
136143-01-000 142
147421-01-01A, 147421-02-01A 142
WATER SYSTEM 143
COMPONENT PARTS FOR WATER SYSTEM 148
051391-03-000 148
125420-01-03A, 125420-03-03A, 125420-04-03A, 125420-05-03A, 125420-06-02A/03A/04A, ... 149
129390-04-01A 149
145541-02-000 149
165730-01-01A, 165730-02-01A 149

COPYRIGHT © 2009 WINNEBAGO INDUSTRIES INC.

CONTENTS (CONTINUED)

WINDOW & VENTS GROUP 150
WINDOW & VENT LAYOUT 150
COMPONENT PARTS FOR WINDOW & VENT LAYOUT 152
122882-01-01A 152
122882-02-01A, 122882-03-01A 152
123780-26-01A 153
150648-07-01A, 150648-22-01A 154
150648-08-01A, 150648-09-01A 154
150649-01-01A/02A 155
150649-07-01A 155
150649-15-01A 155
150649-32-01A 156
150651-01-01A/03A 157
150651-04-01A/02A 158
151075-02-01A 159
152882-01-01A 160
164922-01-01A 163
164922-24-01A/03A, 164922-46-01A 163
164973-01-01A/03A 164
164973-06-01A 164
164973-08-01A 165
164973-16-01A 165

COPYRIGHT © 2009 WINNEBAGO INDUSTRIES INC.

ACCESSORIES GROUP

OPERATORS MANUAL

KEY	PART NUMBER	U/M	DESCRIPTION
	161500-09-009	EA	MANUAL/OWNER - ASPECT - 700 SERIES - 2009
	158603-09-005	EA	MANUAL/OWNER - SUPPLEMENT - 700 SERIES - 2009
	159842-01-01A	EA	CASE - VINYL - F/MANUALS - W/SLEEVES - BLACK
	165143-01-000	DW	TOP LEVEL-700,2009

COPYRIGHT © 2009 WINNEBAGO INDUSTRIES INC.

AUDIO VIDEO GROUP

RADIO SYSTEM

KEY	PART NUMBER	U/M	DESCRIPTION
	163142-07-000	EA	RADIO-AM/FM/CD/WB - SATELLITE READY - FORD C-BODY FROM: 00-00-00 THRU: 06-01-08
	163142-14-000	EA	RADIO-AM/FM/CD/WB/G3 - SATELLITE READY - FORD C-BODY FROM: 06-02-08 THRU: 99-99-99
	163142-09-000	EA	REMOTE CONTROL/RADIO (CREDIT CARD SIZE)
	163142-10-000	EA	REMOTE CONTROL/RADIO (STEERING WHEEL MOUNT)
	163142-11-000	EA	RECEIVER (EYE) - INFRARED
	163142-12-000	EA	CABLE/INTERFACE - I-POD

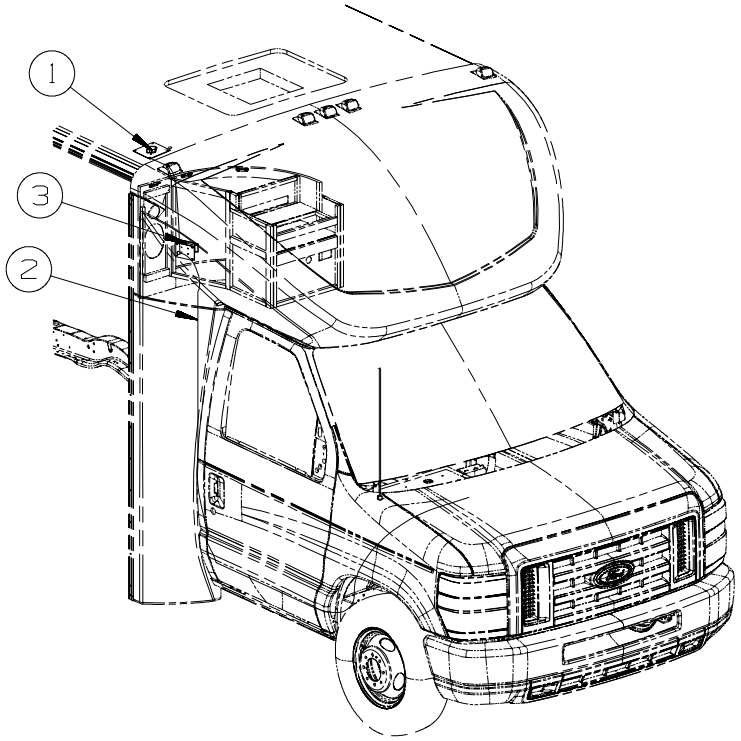

KEY	PART NUMBER	U/M	DESCRIPTION
1	158494-01-000	EA	ANTENNA/SATELLITE - RADIO/SIRIUS
2	158494-02-000	EA	CABLE/ANTENNA - SATELLITE RADIO SIRRUS
3*	163142-06-000	EA	RECEIVER (EYE) - INFRARED FROM: 00-00-00 THRU: 06-01-08
3	163142-18-000	EA	RECEIVER - SATELLITE RADIO FROM: 06-02-08 THRU: 08-17-08
3	163142-16-000	EA	RECEIVER - PORTABLE/PLUG AND PLAY - SATELLITE RADIO FROM: 08-18-08 THRU: 99-99-99
3	163142-17-000	EA	DOCKING STATION - W/18' CABLE/MOUNTING BRACKETS FROM: 08-18-08 THRU: 99-99-99

***COMPONENT PARTS LISTED LATER IN THIS GROUP**

COMPONENT PARTS FOR RADIO SYSTEM

163142-06-000

KEY	PART NUMBER	U/M	DESCRIPTION	VENDOR NO.
	163142-06-700	EA	CABLE - DATA	SIRDCBL10

COPYRIGHT © 2009 WINNEBAGO INDUSTRIES INC.

AUDIO VIDEO GROUP (CONTINUED)

REAR MONITOR

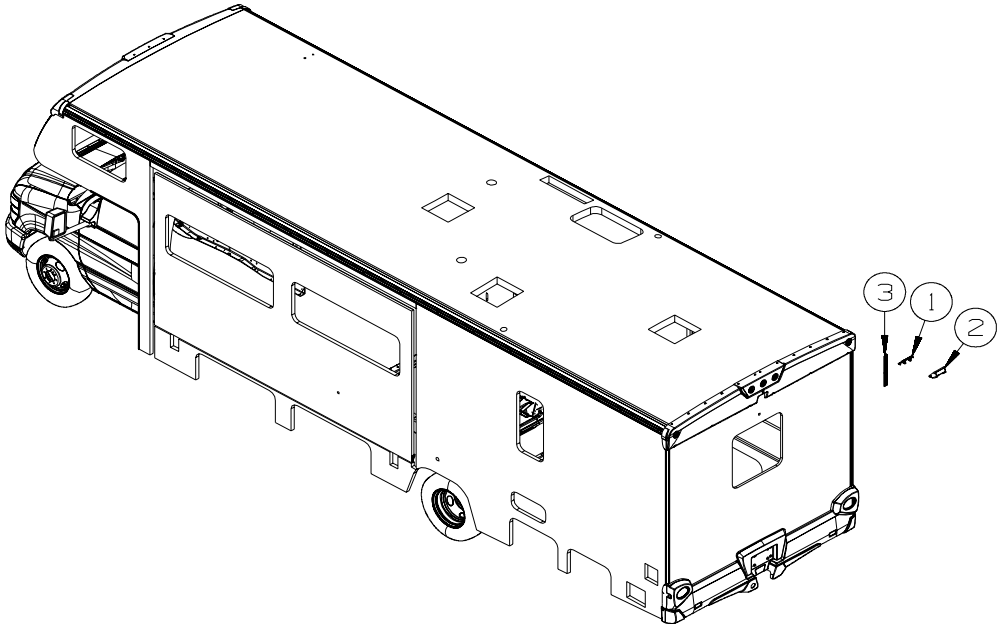

KEY	PART NUMBER	U/M	DESCRIPTION
*	156442-03-01A	EA	MONITOR/COLOR-5.6"/LCD - W/AUDIO - PLAS POD MOUNT-TAN/BLK
	144677-14-01A	EA	CAMERA - REAR VIEW W/BRACKET - WHITE - VBCS150
	144677-14-02A	EA	CAMERA - REAR VIEW W/BRACKET - BLACK - VBCS150B
1	NOT USED		
2	149237-01-01A	EA	SHROUD - CAMERA/OUTER - BRIGHT WHITE
2	149237-01-02A	EA	SHROUD - CAMERA/OUTER - PRIMED
3	NOT USED		
3	NOT USED		

***COMPONENT PARTS LISTED LATER IN THIS GROUP**

COMPONENT PARTS FOR REAR MONITOR

156442-02-01A, 156442-03-01A

KEY	PART NUMBER	U/M	DESCRIPTION	VENDOR NO.
	156442-02-700	EA	SHROUD - REAR VIEW MONITOR	33200013
	156442-02-701	EA	BRACKET - MOUNTING	32300012

COPYRIGHT © 2009 WINNEBAGO INDUSTRIES INC.

CABINET & APPLIANCE GROUP

CABINET & APPLIANCE LAYOUT

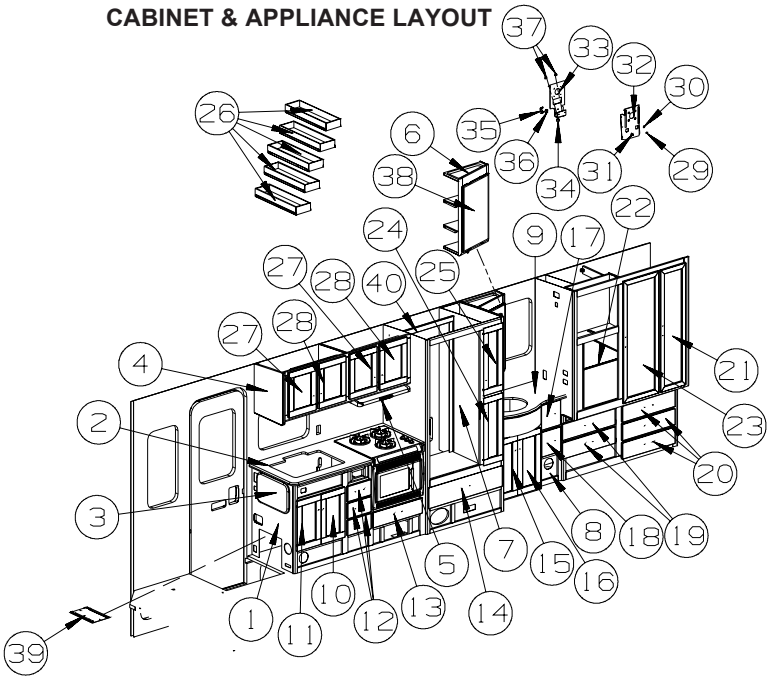

KEY	PART NUMBER	U/M	DESCRIPTION
1	P67073-01-Y37	EA	CABINET - GALLEY - W/O COUNTERTOP/DOORS/DRAWERS/HDW - HONEY CHERRY
1	P67073-01-Y38	EA	CABINET - GALLEY - W/O COUNTERTOP/DOORS/DRAWERS/HDW - BELMONT MAPLE
1	P67073-02-Y37	EA	CABINET - GALLEY - W/O COUNTERTOP/DOORS/DRAWERS/HDW - HONEY CHERRY - 40B
1	P67073-02-Y38	EA	CABINET - GALLEY - W/O COUNTERTOP/DOORS/DRAWERS/HDW - BELMONT MAPLE - 40B
1	P67073-03-Y37	EA	CABINET - GALLEY - W/O COUNTERTOP/DOORS/DRAWERS/HDW - HONEY CHERRY - 60M
1	P67073-03-Y38	EA	CABINET - GALLEY - W/O COUNTERTOP/DOORS/DRAWERS/HDW - BELMONT MAPLE - 60M
1	P67073-04-Y37	EA	CABINET - GALLEY - W/O COUNTERTOP/DOORS/DRAWERS/HDW - HONEY CHERRY - 40B/60M
1	P67073-04-Y38	EA	CABINET - GALLEY - W/O COUNTERTOP/DOORS/DRAWERS/HDW - BELMONT MAPLE - 40B/60M
2	162784-18-06A	EA	COUNTERTOP - GALLEY (Y37, Y38)
2	162784-18-04A	EA	COUNTERTOP - GALLEY (Y39, Y40)
2	162784-18-05A	EA	COUNTERTOP - GALLEY (Y41, Y42)
3	157828-25-06A	EA	COUNTERTOP - EXTENSION/GALLEY (Y37, Y38)
3	157828-25-04A	EA	COUNTERTOP - EXTENSION/GALLEY (Y39, Y40)
3	157828-25-05A	EA	COUNTERTOP - EXTENSION/GALLEY (Y41, Y42)
4	167177-01-Y37	EA	CABINET - OVERHEAD/MICROWAVE - W/O DOORS/HDW - HONEY CHERRY
4	167177-01-Y38	EA	CABINET - OVERHEAD/MICROWAVE - W/O DOORS/HDW - BELMONT MAPLE
4	167177-02-Y37	EA	CABINET - OVERHEAD/MICROWAVE - W/O DOORS/HDW - HONEY CHERRY - 265
4	167177-02-Y38	EA	CABINET - OVERHEAD/MICROWAVE - W/O DOORS/HDW - BELMONT MAPLE - 265
5*	161116-01-01A	EA	HOOD - RANGE - W/DUAL LITE/FAN - SST
5*	157570-01-01A	EA	HOOD - RANGE 24" - W/LIGHT/FAN - BLACK TEXTURED - 265 FROM: 00-00-00 THRU: 05-15-08
5*	157570-02-01A	EA	HOOD - RANGE 24" - W/LIGHT/FAN - BLACK TEXTURED - CSA - 265 FROM: 05-16-08 THRU: 99-99-99
6	167516-01-Y37	EA	CABINET - OVERHEAD/CORNER - W/O DOORS/HDW - HONEY CHERRY
6	167516-01-Y38	EA	CABINET - OVERHEAD/CORNER - W/O DOORS/HDW - BELMONT MAPLE
7*	121568-06-01A	EA	REFRIGERATOR - SMALL DBL DOOR-RH/2 WAY- 52.8"HX23.5"WX24"D
	158456-01-01A	EA	INSERT/REFRIGERATOR DOOR - 21.5"W X 14.5"H - TITANIUM SST - 086
	158456-02-01A	EA	INSERT/REFRIGERATOR DOOR - 21.5"W X 31.6"H - TITANIUM SST - 086
	116751-01-01A	EA	TRAY - REFRIGERATOR
	054450-01-000	EA	LEVEL - REFRIGERATOR
8	167067-01-Y37	EA	CABINET - VANITY - W/O COUNTERTOP/DOORS/DRAWERS/HDW - HONEY CHERRY
8	167067-01-Y38	EA	CABINET - VANITY - W/O COUNTERTOP/DOORS/DRAWERS/HDW - BELMONT MAPLE
9	162786-10-06A	EA	COUNTERTOP - LAVATORY (Y37, Y38)
9	162786-10-04A	EA	COUNTERTOP - LAVATORY (Y39, Y40)
9	162786-10-05A	EA	COUNTERTOP - LAVATORY (Y41, Y42)
10	136919-53-Y37	EA	DOOR - FLAT/PENCIL EDGE - 11.2" X 19.7" - W/O HARDWARE - HONEY CHERRY
10	136919-53-Y38	EA	DOOR - FLAT/PENCIL EDGE - 11.2" X 19.7" - W/O HARDWARE - BELMONT MAPLE
11	136919-54-Y37	EA	DOOR - FLAT/PENCIL EDGE - 11.2" X 19.7" - W/O HARDWARE - HONEY CHERRY
11	136919-54-Y38	EA	DOOR - FLAT/PENCIL EDGE - 11.2" X 19.7" - W/O HARDWARE - BELMONT MAPLE

COPYRIGHT © 2009 WINNEBAGO INDUSTRIES INC.

CABINET & APPLIANCE GROUP (CONTINUED)

CABINET & APPLIANCE LAYOUT (CONTINUED)

KEY	PART NUMBER	U/M	DESCRIPTION
12	161075-E3-Y37	EA	DRAWER - PENCIL EDGE - 8.8"W X 15.7"D - W/O SLIDES/HDW - HONEY CHERRY
12	161075-E3-Y38	EA	DRAWER - PENCIL EDGE - 8.8"W X 15.7"D - W/O SLIDES/HDW - BELMONT MAPLE
13	161075-E4-Y37	EA	DRAWER - PENCIL EDGE - 21"W X 11.8"D - W/O SLIDES/HDW - HONEY CHERRY
13	161075-E4-Y38	EA	DRAWER - PENCIL EDGE - 21"W X 11.8"D - W/O SLIDES/HDW - BELMONT MAPLE
14	161075-E5-Y37	EA	DRAWER - PENCIL EDGE - 32.4"W X 13.8"D - W/O SLIDES/HDW - HONEY CHERRY
14	161075-E5-Y38	EA	DRAWER - PENCIL EDGE - 32.4"W X 13.8"D - W/O SLIDES/HDW - BELMONT MAPLE
15	136919-44-Y37	EA	DOOR - FLAT/PENCIL EDGE - 10.8" X 23.8" - W/O HARDWARE - HONEY CHERRY
15	136919-44-Y38	EA	DOOR - FLAT/PENCIL EDGE - 10.8" X 23.8" - W/O HARDWARE - BELMONT MAPLE
16	136919-45-Y37	EA	DOOR - FLAT/PENCIL EDGE - 10.8" X 23.8" - W/O HARDWARE - HONEY CHERRY
16	136919-45-Y38	EA	DOOR - FLAT/PENCIL EDGE - 10.8" X 23.8" - W/O HARDWARE - BELMONT MAPLE
17	161075-E6-Y37	EA	DRAWER - PENCIL EDGE - 6.8"W X 11.8"D - W/O SLIDES/HDW - HONEY CHERRY
17	161075-E6-Y38	EA	DRAWER - PENCIL EDGE - 6.8"W X 11.8"D - W/O SLIDES/HDW - BELMONT MAPLE
18	161075-E7-Y37	EA	DRAWER - PENCIL EDGE - 6.8"W X 7.9"D - W/O SLIDES/HDW - HONEY CHERRY
18	161075-E7-Y38	EA	DRAWER - PENCIL EDGE - 6.8"W X 7.9"D - W/O SLIDES/HDW - BELMONT MAPLE
19	161075-B9-Y37	EA	DRAWER - PENCIL EDGE - 22.6"W X 9.8"D - W/O SLIDES/HDW - HONEY CHERRY
19	161075-B9-Y38	EA	DRAWER - PENCIL EDGE - 22.6"W X 9.8"D - W/O SLIDES/HDW - BELMONT MAPLE
20	161075-C0-Y37	EA	DRAWER - PENCIL EDGE - 22.6"W X 13.8"D - W/O SLIDES/HDW - HONEY CHERRY
20	161075-C0-Y38	EA	DRAWER - PENCIL EDGE - 22.6"W X 13.8"D - W/O SLIDES/HDW - BELMONT MAPLE
21	141507-04-Y37	EA	DOOR - MIRRORED/PENCIL EDGE - 12" X 48" - W/O HDW - HONEY CHERRY
21	141507-04-Y38	EA	DOOR - MIRRORED/PENCIL EDGE - 12" X 48" - W/O HDW - BELMONT MAPLE
	140374-09-000	EA	MIRROR - SAFETY GLASS - 8.7" X 44.7"
22	141507-10-Y37	EA	DOOR - MIRRORED/PENCIL EDGE - 20.8" X 28.7" - W/O HDW - HONEY CHERRY
22	141507-10-Y38	EA	DOOR - MIRRORED/PENCIL EDGE - 20.8" X 28.7" - W/O HDW - BELMONT MAPLE
	140374-94-000	EA	MIRROR - SAFETY GLASS - 17.6" X 25.4"
23	141507-03-Y37	EA	DOOR - MIRRORED/PENCIL EDGE - 16.7" X 48" - W/O HDW - HONEY CHERRY
23	141507-03-Y38	EA	DOOR - MIRRORED/PENCIL EDGE - 16.7" X 48" - W/O HDW - BELMONT MAPLE
24	136919-05-Y37	EA	DOOR - FLAT/PENCIL EDGE - 9" X 26.5" - W/O HARDWARE - HONEY CHERRY
24	136919-05-Y38	EA	DOOR - FLAT/PENCIL EDGE - 9" X 26.5" - W/O HARDWARE - BELMONT MAPLE
25	136919-06-Y37	EA	DOOR - FLAT/PENCIL EDGE - 9" X 26.5" - W/O HARDWARE - HONEY CHERRY
25	136919-06-Y38	EA	DOOR - FLAT/PENCIL EDGE - 9" X 26.5" - W/O HARDWARE - BELMONT MAPLE
26	153120-N9-T53	EA	DRAWER/BOX - PANTRY - 6.8"W X 23.6"D - W/O SLIDES/HDW
27	141518-83-Y37	EA	DOOR - ARCHED/PENCIL EDGE/LEFT HAND-12.8" X 17.7" -W/O HDW - HONEY CHERRY
27	141518-83-Y38	EA	DOOR - ARCHED/PENCIL EDGE/LEFT HAND-12.8" X 17.7" -W/O HDW - BELMONT MAPLE
	076767-04-000	EA	CABLE - STAINLESS STEEL - 5.9"
			FROM: 00-00-00 THRU: 10-12-08
28	141520-84-Y37	EA	DOOR - ARCHED/PENCIL EDGE/RIGHT HAND -12.8"X17.7"-W/O HDW - HONEY CHERRY
28	141520-84-Y38	EA	DOOR - ARCHED/PENCIL EDGE/RIGHT HAND -12.8"X17.7"-W/O HDW - BELMONT MAPLE
29	150082-07-000	EA	WASHER - F/TV LATCH-KEEPER - 1LY
30	150082-06-000	EA	NUT - F/TV LATCH-KEEPER - 1LY
31	150082-03-000	EA	KEEPER - W/O TV LATCH - 1LY
32	162934-04-02B	EA	SUPPORT/MOUNTING - TV - E-COATED - 1LY
33	167682-01-02B	EA	PLATE/MOUNTING - TV - E-COATED - 1LY
34	150109-01-01A	EA	KNOB - F/TV SWINGOUT - BLACK - 1LY
35	150082-04-000	EA	BRACKET - F/TV LATCH-KEEPER - 1LY
36	150082-02-000	EA	LATCH/TV - W/O KEEPER/BRACKET/ROD - 1LY
37	069726-02-000	EA	BUMPER - .88" OD X .40" THICK - BLACK - 1LY
38	145576-03-Y37	EA	DOOR - W/MIRROR - 16" X 25.9" - W/O HARDWARE
38	145576-03-Y38	EA	DOOR - W/MIRROR - 16" X 25.9" - W/O HARDWARE
	093606-36-000	EA	MIRROR - BEVELED EDGE - 16" X 26"
	076767-04-000	EA	CABLE - STAINLESS STEEL - 5.9"
39	165488-01-02B	EA	PANEL - INVERTER - E-COATED - 40B
40			REFRIGERATOR CABINET SEALS
	090329-01-000	FT	SEAL - “T” - REFRIGERATOR CABINET

***COMPONENT PARTS LISTED LATER IN THIS GROUP**

COPYRIGHT © 2009 WINNEBAGO INDUSTRIES INC.

CABINET & APPLIANCE GROUP (CONTINUED)

CABINET & APPLIANCE LAYOUT (CONTINUED)

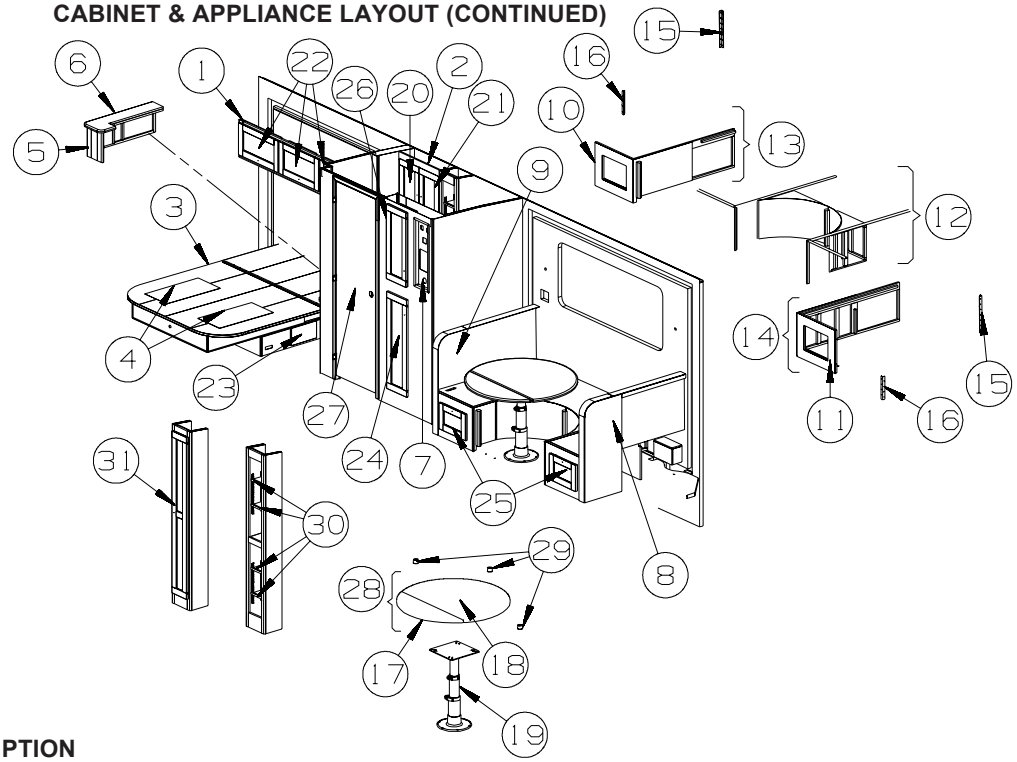

KEY	PART NUMBER	U/M	DESCRIPTION
1	165269-01-Y37	EA	CABINET - OVERHEAD/REAR - W/O DOORS/HDW - HONEY CHERRY
1	165269-01-Y38	EA	CABINET - OVERHEAD/REAR - W/O DOORS/HDW - BELMONT MAPLE
2	167425-01-Y37	EA	CABINET - OVERHEAD - W/O DOORS/HDW - HONEY CHERRY
2	167425-01-Y38	EA	CABINET - OVERHEAD - W/O DOORS/HDW - BELMONT MAPLE
	P67425-18-Y37	EA	END CAP - OVERHEAD CABINET FROM: 00-00-00 THRU: 08-31-08
	P67425-18-Y38	EA	END CAP - OVERHEAD CABINET FROM: 00-00-00 THRU: 08-31-08
3	164767-02-Y37	EA	BEDBOARD - W/HINGE/T-MOLDING - FLIP-UP
4	096764-02-000	FT	SLIPNOT - ANTISLIP - 1'WIDE (20' ROLLS) - WHITE
5	165904-02-Y37	EA	CABINET - NIGHTSTAND/RH - W/O COUNTERTOP/DOORS/DRAWERS/HDW - HONEY CHERRY
5	165904-02-Y38	EA	CABINET - NIGHTSTAND/RH - W/O COUNTERTOP/DOORS/DRAWERS/HDW - BELMONT MAPLE
6	162789-11-06A	EA	COUNTERTOP - NIGHTSTAND (Y37, Y38)
6	162789-11-04A	EA	COUNTERTOP - NIGHTSTAND (Y39, Y40)
6	162789-11-05A	EA	COUNTERTOP - NIGHTSTAND (Y41, Y42)
7	167774-01-Y37	EA	POCKET - MONITOR PANEL - HONEY CHERRY
7	167774-01-Y38	EA	POCKET - MONITOR PANEL - BELMONT MAPLE
7	167774-02-Y37	EA	POCKET - MONITOR PANEL - HONEY CHERRY - 53B
7	167774-02-Y38	EA	POCKET - MONITOR PANEL - BELMONT MAPLE - 53B
8	168118-11-Y37	EA	SEAT BACK - DINETTE - RIGHT
8	168118-11-Y38	EA	SEAT BACK - DINETTE - RIGHT
8	168118-11-Y39	EA	SEAT BACK - DINETTE - RIGHT
8	168118-11-Y40	EA	SEAT BACK - DINETTE - RIGHT
8	168118-11-Y41	EA	SEAT BACK - DINETTE - RIGHT
8	168118-11-Y42	EA	SEAT BACK - DINETTE - RIGHT
8	168118-53-Y37	EA	SEAT BACK - DINETTE - RIGHT - 22F
8	168118-53-Y38	EA	SEAT BACK - DINETTE - RIGHT - 22F
8	168118-53-Y39	EA	SEAT BACK - DINETTE - RIGHT - 22F
8	168118-53-Y40	EA	SEAT BACK - DINETTE - RIGHT - 22F
8	168118-53-Y41	EA	SEAT BACK - DINETTE - RIGHT - 22F
8	168118-53-Y42	EA	SEAT BACK - DINETTE - RIGHT - 22F
9	168118-22-Y37	EA	SEAT BACK - DINETTE - LEFT
9	168118-22-Y38	EA	SEAT BACK - DINETTE - LEFT
9	168118-22-Y39	EA	SEAT BACK - DINETTE - LEFT
9	168118-22-Y40	EA	SEAT BACK - DINETTE - LEFT
9	168118-22-Y41	EA	SEAT BACK - DINETTE - LEFT
9	168118-22-Y42	EA	SEAT BACK - DINETTE - LEFT

COPYRIGHT © 2009 WINNEBAGO INDUSTRIES INC.

CABINET & APPLIANCE GROUP (CONTINUED)

CABINET & APPLIANCE LAYOUT (CONTINUED)

KEY	PART NUMBER	U/M	DESCRIPTION
9	168118-54-Y37	EA	SEAT BACK - DINETTE - LEFT - 22F
9	168118-54-Y38	EA	SEAT BACK - DINETTE - LEFT - 22F
9	168118-54-Y39	EA	SEAT BACK - DINETTE - LEFT - 22F
9	168118-54-Y40	EA	SEAT BACK - DINETTE - LEFT - 22F
9	168118-54-Y41	EA	SEAT BACK - DINETTE - LEFT - 22F
9	168118-54-Y42	EA	SEAT BACK - DINETTE - LEFT - 22F
10	168118-25-Y37	EA	END CAP - DINETTE - SEAT BASE/LEFT - HONEY CHERRY
10	168118-25-Y38	EA	END CAP - DINETTE - SEAT BASE/LEFT - BELMONT MAPLE
11	168118-14-Y37	EA	END CAP - DINETTE - SEAT BASE/RIGHT - HONEY CHERRY
11	168118-14-Y38	EA	END CAP - DINETTE - SEAT BASE/RIGHT - BELMONT MAPLE
12	P68118-AA-Y37	EA	CABINET - SEATBASE/CENTER “CURVED” ONLY - W/O HARDWARE - HONEY CHERRY
12	P68118-AA-Y38	EA	CABINET - SEATBASE/CENTER “CURVED” ONLY - W/O HARDWARE - BELMONT MAPLE
	096764-02-000	EA	SLIPNOT - ANTISLIP - 1’WIDE (20' ROLLS) - WHITE
13	P68118-AB-Y37	EA	CABINET - SEATBASE/LEFT HAND ONLY - W/O HARDWARE - HONEY CHERRY
13	P68118-AB-Y38	EA	CABINET - SEATBASE/LEFT HAND ONLY - W/O HARDWARE - BELMONT MAPLE
	096764-02-000	EA	SLIPNOT - ANTISLIP - 1’WIDE (20' ROLLS) - WHITE
14	P68118-AC-Y37	EA	CABINET - SEATBASE/RIGHT HAND ONLY - W/O HARDWARE - HONEY CHERRY
14	P68118-AC-Y38	EA	CABINET - SEATBASE/RIGHT HAND ONLY - W/O HARDWARE - BELMONT MAPLE
	096764-02-000	EA	SLIPNOT - ANTISLIP - 1’WIDE (20' ROLLS) - WHITE
15	122021-02-02A	EA	ANGLE - W/HOLES - 13.7" LONG - OFF WHITE
16	122021-01-02A	EA	ANGLE - W/HOLES - 8.6" LONG - OFF WHITE
17	157828-31-06A	EA	COUNTERTOP - TABLE/ROUND - DROP LEAF ONLY (Y37, Y38)
17	157828-31-04A	EA	COUNTERTOP - TABLE/ROUND - DROP LEAF ONLY (Y39, Y40)
17	157828-31-05A	EA	COUNTERTOP - TABLE/ROUND - DROP LEAF ONLY (Y41, Y42)
18	162788-21-06A	EA	COUNTERTOP - TABLE - W/O HDW (Y37, Y38)
18	162788-21-04A	EA	COUNTERTOP - TABLE - W/O HDW (Y39, Y40)
18	162788-21-05A	EA	COUNTERTOP - TABLE - W/O HDW (Y41, Y42)
19	168099-01-01A	EA	PEDESTAL/TABLE - AIR ASSIST - BLACK
20	141518-38-Y37	EA	DOOR - ARCHED/PENCIL EDGE/LEFT HAND-10.8" X 16.5"-W/O HDW - HONEY CHERRY FROM: 00-00-00 THRU: 09-21-08
20	141518-17-Y37	EA	DOOR - ARCHED/PENCIL EDGE/LEFT HAND - 9.8" X 14.5"-W/O HDW - HONEY CHERRY FROM: 09-22-08 THRU: 99-99-99
20	141518-38-Y38	EA	DOOR - ARCHED/PENCIL EDGE/LEFT HAND-10.8" X 16.5"-W/O HDW - BELMONT MAPLE FROM: 00-00-00 THRU: 09-21-08
20	141518-17-Y38	EA	DOOR - ARCHED/PENCIL EDGE/LEFT HAND - 9.8" X 14.5"-W/O HDW - BELMONT MAPLE FROM: 09-22-08 THRU: 99-99-99
21	141520-39-Y37	EA	DOOR - ARCHED/PENCIL EDGE/RIGHT HAND -10.8"X16.5"- W/O HDW - HONEY CHERRY FROM: 00-00-00 THRU: 09-21-08
21	141520-18-Y37	EA	DOOR - ARCHED/PENCIL EDGE/RIGHT HAND -9.8" X 14.5"-W/O HDW - HONEY CHERRY FROM: 09-22-08 THRU: 99-99-98
21	141520-39-Y38	EA	DOOR - ARCHED/PENCIL EDGE/RIGHT HAND -10.8"X16.5"- W/O HDW - BELMONT MAPLE FROM: 00-00-00 THRU: 09-21-08
21	141520-18-Y38	EA	DOOR - ARCHED/PENCIL EDGE/RIGHT HAND -9.8" X 14.5"-W/O HDW - BELMONT MAPLE FROM: 09-22-08 THRU: 99-99-98
22	141522-67-Y37	EA	DOOR - ARCHED/PENCIL EDGE/HORIZ - 12" X 21.8" - W/O HDW - HONEY CHERRY
22	141522-67-Y38	EA	DOOR - ARCHED/PENCIL EDGE/HORIZ - 12" X 21.8" - W/O HDW - BELMONT MAPLE
23	161080-H9-Y37	EA	FACE/DRAWER - SOLID PANEL - 6.7" X 11.4" - W/O HDW - HONEY CHERRY
23	161080-H9-Y38	EA	FACE/DRAWER - SOLID PANEL - 6.7" X 11.4" - W/O HDW - BELMONT MAPLE
24	136919-50-Y37	EA	DOOR - FLAT/PENCIL EDGE - 10.8" X 36.4" - W/O HARDWARE - HONEY CHERRY
24	136919-50-Y38	EA	DOOR - FLAT/PENCIL EDGE - 10.8" X 36.4" - W/O HARDWARE - BELMONT MAPLE
25	136919-16-Y37	EA	DOOR - FLAT/PENCIL EDGE - 9.8" X 14.5" - W/O HARDWARE - HONEY CHERRY
25	136919-16-Y38	EA	DOOR - FLAT/PENCIL EDGE - 9.8" X 14.5" - W/O HARDWARE - BELMONT MAPLE
26	136919-48-Y37	EA	DOOR - FLAT/PENCIL EDGE - 10.8" X 27.9" - W/O HARDWARE - HONEY CHERRY
26	136919-48-Y38	EA	DOOR - FLAT/PENCIL EDGE - 10.8" X 27.9" - W/O HARDWARE - BELMONT MAPLE
27	144645-02-U21	EA	DOOR - BATH - W/O FRAME (PICTURE)/TOWEL RACK/HDW - HONEY CHERRY
27	144645-02-Y38	EA	DOOR - BATH - W/O FRAME (PICTURE)/TOWEL RACK/HDW - BELMONT MAPLE
28	163463-03-Y37	EA	TABLE/DINETTE - ROUND - W/DROP LEAF/HDW - W/O LEG (Y37, Y38)
28	163463-03-Y39	EA	TABLE/DINETTE - ROUND - W/DROP LEAF/HDW - W/O LEG (Y39, Y40)
28	163463-03-Y41	EA	TABLE/DINETTE - ROUND - W/DROP LEAF/HDW - W/O LEG (Y41, Y42)
29	117047-02-000	EA	BUMPER - RUBBER/WASHER INSERT FROM: 00-00-00 THRU: 07-27-08
29	120760-01-000	EA	RUBBER BUMPER - CLEAR - .1" THICK X .8" DIAMETER FROM: 07-28-08 THRU: 99-99-99

COPYRIGHT © 2009 WINNEBAGO INDUSTRIES INC.

CABINET & APPLIANCE GROUP (CONTINUED)

CABINET & APPLIANCE LAYOUT (CONTINUED)

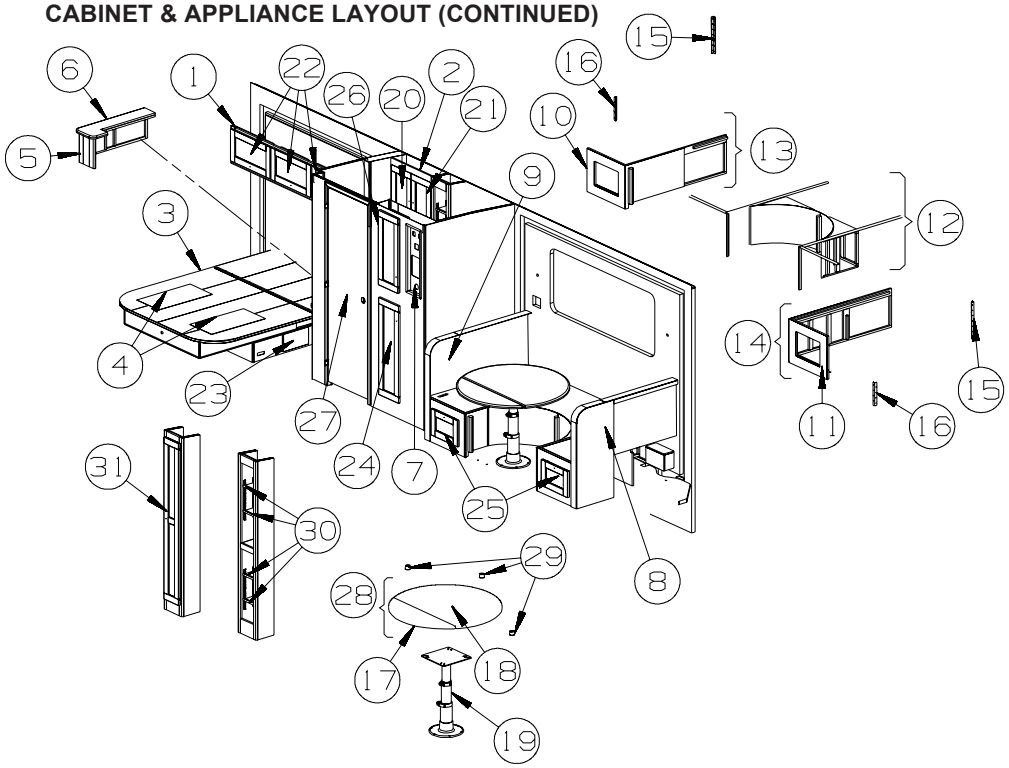

KEY	PART NUMBER	U/M	DESCRIPTION
30	167424-24-Y37	EA	SHELF - W/PLASTIC EDGE MOLDING - HONEY CHERRY FROM: 09-01-08 THRU: 99-99-99
30	167424-24-Y38	EA	SHELF - W/PLASTIC EDGE MOLDING - BELMONT MAPLE FROM: 09-01-08 THRU: 99-99-99
31	141520-01-Y37	EA	DOOR - ARCHED/PENCIL EDGE/RIGHT HAND - 8" X 60.7"- W/O HDW - HONEY CHERRY FROM: 09-01-08 THRU: 99-99-99
31	141520-01-Y38	EA	DOOR - ARCHED/PENCIL EDGE/RIGHT HAND - 8" X 60.7"- W/O HDW, - BELMONT MAPLE FROM: 09-01-08 THRU: 99-99-99

COPYRIGHT © 2009 WINNEBAGO INDUSTRIES INC.

CABINET & APPLIANCE GROUP (CONTINUED)

CABINET & APPLIANCE LAYOUT (CONTINUED)

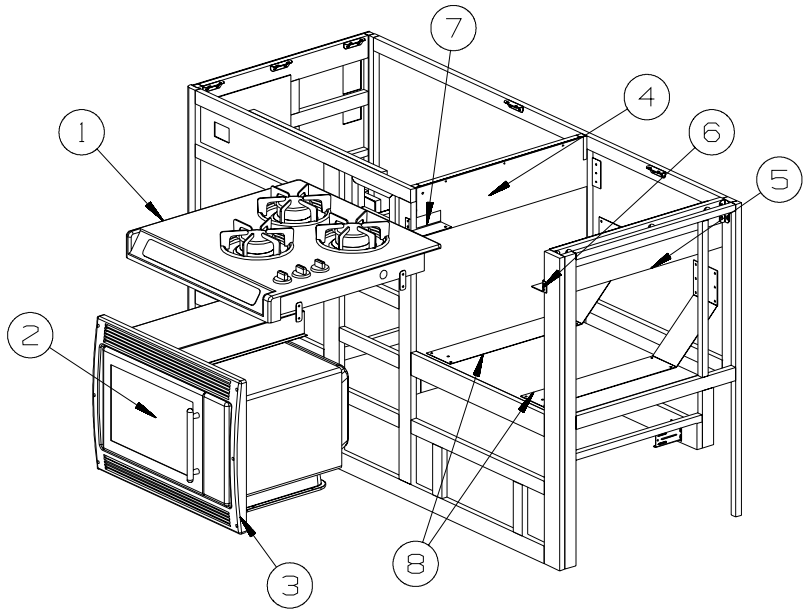

RANGE W/MICROWAVE INSTALLATION

KEY	PART NUMBER	U/M	DESCRIPTION
1*	156801-01-01A	EA	RANGE - 3 BURNER - 8100 BTU - STAINLESS STEEL
	115870-01-000	FT	SEAL/EDGE - TRIM
2	156801-02-02A	EA	OVEN/MICROWAVE - 1 CU FT/TURN TABLE - BLK/SST FACE
3*	156801-03-01A	EA	TRIM KIT - MICROWAVE - STAINLESS STEEL
4	156798-10-02B	EA	BRACKET/TIEDOWN - STOVE - E-COATED
5	156798-09-02B	EA	BRACKET/TIEDOWN - STOVE - E-COATED
6	156800-01-02B	EA	BRACKET - MICROWAVE - E-COATED
7	156800-02-02B	EA	BRACKET - MICROWAVE - E-COATED
8	156799-04-02B	EA	BRACKET - MICROWAVE - E-COATED

***COMPONENT PARTS LISTED LATER IN THIS GROUP**

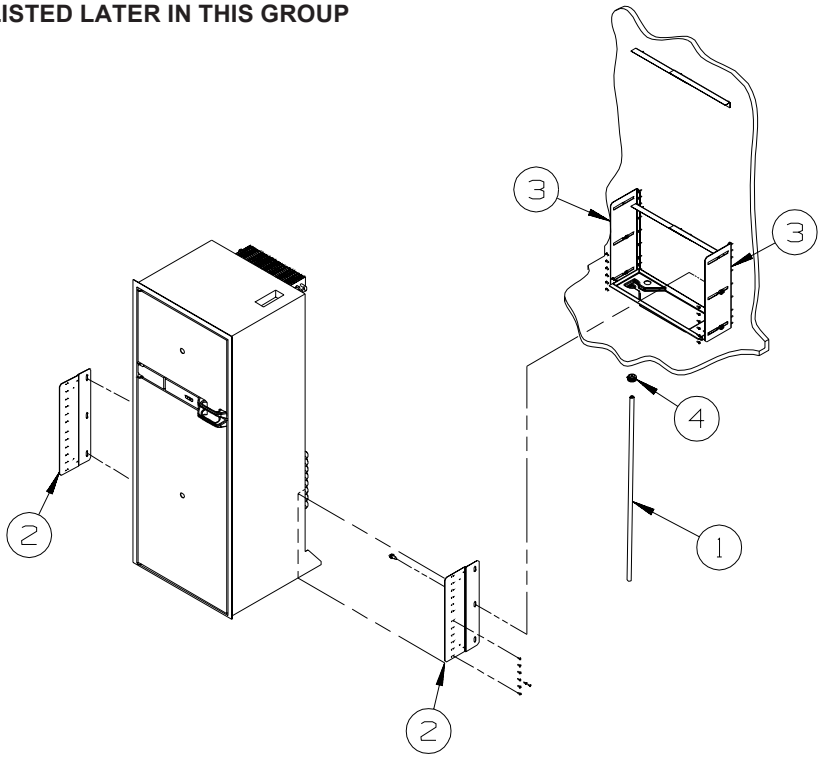

REFRIGERATOR INSTALLATION

KEY	PART NUMBER	U/M	DESCRIPTION
1	112176-01-000	FT	TUBING - VINYL - REINFORCED - 1/2" ID
2	150740-01-02B	EA	BRACKET/TIEDOWN - REFRIGERATOR - E-COATED
3	150740-02-02B	EA	BRACKET/TIEDOWN - REFRIGERATOR - E-COATED
4	152417-01-01A	EA	CLAMP/RATCHET - F/REFRIGERATOR DRIP TRAY HOSE - BLACK

COPYRIGHT © 2009 WINNEBAGO INDUSTRIES INC.

CABINET & APPLIANCE GROUP (CONTINUED)

COMPONENT PARTS FOR CABINET & APPLIANCE LAYOUT

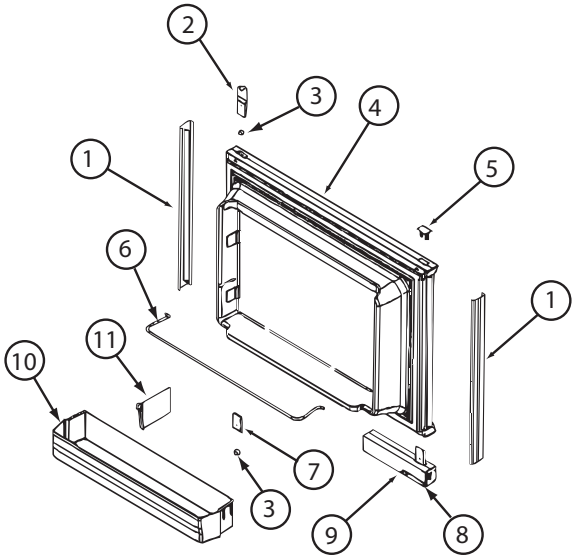

121568-06-01A, 121568-07-01A, 121568-08-01A

KEY	PART NUMBER	U/M	DESCRIPTION	VENDOR NO.
1	121568-03-700	EA	RETAINER-DOOR PNL/WAFFLE/BLK	619558-WDL-UPPER
2	120075-01-701	EA	HINGE-TOP RH/BOTTOM LH(DOOR)	618511
3	121568-03-701	EA	BUSHING - HINGE PIN/GRAY	619671
4	121568-03-702	EA	DOOR LINER-UPR/WAFFLED/BLACK	619627 - SMALL WDL
5	120075-01-702	EA	CAP, (HINGE PLUG)	618160
6	121568-01-700	EA	RAIL - DOOR UPPER	618618
7	120075-01-705	EA	HINGE-TOP LH/BOTTOM RH(DOOR)	618510
8	121568-03-705	EA	STORAGE LATCH - GRAY	619648
9	121568-03-721	EA	HANDLE/DOOR UPPER RH SWING	621465
9	121568-03-722	EA	HANDLE/DOOR LOWER RH SWING	621469
10	121568-01-701	EA	BIN - DOOR WHITE-WAFFLED LNR	618619 WDL

CONTACT WINNEBAGO PART SALES FOR UNLISTED COMPONENT(S)

COPYRIGHT © 2009 WINNEBAGO INDUSTRIES INC.

CABINET & APPLIANCE GROUP (CONTINUED)

COMPONENT PARTS FOR CABINET & APPLIANCE LAYOUT (CONTINUED)

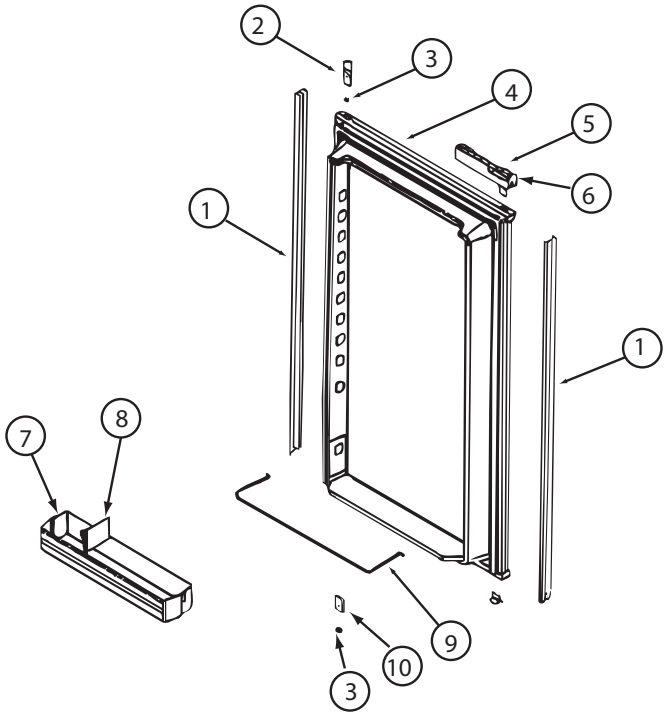

121568-06-01A, 121568-07-01A, 121568-08-01A (CONTINUED)

KEY	PART NUMBER	U/M	DESCRIPTION	VENDOR NO.
1	121568-03-706	EA	RETAINER-DOOR PNL/WAFFLE/BLK	619559-WDL-LOWER
2	120075-01-701	EA	HINGE-TOP RH/BOTTOM LH(DOOR)	618511
3	121568-03-701	EA	BUSHING - HINGE PIN/GRAY	619671
4	121568-03-707	EA	DOOR LINER-LWR/WAFFLED/B/TRM	619629
5	121568-03-722	EA	HANDLE/DOOR LOWER RH SWING	621469
6	121568-03-705	EA	STORAGE LATCH - GRAY	619648
7	121568-01-701	EA	BIN - DOOR WHITE-WAFFLED LNR	618619 WDL
9	121568-01-704	EA	RAIL - DOOR LOWER	618578
10	120075-01-705	EA	HINGE-TOP LH/BOTTOM RH(DOOR)	618510

CONTACT WINNEBAGO PART SALES FOR UNLISTED COMPONENT(S)

COPYRIGHT © 2009 WINNEBAGO INDUSTRIES INC.

CABINET & APPLIANCE GROUP (CONTINUED)

COMPONENT PARTS FOR CABINET & APPLIANCE LAYOUT (CONTINUED)

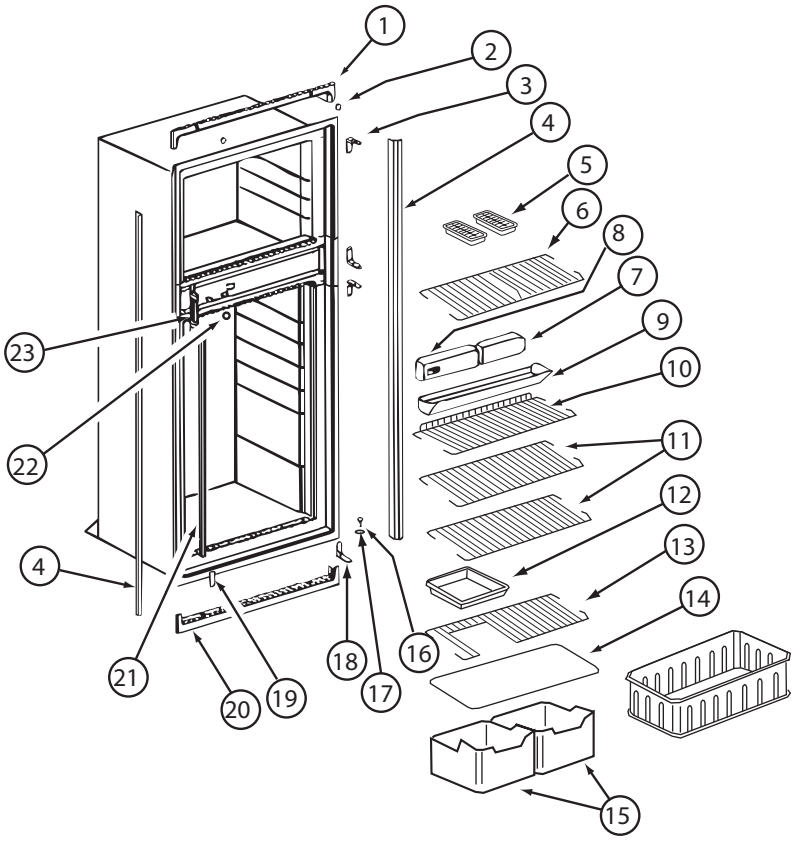

121568-06-01A, 121568-07-01A, 121568-08-01A (CONTINUED)

KEY	PART NUMBER	U/M	DESCRIPTION	VENDOR NO.
1	120075-01-713	EA	TRIM-TOP PIECE	619687
2	120075-01-714	EA	PLUG-HOLE (BLACK)	618170
3	121568-03-710	EA	HINGE/CABINET-TOP/RH-LWR/LH	619335 WAFFLED
4	121568-03-711	EA	TRIM - SIDE/BLACK	622295
6	121568-01-705	EA	SHELF - WIRE FREEZER	620250
7	121568-06-700	EA	FRONT BOX-N611	622002
8	121568-06-701	EA	CONTROL ASSY-OPTICAL/N611	621988 TO SN9056491
9	120075-01-720	EA	TRAY-DRIP	623250
9	120075-01-721	EA	LOUVER-DRIP TRAY	618176
11	121568-01-708	EA	SHELF - WIRE	620273
13	121568-01-707	EA	SHELF - WIRE - SHORT	620272
14	120075-01-725	EA	COVER-CRISPER - 18.5" WIDE	618158
15	121568-01-709	EA	CRISPER	618571
16	120075-01-727	EA	PIN-HINGE	618145
17	121568-03-701	EA	BUSHING - HINGE PIN/GRAY	619671
18	121568-03-715	EA	HINGE/CABINET-TOP/LH-LWR/RH	619336 WAFFLED
19	121568-03-716	EA	COVER - HINGE HOLES	619301
20	120075-01-729	EA	TRIM-BOTTOM PIECE	620958
21	121568-06-702	EA	CLIP - SHELF	61536522
22	121568-06-703	EA	HOLE PLUG - WHITE	620282
23	120075-01-732	EA	PLATE-STRIKE	618167

CONTACT WINNEBAGO PART SALES FOR UNLISTED COMPONENT(S)

COPYRIGHT © 2009 WINNEBAGO INDUSTRIES INC.

CABINET & APPLIANCE GROUP (CONTINUED)

COMPONENT PARTS FOR CABINET & APPLIANCE LAYOUT (CONTINUED)

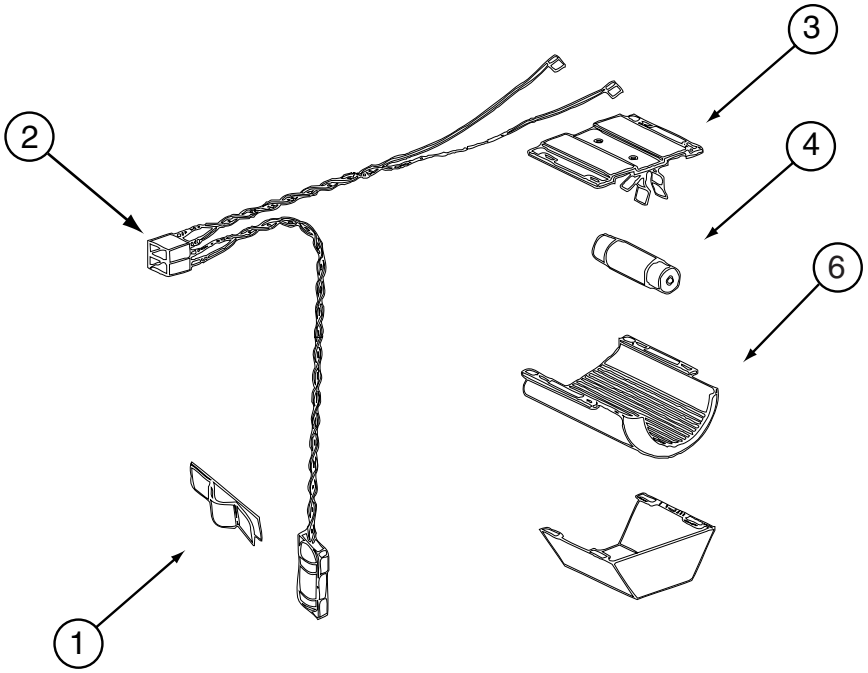

121568-03-01A, 121568-04-01A, 121568-05-01A, 121568-06-01A, 121568-07-01A, 121568-08-01A (CONTINUED)

KEY	PART NUMBER	U/M	DESCRIPTION	VENDOR NO.
1	084880-01-760	EA	CLIP (THERMISTER)	61689122
2	120075-01-735	EA	WIRE ASM - LAMP/THERMISTER	618548
3	084880-03-705	EA	BRACKET-LIGHT-INTERIOR	61629722
4	084880-03-706	EA	BULB-LAMP	61628922
6	084880-03-707	EA	COVER-LAMP, LENS	61627922

CONTACT WINNEBAGO PART SALES FOR UNLISTED COMPONENT(S)

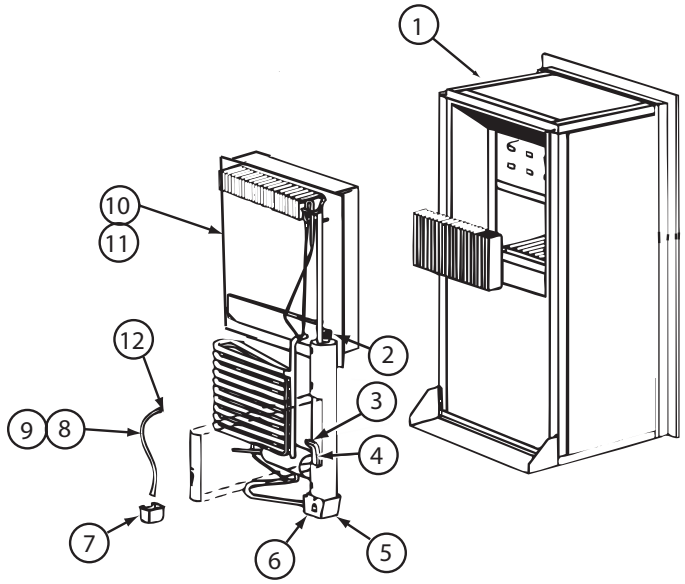

121568-06-01A, 121568-07-01A, 121568-08-01A (CONTINUED)

KEY	PART NUMBER	U/M	DESCRIPTION	VENDOR NO.
4	121568-06-704	EA	HEATER-AC/300W/120VAC	621702
10	120076-01-704	EA	COOLING UNIT, SERVICE PACK	618543

CONTACT WINNEBAGO PART SALES FOR UNLISTED COMPONENT(S)

COPYRIGHT © 2009 WINNEBAGO INDUSTRIES INC.

CABINET & APPLIANCE GROUP (CONTINUED)

COMPONENT PARTS FOR CABINET & APPLIANCE LAYOUT (CONTINUED)

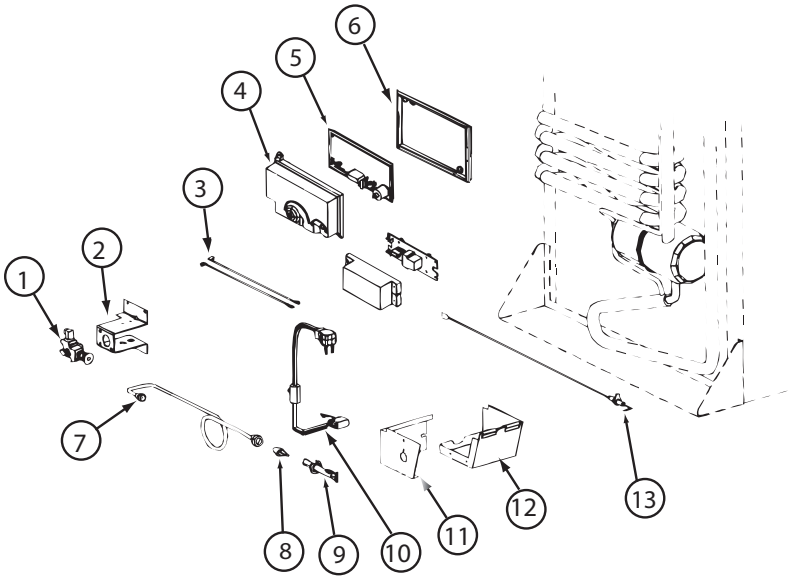

121568-06-01A, 121568-07-01A, 121568-08-01A (CONTINUED)

KEY	PART NUMBER	U/M	DESCRIPTION	VENDOR NO.
1	121568-06-705	EA	GAS VALVE/BRKT ASSY-COMBO	621439
1	121568-06-706	EA	GAS VALVE-COMBO/WRENCH FLAT	621329
4	120075-01-738	EA	COVER-POWER BOARD	618185
5	121568-06-707	EA	BOARD/POWER-N611	621991 = 621991001
6	120075-01-740	EA	BASE - POWER BOARD	618186
8	121568-06-708	EA	BURNER/ORFICE-ADAPTER KIT	621957
13	104137-06-715	EA	ELECTRODE-SPARK/SENSOR, SGL	61692222
	121569-08-704	EA	TUBE/BURNER - N8/N6	624682
			CONTACT WINNEBAGO PART SALES FOR UNLISTED COMPONENT(S)	

121568-05-01A, 121568-07-01A, 121568-08-01A (CONTINUED)

KEY	PART NUMBER	U/M	DESCRIPTION	VENDOR NO.
	121568-05-700	EA	FAN 12V KIT DBLE SIDEWALL	619020

156801-01-01A

KEY	PART NUMBER	U/M	DESCRIPTION	VENDOR NO.
	156801-01-718	EA	FITTING/OUTLET - REGULATOR	C18

156801-03-01A

KEY	PART NUMBER	U/M	DESCRIPTION	VENDOR NO.
	156801-03-700	EA	SCREW COVER F/TRIM KIT	FOR B12-S

COPYRIGHT © 2009 WINNEBAGO INDUSTRIES INC.

CABINET & APPLIANCE GROUP (CONTINUED)

COMPONENT PARTS FOR CABINET & APPLIANCE LAYOUT (CONTINUED)

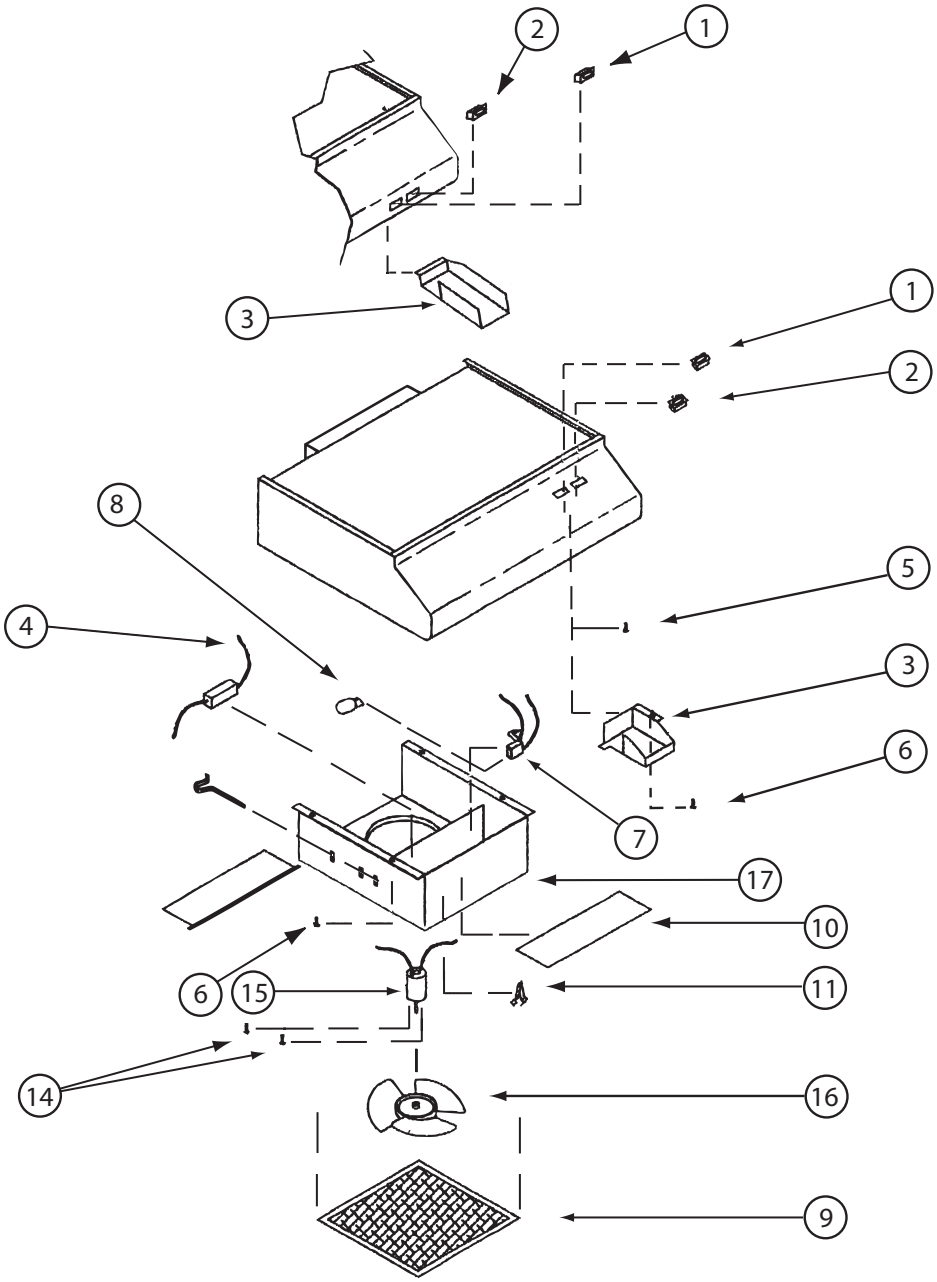

157570-01-01A, 157570-02-01A

KEY	PART NUMBER	U/M	DESCRIPTION	VENDOR NO.
1	157570-01-700	EA	SWITCH - LAMP/BLACK	L1196-00
2	157570-01-701	EA	SWITCH - FAN/BLACK	L1194-00
9	096983-01-707	EA	FILTER-MESH	CC0246-00
10	092696-02-701	EA	LENS-LAMP	CC0179-00 = CC179-2
15	157570-01-702	EA	MOTOR-12 VOLT	VD0218-00
16	136354-05-701	EA	BLADE-FAN 7" DIA	VD0216-00
			CONTACT WINNEBAGO PART SALES FOR UNLISTED COMPONENT(S)	

161116-01-01A , 161116-02-01A

KEY	PART NUMBER	U/M	DESCRIPTION	VENDOR NO.
	161116-01-700	EA	LIGHT/RND-CLEAR LENS W/BULB	W/WIRING/PLUG
	161116-02-700	EA	FILTER-ALUMINUM	02FP577295UL

COPYRIGHT © 2009 WINNEBAGO INDUSTRIES INC.

CHASSIS GROUP

FRAME

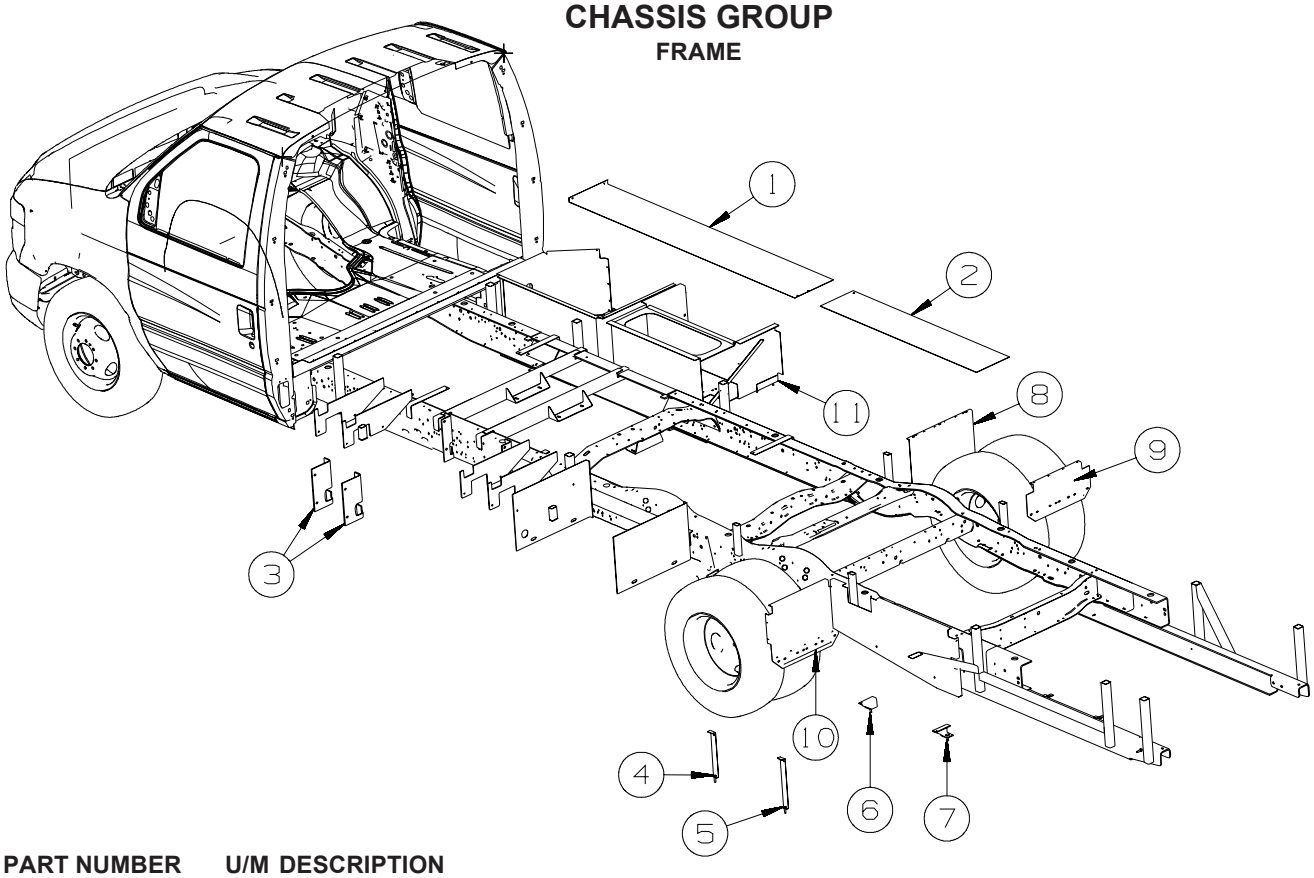

KEY	PART NUMBER	U/M	DESCRIPTION
1	135676-16-02B	EA	SHIELD - HEAT - E-COATED
2	145027-01-02B	EA	SHIELD - HEAT - E-COATED
3	147847-04-02B	EA	BRACKET - LP SUPPORT - E-COATED
4	166729-04-02B	EA	STRAP - HOLDING TANK - E-COATED
5	166729-02-02B	EA	STRAP - HOLDING TANK - E-COATED
6	168688-04-02B	EA	BRACKET - “U” - TANK - E-COATED
7	168688-02-02B	EA	BRACKET - “U” - TANK - E-COATED
8	136389-02-02B	EA	GUARD/ROCK - STEEL - W/BEND - 18"W X 14.9"H - E-COATED
9	152277-01-02B	EA	GUARD/ROCK - STEEL - W/BEND/2 NOTCHES - 18"W X 8.6"H FROM: 00-00-00 THRU: 08-28-08
9	136389-02-02B	EA	GUARD/ROCK - STEEL - W/BEND - 18"W X 14.9"H - E-COATED FROM: 08-29-08 THRU: 99-99-99
10	165695-01-02B	EA	PANEL/END - ROCK GUARD - E-COATED FROM: 00-00-00 THRU: 06-23-08
10	165695-02-02B	EA	PANEL/END - ROCK GUARD - E-COATED FROM: 06-24-08 THRU: 99-99-99
11	162352-01-02B	EA	BOX - ENTRANCE STEP - E-COATED

DRIVETRAIN

KEY	PART NUMBER	U/M	DESCRIPTION
	103653-23-000	EA	BOLT - U-JOINT - 5/16-24 X .75
	103653-24-000	EA	STRAP - U-JOINT

COPYRIGHT © 2009 WINNEBAGO INDUSTRIES INC.

CHASSIS GROUP (CONTINUED)

EXHAUST

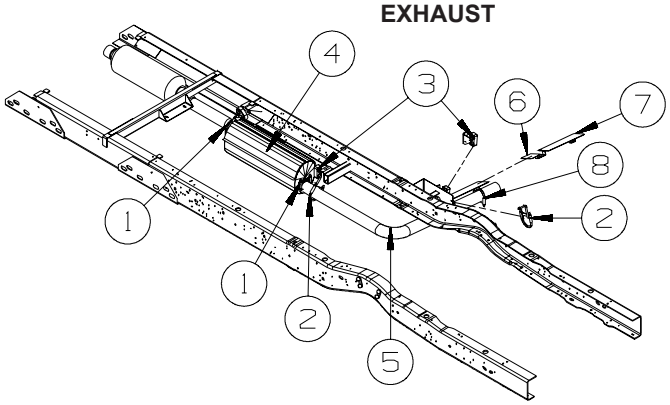

KEY	PART NUMBER	U/M	DESCRIPTION
1	094918-06-000	EA	CLAMP - EXHAUST - 3" - HEAVY DUTY
2	122392-02-02B	EA	HANGER - TAILPIPE - E-COATED
3	143811-01-000	EA	HANGER - EXHAUST - FORD F53
4	143929-04-000	EA	MUFFLER - EXHAUST
			FROM: 00-00-00 THRU: 06-21-08
4	143929-07-000	EA	MUFFLER - EXHAUST
			FROM: 06-22-08 THRU: 99-99-99
5	148094-04-000	EA	PIPE - EXHAUST/TAIL
6	143138-03-02B	EA	SHIELD - EXHAUST - E-COATED
7	143138-04-02B	EA	SHIELD - EXHAUST - E-COATED
8	094918-01-000	EA	CLAMP - EXHAUST - 3" - GUILLOTINE STYLE

HITCH

KEY	PART NUMBER	U/M	DESCRIPTION
	170943-01-04B	EA	HITCH RECEIVER/DRAWBAR - BLACK
	172243-01-01A	EA	LABEL - HITCH RATING - CLASS 3 - 5000/500 - WHT BLK

COPYRIGHT © 2009 WINNEBAGO INDUSTRIES INC.

CHASSIS GROUP (CONTINUED)

FUEL

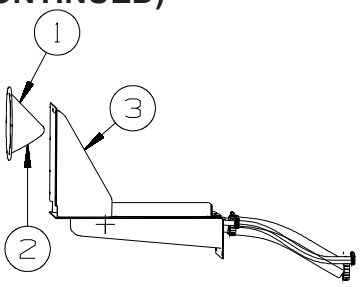

KEY	PART NUMBER	U/M	DESCRIPTION
1	127291-02-01A	EA	SHROUD - FUEL FILL - BRIGHT WHITE
2	078200-01-000	EA	GASKET - FUEL FILL - 3.5"OD X 2"ID
3	135557-06-01A	EA	SHROUD - FUEL FILL - UPPER
	135557-01-01A	EA	SHROUD - FUEL FILL - UPPER - 16" X 8.2"

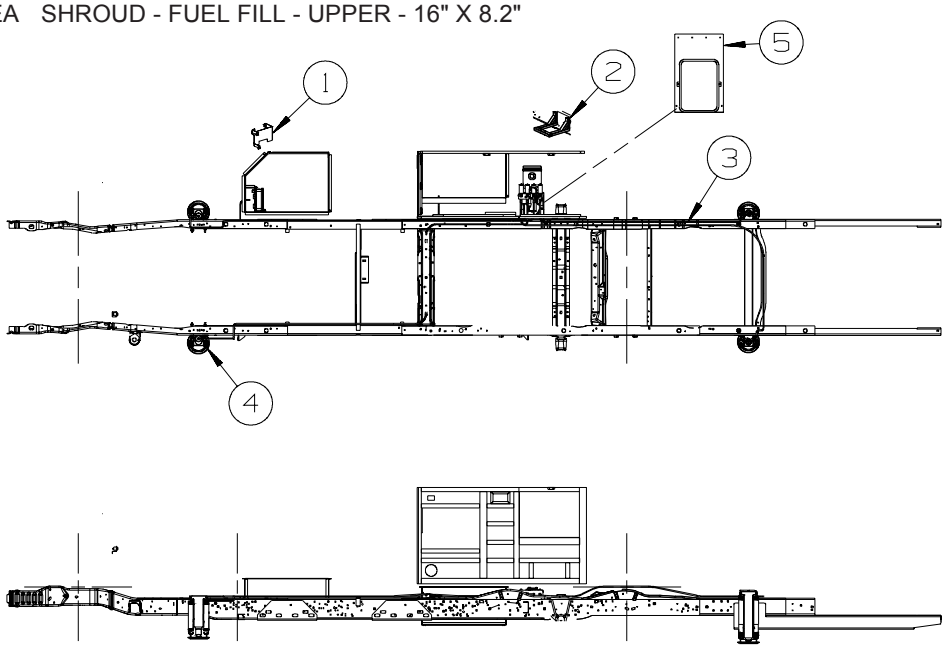

HYDRAULIC LEVELING

KEY	PART NUMBER	U/M	DESCRIPTION
1	158627-01-02B	EA	BRACKET - CONTROL BOX - E-COATED
2	162503-01-02B	EA	BRACKET/MOUNTING - PUMP - E-COATED
3	100536-65-000	EA	HOSE KIT - F/LEVELING JACKS
4*	157770-01-000	EA	LEVELING SYSTEM - 625 SYSTEM - FORD
5	166732-01-02B	EA	PANEL/CONTROL BOX - LEVELING - E-COATED

***COMPONENT PARTS LISTED LATER IN THIS GROUP**

COMPONENT PARTS FOR HYDRAULIC LEVELING

157770-01-000

KEY	PART NUMBER	U/M	DESCRIPTION	VENDOR NO.
	100532-01-717	EA	MOTOR FOR PMP/RESRV RAP90014	RAP90311
	100532-03-716	EA	SOLENOID-CONTINUOUS DUTY	RAP7505
	100532-03-717	EA	VALVE-PRESS., RETURN SHUTTLE	RAP7964
	100532-03-726	EA	SWITCH - PRESSURE	RAP8003
	100532-09-705	EA	SWITCH-PRESS - 3000 LB.	RAP0993
	100532-09-710	EA	SOLENOID-INTERMITENT DUTY	RAP0533
	100532-12-707	EA	SPRING KIT (PAIR)	R3847
	100532-32-704	EA	CHIME - JACK WARNING	RAP90681/AP19765
	131306-11-704	EA	PRESSURE SWITCH - 50 PSI	RAP2082
	131306-12-702	EA	VALVE-PRESS SOLENOID (SMALL)	RAP90729/AP24604
	144226-01-700	EA	SWITCH - WARNING/MAGNETIC	RAP90968/AP26641
	144226-08-702	EA	SENSOR/BI-AXIS - PROGRAMABLE	RAP91172/AP28010
	157770-01-700	EA	CYLINDER W/O FOOT - 4K	RAP91855/AP36046
	157770-01-701	EA	CYLINDER W/O FOOT - 6K	RAP91856
	157770-01-702	EA	SPRING KIT - 4K JACK	R91916
	157770-01-703	EA	TOUCH PAD - 625 FORD C BODY	RAP91864/AP36468
	157770-01-704	EA	ENCLOSURE BOX W/SENSING UNIT	RAP91762/AP36595
	157770-01-705	EA	PUMP/MOTOR/TANK ASM	RAP91912/AP37416

COPYRIGHT © 2009 WINNEBAGO INDUSTRIES INC.

CHASSIS GROUP (CONTINUED)

SPARE TIRE

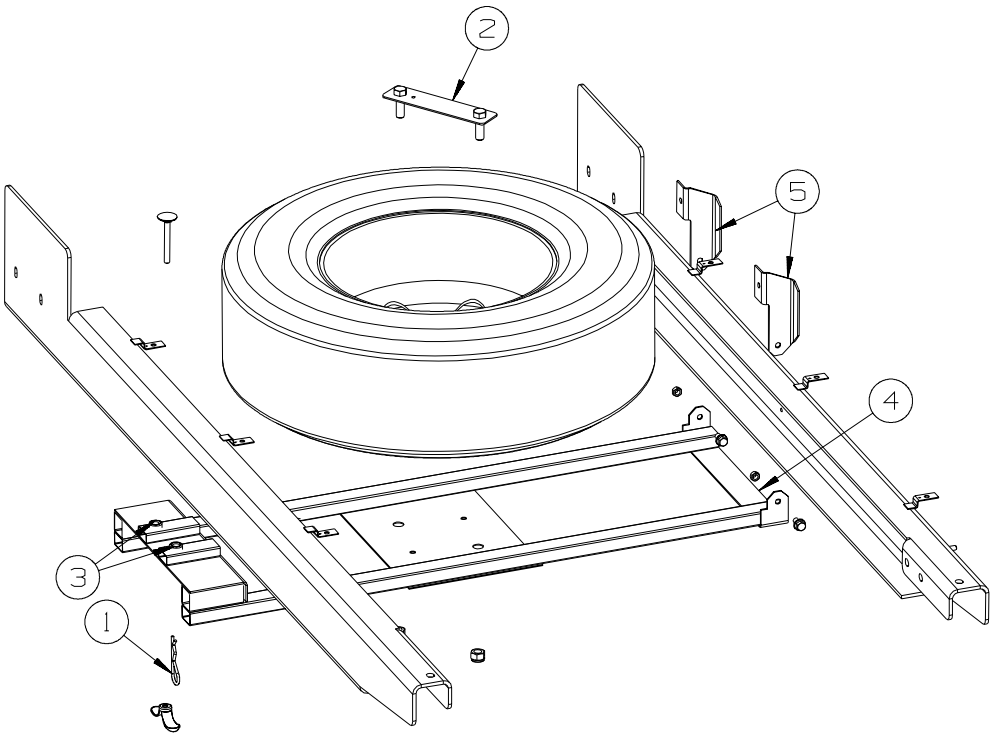

KEY	PART NUMBER	U/M	DESCRIPTION
1	034513-01-000	EA	PIN - HITCH - 3/16" WIRE
2	116338-02-02B	EA	BRACKET - SPARE TIRE - E-COATED
3	069726-02-000	EA	BUMPER - .88" OD X .40" THICK - BLACK
4	135796-02-02B	EA	CRADLE - SPARE TIRE - E-COATED
5	159923-01-02B	EA	BRACKET/HINGE - SPARE TIRE - E-COATED
	155645-01-000	EA	VALVE STEM - 1.25"

AIRSPRING - REAR

KEY	PART NUMBER	U/M	DESCRIPTION
	153119-03-000	EA	AIRSPRING - AIR BAG KIT - E450 UNDER RAIL MOUNT - 16Y

***COMPONENT PARTS LISTED LATER IN THIS GROUP**

COMPONENT PARTS FOR REAR AIRSPRING

153119-01-000

KEY	PART NUMBER	U/M	DESCRIPTION	VENDOR NO.
	084096-01-708	EA	AIRLINE SERVICE KIT	W21-760-2012
	153119-01-700	EA	AIR SPRING (AIR BAG)	W217606397
	153119-01-701	EA	BRACKET - UPPER DRIVER	W217605440
	153119-01-702	EA	BRACKET - UPPER PASSENGER	W217605441
	153119-01-703	EA	BRACKET - LOWER	W217605439
	153119-01-704	EA	BRACE - UPPER DRIVER	W217605442
	153119-01-705	EA	BRACE - UPPER PASSENGER	W217605443
	153119-01-706	EA	STRAP/CLAMP - F/BRACKET	W217605433

COPYRIGHT © 2009 WINNEBAGO INDUSTRIES INC.

CHASSIS GROUP (CONTINUED)

WHEEL, TIRE, COVERS &/OR LINERS

KEY	PART NUMBER	U/M	DESCRIPTION
	077030-01-000	EA	EXTENSION - VALVE STEM - 1.25" - METAL
	080208-02-000	EA	BAR/LEVERAGE - LUG WRENCH - 13/16" DIA - 54W
	080208-06-000	EA	LUG WRENCH - 1"/1.1" SOCKETS X 16.4" LONG - 54W
	095012-05-000	EA	EXTENSION/VALVE STEM - LIVE - 5"
	095012-07-000	EA	STABILIZER/VALVE EXTENSION - LIVE - 4"
*	110435-23-000	EA	LINER - WHEEL SET (SET=4) 16"
	149749-01-000	EA	WHEEL - ALUMINUM - 6" X 16" - FRONT - FORD E450 - 54W
	149749-02-000	EA	WHEEL - ALUMINUM - 6" X 16" - REAR - FORD E450 - 54W
	156797-03-000	EA	COVER/HUB - FRONT - ALUMINUM WHEELS - 54W
	156797-04-000	EA	COVER/HUB - REAR - ALUMINUM WHEELS - 54W
	149749-05-000	EA	COVER/NUT - 54W
	149749-06-000	EA	NUT/WHEEL - 9/16"-18 - LOW PROFILE - FORD E450 - 54W

***COMPONENT PARTS LISTED LATER IN THIS GROUP**

COMPONENT PARTS FOR WHEEL, TIRE, COVERS &/OR LINERS

110435-23-000

KEY	PART NUMBER	U/M	DESCRIPTION	VENDOR NO.
	110435-01-711	EA	DECAL-CENTER CAP- 2" - QTY 2	DIAMOND/2 PER BAG
	110435-23-700	EA	COVER/WHEEL - FRONT - 1 ONLY	FL60-59-FWC
	110435-23-701	EA	COVER/WHEEL - REAR - 1 ONLY	RWCFL60-59

COPYRIGHT © 2009 WINNEBAGO INDUSTRIES INC.

CURTAIN & CUSHION GROUP

CURTAIN, CUSHION LAYOUT

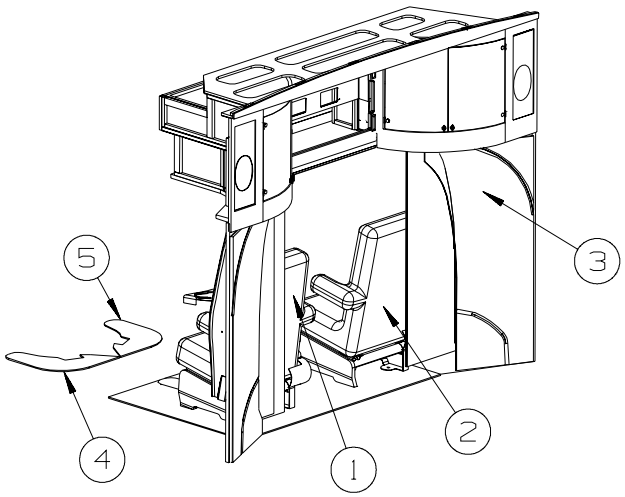

KEY	PART NUMBER	U/M	DESCRIPTION
1	158708-03-W45	EA	COVER - BACK (Y37, Y38)
1	158708-03-Y31	EA	COVER - BACK (Y39, Y40)
1	158708-03-Y29	EA	COVER - BACK (Y41, Y42)
1	158708-04-W45	EA	COVER - SEAT - DRIVER (Y37, Y38)
1	158708-04-Y31	EA	COVER - SEAT - DRIVER (Y39, Y40)
1	158708-04-Y29	EA	COVER - SEAT - DRIVER (Y41, Y42)
1	158708-05-W45	EA	COVER - ARMREST/DRIVER (Y37, Y38)
1	158708-05-Y31	EA	COVER - ARMREST/DRIVER (Y39, Y40)
1	158708-05-Y29	EA	COVER - ARMREST/DRIVER (Y41, Y42)
2	158708-03-W45	EA	COVER - BACK (Y37, Y38)
2	158708-03-Y31	EA	COVER - BACK (Y39, Y40)
2	158708-03-Y29	EA	COVER - BACK (Y41, Y42)
2	158708-06-W45	EA	COVER - ARMREST/PASSENGER (Y37, Y38)
2	158708-06-Y31	EA	COVER - ARMREST/PASSENGER (Y39, Y40)
2	158708-06-Y29	EA	COVER - ARMREST/PASSENGER (Y41, Y42)
2	158708-07-W45	EA	COVER - SEAT - PASSENGER (Y37, Y38)
2	158708-07-Y31	EA	COVER - SEAT - PASSENGER (Y39, Y40)
2	158708-07-Y29	EA	COVER - SEAT - PASSENGER (Y41, Y42)
3	168243-01-Y37	EA	CURTAIN - CAB PRIVACY - 52" X 74" (Y37, Y38)
3	168243-01-Y39	EA	CURTAIN - CAB PRIVACY - 52" X 74" (Y39, Y40)
3	168243-01-Y41	EA	CURTAIN - CAB PRIVACY - 52" X 74" (Y41, Y42)
4	163089-01-Y37	EA	MAT - FLOOR - DRIVER (Y37, Y38, Y39, Y40)
4	163089-01-Y29	EA	MAT - FLOOR - DRIVER (Y41, Y42)
5	163089-02-Y37	EA	MAT - FLOOR - PASSENGER (Y37, Y38, Y39, Y40)
5	163089-02-Y29	EA	MAT - FLOOR - PASSENGER (Y41, Y42)

COPYRIGHT © 2009 WINNEBAGO INDUSTRIES INC.

CURTAIN & CUSHION GROUP (CONTINUED)

CURTAIN, CUSHION LAYOUT (CONTINUED)

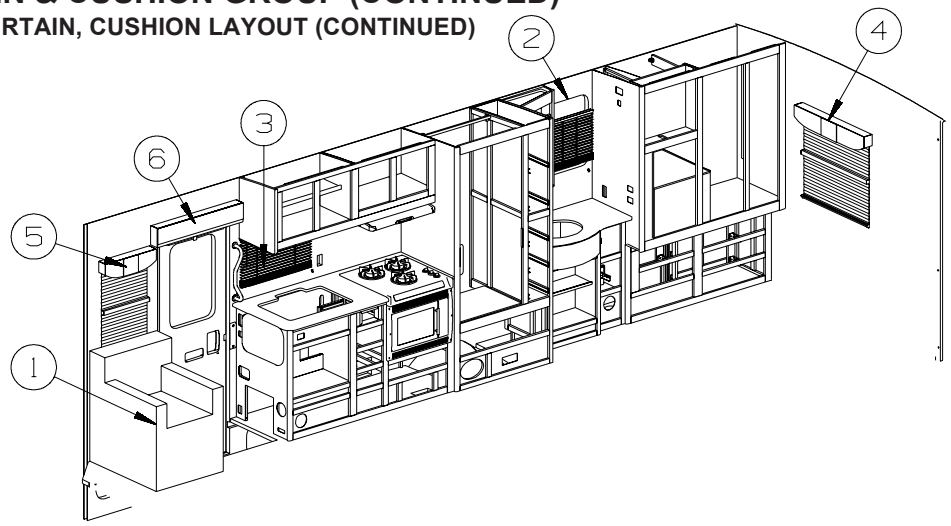

KEY	PART NUMBER	U/M	DESCRIPTION
1	165316-02-W70	EA	CHAIR - EURO/PALERMO - W/OTTOMAN (Y37, Y38)
			FROM: 00-00-00 THRU: 04-05-09
1	173405-01-YH0	EA	CHAIR - EURO - W/OTTOMAN (Y37, Y38)
			FROM: 04-06-09 THRU: 99-99-99
	173405-A1-YH0	EA	COVER - CHAIR (Y37, Y38)
			FROM: 04-06-09 THRU: 99-99-99
	173405-A2--YH0	EA	COVER - OTTOMAN (Y37, Y38)
			FROM: 04-06-09 THRU: 99-99-99
1	165316-02-Y79	EA	CHAIR - EURO/PALERMO - W/OTTOMAN (Y39, Y40)
1*	165316-02-YS1	EA	CHAIR - EURO/PALERMO - W/OTTOMAN (Y41, Y42)
2	109041-A1-01A	EA	BLIND - MINI - 17" X 25"
	109353-04-000	EA	CLIP - VALANCE SLAT MOUNTING - CLEAR PLASTIC
	109441-01-000	EA	BRACKET/HOOK - BLIND HOLD DOWN - LARGE - CLEAR
	162496-01-01A	EA	BRACKET/BLIND - LEFT SIDE WHEN FACING WINDOW - CLEAR
	162496-02-01A	EA	BRACKET/BLIND - RIGHT SIDE WHEN FACING WINDOW - CLEAR
	169068-01-01A	EA	BRACKET - (CLEAT TYPE) - F/BLIND HOLD DOWN - MILKY WHITE
3	109041-57-02A	EA	BLIND - MINI - 26" X 17"
	109441-01-000	EA	BRACKET/HOOK - BLIND HOLD DOWN - LARGE - CLEAR
	109441-02-000	EA	SPACER/BRACKET - BLIND HOLD DOWN
	162496-01-01A	EA	BRACKET/BLIND - LEFT SIDE WHEN FACING WINDOW - CLEAR
	162496-02-01A	EA	BRACKET/BLIND - RIGHT SIDE WHEN FACING WINDOW - CLEAR
	169068-01-01A	EA	BRACKET - (CLEAT TYPE) - F/BLIND HOLD DOWN - MILKY WHITE
4	167802-04-Y37	EA	VALANCE - 32" (Y37, Y38)
4	167802-06-Y39	EA	VALANCE - 32" (Y39, Y40)
4	167802-08-Y41	EA	VALANCE - 32" (Y41, Y42)
	160457-01-01A	EA	BRACE - VALANCE - L-SHAPED - 20" - OFF WHITE
4	157506-15-Y01	EA	BLIND - PLEATED - 30" X 28" (Y37, Y38, Y41, Y42)
4	157506-15-Y03	EA	BLIND - PLEATED - 30" X 28" (Y39, Y40)
4	140789-66-Y15	EA	BLIND - DAY/NIGHTER - 17" X 26" (Y37, Y38, Y41, Y42) - 086
4	140789-66-Y11	EA	BLIND - DAY/NIGHTER - 17" X 26" (Y39, Y40) - 086
	097565-01-000	EA	BRACKET - MOUNTING - PLEATED BLIND
5	167802-21-Y37	EA	VALANCE - 25" (Y37, Y38)
5	167802-22-Y39	EA	VALANCE - 25" (Y39, Y40)
5	167802-21-Y41	EA	VALANCE - 25" (Y41, Y42)
	105648-01-02A	EA	BRACE - VALANCE - 14" - OFF WHITE
5	157506-50-Y01	EA	BLIND - PLEATED - 30" X 28" (Y37, Y38, Y41, Y42)
5	157506-50-Y31	EA	BLIND - PLEATED - 30" X 28" (Y39, Y40)
5	140789-31-W53	EA	BLIND - DAY/NIGHTER - 17" X 26" (Y37, Y38) - 086
			FROM: 00-00-00 THRU: 05-25-08
5	140789-31-Y37	EA	BLIND - DAY/NIGHTER - 17" X 26" (Y37, Y38) - 086
			FROM: 05-26-08 THRU: 99-99-99
5	140789-31-Y39	EA	BLIND - DAY/NIGHTER - 17" X 26" (Y39, Y40) - 086
5	140789-31-Y37	EA	BLIND - DAY/NIGHTER - 17" X 26" (Y41, Y42) - 086
	097565-01-000	EA	BRACKET - MOUNTING - PLEATED BLIND
6	166165-13-Y37	EA	VALANCE - ABBOTT - 32" X 6" (Y37, Y38)
6	166165-14-Y39	EA	VALANCE - ABBOTT - 32" X 6" (Y39, Y40)
6	166165-13-Y41	EA	VALANCE - ABBOTT - 32" X 6" (Y41, Y42)
	160457-01-01A	EA	BRACE - VALANCE - L-SHAPED - 20" - OFF WHITE

COPYRIGHT © 2009 WINNEBAGO INDUSTRIES INC.

CURTAIN & CUSHION GROUP (CONTINUED)

CURTAIN & CUSHION LAYOUT (CONTINUED)

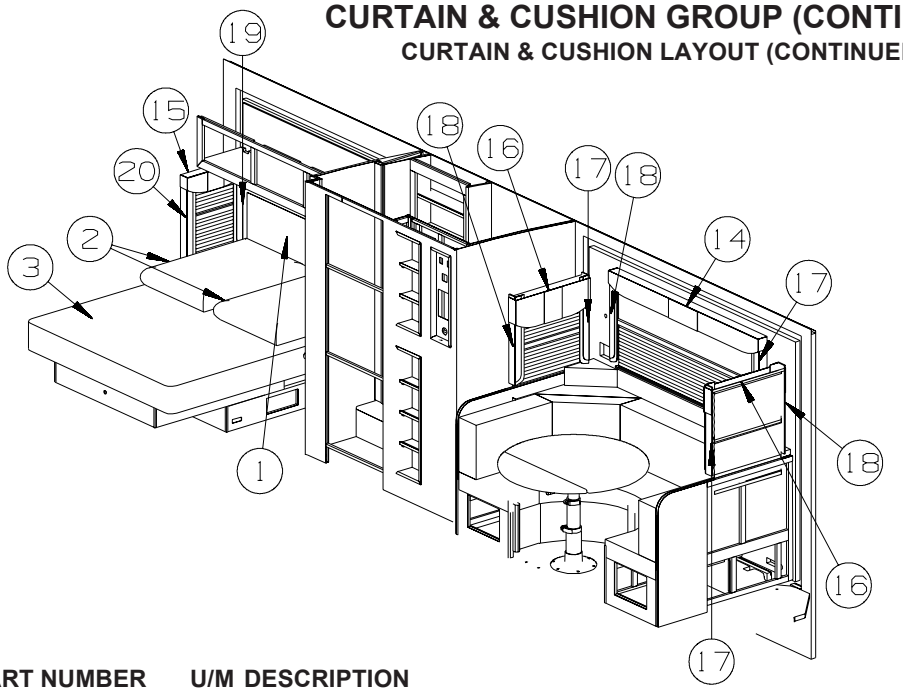

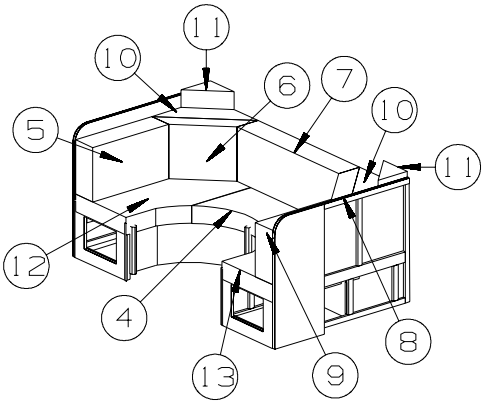

KEY	PART NUMBER	U/M	DESCRIPTION
1	147660-03-Y37	EA	HEADBOARD - 25" X 59.5" - FABRIC COVERED (Y37, Y38)
1	147660-04-Y39	EA	HEADBOARD - 25" X 59.5" - FABRIC COVERED (Y39, Y40)
1	147660-05-Y41	EA	HEADBOARD - 25" X 59.5" - FABRIC COVERED (Y41, Y42)
2	167851-01-Y37	EA	PILLOW SHAM - W/PILLOW - QUEEN (Y37, Y38)
2	167851-02-Y39	EA	PILLOW SHAM - W/PILLOW - QUEEN (Y39, Y40)
2	167851-03-Y41	EA	PILLOW SHAM - W/PILLOW - QUEEN (Y41, Y42)
3	162699-01-Y37	EA	BEDSPREAD/CAP - 60" X 75" (Y37, Y38)
3	162699-01-Y39	EA	BEDSPREAD/CAP - 60" X 75" (Y39, Y40)
3	162699-01-Y41	EA	BEDSPREAD/CAP - 60" X 75" (Y41, Y42)
3	162699-18-Y37	EA	BEDSPREAD/CAP - 60" X 75" (Y37, Y38) - 49F
3	162699-18-Y39	EA	BEDSPREAD/CAP - 60" X 75" (Y39, Y40) - 49F
3	162699-18-Y41	EA	BEDSPREAD/CAP - 60" X 75" (Y41, Y42) - 49F
4	150855-10-Y37	EA	CUSHION - SEAT/CENTER - DINETTE (Y37, Y38)
4	150855-51-W39	EA	CUSHION - SEAT/CENTER - DINETTE (Y39, Y40)
4	150855-10-Y41	EA	CUSHION - SEAT/CENTER - DINETTE (Y41, Y42)
4	150855-20-W45	EA	CUSHION - SEAT/CENTER - DINETTE (Y37, Y38) - 22F
4	150855-20-Y39	EA	CUSHION - SEAT/CENTER - DINETTE (Y39, Y40) - 22F
4	150855-20-Y41	EA	CUSHION - SEAT/CENTER - DINETTE (Y41, Y42) - 22F
	P50855-10-Y37	EA	COVER/CUSHION - SEAT/CENTER - DINETTE (Y37, Y38)
	P50855-51-W39	EA	COVER/CUSHION - SEAT/CENTER - DINETTE (Y39, Y40)
	P50855-10-Y41	EA	COVER/CUSHION - SEAT/CENTER - DINETTE (Y41, Y42)
	P50855-20-W45	EA	COVER/CUSHION - SEAT/CENTER - DINETTE (Y37, Y38) - 22F
	P50855-20-Y39	EA	COVER/CUSHION - SEAT/CENTER - DINETTE (Y39, Y40) - 22F
	P50855-20-Y41	EA	COVER/CUSHION - SEAT/CENTER - DINETTE (Y41, Y42) - 22F
5	150855-24-Y37	EA	CUSHION - BACK/TOP - LEFT - DINETTE (Y37, Y38)
5	150855-01-W39	EA	CUSHION - BACK/TOP - LEFT - DINETTE (Y39, Y40)
5	150855-24-Y41	EA	CUSHION - BACK/TOP - LEFT - DINETTE (Y41, Y42)
5	150855-14-W45	EA	CUSHION - BACK/TOP - LEFT - DINETTE (Y37, Y38) - 22F
5	150855-14-Y39	EA	CUSHION - BACK/TOP - LEFT - DINETTE (Y39, Y40) - 22F
5	150855-14-Y41	EA	CUSHION - BACK/TOP - LEFT - DINETTE (Y41, Y42) - 22F
	P50855-24-Y37	EA	COVER/CUSHION - BACK/TOP - LEFT - DINETTE (Y37, Y38)
	P50855-01-W39	EA	COVER/CUSHION - BACK/TOP - LEFT - DINETTE (Y39, Y40)
	P50855-24-Y41	EA	COVER/CUSHION - BACK/TOP - LEFT - DINETTE (Y41, Y42)
	P50855-14-W45	EA	COVER/CUSHION - BACK/TOP - LEFT - DINETTE (Y37, Y38) - 22F
	P50855-14-Y39	EA	COVER/CUSHION - BACK/TOP - LEFT - DINETTE (Y39, Y40) - 22F
	P50855-14-Y41	EA	COVER/CUSHION - BACK/TOP - LEFT - DINETTE (Y41, Y42) - 22F
6	150855-25-Y37	EA	CUSHION - BACK/CORNER TOP - LEFT - DINETTE (Y37, Y38)
6	150855-03-W39	EA	CUSHION - BACK/CORNER TOP - LEFT - DINETTE (Y39, Y40)
6	150855-25-Y41	EA	CUSHION - BACK/CORNER TOP - LEFT - DINETTE (Y41, Y42)
6	150855-15-W45	EA	CUSHION - BACK/CORNER TOP - LEFT - DINETTE (Y37, Y38) - 22F
6	150855-15-Y39	EA	CUSHION - BACK/CORNER TOP - LEFT - DINETTE (Y39, Y40) - 22F
6	150855-15-Y41	EA	CUSHION - BACK/CORNER TOP - LEFT - DINETTE (Y41, Y42) - 22F
	P50855-25-Y37	EA	COVER/CUSHION - BACK/CORNER TOP - LEFT - DINETTE (Y37, Y38)
	P50855-03-W39	EA	COVER/CUSHION - BACK/CORNER TOP - LEFT - DINETTE (Y39, Y40)

COPYRIGHT © 2009 WINNEBAGO INDUSTRIES INC.

CURTAIN & CUSHION GROUP (CONTINUED)

CURTAIN & CUSHION LAYOUT (CONTINUED)

KEY	PART NUMBER	U/M	DESCRIPTION
	P50855-25-Y41	EA	COVER/CUSHION - BACK/CORNER TOP - LEFT - DINETTE (Y41, Y42)
	P50855-15-W45	EA	COVER/CUSHION - BACK/CORNER TOP - LEFT - DINETTE (Y37, Y38) - 22F
	P50855-15-Y39	EA	COVER/CUSHION - BACK/CORNER TOP - LEFT - DINETTE (Y39, Y40) - 22F
	P50855-15-Y41	EA	COVER/CUSHION - BACK/CORNER TOP - LEFT - DINETTE (Y41, Y42) - 22F
7	150855-26-Y37	EA	CUSHION - BACK/CENTER TOP - DINETTE (Y37, Y38)
7	150855-05-W39	EA	CUSHION - BACK/CENTER TOP - DINETTE (Y39, Y40)
7	150855-26-Y41	EA	CUSHION - BACK/CENTER TOP - DINETTE (Y41, Y42)
7	150855-16-W45	EA	CUSHION - BACK/CENTER TOP - DINETTE (Y37, Y38) - 22F
7	150855-16-Y39	EA	CUSHION - BACK/CENTER TOP - DINETTE (Y39, Y40) - 22F
7	150855-16-Y41	EA	CUSHION - BACK/CENTER TOP - DINETTE (Y41, Y42) - 22F
	P50855-26-Y37	EA	COVER/CUSHION - BACK/CENTER TOP - DINETTE (Y37, Y38)
	P50855-05-W39	EA	COVER/CUSHION - BACK/CENTER TOP - DINETTE (Y39, Y40)
	P50855-26-Y41	EA	COVER/CUSHION - BACK/CENTER TOP - DINETTE (Y41, Y42)
	P50855-16-W45	EA	COVER/CUSHION - BACK/CENTER TOP - DINETTE (Y37, Y38) - 22F
	P50855-16-Y39	EA	COVER/CUSHION - BACK/CENTER TOP - DINETTE (Y39, Y40) - 22F
	P50855-16-Y41	EA	COVER/CUSHION - BACK/CENTER TOP - DINETTE (Y41, Y42) - 22F
8	150855-27-Y37	EA	CUSHION - BACK/CORNER TOP - RIGHT - DINETTE (Y37, Y38)
8	150855-07-W39	EA	CUSHION - BACK/CORNER TOP - RIGHT - DINETTE (Y39, Y40)
8	150855-27-Y41	EA	CUSHION - BACK/CORNER TOP - RIGHT - DINETTE (Y41, Y42)
8	150855-17-W45	EA	CUSHION - BACK/CORNER TOP - RIGHT - DINETTE (Y37, Y38) - 22F
8	150855-17-Y39	EA	CUSHION - BACK/CORNER TOP - RIGHT - DINETTE (Y39, Y40) - 22F
8	150855-17-Y41	EA	CUSHION - BACK/CORNER TOP - RIGHT - DINETTE (Y41, Y42) - 22F
	P50855-27-Y37	EA	COVER/CUSHION - BACK/CORNER TOP - RIGHT - DINETTE (Y37, Y38)
	P50855-07-W39	EA	COVER/CUSHION - BACK/CORNER TOP - RIGHT - DINETTE (Y39, Y40)
	P50855-27-Y41	EA	COVER/CUSHION - BACK/CORNER TOP - RIGHT - DINETTE (Y41, Y42)
	P50855-17-W45	EA	COVER/CUSHION - BACK/CORNER TOP - RIGHT - DINETTE (Y37, Y38) - 22F
	P50855-17-Y39	EA	COVER/CUSHION - BACK/CORNER TOP - RIGHT - DINETTE (Y39, Y40) - 22F
	P50855-17-Y41	EA	COVER/CUSHION - BACK/CORNER TOP - RIGHT - DINETTE (Y41, Y42) - 22F
9	150855-28-Y37	EA	CUSHION - BACK/TOP - RIGHT - DINETTE (Y37, Y38)
9	150855-08-W39	EA	CUSHION - BACK/TOP - RIGHT - DINETTE (Y39, Y40)
9	150855-28-Y41	EA	CUSHION - BACK/TOP - RIGHT - DINETTE (Y41, Y42)
9	150855-18-W45	EA	CUSHION - BACK/CORNER TOP - RIGHT - DINETTE (Y37, Y38) - 22F
9	150855-18-Y39	EA	CUSHION - BACK/CORNER TOP - RIGHT - DINETTE (Y39, Y40) - 22F
9	150855-18-Y41	EA	CUSHION - BACK/CORNER TOP - RIGHT - DINETTE (Y41, Y42) - 22F
	P50855-28-Y37	EA	COVER/CUSHION - BACK/TOP - RIGHT - DINETTE (Y37, Y38)
	P50855-08-W39	EA	COVER/CUSHION - BACK/TOP - RIGHT - DINETTE (Y39, Y40)
	P50855-28-Y41	EA	COVER/CUSHION - BACK/TOP - RIGHT - DINETTE (Y41, Y42)
	P50855-18-W45	EA	COVER/CUSHION - BACK/TOP - RIGHT - DINETTE (Y37, Y38) - 22F
	P50855-18-Y39	EA	COVER/CUSHION - BACK/TOP - RIGHT - DINETTE (Y39, Y40) - 22F
	P50855-18-Y41	EA	COVER/CUSHION - BACK/TOP - RIGHT - DINETTE (Y41, Y42) - 22F
10	150855-31-Y37	EA	CUSHION - CORNER BLOCK - LEFT/RIGHT - DINETTE (Y37, Y38)
10	150855-11-Y39	EA	CUSHION - CORNER BLOCK - LEFT/RIGHT - DINETTE (Y39, Y40)
10	150855-31-Y41	EA	CUSHION - CORNER BLOCK - LEFT/RIGHT - DINETTE (Y41, Y42)
10	150855-21-W45	EA	CUSHION - CORNER BLOCK - LEFT/RIGHT - DINETTE (Y37, Y38) - 22F
10	150855-21-Y39	EA	CUSHION - CORNER BLOCK - LEFT/RIGHT - DINETTE (Y39, Y40) - 22F
10	150855-21-Y41	EA	CUSHION - CORNER BLOCK - LEFT/RIGHT - DINETTE (Y41, Y42) - 22F
	P50855-31-Y37	EA	COVER/CUSHION - CORNER BLOCK - LEFT/RIGHT - DINETTE (Y37, Y38)
	P50855-11-Y39	EA	COVER/CUSHION - CORNER BLOCK - LEFT/RIGHT - DINETTE (Y39, Y40)
	P50855-31-Y41	EA	COVER/CUSHION - CORNER BLOCK - LEFT/RIGHT - DINETTE (Y41, Y42)
	P50855-21-W45	EA	COVER/CUSHION - CORNER BLOCK - LEFT/RIGHT - DINETTE (Y37, Y38) - 22F
	P50855-21-Y39	EA	COVER/CUSHION - CORNER BLOCK - LEFT/RIGHT - DINETTE (Y39, Y40) - 22F
	P50855-21-Y41	EA	COVER/CUSHION - CORNER BLOCK - LEFT/RIGHT - DINETTE (Y41, Y42) - 22F
11	150855-38-Y37	EA	CUSHION - FILLER - DINETTE (Y37, Y38)
11	150855-35-W39	EA	CUSHION - FILLER - DINETTE (Y39, Y40)
11	150855-38-Y41	EA	CUSHION - FILLER - DINETTE (Y41, Y42)
11	150855-22-W45	EA	CUSHION - FILLER - DINETTE (Y37, Y38) - 22F
11	150855-22-Y39	EA	CUSHION - FILLER - DINETTE (Y39, Y40) - 22F
11	150855-22-Y41	EA	CUSHION - FILLER - DINETTE (Y41, Y42) - 22F
	P50855-38-Y37	EA	COVER/CUSHION - FILLER - DINETTE (Y41, Y42)
	P50855-35-W39	EA	COVER/CUSHION - FILLER - DINETTE (Y39, Y40)
	P50855-38-Y41	EA	COVER/CUSHION - FILLER - DINETTE (Y41, Y42)
	P50855-22-W45	EA	COVER/CUSHION - FILLER - DINETTE (Y37, Y38) - 22F
	P50855-22-Y39	EA	COVER/CUSHION - FILLER - DINETTE (Y39, Y40) - 22F
	P50855-22-Y41	EA	COVER/CUSHION - FILLER - DINETTE (Y41, Y42) - 22F

COPYRIGHT © 2009 WINNEBAGO INDUSTRIES INC.

CURTAIN & CUSHION GROUP (CONTINUED)

CURTAIN & CUSHION LAYOUT (CONTINUED)

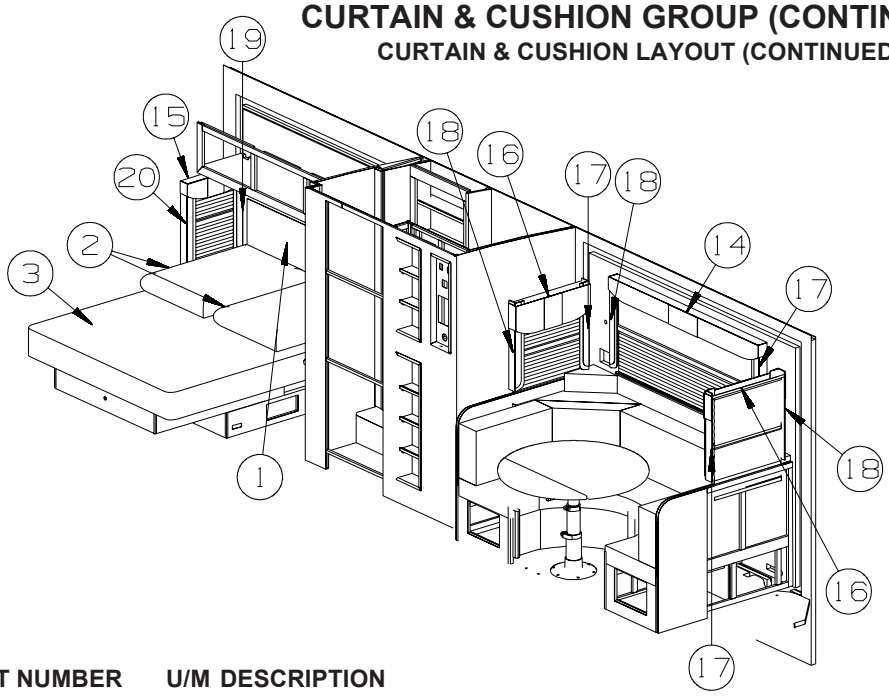

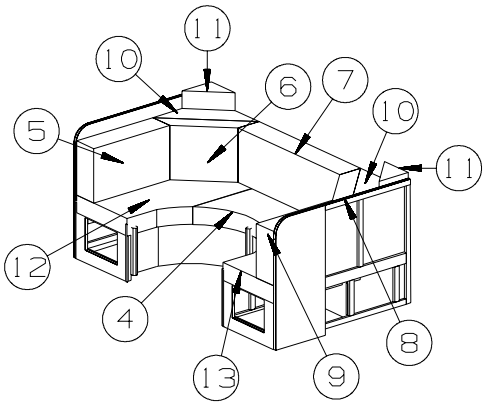

KEY	PART NUMBER	U/M	DESCRIPTION
12	150855-55-Y37	EA	CUSHION - SEAT/LEFT - DINETTE (Y37, Y38)
12	150855-59-W39	EA	CUSHION - SEAT/LEFT - DINETTE (Y39, Y40)
12	150855-55-Y41	EA	CUSHION - SEAT/LEFT - DINETTE (Y41, Y42)
12	150855-57-W45	EA	CUSHION - SEAT/LEFT - DINETTE (Y37, Y38) - 22F
12	150855-57-Y39	EA	CUSHION - SEAT/LEFT - DINETTE (Y39, Y40) - 22F
12	150855-57-Y41	EA	CUSHION - SEAT/LEFT - DINETTE (Y41, Y42) - 22F
	P50855-55-Y37	EA	COVER/CUSHION - SEAT/LEFT - DINETTE (Y37, Y38)
	P50855-59-W39	EA	COVER/CUSHION - SEAT/LEFT - DINETTE (Y39, Y40)
	P50855-55-Y41	EA	COVER/CUSHION - SEAT/LEFT - DINETTE (Y41, Y42)
	P50855-57-W45	EA	COVER/CUSHION - SEAT/LEFT - DINETTE (Y37, Y38) - 22F
	P50855-57-Y39	EA	COVER/CUSHION - SEAT/LEFT - DINETTE (Y39, Y40) - 22F
	P50855-57-Y41	EA	COVER/CUSHION - SEAT/LEFT - DINETTE (Y41, Y42) - 22F
13	150855-56-Y37	EA	CUSHION - SEAT/RIGHT - DINETTE (Y37, Y38)
13	150855-60-W39	EA	CUSHION - SEAT/RIGHT - DINETTE (Y39, Y40)
13	150855-56-Y41	EA	CUSHION - SEAT/RIGHT - DINETTE (Y41, Y42)
13	150855-58-W45	EA	CUSHION - SEAT/RIGHT - DINETTE (Y37, Y38) - 22F
13	150855-58-Y39	EA	CUSHION - SEAT/RIGHT - DINETTE (Y39, Y40) - 22F
13	150855-58-Y41	EA	CUSHION - SEAT/RIGHT - DINETTE (Y41, Y42) - 22F
	P50855-56-Y37	EA	COVER/CUSHION - SEAT/RIGHT - DINETTE (Y37, Y38)
	P50855-60-W39	EA	COVER/CUSHION - SEAT/RIGHT - DINETTE (Y39, Y40)
	P50855-56-Y41	EA	COVER/CUSHION - SEAT/RIGHT - DINETTE (Y41, Y42)
	P50855-58-W45	EA	COVER/CUSHION - SEAT/RIGHT - DINETTE (Y37, Y38) - 22F
	P50855-58-Y39	EA	COVER/CUSHION - SEAT/RIGHT - DINETTE (Y39, Y40) - 22F
	P50855-58-Y41	EA	COVER/CUSHION - SEAT/RIGHT - DINETTE (Y41, Y42) - 22F
14	167802-01-Y37	EA	VALANCE - 62" (Y37, Y38)
14	167802-02-Y39	EA	VALANCE - 62" (Y39, Y40)
14	167802-01-Y41	EA	VALANCE - 62" (Y41, Y42)
14	157506-02-Y05	EA	BLIND - PLEATED - 59" X 26.5" (Y37, Y38, Y41, Y42)
14	157506-02-Y36	EA	BLIND - PLEATED - 59" X 26.5" (Y39, Y40)
14	140789-08-W37	EA	BLIND - DAY/NIGHTER - 59" X 26.5" (Y37, Y38) - 086 FROM: 00-00-00 THRU: 05-25-08
14	140789-08-Y83	EA	BLIND - DAY/NIGHTER - 59" X 26.5" (Y37, Y38) - 086 FROM: 05-26-08 THRU: 99-99-99
14	140789-08-Y79	EA	BLIND - DAY/NIGHTER - 59" X 26.5" (Y39, Y40) - 086
14	140789-08-Y83	EA	BLIND - DAY/NIGHTER - 59" X 26.5" (Y41, Y42) - 086
	160457-01-01A	EA	BRACE - VALANCE - L-SHAPED - 20" - OFF WHITE
15	167802-03-Y37	EA	VALANCE - 19" (Y37, Y38)
15	167802-05-Y39	EA	VALANCE - 19" (Y39, Y40)
15	167802-07-Y41	EA	VALANCE - 19" (Y41, Y42)
15	157506-56-Y37	EA	BLIND - PLEATED - 17" X 26" (Y37, Y38, Y41, Y42)
15	157506-56-Y39	EA	BLIND - PLEATED - 17" X 26" (Y39, Y40)
15	140789-C2-Y37	EA	BLIND - DAY/NIGHTER - 17" X 26" (Y37, Y38, Y41, Y42) - 086
15	140789-C2-Y39	EA	BLIND - DAY/NIGHTER - 17" X 26" (Y39, Y40) - 086

COPYRIGHT © 2009 WINNEBAGO INDUSTRIES INC.

CURTAIN & CUSHION GROUP (CONTINUED)

CURTAIN & CUSHION LAYOUT (CONTINUED)

KEY	PART NUMBER	U/M	DESCRIPTION
16	167802-19-Y37	EA	VALANCE - 25" (Y37, Y38)
16	167802-20-Y39	EA	VALANCE - 25" (Y39, Y40)
16	167802-19-Y41	EA	VALANCE - 25" (Y41, Y42)
16	157506-59-Y37	EA	BLIND - PLEATED - 22.5" X 29" (Y37, Y38, Y41, Y42)
16	157506-59-Y39	EA	BLIND - PLEATED - 22.5" X 29" (Y39, Y40)
16	140789-54-W37	EA	BLIND - DAY/NIGHTER - 22.5" X 29" (Y37, Y38, Y41, Y42) - 086 FROM: 00-00-00 THRU: 05-25-08
16	140789-54-Y37	EA	BLIND - DAY/NIGHTER - 22.5" X 29" (Y37, Y38, Y41, Y42) - 086 FROM: 05-26-08 THRU: 99-99-99
16	140789-54-Y39	EA	BLIND - DAY/NIGHTER - 22.5" X 29" (Y39, Y40) - 086
16	140789-54-Y37	EA	BLIND - DAY/NIGHTER - 22.5" X 29" (Y41, Y42) - 086
	160457-01-01A	EA	BRACE - VALANCE - L-SHAPED - 20" - OFF WHITE
17	167806-01-Y37	EA	LEG - RIGHT - 25" (Y37, Y38)
17	167806-03-Y39	EA	LEG - RIGHT - 25" (Y39, Y40)
17	167806-01-Y41	EA	LEG - RIGHT - 25" (Y41, Y42)
18	167806-02-Y37	EA	LEG - LEFT - 25" (Y37, Y38)
18	167806-04-Y39	EA	LEG - LEFT - 25" (Y39, Y40)
18	167806-02-Y41	EA	LEG - LEFT - 25" (Y41, Y42)
19	167806-49-Y37	EA	LEG - RIGHT - 23.5" (Y37, Y38)
19	167806-42-Y39	EA	LEG - RIGHT - 23.5" (Y39, Y40)
19	167806-51-Y41	EA	LEG - RIGHT - 23.5" (Y41, Y42)
20	167806-50-Y37	EA	LEG - LEFT - 23.5" (Y37, Y38)
20	167806-34-Y39	EA	LEG - LEFT - 23.5" (Y39, Y40)
20	167806-52-Y41	EA	LEG - LEFT - 23.5" (Y41, Y42)
20	167329-01-02B	EA	BRACKET/ANGLE - E-COATED

***COMPONENT PARTS LISTED LATER IN THIS GROUP**

COMPONENT PARTS FOR CURTAIN & CUSHION LAYOUT

165316-02-YS1

KEY	PART NUMBER	U/M	DESCRIPTION	VENDOR NO.
	165316-02-712	EA	OTTOMAN ONLY FOR -02-YS1	WILLIAMSBURG &YG4

COPYRIGHT © 2009 WINNEBAGO INDUSTRIES INC.

CURTAIN & CUSHION GROUP (CONTINUED)

HARDWARE

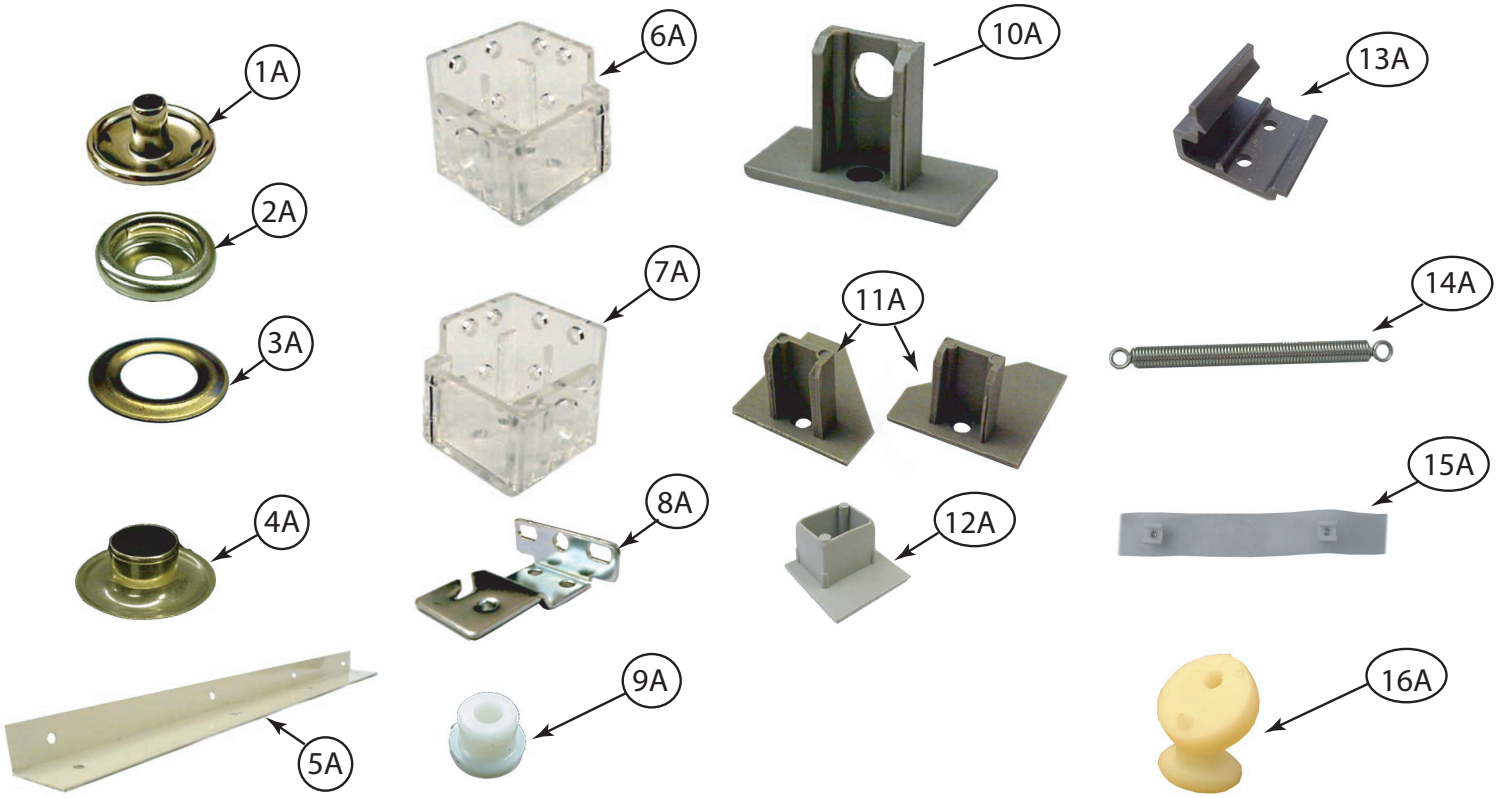

KEY	PART NUMBER	U/M	DESCRIPTION
1A	029155-01-000	EA	CAP - SNAP - 5/32" OUTSIDE DIAMETER OF PIN
2A	029156-01-000	EA	SOCKET - SNAP - 9/16" O.D.
3A	046867-05-000	EA	WASHER - #0
4A	046867-04-000	EA	GROMMET - #0
5A	160457-01-01A	EA	BRACE - VALANCE - L-SHAPED - 20" - OFF WHITE
6A	162496-01-01A	EA	BRACKET/BLIND - LEFT SIDE WHEN FACING WINDOW - CLEAR
7A	162496-02-01A	EA	BRACKET/BLIND - RIGHT SIDE WHEN FACING WINDOW - CLEAR
8A	084434-01-000	EA	BRACKET - MOUNTING - ROLLER SHADE - 1 3/8"
9A	094896-02-000	EA	GROMMET - CORD/PLEATED BLIND - NYLON - GRAY
10A	094907-02-000	EA	END CAP - PLEATED BLIND/TOP - RH/LH - GRAY PLASTIC
11A	094907-04-000	EA	END CAP - PLEATED BLIND/BOTTOM - RH/LH
12A	094907-09-000	EA	END CAP/BLIND - CENTER RAIL - RH/LH
13A	097565-01-000	EA	BRACKET - MOUNTING - PLEATED BLIND
14A	155748-01-000	EA	SPRING - EXTENSION - DAY/NIGHTER BLIND
15A	101031-01-000	YD	TAPE/GLIDE - 4.25" SPACING
16A	169068-01-01A	EA	BRACKET - (CLEAT TYPE) - F/BLIND HOLDOWN - MILKY WHITE

COPYRIGHT © 2009 WINNEBAGO INDUSTRIES INC.

CURTAIN & CUSHION GROUP (CONTINUED)

HARDWARE (CONTINUED)

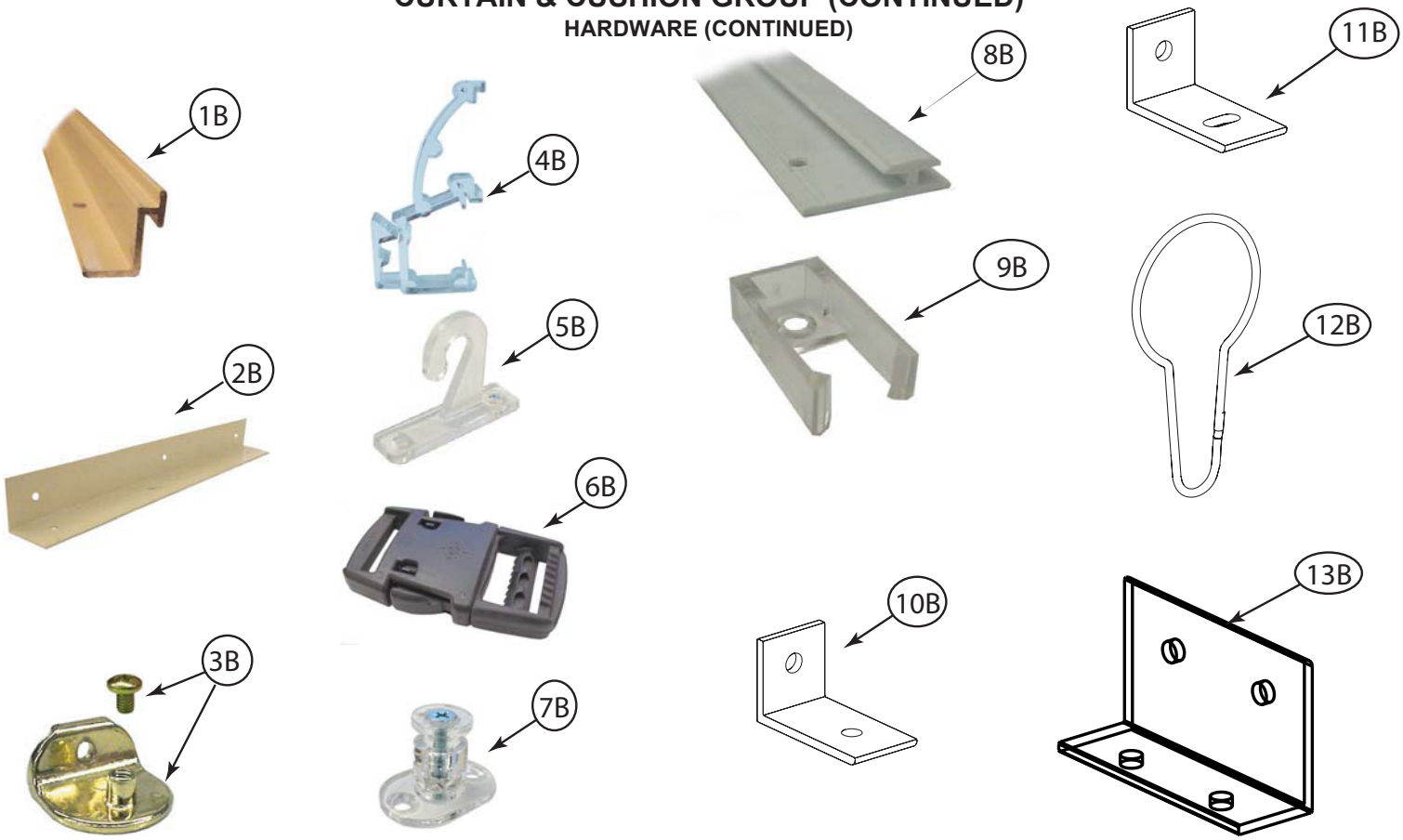

KEY	PART NUMBER	U/M	DESCRIPTION
1B	105450-14-01A	EA	TRACK - CURTAIN - 90" - OFF WHITE
2B	105648-01-02A	EA	BRACE - VALANCE - 14" - OFF WHITE
2B	105648-02-02A	EA	BRACE - VALANCE - 8.5" - OFF WHITE
3B	106544-01-000	EA	PULL - SHADE/BRASS
3B	106544-01-001	EA	SCREW - SHADE/BRASS
3B	106544-02-000	EA	PULL-SHADE - NICKEL
4B	109353-04-000	EA	CLIP - VALANCE SLAT MOUNTING - CLEAR PLASTIC
5B	109441-01-000	EA	BRACKET/HOOK - BLIND HOLD DOWN - LARGE - CLEAR
	109441-02-000	EA	SPACER/BRACKET - BLIND HOLD DOWN
6B	129491-01-000	EA	CATCH - SNAP HOOK - 1"
7B	141634-01-000	EA	BRACKET-(BOBBIN TYPE) 7/8"H HOLDUPBASE(OVAL)-2 HOLE-CLEAR
8B	156172-02-01A	EA	TRACK/WALL - 32" - BONE
8B	156172-03-01A	EA	TRACK/WALL - 21" - BONE
9B	156172-04-01A	EA	END CAP - WALL TRACK - CLEAR
10B	154316-01-01A	EA	BRACE/ANGLE - W/HOLE - CASHMERE
11B	154316-02-01A	EA	BRACE/ANGLE - W/SLOT - CASHMERE
12B	159702-01-01A	EA	HOOK/RING - CURTAIN/SHOWER - NICKEL
13B	156732-01-02A	EA	BRACE - ANGLE - 2.5" - OFF WHITE

ACCESSORIES

KEY	PART NUMBER	U/M	DESCRIPTION
	070578-19-Y37	EA	BUTTON - #30 - SCREW/STUD - FABRIC COVERED (Y37, Y38)
	070578-19-Y11	EA	BUTTON - #30 - SCREW/STUD - FABRIC COVERED (Y39, Y40)
	070578-19-Y41	EA	BUTTON - #30 - SCREW/STUD - FABRIC COVERED (Y41, Y42)

CURTAIN & CUSHION GROUP (CONTINUED)

FABRICS

Y37, Y38

142523-20-000	FABRIC-UPHL,ULTRALEATHER, MAIN
142523-20-000	FABRIC-EURO CHAIR LIDS
142523-30-000	FABRIC-SOFA BASE WRAP “B”
148797-FY-000	FABRIC-TRANS PANELS, ACCENT
148797-FY-000	FABRIC-SOFA BASE WRAP “A”
148797-FY-000	FABRIC-UPHOLSTERY MAIN ONE, MAIN
148797-FY-000	FABRIC-HEADLINER/PADS/BUNKS, TRANS PANELS
148797-GB-000	FABRIC-O/H CABT,DIN/LOUNGE
148797-GB-000	FABRIC-DINETTE WRAP, DINETTES
148797-GB-000	FABRIC-UPHLSTRY,PLAIN ACCENT
148797-GD-000	FABRIC-UPHOLSTERY ACCENT, PATTERN
156773-C9-000	FABRIC-UPHOLSTERY,BEDSPREAD, MAIN
156773-D1-000	FABRIC-DRAPERY, MAIN
156773-D1-000	FABRIC-UPHOLSTERY,BEDSPREAD, PATTERN ACCENT A
113979-10-02A	CARPET-HEADLINER - SLDOUT (SY) - CEILING
113979-11-02A	CARPET-HEADLINER - SLDOUT (SY) - CEILING

Y39, Y40

142523-20-000	FABRIC-UPHL,ULTRALEATHER, MAIN
142523-20-000	FABRIC-EURO CHAIR LIDS
142523-30-000	FABRIC-SOFA BASE WRAP “B”
148797-FY-000	FABRIC-UPHOLSTERY MAIN ONE, MAIN
148797-FY-000	FABRIC-TRANS PANELS, ACCENT
148797-FY-000	FABRIC-SOFA BASE WRAP “A”
148797-FY-000	FABRIC-HEADLINER/PADS/BUNKS, TRANS PANELS
148797-GB-000	FABRIC-O/H CABT,DIN/LOUNGE
148797-GB-000	FABRIC-DINETTE WRAP, DINETTES
148797-GB-000	FABRIC-UPHLSTRY,PLAIN ACCENT
148797-GD-000	FABRIC-UPHOLSTERY ACCENT, PATTERN
156773-C9-000	FABRIC-UPHOLSTERY,BEDSPREAD, MAIN
156773-D1-000	FABRIC-DRAPERY, MAIN
156773-D1-000	FABRIC-UPHOLSTERY,BEDSPREAD , PATTERN ACCENT
113979-10-02A	CARPET-HEADLINER - SLDOUT (SY) - CEILING
113979-11-02A	CARPET-HEADLINER - SLDOUT (SY) - CEILING

Y41, Y42

142523-23-000	FABRIC-UPHL,ULTRALEATHER, MAIN
142523-23-000	FABRIC-SOFA BASE WRAP “B”
142523-23-000	FABRIC-EURO CHAIR LIDS
148797-GA-000	FABRIC-SOFA BASE WRAP “A”
148797-GA-000	FABRIC-DINETTE WRAP, DINETTES
148797-GA-000	FABRIC-UPHOLSTERY MAIN ONE, MAIN
148797-GC-000	FABRIC-UPHLSTRY,PLAIN ACCENT
148797-GC-000	FABRIC-HEADLINER/PADS/BUNKS, TRANS PANELS
148797-GC-000	FABRIC-O/H CABT,DIN/LOUNGE
148797-GC-000	FABRIC-TRANS PANELS, ACCENT
148797-GE-000	FABRIC-UPHOLSTERY ACCENT, PATTERN
156773-D0-000	FABRIC-DRAPERY, MAIN
156773-D0-000	FABRIC-UPHOLSTERY,BEDSPREAD, MAIN
156773-D2-000	FABRIC-UPHOLSTERY,BEDSPREAD, PATTERN ACCENT
113979-10-02A	CARPET-HEADLINER - SLDOUT (SY) - CEILING
113979-11-02A	CARPET-HEADLINER - SLDOUT (SY) - CEILING

COPYRIGHT © 2009 WINNEBAGO INDUSTRIES INC.

DRIVERS COMPARTMENT GROUP

FRONT INTERIOR

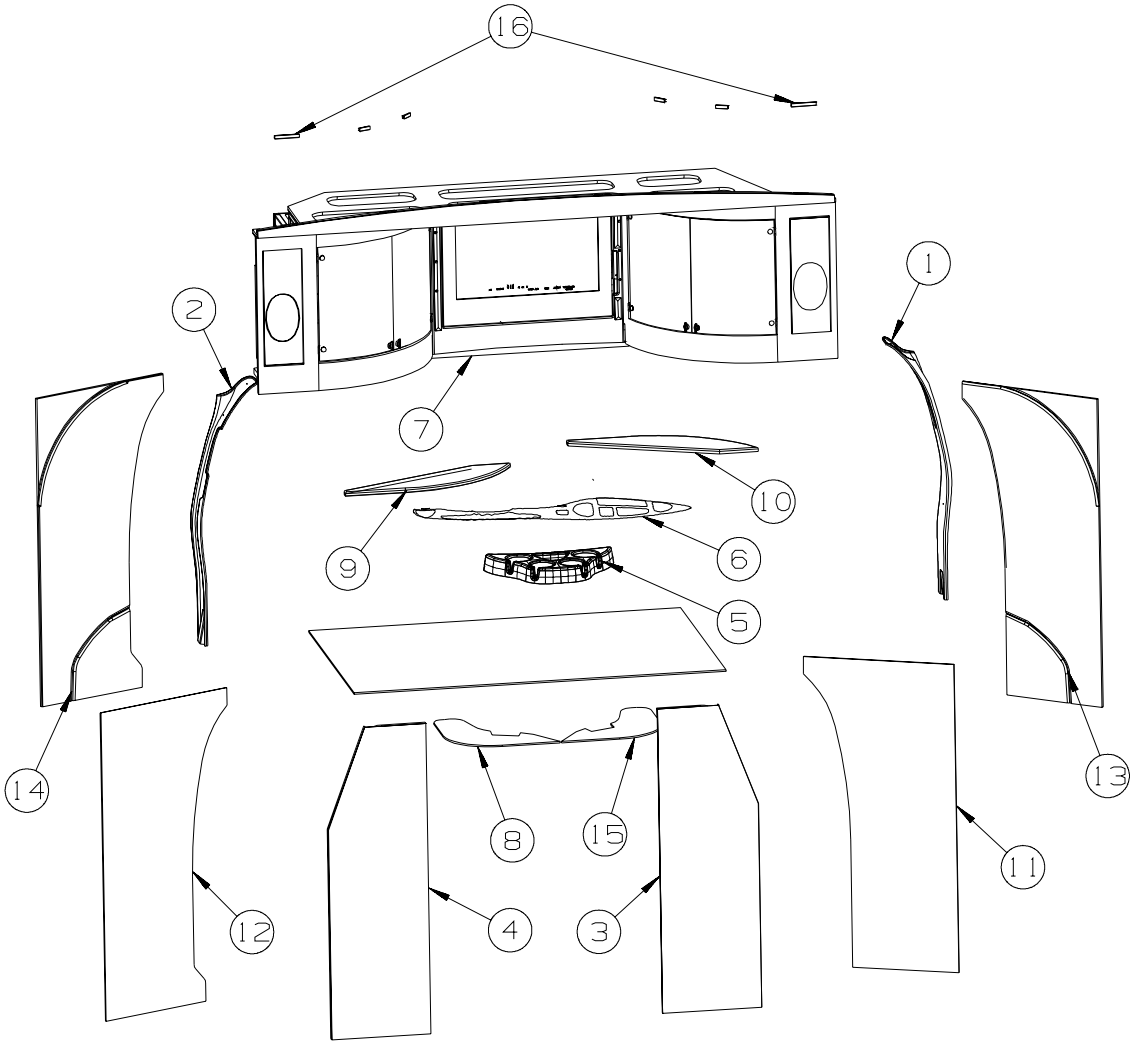

KEY	PART NUMBER	U/M	DESCRIPTION
1	150481-01-23A	EA	TRIM - B-PILLAR - RIGHT HAND - PEBBLE
2	150481-02-23A	EA	TRIM - B-PILLAR - LEFT HAND - PEBBLE
3	166647-03-Y37	EA	TRIM - B-PILLAR - RIGHT HAND (Y37, Y38)
3	166647-03-Y39	EA	TRIM - B-PILLAR - RIGHT HAND (Y39, Y40)
3	166647-03-Y41	EA	TRIM - B-PILLAR - RIGHT HAND (Y41, Y42)
4	166647-04-Y37	EA	TRIM - B-PILLAR - RIGHT HAND (Y37, Y38)
4	166647-04-Y39	EA	TRIM - B-PILLAR - RIGHT HAND (Y39, Y40)
4	166647-04-Y41	EA	TRIM - B-PILLAR - RIGHT HAND (Y41, Y42)
5	150974-01-04A	EA	APPLIQUE - BEZEL - INSTRUMENT PANEL - LEATHER LASER WAVE
6	150974-05-04A	EA	APPLIQUE - BEZEL - MOTOR COVER - FORD - LEATHER LASER WAVE
7	149948-01-02A	EA	HEADLINER - WITH DOME LIGHT - FORD - PEBBLE
8	135426-01-000	EA	INSULATION - FLOOR - CAB - LH
9	166670-03-Y37	EA	TRIM - ENTERTAINMENT CENTER - BOTTOM (Y37, Y38)
9	166670-03-Y39	EA	TRIM - ENTERTAINMENT CENTER - BOTTOM (Y39, Y40)
9	166670-03-Y41	EA	TRIM - ENTERTAINMENT CENTER - BOTTOM (Y41, Y42)
10	166670-04-Y37	EA	TRIM - ENTERTAINMENT CENTER - BOTTOM (Y37, Y38)
10	166670-04-Y39	EA	TRIM - ENTERTAINMENT CENTER - BOTTOM (Y39, Y40)
10	166670-04-Y41	EA	TRIM - ENTERTAINMENT CENTER - BOTTOM (Y41, Y42)
11	166648-03-Y37	EA	PANEL/TRANSITION - INNER - RIGHT HAND (Y37, Y38)
11	166648-03-Y39	EA	PANEL/TRANSITION - INNER - RIGHT HAND (Y39, Y40)
11	166648-03-Y41	EA	PANEL/TRANSITION - INNER - RIGHT HAND (Y41, Y42)
12	166648-04-Y37	EA	PANEL/TRANSITION - INNER - LEFT HAND (Y37, Y38)
12	166648-04-Y39	EA	PANEL/TRANSITION - INNER - LEFT HAND (Y39, Y40)
12	166648-04-Y41	EA	PANEL/TRANSITION - INNER - LEFT HAND (Y41, Y42)
13	166648-05-Y37	EA	PANEL/TRANSITION - INNER - RIGHT HAND (Y37, Y38) - 086
13	166648-05-Y39	EA	PANEL/TRANSITION - INNER - RIGHT HAND (Y39, Y40) - 086
13	166648-05-Y41	EA	PANEL/TRANSITION - INNER - RIGHT HAND (Y41, Y42) - 086

COPYRIGHT © 2009 WINNEBAGO INDUSTRIES INC.

DRIVERS COMPARTMENT GROUP (CONTINUED)

FRONT INTERIOR (CONTINUED)

KEY	PART NUMBER	U/M	DESCRIPTION
14	166648-06-Y37	EA	PANEL/TRANSITION - INNER - LEFT HAND (Y37, Y38) - 086
14	166648-06-Y39	EA	PANEL/TRANSITION - INNER - LEFT HAND (Y39, Y40) - 086
14	166648-06-Y41	EA	PANEL/TRANSITION - INNER - LEFT HAND (Y41, Y42) - 086
	070578-19-Y37	EA	BUTTON - #30 - SCREW/STUD - FABRIC COVERED (Y37, Y38)
	070578-19-Y11	EA	BUTTON - #30 - SCREW/STUD - FABRIC COVERED (Y39, Y40)
	070578-19-Y41	EA	BUTTON - #30 - SCREW/STUD - FABRIC COVERED (Y41, Y42)
15	135426-02-000	EA	INSULATION - FLOOR - CAB - RH
16	146514-04-000	EA	CHANNEL/MOUNT - F/ROPE LIGHT - 086
	164519-04-02A	EA	BLIND/PLEATED - WINDSHIELD/PRIVACY - BEIGE - 28D
	164519-05-02A	EA	BLIND/PLEATED - CAB/SIDE WINDOWS/PRIVACY - RH & LH - BEIGE - 28D
	164519-06-02A	EA	SUPPORT/ROD - BLINDS/PRIVACY - FORD - BEIGE - 28D

COPYRIGHT © 2009 WINNEBAGO INDUSTRIES INC.

DRIVERS COMPARTMENT GROUP (CONTINUED)

CABINETS

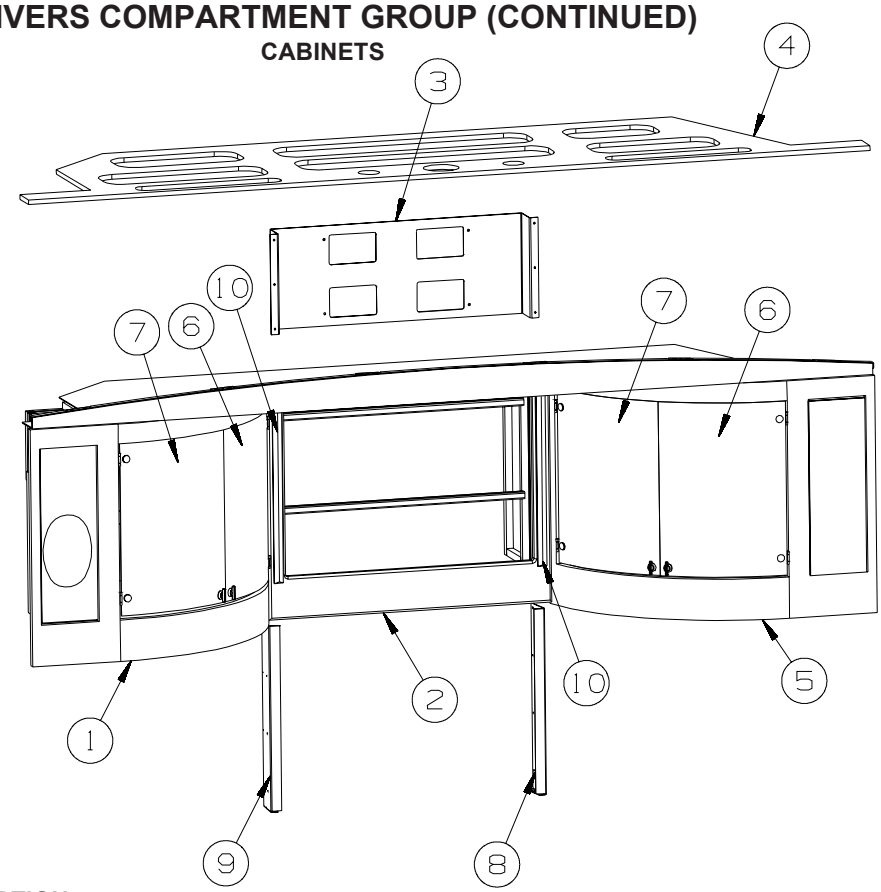

KEY	PART NUMBER	U/M	DESCRIPTION
1	166216-04-Y37	EA	CABINET - OVERHEAD/FRONT/LH HAND - W/O DRS/HDW - HONEY CHERRY - 48Q
1	166216-04-Y38	EA	CABINET - OVERHEAD/FRONT/LH HAND - W/O DRS/HDW - BELMONT MAPLE - 48Q
1	166216-02-Y37	EA	CABINET - OVERHEAD/FRONT/LH HAND - W/O DRS/HDW - HONEY CHERRY - 48R
1	166216-02-Y38	EA	CABINET - OVERHEAD/FRONT/LH HAND-W/O DRS/HDW - BELMONT MAPLE - 48R
2	149407-08-Y37	EA	FRAME/FACE - F/TV - HONEY CHERRY
			FROM: 00-00-00 THRU: 11-30-08
2	149407-09-Y37	EA	FRAME/FACE - F/TV - HONEY CHERRY
			FROM: 12-01-08 THRU: 99-99-99
2	149407-08-Y38	EA	FRAME/FACE - F/TV - BELMONT MAPLE
			FROM: 00-00-00 THRU: 11-30-08
2	149407-09-Y38	EA	FRAME/FACE - F/TV - BELMONT MAPLE
			FROM: 12-01-08 THRU: 99-99-99
3	166678-01-02B	EA	BRACKET - TV - 26" JENSEN - E-COATED
4	106569-15-01A	EA	VINYL - LAMINATE - 1/4" X 54" - SPINDRIFT/SEA OYSTER
5	166216-05-Y37	EA	CABINET - OVERHEAD/FRONT/RH HAND - W/O DOORS/HDW - HONEY CHERRY
5	166216-05-Y38	EA	CABINET - OVERHEAD/FRONT/RH HAND - W/O DOORS/HDW - BELMONT MAPLE
5	166216-07-Y37	EA	CABINET - OVERHEAD/FRONT/RH HAND - W/O DOORS/HDW - HONEY CHERRY - 70C
5	166216-07-Y38	EA	CABINET - OVERHEAD/FRONT/RH HAND - W/O DOORS/HDW - BELMONT MAPLE - 70C
6	167290-01-01A	EA	DOOR - GLASS/CURVED - RH HAND - W/O HDW - SMOKED
7	167290-02-01A	EA	DOOR - GLASS/CURVED - LH HAND - W/O HDW - SMOKED
8	166283-01-02B	EA	PANEL - SUPPORT - TV
9	166283-02-02B	EA	PANEL - SUPPORT - TV
10	M09477-88-Y37	EA	MOLDING - TRIM/VEE - .2" X 1" X 19.9" - HONEY CHERRY
10	M09477-88-Y38	EA	MOLDING - TRIM/VEE - .2" X 1" X 19.9" - BELMONT MAPLE
	M09565-86-WD3	EA	MOLDING - TRIM/VEE - .2" X 1" X 8.5" - HONEY CHERRY
			FROM: 00-00-00 THRU: 12-03-08
	M09565-86-Y38	EA	MOLDING - TRIM/VEE - .2" X 1" X 8.5" - BELMONT MAPLE
			FROM: 00-00-00 THRU: 12-03-08
	M09454-62-RE0	EA	MOLDING - TRIM/VEE - .2" X 1" X 3.5" - HONEY CHERRY
			FROM: 00-00-00 THRU: 12-03-08
	M09454-62-YK2	EA	MOLDING - TRIM/VEE - .2" X 1" X 3.5" - BELMONT MAPLE
			FROM: 00-00-00 THRU: 12-03-08

COPYRIGHT © 2009 WINNEBAGO INDUSTRIES INC.

ELECTRICAL GROUP

110V BODY WIRING

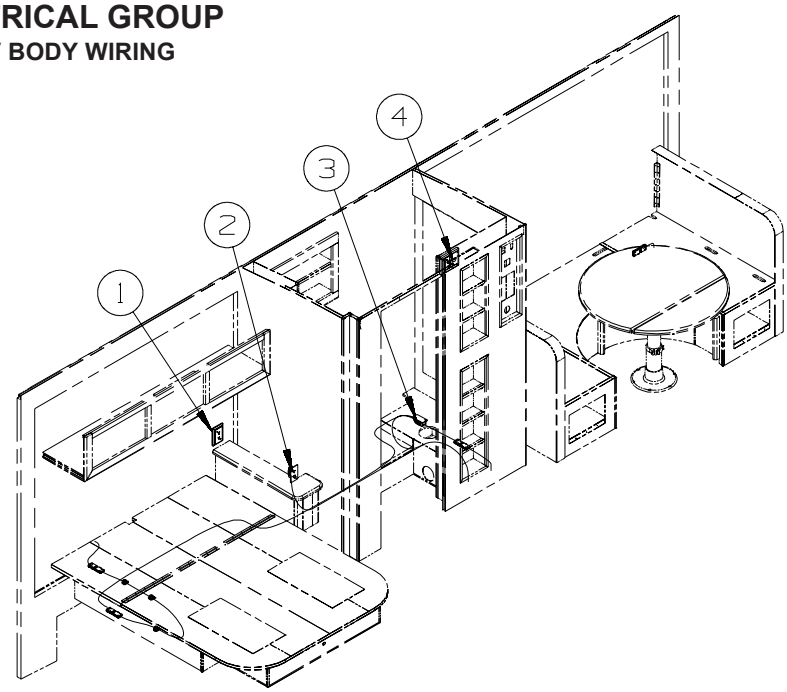

KEY	PART NUMBER	U/M	DESCRIPTION
1	058708-01-000	EA	RECEPTACLE - ELECTRIC - DOUBLE - BROWN
1	133713-01-23A	EA	SPACER/RECEPTACLE - VINYL - HONEY CHERRY
1	133713-01-26A	EA	SPACER/RECEPTACLE - VINYL - BELMONT MAPLE
2	058708-01-000	EA	RECEPTACLE - ELECTRIC - DOUBLE - BROWN
3	058707-02-000	EA	RECEPTACLE - BLANK - JUNCTION BOX
4	058708-01-000	EA	RECEPTACLE - ELECTRIC - DOUBLE - BROWN
4	133713-04-23A	EA	SPACER/RECEPTACLE - VINYL - HONEY CHERRY
4	133713-04-26A	EA	SPACER/RECEPTACLE - VINYL - BELMONT MAPLE

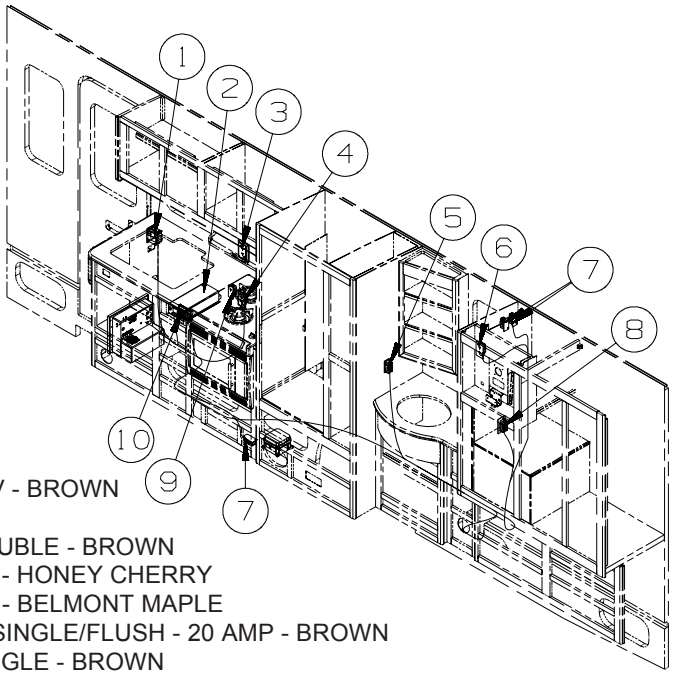

KEY	PART NUMBER	U/M	DESCRIPTION
1	163319-01-02A	EA	RECEPTACLE - GFCI - 15A 125V - BROWN
2	099048-04-000	EA	INVERTER - 300 WATT - 40B
3	058708-01-000	EA	RECEPTACLE - ELECTRIC - DOUBLE - BROWN
3	133713-01-23A	EA	SPACER/RECEPTACLE - VINYL - HONEY CHERRY
3	133713-01-26A	EA	SPACER/RECEPTACLE - VINYL - BELMONT MAPLE
4	160984-01-01A	EA	RECEPTACLE - ELECTRICAL - SINGLE/FLUSH - 20 AMP - BROWN
5	058707-01-000	EA	RECEPTACLE - ELECTRIC - SINGLE - BROWN
6	058708-05-000	EA	RECEPTACLE - ELECTRICAL - SINGLE - BROWN
7	058707-02-000	EA	RECEPTACLE - BLANK - JUNCTION BOX
8	058708-01-000	EA	RECEPTACLE - ELECTRIC - DOUBLE - BROWN
9	058707-02-000	EA	RECEPTACLE - BLANK - JUNCTION BOX
9	058707-01-000	EA	RECEPTACLE - ELECTRIC - SINGLE - BROWN - 40B
10	131826-01-01A	EA	RECEPTACLE - EXTERIOR - W/COVER/GASKET - WHITE

COPYRIGHT © 2009 WINNEBAGO INDUSTRIES INC.

ELECTRICAL GROUP (CONTINUED)

12V BODY WIRING

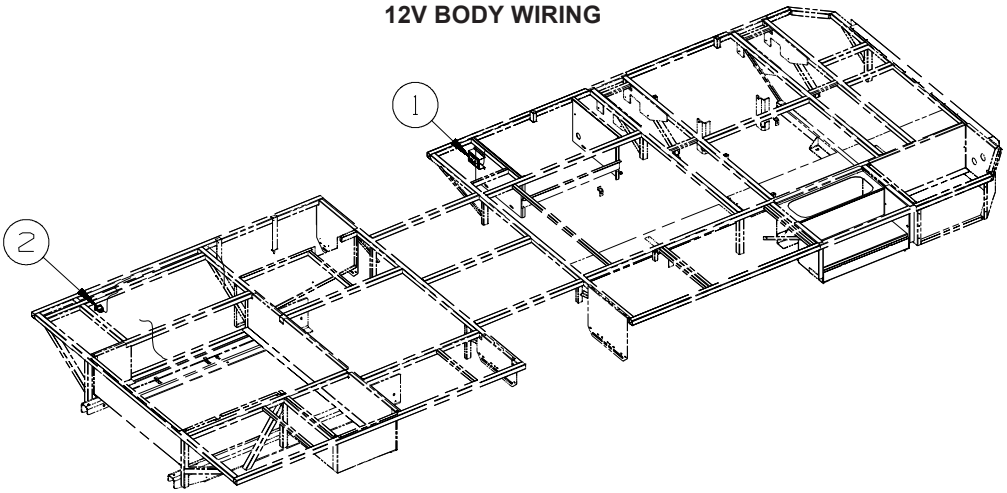

KEY	PART NUMBER	U/M	DESCRIPTION
1	149557-03-01A	EA	PLATE/WALL - DUAL COAXIAL/HORIZONTAL - WHITE
2	108357-15-000	EA	SWITCH - ROCKER - DPDT - ON/NONE/ON - W/LIGHT W/O COVER - 64R
2	108356-04-01A	EA	COVER/ACTUATOR SWITCH - 2 ROWS DIMPLES W/LENS - BLACK - 64R
2	108355-01-000	EA	HOUSING - SWITCH - 64R

COPYRIGHT © 2009 WINNEBAGO INDUSTRIES INC.

ELECTRICAL GROUP (CONTINUED)

12V BODY WIRING (CONTINUED)

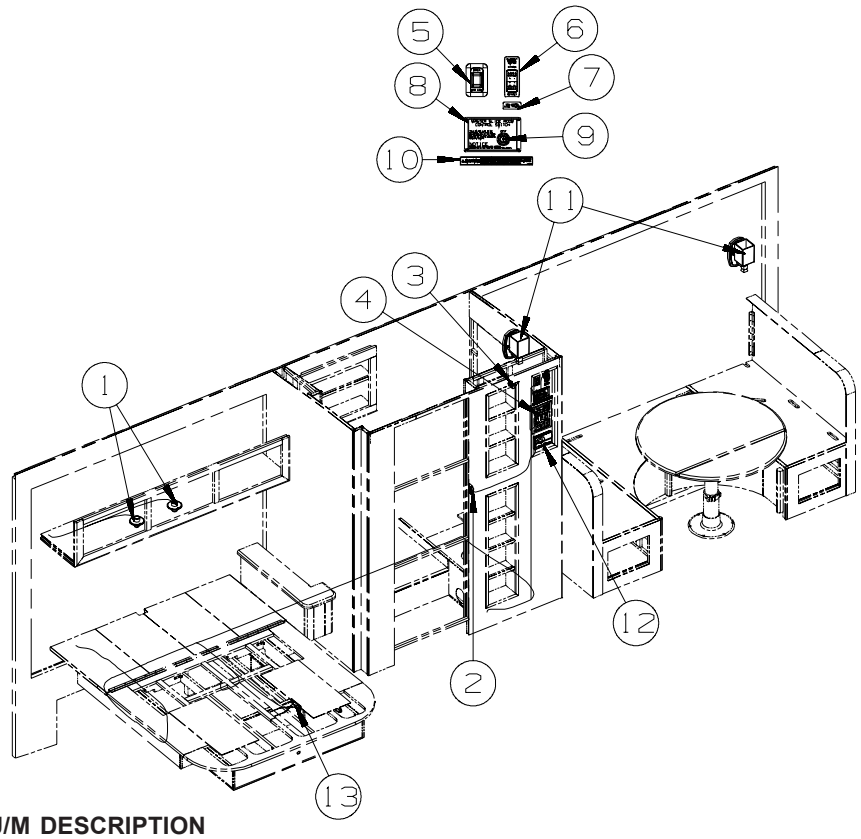

KEY	PART NUMBER	U/M	DESCRIPTION
1	132427-01-02A	EA	LIGHT - READING/SWIVEL - ROUND - NICKEL
2	135740-01-01A	EA	SWITCH - ROCKER - SPST - ON/OFF - BROWN
2	135741-01-01A	EA	SWITCH - BASE - SINGLE - BROWN
2	135742-07-02A	EA	BEZEL - SWITCH - CEILING - BROWN
3	132958-01-000	EA	RECEPTACLE - 12 VOLT - MOUNTING FLANGE - BLACK
4*	134940-06-01A	EA	PANEL - MONITOR - 2 TANK - W/GENERATOR SWITCH - 40N
4*	134940-07-01A	EA	PANEL - MONITOR - 2 TANK
5	135740-06-01A	EA	SWITCH - ROCKER - ON/OFF - LIGHTED - RED - 53B
5	135741-01-01A	EA	SWITCH - BASE - SINGLE - BROWN - 53B
5	135742-35-02A	EA	BEZEL - SWITCH - WATER HEATER/110 VOLT - BROWN - 53B
6	144363-09-02B	EA	PLATE - SWITCH - E-COATED
6	108357-06-000	EA	SWITCH - ROCKER - DPDT - MOM/OFF/MOM - 6 TERM - W/O COVER
6	108356-02-01A	EA	COVER/ACTUATOR SWITCH - 2 ROWS DIMPLES - BLACK
6	108355-01-000	EA	HOUSING - SWITCH
6	116220-01-000	EA	APPLIQUE - SWITCH/SLIDEOUT
7	163992-01-01A	EA	LABEL - SLIDEOUT - DRIVER/FRONT - BLACK/WHITE
8	163988-01-01A	EA	LABEL - SLIDEOUT CONTROL/MANUAL - BLACK/WHITE
9*	163097-01-000	EA	SWITCH - SPST - KEY ACTIVATED - W/2 KEYS
10	116549-01-000	EA	LABEL - WARNING - SLIDEOUT
11	119258-63-01A	EA	LAMP - WALL - W/O SHADE/BULBS - UL/CSA - SATIN NICKEL - 22B
11	119257-30-01A	EA	SHADE - LAMP - SQUARE - PARCHMENT - 22B
11	117805-02-000	EA	BULB - 12V - #921 - 1.4 AMPS - 22B
12	135618-03-01A	EA	THERMOSTAT - ROOF A/C & FURNACE - WHITE FROM: 00-00-00 THRU: 05-10-09
12	135618-03-02A	EA	THERMOSTAT - ROOF A/C & FURNACE - BLACK FROM: 05-11-09 THRU: 99-99-99
12	135618-01-01A	EA	THERMOSTAT - HEAT PUMP/FURNACE - WHITE - 29P FROM: 00-00-00 THRU: 05-10-09
12	135618-01-02A	EA	THERMOSTAT - HEAT PUMP/FURNACE - BLACK - 29P FROM: 05-11-09 THRU: 99-99-99
13	061424-01-000	EA	LIGHT - AISLE - 12 VOLT - RECTANGULAR

***COMPONENT PARTS LISTED LATER IN THIS GROUP**

COPYRIGHT © 2009 WINNEBAGO INDUSTRIES INC.

ELECTRICAL GROUP (CONTINUED)

12V BODY WIRING (CONTINUED)

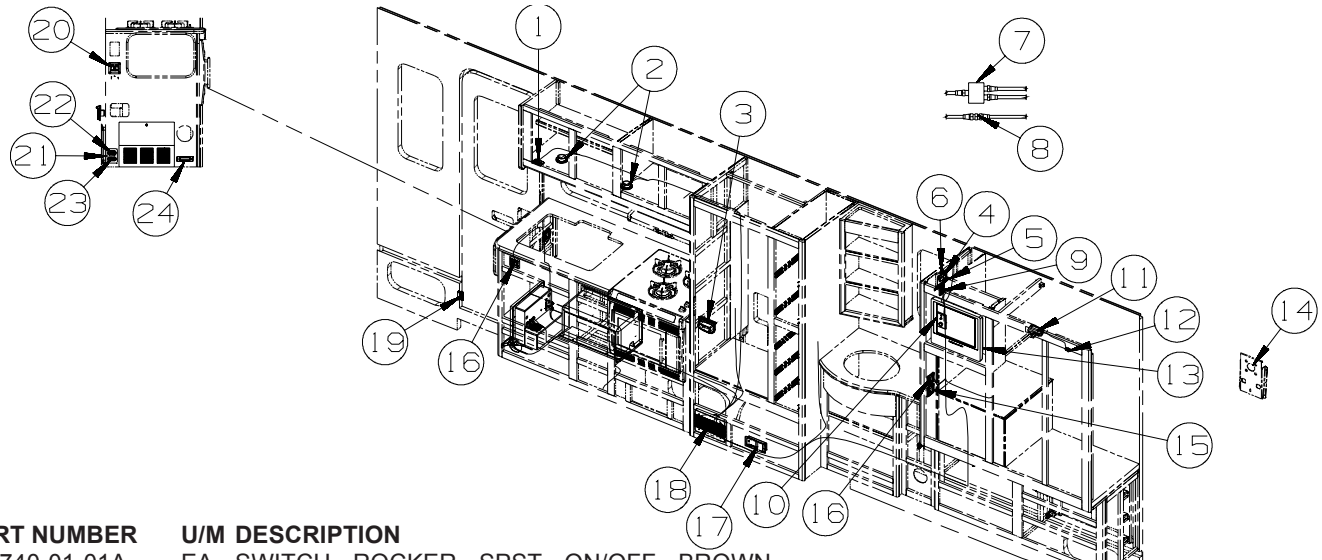

KEY	PART NUMBER	U/M	DESCRIPTION
1	135740-01-01A	EA	SWITCH - ROCKER - SPST - ON/OFF - BROWN
1	135741-01-01A	EA	SWITCH - BASE - SINGLE - BROWN
1	135742-01-01A	EA	BEZEL - SWITCH - SINGLE - BROWN
2*	165170-01-01A	EA	LIGHT - HALOGEN - ROUND/GLASS LENS - 10 WATT
3	168516-01-01A	EA	RECEPTACLE/OUTLET - COAX/12V - EXTERIOR - WHITE - 1LY
4	138173-04-000	EA	CONTROL PANEL (TOUCH PAD) - ELECTRIC SLIDEOUT - #1802931
5	116549-01-000	EA	LABEL - WARNING - SLIDEOUT
6	163992-02-01A	EA	LABEL - SLIDEOUT - DRIVER/REAR - BLACK/WHITE
7	086756-01-000	EA	SPLITTER - TV/2 WAY
8	082134-01-000	EA	ADAPTER - TV - CABLE TO CABLE
9	135740-01-01A	EA	SWITCH - ROCKER - SPST - ON/OFF - BROWN - 1LY
9	135741-01-01A	EA	SWITCH - BASE - SINGLE - BROWN - 1LY
9	135742-45-02A	EA	BEZEL - SWITCH - TV - BROWN - 1LY
10	076319-09-000	EA	WALLPLATE - TV CABLE RECEPTACLE - SINGLE - BROWN
11*	087694-01-000	EA	LIGHT - WARDROBE/CLOSET - W/SWITCH
12	056264-01-000	EA	SWITCH - LEAF ACTUATOR
13*	165808-01-000	EA	TV - 15" LCD/STEREO - 12V - MB QUART #MBQLC15U-W - 1LY
14	162934-04-02B	EA	SUPPORT/MOUNTING - TV - E-COATED - 1LY
15	135740-01-01A	EA	SWITCH - ROCKER - SPST - ON/OFF - BROWN
15	135741-02-01A	EA	SWITCH - BASE - DOUBLE - BROWN
15	135742-13-02A	EA	BEZEL - SWITCH - CEILING/AISLE - BROWN
16	135740-01-01A	EA	SWITCH - ROCKER - SPST - ON/OFF - BROWN
16	135740-02-01A	EA	SWITCH - ROCKER - SPDT - ON/ON - BROWN
16	135741-02-01A	EA	SWITCH - BASE - DOUBLE - BROWN
16	135742-16-02A	EA	BEZEL - SWITCH - CEILING/HALL - BROWN
17	150138-03-02A	EA	DETECTOR - LP GAS - BROWN
18	124884-01-000	EA	SPEAKER - 6" X 9" - SUB-WOOFER - W/O GRILLE
18	151844-01-01A	EA	GRILLE - SPEAKER - 6" X 9" - SUB WOOFER - BLACK
19	116995-02-000	EA	SWITCH/MAGNET - ELECTRIC STEP - BLACK/WHITE- NORMALLY OPEN - 1E2
20	135740-01-01A	EA	SWITCH - ROCKER - SPST - ON/OFF - BROWN
20	135741-02-01A	EA	SWITCH - BASE - DOUBLE - BROWN
20	135742-19-02A	EA	BEZEL - SWITCH - CEILING/PORCH - BROWN
21	098351-22-02A	EA	PLATE/SWITCH - 2 GANG - CHROME
22	108357-19-000	EA	SWITCH - ROCKER - SPST - ON/STEP/OFF - W/COVER/LABEL - 1E2
22	096241-03-000	EA	SWITCH - BLANK - BLACK
22	108355-01-000	EA	HOUSING - SWITCH
23	108357-17-000	EA	SWITCH - ROCKER - DPDT - MOM/OFF/MOM - W/LIGHT - W/O COVER
23	108356-19-01A	EA	COVER/ACTUATOR SWITCH - 3 GROOVES-COACH BATT DISC - BLK
23	108355-01-000	EA	HOUSING - SWITCH
24	061424-01-000	EA	LIGHT - AISLE - 12 VOLT - RECTANGULAR

***COMPONENT PARTS LISTED LATER IN THIS GROUP**

COPYRIGHT © 2009 WINNEBAGO INDUSTRIES INC.

ELECTRICAL GROUP (CONTINUED)

12V BODY WIRING (CONTINUED)

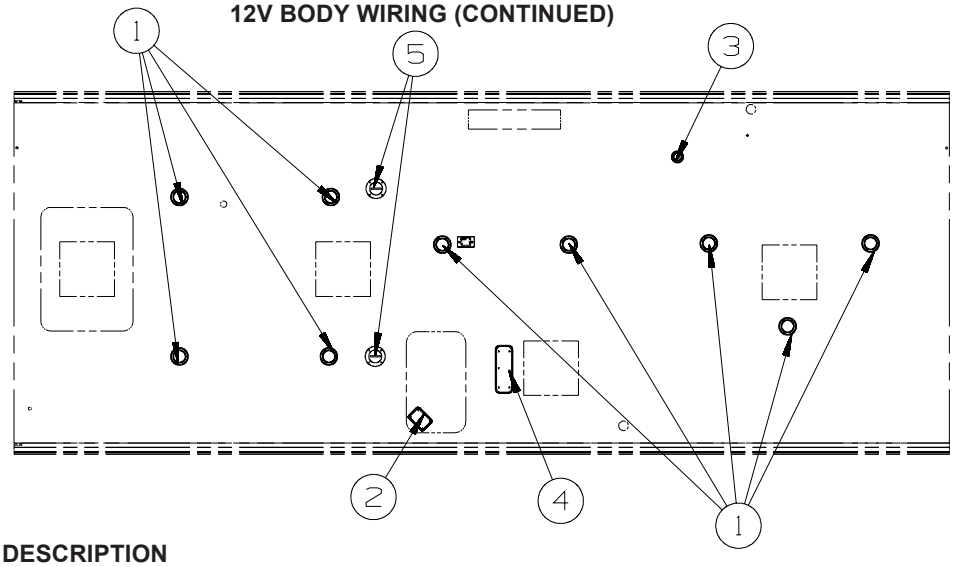

KEY	PART NUMBER	U/M	DESCRIPTION
1	165643-01-01A	EA	LIGHT - HALOGEN - 4.5" ROUND/GLASS LENS - 20 WATT
2*	121935-01-01A	EA	LIGHT - DOME - SHOWER - W/HOLE IN LENS
3*	165170-01-01A	EA	LIGHT - HALOGEN - ROUND/GLASS LENS - 10 WATT
4*	137417-06-01A	EA	LIGHT - DOME - DOUBLE - W/O SWITCH - W/FROSTED LENS-WHITE
5	160867-01-01A	EA	SPEAKER - ROUND/CEILING - CREAM - MAGNADYNE - LS3EYC-WN

***COMPONENT PARTS LISTED LATER IN THIS GROUP**

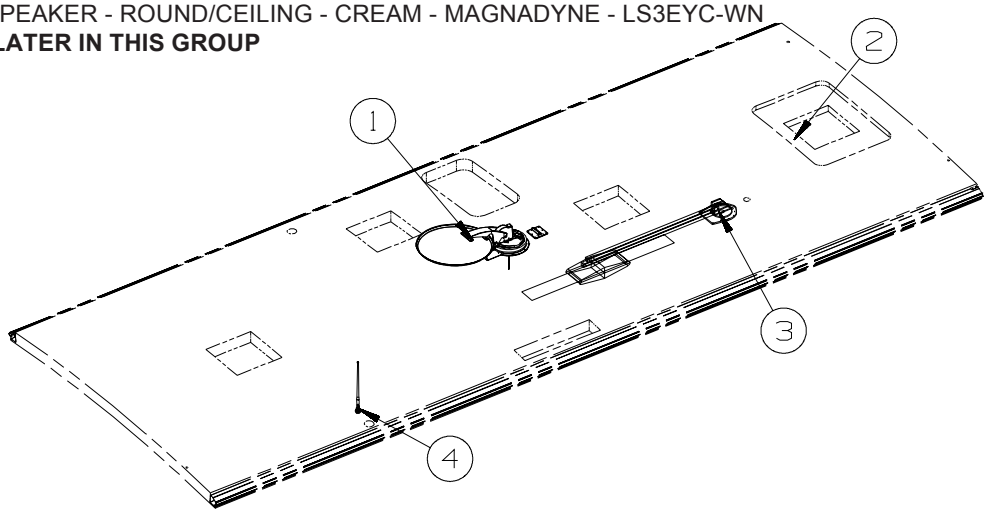

KEY	PART NUMBER	U/M	DESCRIPTION
1*	137135-05-000	EA	ANTENNA - SATELLITE DSS - W/SENSOR - 48Q
2*	154474-04-01A	EA	ANTENNA/SATELLITE - DISH IN DOME/SEARCH IN MOTION - WHITE - 48R
2*	154474-04-02A	EA	ANTENNA/SATELLITE - DISH IN DOME/SEARCH IN MOTION - BLACK - 48R
2	154474-02-000	EA	CONTROL/SATELLITE KIT - IDB BOX/IDD BOX-POWER SUPPLY-CABLE - 48R
2	154474-03-000	EA	CABLE - SATELLITE - COAX - 8' W/CONNECTORS - 48R
2	154474-05-000	EA	CABLE - SATELLITE - COAX - 16' W/CONNECTORS - 48R
2	146488-01-000	EA	PLATE - ROOF - CABLE ENTRY - 48R
3*	076319-23-000	EA	ANTENNA - TV ROOF MOUNT - 44.5" MAST
3*	076319-25-000	EA	KIT - HARDWARE INTERIOR
3	069726-02-000	EA	BUMPER - .88" OD X .40" THICK - BLACK
4	090944-01-000	EA	ANTENNA - RADIO - 16" RUBBER - W/72" LEAD WIRE - 1D5
4	109889-04-000	EA	EXTENDER - ANTENNA SHAFT - 3.7" - 1D5
4	147741-01-09B	EA	BRACKET - ANTENNA GROUND - GALVANIZED - 1D5

***COMPONENT PARTS LISTED LATER IN THIS GROUP**

COPYRIGHT © 2009 WINNEBAGO INDUSTRIES INC.

ELECTRICAL GROUP (CONTINUED)
12V BODY WIRING (CONTINUED)

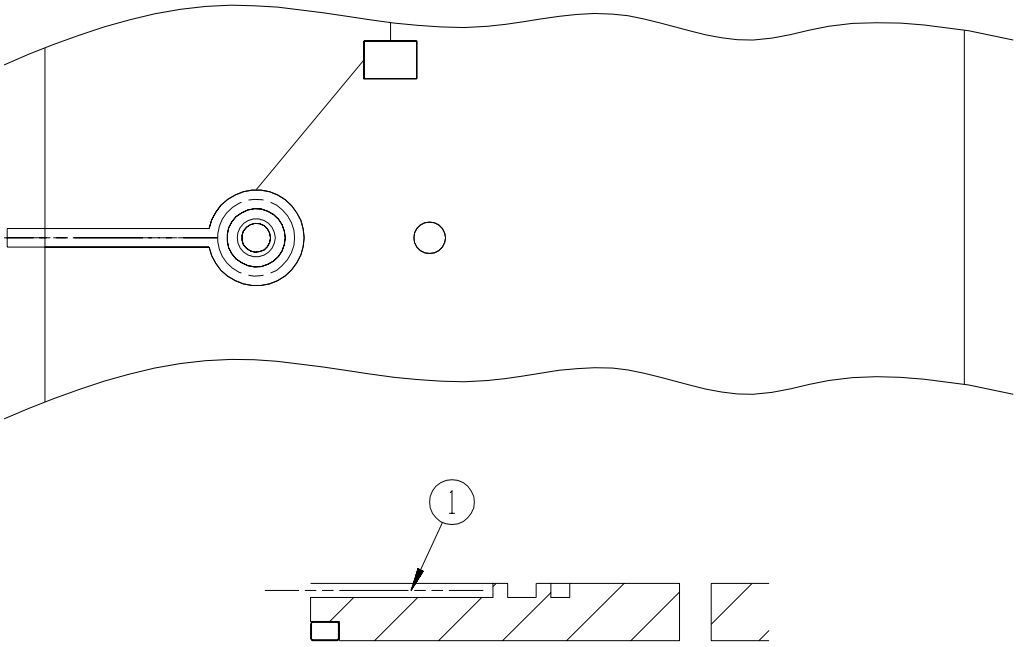

KEY	PART NUMBER	U/M	DESCRIPTION
1	154474-03-000	EA	CABLE - SATELLITE - COAX - 8' W/CONNECTORS - 48R
1	154474-05-000	EA	CABLE - SATELLITE - COAX - 16' W/CONNECTORS - 48R

COPYRIGHT © 2009 WINNEBAGO INDUSTRIES INC.

ELECTRICAL GROUP (CONTINUED)

12V BODY WIRING (CONTINUED)

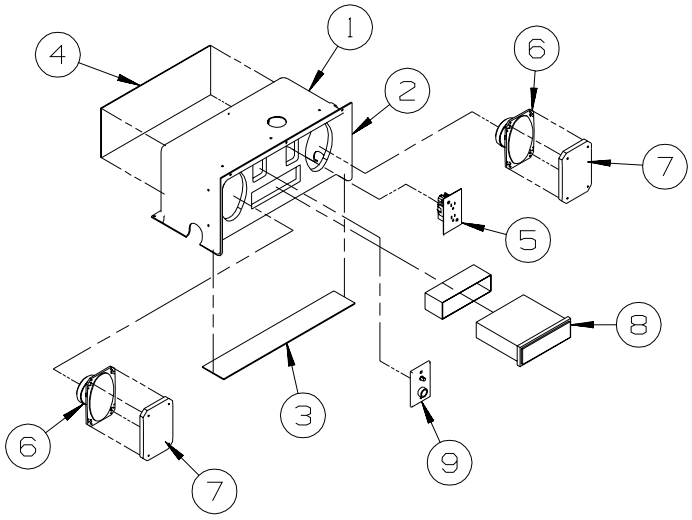

KEY	PART NUMBER	U/M	DESCRIPTION
1	124696-01-01A	EA	BOX-ENTERTAINMENT CTR/EXT-19.4"W X 10"H X 10.2"D W/CUTOUTS
2	127409-02-L15	EA	PLATE - RADIO MOUNTING
3	104898-01-02A	EA	PLATE - PLASTIC BOTTOM - BRIGHT WHITE
4	104898-02-02A	EA	PLATE - PLASTIC BACK - BRIGHT WHITE
5	172839-01-01A	EA	RECEPTACLE - ELECTRICAL - DOUBLE - BROWN
6	110469-01-000	EA	SPEAKER - 4" X 6" OVAL - COAXIAL
7	110470-01-01A	EA	GRILLE - 4" X 6" - OVAL SPEAKER - BLACK
8	155619-02-000	EA	RADIO - AM/FM CD-W/O REMOTE/WIRE HARNESS-MAGNADYNE M3200CD
	155619-03-000	EA	REMOTE - RADIO
9	076319-09-000	EA	WALLPLATE - TV CABLE RECEPTACLE - SINGLE - BROWN

COPYRIGHT © 2009 WINNEBAGO INDUSTRIES INC.

ELECTRICAL GROUP (CONTINUED)

EXTERIOR LAMPS

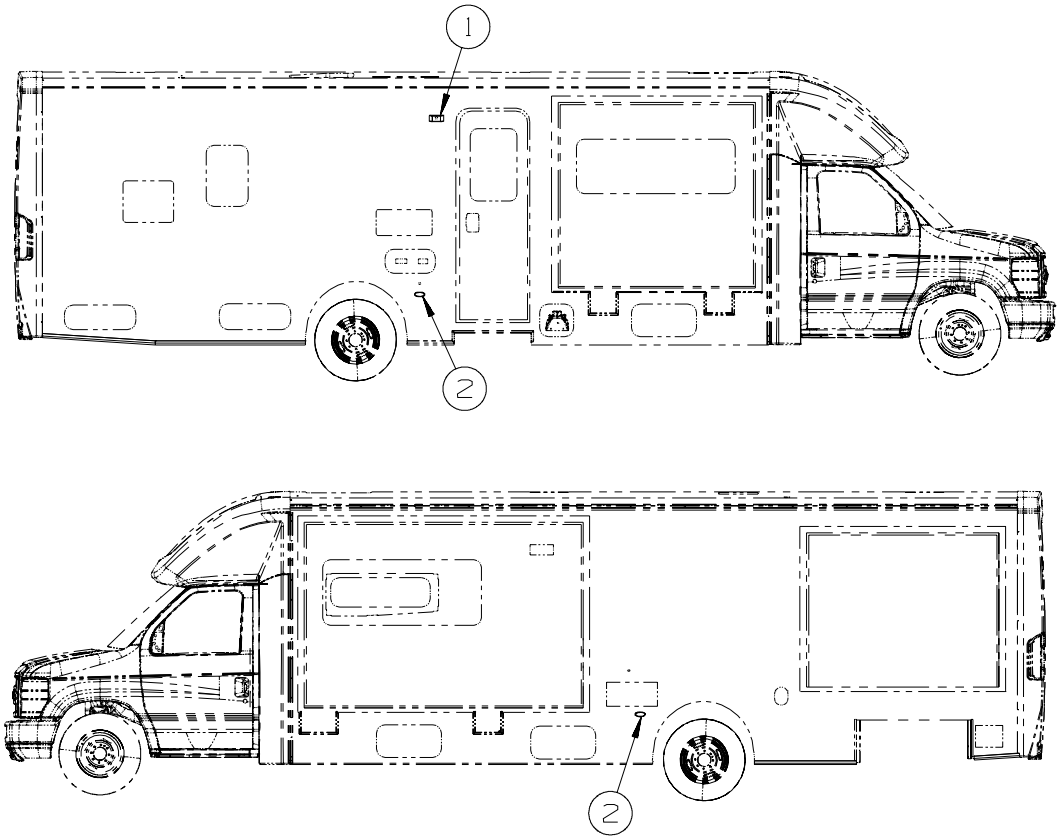

KEY	PART NUMBER	U/M	DESCRIPTION
1	097917-01-09A	EA	LIGHT - PORCH - ENTRY DOOR - WHITE
1	097917-01-08A	EA	LIGHT - PORCH - CHROME
2	147680-01-01A	EA	BASE - MARKER LAMP - WHITE
2	147680-02-01A	EA	LAMP - MARKER - LENS - AMBER

COPYRIGHT © 2009 WINNEBAGO INDUSTRIES INC.

ELECTRICAL GROUP (CONTINUED)

EXTERIOR LAMPS (CONTINUED)

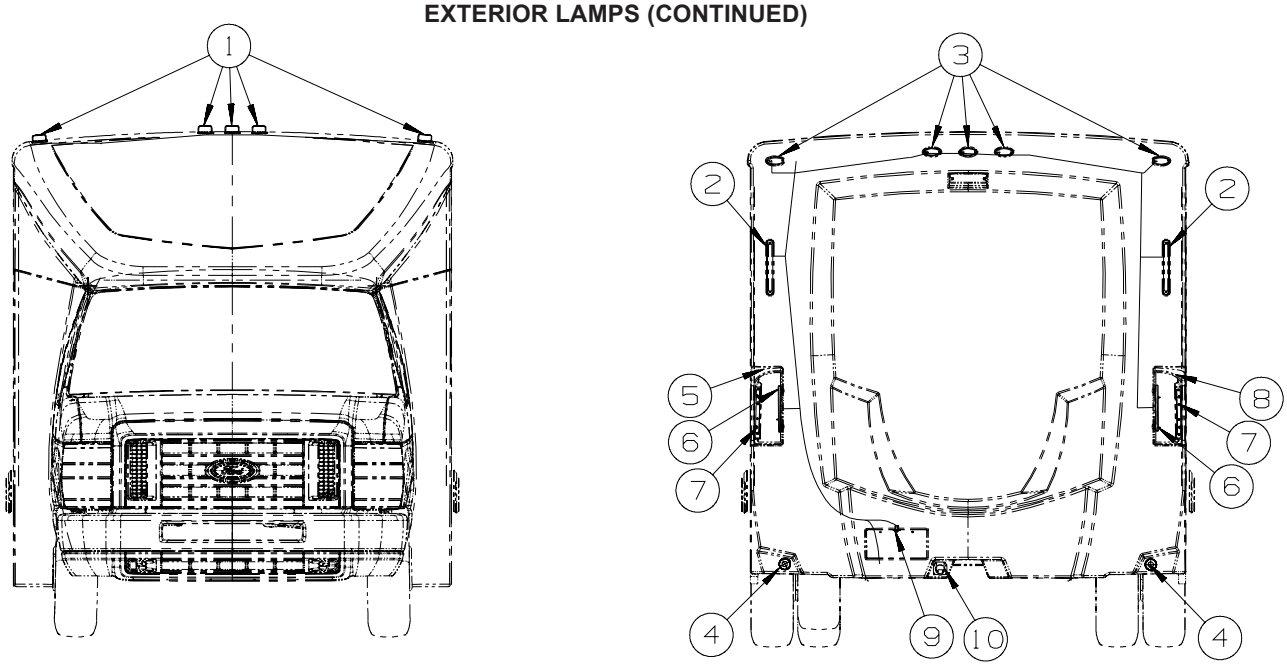

KEY	PART NUMBER	U/M	DESCRIPTION
1	132978-01-000	EA	LIGHT - CLEARANCE - AMBER
1	067789-02-000	EA	SOCKET - LAMP
1	036196-01-000	EA	BULB - 12V - #194 - .27 AMP - BAYONETTE
2	151076-01-000	EA	LIGHT - BRAKE - CENTER MOUNT
3	147680-01-01A	EA	BASE - MARKER LAMP - WHITE
3	147680-03-01A	EA	LAMP - MARKER - LENS - RED
4	141514-01-000	EA	REFLECTOR - ROUND/RED
5	153167-02-000	EA	LAMP - STOP/TURN/TAIL/BACK UP - LEFT HAND
6	151660-01-02B	EA	BRACKET/TAILLAMP - E-COATED
7	151662-01-02B	EA	BRACKET/TAILLAMP - OUTER - E-COATED
8	153167-01-000	EA	LAMP - STOP/TURN/TAIL/BACK UP - RIGHT HAND
9	087201-01-000	EA	LIGHT - HALF ROUND - 1" X 1.7" - PLASTIC - BLACK OR WHITE
10	146246-01-000	EA	CONNECTOR/PLUG - TRAILER - 7 PIN
10	157593-01-000	EA	CONNECTOR - PLUG - TRAILER - 7 SOCKET

COPYRIGHT © 2009 WINNEBAGO INDUSTRIES INC.

ELECTRICAL GROUP (CONTINUED)

FRONT END

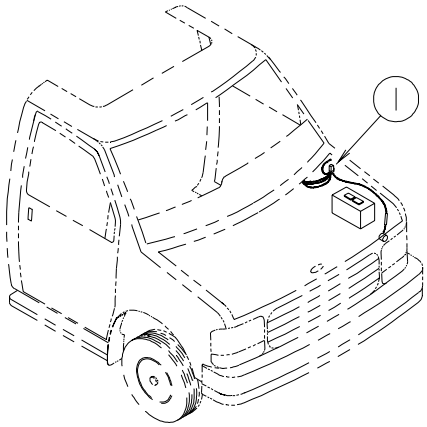

KEY	PART NUMBER	U/M	DESCRIPTION
1	100138-01-000	EA	MODULE - DAYTIME/RUNNING LIGHT - HAMSAR DRL #H8005B - 265 OR 27E

KEY	PART NUMBER	U/M	DESCRIPTION
	167450-07-01A	EA	PANEL - W/ELECTRIC MIRROR SWITCHES - BLACK - 28X
	167450-08-000	EA	HARNESS/WIRE - F/ELECTRIC MIRRORS - 28X

COPYRIGHT © 2009 WINNEBAGO INDUSTRIES INC.

ELECTRICAL GROUP (CONTINUED)

FRONT TV/DVD

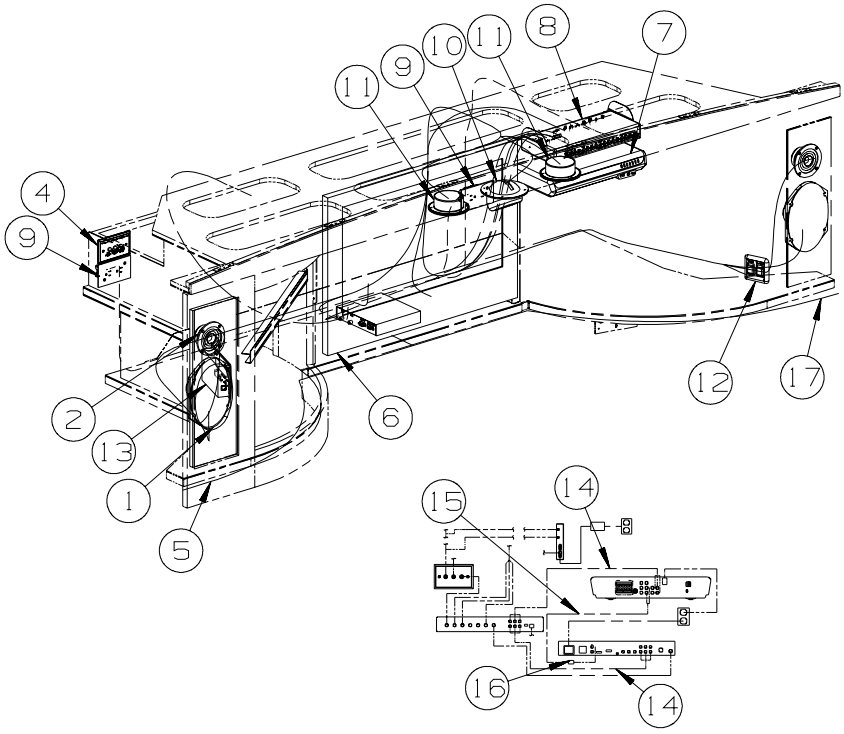

KEY	PART NUMBER	U/M	DESCRIPTION
1	110465-01-000	EA	KIT:2 SPEAKERS,2 WIRE ASMS,& 2 GRILLS
2	160868-01-01A	EA	SPEAKER - ROUND/CEILING - W/O CASE - BLACK
2	160868-02-01A	EA	GRILLE/ROUND - SPEAKER - SILVER
3	163142-11-000	EA	RECEIVER (EYE) - INFRARED
4	149557-04-01A	EA	PLATE/WALL - TRIPLE COAXIAL/HORIZONTAL - WHITE FROM: 00-00-00 THRU: 04-05-09
4	149557-04-02A	EA	PLATE/WALL - TRIPLE COAXIAL/HORIZONTAL FROM: 04-06-09 THRU: 99-99-99
5	146514-02-000	EA	CONNECTOR - LIGHT - 086
5	146514-03-000	EA	LIGHT - FLEX - ROPE/ROUND - W/O MOUNT CHANNEL
5	146514-04-000	EA	CHANNEL/MOUNT - F/ROPE LIGHT
6*	166446-01-000	EA	TV - 26" - LCD 16:9 - BOTTOM SPEAKER - JENSEN JE2608 FROM: 00-00-00 THRU: 11-30-08
6*	171727-01-000	EA	TV - 26" - LCD 16:9 - FRONT BUTTONS - JENSEN JE2608WV FROM: 12-01-08 THRU: 99-99-99
7*	164270-01-000	EA	DVD - HOME THEATER - W/O SPEAKERS - MEMOREX STS2891-R
8	168102-01-000	EA	SWITCH - VIDEO/ANTENNA/DVD - POWER SUPPLY
8	156586-02-02B	EA	BRACKET - SWITCH/VIDEO - E-COATED
9	058708-01-000	EA	RECEPTACLE - ELECTRIC - DOUBLE - BROWN
10	160867-01-01A	EA	SPEAKER - ROUND/CEILING - CREAM - MAGNADYNE - LS3EYC-WN
11*	165170-01-01A	EA	LIGHT - HALOGEN - ROUND/GLASS LENS - 10 WATT
12	135740-01-01A	EA	SWITCH - ROCKER - SPST - ON/OFF - BROWN
12	135741-02-01A	EA	SWITCH - BASE - DOUBLE - BROWN
12	135742-36-02A	EA	BEZEL - SWITCH - ACCENT/VALANCE - BROWN
12	138253-01-02A	EA	SWITCH - BLANK - BROWN
13	154474-02-000	EA	CONTROL/SATELLITE KIT - IDB BOX/IDD BOX-POWER SUPPLY-CABLE - 48R
14	136860-03-000	EA	CABLE - RCA - SHIELDED - 3 MALE TO MALE CONNECTORS - 6'
15	117420-05-000	EA	CABLE - W/MALE RCA ENDS - SHIELDED - 10'
16	123324-01-000	EA	FILTER - GROUND LOOP - ISOLATION TRANSFORMER
17	146514-01-000	EA	LIGHT - FLEX - ROPE/ROUND - W/STRIP - 086
17	146514-02-000	EA	CONNECTOR - LIGHT - 086

***COMPONENT PARTS LISTED LATER IN THIS GROUP**

COPYRIGHT © 2009 WINNEBAGO INDUSTRIES INC.

ELECTRICAL GROUP (CONTINUED)

COMPONENT PARTS FOR WIRING

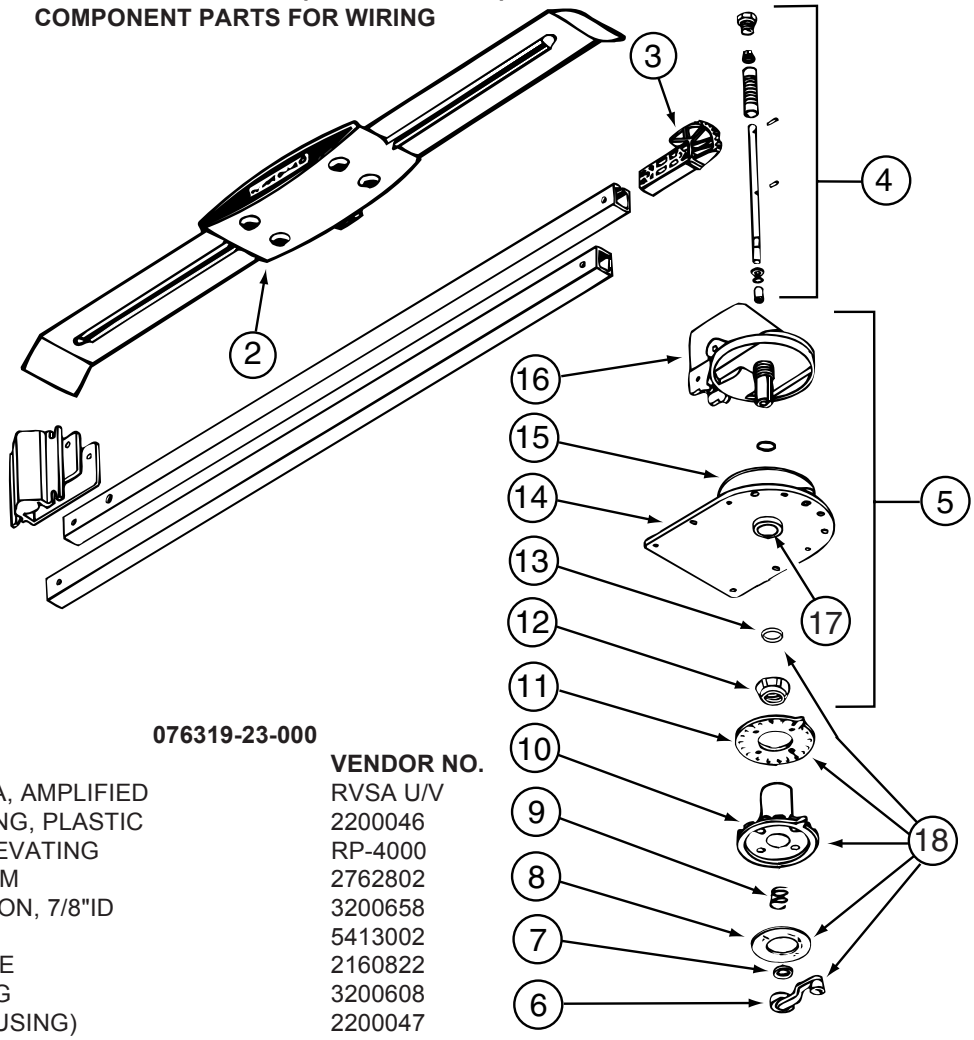

076319-23-000

KEY	PART NUMBER	U/M	DESCRIPTION	VENDOR NO.
2	076319-01-700	EA	HEAD-ANTENNA, AMPLIFIED	RVSA U/V
3	076319-01-701	EA	GEAR-ELEVATING, PLASTIC	2200046
4	076319-01-702	EA	SHAFT ASM-ELEVATING	RP-4000
5	076319-01-711	EA	BASE & LIFT ASM	2762802
7	076319-01-705	EA	GROMMET-NYLON, 7/8"ID	3200658
8	076319-01-708	EA	DECAL-CRANK	5413002
9	076319-01-707	EA	SPRING-HANDLE	2160822
11	076319-01-712	EA	PLATE - CEILING	3200608
12	076319-01-715	EA	NUT (GEAR HOUSING)	2200047
14	076319-01-713	EA	PLATE-BASE, STEEL	3100523
15	076319-01-703	EA	BEARING-NYLON, 5"OD	3200656
16	076319-01-714	EA	HOUSING, ROTATING GEAR	2200049
17	076319-01-704	EA	BEARING-NYLON, 1.25"OD	3200657
18	076319-01-709	EA	HANDLE-HEAD DIRECTIONAL	200644
	076319-01-716	EA	TUBING, ELEVATING	RP-2900

CONTACT WINNEBAGO PART SALES FOR UNLISTED COMPONENT(S)

076319-25-000

KEY	PART NUMBER	U/M	DESCRIPTION	VENDOR NO.
6	076319-01-706	EA	CRANK-W/SET SCREW UNIV/BEIGE	2750897
6	120233-01-710	EA	HANDLE-CRANK W/SCREW - WHITE	RP-6795
8	076319-01-708	EA	DECAL-CRANK	5413002
10	076319-25-700	EA	DIRECTIONAL HANDLE(WHITE)	3200612
11	076319-25-701	EA	PLATE - CEILING(WHITE)	3200609
13	120233-01-709	EA	WASHER-NYLON	RP-2658

CONTACT WINNEBAGO PART SALES FOR UNLISTED COMPONENT(S)

087694-01-000

KEY	PART NUMBER	U/M	DESCRIPTION	VENDOR NO.
	087694-01-700	EA	BULB	GE561

121935-01-01A

KEY	PART NUMBER	U/M	DESCRIPTION	VENDOR NO.
	121935-01-700	EA	LENS ONLY - W/CENTER HOLE	809511

COPYRIGHT © 2009 WINNEBAGO INDUSTRIES INC.

ELECTRICAL GROUP (CONTINUED)

COMPONENT PARTS FOR WIRING (CONTINUED)

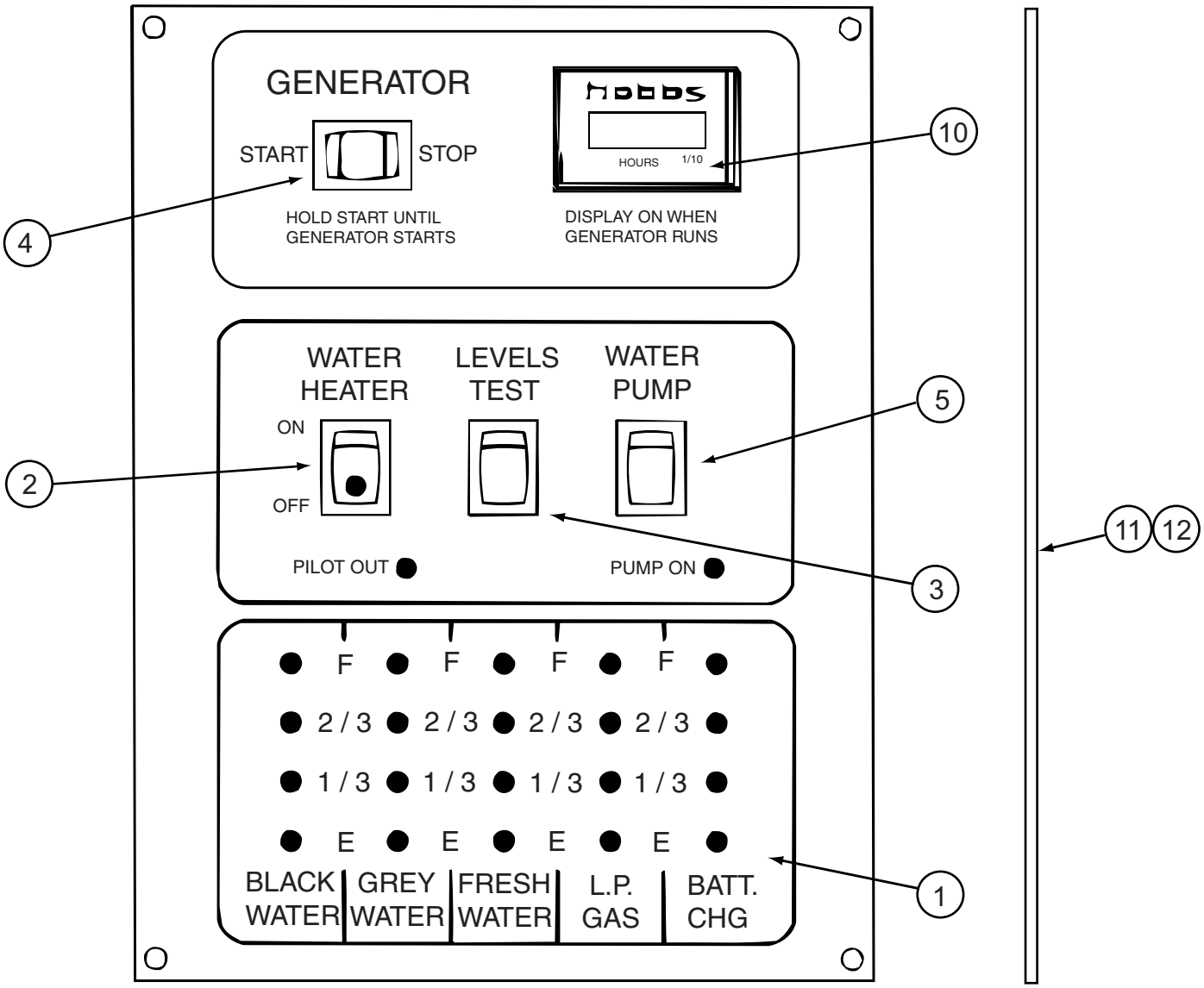

134940-06-01A

KEY	PART NUMBER	U/M	DESCRIPTION	VENDOR NO.
1	134940-01-702	EA	CHASSIS - SILKSCREENED	CC0558-00
2	134940-01-701	EA	SWITCH-SPST/ON-OFF/BLK W/LGT	L0109
3	096983-01-701	EA	SWITCH - SPST/MOM 2 TERMINAL	L0111-00
4	096983-01-702	EA	SWITCH - MOM/OFF/MOM/3 TERM	L0112-00
5	096983-01-703	EA	SWITCH - ON/ON	L0115-00
10	100258-10-701	EA	GAUGE-HR METER ONLY (LCD)	L0775-00
11	134940-06-700	EA	PC BOARD - SENSOR SYSTEM/RED	L5131-02
			CONTACT WINNEBAGO PART SALES FOR UNLISTED COMPONENT(S)	

134940-07-01A

KEY	PART NUMBER	U/M	DESCRIPTION	VENDOR NO.
1	134940-01-702	EA	CHASSIS - SILKSCREENED	CC0558-00
2	134940-01-701	EA	SWITCH-SPST/ON-OFF/BLK W/LGT	L0109
3	096983-01-701	EA	SWITCH - SPST/MOM 2 TERMINAL	L0111-00
4	096983-01-703	EA	SWITCH - ON/ON	L0115-00
5	134940-02-700	EA	SWITCH - DUMMY	L0118
11	134940-06-700	EA	PC BOARD - SENSOR SYSTEM/RED	L5131-02
			CONTACT WINNEBAGO PART SALES FOR UNLISTED COMPONENT(S)	

COPYRIGHT © 2009 WINNEBAGO INDUSTRIES INC.

ELECTRICAL GROUP (CONTINUED)

COMPONENT PARTS FOR WIRING (CONTINUED)

137135-05-000

KEY	PART NUMBER	U/M	DESCRIPTION	VENDOR NO.
	120233-01-714	EA	CLIP-E	5160818
	120233-01-737	EA	PLATE/INT-W/DIRECTIONAL HDLE	RK-CEIL
	120233-01-738	EA	HDW PKG-HANDLE/SPRING/WASHER	RK-HAND
	120233-04-703	EA	KIT-DIRECTIONAL HDL UPGRADE	RP-RM46
	137135-01-703	EA	KIT ELEV-SHAFT/PLUG/SPRING	RP-4400
	137135-01-704	EA	PIN - 1/4" X 3.25"	2160813
	137135-01-708	EA	TURRET	3100728
	137135-01-710	EA	PLATE - ROTATE LIMIT	3720052
	137135-01-712	EA	BEARING - OUTER	2590347
	137135-01-713	EA	TURRET BASE	3100730
	137135-01-714	EA	GEAR - ELEVATING SHAFT	2200465
	137135-01-715	EA	BEARING - INNER	2590348
	137135-01-717	EA	BOLT - FLAT HEAD	2160362
	137135-01-719	EA	BRACKET - PIVOT	2744945
	137135-01-722	EA	CLAMP	2590343

137417-06-01A

KEY	PART NUMBER	U/M	DESCRIPTION	VENDOR NO.
	137417-06-700	EA	LENS - DOUBLE WHITE	810867

154474-04-01A

KEY	PART NUMBER	U/M	DESCRIPTION	VENDOR NO.
	154474-04-703	EA	BOARD RF ASSEMBLY N/C	100087
	154474-04-705	EA	CABLE OUT DUAL TOP PCBA N/C	20034-1
	154474-04-706	EA	LNB DUAL EAGLE ASPEN N/C	1863-1

154474-04-02A

KEY	PART NUMBER	U/M	DESCRIPTION	VENDOR NO.
	154474-04-702	EA	DOME ONLY-REPLACEMENT-BLACK	1850-B-LP-FS
	154474-04-703	EA	BOARD RF ASSEMBLY N/C	100087
	154474-04-705	EA	CABLE OUT DUAL TOP PCBA N/C	20034-1
	154474-04-706	EA	LNB DUAL EAGLE ASPEN N/C	1863-1

163097-01-000

KEY	PART NUMBER	U/M	DESCRIPTION	VENDOR NO.
	163097-01-700	EA	KEY - #2382 (ILLINOIS LOCK)	2382
	163097-01-701	EA	KEY - #2341 (MILLER DIAL)	PART SALES

164270-01-000

KEY	PART NUMBER	U/M	DESCRIPTION	VENDOR NO.
	164270-01-700	EA	REMOTE	STS2891REM

165170-01-01A

KEY	PART NUMBER	U/M	DESCRIPTION	VENDOR NO.
	165170-01-700	EA	LENS	81230-LENS

165808-01-000

KEY	PART NUMBER	U/M	DESCRIPTION	VENDOR NO.
	165808-01-700	EA	REMOTE - TV	043-R54733W010

166446-01-000

KEY	PART NUMBER	U/M	DESCRIPTION	VENDOR NO.
	166446-01-700	EA	REMOTE - TV - GRAY SLIM LINE	PR7ATSC

COPYRIGHT © 2009 WINNEBAGO INDUSTRIES INC.

ELECTRICAL GROUP (CONTINUED)

CIRCUIT BREAKERS, FUSES & RELAYS

KEY	PART NUMBER	U/M	DESCRIPTION
	062901-02-000	EA	FUSE - 5 AMP - AUTOMOTIVE
	062901-03-000	EA	FUSE - 7.5 AMP - AUTOMOTIVE
	062901-05-000	EA	FUSE - 15 AMP - AUTOMOTIVE
	062901-06-000	EA	FUSE - 20 AMP - AUTOMOTIVE
	062901-07-000	EA	FUSE - 25 AMP - AUTOMOTIVE
	062901-08-000	EA	FUSE - 30 AMP - AUTOMOTIVE
	063910-01-000	EA	HOUSING - RELAY
	063912-02-000	EA	RELAY - CANISTER - SPDT
	083209-01-000	EA	CIRCUIT BREAKER - 15 AMP - 120 VOLT - CANADIAN
	083209-02-000	EA	CIRCUIT BREAKER - 15/15 AMP - 120 VOLT
	083209-03-000	EA	CIRCUIT BREAKER - 15/20 AMP - 120 VOLT
	083209-04-000	EA	CIRCUIT BREAKER - 30 AMP - 120 VOLT
	083209-05-000	EA	CIRCUIT BREAKER - 20 AMP - 120 VOLT
	083209-06-000	EA	CIRCUIT BREAKER - 30/15 AMP - 120 VOLT
	083209-07-000	EA	CIRCUIT BREAKER - 20/20 AMP - 120 VOLT
	083209-10-000	EA	CIRCUIT BREAKER - 20/30 AMP - 120 VOLT
	083209-11-000	EA	CIRCUIT BREAKER - 20/15 AMP - 120 VOLT
	092786-03-000	EA	BUSS BAR - 6.9" LONG
	092786-06-000	EA	BUSS BAR
	093654-01-000	EA	CIRCUIT BREAKER - 6 AMP - 12 VOLT - PUSH BUTTON - WHITE
	093654-02-000	EA	CIRCUIT BREAKER - 15 AMP - 12 VOLT - PUSH BUTTON - WHITE
	093654-03-000	EA	CIRCUIT BREAKER - 20 AMP - 12 VOLT - PUSH BUTTON - WHITE
	093654-05-000	EA	CIRCUIT BREAKER - 10 AMP - 12 VOLT - PUSH BUTTON - WHITE
	093655-01-000	EA	CIRCUIT BREAKER - 25 AMP - 12 VOLT - PUSH BUTTON - WHITE
	093655-02-000	EA	CIRCUIT BREAKER - 30 AMP - 12 VOLT - PUSH BUTTON - WHITE
	093655-03-000	EA	CIRCUIT BREAKER - 40 AMP - 12 VOLT - PUSH BUTTON - WHITE
	097611-03-000	EA	CIRCUIT BREAKER - 20 AMP
	113482-01-000	EA	CIRCUIT BREAKER - 55 AMP - MANUAL
	115187-01-000	EA	FUSE - 300 AMP - NON-DELAY
	115187-02-000	EA	HOLDER - FUSE
	115187-03-000	EA	FUSE - 150 AMP - NON-DELAY
	122811-01-000	EA	CIRCUIT BREAKER - 20/50/50/20 AMP - 250V
	141789-01-000	EA	SPACER - CIRCUIT BREAKER

CONVERTER, INVERTER, LOAD CENTERS

KEY	PART NUMBER	U/M	DESCRIPTION
	099048-04-000	EA	INVERTER - 300 WATT

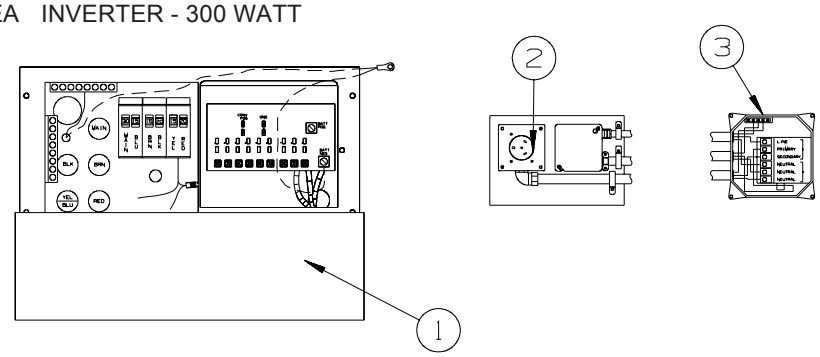

KEY	PART NUMBER	U/M	DESCRIPTION
1*	083208-07-000	EA	CONTROL CENTER - 45 AMP - 120V/12V - W/O BREAKERS
2	024924-02-000	EA	RECEPTACLE - POWER CORD - W/PARTIAL PLATE
3	136481-01-000	EA	MODULE - AUTO ENERGY SELECTOR

***COMPONENT PARTS LISTED LATER IN THIS GROUP**

COMPONENT PARTS FOR CONVERTER, INVERTER, LOAD CENTERS

083208-07-000

KEY	PART NUMBER	U/M	DESCRIPTION	VENDOR NO.
	083208-06-701	EA	CONVERTER ONLY (LOWER UNIT)	7345R

COPYRIGHT © 2009 WINNEBAGO INDUSTRIES INC.

ELECTRICAL GROUP (CONTINUED)

BOXES & CORDS

KEY	PART NUMBER	U/M	DESCRIPTION
	008054-01-000	EA	CORD - POWER - 10/3 WIRE - 30 AMP - 25'
	008289-01-000	EA	BOX - ELECTRIC/STEEL - 4" X 4" - 1/2" & 3/4" KNOCKOUTS
	008294-01-000	EA	COVER - ELECTRIC BOX - BLANK/STEEL - 4" X 4" - GRAY
	069238-01-000	EA	COVER - ELECTRICAL BOX - W/HOLE - 4" X 4" - GRAY
	115832-01-000	FT	CORD - HEAVY DUTY - 14-2 W/GROUND
	133070-01-000	EA	BOX - ELECTRIC/PLASTIC - 3" X 2" X 2.8" - UL
	133070-02-000	EA	BOX - ELECTRIC/PLASTIC - 3" X 2" X 2.8" - CSA - 265

WIRE ASSEMBLIES

KEY	PART NUMBER	U/M	DESCRIPTION
	077069-02-000	EA	CABLE/EXTENSION - RADIO ANTENNA - 96”
	077069-03-000	EA	CABLE/EXTENSION - RADIO ANTENNA - 260"
	106851-01-000	EA	WIRE ASSEMBLY - RUNNING LIGHTS - FUSE
	117420-05-000	EA	CABLE - W/MALE RCA ENDS - SHIELDED - 10'
	125853-04-000	EA	WIRE LOOM - ENTERTAINMENT CENTER
	136028-01-000	EA	WIRE ASM-SOFA,REST EASY
	136514-08-000	EA	CABLE - MONITOR/CAMERA - 50'
	137135-03-000	EA	WIRE LOOM - DIGITAL ELEVATION SENSOR
	137135-04-000	EA	WIRE HARNESS - POWER - DIGITAL ELEVATION SENSOR
	142258-02-000	EA	WIRE LOOM - VIDEO SWITCH/POWER SUPPLY
	145210-01-000	FT	CABLE - COAXIAL
	151316-03-000	EA	WIRE ASM - W/NON CONTACT SENSORS - GREY WATER - 43.2"
	151316-06-000	EA	WIRE ASM - W/NON CONTACT SENSORS - GREY WATER - 78.6"
	151317-01-000	EA	WIRE ASM-W/NON CONTACT SENSORS-FRESH WATER/BLK TANK-3.9"
	151317-02-000	EA	WIRE ASM-W/NON CONTACT SENSORS-FRESH WATER/BLK TANK-23.6"
	151317-03-000	EA	WIRE ASM-W/NON CONTACT SENSORS-FRESH WATER/BLK TANK-43.2"
	153168-01-000	EA	WIRE ASSEMBLY - REAR TAIL LIGHTS
	155619-05-000	EA	WIRE ASSEMBLY - RADIO - 12 PIN
	163598-04-000	EA	CABLE/COAX - SATELLITE - 9"
	165808-02-000	EA	WIRE/CABLE - POWER - MB QUART #MBQLC-15U-P
	165808-03-000	EA	WIRE/CABLE - POWER - W/CIGARETTE PLUG

COPYRIGHT © 2009 WINNEBAGO INDUSTRIES INC.

ELECTRICAL GROUP (CONTINUED)

CONNECTORS & CONDUIT

KEY	PART NUMBER	U/M	DESCRIPTION
	007940-01-000	EA	RECEPTACLE/SLIDE 16 TO 12 AWG - FEMALE END
	007940-02-000	EA	RECEPTACLE/SLIDE 10 AWG
	007954-01-000	EA	RECEPTACLE - HOUSING - 6 POSITION
	007956-05-000	EA	INSULATOR - SHRINK - 1/4"ID X 1 1/2"
	008311-01-000	EA	CONNECTOR - WIRE NUT - INSULATED - RED
	008312-01-000	EA	CONNECTOR - WIRE NUT - INSULATED - BLUE
	008313-01-000	EA	CONNECTOR - WIRE NUT - INSULATED - YELLOW
	008314-01-000	EA	CONNECTOR - WIRE NUT - INSULATED - GRAY
	008328-01-000	EA	TERMINAL - RING - 12/10 WIRE - #10 STUD FIT
	008331-01-000	EA	TERMINAL - RING - TONGUE - #4 WIRE - 3/8" STUD - COPPER
	008348-01-000	EA	TERMINAL - RING - 3/8" STUD 2 GA. WIRE
	008355-01-000	EA	CONNECTOR - CABLE CLAMPING - 3/4"
	008356-01-000	EA	CONNECTOR - PLASTIC - 3/8"
	008356-02-000	EA	CONNECTOR - PLASTIC - 21/32"
	035416-04-000	EA	TERMINAL - RING - #10 STUD FIT - INSULATED BARREL #16/14
	041953-01-000	FT	CONDUIT - CONVOLUTE SLIT - .5" ID - POLYETHYLENE
	041953-02-000	FT	CONDUIT - CONVOLUTE SLIT - .6" ID - POLYETHYLENE
	041953-03-000	FT	CONDUIT - CONVOLUTE SLIT - 1" ID (CLOTHES ROD COVER)
	041953-05-000	FT	CONDUIT - CONVOLUTE SLIT - .62" ID - POLYETHYLENE
	041953-06-000	FT	CONDUIT - CONVOLUTE SLIT - .4" ID - POLYETHYLENE
	041953-07-000	FT	CONDUIT - CONVOLUTE SLIT - .25" ID - POLYETHYLENE
	041953-08-000	FT	CONDUIT - CONVOLUTE SLIT - 1.5" ID - POLYETHYLENE
	041953-09-000	FT	CONDUIT - CONVOLUTE SLIT - .5" ID - NYLON
	041953-10-000	FT	CONDUIT - CONVOLUTE SLIT - .75" ID - NYLON
	041953-11-000	FT	CONDUIT - CONVOLUTE SLIT - 1.06" ID - NYLON
	041953-12-000	FT	CONDUIT - CONVOLUTE SOLID - 1.1" ID - NYLON
	041953-13-000	FT	CONDUIT - CONVOLUTE SLIT - 1.25" ID
	041953-14-000	FT	CONDUIT - CONVOLUTE SLIT - 1.5" ID
	041953-15-000	FT	CONDUIT - CONVOLUTE SLIT - 2"
	041953-16-000	FT	CONDUIT - CONVOLUTE SLIT - 2"
	047441-01-000	EA	TERMINAL-BATTERY, HORIZONTAL LUG
	047443-01-000	EA	TERMINAL - .250 RECEPTACLE FIT - INSULATED - 16/14 AWG
	047443-02-000	EA	TERMINAL - .250 RECEPTACLE FIT - INSULATED - 12/10 AWG
	047443-05-000	EA	TERMINAL - .250 RECEPTICLE FIT - 18GA AWG
	058028-01-000	EA	CONNECTOR - ELECTRICAL PIGTAIL - NYLON - CLEAR
	062036-01-000	EA	TERMINAL - PACK - CON - 12/10 AWG
	076319-12-000	EA	CONNECTOR - COAXIAL - ONE PIECE
	077479-02-000	EA	BOOT - BATTERY TERMINAL - SINGLE CABLE
	080015-02-000	EA	RECEPTACLE - FLAG - .185 - 16/14 GAUGE
	080015-03-000	EA	RECEPTACLE - FLAG - .250 - 14/16 GAUGE
	080015-04-000	EA	RECEPTACLE - FLAG - .187 - 16/14 GAUGE
	082109-01-000	EA	HOUSING - CONNECTOR - PACKARD
	082741-01-000	EA	CONNECTOR BODY - 2 CONNECTOR MALE
	087225-01-000	FT	SLEEVING - 1/2" - TYPE H
	088473-01-000	EA	HOUSING - PIN - 12 CAVITY (3 ROWS OF 4)
	088473-02-000	EA	HOUSING - PIN - 15 CAVITY (3 ROWS OF 5)
	088473-03-000	EA	HOUSING - PIN - 9 CAVITY (3 ROWS OF 3)
	088473-04-000	EA	HOUSING - PIN - 8 CAVITY IN-LINE
	088473-06-000	EA	HOUSING - PIN - 6 CAVITY (2 ROWS OF 3)
	088473-07-000	EA	HOUSING - PIN - 5 CAVITY - IN-LINE
	088473-08-000	EA	HOUSING - PIN - 4 CAVITY - IN-LINE
	088473-09-000	EA	HOUSING - PIN - 3 CAVITY - IN-LINE
	088473-10-000	EA	HOUSING - PIN - 2 CAVITY - IN-LINE
	088473-12-000	EA	HOUSING - PIN - 3 CAVITY - BLUE
	088473-13-000	EA	HOUSING - PIN - 3 CAVITY - GREEN
	088473-14-000	EA	HOUSING - PIN - 3 CAVITY - RED
	088474-01-000	EA	HOUSING - SOCKET - 12 CAVITY
	088474-02-000	EA	HOUSING - SOCKET - 15 CAVITY
	088474-03-000	EA	HOUSING - SOCKET - 9 CAVITY
	088474-06-000	EA	HOUSING - SOCKET - 6 CAVITY
	088474-07-000	EA	HOUSING - SOCKET - 5 CAVITY
	088474-08-000	EA	HOUSING - SOCKET - 4 CAVITY
	088474-09-000	EA	HOUSING - SOCKET - 3 CAVITY

COPYRIGHT © 2009 WINNEBAGO INDUSTRIES INC.

ELECTRICAL GROUP (CONTINUED)

CONNECTORS & CONDUIT (CONTINUED)

KEY	PART NUMBER	U/M	DESCRIPTION
	088474-10-000	EA	HOUSING - SOCKET - 2 CAVITY
	088475-01-000	EA	PIN - CONNECTOR - 14-20 AWG
	088475-02-000	EA	PIN - CONNECTOR - 10-12 AWG
	088476-01-000	EA	TERMINAL - ELECTRICAL
	088476-02-000	EA	SOCKET - CONNECTOR - 12-10 GA - PRE-TIN
	098261-01-000	EA	SOCKET - CONNECTOR - WEATHERPACK - 12 AWG
	098261-02-000	EA	SOCKET - CONNECTOR - WEATHERPACK - 14-18 AWG
	098262-01-000	EA	SEAL - CONNECTOR - WEATHERPACK
	098264-01-000	EA	HOUSING - 2 PIN - WEATHER PACK - MALE W/FEMALE PINS
	098264-02-000	EA	HOUSING - 2 PIN - WEATHER PACK - FEMALE W/MALE PINS
	098265-02-000	EA	PIN - CONNECTOR - WEATHER PACK
	102777-02-000	EA	TERMINAL - RING - #6 STUD - 10 AWG
	103608-01-000	EA	SOCKET - WEDGE BASE W/LEADS
	104100-01-000	EA	HOUSING - 1 POSITION - 75 AMPS
	104100-03-000	EA	TERMINAL - 75 AMP
	106007-02-000	EA	TERMINAL - FEMALE - 10-12 AWG
	110178-01-000	EA	HOUSING - WIPER MOTOR
	112823-01-000	EA	SPLICE - REDUCER - 16-14 TO 18-22
	113135-01-000	EA	TERMINAL - FEMALE - M/P - 14-16 - F/SEALED TERMINAL
	113308-01-000	EA	TERMINAL - FEMALE - M/P - 14-16 - 280
	113308-02-000	EA	TERMINAL - FEMALE - M/P - 14-18 - 280
	113468-01-000	EA	HOUSING - 2 POSITION-FEMALE-USED ON WIPER/WASHER WIRE ASM
	113468-02-000	EA	HOUSING - 2 POSITION - FEMALE
	115932-01-000	EA	CONNECTOR - FEMALE - 30 AMP/120 VOLT
	116811-01-000	EA	TERMINAL - .110 RECEPTACLE - 16-14 AWG
	118571-01-000	EA	CONNECTOR - 3-WAY - MALE/SEALED
	118571-02-000	EA	CONNECTOR - 3-WAY - FEMALE/SEALED
	118571-05-000	EA	LOCK - SECONDARY - FEMALE
	118571-06-000	EA	LOCK - SECONDARY - MALE
	118599-02-000	EA	TERMINAL - MALE - M/P - 280/14-12
	118820-01-000	EA	INSULATOR - TERMINAL
	129233-01-000	EA	HOUSING - 2-POSITION/FEMALE - 280-SERIES
	129233-02-000	EA	HOUSING - 2-POSITION/FEMALE - 280-SERIES
	129233-03-000	EA	HOUSING - 2-POSITION/FEMALE - 280-SERIES
	131681-01-000	EA	CONNECTOR - 3/4" SO CORD - UL/CS
	131681-02-000	EA	CONNECTOR - 3/4" SO CORD - UL/CS
	137207-01-000	EA	HOUSING - PIN - 2 CAVITY/HIGH AMP
	137208-01-000	EA	HOUSING - SOCKET - 2 CAVITY/HIGH AMP
	137209-01-000	EA	PIN - CONNECTOR - 10AWG/HIGH AMP
	137210-01-000	EA	SOCKET - CONNECTOR - 10 AWG/HIGH AMP
	138996-04-000	EA	CONNECTOR - LAMP
	142520-01-000	EA	TERMINAL - FEMALE - MINI-FIT 16
	142522-01-000	EA	HOUSING - 4 PIN/MALE - MINI FIT
	142522-02-000	EA	HOUSING - 6 PIN/MALE - MINI FIT
	142522-03-000	EA	HOUSING - 8 PIN/MALE - MINI FIT
	142522-04-000	EA	HOUSING - 10 PIN/MALE - MINI FIT
	142522-05-000	EA	HOUSING - 12 PIN/MALE - MINI FIT
	142522-06-000	EA	HOUSING - 14 PIN/MALE - MINI FIT
	142524-01-000	EA	HOUSING - 4 PIN/FEMALE - WEATHER PACK
	142524-02-000	EA	HOUSING - 4 PIN/FEMALE - WEATHER PACK
	144283-01-000	EA	CONNECTOR - 110V - F/USE WITH SOW WIRE - BLUE
	144283-02-000	EA	CONNECTOR - 110V - F/USE WITH NM ROMEX WIRE - CLEAR
	145171-01-000	EA	CONNECTOR - COAXIAL
	148335-01-000	EA	HOUSING - 8-POSITION/MALE - 280-GT SERIES
	148335-02-000	EA	HOUSING - 4-POSITION/MALE - 280-GT SERIES
	148335-03-000	EA	HOUSING - 6-POSITION/MALE - 280-GT SERIES
	149683-01-000	EA	HOUSING - F/5 CAVITY RECEPTACLE - W/SQUARE GUIDE PIN
	149683-02-000	EA	HOUSING - F/5 CAVITY RECEPTACLE - W/ROUND GUIDE PIN
	149686-01-000	EA	TERMINAL - .250 RECEPTACLE
	149687-01-000	EA	HOUSING - 2 POSITION/MALE - PACKARD
	149687-02-000	EA	LOCK - F/2 POSITION HOUSING - PACKARD
	149688-01-000	EA	TERMINAL - MALE - 16 GAUGE WIRE
	156035-01-000	EA	HOUSING - 12-POSITION/FEMALE - 280-GT SERIES

COPYRIGHT © 2009 WINNEBAGO INDUSTRIES INC.

ELECTRICAL GROUP (CONTINUED)

CONNECTORS & CONDUIT (CONTINUED)

KEY	PART NUMBER	U/M	DESCRIPTION
	156041-01-000	EA	TERMINAL - FEMALE - 16-12 - 280-GT SERIES
	156043-01-000	EA	HOUSING - 2-POSITION/FEMALE - 480-MP SERIES
	156043-02-000	EA	LOCK - F/2 POSITION HOUSING - 480 SERIES
	156044-01-000	EA	TERMINAL - FEMALE - 16-12 - 280-GT - F/SEALED HOUSING
	156045-01-000	EA	HOUSING - 10-POSITION/FEMALE - 280-GT SERIES
	156045-02-000	EA	HOUSING - 4-POSITION/FEMALE - 280-GT SERIES
	156045-03-000	EA	HOUSING - 8-POSITION/FEMALE - 280-GT SERIES
	156045-04-000	EA	HOUSING - 6-POSITION/FEMALE - 280-GT SERIES
	156207-01-000	EA	HOUSING - 6-POSITION/MALE - 150-GT SERIES
	156208-01-000	EA	TERMINAL - MALE - 18-16 - 150-GT SERIES
	157590-01-000	EA	TERMINAL - FEMALE - M/P - 10-12 - 630
	157592-01-000	EA	HOUSING - 7-POSITION/FEMALE - M/P
	157592-02-000	EA	LOCK - SECONDARY - F/7 POSITION HOUSING
	157656-01-01A	EA	CONNECTOR - DASH LIGHT - BLACK
	158357-01-000	EA	HOUSING - 3 PIN/MALE - MINI FIT
	158373-01-000	EA	HOUSING - SOCKET - 16 CAVITY - MINI MATE-N-LOCK
	158374-01-000	EA	SOCKET - 16-20 CAVITY - MINI MATE-N-LOCK
	164685-01-000	EA	HOUSING - PIN - 7-POSITION
	164687-01-000	EA	PIN - CONNECTOR - 16-14
	164689-01-000	EA	SEAL - CONNECTOR
	168450-01-000	EA	CONNECTOR/ADAPTER - COAX

COPYRIGHT © 2009 WINNEBAGO INDUSTRIES INC.

ELECTRICAL GROUP (CONTINUED)

CHASSIS

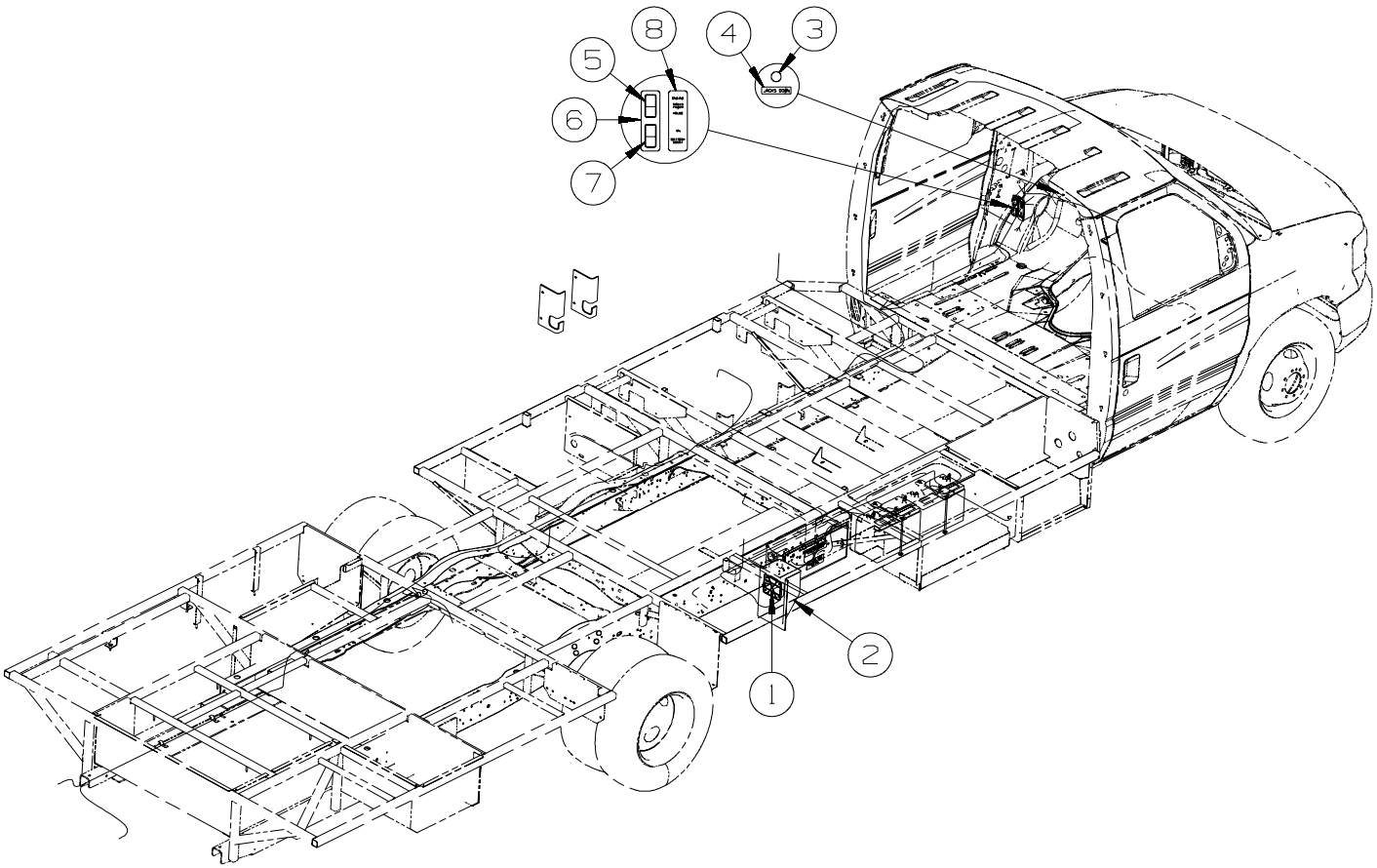

KEY	PART NUMBER	U/M	DESCRIPTION
1	149828-01-000	EA	CONTROL/MODULE - SLIDE/SINGLE/HIGH SPEED FROM: 00-00-00 THRU: 10-29-08
1	171064-01-000	EA	CONTROL/MODULE - SLIDE/SINGLE/HIGH SPEED FROM: 10-30-08 THRU: 99-99-99
2	078040-04-000	EA	SHROUD - 8.2"W X 12.6"H X 5.1"D - BLACK
3	150237-01-000	EA	LIGHT - INDICATOR - RED - 60M
4	133533-01-01A	EA	LABEL - JACKS DOWN - CLEAR W/WHITE LETTERING - 60M
5	108357-08-000	EA	SWITCH - ROCKER - DPDT - 0N/NONE/ON - 6 TERM - W/O COVER
5	108356-02-01A	EA	COVER/ACTUATOR SWITCH - 2 ROWS DIMPLES - BLACK
5	108355-01-000	EA	HOUSING - SWITCH
6	144363-12-04B	EA	PLATE - SWITCH - BLACK
7	108357-09-000	EA	SWITCH - ROCKER - SPDT - ON/NONE/MOM - 3 TERM - W/O COVER
7	108356-02-01A	EA	COVER/ACTUATOR SWITCH - 2 ROWS DIMPLES - BLACK
7	108355-01-000	EA	HOUSING - SWITCH
8	145731-01-01A	EA	LABEL - SWITCH - RADIO/BATTERY - BLACK

COPYRIGHT © 2009 WINNEBAGO INDUSTRIES INC.

ELECTRICAL GROUP (CONTINUED)

CHASSIS (CONTINUED)

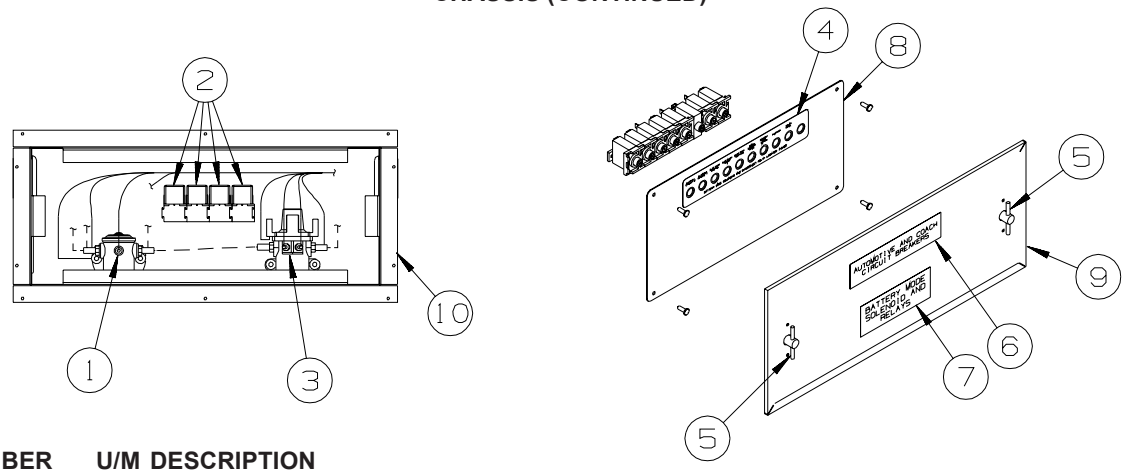

KEY	PART NUMBER	U/M	DESCRIPTION
1	008188-01-000	EA	SOLENOID - 3 POST - BATTERY CHANGE OVER
2	063912-02-000	EA	RELAY - CANISTER - SPDT
3	086273-01-000	EA	RELAY - BATTERY DISCONNECT
4	093236-52-000	EA	LABEL - CIRCUIT BREAKER
5	098196-01-000	EA	LATCH - 1/4 TURN - T-BAR
6	098379-01-000	EA	LABEL - CIRCUIT BREAKER - FRONT BOX
7	098379-04-000	EA	LABEL - ELECTRICAL BOX - SIDE
8	139067-09-02B	EA	PLATE - CIRCUIT BREAKER/HOUSE - E-COATED
9	141273-04-02B	EA	COVER - ELECTRICAL BOX - E-COATED
	092492-19-000	EA	SEAL - ELECTRIC BOX - 19" X 8"
10	155605-01-02B	EA	BOX - ELECTRICAL - E-COATED

BATTERY INSTALLATION

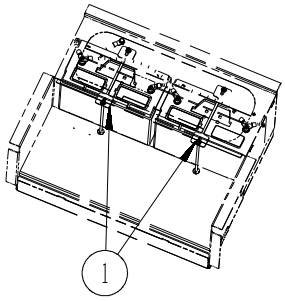

KEY	PART NUMBER	U/M	DESCRIPTION
1	160014-03-02B	EA	TIEDOWN - BATTERY - E-COATED

COPYRIGHT © 2009 WINNEBAGO INDUSTRIES INC.

EXTERIOR BODY GROUP

GRAPHICS & PAINT

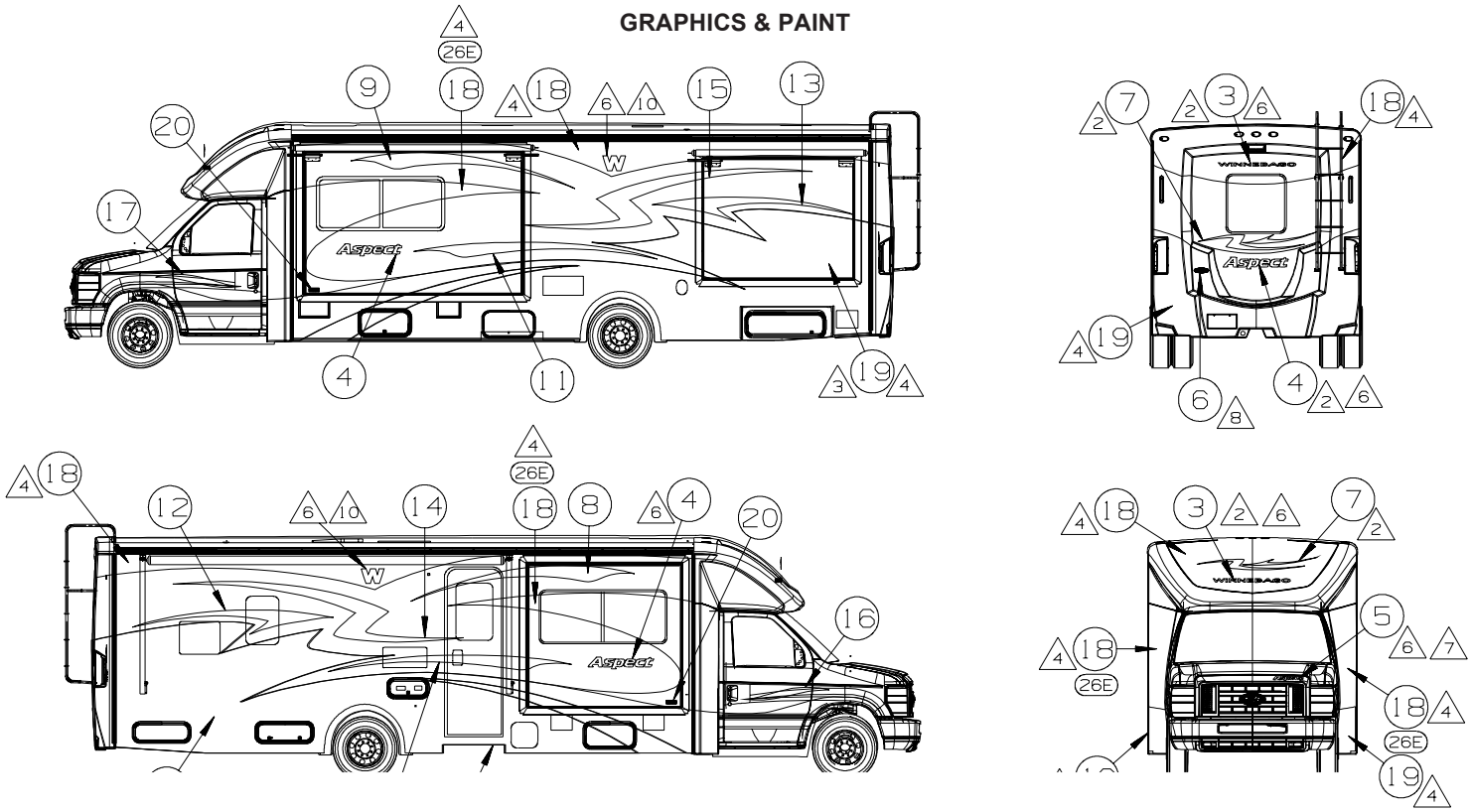

KEY	PART NUMBER (27G)	PART NUMBER (92K)	PART NUMBER (24E)	DESCRIPTION
1		109506-01-000		FILM-URETHANE PROTECTANT
4 2		141599-27-000		PAINT-CLEAR COAT
3		120702-03-33A		DECAL-LOGO WINNEBAGO
4		150102-01-01A		DECAL-LOGO ASPECT LG
5		150102-02-01A		DECAL-LOGO ASPECT SML
6		151687-01-01A		DECAL/BEZEL DOMED NAMEPLATE WINNEBAGO
7	166690-01-01A	166690-01-02A		DECAL-FRONT & BACK
8		166691-01-01A		DECAL-SWEEP #1 RH
9		166691-02-01A		DECAL-SWEEP #1 LH
10	166692-01-01A	166692-01-02A		DECAL-SWEEP #2 RH
11	166692-02-01A	166692-02-02A		DECAL-SWEEP #2 LH
12	166693-01-01A	166693-01-02A		DECAL-SWEEP #3 RH
13	166693-02-01A	166693-02-02A		DECAL-SWEEP #3 LH
14	166694-01-01A	166694-01-02A		DECAL-ZIG RH
15	166694-02-01A	166694-02-02A		DECAL-ZIG LH
16	166695-01-01A	166695-01-02A		DECAL-SWEEP CAB RH
17	166695-02-01A	166695-02-02A		DECAL-SWEEP CAB LH
18	141599-88-000 / SW #60588	141599-90-000 / SW #44094-2	141599-41-000	PAINT
19	141599-89-000 / sw #63499	141599-83-000 / SW #62444-1		PAINT
20		132664-02-01A		DECAL-LOGO DOMED WINNEBAGO
12 21		170853-01-01A		KIT-PAINTMASK, 728B
22		170853-02-01A		KIT-PAINTMASK, 730C

6 LOGO IS TO BE ±1 MM ON A HORIZONTAL PLANE (END TO END).

5 FILM TO PROTECT BOTTOM OF DOOR FROM SCUFF MARKS.

4 CLEAR COAT TO BE APPLIED ON PAINTED AREAS TO PROTECT PAINT.

3 PAINTED AREA IS TO BE BELOW FEATURE STRIP FOR OPTIONAL PAINTED MODELS AND CONTINUES ON CAB DOORS TO WHEELWELL.

2 CENTERED ON UNIT.

1. APPLY PROTECTOR 116424-01-000 TO WATER HEATER DOOR LATCH.

12 PAINT MASK TO BE REMOVED AFTER PAINT.

11. VINYL DECAL WILL BE APPLIED WHERE EVER GRAPHIC DESIGN PATTERN IS POSITIONED OVER SLIDEROOM EXTRUSION, BUT WILL NOT BE APPLIED TO VINYL SCREW COVER INSERTS.

10 BODY COLOR.

9. NO VINYL OR PAINT ON SLIDEOUT ROOM END PANELS.

8 CENTER ON SURFACE.

7 LOCATE DECAL 240 MM LEFT OF HOOD EDGE AND 190 MM UP FROM HOOD EDGE.

NOTES:

16Y FORD CHASSIS - 14,500#_GVWR
24E EXTERIOR GRAPHICS PACKAGE #3
92K EXTERIOR GRAPHICS PACKAGE #2
27G EXTERIOR GRAPHICS PACKAGE #1

COPYRIGHT © 2009 WINNEBAGO INDUSTRIES INC.

EXTERIOR BODY GROUP (CONTINUED)

GRAPHICS & PAINT (CONTINUED)

FULL BODY PAINT

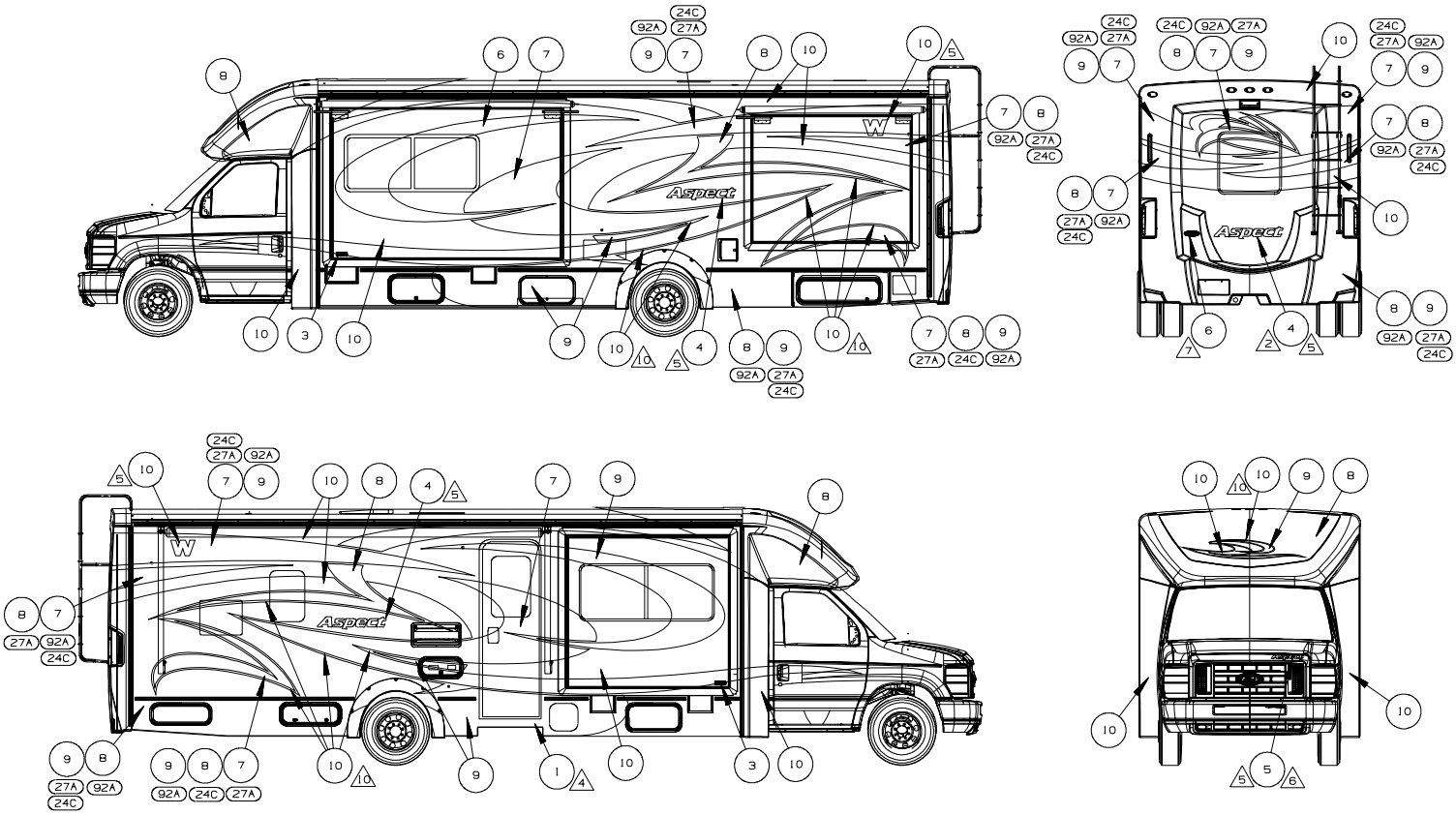

(27A) FULL BODY PAINT PKG #1

KEY	PART NUMBER	U/M	DESCRIPTION CHARCOAL
1	109506-01-000	EA	FILM-URETHANE PROTECTANT
3 → 2	----------	GL	PAINT-CLEAR COAT - SHERWIN WILLIAMS
3	132664-02-CHT(01A)	EA	DECAL-LOGO DOMED WINNEBAGO - CHROME/RED/BLACK
4	150102-01-CHT(01A)	EA	DECAL-LOGO ASPECT LG - CHARCOAL/STERLING SILVER/WARM SILVER
5	150102-02-CHT(01A)	EA	DECAL-LOGO ASPECT SML - CHARCOAL/STERLING SILVER/WARM SILVER
6	151687-01-CHT(01A)	EA	DECAL/BEZEL - DOMED NAMEPLATE WINNEBAGO - CHROME/RED
7	----------	GL	PAINT-BLACK MIST MET - SW #40888
8	----------	GL	PAINT-IRON GRAY MET - SW #42839
9	----------	GL	PAINT-BRT PLATINUM MET - SW #48823
10 (16Y)	----------	GL	PAINT-FORD SILVER MET - SW #43638

(92A) FULL BODY PAINT PKG # 2

KEY	PART NUMBER	U/M	DESCRIPTION ROSEWOOD
1	109506-01-000	EA	FILM-URETHANE PROTECTANT
3 → 2	----------	GL	PAINT-CLEAR COAT - SHERWIN WILLIAMS
3	132664-02-CHT(01A)	EA	DECAL-LOGO DOMED WINNEBAGO - CHROME/RED/BLACK
4	150102-01-CHT(01A)	EA	DECAL-LOGO ASPECT LG - CHARCOAL/STERLING SILVER/WARM SILVER
5	150102-02-CHT(01A)	EA	DECAL-LOGO ASPECT SML - CHARCOAL/STERLING SILVER/WARM SILVER
6	151687-01-CHT(01A)	EA	DECAL/BEZEL - DOMED NAMEPLATE WINNEBAGO - CHROME/RED
7	----------	GL	PAINT-DK TOREADOR RED MET - SW #52973-4
8	----------	GL	PAINT-LT KHAKI MET - SW #64023-2
9	----------	GL	PAINT-DK GRAY MET - SW #64255
10 (16Y)	----------	GL	PAINT-FORD SILVER MET - SW #43638

(24C) FULL BODY PAINT PKG # 3

KEY	PART NUMBER	U/M	DESCRIPTION IRON GRAY
1	109506-01-000	EA	FILM-URETHANE PROTECTANT
3 → 2	----------	GL	PAINT-CLEAR COAT - SHERWIN WILLIAMS
3	132664-02-CHT(01A)	EA	DECAL-LOGO DOMED WINNEBAGO - CHROME/RED/BLACK
4	150102-01-CHT(01A)	EA	DECAL-LOGO ASPECT LG - CHARCOAL/STERLING SILVER/WARM SILVER
5	150102-02-CHT(01A)	EA	DECAL-LOGO ASPECT SML - CHARCOAL/STERLING SILVER/WARM SILVER
6	151687-01-CHT(01A)	EA	DECAL/BEZEL - DOMED NAMEPLATE WINNEBAGO - CHROME/RED
7	----------	GL	PAINT-DESERT SAND MICA MET - SW #60451-3
8	----------	GL	PAINT-IRON GRAY MET - SW #63300
9	----------	GL	PAINT-LT GRAY MET - SW #45729
10 (16Y)	----------	GL	PAINT-FORD SILVER MET - SW #43638

(16Y) FORD CHASSIS - 14,500#_GVWR
(24C) EXT FULL BODY PAINT PKG # 3
(92A) EXT FULL BODY PAINT PKG # 2
(27A) EXT FULL BODY PAINT PKG #1

NOTES:

1. APPLY PROTECTOR 116424-01-000 TO WATER HEATER DOOR LATCH.

△2 CENTERED ON UNIT.

△3 CLEAR COAT TO BE APPLIED ON PAINTED AREAS TO PROTECT PAINT.

△4 FILM TO PROTECT BOTTOM OF DOOR FROM SCUFF MARKS.

△5 LOGO IS TO BE ±1 MM ON A HORIZONTAL PLANE (END TO END).

△6 LOCATE DECAL 110 MM LEFT OF HOOD EDGE AND 80 MM UP FROM HOOD EDGE.

△7 CENTER ON SURFACE.

8. END PANELS OF SLIDEOUT ROOMS WILL BE PAINTED WITH BASE COAT AND CLEAR COAT. THERE WILL BE NO COLORED DESIGN GRAPHICS ELEMENTS PAINTED ON END PANELS.

9. USE PROTECTIVE FILM 145487-02-000 TO COVER UNSEALED ROOF SEAMS.

△10 PAINT APPEARS LIKE OUTLINE.

11. APPLY SEALER BODY SEAM CLEAR 94401-04-000 TO HELP SECURE EDGES.

DUPONT COLOR CODES ARE NOW FOUND IN THE PAINT CODE MANUAL. YOU CAN FIND THIS MANUAL ON YOUR DEALER INDEX WEBPAGE UNDER SERVICE.

COPYRIGHT © 2009 WINNEBAGO INDUSTRIES INC.

EXTERIOR BODY GROUP (CONTINUED)

PANELS & TRIMS

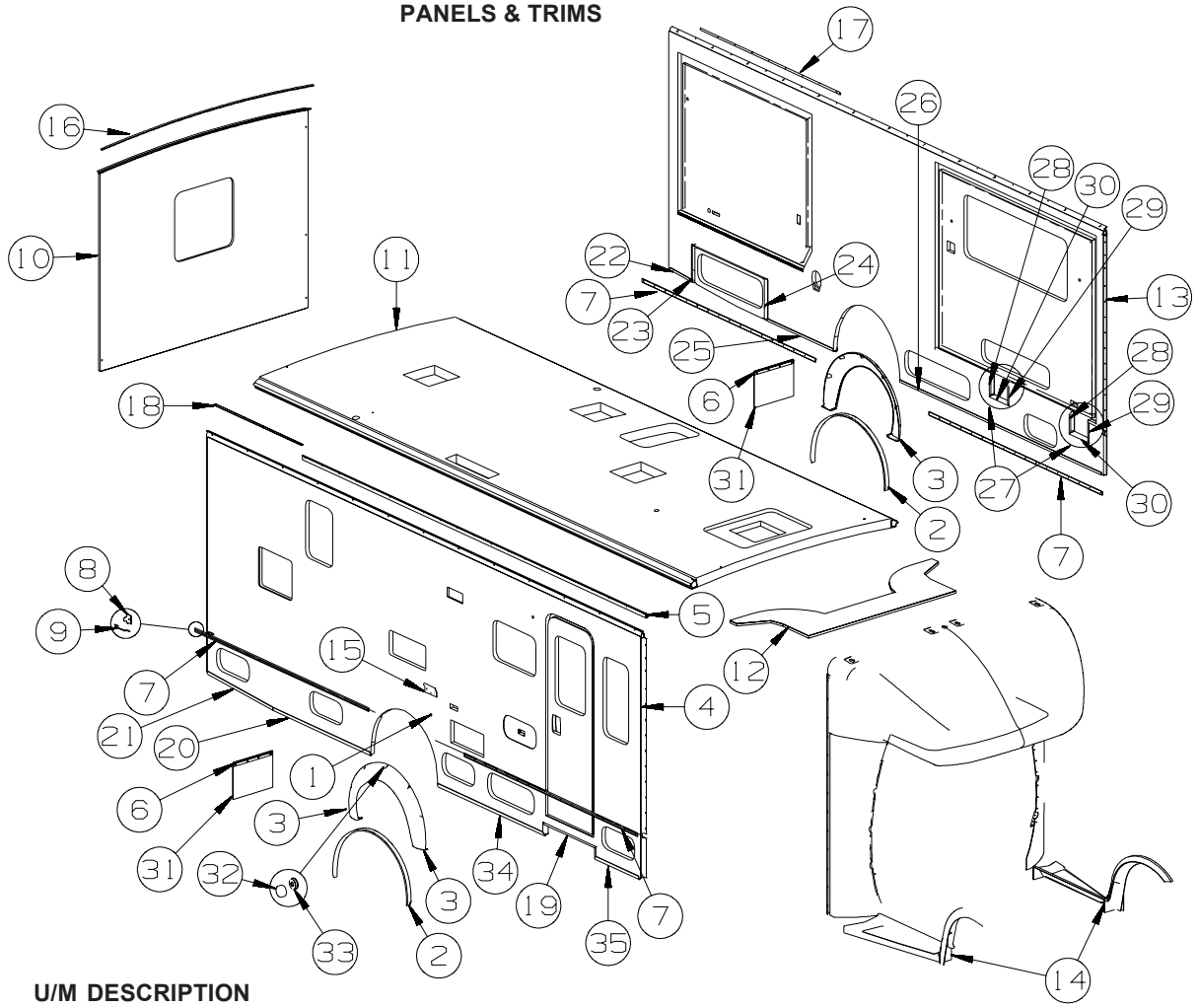

KEY	PART NUMBER	U/M	DESCRIPTION
1	120760-01-000	EA	RUBBER BUMPER - CLEAR - .1" THICK X .8" DIAMETER - 1LY
2	148255-01-01A	EA	TRIM - SIDEWALL - U CHANNEL/PVC - .5" X 1.7" X 42"
3	166109-01-10A	EA	TRIM - WHEELWELL/REAR - BLACK
	084453-02-000	EA	WASHER - 1/4" - F/SCREW COVER
4	165330-01-Y37	EA	SIDEWALL - PASSENGER - W/O WINDOWS/TRIMS (Y37, Y38)
4	165330-01-Y39	EA	SIDEWALL - PASSENGER - W/O WINDOWS/TRIMS (Y39, Y40)
4	165330-01-Y41	EA	SIDEWALL - PASSENGER - W/O WINDOWS/TRIMS (Y41, Y42)
4	165330-02-Y37	EA	SIDEWALL - PASSENGER - W/O WINDOWS/TRIMS (Y37, Y38) - 64V
4	165330-02-Y39	EA	SIDEWALL - PASSENGER - W/O WINDOWS/TRIMS (Y39, Y40) - 64V
4	165330-02-Y41	EA	SIDEWALL - PASSENGER - W/O WINDOWS/TRIMS (Y41, Y42) - 64V
4	165330-2A-Y37	EA	SIDEWALL - PASSENGER - W/O WINDOWS/TRIMS (Y37, Y38) - 64V/93A
4	165330-2A-Y39	EA	SIDEWALL - PASSENGER - W/O WINDOWS/TRIMS (Y39, Y40) - 64V/93A
4	165330-2A-Y41	EA	SIDEWALL - PASSENGER - W/O WINDOWS/TRIMS (Y41, Y42) - 64V/93A
4	165330-03-Y37	EA	SIDEWALL - PASSENGER - W/O WINDOWS/TRIMS (Y37, Y38) - 094
4	165330-03-Y39	EA	SIDEWALL - PASSENGER - W/O WINDOWS/TRIMS (Y39, Y40) - 094
4	165330-03-Y41	EA	SIDEWALL - PASSENGER - W/O WINDOWS/TRIMS (Y41, Y42) - 094
4	165330-04-Y37	EA	SIDEWALL - PASSENGER - W/O WINDOWS/TRIMS (Y37, Y38) - 13Y/094
4	165330-04-Y39	EA	SIDEWALL - PASSENGER - W/O WINDOWS/TRIMS (Y39, Y40) - 13Y/094
4	165330-04-Y41	EA	SIDEWALL - PASSENGER - W/O WINDOWS/TRIMS (Y41, Y42) - 13Y/094
4	165330-05-Y37	EA	SIDEWALL - PASSENGER - W/O WINDOWS/TRIMS (Y37, Y38) - 64V/094
4	165330-05-Y39	EA	SIDEWALL - PASSENGER - W/O WINDOWS/TRIMS (Y39, Y40) - 64V/094
4	165330-05-Y41	EA	SIDEWALL - PASSENGER - W/O WINDOWS/TRIMS (Y41, Y42) - 64V/094
4	P65330-05-Y37	EA	SIDEWALL - PASSENGER - W/O WINDOWS/TRIMS (Y37, Y38) - 64V/094/93A
4	P65330-05-Y39	EA	SIDEWALL - PASSENGER - W/O WINDOWS/TRIMS (Y39, Y40) - 64V/094/93A
4	P65330-05-Y41	EA	SIDEWALL - PASSENGER - W/O WINDOWS/TRIMS (Y41, Y42) - 64V/094/93A
4	165330-06-Y37	EA	SIDEWALL - PASSENGER - W/O WINDOWS/TRIMS (Y37, Y38) - 64V/13Y/094
4	165330-06-Y39	EA	SIDEWALL - PASSENGER - W/O WINDOWS/TRIMS (Y39, Y40) - 64V/13Y/094
4	165330-06-Y41	EA	SIDEWALL - PASSENGER - W/O WINDOWS/TRIMS (Y41, Y42) - 64V/13Y/094
4	P65331-06-Y37	EA	SIDEWALL - DRIVER - W/O WINDOWS/TRIMS (Y37, Y38) - 64V/13Y/094/93A
4	P65331-06-Y39	EA	SIDEWALL - DRIVER - W/O WINDOWS/TRIMS (Y39, Y40) - 64V/13Y/094/93A
4	P65331-06-Y41	EA	SIDEWALL - DRIVER - W/O WINDOWS/TRIMS (Y41, Y42) - 64V/13Y/094/93A

COPYRIGHT © 2009 WINNEBAGO INDUSTRIES INC.

EXTERIOR BODY GROUP (CONTINUED)

PANELS & TRIMS (CONTINUED)

KEY	PART NUMBER	U/M	DESCRIPTION
5	157284-01-01A	EA	RAIL - AWNING - 192" - BRIGHT WHITE
6	140922-01-02B	EA	RETAINER - MUD FLAP - 1" X 17.7" - E-COATED/BLACK
7	108688-06-08A	EA	STRIP - FEATURE - W/O INSERT/END CAPS - 96.9" - BLACK
8	108651-01-04A	EA	END CAP - FEATURE STRIP - BLACK
	108651-01-01A	EA	END CAP - FEATURE STRIP - UNPAINTED
9	105312-01-07A	EA	INSERT - FEATURE STRIP - VINYL - BRIGHT WHIT
10	165366-01-Y37	EA	BACKWALL/INNER - W/O REAR CAP (Y37, Y38)
10	165366-01-Y39	EA	BACKWALL/INNER - W/O REAR CAP (Y39, Y40)
10	165366-01-Y41	EA	BACKWALL/INNER - W/O REAR CAP (Y41, Y42)
10	165366-02-Y37	EA	BACKWALL/INNER - W/O REAR CAP (Y37, Y38) - 13Y
10	165366-02-Y39	EA	BACKWALL/INNER - W/O REAR CAP (Y39, Y40) - 13Y
10	165366-02-Y41	EA	BACKWALL/INNER - W/O REAR CAP (Y41, Y42) - 13Y
10	165366-03-A43	EA	BACKWALL/INNER - W/O REAR CAP (Y37, Y38) - 094
10	165366-03-A46	EA	BACKWALL/INNER - W/O REAR CAP (Y39, Y40) - 094
10	165366-03-Y41	EA	BACKWALL/INNER - W/O REAR CAP (Y41, Y42) - 094
10	165366-04-A43	EA	BACKWALL/INNER - W/O REAR CAP (Y37, Y38) - 13Y/094
10	165366-04-A46	EA	BACKWALL/INNER - W/O REAR CAP (Y39, Y40) - 13Y/094
10	165366-04-Y41	EA	BACKWALL/INNER - W/O REAR CAP (Y41, Y42) - 13Y/094
11	165332-01-Y37	EA	ROOF - W/O LIGHTS/VENTS - W/WIRING
12	P66600-01-Y37	EA	SLEEPERBOARD - HONEY CHERRY
12	P66600-01-Y38	EA	SLEEPERBOARD - BELMONT MAPLE
13	165331-01-Y37	EA	SIDEWALL - DRIVER - W/O WINDOWS/TRIMS (Y37, Y38)
13	165331-01-Y39	EA	SIDEWALL - DRIVER - W/O WINDOWS/TRIMS (Y39, Y40)
13	165331-01-Y41	EA	SIDEWALL - DRIVER - W/O WINDOWS/TRIMS (Y41, Y42)
13	165331-02-Y37	EA	SIDEWALL - DRIVER - W/O WINDOWS/TRIMS (Y37, Y38) - 64V
13	165331-02-Y39	EA	SIDEWALL - DRIVER - W/O WINDOWS/TRIMS (Y39, Y40) - 64V
13	165331-02-Y41	EA	SIDEWALL - DRIVER - W/O WINDOWS/TRIMS (Y41, Y42) - 64V
13	165331-2A-Y37	EA	SIDEWALL - DRIVER - W/O WINDOWS/TRIMS (Y37, Y38) - 64V/93A
13	165331-2A-Y39	EA	SIDEWALL - DRIVER - W/O WINDOWS/TRIMS (Y39, Y40) - 64V/93A
13	165331-2A-Y41	EA	SIDEWALL - DRIVER - W/O WINDOWS/TRIMS (Y41, Y42) - 64V/93A
13	165331-03-Y37	EA	SIDEWALL - DRIVER - W/O WINDOWS/TRIMS (Y37, Y38) - 094
13	165331-03-Y39	EA	SIDEWALL - DRIVER - W/O WINDOWS/TRIMS (Y39, Y40) - 094
13	165331-03-Y41	EA	SIDEWALL - DRIVER - W/O WINDOWS/TRIMS (Y41, Y42) - 094
13	165331-04-Y37	EA	SIDEWALL - DRIVER - W/O WINDOWS/TRIMS (Y37, Y38) - 13Y/094
13	165331-04-Y39	EA	SIDEWALL - DRIVER - W/O WINDOWS/TRIMS (Y39, Y40) - 13Y/094
13	165331-04-Y41	EA	SIDEWALL - DRIVER - W/O WINDOWS/TRIMS (Y41, Y42) - 13Y/094
13	165331-05-Y37	EA	SIDEWALL - DRIVER - W/O WINDOWS/TRIMS (Y37, Y38) - 64V/094
13	165331-05-Y39	EA	SIDEWALL - DRIVER - W/O WINDOWS/TRIMS (Y39, Y40) - 64V/094
13	165331-05-Y41	EA	SIDEWALL - DRIVER - W/O WINDOWS/TRIMS (Y41, Y42) - 64V/094
13	165331-06-Y37	EA	SIDEWALL - DRIVER - W/O WINDOWS/TRIMS (Y37, Y38) - 64V/13Y/094
13	165331-06-Y39	EA	SIDEWALL - DRIVER - W/O WINDOWS/TRIMS (Y39, Y40) - 64V/13Y/094
13	165331-06-Y41	EA	SIDEWALL - DRIVER - W/O WINDOWS/TRIMS (Y41, Y42) - 64V/13Y/094
14	149604-05-01A	EA	MUD FLAP - FIBERGLASS - PASSENGER - FORD - PRIMED
14	149604-06-01A	EA	MUD FLAP - FIBERGLASS - DRIVER - FORD - PRIMED
	146515-03-01A	EA	MAT - ANTI SLIP - RIGHT HAND - BLACK
	146515-04-01A	EA	MAT - ANTI SLIP - LEFT HAND - BLACK
	149604-19-01A	EA	RUNNING BOARD/WEDGE - PASSENGER - PRIMED
	149604-20-01A	EA	RUNNING BOARD/WEDGE - DRIVER - PRIMED
	149604-09-000	EA	HARDWARE KIT (RUNNING BOARD INSTALL) - FORD
15	167406-01-01A	EA	BRACKET/MOUNTING - TV - E-COATED - 1LY
16	114248-02-01A	EA	ANGLE - PLASTIC - .7" X .4" X 96.7" - MODERN IVORY FROM: 00-00-00 THRU: 09-07-08
16	114248-02-04A	EA	ANGLE - PLASTIC - .7" X .4" X 96.7" - BEIGE FROM: 09-08-08 THRU: 99-99-99
17	156981-09-01A	EA	RAIL - AWNING - 78" - BRIGHT WHITE
17	156981-09-02A	EA	RAIL - AWNING - 78" - BLACK
18	157799-07-01A	EA	TRIM - PLATFORM - 49.1" - SOFT WHITE FROM: 00-00-00 THRU: 09-21-08
19	168186-08-Y37	EA	TRIM - PASSENGER SIDEWALL W/ENTRY DOOR NOTCH - 112.2" - BRIGHT WHITE
19	168186-08-AA1	EA	TRIM - PASSENGER SIDEWALL W/ENTRY DOOR NOTCH - 112.2" - BLACK
20	168159-53-02A	EA	TRIM - SIDEWALL/BOTTOM - 54.3" - BLACK
21	168159-51-02A	EA	TRIM - SIDEWALL/BOTTOM - 36.1" - BLACK
22	168159-56-02A	EA	TRIM - SIDEWALL/BOTTOM - 12.4" - BLACK
23	156772-03-02A	EA	TRIM - SIDEWALL - 13.2" - BLACK

COPYRIGHT © 2009 WINNEBAGO INDUSTRIES INC.

EXTERIOR BODY GROUP (CONTINUED)

PANELS & TRIMS (CONTINUED)

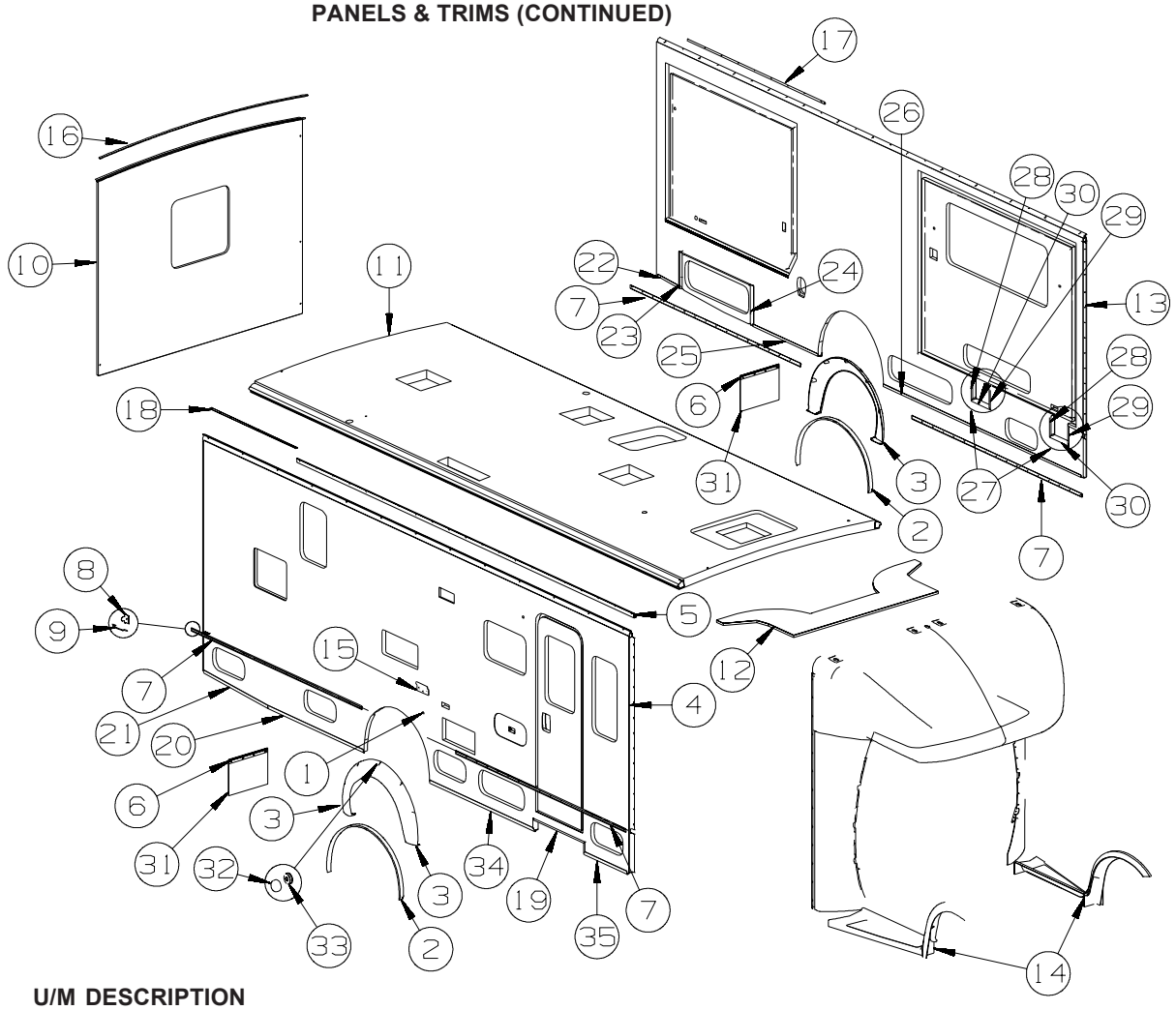

KEY	PART NUMBER	U/M	DESCRIPTION
24	156772-02-02A	EA	TRIM - SIDEWALL - 15.8" - BLACK
25	168159-55-02A	EA	TRIM - SIDEWALL/BOTTOM - 37" - BLACK
26	168159-54-01A	EA	TRIM - SIDEWALL/BOTTOM - 112.4" - BRIGHT WHITE
26	168159-54-02A	EA	TRIM - SIDEWALL/BOTTOM - 112.4" - BLACK
27	148736-01-S34	EA	TRIM - SIDEWALL - BRIGHT WHITE
27	148736-01-TN3	EA	TRIM - SIDEWALL - BLACK
28	137970-13-02A	EA	TRIM - SIDEWALL - 8.3"
29	137970-14-02A	EA	TRIM - SIDEWALL - 8.3"
30	137970-15-02A	EA	TRIM - SIDEWALL - 11"
31	017516-01-000	EA	MUD FLAP - 14"H X 18"W - W/O MOUNTING HOLES - RUBBER - BLK
32	168409-01-01A	EA	CAP/SCREW COVER - CHROME
33	168409-02-01A	EA	WASHER - 1/4" - F/SCREW COVER
34	168159-58-03A	EA	TRIM - SIDEWALL/BOTTOM - 24.7" - MILL
35	168159-57-03A	EA	TRIM - SIDEWALL/BOTTOM - 59.5" - MILL

***COMPONENT PARTS LISTED LATER IN THIS GROUP**

COPYRIGHT © 2009 WINNEBAGO INDUSTRIES INC.

EXTERIOR BODY GROUP (CONTINUED)

PANELS & TRIMS (CONTINUED)

BODY SECTIONS

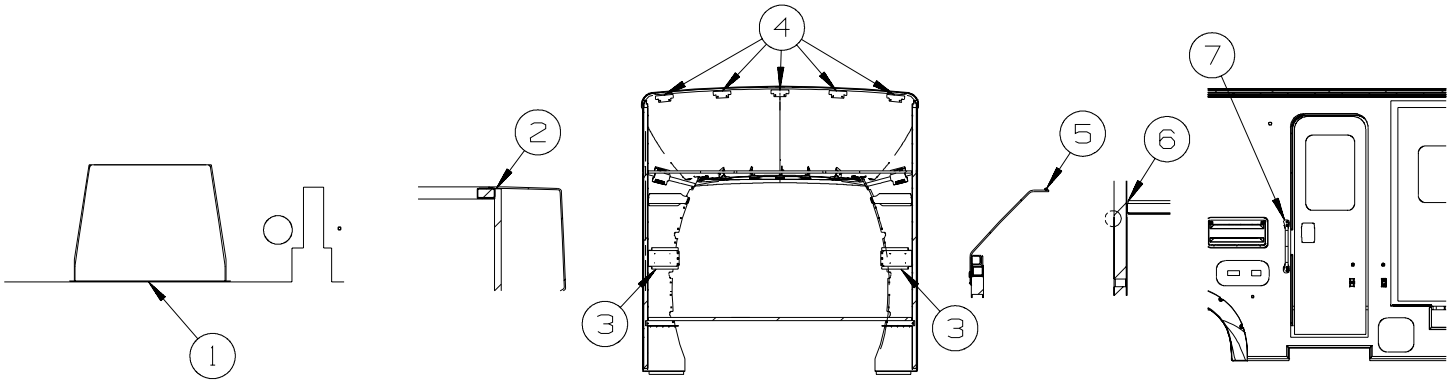

KEY	PART NUMBER	U/M	DESCRIPTION
1	165347-01-000	EA	WHEELWELL/HOUSING - PLASTIC
2	156622-01-01A	FT	SEALER - TAPE - 1/4"THICK X 3"WIDE X 100 FT
3	149392-01-02B	EA	BRACKET - TRANSITION/LOWER - E-COATED
4	134774-02-02B	EA	BRACKET - CAB ATTACHMENT - E-COATED
5	112160-01-000	FT	SEAL - D SECTION - .2 X .3" - FOAM RUBBER
6	104692-01-000	FT	SEAL - ADHESIVE BACKED FOAM - 3/4" THICK X 3/4" WIDE X 25'
7	152854-01-01A	EA	HANDLE - ASSIST - WHITE W/BLACK RUBBER GRIP - 18 5/8"
7	165309-01-01A	EA	ASSIST HANDLE - 18" - NON-LIGHTED - SST

COPYRIGHT © 2009 WINNEBAGO INDUSTRIES INC.

EXTERIOR BODY GROUP (CONTINUED)

PANELS & TRIMS (CONTINUED)

REAR CAP

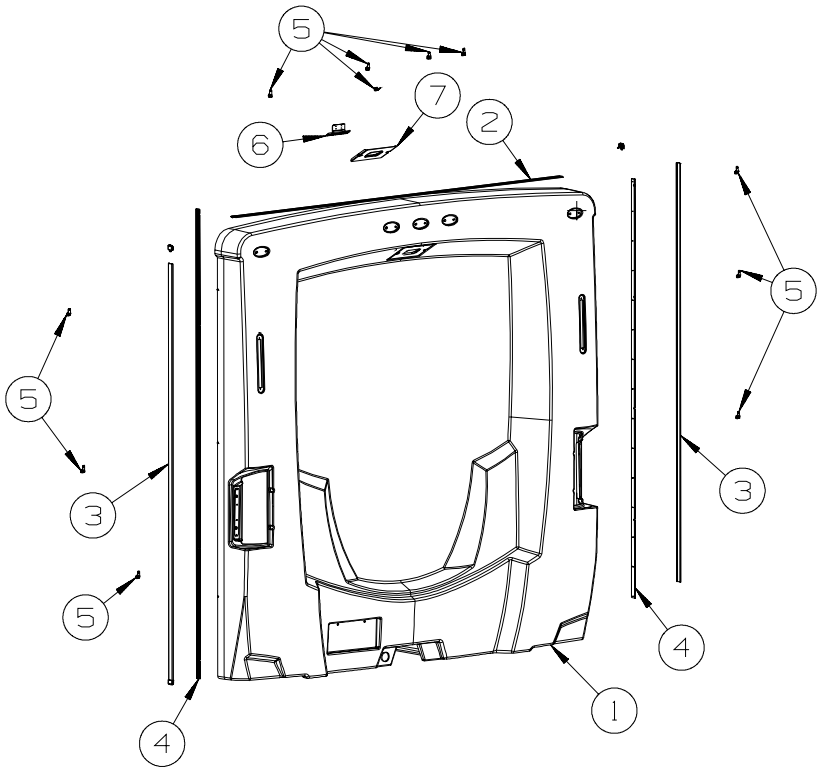

KEY	PART NUMBER	U/M	DESCRIPTION
1	165754-02-Y37	EA	PANEL - REAR CAP - W/O LIGHTS - BRIGHT WHITE
1	165754-02-AA1	EA	PANEL - REAR CAP - W/O LIGHTS - PRIMED
2	083805-08-000	EA	TRIM - ROOF CAP - 87.9" - MILL
3	108688-06-03A	EA	STRIP - FEATURE - W/O INSERT/END CAPS - 96.9" - BRIGHT WHT FROM: 00-00-00 THRU: 06-22-08
3	092041-19-01A	EA	TRIM - FRONT/REAR CAP (SIDEWALL) - 88.8" - BRIGHT WHITE FROM: 06-23-08 THRU: 99-99-99
3	108688-06-08A	EA	STRIP - FEATURE - W/O INSERT/END CAPS - 96.9" - BLACK FROM: 00-00-00 THRU: 06-22-08
3	092041-19-02A	EA	TRIM - FRONT/REAR CAP (SIDEWALL) - 88.8" - BLACK FROM: 06-23-08 THRU: 99-99-99
4	166950-01-01A	EA	TRIM - FEATURE STRIP - W/O INSERT/END CAPS - 109.1" - MILL
4	105312-01-07A	EA	INSERT - FEATURE STRIP - VINYL - BRIGHT WHITE
4	105312-01-13A	EA	INSERT - FEATURE STRIP - VINYL - BLACK
5	077955-01-000	EA	CLIP/J - 3/8" - VINYL COATED
6	152022-02-02B	EA	BRACKET/MOUNT - CAMERA - E-COATED
7	165951-01-01A	EA	SHROUD - CAMERA - BRIGHT WHITE
7	165951-01-02A	EA	SHROUD - CAMERA - BLACK
7	165951-02-01A	EA	SHROUD - CAMERA - BRIGHT WHITE - 74J
7	165951-02-02A	EA	SHROUD - CAMERA - BLACK - 74J
8	108651-01-03A	EA	END CAP - FEATURE STRIP/RIGHT/LEFT HAND - BRIGHT WHITE FROM: 00-00-00 THRU: 06-22-08
8	091985-01-07A	EA	INSERT - TRIM - REAR CAP TO SIDEWALL - .66" - BRIGHT WHITE FROM: 06-23-08 THRU: 99-99-99
8	108651-01-04A	EA	END CAP - FEATURE STRIP/RIGHT/LEFT HAND - BLACK FROM: 00-00-00 THRU: 06-22-08
8	091985-01-09A	EA	INSERT - TRIM - REAR CAP TO SIDEWALL - .66" - BLACK FROM: 06-23-08 THRU: 99-99-99

COPYRIGHT © 2009 WINNEBAGO INDUSTRIES INC.

EXTERIOR BODY GROUP (CONTINUED)

FRONT END

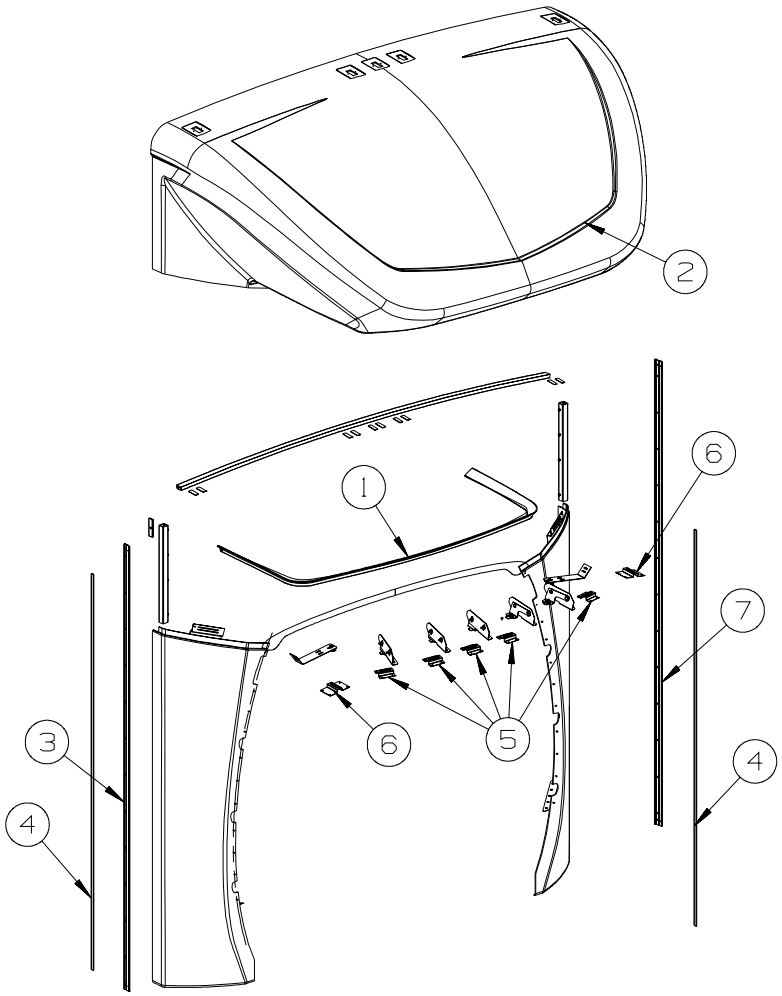

KEY	PART NUMBER	U/M	DESCRIPTION
1	149470-01-000	FT	SEAL/D TYPE - W/LEG
2	165896-01-Y37	EA	PANEL - FRONT W/TRANSITION PANEL/ROOF CAP - BRIGHT WHITE
2	165896-01-AA1	EA	PANEL - FRONT W/TRANSITION PANEL/ROOF CAP - BLACK
3	092041-17-01A	EA	TRIM - FRONT/REAR CAP (SIDEWALL) - 90.8" - BRIGHT WHITE
3	092041-17-02A	EA	TRIM - FRONT/REAR CAP (SIDEWALL) - 90.8" - BLACK
4	091985-01-07A	EA	INSERT - TRIM - REAR CAP TO SIDEWALL - .66" - BRIGHT WHITE
4	091985-01-09A	EA	INSERT - TRIM - REAR CAP TO SIDEWALL - .66" - BLACK
5	143322-01-02B	EA	CHANNEL - HAT - MOUNT/CAP - E-COATED
6	143322-02-02B	EA	CHANNEL - HAT - MOUNT/CAP - E-COATED
7	092041-17-01A	EA	TRIM - FRONT/REAR CAP (SIDEWALL) - 90.8" - BRIGHT WHITE
7	092041-17-02A	EA	TRIM - FRONT/REAR CAP (SIDEWALL) - 90.8" - BLACK
7	092041-18-01A	EA	TRIM - FRONT/REAR CAP (SIDEWALL) - 87" - BRIGHT WHITE
7	092041-18-02A	EA	TRIM - FRONT/REAR CAP (SIDEWALL) - 87" - BLACK

COPYRIGHT © 2009 WINNEBAGO INDUSTRIES INC.

EXTERIOR BODY GROUP (CONTINUED)

MIRRORS

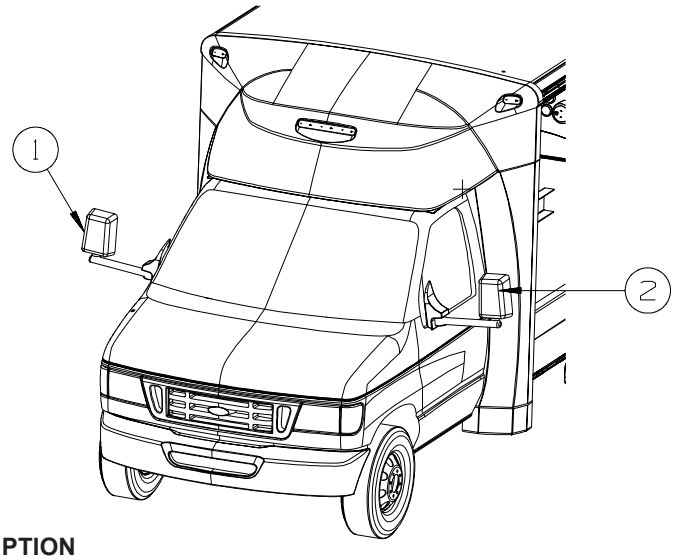

KEY	PART NUMBER	U/M	DESCRIPTION
1*	133908-14-01A	EA	MIRROR/PASSENGER - 96" - BRIGHT WHITE
1*	167450-05-03A	EA	MIRROR/PASS - 96" C BODY/FORD - HEATED/REMOTE - BLK/BLK - 28X
1*	167450-05-02A	EA	MIRROR/PASS - 96" C BODY - HEATED/RMT - BLK/CHR - 28X
2*	133908-15-01A	EA	MIRROR/DRIVER - 96" - WHITE
2*	167450-06-03A	EA	MIRROR/DRVR - 96" C BODY/FORD - HEATED/REMOTE - BLK/BLK - 28X
2*	167450-06-02A	EA	MIRROR/DRVR - 96" C BODY - HEATED/RMT - BLK/CHR - 28X

***COMPONENT PARTS LISTED LATER IN THIS GROUP**

COMPONENT PARTS FOR MIRRORS

133908-05, 133908-06, 133908-10, 133908-11, 133908-14, 133908-15, -01A/02A

KEY	PART NUMBER	U/M	DESCRIPTION	VENDOR NO.
	117051-01-700	EA	MIRROR-CONVEX	723068-4
	120269-01-700	EA	GLASS KIT W/BEZEL RH/LH	709407-8
	133908-03-700	EA	CAP - RECT/BLACK-W/O LIGHT	709557
	133908-04-700	EA	CAP-MIRROR/ROUND - W/O LIGHT	7095470

133908-16, 133908-17, -01A/-02A/-03A

KEY	PART NUMBER	U/M	DESCRIPTION	VENDOR NO.
	086261-01-701	EA	MOTOR-GEAR, MIRROR	747118
	117051-01-700	EA	MIRROR-CONVEX	723068-4
	120269-05-701	EA	GLASS-HTD/REM RH/LH W/CONVEX	709411
	133908-03-700	EA	CAP - RECT/BLACK-W/O LIGHT	709557
	133908-04-700	EA	CAP-MIRROR/ROUND - W/O LIGHT	7095470

167450-05-02A

KEY	PART NUMBER	U/M	DESCRIPTION	VENDOR NO.
	167450-01-702	EA	MIRROR HEAD - RIGHT - CHROME	715998
	167450-01-706	EA	FLAT GLASS KIT-HEATED/RIGHT	716104
	167450-01-707	EA	CONVEX GLASS KIT - RIGHT	716106
	167450-01-710	EA	MOTOR - W/WIRE HARNESS	747832
	167450-01-711	EA	GASKETS(2)-BASE MOUNT-FORD	709743
	167450-01-713	EA	ARM CVR KIT-96" RH & LH-BLK	716107

167450-05-03A

KEY	PART NUMBER	U/M	DESCRIPTION	VENDOR NO.
	167450-01-704	EA	MIRROR HEAD - RIGHT - BLACK	715990
	167450-01-706	EA	FLAT GLASS KIT-HEATED/RIGHT	716104
	167450-01-707	EA	CONVEX GLASS KIT - RIGHT	716106
	167450-01-710	EA	MOTOR - W/WIRE HARNESS	747832
	167450-01-711	EA	GASKETS(2)-BASE MOUNT-FORD	709743
	167450-01-713	EA	ARM CVR KIT-96" RH & LH-BLK	716107

COPYRIGHT © 2009 WINNEBAGO INDUSTRIES INC.

EXTERIOR BODY GROUP (CONTINUED)

COMPONENT PARTS FOR MIRRORS (CONTINUED)

167450-06-02A

KEY	PART NUMBER	U/M	DESCRIPTION	VENDOR NO.
	167450-01-703	EA	MIRROR HEAD - LEFT - CHROME	715997
	167450-01-708	EA	FLAT GLASS KIT - HEATED/LEFT	716103
	167450-01-709	EA	CONVEX GLASS KIT - LEFT	716105
	167450-01-710	EA	MOTOR - W/WIRE HARNESS	747832
	167450-01-711	EA	GASKETS(2)-BASE MOUNT-FORD	709743
	167450-01-713	EA	ARM CVR KIT-96" RH & LH-BLK	716107

167450-06-03A

KEY	PART NUMBER	U/M	DESCRIPTION	VENDOR NO.
	167450-01-705	EA	MIRROR HEAD - LEFT - BLACK	715989
	167450-01-708	EA	FLAT GLASS KIT - HEATED/LEFT	716103
	167450-01-709	EA	CONVEX GLASS KIT - LEFT	716105
	167450-01-710	EA	MOTOR - W/WIRE HARNESS	747832
	167450-01-711	EA	GASKETS(2)-BASE MOUNT-FORD	709743
	167450-01-713	EA	ARM CVR KIT-96" RH & LH-BLK	716107

LADDER

KEY	PART NUMBER	U/M	DESCRIPTION
	129375-02-000	EA	SEAL - LADDER BRACKET
	161113-12-01A	EA	LADDER - 5 STEP - 72.2" - BRUSHED ALUMINUM FROM: 00-00-00 THRU: 08-31-08
	161113-14-01A	EA	LADDER - 7 STEP - 95.8" - BRUSHED ALUMINUM FROM: 09-01-08 THRU: 99-99-99
	150785-11-01A	EA	LADDER - LOWER - 35.4"/3 STEP - HINGED STANDOFF FROM: 00-00-00 THRU: 08-31-08

COPYRIGHT © 2009 WINNEBAGO INDUSTRIES INC.

EXTERIOR BODY GROUP (CONTINUED)
STRUCTURAL COMPONENTS

KEY	PART NUMBER	U/M	DESCRIPTION
	002726-01-001	EA	GARNISH - U-CHANNEL - 1.38" X 19' - SERRATED
			FROM: 00-00-00 THRU: 05-23-08
	089297-01-000	SF	PLYWOOD - LUAN - OVERLAY GRADE - 2.7MM X 4' X 8'
	089297-05-000	SF	PLYWOOD - LUAN - OVERLAY GRADE - 3.4MM X 4' X 8'
			FROM: 09-08-08 THRU: 99-99-99
	100619-B3-000	BF	FOAM - EXPANDED POLYSTYRENE - .42" X 48" X 96"
	100619-B5-000	BF	FOAM - EXPANDED POLYSTYRENE - 3" X 24" X 88.4"
	100619-01-000	BF	FOAM - EXPANDED POLYSTYRENE - 1.34" X 48" X 96"
	100619-02-000	BF	FOAM - EXPANDED POLYSTYRENE - 1.5" X 48" X 96"
			FROM: 00-00-00 THRU: 09-21-08
	100619-04-000	BF	FOAM - EXPANDED POLYSTYRENE - .5" X 48" X 96"
	100619-05-000	BF	FOAM - EXPANDED POLYSTYRENE - .75" X 48" X 96"-1.5"DENSITY
	100619-16-000	BF	FOAM - EXPANDED POLYSTYRENE - .75" X 48" X 96"-2" DENSITY
	100619-21-000	BF	FOAM - EXPANDED POLYSTYRENE - .75" X 48" X .143"
	100619-22-000	BF	FOAM - EXPANDED POLYSTYRENE - 1.34" X 48" X 120"
	100619-50-000	BF	FOAM - EXPANDED POLYSTYRENE - 3" X 48" X 88.4"
	116942-03-01A	LB	ALUMINUM - .7" X 40" X 158"
	120107-01-000	EA	FOAM - ROOF COVE - 2.8" X 48" LONG
			FROM: 05-04-09 THRU: 99-99-99
	120107-02-000	EA	FOAM - PLUG - ROOF TUBE - 2.2" X 2.9" X 1.8" LONG
	120107-03-000	EA	FOAM - PLUG - SIDEWALL TUBE - 1.2" X 2.1" X 1.8" LONG
	120107-07-000	EA	FOAM - ROOF COVE
			FROM: 00-00-00 THRU: 05-03-09
	128782-26-01A	EA	FIBERGLASS SHEET - 26.1" X 69.3" - HIGH GLOSS - BRT WHITE
			FROM: 00-00-00 THRU: 05-04-08
	128782-32-01A	EA	FIBERGLASS SHEET - 92.7" X 266" - HIGH GLOSS - BRT WHITE
	128782-33-01A	EA	FIBERGLASS SHEET - 16.8" X 266" - HIGH GLOSS - BRT WHITE
			FROM: 00-00-00 THRU: 11-09-08
	151523-01-02A	EA	CEILING PANEL - 48" X 97.1" - VINYL/FOAM/LUAN - SPINDRIFT
	162931-15-01A	EA	FIBERGLASS SHEET - 4" X 93.8" - BRIGHT WHITE
	162931-17-01A	EA	FIBERGLASS SHEET - 47.9" X 95.8" - BRIGHT WHITE
	162931-27-01A	EA	FIBERGLASS SHEET - 11.4" X 69.6" - BRIGHT WHITE
	162931-33-01A	EA	FIBERGLASS SHEET - 30.9" X 69.3" - BRIGHT WHITE
	162931-36-01A	EA	FIBERGLASS SHEET - 22" X 69.3" - BRIGHT WHITE
			FROM: 04-07-09 THRU: 99-99-99
	162931-37-01A	EA	FIBERGLASS SHEET - 26.1" X 69.3" - BRIGHT WHITE
			FROM: 00-00-00 THRU: 05-04-08
	162931-38-01A	EA	FIBERGLASS SHEET - 92.7" X 266" - BRIGHT WHITE
	162931-39-01A	EA	FIBERGLASS SHEET - 26.1" X 54.4" - BRIGHT WHITE
	162931-41-01A	EA	FIBERGLASS SHEET - 26.1" X 47.8" - BRIGHT WHITE
	162931-42-01A	EA	FIBERGLASS SHEET - 22" X 66.7" - BRIGHT WHITE
			FROM: 03-24-08 THRU: 04-06-09
	170322-27-01A	EA	FIBERGLASS SHEET - 22" X 69.3" - HIGH GLOSS - BRT WHITE
	170322-27-02A	EA	FIBERGLASS SHEET - 22" X 69.3" - UNFINISHED
	170322-28-01A	EA	FIBERGLASS SHEET - 30.9" X 69.3" - HIGH GLOSS - BRT WHITE
	170322-30-01A	EA	FIBERGLASS SHEET - 31.1" X 76" - HIGH GLOSS - BRT WHITE
	170322-32-01A	EA	FIBERGLASS SHEET - 92.7" X 266" - HIGH GLOSS - BRT WHITE
	170322-32-02A	EA	FIBERGLASS SHEET - 92.7" X 266" - GRAY SAND GEL - 93A
			FROM: 11-10-08 THRU: 99-99-99
	170322-33-01A	EA	FIBERGLASS SHEET - 16.8" X 266" - HIGH GLOSS - BRT WHITE
			FROM: 11-10-08 THRU: 99-99-99
	170322-36-01A	EA	FIBERGLASS SHEET - 26.1" X 54.4" - HIGH GLOSS - BRT WHITE
	170322-42-01A	EA	FIBERGLASS SHEET - 26.1" X 47.8" - HIGH GLOSS - BRT WHITE

COPYRIGHT © 2009 WINNEBAGO INDUSTRIES INC.

EXTERIOR BODY GROUP (CONTINUED)

AWNINGS

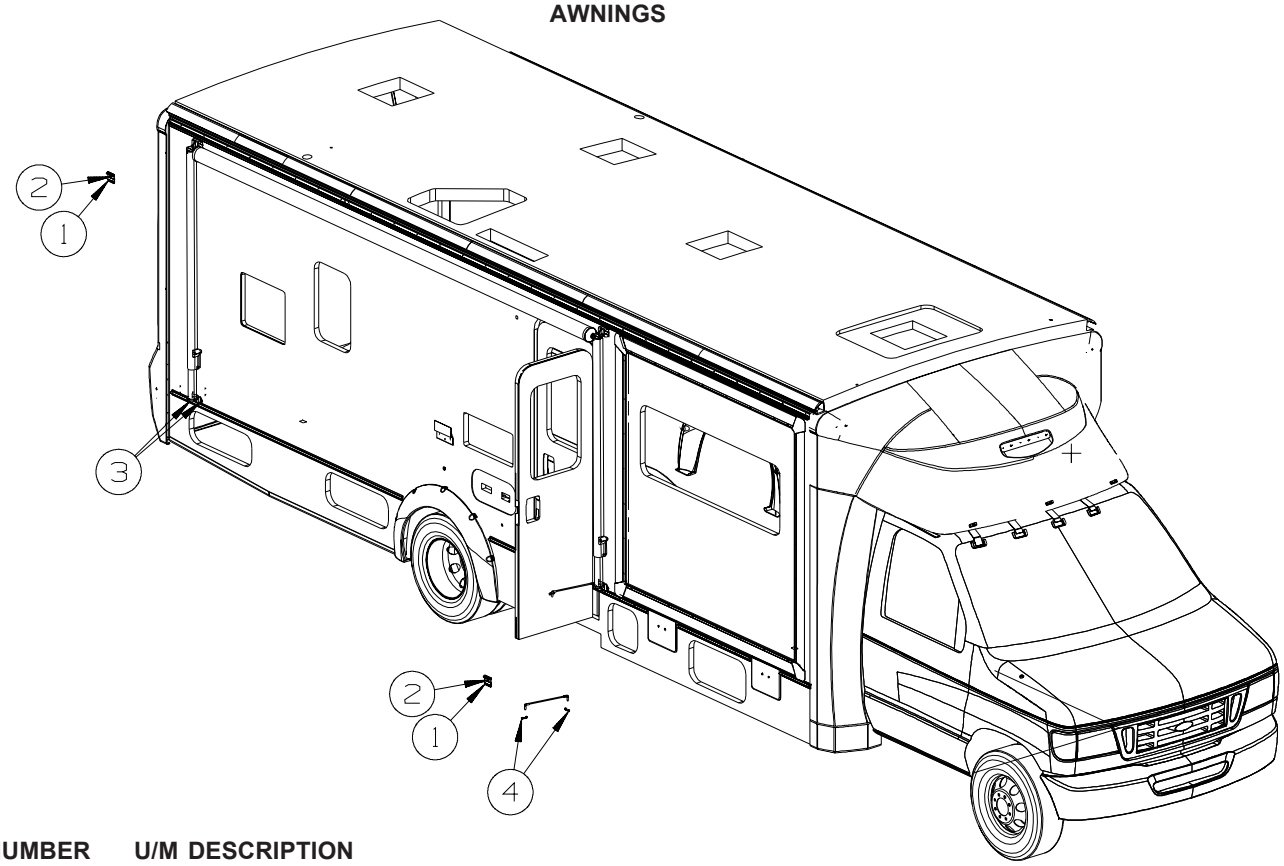

KEY	PART NUMBER	U/M	DESCRIPTION
1	161739-01-02A	EA	BRACKET - AWNING - BRIGHT WHITE
1	161739-01-01A	EA	BRACKET - AWNING - BLACK
2	113874-12-01A	EA	LAG SCREW - AWNING - 1/4" X 2 3/4" STAINLESS STEEL
3	113874-11-01A	EA	LAG SCREW - AWNING - 1/4" X 1" STAINLESS STEEL
4	127960-01-01A	EA	RETAINER - EYE - 3/8" - STAINLESS STEEL
4	127647-03-01A	EA	ROD/AWNING GUARD - ENTRY DOOR - 19.4" LONG

ORDER AWNINGS & REPAIR PARTS FROM DOMETIC AT #800-366-3842 OR CAREFREE AT #800-621-2617 OR ONLINE AT WWW.E-CAREFREE.COM.
THE AWNING INFORMATION YOU WILL NEED IS LOCATED ON THE MOTOR HOME NEAR THE TOP OF THE AWNING RAIL.

COPYRIGHT © 2009 WINNEBAGO INDUSTRIES INC.

EXTERIOR DOORS & COMPARTMENTS GROUP

DOOR & COMPARTMENT LAYOUT

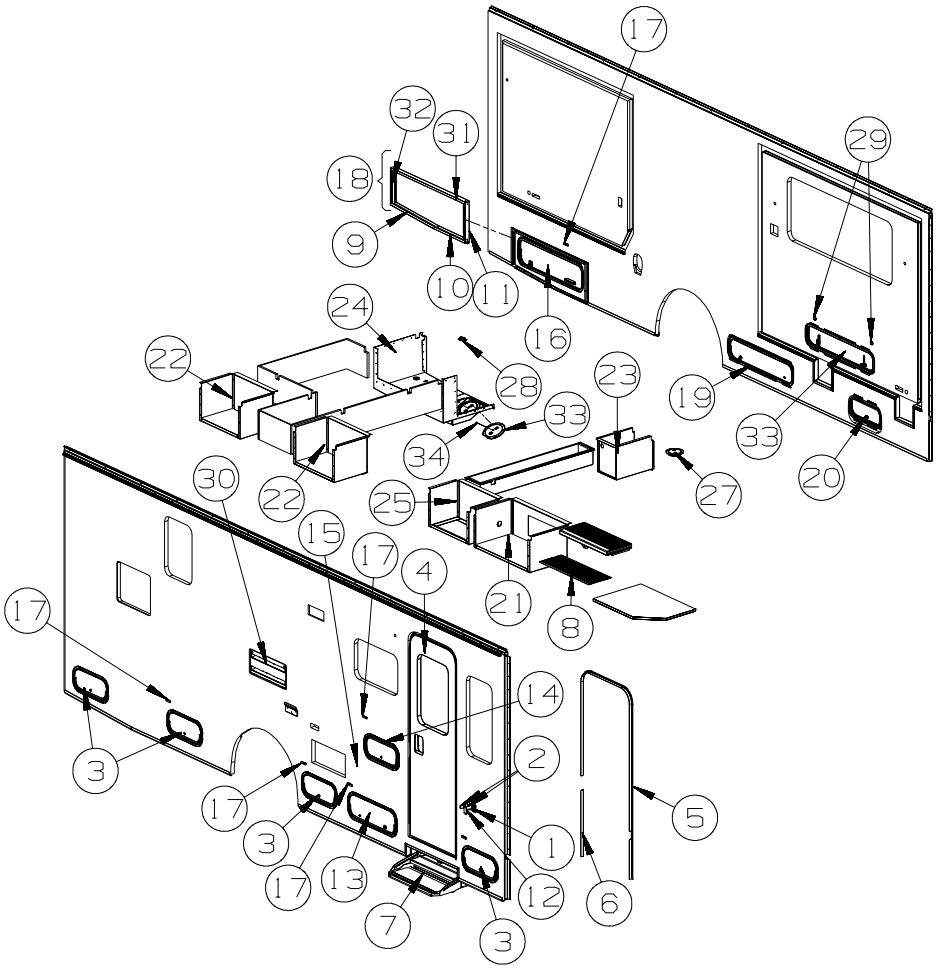

KEY	PART NUMBER	U/M	DESCRIPTION
1	104099-02-05A	EA	CATCH/RETAINER - DOOR HOLDER - BLACK
2	117046-02-000	EA	BUMPER - RUBBER/ROUND END - 1.5"
3	166903-01-Y37	EA	DOOR/STORAGE - W/O HDW - 18"W X 8.3"H - WHITE
3	166903-01-AA1	EA	DOOR/STORAGE - W/O HDW - 18"W X 8.3"H - BLACK
3	166903-02-Y37	EA	DOOR/STORAGE - W/O HDW - 18"W X 8.3"H - WHITE - 64V
3	166903-02-AA1	EA	DOOR/STORAGE - W/O HDW - 18"W X 8.3"H - BLACK - 64V
4	P32206-15-Y37	EA	DOOR - ENTRY W/SCREEN DOOR - W/O WINDOW/LATCH - BRIGHT WHITE (Y37, Y38)
4	P32206-15-Y39	EA	DOOR - ENTRY W/SCREEN DOOR - W/O WINDOW/LATCH - BRIGHT WHITE (Y39, Y40)
4	P32206-15-Y41	EA	DOOR - ENTRY W/SCREEN DOOR - W/O WINDOW/LATCH - BRIGHT WHITE (Y41, Y42)
4	P32206-22-Y37	EA	DOOR - ENTRY W/SCREEN DOOR - W/O WINDOW/LATCH - BRIGHT WHITE (Y37, Y38) - 64V
4	P32206-22-Y39	EA	DOOR - ENTRY W/SCREEN DOOR - W/O WINDOW/LATCH - BRIGHT WHITE (Y39, Y40) - 64V
4	P32206-22-Y41	EA	DOOR - ENTRY W/SCREEN DOOR - W/O WINDOW/LATCH - BRIGHT WHITE (Y41, Y42) - 64V
4	M09574-01-Y37	EA	DOOR - ENTRY W/SCREEN DOOR - W/O WINDOW/LATCH - BLACK (Y37, Y38) - 64V
4	M09574-01-Y39	EA	DOOR - ENTRY W/SCREEN DOOR - W/O WINDOW/LATCH - BLACK (Y39, Y40) - 64V
4	M09574-01-Y41	EA	DOOR - ENTRY W/SCREEN DOOR - W/O WINDOW/LATCH - BLACK (Y41, Y42) - 64V
	138897-01-000	EA	SWITCH - 2 PIN/SPRING LOADED CONTACTS (EA=1 SWITCH)

COPYRIGHT © 2009 WINNEBAGO INDUSTRIES INC.

EXTERIOR DOORS & COMPARTMENTS GROUP (CONTINUED)

DOORS & COMPARTMENTS LAYOUT (CONTINUED)

KEY	PART NUMBER	U/M	DESCRIPTION
ENTRY DOOR LOCK CYLINDERS			
	138287-11-000	EA	CYLINDER/LOCK - ENTRY DOOR - MASTER W/3M ICON - (3041)
	138287-12-000	EA	CYLINDER/LOCK - ENTRY DOOR - MASTER W/3M ICON - (3042)
	138287-13-000	EA	CYLINDER/LOCK - ENTRY DOOR - MASTER W/3M ICON - (3043)
	138287-14-000	EA	CYLINDER/LOCK - ENTRY DOOR - MASTER W/3M ICON - (3044)
	138287-15-000	EA	CYLINDER/LOCK - ENTRY DOOR - MASTER W/3M ICON - (3045)
	138287-16-000	EA	CYLINDER/LOCK - ENTRY DOOR - MASTER W/3M ICON - (3046)
	138287-17-000	EA	CYLINDER/LOCK - ENTRY DOOR - MASTER W/3M ICON - (3047)
	138287-18-000	EA	CYLINDER/LOCK - ENTRY DOOR - MASTER W/3M ICON - (3048)
	138287-19-000	EA	CYLINDER/LOCK - ENTRY DOOR - MASTER W/3M ICON - (3049)
	138287-20-000	EA	CYLINDER/LOCK - ENTRY DOOR - MASTER W/3M ICON - (3050)
	138288-11-000	EA	KEY - REVERSIBLE - #3041 - T/M 16169-02-3041
	138288-12-000	EA	KEY - REVERSIBLE - #3042 - T/M 16169-02-3042
	138288-13-000	EA	KEY - REVERSIBLE - #3043 - T/M 16169-02-3043
	138288-14-000	EA	KEY - REVERSIBLE - #3044 - T/M 16169-02-3044
	138288-15-000	EA	KEY - REVERSIBLE - #3045 - T/M 16169-02-3045
	138288-16-000	EA	KEY - REVERSIBLE - #3046 - T/M 16169-02-3046
	138288-17-000	EA	KEY - REVERSIBLE - #3047 - T/M 16169-02-3047
	138288-18-000	EA	KEY - REVERSIBLE - #3048 - T/M 16169-02-3048
	138288-19-000	EA	KEY - REVERSIBLE - #3049 - T/M 16169-02-3049
	138288-20-000	EA	KEY - REVERSIBLE - #3050 - T/M 16169-02-3050
	138292-01-000	EA	SEAL - LOCK CYLINDER
VALANCE DOOR LOCK CYLINDERS			
	138637-51-000	EA	KEYS - SET OF TWO
	138637-51-001	EA	KEYS - SET OF TWO
	138637-51-002	EA	KEYS - SET OF TWO
	138637-51-003	EA	KEYS - SET OF TWO
	138637-51-004	EA	KEYS - SET OF TWO
	138637-51-005	EA	KEYS - SET OF TWO
	138637-51-006	EA	KEYS - SET OF TWO
	138637-51-007	EA	KEYS - SET OF TWO
	138637-51-008	EA	KEYS - SET OF TWO
	138637-51-009	EA	KEYS - SET OF TWO
5	139101-02-01A	EA	GARNISH/STRAIGHT - 24.9" - BRIGHT WHITE
5	139101-02-03A	EA	GARNISH/STRAIGHT - ENTRY DOOR - BLACK
6	139100-08-01A	EA	GARNISH/RADIUS - ENTRY DOOR - BRIGHT WHITE
6	139100-08-02A	EA	GARNISH/RADIUS - ENTRY DOOR - BLACK
7	139748-04-04B	EA	STEP/PULLOUT - W/BRACKETS - BLACK
	102569-04-000	EA	MAT - ANTI SLIP
7*	094708-05-01A	EA	STEP - ELECTRIC - SINGLE - BLACK - KWIKEE - 1E2
	116975-01-01A	EA	LATCH - W/O STRIKE - BLACK - NEW STYLE
8	133114-03-01A	EA	TREAD - STEP/RUBBER - 27.1" X 10.1" - TAUPE
9	168159-40-02A	EA	TRIM - SIDEWALL/BOTTOM - 24.2" - BLACK
10	168159-41-02A	EA	TRIM - SIDEWALL/BOTTOM - 17" - BLACK
11	156995-03-02A	EA	TRIM - SIDEWALL - U CHANNEL - 1.8" X 15.3" - BLACK
12	104099-01-05A	EA	CATCH - DOOR HOLDER - STRIKE - 3.9" - BLACK
13	166905-03-AA1	EA	DOOR/STORAGE - W/O HDW - 25.6"W X 8.5"H
13	166905-04-AA1	EA	DOOR/STORAGE - W/O HDW - 25.6"W X 8.9"H - 64V
14	126945-15-S34	EA	DOOR/STORAGE - W/O HARDWARE - 18" X 8.3" - BRIGHT WHITE
14	126945-24-AA2	EA	DOOR/STORAGE - W/O HARDWARE - 18" X 8.3" - BRIGHT WHITE - 64V
14	126945-24-AA1	EA	DOOR/STORAGE - W/O HARDWARE - 18" X 8.3" - BLACK - 64V
15	142034-02-01A	EA	SHELF - F/EXTERIOR TV - BRIGHT WHITE
16	166905-07-AA1	EA	DOOR/STORAGE - W/O HDW - 35.9"W X 10.6"H
16	166905-08-AA1	EA	DOOR/STORAGE - W/O HDW - 35.9"W X 10.6"H - 64V
17	102768-01-000	EA	HOLDER - COMPARTMENT/ENTRY DOOR - METAL - MILL FINISH
18	166878-03-Y37	EA	PANEL - REMOVABLE - W/O HDW (Y37, Y38)
18	166878-03-Y39	EA	PANEL - REMOVABLE - W/O HDW (Y39, Y40)
18	166878-03-Y41	EA	PANEL - REMOVABLE - W/O HDW (Y41, Y42)
18	166878-04-Y37	EA	PANEL - REMOVABLE - W/O HDW (Y37, Y38) - 64V
18	166878-04-Y39	EA	PANEL - REMOVABLE - W/O HDW (Y39, Y40) - 64V
18	166878-04-Y41	EA	PANEL - REMOVABLE - W/O HDW (Y41, Y42) - 64V

COPYRIGHT © 2009 WINNEBAGO INDUSTRIES INC.

EXTERIOR DOORS & COMPARTMENTS GROUP (CONTINUED)

DOORS & COMPARTMENTS LAYOUT (CONTINUED)

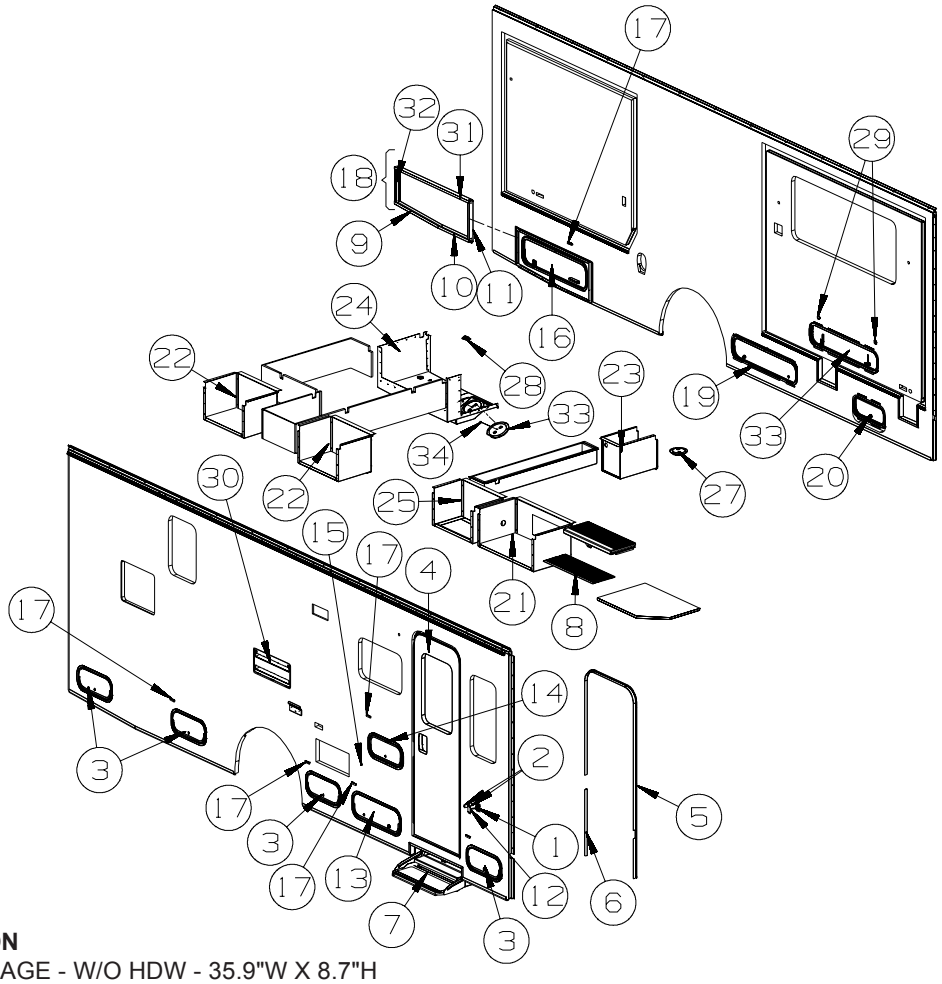

KEY	PART NUMBER	U/M	DESCRIPTION
19	166905-05-AA1	EA	DOOR/STORAGE - W/O HDW - 35.9"W X 8.7"H
19	166905-06-AA1	EA	DOOR/STORAGE - W/O HDW - 35.9"W X 8.7"H - 64V
20	166903-09-Y37	EA	DOOR/STORAGE - W/O HDW - 18"W X 8.3"H - BRIGHT WHITE
20	166903-10-Y37	EA	DOOR/STORAGE - W/O HDW - 18"W X 8.3"H - BRIGHT WHITE - 64V
20	166903-10-AA1	EA	DOOR/STORAGE - W/O HDW - 18"W X 8.3"H - BLACK - 64V
21	149311-03-02B	EA	COMPARTMENT/STORAGE - E-COATED
22	149313-02-02B	EA	COMPARTMENT - STORAGE - E-COATED
23	148015-01-02B	EA	COMPARTMENT - POWER CORD - E-COATED
			FROM: 00-00-00 THRU: 06-02-08
23	148015-03-02B	EA	COMPARTMENT - POWER CORD - E-COATED
			FROM: 06-03-08 THRU: 99-99-99
24	137989-07-02B	EA	COMPARTMENT - SEWER - E-COATED
25	149313-02-02B	EA	COMPARTMENT - STORAGE - E-COATED
			FROM: 00-00-00 THRU: 08-25-08
25	170244-01-02B	EA	COMPARTMENT - STORAGE - E-COATED
			FROM: 08-26-08 THRU: 99-99-99
26	166905-09-Y37	EA	DOOR/STORAGE - W/O HDW - 37.8"W X 8.3"H - BRIGHT WHITE
26	166905-10-Y37	EA	DOOR/STORAGE - W/O HDW - 37.8"W X 8.3"H - BRIGHT WHITE - 64V
26	166905-10-AA1	EA	DOOR/STORAGE - W/O HDW - 37.8"W X 8.3"H - BLACK - 64V
27	092887-03-000	EA	HATCH/PLATE - 6.1" FLANGE/4.5" R.O. - BLACK
			FROM: 06-03-08 THRU: 99-99-99
28	153718-01-01A	EA	LATCH - HOLD DOWN PANEL - STAINLESS STEEL
29	120760-01-000	EA	RUBBER BUMPER - CLEAR - .1" THICK X .8" DIAMETER
30*	084103-08-000	EA	DOOR - VENT - REFRIGERATOR - W/O JAMB - BRIGHT WHITE
30	084104-08-000	EA	JAMB - VENT DOOR/REFRIGERATOR - BRIGHT WHITE
31	156963-03-02A	EA	TRIM - SIDEWALL - U CHANNEL - 41.1" - BLACK
32	156995-04-02A	EA	TRIM - SIDEWALL - U CHANNEL - 1.8" X 13.8" - BLACK
33	092887-02-000	EA	HATCH/PLATE - 7.4" FLANGE/6.5" R.O. - BLACK
			FROM: 08-29-08 THRU: 99-99-99
	092887-01-000	EA	HATCH/PLATE - 8.2" FLANGE/6.5" R.O. - BLACK

COPYRIGHT © 2009 WINNEBAGO INDUSTRIES INC.

EXTERIOR DOORS & COMPARTMENTS GROUP (CONTINUED)

DOORS & COMPARTMENTS LAYOUT (CONTINUED)

KEY	PART NUMBER	U/M	DESCRIPTION
34	076767-16-000	EA	CABLE - STAINLESS STEEL - 9.8"
			FROM: 08-29-08 THRU: 99-99-99
	153529-01-02B	EA	DOOR - SUMP - E-COATED
			FROM: 00-00-00 THRU: 08-28-08
	140922-02-02B	EA	RETAINER - MUD FLAP - 1" X 14.5" - E-COATED
			FROM: 00-00-00 THRU: 08-28-08
	017516-10-000	EA	MUD FLAP - 3.9"H X 14.9"W - RUBBER - BLACK
			FROM: 00-00-00 THRU: 08-28-08

***COMPONENT PARTS LISTED LATER IN THIS GROUP**

COPYRIGHT © 2009 WINNEBAGO INDUSTRIES INC.

EXTERIOR DOORS & COMPARTMENTS GROUP (CONTINUED)

DOORS & COMPARTMENTS LAYOUT (CONTINUED)

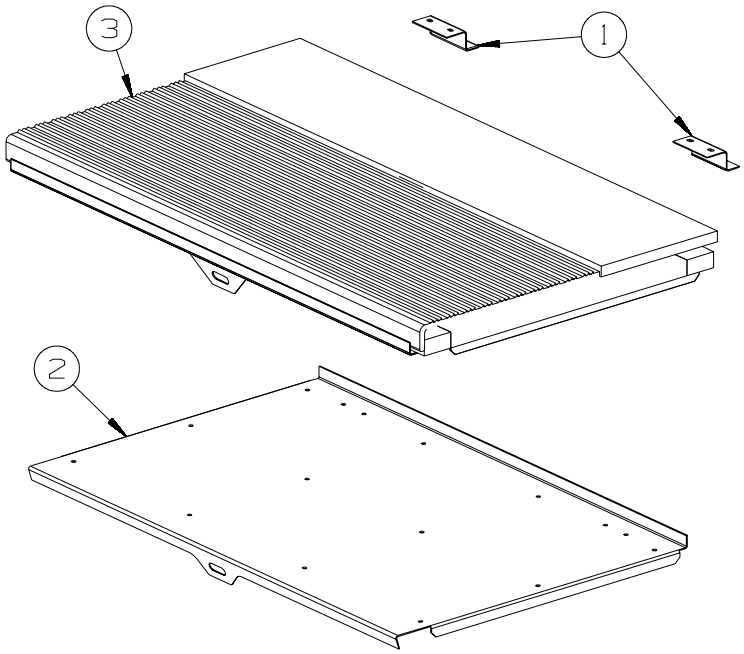

FROM: 00-00-00 THRU: 05-07-08

KEY	PART NUMBER	U/M	DESCRIPTION
1	146747-01-02B	EA	BRACKET/CATCH - E-COATED
2	123330-08-02B	EA	SUPPORT - ENTRY STEP - E-COATED
3	147781-01-01A	EA	TREAD/STEP - RUBBER - TAUPE

FROM: 05-08-08 THRU: 99-99-99

KEY	PART NUMBER	U/M	DESCRIPTION
1	146747-01-02B	EA	BRACKET/CATCH - E-COATED
2	123330-05-02B	EA	SUPPORT - ENTRY STEP - E-COATED
3	147781-01-01A	EA	TREAD/STEP - RUBBER - TAUPE

COMPONENT PARTS FOR DOOR & COMPARTMENT LAYOUT

084103-08-000

KEY	PART NUMBER	U/M	DESCRIPTION	VENDOR NO.
	084104-01-700	EA	LOCK-MALE, FASTENER	201-721-010
	084104-01-701	EA	LOCK-FEMALE, FASTENER	201-802-010

COPYRIGHT © 2009 WINNEBAGO INDUSTRIES INC.

EXTERIOR DOORS & COMPARTMENTS GROUP (CONTINUED)

COMPONENT PARTS FOR DOOR & COMPARTMENT LAYOUT (CONTINUED)

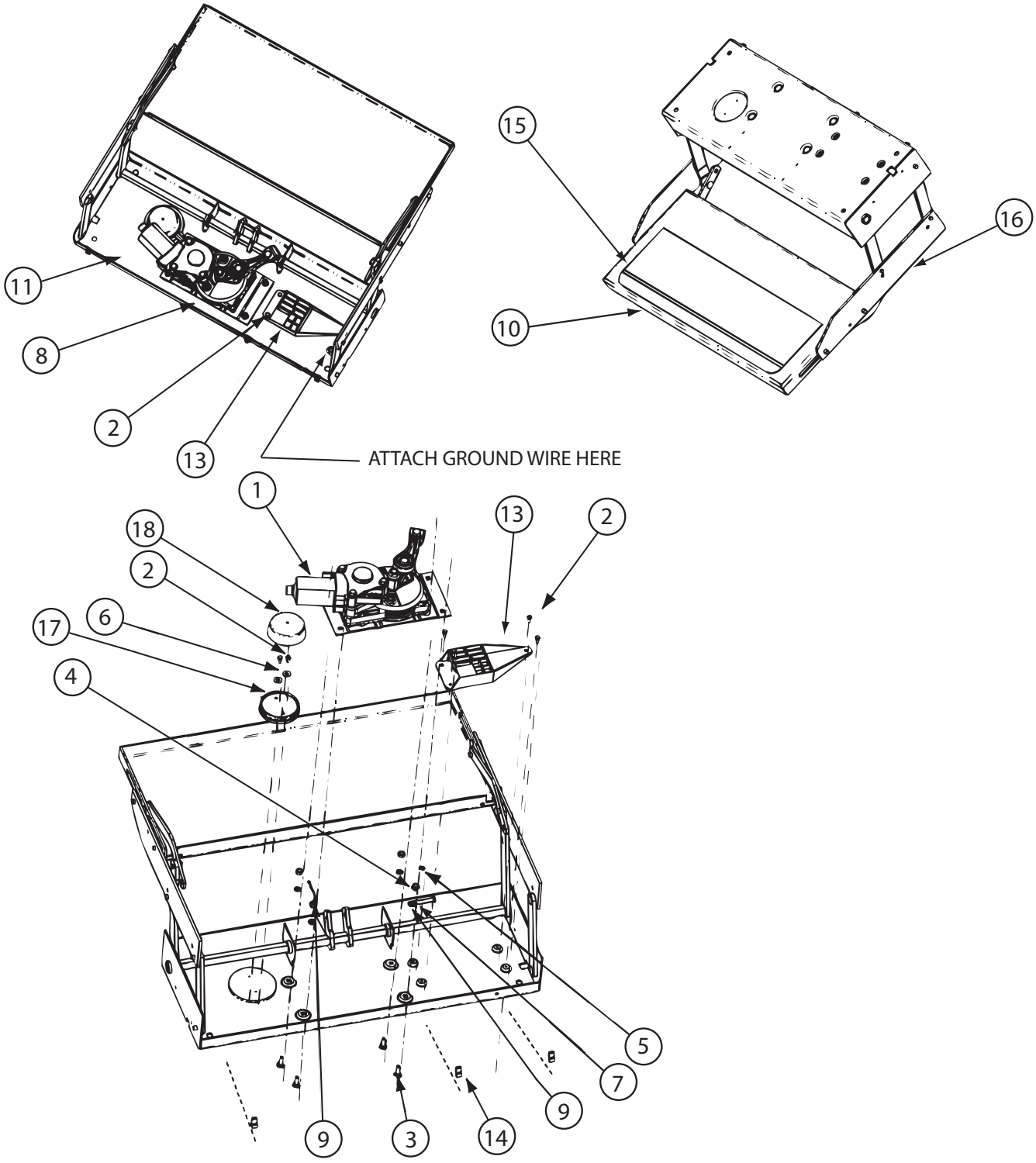

094708-05-01A

KEY	PART NUMBER	U/M	DESCRIPTION	VENDOR NO.
1	094707-04-701	EA	MOTOR “AM 214” F/IMGL STEPS	1101428
13	094707-04-700	EA	CONTROL UNIT W/OVERRIDE	909510000
15	143709-01-702	EA	TREAD/NON-SKID 6" X 21" BLK	1915260
16	094708-05-701	EA	FRAME W/SGL STEP,28 SERIES	908028000
17	088746-01-705	EA	LIGHT-UNDER STEP	9004
	094707-03-701	EA	PLUG - 4-WAY - PACKARD	909306
	094707-04-702	EA	COTTER PIN - W/CLEVIS PIN	905205000
	094707-04-711	EA	KWIKTEST - W/4-WAY PIGTAIL	909518000
	094708-05-700	EA	GEAR BOX W/LINKAGE-STRAIGHT	1101426

CONTACT WINNEBAGO PART SALES FOR UNLISTED COMPONENT(S)

COPYRIGHT © 2009 WINNEBAGO INDUSTRIES INC.

EXTERIOR DOORS & COMPARTMENTS GROUP (CONTINUED)

COMPARTMENT DOOR PIECE PARTS

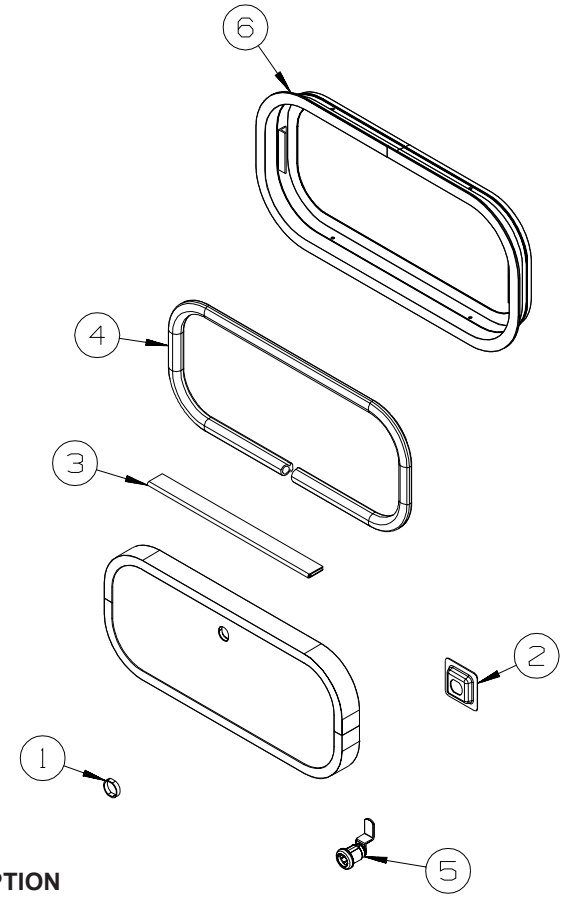

126945
DOOR
STORAGE

KEY	PART NUMBER	U/M	DESCRIPTION
1	139325-01-000	EA	SPACER - LOCK - 6MM
	139337-01-000	EA	GASKET - LOCK
2	097111-02-05A	EA	POCKET - LOCK - REAR DOOR - BRIGHT WHITE
2	097111-02-04A	EA	POCKET - LOCK - REAR DOOR - BLACK
3	081801-V3-000	EA	HINGE - DOOR - PIANO - 2" X 96" - BRIGHT WHITE
3	081801-FN-000	EA	HINGE - DOOR - PIANO - 2" X 96" - BLACK
4	156386-01-01A	FT	SEAL - BULB - .4" X .5" - W/ADHESIVE BACK
4	112160-02-000	FT	SEAL - D SECTION - .2 X .3" - FOAM RUBBER - NOT ILLUSTRATED
5	138290-02-000	EA	CASE - W/CAM - W/O CYLINDER/KEY
6	056795-01-000	FT	TAPE/SEAL - 1/8" X 3/8" WIDE - PRESS ON

COPYRIGHT © 2009 WINNEBAGO INDUSTRIES INC.

EXTERIOR DOORS & COMPARTMENTS GROUP (CONTINUED)

COMPARTMENT DOOR PIECE PARTS (CONTINUED)

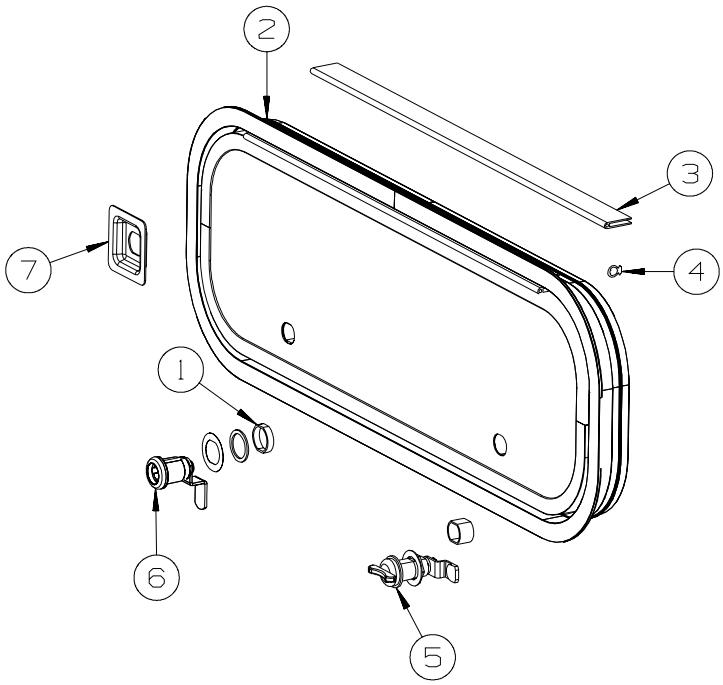

166905 STORAGE DOOR

KEY	PART NUMBER	U/M	DESCRIPTION
1	144734-01-000	EA	SPACER - COMPARTMENT DOOR LOCK - 9/16" DEEP
1	139325-01-000	EA	SPACER - LOCK - 6MM - TRI/MARK KEY ONE
	139337-01-000	EA	GASKET - LOCK - TRI/MARK KEY ONE
2	056795-01-000	FT	TAPE-SEAL, 1/8" X 3/8" WIDE - PRESS ON
3	081801-V3-000	EA	HINGE - DOOR - PIANO - 2" X 96" - BRIGHT WHITE
3	081801-FN-000	EA	HINGE - DOOR - PIANO - 2" X 96" - BLACK
4	156386-01-01A	FT	SEAL - BULB - .4" X .5" - W/ADHESIVE BACK
5	138290-02-000	EA	CASE - W/CAM - W/O CYLINDER/KEY - TRI/MARK KEY ONE
6	110506-40-000	EA	CLIP-E, LOCK ASM - BRIGGS & STRATTON 93981
6	110506-41-000	EA	WASHER-TENSION LOCK ASM - BRIGGS & STRATTON 37512
6	110506-42-000	EA	NUT-LOCK ASM - BRIGGS & STRATTON 310878
6	110506-43-000	EA	WASHER-FLAT, LOCK ASM - BRIGGS & STRATTON 82089
6	110506-44-000	EA	GASKET-LOCK ASM - BRIGGS & STRATTON - #47701
6	110506-55-000	EA	CASE/CYLINDER - TWIST LOCK - W/O CAM - 1.25" - 597312AA1 - TWIST LOCK
6	110506-66-000	EA	CAM - LATCHING - DOG LEG - 1.5" LONG - TWIST LOCK
7	097111-02-04A	EA	POCKET - LOCK - REAR DOOR - BLACK - TRI/MARK KEY ONE

COPYRIGHT © 2009 WINNEBAGO INDUSTRIES INC.

EXTERIOR DOORS & COMPARTMENTS GROUP (CONTINUED)

COMPARTMENT DOOR PIECE PARTS (CONTINUED)

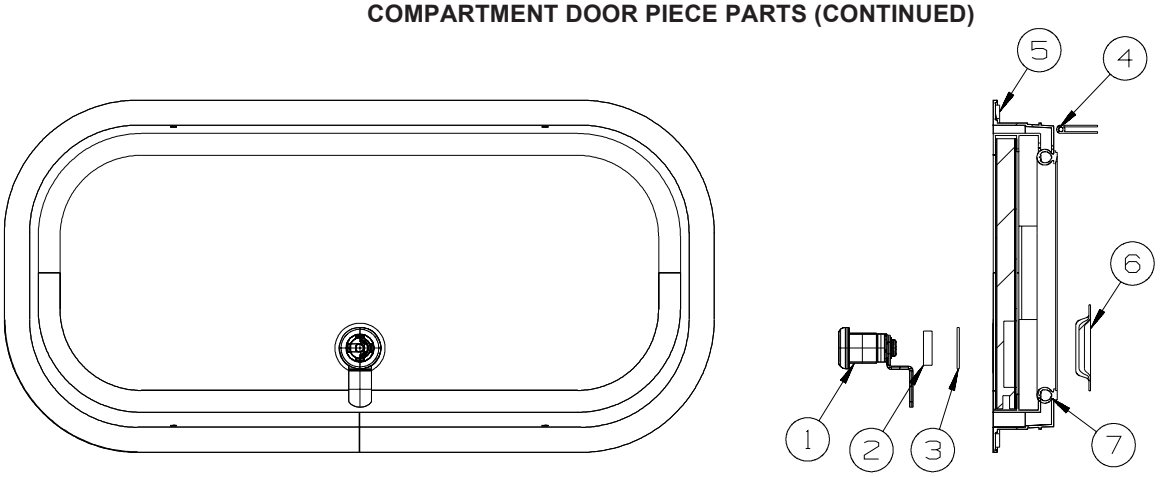

166903 STORAGE DOOR

KEY	PART NUMBER	U/M	DESCRIPTION
1	138290-02-000	EA	CASE - W/CAM - W/O CYLINDER/KEY
2	139325-01-000	EA	SPACER - LOCK - 6MM
3	139337-01-000	EA	GASKET - LOCK
4	081801-V3-000	EA	HINGE - DOOR - PIANO - 2" X 96" - BRIGHT WHITE
4	081801-FN-000	EA	HINGE - DOOR - PIANO - 2" X 96" - BLACK
5	056795-01-000	FT	TAPE/SEAL - 1/8" X 3/8" WIDE - PRESS ON
6	097111-02-04A	EA	POCKET - LOCK - REAR DOOR - BLACK
7	156386-01-01A	FT	SEAL - BULB - .4" X .5" - W/ADHESIVE BACK

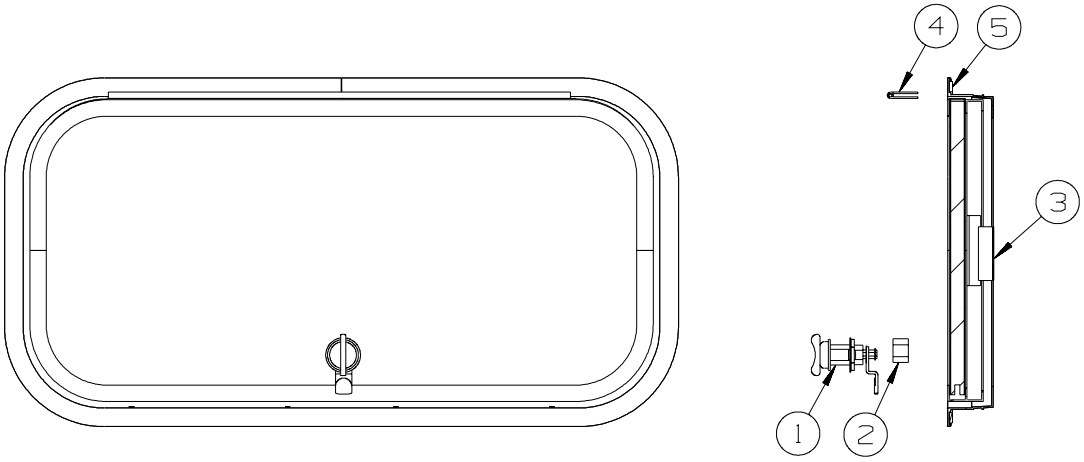

166903 STORAGE DOOR

KEY	PART NUMBER	U/M	DESCRIPTION
1	110506-40-000	EA	CLIP-E, LOCK ASM - BRIGGS & STRATTON 93981
1	110506-41-000	EA	WASHER-TENSION LOCK ASM - BRIGGS & STRATTON 37512
1	110506-42-000	EA	NUT-LOCK ASM - BRIGGS & STRATTON 310878
1	110506-43-000	EA	WASHER-FLAT, LOCK ASM - BRIGGS & STRATTON 82089
1	110506-44-000	EA	GASKET-LOCK ASM - BRIGGS & STRATTON - #47701
1	110506-55-000	EA	CASE/CYLINDER - TWIST LOCK - W/O CAM - 1.25" - 597312AA1
1	110506-66-000	EA	CAM - LATCHING - DOG LEG - 1.5" LONG
2	144734-01-000	EA	SPACER - COMPARTMENT DOOR LOCK - 9/16" DEEP
3	156386-01-01A	FT	SEAL - BULB - .4" X .5" - W/ADHESIVE BACK
4	081801-V3-000	EA	HINGE - DOOR - PIANO - 2" X 96" - BRIGHT WHITE
4	081801-FN-000	EA	HINGE - DOOR - PIANO - 2" X 96" - BLACK
5	056795-01-000	FT	TAPE/SEAL - 1/8" X 3/8" WIDE - PRESS ON

COPYRIGHT © 2009 WINNEBAGO INDUSTRIES INC.

EXTERIOR DOORS & COMPARTMENTS GROUP (CONTINUED)

ENTRY

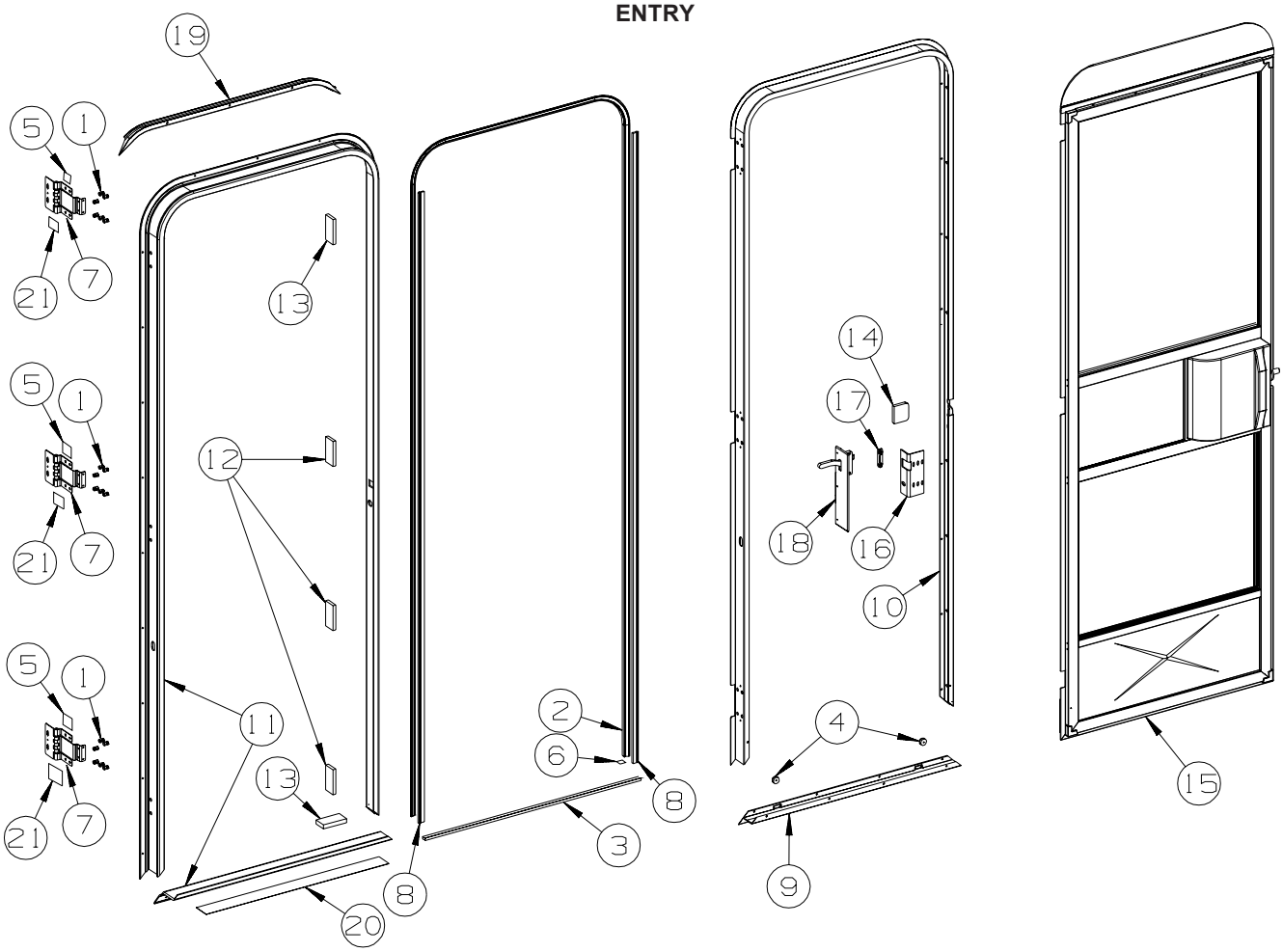

KEY	PART NUMBER	U/M	DESCRIPTION
1	039715-01-000	EA	NUT-SERT - 1/4" DIAMETER - 20 THREADS
2	075671-04-000	FT	SEAL - SPONGE - LAZY T - W/ADHESIVE STRIP - .5" WIDE
3	075673-05-000	FT	SEAL/PILE - .5" HIGH W/ADHESIVE BACK - BLACK
4	081914-02-000	EA	BUMPER - RUBBER - ROUND - 5/16" DIA. X 13/64" THICK
5	100128-02-000	FT	SEAL - FOAM/ADHESIVE BACK - .37" WIDE X .37" THICK X 60’
6	104692-01-000	FT	SEAL - ADHESIVE BACKED FOAM - 3/4" THICK X 3/4" WIDE X 25'
7	106719-01-05A	EA	HINGE - ENTRY DOOR - BRIGHT WHITE
7	106719-01-08A	EA	HINGE - ENTRY DOOR - BLACK
8	118929-01-01A	FT	SEAL - PILE - PUSH ON
9	121893-01-01A	EA	FRAME - ENTRY DOOR/BOTTOM - BRIGHT WHITE
9	121893-01-04A	EA	FRAME - ENTRY DOOR/BOTTOM - BLACK
10	121894-31-01A	EA	FRAME - ENTRY DOOR - BRIGHT WHITE
10	121894-31-02A	EA	FRAME - ENTRY DOOR - BLACK
11	121898-21-01A	EA	JAMB - DOOR/ENTRANCE - BRIGHT WHITE
11	121898-21-02A	EA	JAMB - DOOR/ENTRANCE - BLACK
12	125724-01-000	EA	SHIM - DOOR, ENTRANCE
13	125724-02-000	EA	SHIM - DOOR, ENTRANCE
14	130096-05-000	EA	FOAM - SCREEN DOOR, RETAINER
15	P32208-06-S34	EA	DOOR - SCREEN - W/O STRIKE/SLIDER/HDW - BRIGHT WHITE
15	P32208-06-W37	EA	DOOR - SCREEN - W/O STRIKE/SLIDER/HDW - BLACK
16	137401-01-03B	EA	BRACKET - DOOR ANGLE - OFF WHITE
17	148364-01-12B	EA	STRIKE - SCREEN DOOR - BRIGHT WHITE
17	148364-01-04B	EA	STRIKE - SCREEN DOOR - BLACK
18	132915-01-01A	EA	LATCH - SCREEN DOOR - BLACK
19	139054-01-01A	EA	CAP - DRIP - JAMB MOUNTED - BRIGHT WHITE
19	139054-01-02A	EA	CAP - DRIP - JAMB MOUNTED - BLACK
20	038327-01-000	EA	TAPE - ANTI-SLIP - 2" X 60'
21	154585-01-01A	FT	SEAL - FOAM TAPE - ADHESIVE BACK - 3/8" X 3/8" - BLACK

COPYRIGHT © 2009 WINNEBAGO INDUSTRIES INC.

EXTERIOR DOORS & COMPARTMENTS GROUP (CONTINUED)

SCREEN

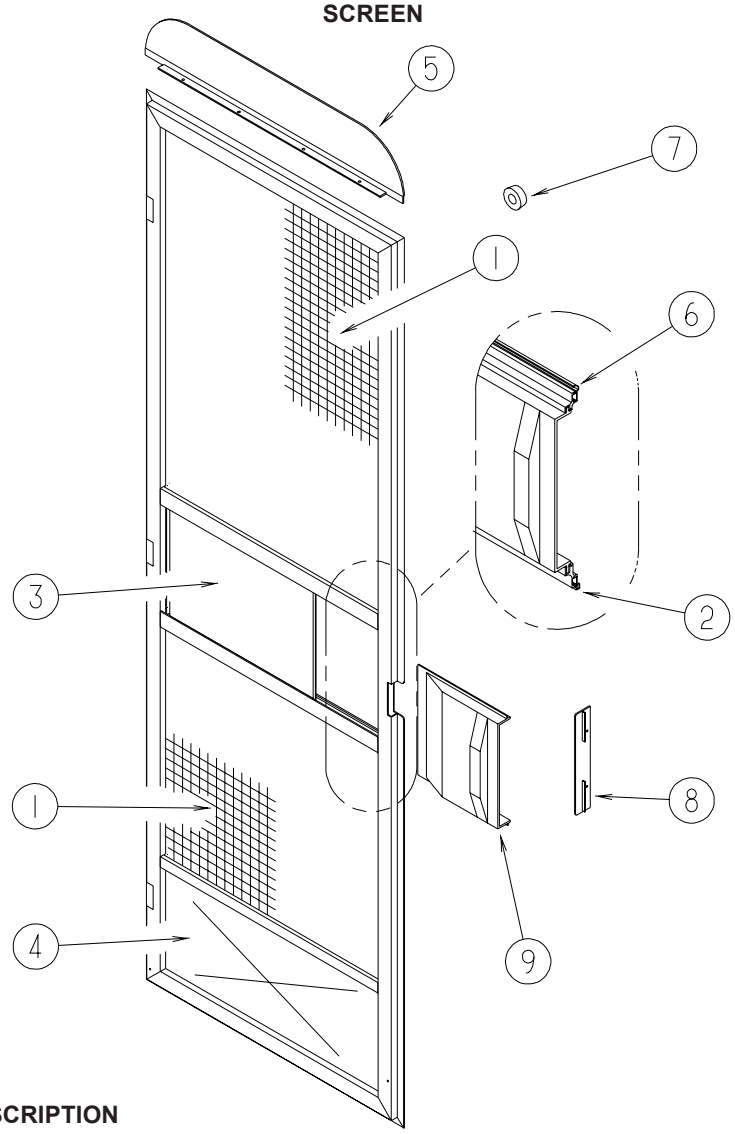

KEY	PART NUMBER	U/M	DESCRIPTION
1	002293-02-000	SF	SCREEN - 26" - CHARCOAL
2	002294-01-000	FT	SPLINE - SCREENING - .13" X .14"
3	016454-21-000	EA	INSERT/CENTER - SCREEN DOOR
4	078552-03-000	EA	KICK PANEL - SCREEN DOOR - LOWER INSERT - UNPAINTED
5	078595-01-000	EA	TOP PLATE - SCREEN DOOR - CURVED TOP - 4.7" X 25.35"
6	078777-08-000	FT	CHANNEL - SLIDER - 4 FOOT INCREMENTS
7	120863-09-000	EA	BUMPER - RUBBER/RADIUS TOP - 3/4" X 3/8" - LT GRAY
8	132081-01-01A	EA	STRIKE - SLIDER - SCREEN DOOR - BRIGHT WHITE
8	132081-01-03A	EA	STRIKE - SLIDER - SCREEN DOOR - BLACK
9	132082-01-01A	EA	SLIDER - SCREEN DOOR - BRIGHT WHITE
9	132082-01-03A	EA	SLIDER - SCREEN DOOR - BLACK

COPYRIGHT © 2009 WINNEBAGO INDUSTRIES INC.

EXTERIOR DOORS & COMPARTMENTS GROUP (CONTINUED)

LATCH

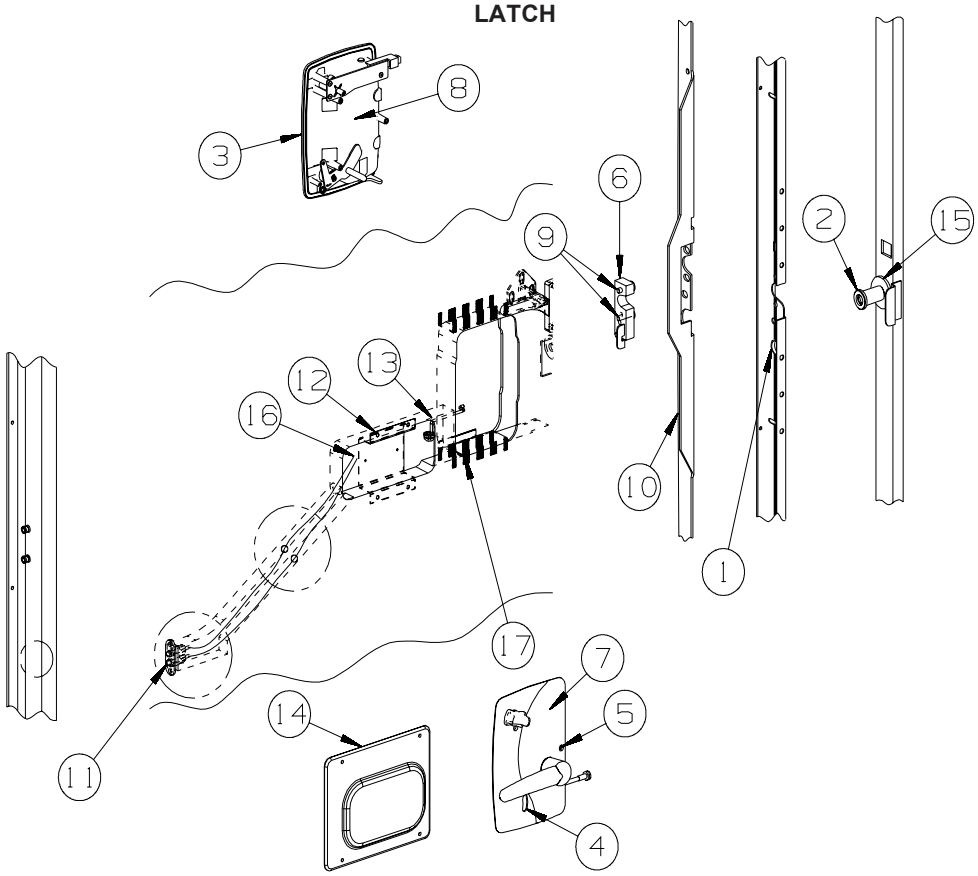

KEY	PART NUMBER	U/M	DESCRIPTION
1	061420-14-000	EA	PLUG/PLASTIC - 7/8" DIAMETER - BLACK
2	092927-20-000	EA	STRIKER - BOLT
3	112782-04-01A	EA	GASKET
4	112782-05-01A	EA	CAP - VINYL - RED
5	112782-08-01A	EA	SCREW - MOUNTING/PLATE - ZINC
6	112782-22-01A	EA	LATCH - SINGLE ROTOR
7	112782-27-01A	EA	LATCH - INTERIOR PLATE - WHITE
8	112782-20-01A	EA	LATCH - EXTERIOR - W/O LOCK CYLINDER W/ICON-REVERSIBLE KEY
9	072893-04-000	EA	NUTSERT - 10-32
10	132207-01-02B	EA	STIFFENER/DOOR - FORMED - E-COATED
10	132207-03-02B	EA	STIFFENER/DOOR - FORMED - E-COATED - VIEW, ASPECT, NAVION, CAMBRIA
11	138897-01-000	EA	SWITCH - 2 PIN/SPRING LOADED CONTACTS (EA=1 SWITCH)
12	113650-02-02B	EA	BRACKET - ACTUATOR - ELECTRIC - E-COATED
13	113651-01-01A	EA	ROD - CONTROL - MOTOR/LOCK
14	113960-01-01A	EA	COVER - ACTUATOR - POWER LOCK
15	147900-01-01A	EA	SPACER-STRIKE BOLT,MILL
16	138898-01-000	EA	ACTUATOR/LOCK - ELECTRIC
17	137230-01-01A	EA	SPACER- NOTCHED, MILL

COPYRIGHT © 2009 WINNEBAGO INDUSTRIES INC.

EXTERIOR SLIDEOUT GROUP

FRONT LEFT

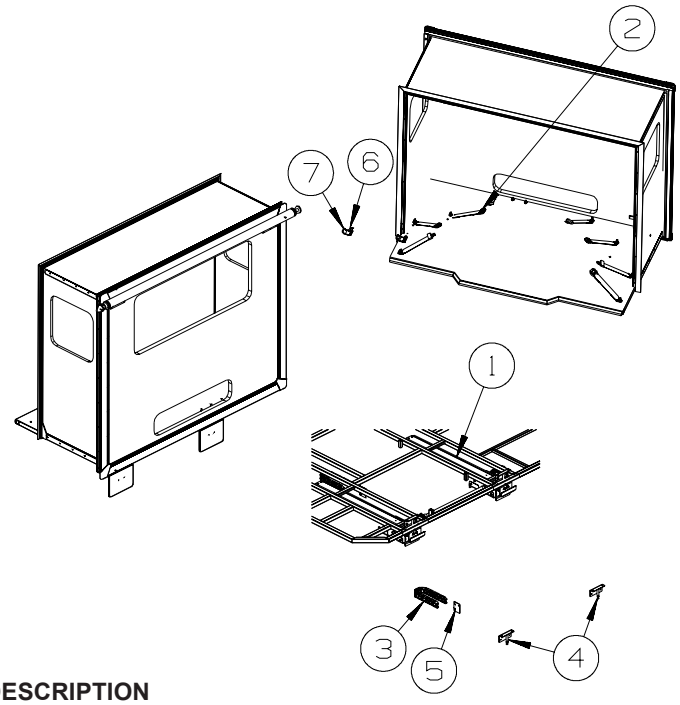

KEY	PART NUMBER	U/M	DESCRIPTION
1*	150661-01-000	EA	SLIDEOUT - ELECTRIC/SLIM
2	160167-02-01A	EA	SEAT BELT - 2” X 90” - BLACK
3	143541-03-01A	EA	CARRIER/WIRING - F/SLIDEOUT ROOM - 13 LINKS FROM: 00-00-00 THRU: 03-29-09
3	141019-13-02B	EA	SUPPORT - WIRE CARRIER - E-COATED FROM: 03-30-09 THRU: 99-99-99
4	150569-01-02B	EA	BRACKET - MOUNTING - SLIDEOUT - W/HEX NUT/TUBE - E-COATED
5	151124-01-02B	EA	COVER - SLIDEOUT WIRES - E-COATED FROM: 00-00-00 THRU: 04-15-09
6	150700-01-02B	EA	PLATE/MOUNTING - RESTRAINT/CHILD - 1" X 2.3" - E-COATED
7	150697-02-02B	EA	BRACKET - RESTRAINT/CHILD - E-COATED

***COMPONENT PARTS LISTED LATER IN THIS GROUP**

COPYRIGHT © 2009 WINNEBAGO INDUSTRIES INC.

EXTERIOR SLIDEOUT GROUP (CONTINUED)

FRONT LEFT (CONTINUED)

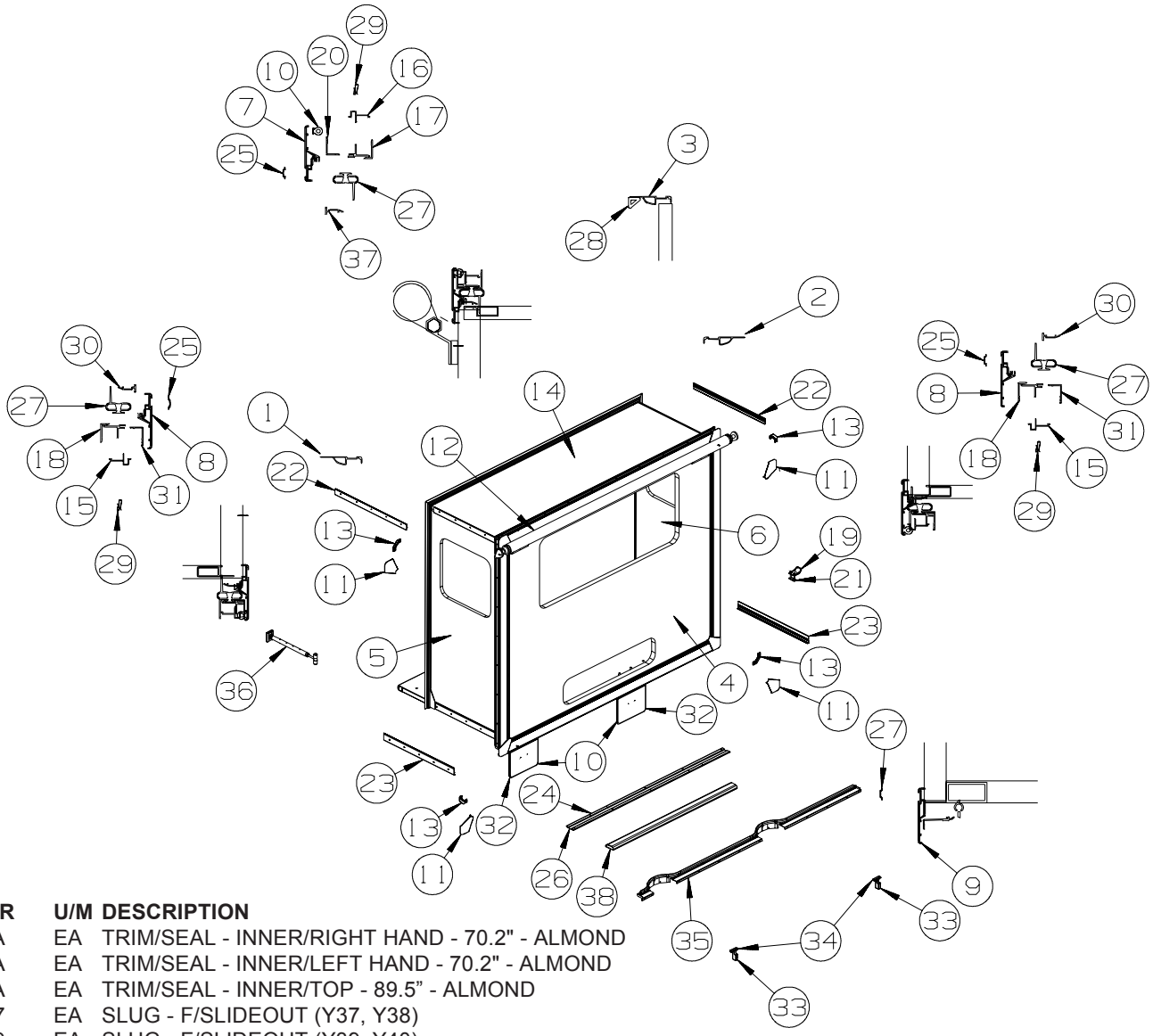

KEY	PART NUMBER	U/M	DESCRIPTION
1	139624-13-02A	EA	TRIM/SEAL - INNER/RIGHT HAND - 70.2" - ALMOND
2	139624-14-02A	EA	TRIM/SEAL - INNER/LEFT HAND - 70.2" - ALMOND
3	139624-32-02A	EA	TRIM/SEAL - INNER/TOP - 89.5” - ALMOND
4	165331-11-Y37	EA	SLUG - F/SLIDEOUT (Y37, Y38)
4	165331-11-Y39	EA	SLUG - F/SLIDEOUT (Y39, Y40)
4	165331-11-Y41	EA	SLUG - F/SLIDEOUT (Y41, Y42)
4	165331-14-Y37	EA	SLUG - F/SLIDEOUT (Y37, Y38) - 64V
4	165331-14-Y39	EA	SLUG - F/SLIDEOUT (Y39, Y40) - 64V
4	165331-14-Y41	EA	SLUG - F/SLIDEOUT (Y41, Y42) - 64V
4	165331-17-Y37	EA	SLUG - F/SLIDEOUT (Y37, Y38) - 094
4	165331-17-Y39	EA	SLUG - F/SLIDEOUT (Y39, Y40) - 094
4	165331-17-Y41	EA	SLUG - F/SLIDEOUT (Y41, Y42) - 094
4	165331-18-Y37	EA	SLUG - F/SLIDEOUT (Y37, Y38) - 64V/094
4	165331-18-Y39	EA	SLUG - F/SLIDEOUT (Y39, Y40) - 64V/094
4	165331-18-Y41	EA	SLUG - F/SLIDEOUT (Y41, Y42) - 64V/094
4	165331-19-Y37	EA	SLUG - F/SLIDEOUT (Y37, Y38) - 13Y/094
4	165331-19-Y39	EA	SLUG - F/SLIDEOUT (Y39, Y40) - 13Y/094
4	165331-19-Y41	EA	SLUG - F/SLIDEOUT (Y41, Y42) - 13Y/094
4	165331-20-Y37	EA	SLUG - F/SLIDEOUT (Y37, Y38) - 64V/13Y/094
4	165331-20-Y39	EA	SLUG - F/SLIDEOUT (Y39, Y40) - 64V/13Y/094
4	165331-20-Y41	EA	SLUG - F/SLIDEOUT (Y41, Y42) - 64V/13Y/094
5	164203-01-Y37	EA	PANEL END - F/SLIDEOUT (Y37, Y38)
5	164203-01-Y39	EA	PANEL END - F/SLIDEOUT (Y39, Y40)
5	164203-01-Y41	EA	PANEL END - F/SLIDEOUT (Y41, Y42)
5	164203-03-Y37	EA	PANEL END - F/SLIDEOUT (Y37, Y38) - 64V
5	164203-03-Y39	EA	PANEL END - F/SLIDEOUT (Y39, Y40) - 64V
5	164203-03-Y41	EA	PANEL END - F/SLIDEOUT (Y41, Y42) - 64V

COPYRIGHT © 2009 WINNEBAGO INDUSTRIES INC.

EXTERIOR SLIDEOUT GROUP (CONTINUED)

FRONT LEFT (CONTINUED)

KEY	PART NUMBER	U/M	DESCRIPTION
5	164203-05-Y37	EA	PANEL END - F/SLIDEOUT (Y37, Y38) - 094
5	164203-05-Y39	EA	PANEL END - F/SLIDEOUT (Y39, Y40) - 094
5	164203-05-Y41	EA	PANEL END - F/SLIDEOUT (Y41, Y42) - 094
5	164203-07-Y37	EA	PANEL END - F/SLIDEOUT (Y37, Y38) - 64V/094
5	164203-07-Y39	EA	PANEL END - F/SLIDEOUT (Y39, Y40) - 64V/094
5	164203-07-Y41	EA	PANEL END - F/SLIDEOUT (Y41, Y42) - 64V/094
5	164203-09-Y37	EA	PANEL END - F/SLIDEOUT (Y37, Y38) - 13Y/094
5	164203-09-Y39	EA	PANEL END - F/SLIDEOUT (Y39, Y40) - 13Y/094
5	164203-09-Y41	EA	PANEL END - F/SLIDEOUT (Y41, Y42) - 13Y/094
5	164203-11-Y37	EA	PANEL END - F/SLIDEOUT (Y37, Y38) - 64V/13Y/094
5	164203-11-Y39	EA	PANEL END - F/SLIDEOUT (Y39, Y40) - 64V/13Y/094
5	164203-11-Y41	EA	PANEL END - F/SLIDEOUT (Y41, Y42) - 64V/13Y/094
6	164203-02-Y37	EA	PANEL END - F/SLIDEOUT (Y37, Y38)
6	164203-02-Y39	EA	PANEL END - F/SLIDEOUT (Y39, Y40)
6	164203-02-Y41	EA	PANEL END - F/SLIDEOUT (Y41, Y42)
6	164203-04-Y37	EA	PANEL END - F/SLIDEOUT (Y37, Y38) - 64V
6	164203-04-Y39	EA	PANEL END - F/SLIDEOUT (Y39, Y40) - 64V
6	164203-04-Y41	EA	PANEL END - F/SLIDEOUT (Y41, Y42) - 64V
6	164203-06-Y37	EA	PANEL END - F/SLIDEOUT (Y37, Y38) - 094
6	164203-06-Y39	EA	PANEL END - F/SLIDEOUT (Y39, Y40) - 094
6	164203-06-Y41	EA	PANEL END - F/SLIDEOUT (Y41, Y42) - 094
6	164203-08-Y37	EA	PANEL END - F/SLIDEOUT (Y37, Y38) - 64V/094
6	164203-08-Y39	EA	PANEL END - F/SLIDEOUT (Y39, Y40) - 64V/094
6	164203-08-Y41	EA	PANEL END - F/SLIDEOUT (Y41, Y42) - 64V/094
6	164203-10-Y37	EA	PANEL END - F/SLIDEOUT (Y37, Y38) - 13Y/094
6	164203-10-Y39	EA	PANEL END - F/SLIDEOUT (Y39, Y40) - 13Y/094
6	164203-10-Y41	EA	PANEL END - F/SLIDEOUT (Y41, Y42) - 13Y/094
6	164203-12-Y37	EA	PANEL END - F/SLIDEOUT (Y37, Y38) - 64V/13Y/094
6	164203-12-Y39	EA	PANEL END - F/SLIDEOUT (Y39, Y40) - 64V/13Y/094
6	164203-12-Y41	EA	PANEL END - F/SLIDEOUT (Y41, Y42) - 64V/13Y/094
7	162052-40-01A	EA	TRIM/SEAL - W/MITERED ENDS - 87.8" - BRIGHT WHITE
7	162052-40-02A	EA	TRIM/SEAL - W/MITERED ENDS - 87.8" - BLACK
8	162052-11-01A	EA	TRIM/SEAL - W/MITERED ENDS - 70.2" - BRIGHT WHITE
8	162052-11-02A	EA	TRIM/SEAL - W/MITERED ENDS - 70.2" - BLACK
9	162054-09-01A	EA	TRIM/SEAL - W/MITERED ENDS - 87.8" - BRIGHT WHITE
9	162054-09-02A	EA	TRIM/SEAL - W/MITERED ENDS - 87.8" - BLACK
10	158297-01-000	FT	SEAL - D-SECTION/BULB/TEE - ADHESIVE BACK - BLACK
11	156151-01-02A	EA	PROTECTOR - CORNER - SLIDEOUT - BRIGHT WHITE
11	156151-01-01A	EA	PROTECTOR - CORNER - SLIDEOUT - BLACK
12			SLIDEOUT AWNING

ORDER AWNINGS & REPAIR PARTS FROM DOMETIC AT #800-366-3842 OR CAREFREE AT #800-621-2617 OR ONLINE AT WWW.E-CAREFREE.COM. THE AWNING INFORMATION YOU WILL NEED IS LOCATED ON THE MOTOR HOME NEAR THE TOP OF THE AWNING RAIL.

13	160421-01-01A	EA	CORNER TRIM/SLIDEOUT - 3.1" X 3.1" - BLACK
14	157283-01-U37	EA	ROOF - F/SLIDEOUT
15	142718-21-01A	EA	RETAINER - SIDEWALL/SLIDEOUT - 69.5"
16	142718-33-01A	EA	RETAINER - SIDEWALL/SLIDEOUT - 89.4"
17	151761-19-02A	EA	TRIM - SIDEWALL/SLIDEOUT/TOP - 90.7" - ALMOND
18	151760-28-02A	EA	TRIM - SIDEWALL/SLIDEOUT - 69.9" - ALMOND
19	150697-02-02B	EA	BRACKET - RESTRAINT/CHILD - E-COATED
20	136824-46-01A	EA	TRIM - SIDEWALL/SLIDEOUT - 90.7" - BRIGHT WHITE
20	136824-46-02A	EA	TRIM - SIDEWALL/SLIDEOUT - 90.7" - BLACK
21	150700-01-02B	EA	PLATE/MOUNTING - RESTRAINT/CHILD - 1" X 2.3" - E-COATED
22	158375-01-01A	EA	TRIM - FEATURE STRIP - 29.6" - BRIGHT WHITE
22	158375-01-02A	EA	TRIM - FEATURE STRIP - 29.6" - BLACK
23	163020-07-01A	EA	TRIM - FEATURE STRIP/LOWER - 2.3" X 28.9" - BRT WHT
23	163020-07-02A	EA	TRIM - FEATURE STRIP/LOWER - 2.3" X 28.9" - BLACK
24	115325-03-02A	EA	RAIL - FLOOR/SLIDEOUT ROOM - 64.5" LONG - BLACK
25	105312-01-07A	EA	INSERT - FEATURE STRIP - VINYL - BRIGHT WHITE
25	105312-01-13A	FT	INSERT - FEATURE STRIP - VINYL - BLACK
26	115661-01-000	FT	SHOE/GLIDE - SLIDEOUT ROOM - 1/16" X 3" - POLYETHYLENE

COPYRIGHT © 2009 WINNEBAGO INDUSTRIES INC.

EXTERIOR SLIDEOUT GROUP (CONTINUED)

FRONT LEFT (CONTINUED)

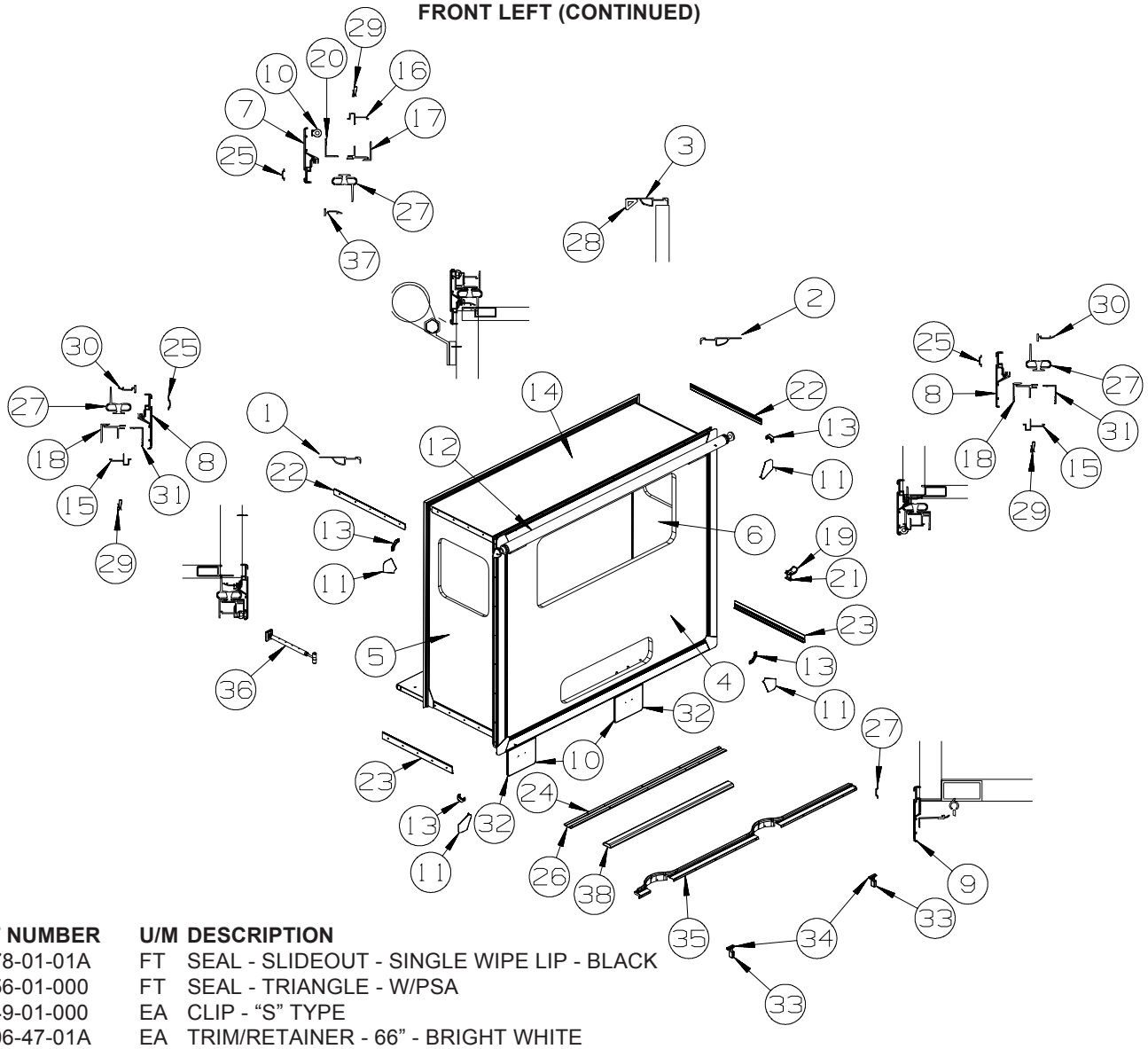

KEY	PART NUMBER	U/M	DESCRIPTION
27	136978-01-01A	FT	SEAL - SLIDEOUT - SINGLE WIPE LIP - BLACK
28	146056-01-000	FT	SEAL - TRIANGLE - W/PSA
29	142549-01-000	EA	CLIP - “S” TYPE
30	146606-47-01A	EA	TRIM/RETAINER - 66” - BRIGHT WHITE
30	146606-47-02A	EA	TRIM/RETAINER - 66" - BLACK
31	136824-43-01A	EA	TRIM - SIDEWALL/SLIDEOUT - 70" - BRIGHT WHITE
31	136824-43-02A	EA	TRIM - SIDEWALL/SLIDEOUT - 70" - BLACK
32	138077-07-01A	EA	COVER/RAM - 11.8" X 9.2" - W/O TUBE - BRIGHT WHITE
32	138077-07-10A	EA	COVER/RAM - 11.8" X 9.2" - W/O TUBE - BLACK
33	126313-09-02B	EA	SUPPORT - ROLLER - SLIDE-OUT ROOM - E-COATED
34	134855-01-000	EA	BEARING PAD - NARROW
35	159111-06-U21	EA	TRIM/ZEE - W/SEAL/END CAPS - SIDEWALL/LOWER-90.5"-BRT WHT
35	159111-06-AA1	EA	TRIM/ZEE - W/SEAL/END CAPS - SIDEWALL/LOWER-90.5" - BLACK
36*	162495-01-01A	EA	ROD - LOCK/SLIDEOUT - ADJUSTABLE 17"/34" - W/STRAP/RING
37	146606-51-01A	EA	TRIM/RETAINER - 86" - BRIGHT WHITE
37	146606-51-02A	EA	TRIM/RETAINER - 86" - BLACK
38	134756-02-Y37	EA	RAMP - FABRIC COVERED - SLIDEOUT - 51.2” - 513

***COMPONENT PARTS LISTED LATER IN THIS GROUP**

COPYRIGHT © 2009 WINNEBAGO INDUSTRIES INC.

EXTERIOR SLIDEOUT GROUP (CONTINUED)

COMPONENT PARTS FOR FRONT LEFT

150661-01-000

KEY	PART NUMBER	U/M	DESCRIPTION	VENDOR NO.
	150661-01-700	EA	SHAFT - SLAVE	29042
	150661-01-701	EA	SHAFT - ROUND DRIVE - 30"	29038
	150661-01-702	EA	POWER HEAD W/WORM DRIVE	29020
	150661-01-703	EA	CRANK TUBE	29022
	150661-01-704	EA	CAM FOLLOWER & NUT	28701
	150661-01-705	EA	FLANGE BEARING - .63" X .5"L	645-0028
	150661-01-706	EA	SPROCKET	28706
	150661-01-707	EA	SET SCREW - 1/4"-20	608-6005
	150661-01-708	EA	CLEVIS PIN	643-0030
	150661-01-709	EA	COTTOR PIN	625-0017
	150661-01-710	EA	CLEVIS PIN	643-0003
	150661-01-711	EA	COTTER PIN	625-0016
	150661-01-712	EA	SHAFT - ROUND DRIVE - 7.4"	29040
	150661-01-713	EA	ADAPTER - ADJUSTABLE SHAFT	28395
	150661-01-714	EA	RETAINING RING	634-0007
	150661-01-715	EA	DRIVE ASM. (MOTOR W/GEAR BOX)	29449
	150661-01-716	EA	MOTOR ONLY	16263
	150661-01-717	EA	PIN/SPRING - 5/16" X 1 1/4"	624-0014

162495-01-01A, 162495-02-01A

KEY	PART NUMBER	U/M	DESCRIPTION	VENDOR NO.
	162495-01-700	EA	BUTTON-DBL. PLAS. SNAP	DP130

COPYRIGHT © 2009 WINNEBAGO INDUSTRIES INC.

EXTERIOR SLIDEOUT GROUP (CONTINUED)

LEFT REAR

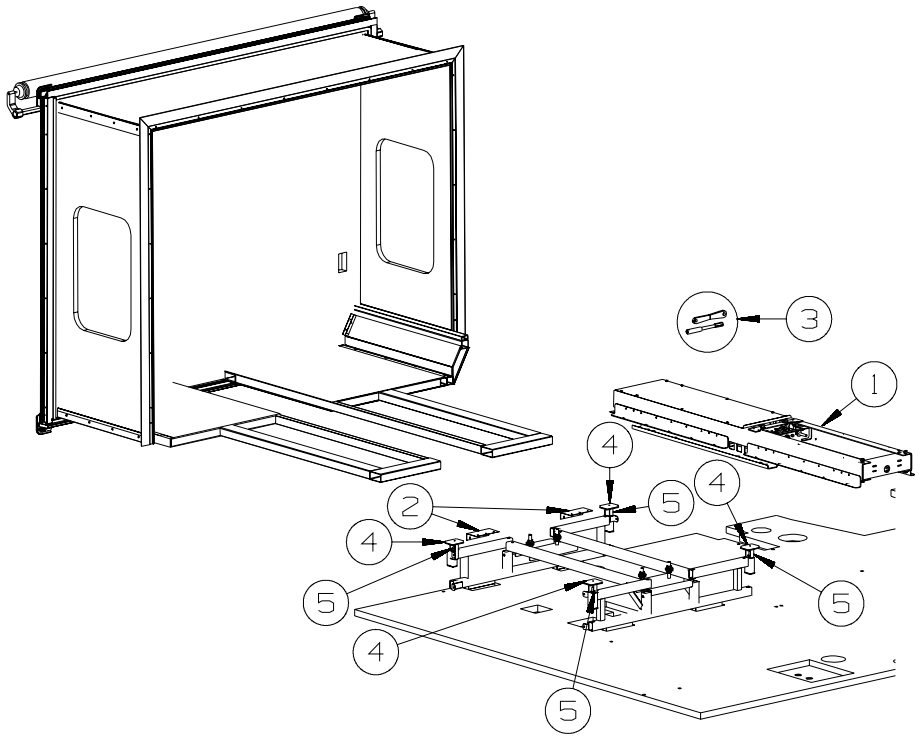

KEY	PART NUMBER	U/M	DESCRIPTION
1*	162834-01-000	EA	SLIDE ARM ASSEMBLY - 24"/REAR - ELECTRIC
2	113904-23-02B	EA	ANGLE - ATTACHMENT/WHEEL LIP - E-COATED
3	140464-03-000	EA	WRENCH - SLIDE ROOM RETRACT - RATCHET W/2 EXTENSIONS
4	128599-03-000	EA	PAD - F/SLIDEOUT - 2" X 2.6"
5	126313-02-02B	EA	SUPPORT - SLIDE - F/SLIDE-OUT ROOM - E-COATED FROM: 00-00-00 THRU: 09-14-08
5	126313-10-02B	EA	SUPPORT - SLIDE - F/SLIDE-OUT ROOM - E-COATED FROM: 09-15-08 THRU: 99-99-99

***COMPONENT PARTS LISTED LATER IN THIS GROUP**

COPYRIGHT © 2009 WINNEBAGO INDUSTRIES INC.

EXTERIOR SLIDEOUT GROUP (CONTINUED)

LEFT REAR (CONTINUED)

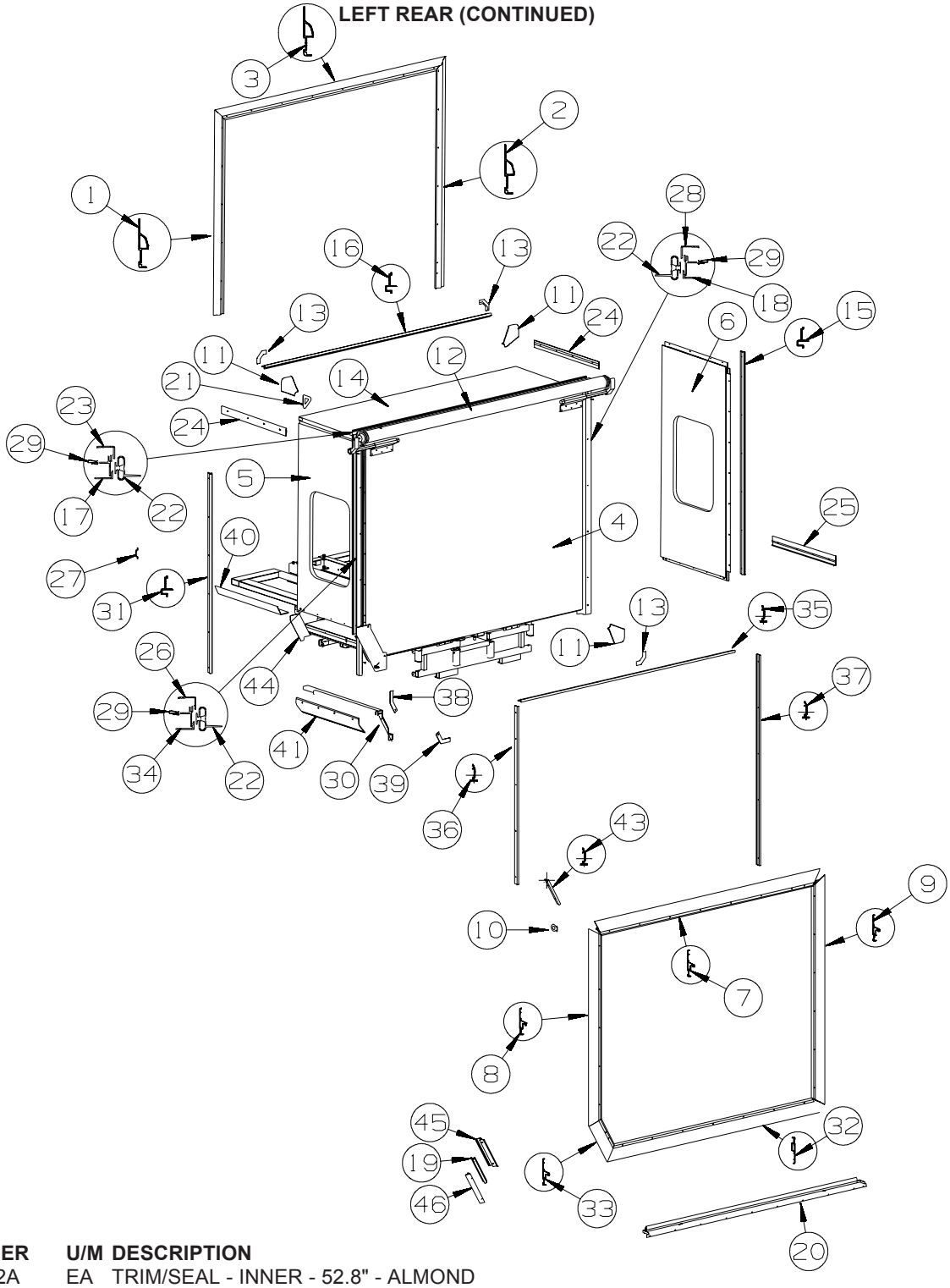

KEY	PART NUMBER	U/M	DESCRIPTION
1	139624-83-02A	EA	TRIM/SEAL - INNER - 52.8" - ALMOND
2	139624-78-02A	EA	TRIM/SEAL - INNER - 59" - ALMOND
3	139624-76-02A	EA	TRIM/SEAL - INNER - 74.6" - ALMOND
4	165331-13-Y37	EA	SLUG - F/SLIDEOUT (Y37, Y38)
4	165331-13-Y39	EA	SLUG - F/SLIDEOUT (Y39, Y40)
4	165331-13-Y41	EA	SLUG - F/SLIDEOUT (Y41, Y42)
4	165331-16-Y37	EA	SLUG - F/SLIDEOUT (Y37, Y38) - 64V
4	165331-16-Y39	EA	SLUG - F/SLIDEOUT (Y39, Y40) - 64V
4	165331-16-Y41	EA	SLUG - F/SLIDEOUT (Y41, Y42) - 64V

COPYRIGHT © 2009 WINNEBAGO INDUSTRIES INC.

EXTERIOR SLIDEOUT GROUP (CONTINUED)

LEFT REAR (CONTINUED)

KEY	PART NUMBER	U/M	DESCRIPTION
5	167680-01-Y37	EA	PANEL END - F/SLIDEOUT (Y37, Y38)
5	167680-01-Y39	EA	PANEL END - F/SLIDEOUT (Y39, Y40)
5	167680-01-Y41	EA	PANEL END - F/SLIDEOUT (Y41, Y42)
5	167680-02-Y37	EA	PANEL END - F/SLIDEOUT (Y37, Y38) - 64V
5	167680-02-Y39	EA	PANEL END - F/SLIDEOUT (Y39, Y40) - 64V
5	167680-02-Y41	EA	PANEL END - F/SLIDEOUT (Y41, Y42) - 64V
5	167680-03-Y37	EA	PANEL END - F/SLIDEOUT (Y37, Y38) - 094
5	167680-03-Y39	EA	PANEL END - F/SLIDEOUT (Y39, Y40) - 094
5	167680-03-Y41	EA	PANEL END - F/SLIDEOUT (Y41, Y42) - 094
5	167680-04-Y37	EA	PANEL END - F/SLIDEOUT (Y37, Y38) - 64V/094
5	167680-04-Y39	EA	PANEL END - F/SLIDEOUT (Y39, Y40) - 64V/094
5	167680-04-Y41	EA	PANEL END - F/SLIDEOUT (Y41, Y42) - 64V/094
5	167680-05-Y37	EA	PANEL END - F/SLIDEOUT (Y37, Y38) - 13Y/094
5	167680-05-Y39	EA	PANEL END - F/SLIDEOUT (Y39, Y40) - 13Y/094
5	167680-05-Y41	EA	PANEL END - F/SLIDEOUT (Y41, Y42) - 13Y/094
5	167680-06-Y37	EA	PANEL END - F/SLIDEOUT (Y37, Y38) - 64V/13Y/094
5	167680-06-Y39	EA	PANEL END - F/SLIDEOUT (Y39, Y40) - 64V/13Y/094
5	167680-06-Y41	EA	PANEL END - F/SLIDEOUT (Y41, Y42) - 64V/13Y/094
6	166468-03-Y37	EA	PANEL END - F/SLIDEOUT (Y37, Y38)
6	166468-03-Y39	EA	PANEL END - F/SLIDEOUT (Y39, Y40)
6	166468-03-Y41	EA	PANEL END - F/SLIDEOUT (Y41, Y42)
6	166468-04-Y37	EA	PANEL END - F/SLIDEOUT (Y37, Y38) - 64V
6	166468-04-Y39	EA	PANEL END - F/SLIDEOUT (Y39, Y40) - 64V
6	166468-04-Y41	EA	PANEL END - F/SLIDEOUT (Y41, Y42) - 64V
6	166468-05-Y37	EA	PANEL END - F/SLIDEOUT (Y37, Y38) - 094
6	166468-05-Y39	EA	PANEL END - F/SLIDEOUT (Y39, Y40) - 094
6	166468-05-Y41	EA	PANEL END - F/SLIDEOUT (Y41, Y42) - 094
6	166468-06-Y37	EA	PANEL END - F/SLIDEOUT (Y37, Y38) - 64V/094
6	166468-06-Y39	EA	PANEL END - F/SLIDEOUT (Y39, Y40) - 64V/094
6	166468-06-Y41	EA	PANEL END - F/SLIDEOUT (Y41, Y42) - 64V/094
6	166468-07-Y37	EA	PANEL END - F/SLIDEOUT (Y37, Y38) - 13Y/094
6	166468-07-Y39	EA	PANEL END - F/SLIDEOUT (Y39, Y40) - 13Y/094
6	166468-07-Y41	EA	PANEL END - F/SLIDEOUT (Y41, Y42) - 13Y/094
6	166468-08-Y37	EA	PANEL END - F/SLIDEOUT (Y37, Y38) - 64V/13Y/094
6	166468-08-Y39	EA	PANEL END - F/SLIDEOUT (Y39, Y40) - 64V/13Y/094
6	166468-08-Y41	EA	PANEL END - F/SLIDEOUT (Y41, Y42) - 64V/13Y/094
7	162052-53-01A	EA	TRIM/SEAL - W/MITERED ENDS - 72.9" - BRIGHT WHITE
7	162052-53-02A	EA	TRIM/SEAL - W/MITERED ENDS - 72.9" - BLACK
8	162052-64-01A	EA	TRIM/SEAL - W/MITERED ENDS - 50.5" - BRIGHT WHITE
8	162052-64-02A	EA	TRIM/SEAL - W/MITERED ENDS - 50.5" - BLACK
9	162052-55-01A	EA	TRIM/SEAL - W/MITERED ENDS - 58.9" - BRIGHT WHITE
9	162052-55-02A	EA	TRIM/SEAL - W/MITERED ENDS - 58.9" - BLACK
10	158297-01-000	FT	SEAL - D-SECTION/BULB/TEE - ADHESIVE BACK - BLACK
11	156151-01-02A	EA	PROTECTOR - CORNER - SLIDEOUT - BRIGHT WHITE
11	156151-01-01A	EA	PROTECTOR - CORNER - SLIDEOUT - BLACK
12			SLIDEOUT AWNING

ORDER AWNINGS & REPAIR PARTS FROM DOMETIC AT #800-366-3842 OR CAREFREE AT #800-621-2617 OR ONLINE AT WWW.E-CAREFREE.COM.
THE AWNING INFORMATION YOU WILL NEED IS LOCATED ON THE MOTOR HOME NEAR THE TOP OF THE AWNING RAIL.

13	160421-01-01A	EA	CORNER TRIM/SLIDEOUT - 3.1" X 3.1" - BLACK
14	165636-01-Y37	EA	ROOF - F/SLIDEOUT
15	142718-52-01A	EA	RETAINER - SIDEWALL/SLIDEOUT - 57"
16	142718-51-01A	EA	RETAINER - SIDEWALL/SLIDEOUT - 73.1"
17	151761-26-02A	EA	TRIM - SIDEWALL/SLIDEOUT/TOP - 75.3" - BRIGHT WHITE
18	151760-29-02A	EA	TRIM - SIDEWALL/SLIDEOUT - 58.2" - ALMOND
19	142718-64-01A	EA	RETAINER - SIDEWALL/SLIDEOUT - 7.9"
20	157584-21-AA2	EA	TRIM/ZEE - W/SEAL/END CAPS - SLIDEOUT/LOWER-75.3"- BRT WHT
20	157584-21-AA1	EA	TRIM/ZEE - W/SEAL/END CAPS - SLIDEOUT/LOWER-75.3" - BLACK
21	146056-01-000	FT	SEAL - TRIANGLE - W/PSA
22	136978-01-01A	FT	SEAL - SLIDEOUT - SINGLE WIPE LIP - BLACK

COPYRIGHT © 2009 WINNEBAGO INDUSTRIES INC.

EXTERIOR SLIDEOUT GROUP (CONTINUED)

LEFT REAR (CONTINUED)

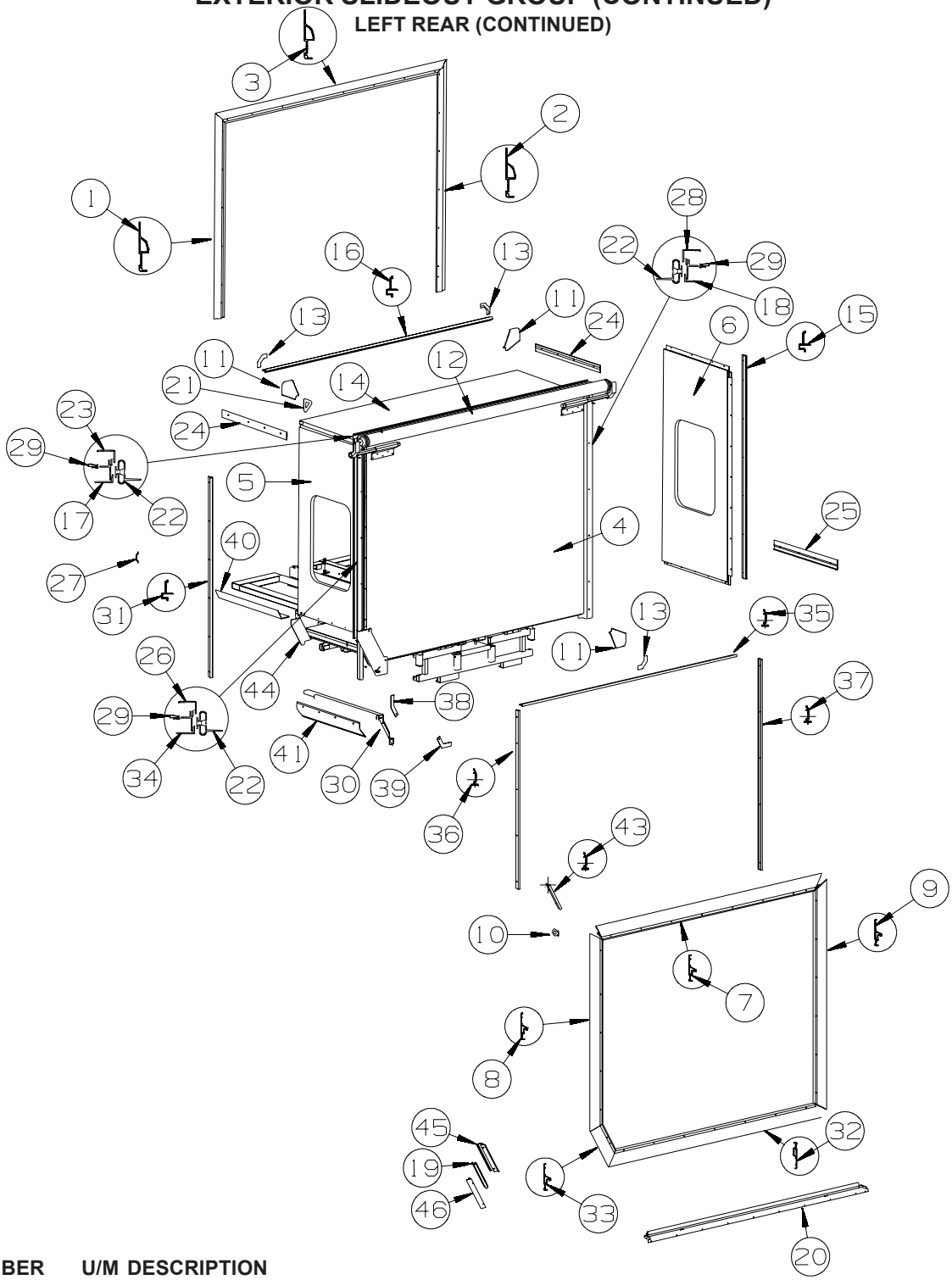

KEY	PART NUMBER	U/M	DESCRIPTION
23	136824-65-01A	EA	TRIM - SIDEWALL/SLIDEOUT - 75.7" - BRIGHT WHITE
23	136824-65-02A	EA	TRIM - SIDEWALL/SLIDEOUT - 75.7" - BLACK
24	158375-04-01A	EA	TRIM - FEATURE STRIP - 24.6" - BRIGHT WHITE
24	158375-04-02A	EA	TRIM - FEATURE STRIP - 24.6" - BLACK
25	163020-08-01A	EA	TRIM - FEATURE STRIP/LOWER - 2.3" X 23.8" - BRT WHT
25	163020-08-02A	EA	TRIM - FEATURE STRIP/LOWER - 2.3" X 23.8" - BLACK
26	136824-76-01A	EA	TRIM - SIDEWALL/SLIDEOUT - 50.9" - BRIGHT WHITE
26	136824-76-02A	EA	TRIM - SIDEWALL/SLIDEOUT - 50.9" - BLACK
27	105312-01-07A	FT	INSERT - FEATURE STRIP - VINYL - BRIGHT WHITE
27	105312-01-13A	FT	INSERT - FEATURE STRIP - VINYL - BLACK
28	136824-66-01A	EA	TRIM - SIDEWALL/SLIDEOUT - 58.8" - BRIGHT WHITE
28	136824-66-02A	EA	TRIM - SIDEWALL/SLIDEOUT - 58.8" - BLACK
29	142549-01-000	EA	CLIP - “S” TYPE
30	167573-01-Y37	EA	PANEL - CORNER F/SLIDEOUT
30	167573-02-Y37	EA	PANEL - CORNER F/SLIDEOUT - 64V

COPYRIGHT © 2009 WINNEBAGO INDUSTRIES INC.

EXTERIOR SLIDEOUT GROUP (CONTINUED)

LEFT REAR (CONTINUED)

KEY	PART NUMBER	U/M	DESCRIPTION
31	142718-57-01A	EA	RETAINER - SIDEWALL/SLIDEOUT - 51.1"
32	162054-21-01A	EA	TRIM/SEAL - W/MITERED ENDS - 68.7" - BRIGHT WHITE
32	162054-21-02A	EA	TRIM/SEAL - W/MITERED ENDS - 68.7" - BLACK
33	162052-74-01A	EA	TRIM/SEAL - W/MITERED ENDS - 11.8" - BRIGHT WHITE
33	162052-74-02A	EA	TRIM/SEAL - W/MITERED ENDS - 11.8" - BLACK
34	151760-34-02A	EA	TRIM - SIDEWALL/SLIDEOUT - 51.1" - ALMOND
35	146606-48-01A	EA	TRIM/RETAINER - 69.3" - BRIGHT WHITE
35	146606-48-02A	EA	TRIM/RETAINER - 69.3" - BLACK
36	146606-63-01A	EA	TRIM/RETAINER - 47.4" - BRIGHT WHITE
36	146606-63-02A	EA	TRIM/RETAINER - 47.4" - BLACK
37	146606-76-01A	EA	TRIM/RETAINER - 54.6" - BRIGHT WHITE
37	146606-76-02A	EA	TRIM/RETAINER - 54.6" - BLACK
38	149691-03-12B	EA	TRIM/KEY CORNER - SLIDEOUT - BRT WHT
39	149691-02-12B	EA	TRIM/KEY CORNER - SLIDEOUT - BRT WHT
40	167908-01-01A	EA	TRIM - FEATURE STRIP/SLIDEOUT - 23.8" - BRIGHT WHITE
40	167908-01-02A	EA	TRIM - FEATURE STRIP/SLIDEOUT - 23.8" - BLACK
41	168938-01-01A	EA	TRIM - FEATURE/LOWER - 4.2" X 23.8" - BRIGHT WHITE
41	168938-01-02A	EA	TRIM - FEATURE/LOWER - 4.2" X 23.8" - BLACK
42	169585-01-02A	EA	COVER/CORNER - SLIDEOUT - BRIGHT WHITE
42	169585-01-01A	EA	COVER/CORNER - SLIDEOUT - BLACK
43	146606-87-01A	EA	TRIM/RETAINER - 7.9" - BRIGHT WHITE
43	146606-87-02A	EA	TRIM/RETAINER - 7.9" - BLACK
44	168903-01-02B	EA	BRACKET - SEAL/SLIDEOUT - E-COATED
45	168916-01-02A	EA	TRIM - SIDEWALL/SLIDEOUT/INNER - 9.6" - ALMOND
46	168917-01-01A	EA	TRIM - SIDEWALL/SLIDEOUT/OUTER - 10.3" - BRT WHT
46	168917-01-02A	EA	TRIM - SIDEWALL/SLIDEOUT/OUTER - 10.3" - BLACK

COMPONENT PARTS FOR LEFT REAR

162834-01-000

KEY	PART NUMBER	U/M	DESCRIPTION	VENDOR NO.
	131281-01-702	EA	PIN/CLEVIS-1/4" PLATED	1213190
	131281-01-704	EA	HAIRPIN/COTTER - 3/8" SPRING	1213460
	138173-01-701	EA	POP RIVET - SS 3/16"X1/4"	1214630
	138173-01-707	EA	WEAR PUCK - PLASTIC F/DRIVE	1612523
	148875-01-700	EA	PIN/COTTER - 3/32" X 1/2"	1213520
	148875-01-703	EA	NUT/PLASTIC - 1" F/1/4" PIN	1612548
	148875-01-705	EA	MOTOR/LINEAR - SLIDE ROOM	1820111
	149165-01-700	EA	BEARING - 5/8" ID	1102015
	149165-01-701	EA	PIN/CLEVIS - 1/4" X 2 7/8"	1213204
	149165-01-703	EA	SEAL/RUBBER - INNER FRAME	1612007
	149165-01-704	EA	SEAL/LOWER ROOM - “Z”	1612009
	149165-01-705	EA	DRIVE/WORM SCREW - 30"	1820400

COPYRIGHT © 2009 WINNEBAGO INDUSTRIES INC.

GENERATOR GROUP

GAS

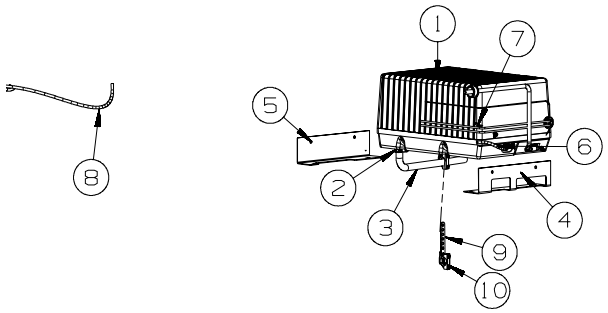

KEY	PART NUMBER	U/M	DESCRIPTION
1	109982-03-000	EA	GENERATOR - 4.0 MICROLITE - ONAN
2	007125-04-000	EA	CLAMP - MUFFLER - 1.12"DIAMETER
3	105958-37-000	EA	PIPE - EXHAUST/GENERATOR
			FROM: 00-00-00 THRU: 04-05-09
3	105958-26-000	EA	PIPE - EXHAUST/GENERATOR
			FROM: 04-06-99 THRU: 99-99-99
4	114070-02-02B	EA	SUPPORT - GENERATOR - LEFT
5	114071-02-02B	EA	SUPPORT - GENERATOR - RIGHT
6	128139-03-000	EA	HOSE - FUEL - LOW PERMEABILITY - 1/4" DIAMETER - 40N
7	084884-01-000	EA	PLUG - BRASS - 3/8"
8	128139-03-000	EA	HOSE - FUEL - LOW PERMEABILITY - 1/4" DIAMETER
9	007131-01-000	EA	HANGER - TAILPIPE - 6 SLOTS
			FROM: 08-08-08 THRU: 99-99-99
10	007125-03-000	EA	CLAMP - MUFFLER - 1.5"DIAMETER
			FROM: 08-08-08 THRU: 99-99-99

COPYRIGHT © 2009 WINNEBAGO INDUSTRIES INC.

HEATING & A/C GROUP

FURNACE

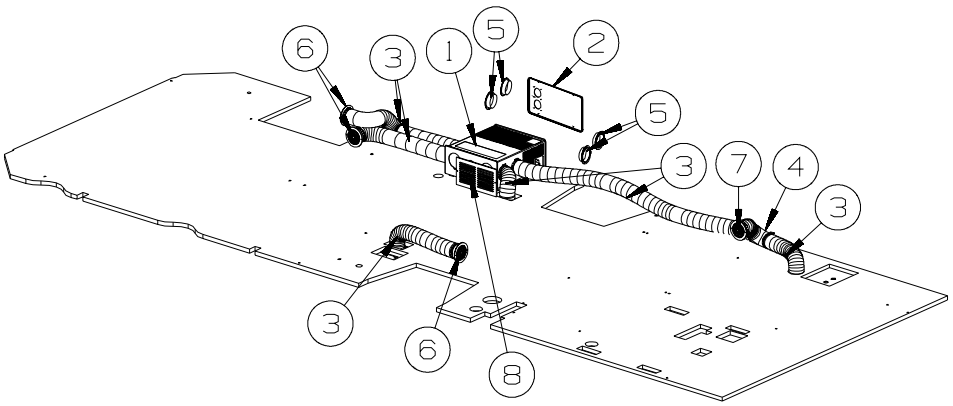

KEY	PART NUMBER	U/M	DESCRIPTION
1*	139980-02-000	EA	FURNACE - 30000 BTU - SF QUIET - SUBURBAN SF-30 2321J
2	139980-10-02A	EA	DOOR - ACCESS/FURNACE - BRIGHT WHITE
2	139980-10-03A	EA	DOOR - ACCESS/FURNACE - BLACK
3	009198-01-000	FT	DUCT - HEAT - FLEXIBLE - 4" ID X 25'
4	089367-01-000	EA	TEE - 4" OD - 7" LONG - METAL
5	069636-02-000	EA	CONNECTOR - DUCT - 4" ID
	009200-01-000	EA	TAPE - FURNACE - 1 1/2"
6	173191-02-02A	EA	REGISTER W/O DAMPER - 4" DIAMETER - PLASTIC - BEIGE
7	173191-01-02A	EA	REGISTER W/DAMPER - 4" DIAMETER - PLASTIC - BEIGE
8	093614-11-01A	EA	GRILLE - AIR RETURN - 13.9" X 7.9" - BEIGE

***COMPONENT PARTS LISTED LATER IN THIS GROUP**

COPYRIGHT © 2009 WINNEBAGO INDUSTRIES INC.

HEATING & A/C GROUP (CONTINUED)

COMPONENT PARTS FOR FURNACE

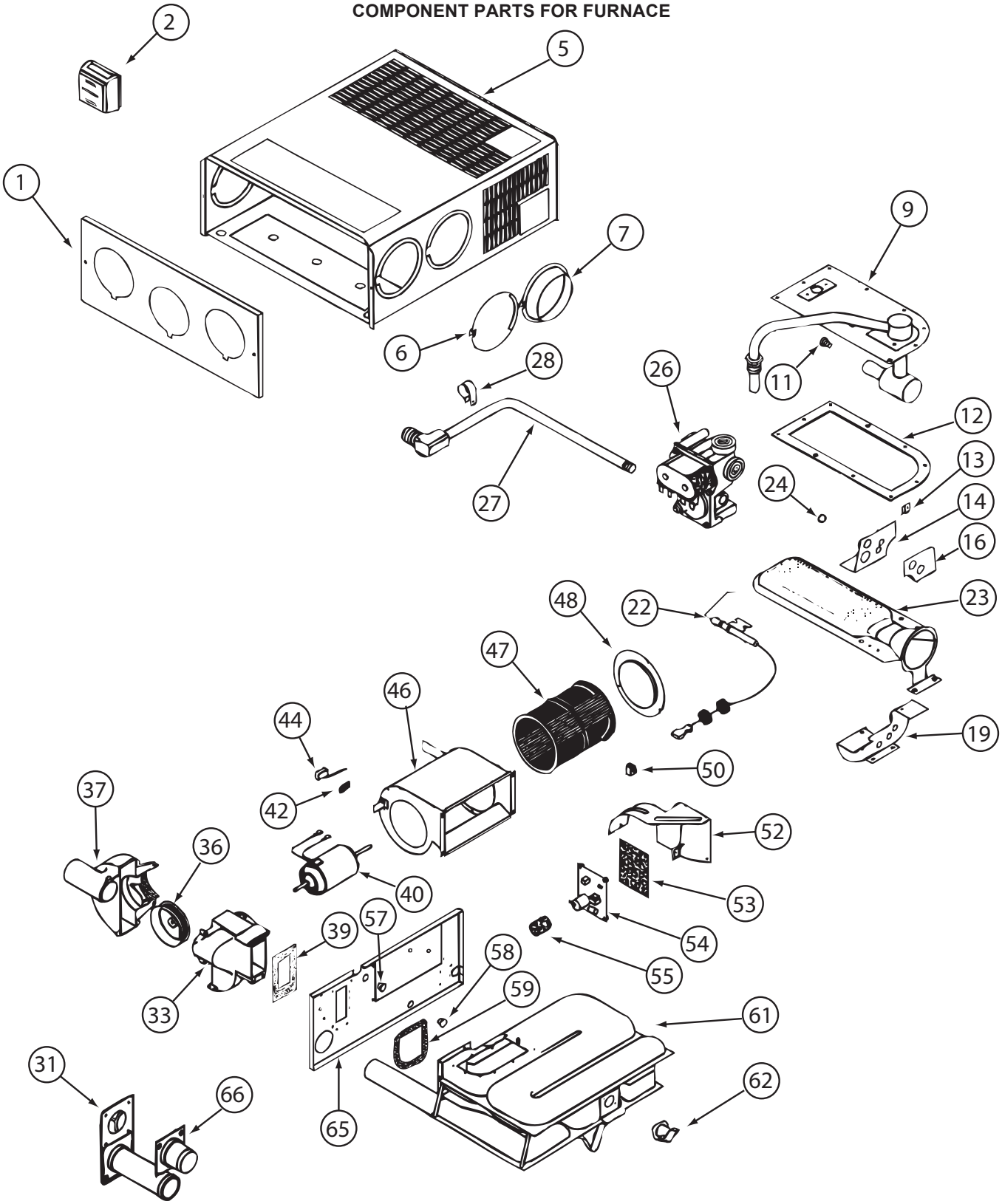

139980-02-000

COPYRIGHT © 2009 WINNEBAGO INDUSTRIES INC.

HEATING & A/C GROUP (CONTINUED)

COMPONENT PARTS FOR FURNACE (CONTINUED)

139980-02-000 (CONTINUED)

KEY	PART NUMBER	U/M	DESCRIPTION	VENDOR NO.
9	139980-01-700	EA	MANIFOLD ASSEMBLY	171571
11	092300-02-701	EA	ORIFICE-MAIN BURNER (NT-30BW	180214
12	098668-22-703	EA	GASKET - BURNER ACCESS COVER	070811
22	139980-01-701	EA	ELECTRODE	232286
23	098668-02-700	EA	BURNER ASSEMBLY,SF-30 & SF35	010745
26	098668-01-718	EA	VALVE-GAS SF S.N.974903079	161122
27	139980-01-702	EA	PIPE ASSEMBLY/GAS INLET	171574
31	098668-01-707	EA	TUBE ASSEMBLY, EXHAUST W/CAP	260231
33	139980-01-703	EA	HOUSING/COMB. - FRONT/HALF	390852
36	098668-01-706	EA	WHEEL-COMBUSTION AIR	350184
37	139980-01-704	EA	HOUSING/COMB. - REAR/HALF	390848
39	139980-01-705	EA	GASKET/FIREWALL-COMB AIR	071084
40	139980-01-706	EA	MOTOR ASSEMBLY W/GASKET	232682
42	101990-01-714	EA	GASKET-MICROSWITCH	230877
44	098668-21-700	EA	SWITCH-MICRO-W/O FLAG 3 1/4"	232261
46	139980-01-708	EA	BLOWER ASSEMBLY - ROOM AIR	390739BK
47	098668-01-711	EA	WHEEL-BLOWER, ROOM AIR	350129
48	139980-01-709	EA	ORFICE RING	390696
50	139980-01-710	EA	SWITCH - ON/OFF	232351
52	139980-01-711	EA	PANEL ASSEMBLY-MODULE BD	101663
53	139980-01-712	EA	INSULATOR - MODULE BD	070807
54	098668-22-705	EA	MODULE BD W/RELAY TIME DELAY	520820
55	139980-01-713	EA	CAP/INSULATOR-MODULE BD	070973
57	139980-01-714	EA	BUSHING - UNIVERSAL	070362
58	139980-01-715	EA	BUSHING - STRAIN RELIEF	231809
59	098668-01-716	EA	GASKET-FIREWALL,CHAMBER SIDE	070808
61	139980-01-716	EA	CHAMBER ASSEMBLY - FINAL	021149BK
62	098668-21-701	EA	SWITCH - LIMIT	232504
66	098668-01-713	EA	TUBE ASSEMBLY, INTAKE	051248
	139980-02-700	EA	BLOWER ASM-1/2 HOUSING/OUTER	390851
	139980-02-701	EA	BLOWER ASM-1/2 HOUSING/INNER	390872

CONTACT WINNEBAGO PART SALES FOR UNLISTED COMPONENT(S)

COPYRIGHT © 2009 WINNEBAGO INDUSTRIES INC.

HEATING & A/C GROUP (CONTINUED)

ROOF

KEY	PART NUMBER	U/M	DESCRIPTION
*	148644-01-01A	EA	A/C-ROOF - LOW PROFILE - ART WHITE - RVP 9203C876
*	148644-01-02A	EA	A/C-ROOF - LOW PROFILE - BLACK - RVP 9203C879
*	131184-06-01A	EA	CEILING ASSEMBLY - A/C DUCTED - WHITE
*	148644-02-01A	EA	A/C-ROOF-LOW PROFILE/HEAT PMP-ART WHT-RVP9003C876 - 29P
*	148644-02-02A	EA	A/C-ROOF - LOW PRFL/HT PUMP - BLK-RVP 9003C879 - 29P
*	131184-07-01A	EA	CEILING ASSEMBLY - HEAT PUMP - DUCTED - WHITE- 29P
	131184-02-01A	EA	BOARD - DIVIDER - SILVER

***COMPONENT PARTS LISTED LATER IN THIS GROUP**

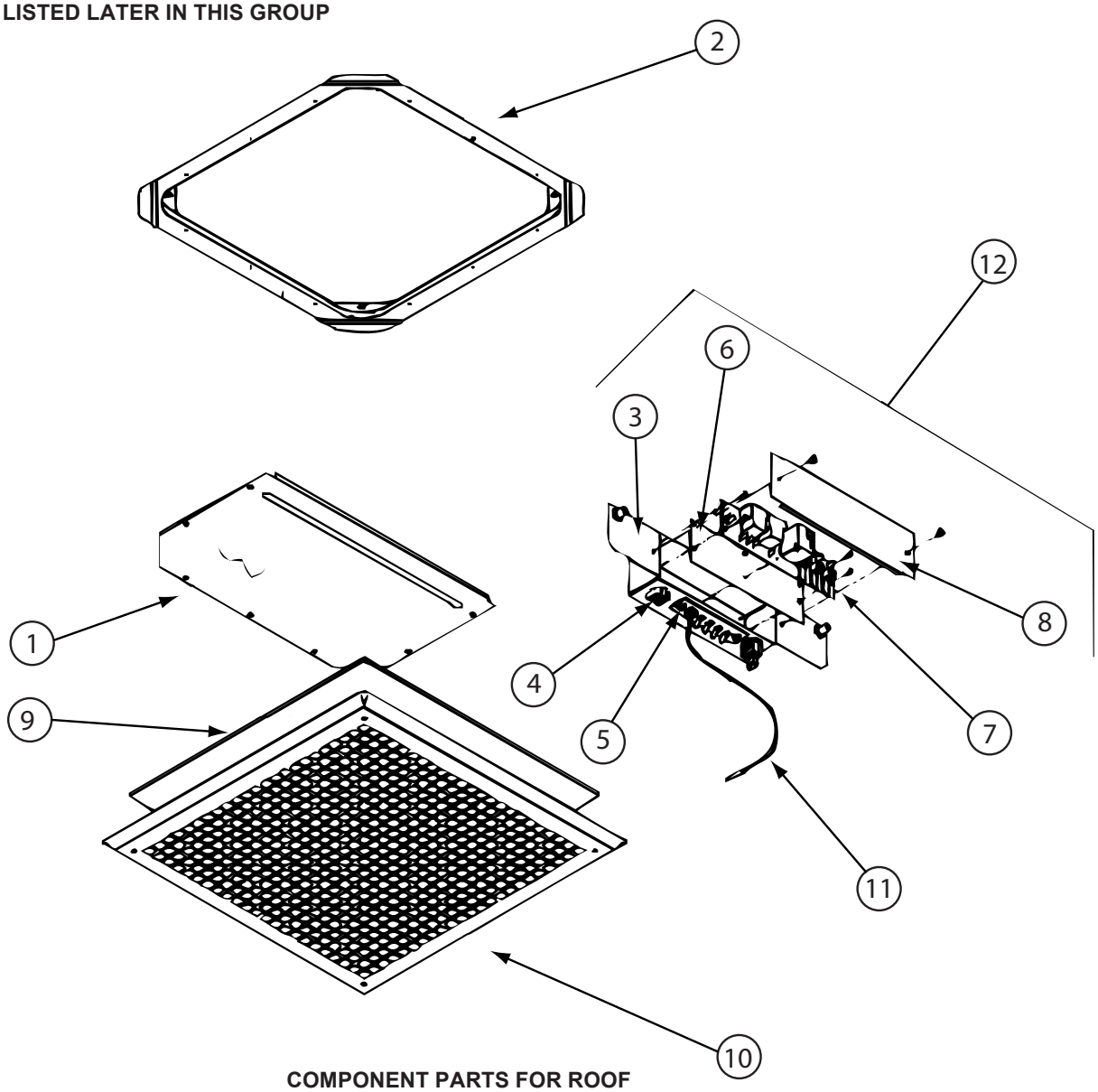

COMPONENT PARTS FOR ROOF

131184-06-01A

KEY	PART NUMBER	U/M	DESCRIPTION	VENDOR NO.
4	131184-01-700	EA	PLUG ASSEMBLY	7330A389
5	131184-01-701	EA	TERMINAL BOARD	7330B3201
6	131184-01-702	EA	ISOLATOR - BLANK	7330C365
7	131184-03-700	EA	BOARD - P.C.	7330D3211
9	108892-01-703	EA	FILTER	6798A3761
10	108892-01-704	EA	GRILLE 16 3/8X16 3/8 RETURN	6798-3041
11	105620-12-719	EA	COIL SENSOR	7330A3231
12	131184-01-705	EA	JUNCTION BOX ASSEMBLY	7330B5551
	131184-01-703	EA	SMALL PARTS PKG	8330-5961
	131184-01-706	EA	NUT/WING	1200-550

CONTACT WINNEBAGO PART SALES FOR UNLISTED COMPONENT(S)

COPYRIGHT © 2009 WINNEBAGO INDUSTRIES INC.

HEATING & A/C GROUP (CONTINUED)

COMPONENT PARTS FOR ROOF (CONTINUED)

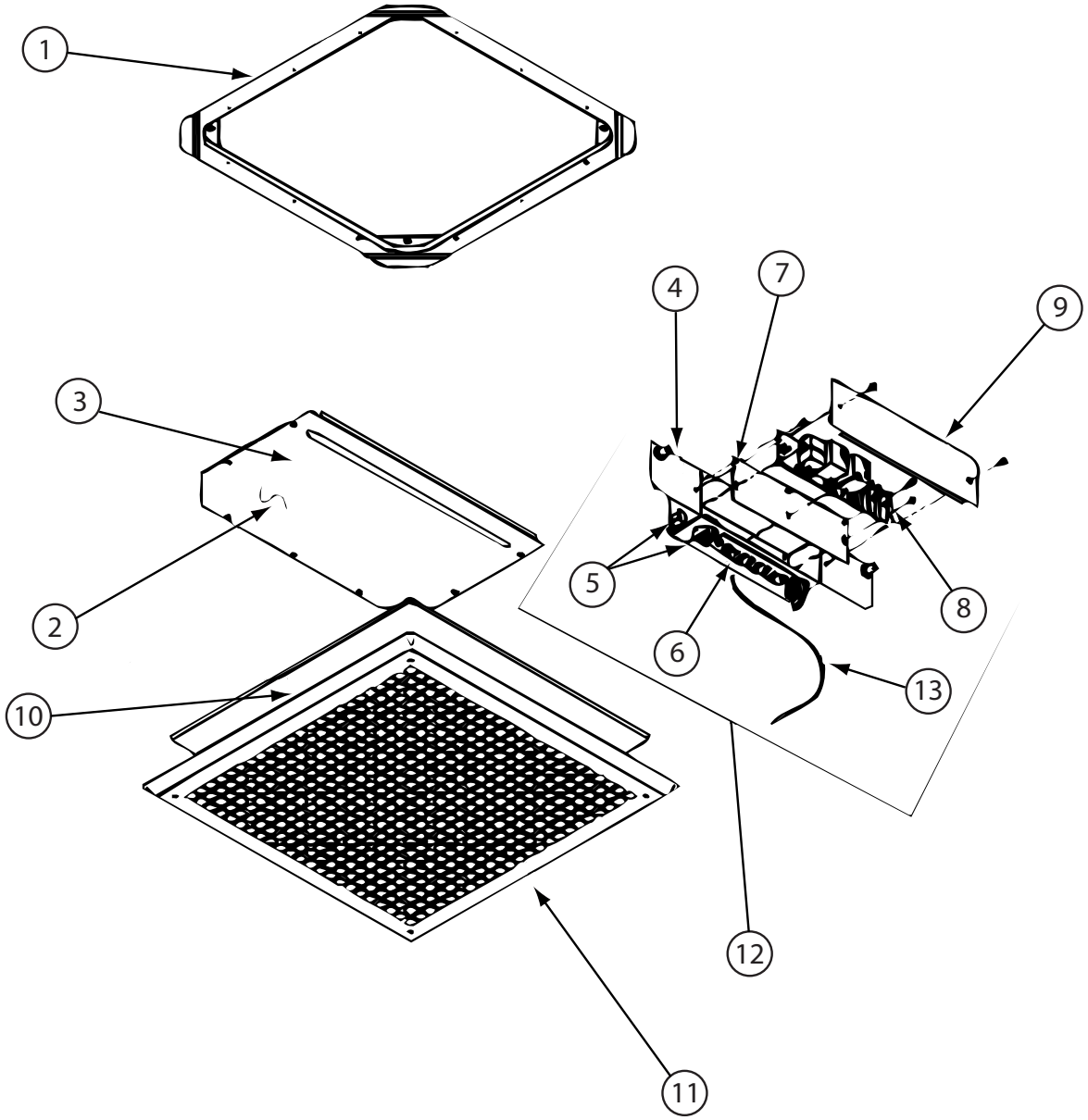

131184-07-01A

KEY	PART NUMBER	U/M	DESCRIPTION	VENDOR NO.
4	131184-04-703	EA	BOX - JUNCTION	7330-113
5	131184-04-700	EA	PLUG ASSEMBLY	7530A340
6	131184-04-702	EA	BOARD - TERMINAL	7530B3201
7	131184-01-702	EA	ISOLATOR - BLANK	7330C365
8	131184-04-705	EA	BOARD - P.C.	7330B3311
10	108892-01-703	EA	FILTER	6798A3761
11	108892-01-704	EA	GRILLE 16 3/8X16 3/8 RETURN	6798-3041
12	131184-04-706	EA	JUNCTION BOX ASM.(HEAT PUMP)	7530-508
13	105620-12-719	EA	COIL SENSOR	7330A3231
	131184-01-706	EA	NUT/WING	1200-550
	131184-07-700	EA	SMALL PARTS PKG	8330-5951
			CONTACT WINNEBAGO PART SALES FOR UNLISTED COMPONENT(S)	

COPYRIGHT © 2009 WINNEBAGO INDUSTRIES INC.

HEATING & A/C GROUP (CONTINUED)

COMPONENT PARTS FOR ROOF (CONTINUED)

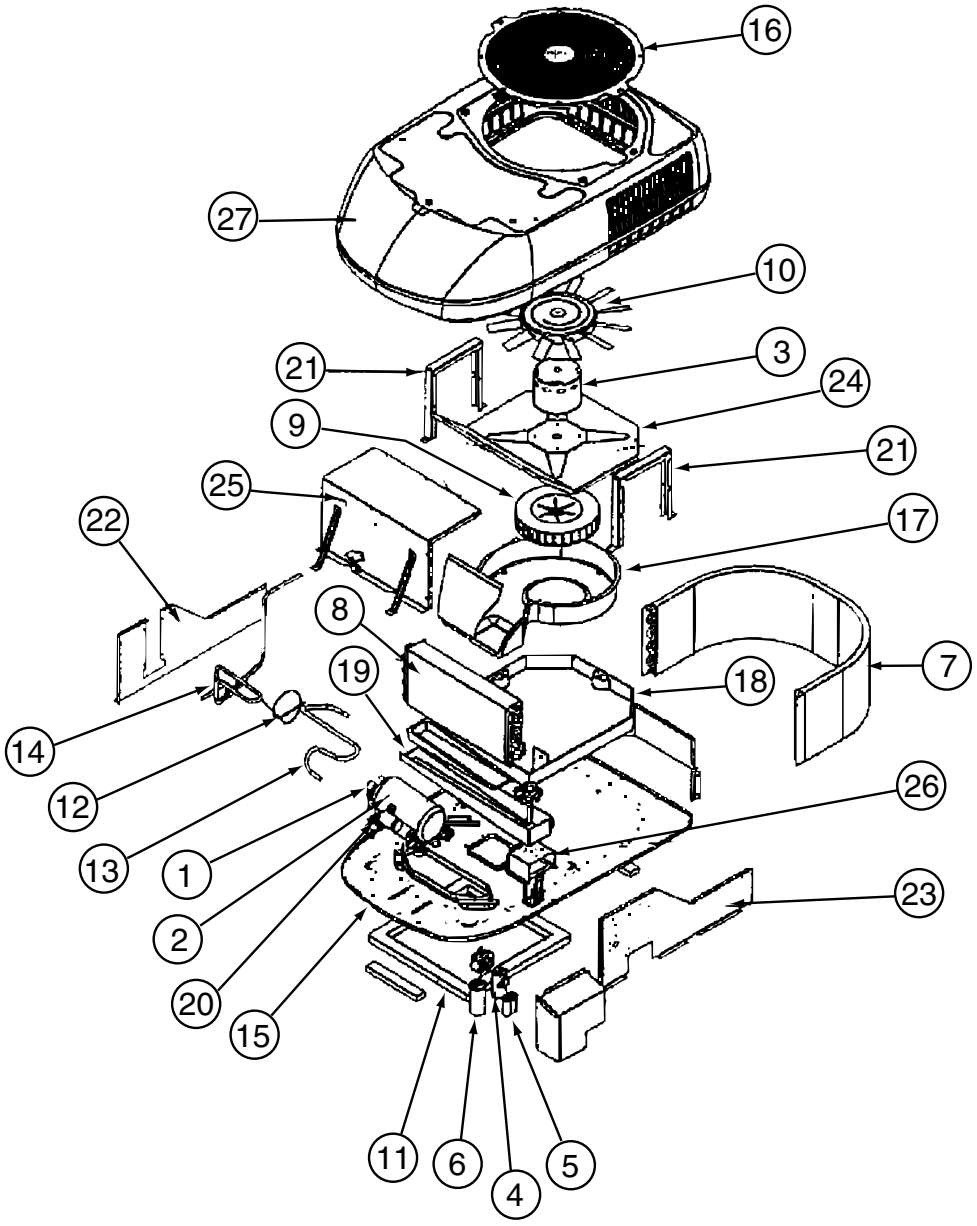

148644-01-01A

KEY	PART NUMBER	U/M	DESCRIPTION	VENDOR NO.
1	148644-01-701	EA	OVERLOAD	1450-0131
2	148644-01-702	EA	COMPRESSOR	1450A2189
3	148644-01-703	EA	MOTOR - BLOWER	1468A3239
4	105620-10-705	EA	PTCR (START DEVICE) - W/CAP.	8333A9021
5	093763-01-704	EA	CAPACITOR-FAN (INDOOR MOTOR)	1499-5461
6	131188-01-701	EA	RUN CAP. (COMP-40MFD/370V)	1499-5721
7	148644-01-704	EA	COIL-CONDENSER	1452-1201
8	148644-01-705	EA	COIL - EVAPORATOR	1452-1211
9	147102-01-705	EA	BLOWER WHEEL	1472-1111
10	147102-01-706	EA	FAN BLADE	1472-5021
11	037648-01-714	EA	GASKET PACKAGE	8332-3301
27	148644-01-700	EA	SHROUD - (ARCTIC WHITE)	9233A5461
	148644-02-702	EA	GRILLE - F/FAN	9233A3151
			CONTACT WINNEBAGO PART SALES FOR UNLISTED COMPONENT(S)	

COPYRIGHT © 2009 WINNEBAGO INDUSTRIES INC.

HEATING & A/C GROUP (CONTINUED)

COMPONENT PARTS FOR ROOF (CONTINUED)

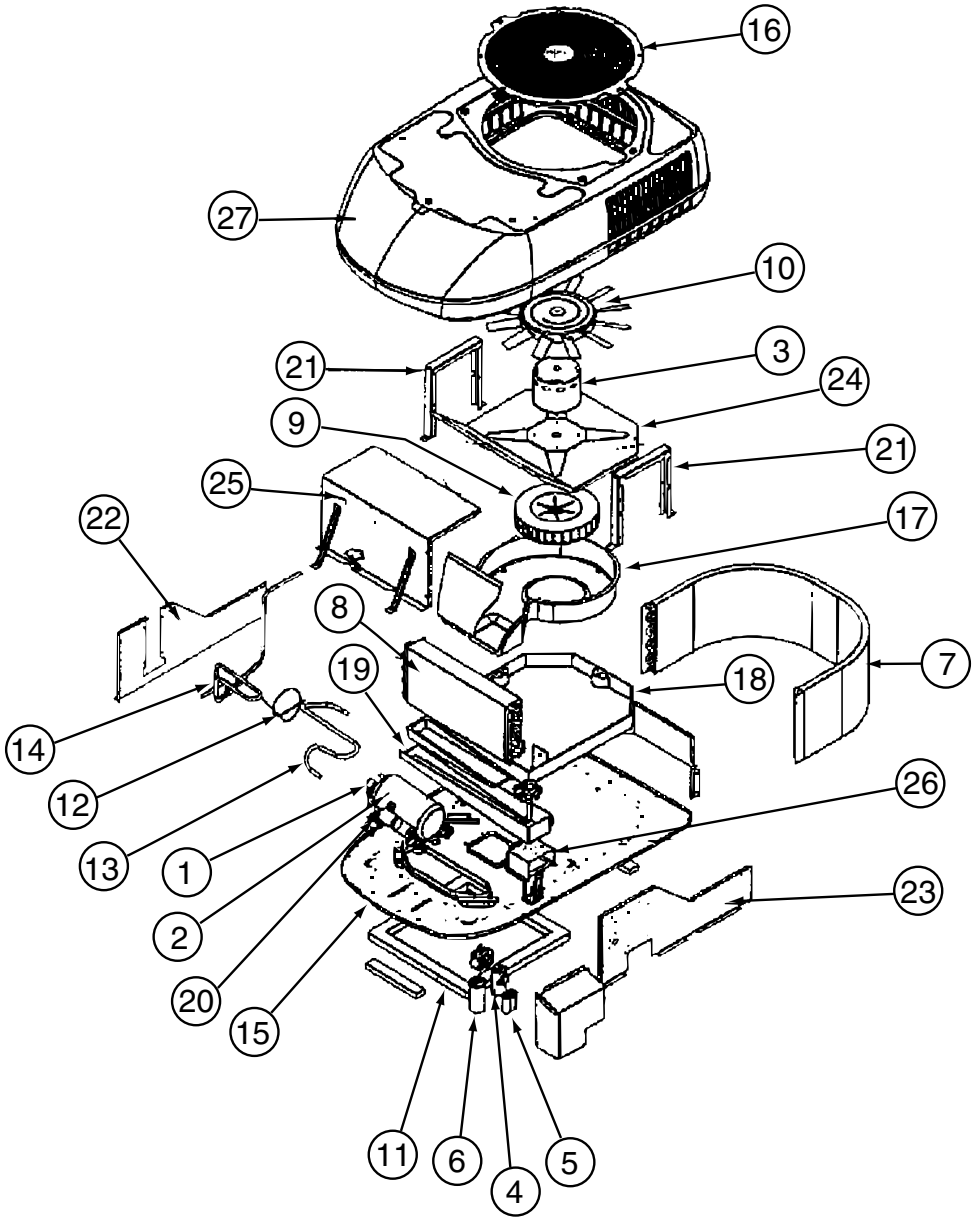

148644-01-02A

KEY	PART NUMBER	U/M	DESCRIPTION	VENDOR NO.
1	148644-01-701	EA	OVERLOAD	1450-013
2	148644-01-702	EA	COMPRESSOR	1450A2189
3	148644-01-703	EA	MOTOR - BLOWER	1468A3239
4	105620-01-705	EA	PTCR (START DEVICE) - W/CAP.	8333A9021
5	093763-01-704	EA	CAPACITOR-FAN (INDOOR MOTOR)	1499-5461
6	131188-01-701	EA	RUN CAP. (COMP-40MFD/370V)	1499-5721
7	148644-01-704	EA	COIL-CONDENSER	1452-1201
8	148644-01-705	EA	COIL - EVAPORATOR	1452-1211
9	147102-01-705	EA	BLOWER WHEEL	1472-1111
10	147102-01-706	EA	FAN BLADE	1472-5021
11	037648-01-714	EA	GASKET PACKAGE	8332-3301
27	148644-01-706	EA	SHROUD - (BLACK)	9233A5491
	148644-02-702	EA	GRILLE - F/FAN	9233A3151
			CONTACT WINNEBAGO PART SALES FOR UNLISTED COMPONENT(S)	

COPYRIGHT © 2009 WINNEBAGO INDUSTRIES INC.

HEATING & A/C GROUP (CONTINUED)

COMPONENT PARTS FOR ROOF (CONTINUED)

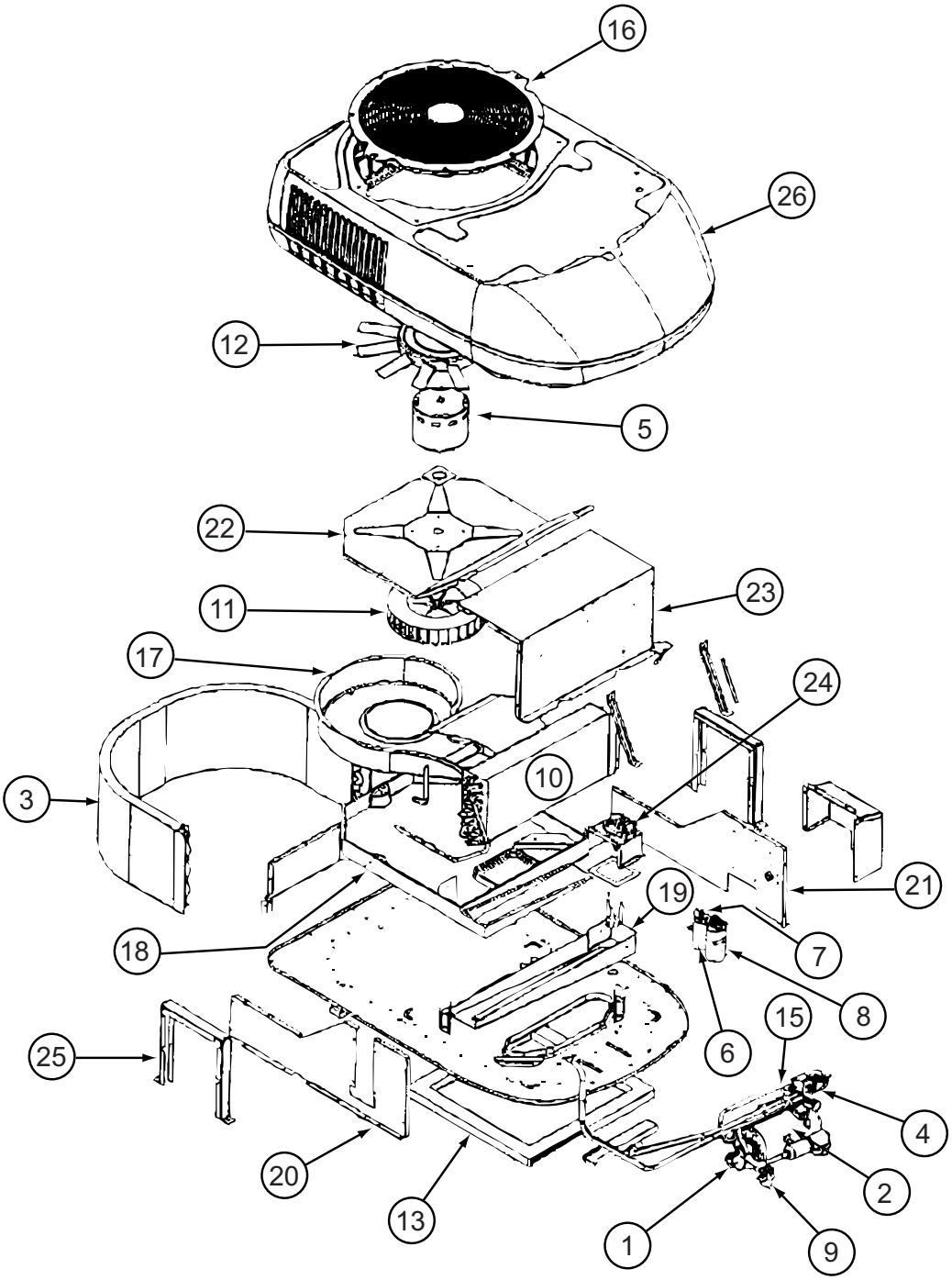

148644-02-01A

KEY	PART NUMBER	U/M	DESCRIPTION	VENDOR NO.
1	148644-01-701	EA	OVERLOAD	1450-0131
2	148644-01-702	EA	COMPRESSOR	1450A2189
3	148644-02-700	EA	COIL - CONDENSER	1452-1241
4	105620-12-708	EA	COIL - SOLENOID	1460-1081
5	148644-01-703	EA	MOTOR - BLOWER	1468A3239
6	105620-10-705	EA	PTCR (START DEVICE) - W/CAP.	8333A9021
7	093763-01-704	EA	CAPACITOR-FAN (INDOOR MOTOR)	1499-5461
8	131188-01-701	EA	RUN CAP. (COMP-40MFD/370V)	1499-5721
10	148644-02-701	EA	COIL - EVAPORATOR	1452-1261
11	147102-01-705	EA	BLOWER WHEEL	1472-1111
12	147102-01-706	EA	FAN BLADE	1472-5021
13	037648-01-714	EA	GASKET PACKAGE	8332-3301
16	148644-02-702	EA	GRILLE - F/FAN	9233A3151
26	148644-01-700	EA	SHROUD - (ARCTIC WHITE)	9233A5461
			CONTACT WINNEBAGO PART SALES FOR UNLISTED COMPONENT(S)	

COPYRIGHT © 2009 WINNEBAGO INDUSTRIES INC.

HEATING & A/C GROUP (CONTINUED)

COMPONENT PARTS FOR ROOF (CONTINUED)

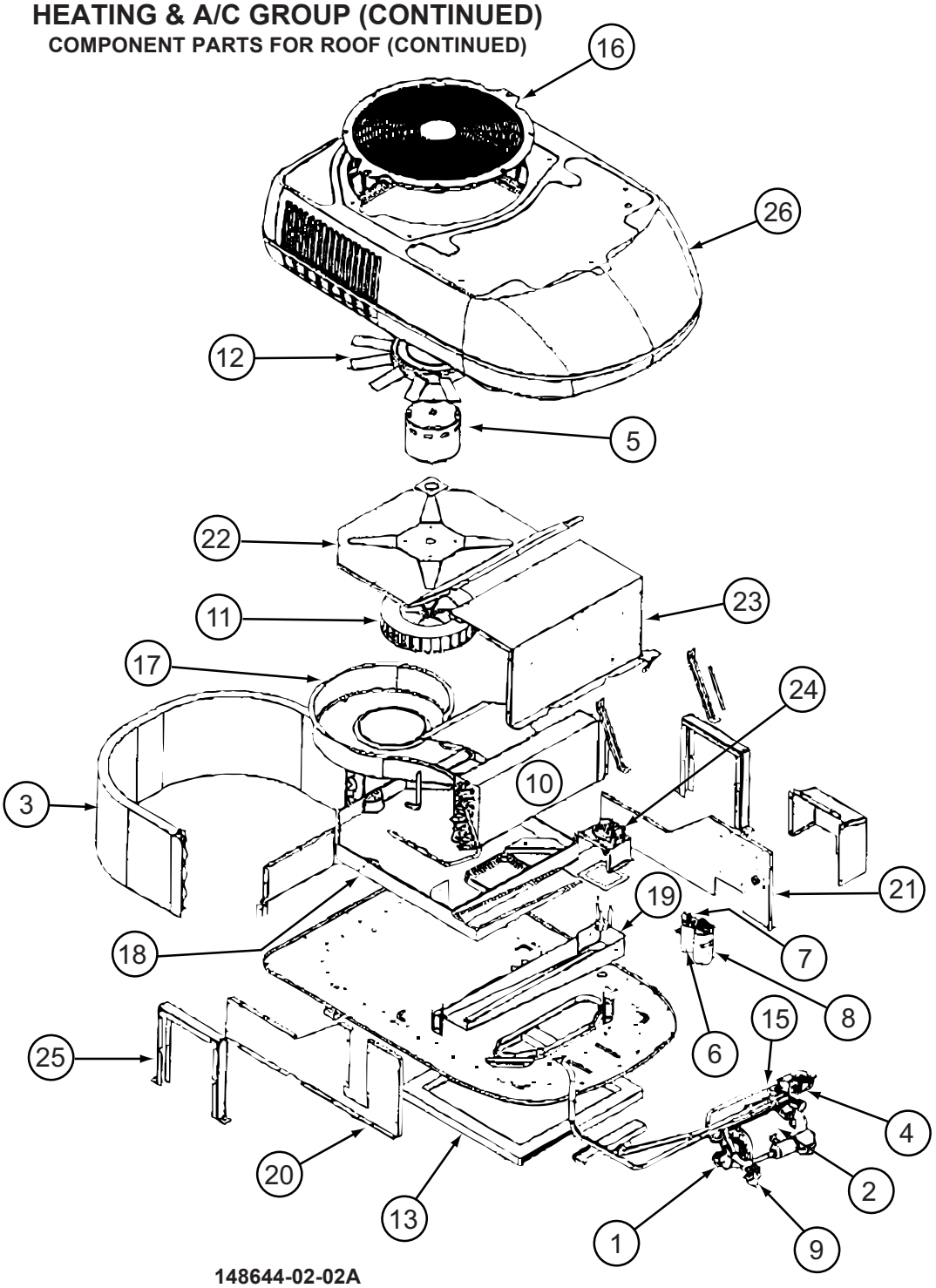

148644-02-02A

KEY	PART NUMBER	U/M	DESCRIPTION	VENDOR NO.
1	148644-01-701	EA	OVERLOAD	1450-0131
2	148644-01-702	EA	COMPRESSOR	1450A2189
3	148644-02-700	EA	COIL - CONDENSER	1452-1241
4	105620-12-708	EA	COIL - SOLENOID	1460-1081
5	148644-01-703	EA	MOTOR - BLOWER	1468A3239
6	105620-10-705	EA	PTCR (START DEVICE) - W/CAP.	8333A9021
7	093763-01-704	EA	CAPACITOR-FAN (INDOOR MOTOR)	1499-5461
8	131188-01-701	EA	RUN CAP. (COMP-40MFD/370V)	1499-5721
10	148644-02-701	EA	COIL - EVAPORATOR	1452-1261
11	147102-01-705	EA	BLOWER WHEEL	1472-1111
12	147102-01-706	EA	FAN BLADE	1472-5021
13	037648-01-714	EA	GASKET PACKAGE	8332-3301
16	148644-02-702	EA	GRILLE - F/FAN	9233A3151
26	148644-01-706	EA	SHROUD - (BLACK)	9233A5491

CONTACT WINNEBAGO PART SALES FOR UNLISTED COMPONENT(S)

COPYRIGHT © 2009 WINNEBAGO INDUSTRIES INC.

INTERIOR FINISH GROUP

MOLDINGS & TRIMS

HONEY CHERRY, BELMONT MAPLE

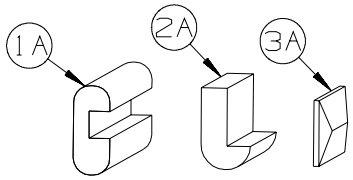

KEY	PART NUMBER	U/M	DESCRIPTION
1A	M09412-62-M52	EA	MOLDING/SHELF EDGE - .6" X 1.3" X 96" - CONCERT CHERRY
1A	M09412-62-M62	EA	MOLDING/SHELF EDGE - .6" X 1.3" X 96" - WASHED MAPLE
1A	M09412-62-RC3	EA	MOLDING/SHELF EDGE - .6" X 1.3" X 96" - HONEY CHERRY
1A	M09412-62-SA3	EA	MOLDING/SHELF EDGE - .6" X 1.3" X 96" - SIERRA MAPLE
1A	M09412-62-Y93	EA	MOLDING/SHELF EDGE - .6" X 1.3" X 96" - BELMOND MAPLE
2A	M09525-80-UM1	EA	MOLDING - TRIM - W/NOTCH - .8" X 1.4" X 86.5" - CONCERT CHERRY
2A	M09525-80-U91	EA	MOLDING - TRIM - W/NOTCH - .8" X 1.4" X 86.5" - WASHED MAPLE
2A	M09525-80-U92	EA	MOLDING - TRIM - W/NOTCH - .8" X 1.4" X 86.5" - SIERRA MAPLE
2A	M09525-80-Y92	EA	MOLDING - TRIM - W/NOTCH - .8" X 1.4" X 86.5" - HONEY CHERRY
2A	M09525-80-Y93	EA	MOLDING - TRIM - W/NOTCH - .8" X 1.4" X 86.5" - BELMONT MAPLE
2A	M09511-44-T78	EA	MOLDING - TRIM - W/NOTCH - 1" X 86.4" - CONCERT CHERRY
2A	M09511-44-T79	EA	MOLDING - TRIM - W/NOTCH - 1" X 86.4" - WASHED MAPLE
2A	M09511-44-T80	EA	MOLDING - TRIM - W/NOTCH - 1" X 86.4" - HONEY CHERRY
2A	M09577-47-YA0	EA	MOLDING - TRIM - W/NOTCH - 1" X 86.4" - CONCERT CHERRY
2A	M09577-47-YA1	EA	MOLDING - TRIM - W/NOTCH - 1" X 86.4" - HONEY CHERRY
2A	M09577-47-YA2	EA	MOLDING - TRIM - W/NOTCH - 1" X 86.4" - BELMONT MAPLE
2A	M09515-72-TD1	EA	MOLDING/TRIM - .8" X 2.2" X 86.1" - CONCERT CHERRY
2A	M09515-72-TD2	EA	MOLDING/TRIM - .8" X 2.2" X 86.1" - WASHED MAPLE
2A	M09515-72-TD3	EA	MOLDING/TRIM - .8" X 2.2" X 86.1" - SIERRA MAPLE
2A	M09553-87-YP2	EA	MOLDING/TRIM - .8" X 2.2" X 86.14" - BELMONT MAPLE
3A	M09568-37-YK0	EA	MOLDING - TRIM/VEE - .2" X 1" X 80.2" - CONCERT CHERRY
3A	M09568-37-YK1	EA	MOLDING - TRIM/VEE - .2" X 1" X 80.2" - HONEY CHERRY
3A	M09568-37-YK2	EA	MOLDING - TRIM/VEE - .2" X 1" X 80.2" - BELMONT MAPLE
3A	M09568-37-YK3	EA	MOLDING - TRIM/VEE - .2" X 1" X 80.2" - WASHED MAPLE
3A	M09568-40-YK0	EA	MOLDING - TRIM/VEE - .2" X 1" X 76.3" - CONCERT CHERRY
3A	M09568-40-YK1	EA	MOLDING - TRIM/VEE - .2" X 1" X 76.3" - HONEY CHERRY
3A	M09568-40-YK2	EA	MOLDING - TRIM/VEE - .2" X 1" X 76.3" - BELMONT MAPLE
3A	M09568-40-YK3	EA	MOLDING - TRIM/VEE - .2" X 1" X 76.3" - WASHED MAPLE
3A	M09568-41-YK0	EA	MOLDING - TRIM/VEE - .2" X 1" X 73.9" - CONCERT CHERRY
3A	M09568-41-YK1	EA	MOLDING - TRIM/VEE - .2" X 1" X 73.9" - HONEY CHERRY
3A	M09568-41-YK2	EA	MOLDING - TRIM/VEE - .2" X 1" X 73.9" - BELMONT MAPLE
3A	M09568-41-YK3	EA	MOLDING - TRIM/VEE - .2" X 1" X 73.9" - WASHED MAPLE
3A	M09568-42-YK0	EA	MOLDING - TRIM/VEE - .2" X 1" X 40.1" - CONCERT CHERRY
3A	M09568-42-YK1	EA	MOLDING - TRIM/VEE - .2" X 1" X 40.1" - HONEY CHERRY
3A	M09568-42-YK2	EA	MOLDING - TRIM/VEE - .2" X 1" X 40.1" - BELMONT MAPLE
3A	M09568-42-YK3	EA	MOLDING - TRIM/VEE - .2" X 1" X 40.1" - WASHED MAPLE
3A	M09568-44-YK0	EA	MOLDING - TRIM/VEE - .2" X 1" X 64.5" - CONCERT CHERRY
3A	M09568-44-YK1	EA	MOLDING - TRIM/VEE - .2" X 1" X 64.5" - HONEY CHERRY
3A	M09568-44-YK2	EA	MOLDING - TRIM/VEE - .2" X 1" X 64.5" - BELMONT MAPLE
3A	M09568-44-YK3	EA	MOLDING - TRIM/VEE - .2" X 1" X 64.5" - WASHED MAPLE
3A	M09501-30-SD1	EA	MOLDING - TRIM/VEE - .2" X 1" X 35.1" - CONCERT CHERRY
3A	M09501-30-SD2	EA	MOLDING - TRIM/VEE - .2" X 1" X 35.1" - WASHED MAPLE
3A	M09501-30-SD3	EA	MOLDING - TRIM/VEE - .2" X 1" X 35.1" - HONEY CHERRY
3A	M09515-97-WL4	EA	MOLDING - TRIM/VEE - .2" X 1" X 32.6" - CONCERT CHERRY
3A	M09515-97-WL5	EA	MOLDING - TRIM/VEE - .2" X 1" X 32.6" - WASHED MAPLE
3A	M09515-97-WL6	EA	MOLDING - TRIM/VEE - .2" X 1" X 32.6" - HONEY CHERRY
3A	M09515-97-YL6	EA	MOLDING - TRIM/VEE - .2" X 1" X 32.6" - BELMONT MAPLE
3A	M09566-11-YL4	EA	MOLDING - TRIM/VEE - .2" X 1" X 25.9" - CONCERT CHERRY
3A	M09566-11-YL5	EA	MOLDING - TRIM/VEE - .2" X 1" X 25.9" - HONEY CHERRY
3A	M09566-11-YL6	EA	MOLDING - TRIM/VEE - .2" X 1" X 25.9" - BELMONT MAPLE
3A	M09566-11-YL7	EA	MOLDING - TRIM/VEE - .2" X 1" X 25.9" - WASHED MAPLE
3A	M09534-17-UF3	EA	MOLDING - TRIM/VEE - .2" X 1" X 20.1" - SIERRA MAPLE
3A	M09534-17-UJ1	EA	MOLDING - TRIM/VEE - .2" X 1" X 20.1" - CONCERT CHERRY
3A	M09534-17-UJ2	EA	MOLDING - TRIM/VEE - .2" X 1" X 20.1" - WASHED MAPLE
3A	M09534-17-UJ3	EA	MOLDING - TRIM/VEE - .2" X 1" X 20.1" - HONEY CHERRY
3A	M09534-17-YG3	EA	MOLDING - TRIM/VEE - .2" X 1" X 20.1" - BELMONT MAPLE
3A	M09477-88-S34	EA	MOLDING - TRIM/VEE - .2" X 1" X 19.9" - WASHED MAPLE
3A	M09477-88-S35	EA	MOLDING - TRIM/VEE - .2" X 1" X 19.9" - SIERRA MAPLE
3A	M09477-88-YA0	EA	MOLDING - TRIM/VEE - .2" X 1" X 19.9" - CONCERT CHERRY
3A	M09477-88-Y37	EA	MOLDING - TRIM/VEE - .2" X 1" X 19.9" - HONEY CHERRY
3A	M09477-88-Y38	EA	MOLDING - TRIM/VEE - .2" X 1" X 19.9" - BELMONT MAPLE
3A	M09568-43-YK0	EA	MOLDING - TRIM/VEE - .2" X 1" X 18.5" - CONCERT CHERRY

COPYRIGHT © 2009 WINNEBAGO INDUSTRIES INC.

INTERIOR FINISH GROUP (CONTINUED)

MOLDINGS & TRIMS (CONTINUED)

KEY	PART NUMBER	U/M	DESCRIPTION
3A	M09568-43-YK1	EA	MOLDING - TRIM/VEE - .2" X 1" X 18.5" - HONEY CHERRY
3A	M09568-43-YK2	EA	MOLDING - TRIM/VEE - .2" X 1" X 18.5" - BELMONT MAPLE
3A	M09568-43-YK3	EA	MOLDING - TRIM/VEE - .2" X 1" X 18.5" - WASHED MAPLE
3A	M09515-71-Y37	EA	MOLDING - TRIM/VEE - .2" X 1" X 14.9" - HONEY CHERRY
3A	M09515-71-Y38	EA	MOLDING - TRIM/VEE - .2" X 1" X 14.9" - BELMONT MAPLE
3A	M09583-16-Y65	EA	MOLDING - TRIM/VEE - .2" X 1" X 13.3" - HONEY CHERRY
3A	M09583-16-YP0	EA	MOLDING - TRIM/VEE - .2" X 1" X 13.3" - SIERRA MAPLE
3A	M09583-16-YP1	EA	MOLDING - TRIM/VEE - .2" X 1" X 13.3" - CONCERT CHERRY
3A	M09583-16-YP2	EA	MOLDING - TRIM/VEE - .2" X 1" X 13.3" - BELMONT MAPLE
3A	M09566-04-YB0	EA	MOLDING - TRIM/VEE - .2" X 1" X 8.9" - CONCERT CHERRY
3A	M09566-04-WD3	EA	MOLDING - TRIM/VEE - .2" X 1" X 8.9" - HONEY CHERRY
3A	M09553-29-WH4	EA	MOLDING - TRIM/VEE - .4" X 1" X 94.4" - CONCERT CHERRY
3A	M09553-29-WH5	EA	MOLDING - TRIM/VEE - .4" X 1" X 94.4" - WASHED MAPLE
3A	M09553-29-WH6	EA	MOLDING - TRIM/VEE - .4" X 1" X 94.4" - SIERRA MAPLE
3A	M09553-29-YH7	EA	MOLDING - TRIM/VEE - .4" X 1" X 94.4" - BELMONT MAPLE
3A	M09553-29-YR3	EA	MOLDING - TRIM/VEE - .4" X 1" X 94.4" - HONEY CHERRY
3A	M09565-04-WH4	EA	MOLDING - TRIM/VEE - .4" X 1" X 89.5" - CONCERT CHERRY
3A	M09565-04-WH5	EA	MOLDING - TRIM/VEE - .4" X 1" X 89.5" - WASHED MAPLE
3A	M09565-04-WH6	EA	MOLDING - TRIM/VEE - .4" X 1" X 89.5" - SIERRA MAPLE
3A	M09565-04-YH7	EA	MOLDING - TRIM/VEE - .4" X 1" X 89.5" - BELMONT MAPLE
3A	M09565-04-YR3	EA	MOLDING - TRIM/VEE - .4" X 1" X 89.5" - HONEY CHERRY
3A	M09544-86-W37	EA	MOLDING - TRIM/VEE - .4" X 1" X 88.1" - SIERRA MAPLE
3A	M09544-86-W38	EA	MOLDING - TRIM/VEE - .4" X 1" X 88.1" - WASHED MAPLE
3A	M09538-39-U67	EA	MOLDING - TRIM/VEE - .4" X 1" X 82.6" - WASHED MAPLE
3A	M09538-39-U68	EA	MOLDING - TRIM/VEE - .4" X 1" X 82.6" - SIERRA MAPLE
3A	M09538-39-Y80	EA	MOLDING - TRIM/VEE - .4" X 1" X 82.6" - CONCERT CHERRY
3A	M09538-39-Y81	EA	MOLDING - TRIM/VEE - .4" X 1" X 82.6" - BELMONT MAPLE
3A	M09553-62-WH4	EA	MOLDING - TRIM/VEE - .4" X 1" X 81.4" - CONCERT CHERRY
3A	M09553-62-WH5	EA	MOLDING - TRIM/VEE - .4" X 1" X 81.4" - WASHED MAPLE
3A	M09553-62-WH6	EA	MOLDING - TRIM/VEE - .4" X 1" X 81.4" - SIERRA MAPLE
3A	M09553-62-YH7	EA	MOLDING - TRIM/VEE - .4" X 1" X 81.4" - BELMONT MAPLE
3A	M09553-62-YR3	EA	MOLDING - TRIM/VEE - .4" X 1" X 81.4" - HONEY CHERRY
3A	M09568-67-YL4	EA	MOLDING - TRIM/VEE - .4" X 1" X 81" - CONCERT CHERRY
3A	M09568-67-YL5	EA	MOLDING - TRIM/VEE - .4" X 1" X 81" - HONEY CHERRY
3A	M09568-67-YL6	EA	MOLDING - TRIM/VEE - .4" X 1" X 81" - BELMONT MAPLE
3A	M09568-67-YL7	EA	MOLDING - TRIM/VEE - .4" X 1" X 81" - WASHED MAPLE
3A	M09577-98-WH4	EA	MOLDING - TRIM/VEE - .4" X 1" X 80.2" - CONCERT CHERRY
3A	M09577-98-WH5	EA	MOLDING - TRIM/VEE - .4" X 1" X 80.2" - WASHED MAPLE
3A	M09577-98-WH6	EA	MOLDING - TRIM/VEE - .4" X 1" X 80.2" - SIERRA MAPLE
3A	M09577-98-YL5	EA	MOLDING - TRIM/VEE - .4" X 1" X 80.2" - HONEY CHERRY
3A	M09577-98-YL6	EA	MOLDING - TRIM/VEE - .4" X 1" X 80.2" - BELMONT MAPLE
3A	M09583-06-YL4	EA	MOLDING - TRIM/VEE - .4" X 1" X 79.3" - CONCERT CHERRY
3A	M09583-06-YL5	EA	MOLDING - TRIM/VEE - .4" X 1" X 79.3" - HONEY CHERRY
3A	M09583-06-YL6	EA	MOLDING - TRIM/VEE - .4" X 1" X 79.3" - BELMONT MAPLE
3A	M09583-06-YL7	EA	MOLDING - TRIM/VEE - .4" X 1" X 79.3" - WASHED MAPLE
3A	M09538-37-U67	EA	MOLDING - TRIM/VEE - .4" X 1" X 77.5" - WASHED MAPLE
3A	M09538-37-U68	EA	MOLDING - TRIM/VEE - .4" X 1" X 77.5" - SIERRA MAPLE
3A	M09538-37-Y80	EA	MOLDING - TRIM/VEE - .4" X 1" X 77.5" - CONCERT CHERRY
3A	M09538-37-Y81	EA	MOLDING - TRIM/VEE - .4" X 1" X 77.5" - BELMONT MAPLE
3A	M09553-65-WH4	EA	MOLDING - TRIM/VEE - .4" X 1" X 77" - CONCERT CHERRY
3A	M09553-65-WH5	EA	MOLDING - TRIM/VEE - .4" X 1" X 77" - WASHED MAPLE
3A	M09553-65-WH6	EA	MOLDING - TRIM/VEE - .4" X 1" X 77" - SIERRA MAPLE
3A	M09553-65-YH7	EA	MOLDING - TRIM/VEE - .4" X 1" X 77" - BELMONT MAPLE
3A	M09553-65-YR3	EA	MOLDING - TRIM/VEE - .4" X 1" X 77" - HONEY CHERRY
3A	M09553-64-WH4	EA	MOLDING - TRIM/VEE - .4" X 1" X 76.7" - CONCERT CHERRY
3A	M09553-64-WH5	EA	MOLDING - TRIM/VEE - .4" X 1" X 76.7" - WASHED MAPLE
3A	M09553-64-WH6	EA	MOLDING - TRIM/VEE - .4" X 1" X 76.7" - SIERRA MAPLE
3A	M09553-64-YH7	EA	MOLDING - TRIM/VEE - .4" X 1" X 76.7" - BELMONT MAPLE
3A	M09553-64-YR3	EA	MOLDING - TRIM/VEE - .4" X 1" X 76.7" - HONEY CHERRY
3A	M09577-14-Y79	EA	MOLDING - TRIM/VEE - .4" X 1" X 76.2" - SIERRA MAPLE
3A	M09577-14-Y80	EA	MOLDING - TRIM/VEE - .4" X 1" X 76.2" - CONCERT CHERRY
3A	M09577-14-Y81	EA	MOLDING - TRIM/VEE - .4" X 1" X 76.2" - BELMONT MAPLE
3A	M09583-63-Y91	EA	MOLDING - TRIM/VEE - .4" X 1" X 75.3" - CONCERT CHERRY
3A	M09583-63-Y92	EA	MOLDING - TRIM/VEE - .4" X 1" X 75.3" - HONEY CHERRY

COPYRIGHT © 2009 WINNEBAGO INDUSTRIES INC.

INTERIOR FINISH GROUP (CONTINUED)

MOLDINGS & TRIMS (CONTINUED)

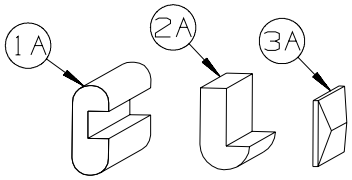

KEY	PART NUMBER	U/M	DESCRIPTION
3A	M09583-63-Y93	EA	MOLDING - TRIM/VEE - .4" X 1" X 75.3" - BELMONT MAPLE
3A	M09503-75-T78	EA	MOLDING - TRIM/VEE - .4" X 1" X 81" - CONCERT CHERRY
3A	M09503-75-YL5	EA	MOLDING - TRIM/VEE - .4" X 1" X 81" - HONEY CHERRY
3A	M09503-75-YL6	EA	MOLDING - TRIM/VEE - .4" X 1" X 81" - BELMONT MAPLE
3A	M09503-75-T79	EA	MOLDING - TRIM/VEE - .4" X 1" X 81" - WASHED MAPLE
3A	M09553-26-WH4	EA	MOLDING - TRIM/VEE - .4" X 1" X 74.1" - CONCERT CHERRY
3A	M09553-26-WH5	EA	MOLDING - TRIM/VEE - .4" X 1" X 74.1" - WASHED MAPLE
3A	M09553-26-WH6	EA	MOLDING - TRIM/VEE - .4" X 1" X 74.1" - SIERRA MAPLE
3A	M09553-26-YH7	EA	MOLDING - TRIM/VEE - .4" X 1" X 74.1" - BELMONT MAPLE
3A	M09553-26-YR3	EA	MOLDING - TRIM/VEE - .4" X 1" X 74.1" - HONEY CHERRY
3A	M09538-91-WH4	EA	MOLDING - TRIM/VEE - .4" X 1" X 73.8" - CONCERT CHERRY
3A	M09538-91-WH5	EA	MOLDING - TRIM/VEE - .4" X 1" X 73.8" - WASHED MAPLE
3A	M09538-91-WH6	EA	MOLDING - TRIM/VEE - .4" X 1" X 73.8" - SIERRA MAPLE
3A	M09538-91-YH7	EA	MOLDING - TRIM/VEE - .4" X 1" X 73.8" - BELMONT MAPLE
3A	M09538-91-YR3	EA	MOLDING - TRIM/VEE - .4" X 1" X 73.8" - HONEY CHERRY
3A	M09583-62-Y91	EA	MOLDING - TRIM/VEE - .4" X 1" X 73" - CONCERT CHERRY
3A	M09583-62-Y92	EA	MOLDING - TRIM/VEE - .4" X 1" X 73" - HONEY CHERRY
3A	M09583-62-Y93	EA	MOLDING - TRIM/VEE - .4" X 1" X 73" - BELMONT MAPLE
3A	M09568-71-YL4	EA	MOLDING - TRIM/VEE - .4" X 1" X 72.7" - CONCERT CHERRY
3A	M09568-71-YL5	EA	MOLDING - TRIM/VEE - .4" X 1" X 72.7" - HONEY CHERRY
3A	M09568-71-YL6	EA	MOLDING - TRIM/VEE - .4" X 1" X 72.7" - BELMONT MAPLE
3A	M09568-71-YL7	EA	MOLDING - TRIM/VEE - .4" X 1" X 72.7" - WASHED MAPLE
3A	M09565-97-WH4	EA	MOLDING - TRIM/VEE - .4" X 1" X 72.6" - CONCERT CHERRY
3A	M09565-97-WH5	EA	MOLDING - TRIM/VEE - .4" X 1" X 72.6" - WASHED MAPLE
3A	M09565-97-WH6	EA	MOLDING - TRIM/VEE - .4" X 1" X 72.6" - SIERRA MAPLE
3A	M09565-97-YH7	EA	MOLDING - TRIM/VEE - .4" X 1" X 72.6" - BELMONT MAPLE
3A	M09565-97-YR3	EA	MOLDING - TRIM/VEE - .4" X 1" X 72.6" - HONEY CHERRY
3A	M09568-12-WH4	EA	MOLDING - TRIM/VEE - .4" X 1" X 71.9" - CONCERT CHERRY
3A	M09568-12-WH5	EA	MOLDING - TRIM/VEE - .4" X 1" X 71.9" - WASHED MAPLE
3A	M09568-12-WH6	EA	MOLDING - TRIM/VEE - .4" X 1" X 71.9" - SIERRA MAPLE
3A	M09568-12-YH7	EA	MOLDING - TRIM/VEE - .4" X 1" X 71.9" - BELMONT MAPLE
3A	M09568-12-YR3	EA	MOLDING - TRIM/VEE - .4" X 1" X 71.9" - HONEY CHERRY
3A	M09565-01-WH4	EA	MOLDING - TRIM/VEE - .4" X 1" X 71.7" - CONCERT CHERRY
3A	M09565-01-WH5	EA	MOLDING - TRIM/VEE - .4" X 1" X 71.7" - WASHED MAPLE
3A	M09565-01-WH6	EA	MOLDING - TRIM/VEE - .4" X 1" X 71.7" - SIERRA MAPLE
3A	M09565-01-YH7	EA	MOLDING - TRIM/VEE - .4" X 1" X 71.7" - BELMONT MAPLE
3A	M09565-01-YR3	EA	MOLDING - TRIM/VEE - .4" X 1" X 71.7" - HONEY CHERRY
3A	M09544-15-WB4	EA	MOLDING - TRIM/VEE - .4" X 1" X 64.5" - CONCERT CHERRY
3A	M09544-15-WB5	EA	MOLDING - TRIM/VEE - .4" X 1" X 64.5" - WASHED MAPLE
3A	M09544-15-WB6	EA	MOLDING - TRIM/VEE - .4" X 1" X 64.5" - SIERRA MAPLE
3A	M09544-15-Y92	EA	MOLDING - TRIM/VEE - .4" X 1" X 64.5" - HONEY CHERRY
3A	M09544-15-Y93	EA	MOLDING - TRIM/VEE - .4" X 1" X 64.5" - BELMONT MAPLE
3A	M09538-94-WH4	EA	MOLDING - TRIM/VEE - .4" X 1" X 71.1" - CONCERT CHERRY
3A	M09538-94-WH5	EA	MOLDING - TRIM/VEE - .4" X 1" X 71.1" - WASHED MAPLE
3A	M09538-94-WH6	EA	MOLDING - TRIM/VEE - .4" X 1" X 71.1" - SIERRA MAPLE
3A	M09538-94-YH7	EA	MOLDING - TRIM/VEE - .4" X 1" X 71.1" - BELMONT MAPLE
3A	M09538-94-YR3	EA	MOLDING - TRIM/VEE - .4" X 1" X 71.1" - HONEY CHERRY
3A	M09565-78-WH4	EA	MOLDING - TRIM/VEE - .4" X 1" X 70.2" - CONCERT CHERRY
3A	M09565-78-WH5	EA	MOLDING - TRIM/VEE - .4" X 1" X 70.2" - WASHED MAPLE
3A	M09565-78-WH6	EA	MOLDING - TRIM/VEE - .4" X 1" X 70.2" - SIERRA MAPLE
3A	M09565-78-YH7	EA	MOLDING - TRIM/VEE - .4" X 1" X 70.2" - BELMONT MAPLE
3A	M09565-78-YR3	EA	MOLDING - TRIM/VEE - .4" X 1" X 70.2" - HONEY CHERRY
3A	M09501-92-T78	EA	MOLDING - TRIM/VEE - .4" X 1" X 70" - CONCERT CHERRY
3A	M09501-92-T79	EA	MOLDING - TRIM/VEE - .4" X 1" X 70" - WASHED MAPLE
3A	M09501-92-T80	EA	MOLDING - TRIM/VEE - .4" X 1" X 70" - SIERRA MAPLE
3A	M09501-92-Y81	EA	MOLDING - TRIM/VEE - .4" X 1" X 70" - BELMONT MAPLE
3A	M09538-27-WH4	EA	MOLDING - TRIM/VEE - .4" X 1" X 71.1" - CONCERT CHERRY
3A	M09538-27-U67	EA	MOLDING - TRIM/VEE - .4" X 1" X 71.1" - WASHED MAPLE
3A	M09538-27-U68	EA	MOLDING - TRIM/VEE - .4" X 1" X 71.1" - SIERRA MAPLE
3A	M09538-27-Y81	EA	MOLDING - TRIM/VEE - .4" X 1" X 71.1" - BELMONT MAPLE
3A	M09538-27-YR3	EA	MOLDING - TRIM/VEE - .4" X 1" X 71.1" - HONEY CHERRY
3A	M09568-08-Y91	EA	MOLDING - TRIM/VEE - .4" X 1" X 66.9" - CONCERT CHERRY

COPYRIGHT © 2009 WINNEBAGO INDUSTRIES INC.

INTERIOR FINISH GROUP (CONTINUED)

MOLDINGS & TRIMS (CONTINUED)

KEY	PART NUMBER	U/M	DESCRIPTION
3A	M09568-08-Y92	EA	MOLDING - TRIM/VEE - .4" X 1" X 66.9" - HONEY CHERRY
3A	M09568-08-Y93	EA	MOLDING - TRIM/VEE - .4" X 1" X 66.9" - BELMONT MAPLE
3A	M09553-03-WH4	EA	MOLDING - TRIM/VEE - .4" X 1" X 66.7" - CONCERT CHERRY
3A	M09553-03-WH5	EA	MOLDING - TRIM/VEE - .4" X 1" X 66.7" - WASHED MAPLE
3A	M09553-03-WH6	EA	MOLDING - TRIM/VEE - .4" X 1" X 66.7" - SIERRA MAPLE
3A	M09553-03-YH7	EA	MOLDING - TRIM/VEE - .4" X 1" X 66.7" - BELMONT MAPLE
3A	M09553-03-YR3	EA	MOLDING - TRIM/VEE - .4" X 1" X 66.7" - HONEY CHERRY
3A	M09538-93-WH4	EA	MOLDING - TRIM/VEE - .4" X 1" X 66.6" - CONCERT CHERRY
3A	M09538-93-WH5	EA	MOLDING - TRIM/VEE - .4" X 1" X 66.6" - WASHED MAPLE
3A	M09538-93-WH6	EA	MOLDING - TRIM/VEE - .4" X 1" X 66.6" - SIERRA MAPLE
3A	M09538-93-YH7	EA	MOLDING - TRIM/VEE - .4" X 1" X 66.6" - BELMONT MAPLE
3A	M09538-93-YR3	EA	MOLDING - TRIM/VEE - .4" X 1" X 66.6" - HONEY CHERRY
3A	M09544-33-W37	EA	MOLDING - TRIM/VEE - .4" X 1" X 66.5" - SIERRA MAPLE
3A	M09544-33-W38	EA	MOLDING - TRIM/VEE - .4" X 1" X 66.5" - WASHED MAPLE
3A	M09553-02-WH4	EA	MOLDING - TRIM/VEE - .4" X 1" X 66.4" - CONCERT CHERRY
3A	M09553-02-WH5	EA	MOLDING - TRIM/VEE - .4" X 1" X 66.4" - WASHED MAPLE
3A	M09553-02-WH6	EA	MOLDING - TRIM/VEE - .4" X 1" X 66.4" - SIERRA MAPLE
3A	M09553-02-YH7	EA	MOLDING - TRIM/VEE - .4" X 1" X 66.4" - BELMONT MAPLE
3A	M09553-02-YR3	EA	MOLDING - TRIM/VEE - .4" X 1" X 66.4" - HONEY CHERRY
3A	M09544-14-WB4	EA	MOLDING - TRIM/VEE - .4" X 1" X 64.5" - CONCERT CHERRY
3A	M09544-14-WB5	EA	MOLDING - TRIM/VEE - .4" X 1" X 64.5" - WASHED MAPLE
3A	M09544-14-WB6	EA	MOLDING - TRIM/VEE - .4" X 1" X 64.5" - SIERRA MAPLE
3A	M09544-14-Y92	EA	MOLDING - TRIM/VEE - .4" X 1" X 64.5" - HONEY CHERRY
3A	M09544-14-Y93	EA	MOLDING - TRIM/VEE - .4" X 1" X 64.5" - BELMONT MAPLE
3A	M09515-78-T78	EA	MOLDING - TRIM/VEE - .4" X 1" X 64.1" - CONCERT CHERRY
3A	M09515-78-T79	EA	MOLDING - TRIM/VEE - .4" X 1" X 64.1" - WASHED MAPLE
3A	M09515-78-T80	EA	MOLDING - TRIM/VEE - .4" X 1" X 64.1" - SIERRA MAPLE
3A	M09515-78-Y81	EA	MOLDING - TRIM/VEE - .4" X 1" X 64.1" - BELMONT MAPLE
3A	M09501-91-T78	EA	MOLDING - TRIM/VEE - .4" X 1" X 63.3" - CONCERT CHERRY
3A	M09501-91-T79	EA	MOLDING - TRIM/VEE - .4" X 1" X 63.3" - WASHED MAPLE
3A	M09501-91-T80	EA	MOLDING - TRIM/VEE - .4" X 1" X 63.3" - SIERRA MAPLE
3A	M09501-91-Y92	EA	MOLDING - TRIM/VEE - .4" X 1" X 63.3" - HONEY CHERRY
3A	M09501-91-Y93	EA	MOLDING - TRIM/VEE - .4" X 1" X 63.3" - BELMONT MAPLE
3A	M09503-91-T78	EA	MOLDING - TRIM/VEE - .4" X 1" X 63.1" - CONCERT CHERRY
3A	M09503-91-T79	EA	MOLDING - TRIM/VEE - .4" X 1" X 63.1" - WASHED MAPLE
3A	M09503-91-T80	EA	MOLDING - TRIM/VEE - .4" X 1" X 63.1" - SIERRA MAPLE
3A	M09503-91-Y92	EA	MOLDING - TRIM/VEE - .4" X 1" X 63.1" - HONEY CHERRY
3A	M09503-91-Y93	EA	MOLDING - TRIM/VEE - .4" X 1" X 63.1" - BELMONT MAPLE
3A	M09568-73-YL4	EA	MOLDING - TRIM/VEE - .4" X 1" X 62.3" - CONCERT CHERRY
3A	M09568-73-YL5	EA	MOLDING - TRIM/VEE - .4" X 1" X 62.3" - HONEY CHERRY
3A	M09568-73-YL6	EA	MOLDING - TRIM/VEE - .4" X 1" X 62.3" - BELMONT MAPLE
3A	M09568-73-YL7	EA	MOLDING - TRIM/VEE - .4" X 1" X 62.3" - WASHED MAPLE
3A	M09544-22-WB4	EA	MOLDING - TRIM/VEE - .4" X 1" X 61.7" - CONCERT CHERRY
3A	M09544-22-WB5	EA	MOLDING - TRIM/VEE - .4" X 1" X 61.7" - WASHED MAPLE
3A	M09544-22-WB6	EA	MOLDING - TRIM/VEE - .4" X 1" X 61.7" - SIERRA MAPLE
3A	M09544-22-YL5	EA	MOLDING - TRIM/VEE - .4" X 1" X 61.7" - HONEY CHERRY
3A	M09544-22-YL6	EA	MOLDING - TRIM/VEE - .4" X 1" X 61.7" - BELMONT MAPLE
3A	M09583-41-WH4	EA	MOLDING - TRIM/VEE - .4" X 1" X 61" - CONCERT CHERRY
3A	M09583-41-WH5	EA	MOLDING - TRIM/VEE - .4" X 1" X 61" - WASHED MAPLE
3A	M09583-41-WH6	EA	MOLDING - TRIM/VEE - .4" X 1" X 61" - SIERRA MAPLE
3A	M09583-41-YH7	EA	MOLDING - TRIM/VEE - .4" X 1" X 61" - BELMONT MAPLE
3A	M09583-41-YR3	EA	MOLDING - TRIM/VEE - .4" X 1" X 61" - HONEY CHERRY
3A	M09566-15-Y79	EA	MOLDING - TRIM/VEE - .4" X 1" X 60.2" - SIERRA MAPLE
3A	M09566-15-Y80	EA	MOLDING - TRIM/VEE - .4" X 1" X 60.2" - CONCERT CHERRY
3A	M09566-15-Y81	EA	MOLDING - TRIM/VEE - .4" X 1" X 60.2" - BELMONT MAPLE
3A	M09568-72-YL4	EA	MOLDING - TRIM/VEE - .4" X 1" X 58.8" - CONCERT CHERRY
3A	M09568-72-YL5	EA	MOLDING - TRIM/VEE - .4" X 1" X 58.8" - HONEY CHERRY
3A	M09568-72-YL6	EA	MOLDING - TRIM/VEE - .4" X 1" X 58.8" - BELMONT MAPLE
3A	M09568-72-YL7	EA	MOLDING - TRIM/VEE - .4" X 1" X 58.8" - WASHED MAPLE
3A	M09565-49-WH4	EA	MOLDING - TRIM/VEE - .4" X 1" X 58.7" - CONCERT CHERRY
3A	M09565-49-WH5	EA	MOLDING - TRIM/VEE - .4" X 1" X 58.7" - WASHED MAPLE
3A	M09565-49-WH6	EA	MOLDING - TRIM/VEE - .4" X 1" X 58.7" - SIERRA MAPLE
3A	M09565-49-YH7	EA	MOLDING - TRIM/VEE - .4" X 1" X 58.7" - BELMONT MAPLE
3A	M09565-49-YR3	EA	MOLDING - TRIM/VEE - .4" X 1" X 58.7" - HONEY CHERRY

COPYRIGHT © 2009 WINNEBAGO INDUSTRIES INC.

INTERIOR FINISH GROUP (CONTINUED)

MOLDINGS & TRIMS (CONTINUED)

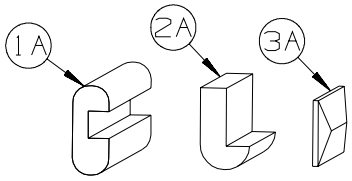

KEY	PART NUMBER	U/M	DESCRIPTION
3A	M09553-85-WB4	EA	MOLDING - TRIM/VEE - .4" X 1" X 43.4" - CONCERT CHERRY
3A	M09553-85-WB5	EA	MOLDING - TRIM/VEE - .4" X 1" X 43.4" - WASHED MAPLE
3A	M09553-85-WB6	EA	MOLDING - TRIM/VEE - .4" X 1" X 43.4" - SIERRA MAPLE
3A	M09553-85-Y92	EA	MOLDING - TRIM/VEE - .4" X 1" X 43.4" - HONEY CHERRY
3A	M09553-85-Y93	EA	MOLDING - TRIM/VEE - .4" X 1" X 43.4" - BELMONT MAPLE
3A	M09553-28-WH4	EA	MOLDING - TRIM/VEE - .4" X 1" X 48" - CONCERT CHERRY
3A	M09553-28-WH5	EA	MOLDING - TRIM/VEE - .4" X 1" X 48" - WASHED MAPLE
3A	M09553-28-WH6	EA	MOLDING - TRIM/VEE - .4" X 1" X 48" - SIERRA MAPLE
3A	M09553-28-YH7	EA	MOLDING - TRIM/VEE - .4" X 1" X 48" - BELMONT MAPLE
3A	M09553-28-YR3	EA	MOLDING - TRIM/VEE - .4" X 1" X 48" - HONEY CHERRY
3A	M09544-24-WB4	EA	MOLDING - TRIM/VEE - .4" X 1" X 46.2" - CONCERT CHERRY
3A	M09544-24-WB5	EA	MOLDING - TRIM/VEE - .4" X 1" X 46.2" - WASHED MAPLE
3A	M09544-24-WB6	EA	MOLDING - TRIM/VEE - .4" X 1" X 46.2" - SIERRA MAPLE
3A	M09544-24-Y92	EA	MOLDING - TRIM/VEE - .4" X 1" X 46.2" - HONEY CHERRY
3A	M09544-24-Y93	EA	MOLDING - TRIM/VEE - .4" X 1" X 46.2" - BELMONT MAPLE
3A	M09565-77-WH4	EA	MOLDING - TRIM/VEE - .4" X 1" X 42.5" - CONCERT CHERRY
3A	M09565-77-WH5	EA	MOLDING - TRIM/VEE - .4" X 1" X 42.5" - WASHED MAPLE
3A	M09565-77-WH6	EA	MOLDING - TRIM/VEE - .4" X 1" X 42.5" - SIERRA MAPLE
3A	M09565-77-YH7	EA	MOLDING - TRIM/VEE - .4" X 1" X 42.5" - BELMONT MAPLE
3A	M09565-77-YR3	EA	MOLDING - TRIM/VEE - .4" X 1" X 42.5" - HONEY CHERRY
3A	M09544-56-WB4	EA	MOLDING - TRIM/VEE - .4" X 1" X 6.1" - CONCERT CHERRY
3A	M09544-56-WB5	EA	MOLDING - TRIM/VEE - .4" X 1" X 6.1" - WASHED MAPLE
3A	M09544-56-WB6	EA	MOLDING - TRIM/VEE - .4" X 1" X 6.1" - SIERRA MAPLE
3A	M09538-70-Y91	EA	MOLDING - TRIM/VEE - .4" X 1" X 63.9" - CONCERT CHERRY
3A	M09538-70-U68	EA	MOLDING - TRIM/VEE - .4" X 1" X 63.9" - SIERRA MAPLE
3A	M09538-70-U67	EA	MOLDING - TRIM/VEE - .4" X 1" X 63.9" - WASHED MAPLE
3A	M09538-70-Y92	EA	MOLDING - TRIM/VEE - .4" X 1" X 63.9" - HONEY CHERRY
3A	M09538-70-Y93	EA	MOLDING - TRIM/VEE - .4" X 1" X 63.9" - BELMONT MAPLE

COPYRIGHT © 2009 WINNEBAGO INDUSTRIES INC.

INTERIOR FINISH GROUP (CONTINUED)

MOLDINGS & TRIMS (CONTINUED)

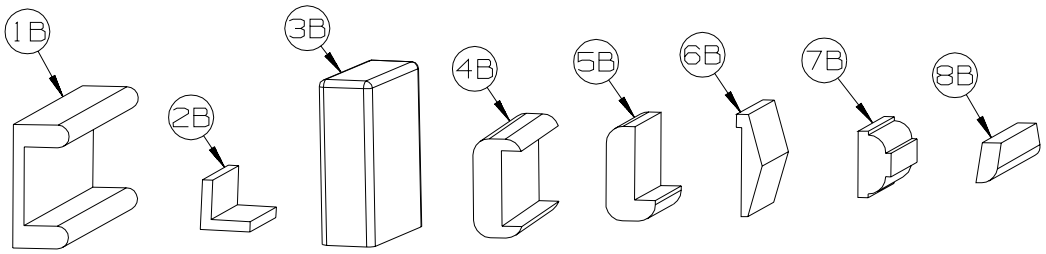

KEY	PART NUMBER	U/M	DESCRIPTION
1B	M09501-84-TG1	EA	MOLDING/TRIM - CAP/WALL - 2.2" X 85.9" - CONCERT CHERRY
1B	M09501-84-TG2	EA	MOLDING/TRIM - CAP/WALL - 2.2" X 85.9" - WASHED MAPLE
1B	M09501-84-TG3	EA	MOLDING/TRIM - CAP/WALL - 2.2" X 85.9" - HONEY CHERRY
1B	M09520-04-TD3	EA	MOLDING/TRIM - CAP/WALL - 2.2" X 80.5" - SIERRA MAPLE
1B	M09534-34-Y93	EA	MOLDING/TRIM - CAP/WALL - 2.2" X 80.5" - BELMONT MAPLE
2B	M09511-81-TA1	EA	MOLDING/TRIM - L SHAPE - .8"X .8"X 80.2" - CONCERT CHERRY
2B	M09511-81-TA2	EA	MOLDING/TRIM - L SHAPE - .8"X .8"X 80.2" - WASHED MAPLE
2B	M09511-81-TA3	EA	MOLDING/TRIM - L SHAPE - .8"X .8"X 80.2" - SIERRA MAPLE
2B	M09565-21-YL5	EA	MOLDING/TRIM - L SHAPE - .8"X .8"X 47.7" - HONEY CHERRY
2B	M09565-21-YL6	EA	MOLDING/TRIM - L SHAPE - .8"X .8"X 47.7" - BELMONT MAPLE
3B	M09515-81-T01	EA	MOLDING/HARDWOOD STRAIGHT - 74.3” - WASHED MAPLE
3B	M09515-81-T02	EA	MOLDING/HARDWOOD STRAIGHT - 74.3” - HONEY CHERRY
4B	M09511-42-T78	EA	MOLDING - TRIM - W/NOTCH - 1.5" X 86.4" - CONCERT CHERRY
4B	M09511-42-T79	EA	MOLDING - TRIM - W/NOTCH - 1.5" X 86.4" - WASHED MAPLE
4B	M09511-42-T80	EA	MOLDING - TRIM - W/NOTCH - 1.5" X 86.4" - SIERRA MAPLE
4B	M09511-42-W66	EA	MOLDING - TRIM - W/NOTCH - 1.5" X 86.4" - HONEY CHERRY
4B	M09511-42-YN2	EA	MOLDING - TRIM - W/NOTCH - 1.5" X 86.4" - BELMONT MAPLE
5B	M09515-18-T78	EA	MOLDING - HARDWOOD-W/NOTCH - 1.4"X 86.2" - CONCERT CHERRY
5B	M09553-66-U22	EA	MOLDING - HARDWOOD-W/NOTCH - 1.4"X 96" - WASHED MAPLE
5B	M09515-18-T80	EA	MOLDING - HARDWOOD-W/NOTCH - 1.4"X 86.2" - SIERRA MAPLE
5B	M09553-66-U21	EA	MOLDING - HARDWOOD-W/NOTCH - 1.4"X 96" - HONEY CHERRY
5B	M09515-12-YG3	EA	MOLDING - HARDWOOD-W/NOTCH - 1.4"X 86.14" - BELMONT MAPLE
6B	M09568-36-YK0	EA	MOLDING - TRIM/VEE - 1.5" X 76.3" - CONCERT CHERRY
6B	M09568-36-YK1	EA	MOLDING - TRIM/VEE - 1.5" X 76.3" - HONEY CHERRY
6B	M09568-36-YK2	EA	MOLDING - TRIM/VEE - 1.5" X 76.3" - BELMONT MAPLE
6B	M09568-36-YK3	EA	MOLDING - TRIM/VEE - 1.5" X 76.3" - WASHED MAPLE
6B	M09553-53-WH6	EA	MOLDING - TRIM/VEE - NOTCHED - 1.5" X 20.6" - SIERRA MAPLE
7B	Y00076-32-438	EA	MOLDING/TRIM - .5" X 1" X 96" - CHERRY (UNSTAINED)
7B	Y00076-22-438	EA	MOLDING/TRIM - .5" X 1" X 96" - MAPLE (UNSTAINED)
8B	M09525-92-T78	EA	MOLDING/TRIM - .5" X 1" X 75.6" - CONCERT CHERRY
8B	M09525-92-T79	EA	MOLDING/TRIM - .5" X 1" X 75.6" - WASHED MAPLE
8B	M09525-92-T80	EA	MOLDING/TRIM - .5" X 1" X 75.6" - SIERRA MAPLE
8B	M09525-92-Y92	EA	MOLDING/TRIM - .5" X 1" X 75.6" - HONEY CHERRY
8B	M09525-92-Y93	EA	MOLDING/TRIM - .5" X 1" X 75.6" - BELMONT MAPLE
8B	Y00086-D2-438	EA	MOLDING - VINYL WRAP - .7" X 1.6" X 96" - CONCERT CHERRY
8B	Y00086-A2-438	EA	MOLDING - VINYL WRAP - .7" X 1.6" X 96" - WASHED MAPLE
8B	Y00086-92-438	EA	MOLDING - VINYL WRAP - .7" X 1.6" X 96" - SIERRA MAPLE
8B	Y00086-82-438	EA	MOLDING - VINYL WRAP - .7" X 1.6" X 96" - HONEY CHERRY
8B	Y00086-E2-438	EA	MOLDING - VINYL WRAP - .7" X 1.6" X 96" - BELMONT MAPLE
8B	Y00087-D2-438	EA	MOLDING - VINYL WRAP - .7” X 2.9” X 96" - CONCERT CHERRY
8B	Y00087-A2-438	EA	MOLDING - VINYL WRAP - .7” X 2.9” X 96" - WASHED MAPLE
8B	Y00087-92-438	EA	MOLDING - VINYL WRAP - .7” X 2.9” X 96" - SIERRA MAPLE
8B	Y00087-82-438	EA	MOLDING - VINYL WRAP - .7” X 2.9” X 96" - HONEY CHERRY
8B	Y00087-E2-438	EA	MOLDING - VINYL WRAP - .7” X 2.9” X 96" - BELMONT MAPLE

COPYRIGHT © 2009 WINNEBAGO INDUSTRIES INC.

INTERIOR FINISH GROUP (CONTINUED)

MOLDINGS & TRIMS (CONTINUED)

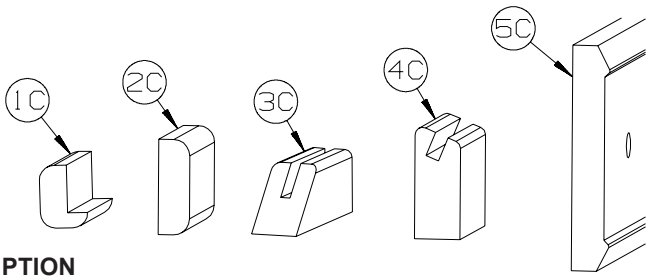

KEY	PART NUMBER	U/M	DESCRIPTION
1C	M09520-19-TD1	EA	MOLDING - TRIM - W/NOTCH - 1" X 86.3" - CONCERT CHERRY
1C	M09520-19-TD2	EA	MOLDING - TRIM - W/NOTCH - 1" X 86.3" - WASHED MAPLE
1C	M09520-19-TD3	EA	MOLDING - TRIM - W/NOTCH - 1" X 86.3" - HONEY CHERRY
1C	M09534-07-YG3	EA	MOLDING - TRIM - W/NOTCH - 1" X 85.7" - BELMONT MAPLE
1C	M09583-98-Y79	EA	MOLDING - HARDWOOD - .75" X 1.4" X 86.6" - SIERRA MAPLE
1C	M09583-98-Y80	EA	MOLDING - HARDWOOD - .75" X 1.4" X 86.6" - CONCERT CHERRY
1C	M09583-98-WH6	EA	MOLDING - HARDWOOD - .75" X 1.4" X 86.6" - BELMONT MAPLE
1C	M09565-68-YL5	EA	MOLDING - HARDWOOD - .75" X 1.4" X 81.9" - HONEY CHERRY
1C	M09565-68-WH5	EA	MOLDING - HARDWOOD - .75" X 1.4" X 81.9" - WASHED MAPLE
2C	M09511-46-T78	EA	MOLDING/TRIM - .5" X 1.5" X 86.5" - CONCERT CHERRY
2C	M09511-46-T79	EA	MOLDING/TRIM - .5" X 1.5" X 86.5" - WASHED MAPLE
2C	M09511-46-T80	EA	MOLDING/TRIM - .5" X 1.5" X 86.5" - SIERRA MAPLE
2C	M09515-13-YG3	EA	MOLDING/TRIM - .5" X 1.5" X 86.06" - BELMONT MAPLE
2C	M09553-82-YR0	EA	MOLDING/TRIM - .5" X 1.5" X 86" - HONEY CHERRY
3C	Y00223-22-438	EA	MOLDING - HARDWOOD/MAPLE - .7" X 1" X 96" - UNSTAINED MAPLE
3C	Y00223-32-438	EA	MOLDING - HARDWOOD/CHERRY - .7" X 1" X 96" - UNSTAINED CHERRY
3C	Y00223-42-438	EA	MOLDING - HARDWOOD/CHERRY - .7" X 1" X 96" - UNSTAINED OAK
4C	Y00054-A2-438	EA	MOLDING - VINYL - W/SLOT - .7"X 1.9"X 96" - WASHED MAPLE
4C	Y00054-D2-438	EA	MOLDING - VINYL - W/SLOT - .7"X 1.9"X 96" - CONCERT CHERRY
4C	Y00054-E2-438	EA	MOLDING - VINYL - W/SLOT - .7"X 1.9"X 96" - BELMONT MAPLE
4C	Y00054-22-438	EA	MOLDING - VINYL - W/SLOT - .7"X 1.9"X 96" - WASHED MAPLE
4C	Y00054-82-438	EA	MOLDING - VINYL - W/SLOT - .7"X 1.9"X 96" - HONEY CHERRY
4C	Y00054-92-438	EA	MOLDING - VINYL - W/SLOT - .7"X 1.9"X 96" - SIERRA MAPLE
4C	Y00276-A2-438	EA	MOLDING - VINYL - W/SLOT - .7"X 1.9"X 96" - WASHED MAPLE
4C	Y00276-D2-438	EA	MOLDING - VINYL - W/SLOT - .7"X 1.9"X 96" - CONCERT CHRRY
4C	Y00276-E2-438	EA	MOLDING - VINYL - W/SLOT - .7"X 1.9"X 96" - BELMONT MAPLE
4C	Y00276-82-438	EA	MOLDING - VINYL - W/SLOT - .7"X 1.9"X 96" - HONEY CHERRY
4C	Y00276-92-438	EA	MOLDING - VINYL - W/SLOT - .7"X 1.9"X 96" - SIERRA MAPLE
5C	Y00152-A2-438	EA	MOLDING/TRIM - VINYL - .6" X 3.5" X 96" - WASHED MAPLE
5C	Y00152-D2-438	EA	MOLDING/TRIM - VINYL - .6" X 3.5" X 96" - CONCERT CHERRY
5C	Y00152-E2-438	EA	MOLDING/TRIM - VINYL - .6" X 3.5" X 96" - BELMONT MAPLE
5C	Y00152-22-438	EA	MOLDING/TRIM - VINYL - .6" X 3.5" X 96" - WASHED MAPLE
5C	Y00152-92-438	EA	MOLDING/TRIM - VINYL - .6" X 3.5" X 96" - SIERRA MAPLE

COPYRIGHT © 2009 WINNEBAGO INDUSTRIES INC.

INTERIOR FINISH GROUP (CONTINUED)

MOLDINGS & TRIMS (CONTINUED)

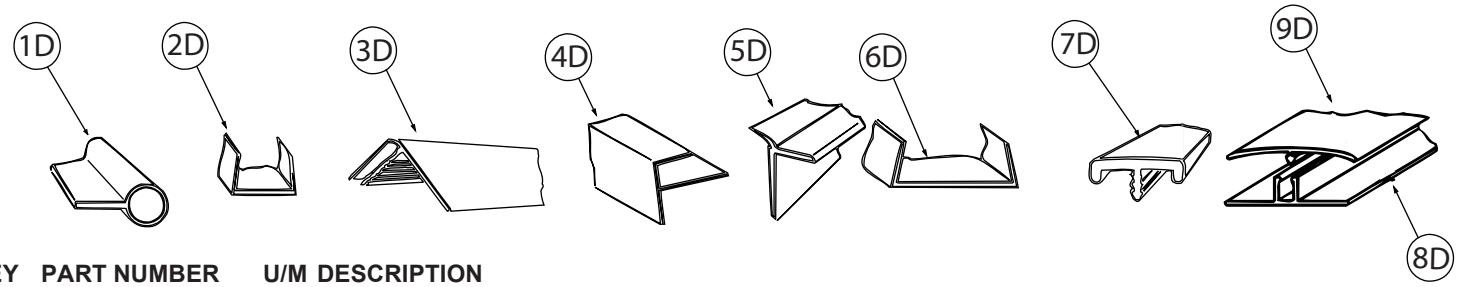

KEY	PART NUMBER	U/M	DESCRIPTION
1D	009767-12-000	FT	WELTING - ANTIQUE WHITE
2D	009778-25-000	FT	U-CHANNEL - 1" - BEIGE ILLUSION
2D	009778-26-000	FT	U-CHANNEL - 1 1/4" - BEIGE ILLUSION
2D	009778-38-000	FT	U-CHANNEL - 1" - BONE
2D	009778-34-000	FT	U-CHANNEL - 1" - CONCERT CHERRY
2D	009778-27-000	FT	U-CHANNEL - 1" - WASHED MAPLE
2D	009778-35-000	FT	U-CHANNEL - 1" - HONEY CHERRY
2D	009778-36-000	FT	U-CHANNEL - 1" - SIERRA MAPLE
2D	009778-39-000	FT	U-CHANNEL - 1" - BELMONT MAPLE
3D	009809-30-000	EA	MOLDING - CORNER - OUTSIDE - 1" X 84" - BEIGE ILLUSION
3D	009809-37-000	EA	MOLDING - CORNER - OUTSIDE - 1" X 84" - BONE
3D	009809-33-000	EA	MOLDING - CORNER - OUTSIDE - 1" X 84" - CONCERT CHERRY
3D	009809-31-000	EA	MOLDING - CORNER - OUTSIDE - 1" X 84" - WASHED MAPLE
3D	009809-35-000	EA	MOLDING - CORNER - OUTSIDE - 1" X 84" - SIERRA MAPLE
4D	009812-31-000	EA	MOLDING - CORNER - 1/2" W/1/4"CHAN X 84" - BEIGE ILLUSION
4D	009812-40-000	EA	MOLDING - CORNER - 1/2" W/1/4"CHAN X 84" - BONE
4D	009812-36-000	EA	MOLDING - CORNER - 1/2" W/1/4"CHAN X 84" - CONCERT CHERRY
4D	009812-33-000	EA	MOLDING - CORNER - 1/2" W/1/4"CHAN X 84" - WASHED MAPLE
4D	009812-37-000	EA	MOLDING - CORNER - 1/2" W/1/4"CHAN X 84" - HONEY CHERRY
4D	009812-38-000	EA	MOLDING - CORNER - 1/2" W/1/4"CHAN X 84" - SIERRA MAPLE
4D	009812-41-000	EA	MOLDING - CORNER - 1/2" W/1/4"CHAN X 84" - BELMONT MAPLE
5D	168943-01-01A	FT	MOLDING - REVERSE COVE - T-SHAPED - BRIGHT WHITE
5D	168943-01-02A	FT	MOLDING - REVERSE COVE - T-SHAPED - BONE
6D	070504-42-000	FT	U-CHANNEL - PLASTIC - .13" X 84" - BEIGE ILLUSION
6D	070504-69-000	FT	U-CHANNEL - PLASTIC - .13" X 84" - BONE
6D	070504-43-000	FT	U-CHANNEL - PLASTIC - .9" X 96" - BEIGE ILLUSION
6D	070504-70-000	FT	U-CHANNEL - PLASTIC - .8" X 84" - BONE
6D	070504-60-000	FT	U-CHANNEL - PLASTIC - .13" X 84" - CONCERT CHERRY
6D	070504-61-000	FT	U-CHANNEL - PLASTIC - .9" X 84" - CONCERT CHERRY
6D	070504-50-000	FT	U-CHANNEL - PLASTIC - .13" X 96" - WASHED MAPLE
6D	070504-51-000	FT	U-CHANNEL - PLASTIC - .9" X 96" - WASHED MAPLE
6D	070504-62-000	FT	U-CHANNEL - PLASTIC - 1.65" X 84" - HONEY CHERRY
6D	070504-63-000	FT	U-CHANNEL - PLASTIC - .9" X 84" - HONEY CHERRY
6D	070504-65-000	FT	U-CHANNEL - PLASTIC - .07" X 96" - SIERRA MAPLE
6D	070504-66-000	FT	U-CHANNEL - PLASTIC - .8" X 84" - SIERRA MAPLE
7D	083620-25-000	FT	MOLDING-T - W/EDGE LIP - 7/8" FACE - BONE
7D	083620-19-000	FT	MOLDING-T - W/EDGE LIP - 7/8" FACE - WASHED MAPLE
7D	083620-24-000	FT	MOLDING-T - W/EDGE LIP - 7/8" FACE - HONEY CHERRY
7D	083620-22-000	FT	MOLDING-T - W/EDGE LIP - 7/8" FACE - SIERRA MAPLE
8D	086229-01-000	EA	RETAINER - BATTEN - .75" X 92.1" - ANY COLOR
9D	086229-12-000	EA	BATTEN - 1.5" OFFSET X 96.8" - MODERN IVORY
9D	086229-20-000	EA	BATTEN - 1" X 96" - BEIGE

COPYRIGHT © 2009 WINNEBAGO INDUSTRIES INC.

INTERIOR FINISH GROUP (CONTINUED)

MOLDINGS & TRIMS (CONTINUED)

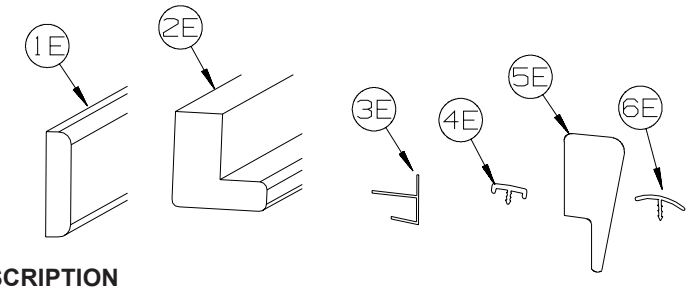

KEY	PART NUMBER	U/M	DESCRIPTION
1E	100818-01-23A	EA	MOLDING - VINYL WRPPD - 1.6" X .4" X 84" - CONCERT CHERRY
1E	100818-01-21A	EA	MOLDING - VINYL WRAPPED - 1.6" X .4" X 84" - WASHED MAPLE
1E	100818-01-14A	EA	MOLDING - VINYL WRAPPED - 1.6" X .4" X 84" - HONEY CHERRY
1E	100818-01-22A	EA	MOLDING - VINYL WRAPPED - 1.6" X .4" X 84" - SIERRA MAPLE
2E	100819-01-23A	EA	MOLDING - VYL WRPPD-L-SHPD-1.5"X1.5"X84" - CONCERT CHERRY
2E	100819-01-21A	EA	MOLDING - VINYL WRAPPED-L-SHAPED-1.5"X1.5"X84" - WASHED MAPLE
2E	100819-01-14A	EA	MOLDING - VINYL WRAPPED-L-SHAPED-1.5"X1.5"X84" - HONEY CHERRY
2E	100819-01-22A	EA	MOLDING - VINYL WRAPPED-L-SHAPED-1.5"X1.5"X84" - SIERRA MAPLE
3E	103186-01-07A	FT	MOLDING/PLASTIC - 3/8" U-CHANNEL-3/4" FACE - BEIGE ILLUSION
3E	103186-01-10A	FT	MOLDING/PLASTIC - 3/8" U-CHANNEL-3/4" FACE - CONCERT CHERRY
3E	103186-01-08A	FT	MOLDING/PLASTIC - 3/8" U-CHANNEL-3/4" FACE- 8' - WASHED MAPLE
3E	103186-01-11A	FT	MOLDING/PLASTIC - 3/8" U-CHANNEL-3/4" FACE - HONEY CHERRY
3E	103186-01-12A	FT	MOLDING/PLASTIC - 3/8" U-CHANNEL-3/4" FACE - SIERRA MAPLE
3E	103186-01-14A	FT	MOLDING/PLASTIC - 3/8" U-CHANNEL-3/4" FACE - BELMONT MAPLE
3E	103186-02-07A	FT	MOLDING/PLASTIC-1" U-CHANNEL-1 3/8" FACE - BEIGE ILLUSION
3E	103186-02-10A	FT	MOLDING/PLASTIC - 1" U-CHANNEL-1 3/8" FACE - CONCERT CHERRY
3E	103186-02-08A	FT	MOLDING/PLASTIC - 1" U-CHANNEL-1 3/8" FACE - WASHED MAPLE
3E	103186-02-11A	FT	MOLDING/PLASTIC - 1" U-CHANNEL-1 3/8" FACE - HONEY CHERRY
3E	103186-02-12A	FT	MOLDING/PLASTIC - 1" U-CHANNEL-1 3/8" FACE - SIERRA MAPLE
4E	104676-02-14A	FT	MOLDING-T - W/EDGE LIP - 11/16" FACE - BELMONT MAPLE
5E	105004-01-21A	EA	MOLDING - VINYL WRAP - 1" X 96" - WASHED MAPLE
5E	105004-01-24A	EA	MOLDING - VINYL WRAP - 1" X 96" - HONEY CHERRY
5E	105004-01-22A	EA	MOLDING - VINYL WRAP - 1" X 96" - SIERRA MAPLE
6E	105709-02-000	FT	MOLDING-T - 1" FACE - 5/16" BARB - BEIGE ILLUSION

COPYRIGHT © 2009 WINNEBAGO INDUSTRIES INC.

INTERIOR FINISH GROUP (CONTINUED)

MOLDINGS & TRIMS (CONTINUED)

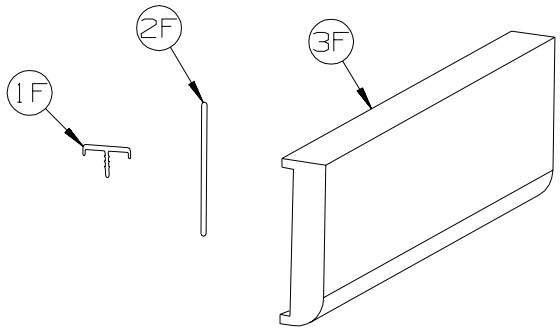

KEY	PART NUMBER	U/M	DESCRIPTION
1F	119520-01-01A	FT	MOLDING-T - OFFSET W/EDGE LIP - 1.3" FACE - OFF WHITE
1F	119520-03-02A	FT	MOLDING-T - OFFSET W/EDGE LIP - 1" FACE - CONCERT CHERRY
1F	119520-03-03A	FT	MOLDING-T - OFFSET W/EDGE LIP - 1" FACE - WASHED MAPLE
1F	119520-03-05A	FT	MOLDING-T - OFFSET W/EDGE LIP - 1" FACE - SIERRA MAPLE
1F	119520-03-06A	FT	MOLDING-T - OFFSET W/EDGE LIP - 1" FACE - HONEY CHERRY
1F	119520-03-07A	FT	MOLDING-T - OFFSET W/EDGE LIP - 1" FACE - BELMONT MAPLE
2F	127842-01-01A	FT	SEAL - SIGHT SHIELD - 2" BLACK
	160300-A2-438	EA	LUMBER - VINYL WRAPPED - .7" X .75" X 96" - CONCERT CHERRY
	160300-D2-438	EA	LUMBER - VINYL WRAPPED - .7" X 1.5" X 96" - CONCERT CHERRY
	160300-E2-438	EA	LUMBER - VINYL WRAPPED - .7" X 2" X 96" - CONCERT CHERRY
	160300-F2-438	EA	LUMBER - VINYL WRAPPED - .7" X 2.5" X 96" - CONCERT CHERRY
	160300-G2-438	EA	LUMBER - VINYL WRAPPED - .7" X 3" X 96" - CONCERT CHERRY
	160300-H2-438	EA	LUMBER - VINYL WRAPPED - .7" X 3.5" X 96" - CONCERT CHERRY
	160300-J2-438	EA	LUMBER - VINYL WRAPPED - .7" X 5.5" X 96" - CONCERT CHERRY
	160300-K2-438	EA	LUMBER - VINYL WRAPPED - .7" X 3.9" X 96" - CONCERT CHERRY
	160300-R2-438	EA	LUMBER - VINYL WRAPPED - .7" X 3" X 96" - CONCERT CHERRY
3F	160301-D2-134	EA	MOLDING - VINYL WRAPPED - .7" X 1.6" X 84" - CONCERT CHERRY
3F	160301-D2-743	EA	MOLDING - VINYL WRAPPED - .7" X 1.6" X 108" - CONCERT CHERRY
3F	160301-F2-134	EA	MOLDING - VINYL WRAPPED - .7" X 2.5" X 84" - CONCERT CHERRY
3F	160301-F2-743	EA	MOLDING - VINYL WRPPD - .7" X 2.5" X 108" - CONCERT CHERRY
3F	160301-F2-438	EA	MOLDING - VINYL WRPPD - .7" X 2.5" X 96" - CONCERT CHERRY
	146419-A2-438	EA	LUMBER - VINYL WRAPPED - .7" X .75" X 96" - HONEY CHERRY
	146419-D2-438	EA	LUMBER - VINYL WRAPPED - .7" X 1.5" X 96" - HONEY CHERRY
	146419-E2-438	EA	LUMBER - VINYL WRAPPED - .7" X 2" X 96" - HONEY CHERRY
	146419-F2-438	EA	LUMBER - VINYL WRAPPED - .7" X 2.5" X 96" - HONEY CHERRY
	146419-G2-438	EA	LUMBER - VINYL WRAPPED - .7" X 3" X 96" - HONEY CHERRY
	146419-H2-438	EA	LUMBER - VINYL WRAPPED - .7" X 3.5" X 96" - HONEY CHERRY
	146419-J2-438	EA	LUMBER - VINYL WRAPPED - .7" X 5.5" X 96" - HONEY CHERRY
	146419-J2-743	EA	LUMBER - VINYL WRAPPED - .7" X 5.5" X 108" - HONEY CHERRY
	146419-K2-438	EA	LUMBER - VINYL WRAPPED - .7" X 3.9" X 96" - HONEY CHERRY

COPYRIGHT © 2009 WINNEBAGO INDUSTRIES INC.

INTERIOR FINISH GROUP (CONTINUED)

MOLDINGS & TRIMS (CONTINUED)

KEY	PART NUMBER	U/M	DESCRIPTION
	146419-R2-438	EA	LUMBER - VINYL WRAPPED - .7" X 3" X 96" - HONEY CHERRY
	146419-S2-438	EA	LUMBER - VINYL WRAPPED/FULL - .7"X 3.5"X 96" - HONEY CHERRY
	146419-T2-438	EA	LUMBER - VINYL WRAPPED/FULL - .7"X 5.5"X 96" - HONEY CHERRY
3F	146425-D2-134	EA	MOLDING - VINYL WRAPPED - .7" X 1.6" X 83.9" - HONEY CHERRY
3F	146425-F2-438	EA	MOLDING - VINYL WRAPPED - .7" X 2.6" X 96" - HONEY CHERRY
	149325-A2-438	EA	LUMBER - VINYL WRAPPED - .7" X .75" X 96" - WASHED MAPLE
	149325-D2-438	EA	LUMBER - VINYL WRAPPED - .7" X 1.5" X 96" - WASHED MAPLE
	149325-E2-438	EA	LUMBER - VINYL WRAPPED - .7" X 2" X 96" - WASHED MAPLE
	149325-F2-438	EA	LUMBER - VINYL WRAPPED - .7" X 2.5" X 96" - WASHED MAPLE
	149325-G2-438	EA	LUMBER - VINYL WRAPPED - .7" X 3" X 96" - WASHED MAPLE
	149325-H2-438	EA	LUMBER - VINYL WRAPPED - .7" X 3.5" X 96" - WASHED MAPLE
	149325-J2-438	EA	LUMBER - VINYL WRAPPED - .7" X 5.5" X 96" - WASHED MAPLE
	149325-J2-743	EA	LUMBER - VINYL WRAPPED - .7" X 5.5" X 108" - WASHED MAPLE
	149325-K2-438	EA	LUMBER - VINYL WRAPPED - .7" X 3.9" X 96" - WASHED MAPLE
	149325-R2-438	EA	LUMBER - VINYL WRAPPED - .7" X 3" X 96" - WASHED MAPLE
3F	149326-D2-134	EA	MOLDING - VINYL WRAPPED - .7" X 1.5" X 83.9" - WASHED MAPLE
3F	149326-D2-743	EA	MOLDING - VINYL WRAPPED - .7" X 1.5" X 108" - WASHED MAPLE
3F	149326-F2-134	EA	MOLDING - VINYL WRAPPED - .7" X 2.5" X 83.9" - WASHED MAPLE
3F	149326-F2-438	EA	MOLDING - VINYL WRAPPED - .7" X 2.5" X 96" - WASHED MAPLE
3F	149326-F2-743	EA	MOLDING - VINYL WRAPPED - .7" X 2.5" X 108" - WASHED MAPLE
	149330-A2-438	EA	LUMBER - VINYL WRAPPED - .7" X .75" X 96" - SIERRA MAPLE
	149330-D2-438	EA	LUMBER - VINYL WRAPPED - .7" X 1.5" X 96" - SIERRA MAPLE
	149330-E2-438	EA	LUMBER - VINYL WRAPPED - .7" X 2" X 96" - SIERRA MAPLE
	149330-F2-438	EA	LUMBER - VINYL WRAPPED - .7" X 2.5" X 96" - SIERRA MAPLE
	149330-G2-438	EA	LUMBER - VINYL WRAPPED - .7" X 3" X 96" - SIERRA MAPLE
	149330-H2-438	EA	LUMBER - VINYL WRAPPED - .7" X 3.5" X 96" - SIERRA MAPLE
	149330-J2-438	EA	LUMBER - VINYL WRAPPED - .7" X 5.5" X 96" - SIERRA MAPLE
	149330-J2-743	EA	LUMBER - VINYL WRAPPED - .7" X 5.5" X 108" - SIERRA MAPLE
	149330-K2-438	EA	LUMBER - VINYL WRAPPED - .7" X 3.9" X 96" - SIERRA MAPLE
	149330-R2-438	EA	LUMBER - VINYL WRAPPED - .7" X 3" X 96" - SIERRA MAPLE
3F	166208-D2-134	EA	MOLDING - VINYL WRAP - .7" X 1.5" X 84" - BELMONT MAPLE
3F	166208-D2-743	EA	MOLDING - VINYL WRAP - .7" X 1.5" X 108" - BELMONT MAPLE
3F	166208-F2-134	EA	MOLDING - VINYL WRAP - .7" X 2.5" X 84" - BELMONT MAPLE
3F	166208-F2-438	EA	MOLDING - VINYL WRAP - .7" X 2.5" X 96" - BELMONT MAPLE
3F	166208-F2-743	EA	MOLDING - VINYL WRAP - .7" X 2.5" X 108" - BELMONT MAPLE
	166206-A2-438	EA	LUMBER - VINYL WRAPPED - .7" X .75" X 96" - BELMONT MAPLE
	166206-D2-438	EA	LUMBER - VINYL WRAPPED - .7" X 1.5" X 96" - BELMONT MAPLE
	166206-E2-438	EA	LUMBER - VINYL WRAPPED - .7" X 2" X 96" - BELMONT MAPLE
	166206-F2-438	EA	LUMBER - VINYL WRAPPED - .7" X 2.5" X 96" - BELMONT MAPLE
	166206-G2-438	EA	LUMBER - VINYL WRAPPED - .7" X 3" X 96" - BELMONT MAPLE
	166206-H2-438	EA	LUMBER - VINYL WRAPPED - .7" X 3.5" X 96" - BELMONT MAPLE
	166206-J2-438	EA	LUMBER - VINYL WRAPPED - .7" X 5.5" X 96" - BELMONT MAPLE
	166206-K2-438	EA	LUMBER - VINYL WRAPPED - .7" X 3.9" X 96" - BELMONT MAPLE
	166206-R2-438	EA	LUMBER - VINYL WRAPPED - .7" X 3" X 96" - BELMONT MAPLE

COPYRIGHT © 2009 WINNEBAGO INDUSTRIES INC.

INTERIOR FINISH GROUP (CONTINUED)

MOLDINGS & TRIMS (CONTINUED)

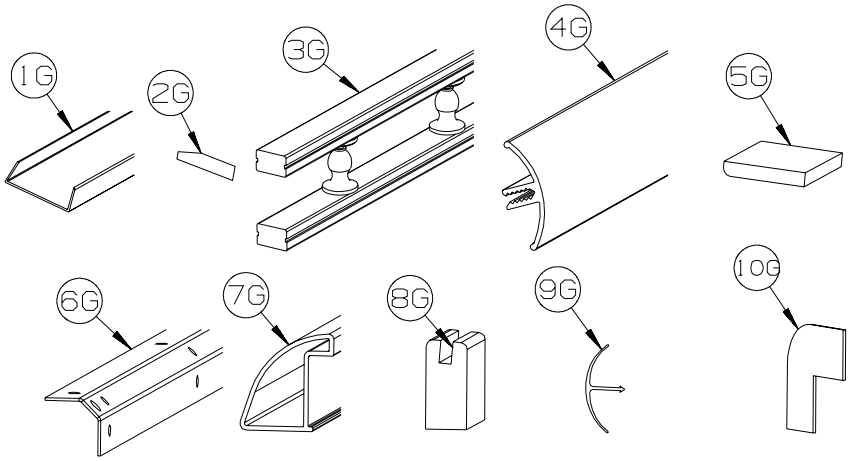

KEY	PART NUMBER	U/M	DESCRIPTION
1G	141260-01-01A	FT	U-CHANNEL - 1" - VILLAGE OAK
1G	141260-01-02A	FT	U-CHANNEL - 1" - GRADY BROWN
2G	146306-01-01A	FT	TRANSITION - CARPET/TILE
3G	150167-01-03A	EA	RAIL - DECORATIVE - 96" - WASHED MAPLE
3G	150167-01-08A	EA	RAIL - DECORATIVE - 96" - HONEY CHERRY
3G	150167-01-09A	EA	RAIL - DECORATIVE - 96" - SIERRA MAPLE
3G	150167-01-10A	EA	RAIL - DECORATIVE - 96" - BELMONT MAPLE
4G	151653-10-02A	EA	TRIM/RADIUS - CABINET CORNER - 79.6" - DULL METALLIC
4G	151653-13-02A	EA	TRIM/RADIUS - CABINET CORNER - 79.8" - DULL METALLIC
5G	M09568-04-Y91	EA	MOLDING/TRIM - .3" X 1.5" X 73.6" - CONCERT CHERRY
5G	M09568-04-W80	EA	MOLDING/TRIM - .3" X 1.5" X 73.6" - SIERRA MAPLE
5G	M09568-04-W79	EA	MOLDING/TRIM - .3" X 1.5" X 73.6" - WASHED MAPLE
6G	151861-01-02B	EA	ANGLE - SUPPORT/CORNER - 1.4" X 12.5" - E-COATED
6G	151861-02-02B	EA	ANGLE - SUPPORT/CORNER - 1.4" X 20.1" - E-COATED
6G	151861-03-02B	EA	ANGLE - SUPPORT/CORNER - 1.4" X 26.7" - E-COATED
6G	151861-04-02B	EA	ANGLE - SUPPORT/CORNER - 1.4" X 32.7" - E-COATED
6G	151861-05-02B	EA	ANGLE - SUPPORT/CORNER - 1.4" X 78.6" - E-COATED
6G	151861-06-02B	EA	ANGLE - SUPPORT/CORNER - 1.4" X 59" - E-COATED
6G	151861-08-02B	EA	ANGLE - SUPPORT/CORNER - 1.4" X 22.2" - E-COATED
6G	151861-09-02B	EA	ANGLE - SUPPORT/CORNER - 1.4" X 14.9" - E-COATED
7G	151893-01-02A	EA	TRIM/RADIUS - CABINET BOTTOM - 72.6" - DULL METALLIC
8G	Y00419-D2-438	EA	MOLDING - VINYL/BEVELED W/SLOT - 1.6"X 96" - CONCERT CHERRY
8G	Y00419-E2-438	EA	MOLDING - VINYL/BEVELED W/SLOT - 1.6"X 96" - BELMONT MAPLE
8G	Y00419-92-438	EA	MOLDING - VINYL/BEVELED W/SLOT - 1.6"X 96" - SIERRA MAPLE
9G	156464-01-01A	FT	MOLDING - CORNER - RADIUS/PLASTIC - 8' - HONEY CHERRY
9G	156464-01-02A	FT	MOLDING - CORNER - RADIUS/PLASTIC - 8' - WASHED MAPLE
9G	156464-01-04A	FT	MOLDING - CORNER - RADIUS/PLASTIC - 8' - BELMONT MAPLE
9G	156464-01-05A	FT	MOLDING - CORNER - RADIUS/PLASTIC - 8' - SIERRA MAPLE
9G	156464-01-06A	FT	MOLDING - CORNER - RADIUS/PLASTIC - 8' - CONCERT CHERRY
9G	156464-03-03A	FT	MOLDING - CORNER - RADIUS/PLASTIC - 8' - BONE
	081521-02-007	EA	MOUNT - METAL MOLDING - F/RADIUS CORNER MOLDING - 151.5"
10G	160989-01-06A	FT	CAP - CORNER - RADIUS MOLDING - PLASTIC - WASHED MAPLE
10G	160989-01-07A	FT	CAP - CORNER - RADIUS MOLDING - PLASTIC - HONEY CHERRY
10G	160989-01-10A	FT	CAP - CORNER - RADIUS MOLDING - PLASTIC - BELMONT MAPLE

COPYRIGHT © 2009 WINNEBAGO INDUSTRIES INC.

INTERIOR FINISH GROUP (CONTINUED)

PANELING & LAMINATES

KEY	PART NUMBER	U/M	DESCRIPTION
	000885-A7-000	SF	PARTICLE BOARD - 3/4" X 4' X 8' - 2 SIDED - HONEY CHERRY
	000885-A8-000	SF	PARTICLE BOARD - 3/8" X 4' X 8' - 1 SIDED - HONEY CHERRY
	000885-A9-000	SF	PARTICLE BOARD - 3/8" X 4' X 8' - 2 SIDED - HONEY CHERRY
	000885-C4-000	SF	PARTICLE BOARD - 3/8" X 4' X 8' - 1 SIDED - BELMONT MAPLE
	000885-C5-000	SF	PARTICLE BOARD - 3/4" X 4' X 8' - 2 SIDED - BELMONT MAPLE
	000885-C6-000	SF	PARTICLE BOARD - 3/8" X 4' X 8' - 2 SIDED - BELMONT MAPLE
	000885-C3-000	SF	PARTICLE BOARD - 3/8" X 4' X 8' - 1 SIDED - WHT THATCH EMB
	057882-06-000	SF	TAMBOUR - 48" X 96" SHEET - UNFINISHED - HONEY CHERRY
	057882-05-000	SF	TAMBOUR - 48" X 96" SHEET - UNFINISHED - BELMONT MAPLE
	074497-47-000	SF	PANELING - HONEY CHERRY - 1/8" X 4' X 8'
	074497-53-000	SF	PANELING - BELMONT MAPLE - 1/8" X 4' X 8
	088272-M9-000	SF	PANELING - WHITE THATCHED - 4' X 8'
	074498-B6-000	SF	LAMINATE - PLASTIC - SATIN OXIDE - 4' X 8'
	085284-M1-000	FT	BATT TAPE - ADHESIVE BACKED - DECORATIVE - SANIBEL/MARBLE (Y37, Y38)
	085284-M4-000	FT	BATT TAPE - ADHESIVE BACKED - DECORATIVE - SAND (Y41, Y42)
	085284-L9-000	FT	BATT TAPE - ADHESIVE BACKED - DECORATIVE - FAUX (Y39, Y40)
	088272-P2-000	SF	PANELING - SANIBEL/MARBLE - 4' X 7.4' (Y37, Y38)
	088272-P0-000	SF	PANELING - FAUX - 4' X 7.4' (Y39, Y40)
	088272-P5-000	SF	PANELING - SAND - 4' X 7.4' (Y41, Y42)

COPYRIGHT © 2009 WINNEBAGO INDUSTRIES INC.

INTERIOR FINISH GROUP (CONTINUED)

INTERIOR TRIM LAYOUT

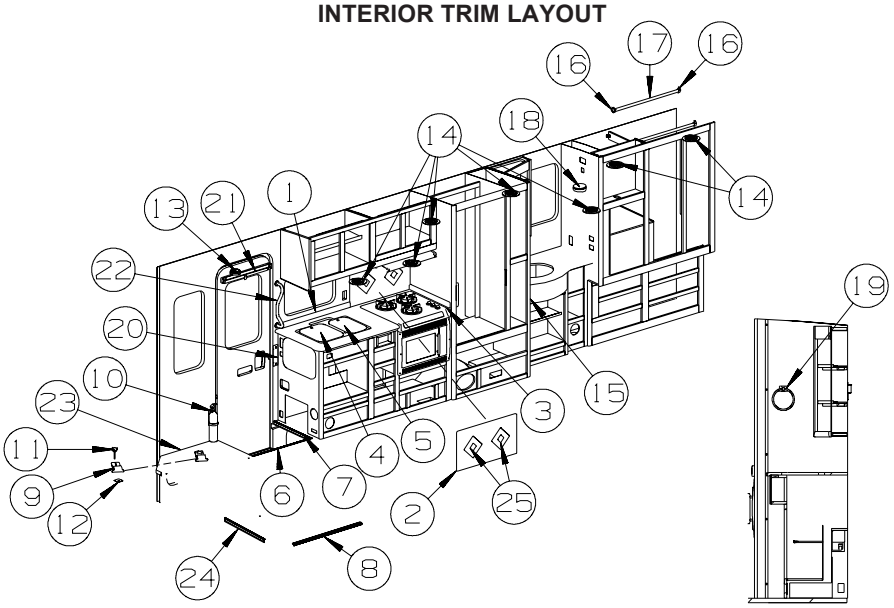

KEY	PART NUMBER	U/M	DESCRIPTION
1	165087-06-06A	EA	BACKSPLASH - COUNTERTOP (Y37, Y38) - 086
1	165087-06-04A	EA	BACKSPLASH - COUNTERTOP (Y39, Y40) - 086
1	165087-06-05A	EA	BACKSPLASH - COUNTERTOP (Y41, Y42) - 086
2	166866-01-Y37	EA	BACKSPLASH - STOVE (Y37, Y38) - 086
2	166866-01-Y39	EA	BACKSPLASH - STOVE (Y39, Y40) - 086
2	166866-01-Y49	EA	BACKSPLASH - STOVE (Y41, Y42) - 086
3	165087-07-06A	EA	BACKSPLASH - COUNTERTOP (Y37, Y38) - 086
3	165087-07-04A	EA	BACKSPLASH - COUNTERTOP (Y39, Y40) - 086
3	165087-07-05A	EA	BACKSPLASH - COUNTERTOP (Y41, Y42) - 086
4	162616-05-01A	EA	COVER/SINK - LARGE - PEARL GRAY - 086
5	162616-06-01A	EA	COVER/SINK - SMALL - PEARL GRAY - 086
6	139955-02-01A	EA	TRIM - STEP/ENTRY - 27.7" - MILL
7	139955-05-01A	EA	TRIM - STEP/ENTRY - 20.9" - MILL
			FROM: 00-00-00 THRU: 10-05-08
7	139955-16-01A	EA	TRIM - STEP/ENTRY - 21.7" - MILL
			FROM: 10-06-08 THRU: 99-99-99
8	139955-06-02A	EA	TRIM - STEP/ENTRY - 29.3" - TITANIUM - 513
9	143956-03-04B	EA	BRACKET/TIEDOWN - EURO CHAIR - BLACK
10	094499-06-000	EA	EXTINGUISHER/FIRE - DRY - 10BC - W/BRACKET - UL/ULC - WHT
11	134194-01-01A	EA	KNOB - HOLD DOWN/RECLINER - BLACK
12	134128-02-02B	EA	PLATE - W/HOLES - W/WELDNUT - E-COATED
13	072852-01-000	EA	DETECTOR - SMOKE - W/9 VOLT BATTERY - US
13	072852-02-000	EA	DETECTOR - SMOKE - W/9 VOLT BATTERY - 265
14	120134-01-02A	EA	REGISTER - W/DAMPER - 4" PIPE/6.4" O.D. FACE - WHITE
15*	131595-13-01A	EA	DOOR/FOLDING - 37" X 71" - 4 CEILING BRKTS/STRAIGHT TRACK
	131595-16-01A	EA	TRACK - DOOR - CURVED - 32.3"
16	152301-01-01A	EA	FLANGE - PLASTIC - 1" CLOTHES ROD HOLDER - WHITE
17	Y00136-21-218	EA	DOWEL - WOOD - CLOTHES ROD - 1"DIAMETER X 4'
18	125136-02-000	EA	DETECTOR/CO - GAS MODEL - 9 VOLT
19	163601-01-01A	EA	TOWEL RING - CHROME
20	152933-01-01A	EA	COVER - BRACKET - STRIKE - BRIGHT WHITE
20	152933-01-02A	EA	COVER - BRACKET - STRIKE - BLACK
21	144628-03-01A	EA	SHADE - SCREEN DOOR - 20.3" X 33.4" - BRIGHT WHITE/TAUPE
21	144628-03-02A	EA	SHADE - SCREEN DOOR - 20.3" X 33.4" - BLACK
22	137605-03-01A	EA	HAND RAIL - INTERIOR ENTRY DOOR - BLACK
23	M09471-79-RE0	EA	MOLDING - TRIM/COVE - .8" X .8" X 96" - HONEY CHERRY
23	M09471-79-YG3	EA	MOLDING - TRIM/COVE - .8" X .8" X 96" - BELMONT MAPLE
24	139955-32-02A	EA	TRIM - FRONT - 64.5" - TITANIUM - 513
25	160645-02-01A	EA	BACKSPLASH - ACCENT 6" X 6"

***COMPONENT PARTS LISTED LATER IN THIS GROUP**

COPYRIGHT © 2009 WINNEBAGO INDUSTRIES INC.

INTERIOR FINISH GROUP (CONTINUED)

INTERIOR TRIM LAYOUT (CONTINUED)

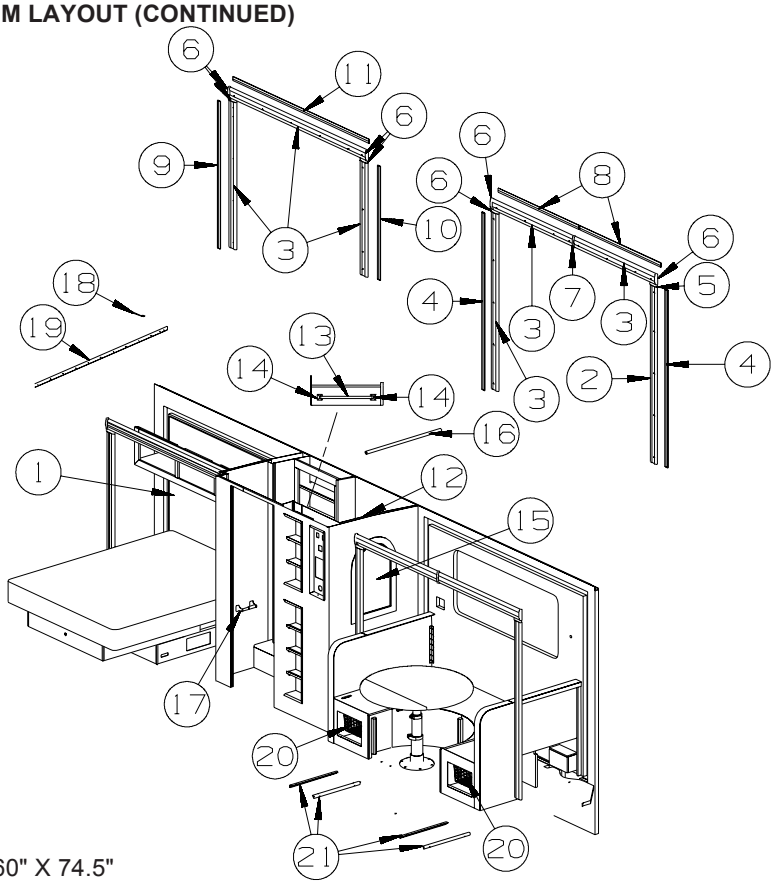

KEY	PART NUMBER	U/M	DESCRIPTION
1	154430-01-000	EA	MATTRESS - INNERSPRING - 60" X 74.5"
1	166796-03-000	EA	MATTRESS - MEMORY FOAM - 60" X 75" - RADIUS CORNERS - 49F
2	Y00413-82-438	EA	MOLDING - VINYL/CURVED - 3.5" X 96" - HONEY CHERRY
2	Y00413-E2-438	EA	MOLDING - VINYL/CURVED - 3.5" X 96" - BELMONT MAPLE
3	Y00410-82-438	EA	MOLDING - SLIDEOUT/VINYL WRAP - 3.9"X 96" - HONEY CHERRY
3	Y00410-E2-438	EA	MOLDING - SLIDEOUT/VINYL WRAP - 3.9"X 96" - BELMONT MAPLE
4	M09577-06-Y37	EA	MOLDING - TRIM/VEE - .3" X 1.6" X 66.5 - HONEY CHERRY
4	M09577-06-Y38	EA	MOLDING - TRIM/VEE - .3" X 1.6" X 66.5" - BELMONT MAPLE
5	156636-12-W66	EA	MOLDING/BLOCK - .9" X 3.7" - HONEY CHERRY
5	156636-12-Y38	EA	MOLDING/BLOCK - .9" X 3.7" - BELMONT MAPLE
6	156636-05-U21	EA	MOLDING/BLOCK - .8" X 4.1" - HONEY CHERRY
6	156636-05-Y38	EA	MOLDING/BLOCK - .8" X 4.1" - BELMONT MAPLE
7	156636-06-U21	EA	MOLDING/BLOCK - .8" X 4.3" - HONEY CHERRY
7	156636-06-Y38	EA	MOLDING/BLOCK - .8" X 4.3" - BELMONT MAPLE
8	M09583-23-Y37	EA	MOLDING - TRIM/VEE - .3" X 1.6" X 44.7" - HONEY CHERRY
8	M09583-23-Y38	EA	MOLDING - TRIM/VEE - .3" X 1.6" X 44.7" - BELMONT MAPLE
9	M09577-08-Y37	EA	MOLDING - TRIM/VEE - .3" X 1.6" X 55.3" - HONEY CHERRY
9	M09577-08-Y38	EA	MOLDING - TRIM/VEE - .3" X 1.6" X 55.3" - BELMONT MAPLE
10	M09577-10-Y37	EA	MOLDING - TRIM/VEE - .3" X 1.6" X 42.8" - HONEY CHERRY FROM: 00-00-00 THRU: 09-14-08
10	M09598-85-Y37	EA	MOLDING - TRIM/VEE - .3" X 1.6" X 42.4" - HONEY CHERRY FROM: 09-15-08 THRU: 99-99-99
10	M09577-10-Y38	EA	MOLDING - TRIM/VEE - .3" X 1.6" X 42.8" - BELMONT MAPLE FROM: 00-00-00 THRU: 09-14-08
10	M09598-85-Y37	EA	MOLDING - TRIM/VEE - .3" X 1.6" X 42.4" - BELMONT MAPLE FROM: 09-15-08 THRU: 99-99-99
11	M09577-09-Y37	EA	MOLDING - TRIM/VEE - .3" X 1.6" X 75" - HONEY CHERRY
11	M09577-09-Y38	EA	MOLDING - TRIM/VEE - .3" X 1.6" X 75" - BELMONT MAPLE
12	151578-01-02A	EA	DOOR - SHOWER - 36.3" X 61.9" - WHT OPAQUE SCREEN/WHITE
13	163599-01-01A	EA	TOWEL BAR - 18" - W/O POSTS - CHROME
14	163599-02-01A	EA	POST - TOWEL BAR - CHROME
15	131494-05-01A	EA	MIRROR - ARCHED TOP - 20" X 30" - 086
16	102075-16-02A	EA	ROD - SHOWER CURTAIN - 3/4"OD X 34.2" - SOFT WHITE FROM: 00-00-00 THRU: 06-12-08
16	102075-06-02A	EA	ROD - SHOWER CURTAIN - 1" OD X 33.5" - SOFT WHITE FROM: 06-13-08 THRU: 99-99-99

COPYRIGHT © 2009 WINNEBAGO INDUSTRIES INC.

INTERIOR FINISH GROUP (CONTINUED)

INTERIOR TRIM LAYOUT (CONTINUED)

KEY	PART NUMBER	U/M	DESCRIPTION
17	163602-01-01A	EA	HOLDER - TOILET TISSUE - SURFACE MOUNT - CHROME
18	138359-01-01A	FT	COVER - ROOF BREAK - PEARL CREAM/PLASTIC - 96"
19	138403-07-01A	EA	TRIM - ROOF - MILL
20	149728-01-01A	EA	BASKET/DRAWER - WHITE - 12.9"W X 20.7"D X 7.3"H
21	149728-02-01A	EA	RUNNER/RAIL - F/BASKET - 21"DEEP
	113236-01-01A	EA	BRACKET - CLOTHES - ROD

FROM: 00-00-00 THRU: 06-12-08

COPYRIGHT © 2009 WINNEBAGO INDUSTRIES INC.

INTERIOR FINISH GROUP (CONTINUED)

COMPONENT PARTS FOR INTERIOR TRIM LAYOUT

131595-01-01A, 131595-05-01A, 131595-10-01A, 131595-13-01A

KEY	PART NUMBER	U/M	DESCRIPTION	VENDOR NO.
	117431-01-707	EA	BALL CATCH - PLASTIC	
	131595-01-700	EA	END STOP ONLY	
	131595-01-701	EA	BRACKET/MOUNTING	908956
	131595-01-702	EA	TRACK/STRAIGHT - 37"	

COPYRIGHT © 2009 WINNEBAGO INDUSTRIES INC.

INTERIOR FINISH GROUP (CONTINUED)
FLOOR COVERINGS

KEY	PART NUMBER	U/M	DESCRIPTION
	042720-41-000	SY	VINYL - FLOOR COVERING - BRIDGEWAY/#69305
	075233-01-000	SY	PAD - CARPET - 3/8" X 6'W ROLL - SOLD BY THE SQUARE YARD
	093486-01-000	SY	CARPET - COMPARTMENT - 72" WIDE - DARK GRAY
	152251-05-02A	SY	CARPET - 4 SQUARE YARD INCREMENTS - BURLWOOD (Y37, Y38, Y39, Y40)
	152251-05-10A	SY	CARPET - 4 SQUARE YARD INCREMENTS - SISAL (Y41, Y42)
	089275-02-000	FT	STRIP - 3/4" X 84" BLACK POLYETHYLENE
	156855-01-06A	YD	CARPET BINDING - TAPE (Y37, Y38, Y39, Y40)
	156855-01-02A	YD	CARPET BINDING - TAPE (Y41, Y42) FROM: 00-00-00 THRU: 01-25-08
	156855-01-03A	YD	CARPET BINDING - TAPE (Y41, Y42) FROM: 01-26-08 THRU: 99-99-99

COPYRIGHT © 2009 WINNEBAGO INDUSTRIES INC.

INTERIOR FINISH GROUP (CONTINUED)

HARDWARE

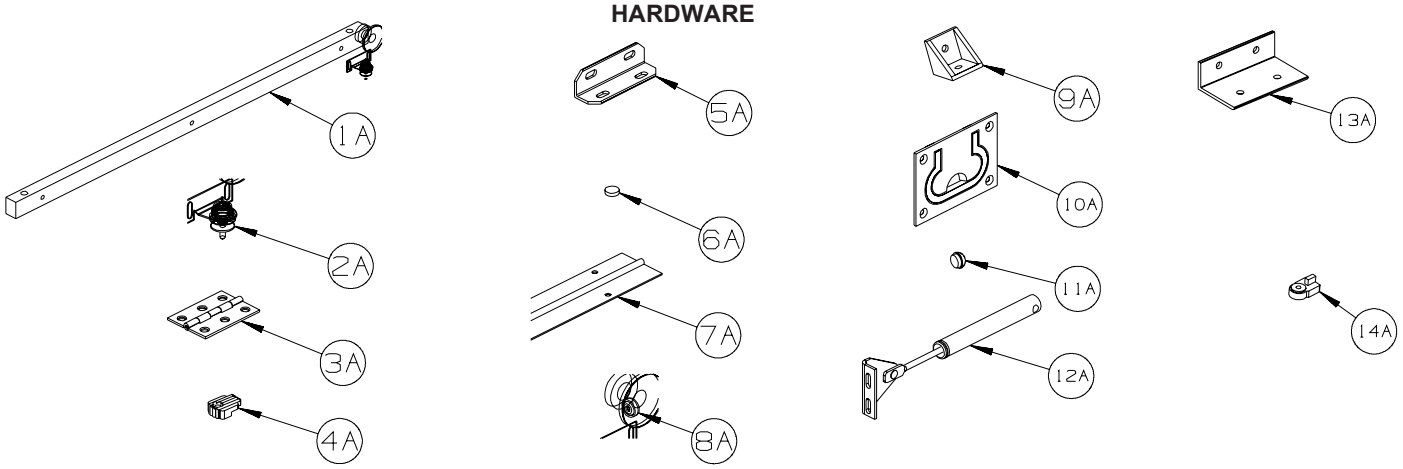

KEY	PART NUMBER	U/M	DESCRIPTION
1A	P34509-01-P14	EA	RAIL END - RH/LH - TOWEL RACK - CONCERT CHERRY
1A	P34509-01-J70	EA	RAIL END - RH/LH - TOWEL RACK - WASHED MAPLE
1A	P34509-01-RE0	EA	RAIL END - RH/LH - TOWEL RACK - HONEY CHERRY
1A	P34509-01-SA3	EA	RAIL END - RH/LH - TOWEL RACK - SIERRA MAPLE
2A	009013-01-000	EA	CATCH - BULLDOG - MALE/FEMALE
3A	009059-03-000	EA	HINGE - BRASS - 1.75"
3A	009059-04-000	EA	HINGE - 2” - ZINC
4A	009089-01-000	EA	CLIP - MIRROR
5A	016604-01-000	EA	BRACE - ANGLE - 2 1/2" - UNPAINTED METAL
5A	016604-05-000	EA	BRACE - ANGLE - 2 1/2" - OFF WHITE METAL
5A	016604-10-000	EA	BRACE - ANGLE - 2 1/2" - BLACK
6A	023320-01-000	EA	PAD - FELT 3/8" DIAMETER - ADHESIVE BACK - BROWN
6A	167370-01-01A	EA	PAD - FELT 1/2" DIAMETER - ADHESIVE BACK - GRAY
7A	041389-19-000	EA	HINGE - PIANO - 1 1/2" X 71.9" - UNPAINTED
7A	041389-25-000	EA	HINGE - PIANO - 1 1/2" X 55" - UNPAINTED
7A	041389-32-000	EA	HINGE - PIANO - 68" - OFF WHITE
8A	166569-01-01A	EA	COVER - SCREW - #8 - ANTIQUE WHITE
8A	166569-01-02A	EA	COVER - SCREW - #8 - BRIGHT WHITE
8A	166569-01-03A	EA	COVER - SCREW - #8 - SOFT WHITE
8A	166569-01-04A	EA	COVER - SCREW - #8 - CREAM
8A	166569-01-05A	EA	COVER - SCREW - #8 - BLACK
9A	065740-01-000	EA	BRACE - CABINET/CORNER - PLASTIC
10A	072871-01-000	EA	PULL - FLUSH - CHROME
11A	074045-08-000	EA	PLUG - 3/8" DOWEL-1/2" HEAD - OAK/SALEM CHERRY - CONCERT CHERRY
11A	074045-12-000	EA	PLUG - 3/8" DOWEL-1/2" HEAD - WASHED MAPLE
11A	074045-14-000	EA	PLUG - 3/8" DOWEL-1/2" HEAD - HONEY CHERRY
11A	074045-15-000	EA	PLUG - 3/8" DOWEL-1/2" HEAD - SIERRA MAPLE
11A	074045-16-000	EA	PLUG - 3/8" DOWEL-1/2" HEAD - BELMONT MAPLE
12A	074493-02-000	EA	SUPPORT/PISTON SPRING - CABINET DOOR - 26 LBS
12A	074493-03-000	EA	SUPPORT/PISTON SPRING - CABINET DOOR - 12 LBS
13A	156732-01-01A	EA	BRACE - ANGLE - 2.5" - MILL
13A	156732-01-02A	EA	BRACE - ANGLE - 2.5" - OFF WHITE
13A	156732-03-01A	EA	BRACE - ANGLE - BLACK
14A	083204-03-000	EA	BUTTON - RETAINING MIRROR 5/16" TIP

COPYRIGHT © 2009 WINNEBAGO INDUSTRIES INC.

INTERIOR FINISH GROUP (CONTINUED)

HARDWARE (CONTINUED)

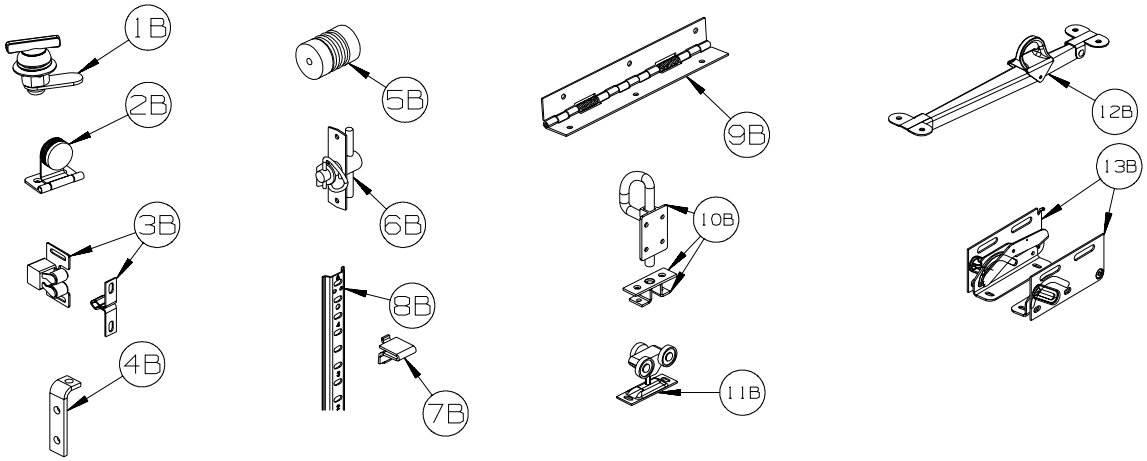

KEY	PART NUMBER	U/M	DESCRIPTION
1B	100710-01-02A	EA	LOCK - GLASS DOOR/TWIST TYPE - NICKEL
2B	100711-01-02A	EA	HINGE - GLASS DOOR - BLACK
3B	093586-06-000	EA	CATCH - W/STRIKE - SPRING ROLLER .236"/SPRINT STEEL .943"
4B	096826-01-01A	EA	BRACE - CABINET - 2” - E-COATED
4B	096826-02-01A	EA	BRACE - CABINET - 1” - E-COATED
5B	097872-04-000	EA	DOWEL - WOOD - 1" DIAMETER X 1.38" LONG - UNFINISHED
6B	098196-01-000	EA	LATCH - 1/4 TURN - T-BAR
7B	098979-01-000	EA	CLIP - ADJUSTABLE SHELF
8B	098980-01-000	EA	PILASTER - ADJUSTABLE SHELF - 18"
8B	098980-02-000	EA	PILASTER - ADJUSTABLE SHELF - 12"
8B	098980-03-000	EA	PILASTER - ADJUSTABLE SHELF - 9"
8B	098980-04-000	EA	PILASTER - ADJUSTABLE SHELF - 48"
8B	098980-05-000	EA	PILASTER - ADJUSTABLE SHELF - 15"
8B	098980-06-000	EA	PILASTER - ADJUSTABLE SHELF - 24"
9B	102920-01-02A	EA	HINGE - SPRING LOADED - NICKEL
9B	129753-01-01A	EA	HINGE - SPRING LOADED - 19" X 19" - BLACK
10B	103256-01-000	EA	LATCH COMPLETE (SLIDE)
11B	103874-01-000	EA	HANGER - SLIDING DOOR
12B	104181-01-01A	EA	SUPPORT - LEAF 5.3" EXTENDS TO 7.5" - SAFETY RING - METAL
13B	108126-01-000	EA	TRAY HINGE SET (QTY. 2 PER SET)

COPYRIGHT © 2009 WINNEBAGO INDUSTRIES INC.

INTERIOR FINISH GROUP (CONTINUED)

HARDWARE (CONTINUED)

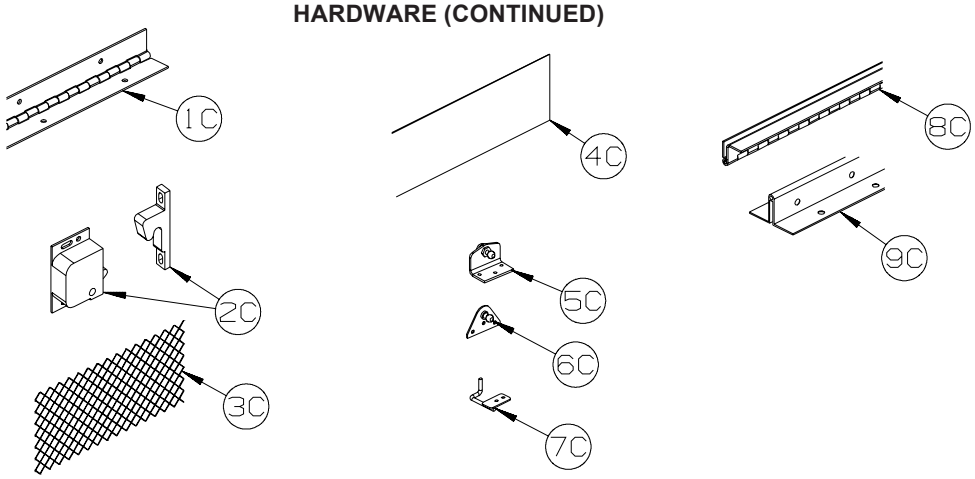

KEY	PART NUMBER	U/M	DESCRIPTION
1C	110496-01-02A	EA	HINGE - NICKEL - 2” X 32”
1C	110496-06-02A	EA	HINGE - NICKEL - 2" X 9.5"
1C	158921-01-04B	EA	HINGE - PIANO - TRUNK DOOR - 2" X 21.9" - BLACK
2C	117095-02-01A	EA	LATCH - DOOR - GRABBER W/KEEPER - BLACK - 10 LB PULL
2C	117095-03-01A	EA	LATCH - DOOR - GRABBER W/KEEPER - PLASTIC - BLK-15 LB PULL
3C	118200-01-01A	SF	MESH - PLASTIC 1/2" - 48" X LENGTH = SF - BLACK
4C	122717-06-01A	FT	PAD - NON-SKID - PSA - 5"W
5C	126263-02-02B	EA	BRACKET - GAS SPRING W/BALL STUD - E-COATED
5C	126263-06-02B	EA	BRACKET - GAS SPRING W/INSIDE BALL STUD - E-COATED
6C	126263-05-02B	EA	BRACKET - GAS SPRING W/BALL STUD - E-COATED
6C	126263-08-02B	EA	BRACKET - GAS SPRING W/CENTERED BALL STUD - E-COATED
7C	130798-01-02B	EA	GUIDE - POCKET DOOR - E-COATED
8C	134099-01-02A	EA	HINGE - PIANO - WRAP AROUND - 15.7" - NICKEL PLATED
9C	135538-03-02A	EA	HINGE - PIANO - FULL WRAP - 15.7" - CHROME

COPYRIGHT © 2009 WINNEBAGO INDUSTRIES INC.

INTERIOR FINISH GROUP (CONTINUED)

HARDWARE (CONTINUED)

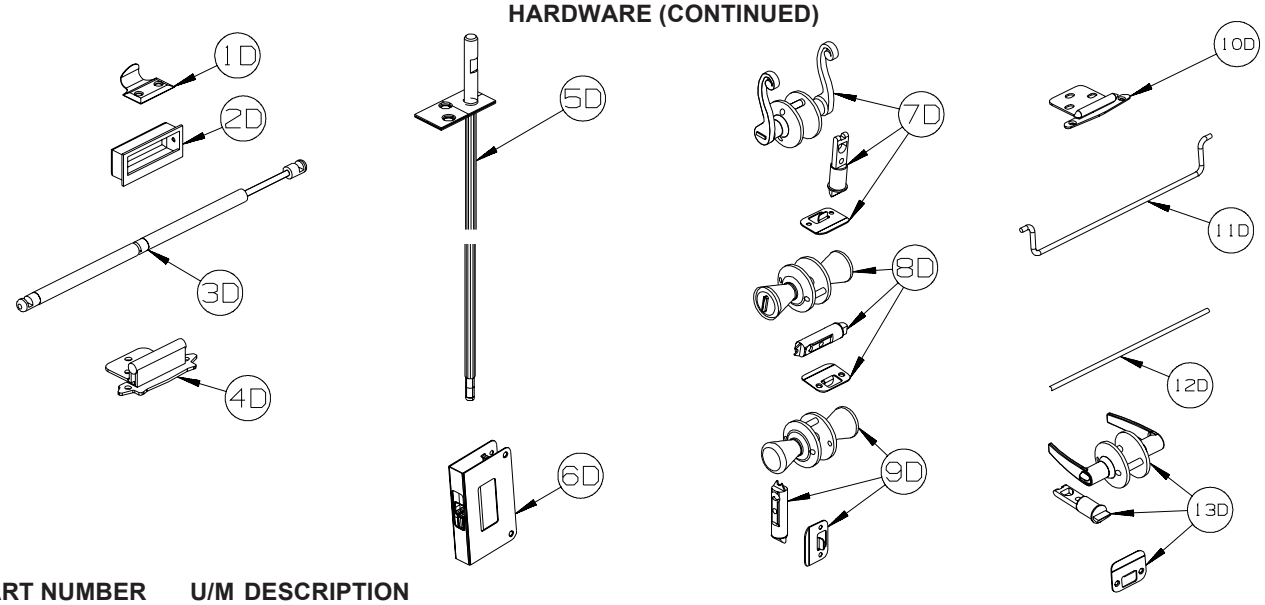

KEY	PART NUMBER	U/M	DESCRIPTION
1D	137463-01-02A	EA	LIFT - HOOK - PEWTER
2D	139136-02-02A	EA	HANDLE - .35” RECESSED - PEWTER
3D	142569-07-000	EA	SPRING/GAS - 20 LB - 20" EXTENDED/12" COMPRESSED
3D	142569-15-000	EA	SPRING/GAS - 120 LB - 20" EXTENDED/12" COMPRESSED
3D	142569-16-000	EA	SPRING/GAS - 90 LB - 20" EXTENDED/12" COMPRESSED
3D	142569-29-000	EA	SPRING/GAS - 20 LB - 9.9" EXTENDED/5.9" COMPRESSED
3D	142569-31-000	EA	SPRING/GAS - 30 LB - 11.8" EXTENDED/7.3" COMPRESSED
4D	143468-02-03A	EA	HINGE - SELF CLOSING - SATIN NICKEL
4D	143468-02-04A	EA	HINGE - SELF CLOSING - OIL RUBBED BRONZE
5D	145939-05-02A	EA	ROD/LATCH - AISLE DOOR - NICKEL
6D	145939-04-02A	EA	LATCH/SLIDE - AISLE DOOR(1" THICK DOOR)-NICKEL/BLACK SLIDE
6D	145939-04-03A	EA	LATCH/SLIDE - AISLE DOOR(1" THICK DOOR)-OIL RUBBED BRONZE
7D	146064-01-02A	EA	LOCK/PRIVACY (LOCKING) LEVER STYLE - SATIN PEWTER
7D	146064-02-02A	EA	LOCK/PASSAGE (NON LOCKING) LEVER STYLE - PEWTER
8D	146064-05-01A	EA	LOCK/PRIVACY (LOCKING) “TULIP” STYLE KNOB - SATIN NICKEL
9D	146064-06-01A	EA	LOCK/PASSAGE (NON LOCKING) “TULIP” STYLE KNOB-SATIN NICKEL
10D	146553-01-03A	EA	HINGE - CABINET DOOR - SATIN NICKEL
11D	146801-01-02A	EA	ROD/TOWEL BAR (OFFSET) - PEWTER
12D	146840-03-02A	EA	ROD - .25" X 11.7" - PEWTER
12D	146840-04-02A	EA	ROD - .25" X 13.1" - PEWTER
13D	146064-08-01A	EA	LOCK/PASSAGE (NON LOCKING) LEVER STYLE - SATIN NICKEL
13D	146064-07-01A	EA	LOCK/PRIVACY (LOCKING) LEVER STYLE - SATIN NICKEL

COPYRIGHT © 2009 WINNEBAGO INDUSTRIES INC.

INTERIOR FINISH GROUP (CONTINUED)

HARDWARE (CONTINUED)

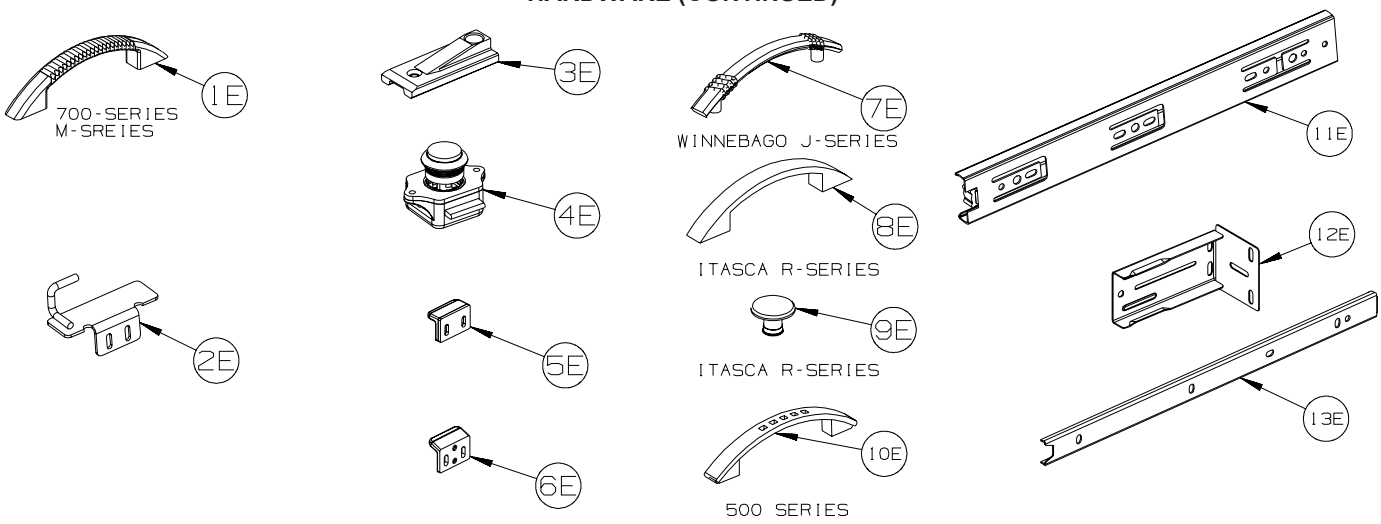

KEY	PART NUMBER	U/M	DESCRIPTION
1E	148816-01-02A	EA	PULL - CABT DR- NICKEL - ASPECT 700-SERIES, DESTINATION & LATITUDE M-SERIES TRADITIONAL
2E	149607-01-02B	EA	GUIDE - F/POCKET DOOR - 1.6” BENT ROD - E-COATED
2E	149607-03-02B	EA	GUIDE - F/POCKET DOOR - 2.9” BENT ROD - E-COATED
3E	150983-01-01A	EA	STRIKE/BLOCK - WEDGE STYLE - F/SLIDE DOOR - 3" X 1.2" - BLACK
4E	151380-01-01A	EA	LATCH - CABINET DOOR - PUSH BUTTON - SILVER
4E	151380-01-02A	EA	LATCH - CABINET DOOR - PUSH BUTTON - BLACK
5E	151380-02-01A	EA	STRIKE - CABINET DOOR LATCH - W/SPACER
6E	151380-03-01A	EA	STRIKE - CABINET DOOR LATCH - W/SPACER
7E	152302-01-01A	EA	PULL - CABINET DOOR - SATIN NICKEL - ADVENTURER J-SERIES
8E	152304-01-01A	EA	PULL - CABINET DOOR - BRONZE- ELLIPSE R-SERIES
9E	152305-01-01A	EA	KNOB - DOOR/DRAWER - BRONZE - ELLIPSE R-SERIES
10E	152950-01-01A	EA	PULL - DOOR/DRAWER - BRUSHED NICKEL - VIEW & NAVION 500-SERIES
11E	153000-01-01A	EA	SLIDE - CABINET MOUNT - 11.8"
11E	153000-03-01A	EA	SLIDE - CABINET MOUNT - 13.8"
11E	153000-05-01A	EA	SLIDE - CABINET MOUNT - 15.7"
11E	153000-07-01A	EA	SLIDE - CABINET MOUNT - 17.7"
11E	153000-09-01A	EA	SLIDE - CABINET MOUNT - 19.7"
11E	153000-11-01A	EA	SLIDE - CABINET MOUNT - 21.6"
11E	153000-14-01A	EA	SLIDE - CABINET MOUNT - 23.6"
11E	153000-16-01A	EA	SLIDE - CABINET MOUNT - 7.9"
11E	153000-18-01A	EA	SLIDE - CABINET MOUNT - 9.8"
11E	153000-20-01A	EA	SLIDE - CABINET MOUNT - 25.6"
12E	153000-13-01A	EA	BACKSOCKET - DRAWER SLIDE
13E	153000-02-01A	EA	SLIDE - DRAWER MOUNT - 11.8"
13E	153000-04-01A	EA	SLIDE - DRAWER MOUNT - 13.8"
13E	153000-06-01A	EA	SLIDE - DRAWER MOUNT - 15.7"
13E	153000-08-01A	EA	SLIDE - DRAWER MOUNT - 17.7"
13E	153000-10-01A	EA	SLIDE - DRAWER MOUNT - 19.7"
13E	153000-12-01A	EA	SLIDE - DRAWER MOUNT - 21.6"
13E	153000-15-01A	EA	SLIDE - DRAWER MOUNT - 23.4"
13E	153000-17-01A	EA	SLIDE - DRAWER MOUNT - 7.7"
13E	153000-19-01A	EA	SLIDE - DRAWER MOUNT - 9.6"
13E	153000-21-01A	EA	SLIDE - DRAWER MOUNT - 25.4"

COPYRIGHT © 2009 WINNEBAGO INDUSTRIES INC.

INTERIOR FINISH GROUP (CONTINUED)

HARDWARE (CONTINUED)

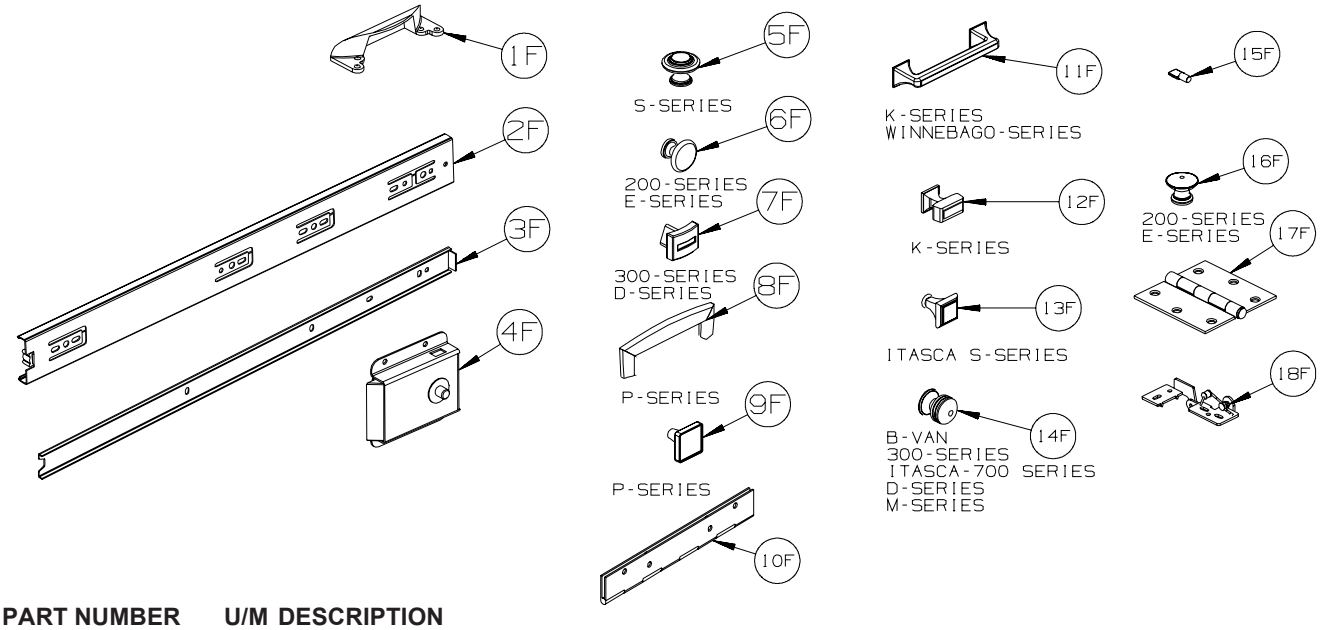

KEY	PART NUMBER	U/M	DESCRIPTION
1F	153308-01-01A	EA	PULL - VANITY STOOL - SATIN NICKEL
2F	153352-01-01A	EA	SLIDE - PANTRY - 19.7" - CABINET MOUNT
3F	153352-02-01A	EA	SLIDE - PANTRY - 19.5" - DRAWER MOUNT
4F	153353-01-01A	EA	LATCH - SLIDING/FLUSH - BLACK
5F	155803-01-01A	EA	KNOB CABINET DOOR - WROUGHT IRON - VECTRA S-SERIES
5F	155803-01-02A	EA	KNOB - CABINET DOOR - SATIN NICKEL - HORIZON S-SERIES
6F	155925-01-01A	EA	KNOB - DOOR/DRW - SATIN NICKEL - ACCESS & IMPULSE 200-SERIES/ VISTA & SUNSTAR E-SERIES
7F	156579-01-01A	EA	KNOB - DOOR/DRW - PEWTER - OUTLOOK & SPIRIT 300-SERIES/ SIGHTSEER & SUNOVA D-SERIES
8F	157246-01-01A	EA	PULL - CABINET DOOR/DRAWER - SATIN NICKEL - JOURNEY & MERIDIAN P-SERIES
9F	157246-02-01A	EA	KNOB - CABINET DOOR/DRAWER-SATIN NICKEL - JOURNEY & MERIDIAN P-SERIES
10F	158982-01-04B	EA	HINGE - CONTINUOUS - 2" X 8" - BLACK
10F	158982-01-01A	EA	HINGE - CONTINUOUS - 2" X 8" - ZINC
11F	162033-01-01A	EA	PULL - CABINET DOOR - BRUSHED NICKEL - SUNCRUISER K-SERIES, TOUR R-SERIES
12F	162033-02-01A	EA	KNOB - CABINET DOOR - BRUSHED NICKEL - SUNCRUISER K-SERIES
13F	162518-01-01A	EA	KNOB - DOOR/DRAWER - SATIN NICKEL - HORIZON S-SERIES
14F	163095-01-01A	EA	KNOB - CABINET DOOR - SATIN NICKEL - B-VAN, 300, ITASCA 700, D, M-SERIES
15F	154385-01-02A	EA	PIN - SUPPORT/GLASS DOOR - 1/4" - NICKEL
16F	165915-01-01A	EA	KNOB - DOOR/DRAWER - SATIN NICKEL - ACCESS/IMPULSE 200-SERIES, VISTA/SUNSTAR E-SERIES
17F	166114-01-01A	EA	HINGE - DOOR - 1/4" RADIUS CORNERS - SATIN NICKEL
18F	166474-01-01A	EA	HINGE - CABINET/CONCEALED - ANTIQUE BRASS
18F	166474-01-02A	EA	HINGE - CABINET/CONCEALED - CHROME

COPYRIGHT © 2009 WINNEBAGO INDUSTRIES INC.

LABELS GROUP

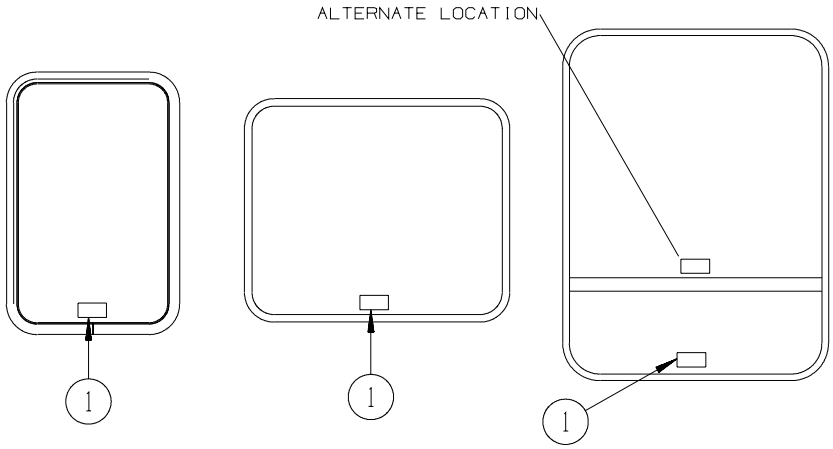

EXIT WINDOWS

KEY	PART NUMBER	U/M	DESCRIPTION
1	039290-01-000	EA	LABEL - WARNING - EXIT

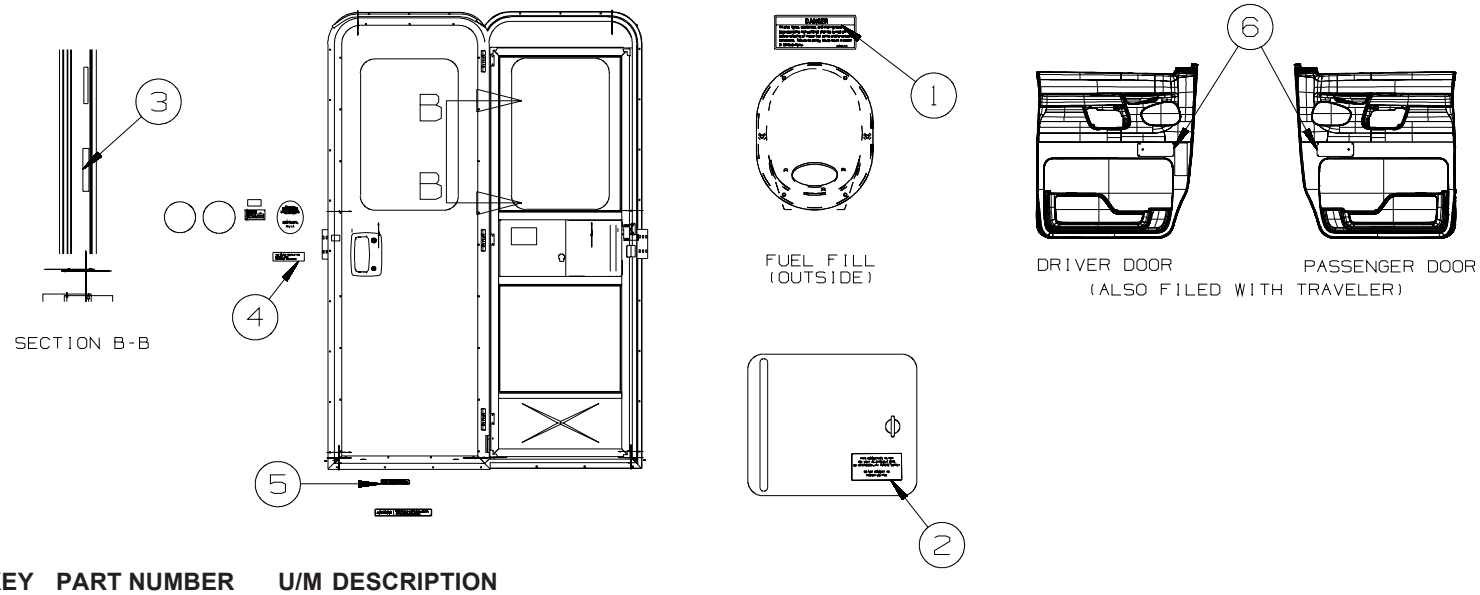

KEY	PART NUMBER	U/M	DESCRIPTION
1	124519-01-01A	EA	LABEL - WARNING/REFUELING - BLACK ON CLEAR
1	124519-02-01A	EA	LABEL - WARNING/REFUELING - BLACK ON CLEAR - 265
2	125306-04-01A	EA	LABEL - ELECTRICAL ENTRANCE-120/20V 50 AMP-BLACK ON CLEAR
2	125306-04-02A	EA	LABEL - ELECTRICAL ENTRANCE-120/20V 50 AMP-WHITE ON CLEAR
3	135869-01-01A	EA	LABEL - MERCURY CONTENT - BLACK 0N CLEAR
3	135869-01-02A	EA	LABEL - MERCURY CONTENT - WHITE ON CLEAR
4	099509-01-000	EA	LABEL - AWNING INSTALLATION
5	065748-01-000	EA	LABEL - WARNING - BATTERY CHARGING - UL
6	168454-01-01A	EA	LABEL - OCCUPANT/CCC - BLACK ON YELLOW

COPYRIGHT © 2009 WINNEBAGO INDUSTRIES INC.

LABELS GROUP (CONTINUED)

DRAIN COMPARTMENT

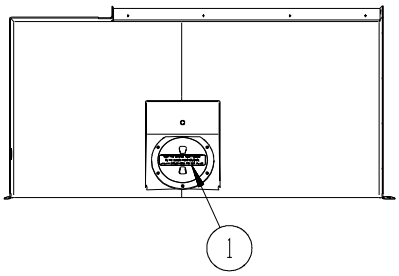

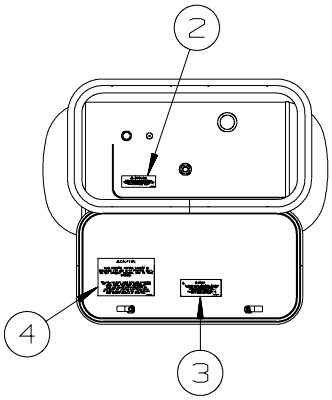

KEY	PART NUMBER	U/M	DESCRIPTION
1	123562-01-000	EA	LABEL - SERVICE/UTILITY ACCESS
2	079965-01-000	EA	LABEL - LPG - 80% CAPACITY
3	124519-01-01A	EA	LABEL - WARNING/REFUELING - BLACK ON CLEAR
3	124519-01-02A	EA	LABEL - WARNING/REFUELING - WHITE ON CLEAR
4	124520-01-01A	EA	LABEL - LP GAS ONLY - BLACK ON CLEAR
4	124520-01-02A	EA	LABEL - LP GAS ONLY - WHITE ON CLEAR
4	023769-01-000	EA	LABEL - WARNING - LPG - 265

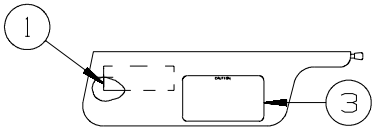

LABELS SHALL BE LOCATED ON OPPOSITE SIDE OF VISOR THAT THE AIR BAG LABEL IS INSTALLED ON.

INSTRUMENT CLUSTER REF

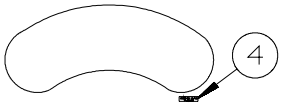

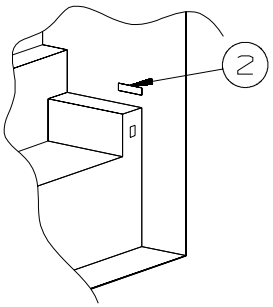

TYPICAL SEAT AND BELT CONFIGURATIONS

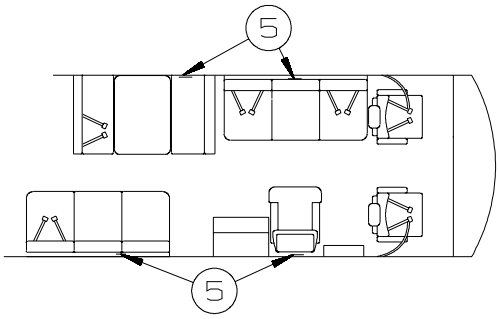

ATTACH LABEL ON OR NEXT TO:
+ANY SINGLE CHAIR WITHOUT BELTS.
+ANY DINETTE SEAT WITHOUT BELTS.
+ANY COUCH WITHOUT BELTS OR ANY SEATING POSITION ON THAT COUCH.
DO NOT ATTACH LABEL IF:
+DINETTE SEAT HAS AT LEAST ONE SET OF BELTS INSTALLED.

KEY	PART NUMBER	U/M	DESCRIPTION
1	126611-01-000	EA	LABEL - AIR BAG - VISOR
2	137260-01-01A	EA	LABEL - WARNING - REST EASY SOFA - BLACK ON CLEAR - 41H
3	056259-01-000	EA	LABEL - SAFETY CHECK LIST
4	155692-01-01A	EA	LABEL - ODOMETER - READ IN MILE - BLACK/WHITE
4	155692-01-02A	EA	LABEL - ODOMETER - READ IN MILE - WHITE/CLEAR
5	134538-01-01A	EA	LABEL - OCCUPANCY - NO SEAT BELT - BLACK ON CLEAR - US
5	134538-02-01A	EA	LABEL - OCCUPANCY - NO SEAT BELT - BLACK ON CLEAR - 265

COPYRIGHT © 2009 WINNEBAGO INDUSTRIES INC.

LABELS GROUP (CONTINUED)

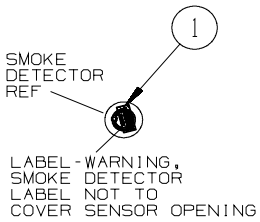

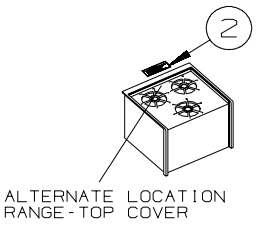

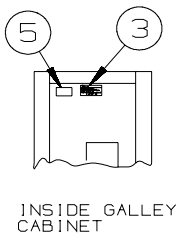

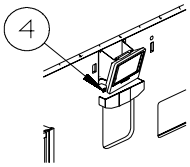

BEDROOM TV 730C

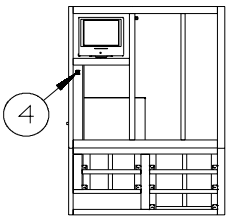

728B BEDROOM TV IN
WARDROBE CABINET

KEY	PART NUMBER	U/M	DESCRIPTION
1	077956-01-000	EA	LABEL - WARNING/SMOKE DETECTOR
2	134539-01-01A	EA	LABEL - WARNING - STOVE/HEATING - US - BLACK ON CLEAR
2	134539-01-02A	EA	LABEL - WARNING - STOVE/HEATING - US - WHITE ON CLEAR
2	134540-01-01A	EA	LABEL - WARNING - STOVE/HEATING - CSA - BLACK ON CLEAR - 265
2	134540-01-02A	EA	LABEL - WARNING - STOVE/HEATING - CSA - WHITE ON CLEAR - 265
3	073998-01-000	EA	LABEL - LPG/ODOR WARNING
4	159837-02-000	EA	LABEL - RELEASE/TV - BLACK/CLEAR/RED
5	099689-01-000	EA	LABEL - WARNING - CANCER/TOXICITY

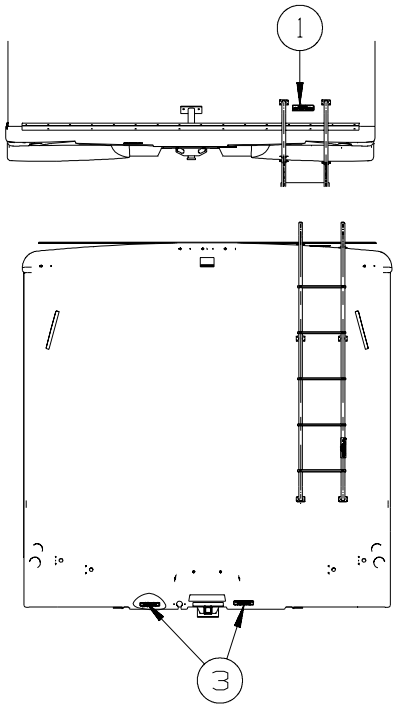

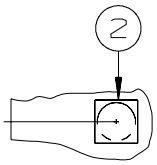

KEY	PART NUMBER	U/M	DESCRIPTION
1	163705-01-01A	EA	LABEL - WARNING - ROOF SLIPPERY - BLACK ON WHITE
2	120431-01-000	EA	LABEL - LOCATION - COAXIAL CABLE/SATELLITE ANTENNA
3	129669-01-01A	EA	LABEL - HITCH/VEHICLE RATE - 350 - WHITE ON CLEAR
3	129669-01-02A	EA	LABEL - HITCH/VEHICLE RATE - 350 - BLACK ON CLEAR

COPYRIGHT © 2009 WINNEBAGO INDUSTRIES INC.

LABELS GROUP (CONTINUED)

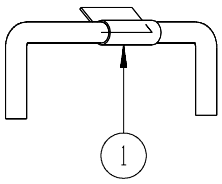

KEY	PART NUMBER	U/M	DESCRIPTION
1	128658-01-000	EA	LABEL - PROP ROD - ENTRY DOOR

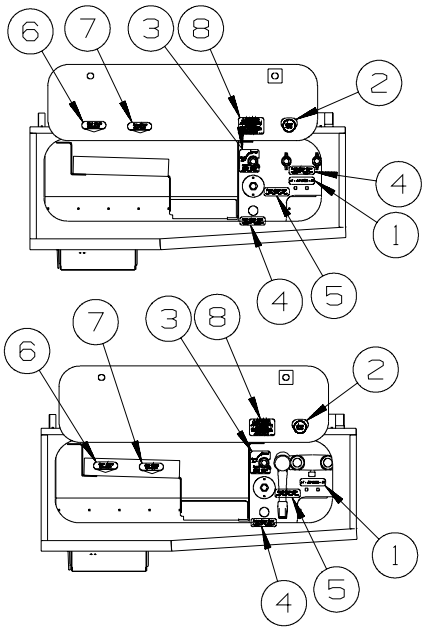

EXTERIOR WASH STATION

KEY	PART NUMBER	U/M	DESCRIPTION
1	136360-02-01A	EA	LABEL - AIR BAGS - BLACK/CLEAR
2	152544-03-01A	EA	LABEL - SWITCHES - WATER PUMP
3	152548-03-01A	EA	LABEL - VALVE/FRESH
4	154302-01-01A	EA	LABEL - FRESH WATER DRAIN - PANTONE/CLEAR
5	152538-02-01A	EA	LABEL - FRESH WATER - PANTONE/CLEAR
6	152543-03-01A	EA	LABEL - BLACK WASTE
7	152541-03-01A	EA	LABEL - GRAY WASTE
8	128725-02-01A	EA	LABEL - POTABLE WATER ONLY - BLACK ON CLEAR

COPYRIGHT © 2009 WINNEBAGO INDUSTRIES INC.

LP GROUP

LP SYSTEM

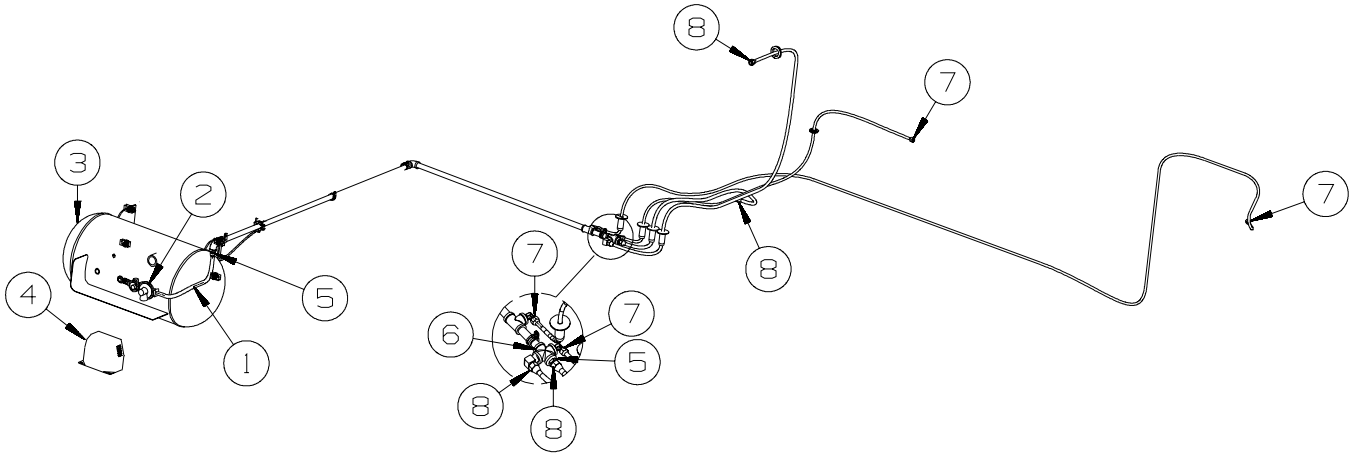

KEY	PART NUMBER	U/M	DESCRIPTION
1	045703-03-000	EA	HOSE - LP - 3/8"ID X 18" - 3/8"MPT X 1/2"F SWIVEL - US
1	045703-12-000	EA	HOSE - LP - 3/8"ID X 18" - 3/8"MPT X 1/2"F SWIVEL - CSA - 265
2	106150-05-000	EA	REGULATOR - TWO STAGE
3*	144116-09-000	EA	TANK - LP - 60 LB - 14"D X 29.75"L
	040440-02-000	EA	TRANSMITTER - DIAL/BOLT-ON - 0-90 OHM 2 TERM(POWER/GROUND)
4	144485-01-000	EA	COVER - LP REGULATOR
5	010329-01-000	EA	ADAPTER - 1/2"F X 1/2"MPT - BRASS
6	057042-01-000	EA	ADAPTER - CROSS 1/2"PIPE
7	010377-02-000	EA	NUT - 3/8" FLARE - FORGED - BRASS
8	010380-02-000	EA	NUT - 1/2" FLARE - FORGED - BRASS

***COMPONENT PARTS LISTED LATER IN THIS GROUP**

COMPONENT PARTS FOR LP SYSTEM

144116-09-000

KEY	PART NUMBER	U/M	DESCRIPTION	VENDOR NO.
	040421-01-712	EA	VALVE-SERV. W/O VAPOR RELIEF	V20373/V21202
	040421-01-713	EA	VALVE-RELIEF 1" W/SPRING 7"	V12560/V21207
	144116-01-700	EA	VALVE-OUTAGE(NO STEM REMOVE)	V20058
	144116-04-700	EA	FLOAT/SENDING UNIT W/O DIAL	G11530
	144116-04-701	EA	DIAL - TRANSMITER	G12845
	144116-09-700	EA	VALVE/FILL 80%	V20150

COPYRIGHT © 2009 WINNEBAGO INDUSTRIES INC.

SEALANTS & FASTENERS GROUP

SEALANTS & ADHESIVES

KEY	PART NUMBER	U/M	DESCRIPTION
	010405-02-000	EA	TAPE - THREAD SEALING - 3/8"
	064075-07-000	FT	SEAL - BULB - W/WIRED U CHANNEL - .3" X .5" CHANNEL-BLACK
	067788-01-000	EA	ADHESIVE - SPRAY - 3M - 19.5 OZ AEROSOL CAN
	069640-01-000	FT	SEALER - RIBBON - 1/4"DIAMETER X 30 FT - BLACK OR GRAY
	069640-02-000	FT	SEALER - TAPE - 1/8"THICK X 1/2"WIDE X 60 FT - GRAY
	069640-03-000	FT	SEALER - TAPE - 1/8"THICK X 3/4"WIDE X 60 FT - BLACK
	069640-07-000	FT	SEALER - TAPE - 3/32"THICK X 2"WIDE X 45 FT - GRAY
	069640-09-000	FT	SEALER - TAPE - 1/32"THICK X 2 1/2"WIDE X 80 FT - BRT WHT
	069640-10-000	FT	SEALER - TAPE - 1/32"THICK X 1 1/2"WIDE X 90 FT - GRAY
	069640-11-000	FT	SEALER - TAPE - 3/16"THICK X 3/8"WIDE X 40 FT - BLACK
	069640-13-000	FT	SEALER - TAPE - 3/32"THICK X 2"WIDE X 45 FT - BLACK
	069640-14-000	FT	SEALER - TAPE - 1/16"THICK X 1"WIDE X 100 FT - BLACK
	069640-15-000	FT	SEALER - TAPE - 1/16"THICK X 3/8"WIDE X 100 FT - BRT WHT
	069640-17-000	FT	SEALER - TAPE - 1/32"THICK X 1"WIDE X 150 FT - GRAY
	069640-18-000	FT	SEALER - TAPE - 1/8"THICK X 1/2"WIDE X 60 FT - BRT WHT
	069640-19-000	FT	SEALER - TAPE - 1/8"THICK X 3/4"WIDE X 60 FT - BRT WHT
	069640-20-000	FT	SEALER - TAPE - 1/8"THICK X 1/2"WIDE X 60 FT - BLACK
	069640-21-000	FT	SEALER - TAPE - 1/16"THICK X 1/2"WIDE X 100 FT - BRT WHT
	069640-22-000	FT	SEALER - TAPE - 1/32"THICK X 1/4"WIDE X 200 FT - BRT WHT
	069640-23-000	FT	SEALER - TAPE - 1/16"THICK X 3/4"WIDE X 100 FT - BRT WHT
	069640-27-000	FT	SEALER - TAPE - 1/16"THICK X 2 1/4"WIDE X 50 FT - BRT WHT
	069640-28-000	FT	SEALER - TAPE - 1/32"THICK X 1 7/8"WIDE X 90 FT - GRAY
	069640-30-000	FT	SEALER - TAPE - 1/32"THICK X 5/8"WIDE X 50 FT - GRAY
	069640-31-000	FT	SEALER - TAPE - 1/4"THICK X 3/4"WIDE X 15 FT - BLACK
	069640-32-000	FT	SEALER - TAPE - 1/16"THICK X 3/8"WIDE X 100 FT - BLACK
	069640-33-000	FT	SEALER - RIBBON - 3/8"DIAMETER X 20 FT - BLACK
	069640-34-000	FT	SEALER - RIBBON - 1/4"DIAMETER X 30 FT - BRIGHT WHITE
	069640-36-000	FT	SEALER - TAPE - 1/16"THICK X 1/2"WIDE X 100 FT - BLACK
	069640-37-000	FT	SEALER - TAPE - 1/16"THICK X 3/4"WIDE X 100 FT - BLACK
	069640-38-000	FT	SEALER - TAPE - 1/16"THICK X 3/4"WIDE X 100 FT - BRT WHT
	069640-39-000	FT	SEALER - TAPE - 1/16"THICK X 3"WIDE X 50 FT - BRT WHT
	069640-40-000	FT	SEALER - TAPE - 1/16"THICK X 3"WIDE X 50 FT - BRT WHT
	072889-28-000	EA	SEALANT/URETHANE-10 OZ TUBE W/NOZZLE-SELF LEVELING-BRT WHT
	072889-31-000	EA	SEALANT/URETHANE-10 OZ TUBE W/NOZZLE-SELF LEVELING - BLACK
	076322-02-000	FT	TAPE-DOUBLE COATED/ADHESIVE BK-.05"THK X 1"W X 108' - WHT
	076322-03-000	FT	TAPE-DOUBLE COATED/ADHESIVE BK-.05"THK X .5"W X 108' - WHT
	076322-05-000	FT	TAPE-DOUBLE COATED/ADHESIVE BK-.05"THK X .8"W X 108' - WHT
	076322-07-000	FT	TAPE-DOUBLE COATED/ADHESIVE BK-.05"THK X .5"W X 200' - BLK
	076322-13-000	FT	TAPE - FOAM/DOUBLE COATED - .020"THK X .75"W - CLEAR
	076322-21-000	FT	TAPE - FOAM/DOUBLE COATED - .045"THK X .50"W
	076322-22-000	FT	TAPE - FOAM/DOUBLE COATED - .045"THK X .75"W
	076322-23-000	FT	TAPE - FOAM/DOUBLE COATED - .045"THK X 1"W
	076322-25-000	FT	TAPE - FOAM/DOUBLE COATED - .025"THK X .5"W
	086276-01-000	EA	TAPE - DOUBLE SIDED - 1/2" WIDE X 108' LONG (SOLD BY ROLL)
	088479-01-000	EA	TAPE - ALUMINUM - 3"
	090340-01-000	FT	SEAL - FOAM - CLOSED CELL - 1/4" X 1/2" X 50'
	090340-02-000	FT	SEAL - FOAM - CLOSED CELL - 3/8" X 1/2" X 50'
	091255-02-000	FT	SEAL - ADHESIVE BACKED/FOAM - 3/64"THICK X 3/16"W X 1000'
	091255-03-000	FT	SEAL - ADHESIVE BACKED/FOAM - 1/4" THICK X 1/4"W X 1000'
	094401-01-000	EA	SEALER - BODY SEAM - FLEXICLEAR
	094401-04-000	EA	SEALER - BODY SEAM - CLEAR
	094401-05-000	EA	SEALER - BODY SEAM - 20OZ BLACK
	094401-06-000	EA	SEALER - BODY SEAM - 12OZ BLACK
	094401-07-000	EA	SEALER - BODY SEAM - CLEAR
	098408-01-000	FT	SEAL - SPONGE RUBBER - CLOSED CELL
	099069-01-000	FT	SEAL - RUBBER - CLOSED SPONGE - .5" WIDE X .12" THICK-BLK
	099418-01-000	FT	SEAL - D-SECTION/ADHESIVE BACK - ..44” X .44” - BLK RUBBER
	100128-02-000	FT	SEAL - FOAM/ADHESIVE BACK - .37" WIDE X .37" THICK X 60'
	104692-01-000	FT	SEAL - ADHESIVE BACKED FOAM - 3/4" THICK X 3/4" WIDE X 25'
	107721-07-000	FT	SEAL - ACCESS DOOR - .9"WIDE X 1.1"HIGH
	112864-01-000	FT	SEAL - FOAM/BUTYL COVERED - 3/8" X 35'
	112864-02-000	FT	SEAL - FOAM/BUTYL COVERED - 5/16" X 44'
	112864-05-000	FT	SEAL - FOAM/BUTYL COVERED - 1/2" X 3/16"
	112901-02-000	EA	ADHESIVE - PLEXUS - MA330 - 50ML - GRAY

COPYRIGHT © 2009 WINNEBAGO INDUSTRIES INC.

SEALANTS & FASTENERS GROUP (CONTINUED)

SEALANTS & ADHESIVES (CONTINUED)

KEY	PART NUMBER	U/M	DESCRIPTION
	112901-03-000	EA	ADHESIVE - PLEXUS - MA300 - 50ML - WHITE
	112902-03-000	EA	MIXER NOZZLE - F/GUN #00400102000 - SCOTCH-WELD & PLEXUS
	112902-04-000	EA	NOZZLE - ELEMENT - 1/4" X 3.5"
	113452-01-000	FT	SEAL/TRIM - FRONT - VINYL W/WIRE CARRIER - .020"
	113452-02-000	FT	SEAL/TRIM - FRONT - VINYL W/WIRE CARRIER - .027"
	113366-01-000	EA	ADHESIVE - INSTANT - 1 OZ
	115870-01-000	FT	SEAL/EDGE - TRIM
	120074-02-03A	EA	SILICONE - TUBE - W/O NOZZLE - LOW ODOR - SMOKEY WHITE
	120534-01-01A	EA	TAPE - SCOTCH - 3M - 1/2" FINE LINE
	123655-01-000	FT	SEAL - CLOSED CELL/FOAM
	123816-01-000	FT	TAPE - DOUBLE SIDED - 1" X .020" X 200' - CLEAR
	123816-02-000	FT	TAPE - DOUBLE SIDED - 1/2" X .035" X 200' - CLEAR
	123816-03-000	FT	TAPE - DOUBLE SIDED - 1/2" X .020" X 200' - CLEAR
	123816-04-000	FT	TAPE - DOUBLE SIDED - 6" X .0035" X 750' - CLEAR
	123816-06-000	FT	TAPE - DOUBLE SIDED - 3/4" X 3/4" X 200' - CLEAR
	123816-07-000	FT	TAPE - DOUBLE SIDED - 1 3/4" X 200' - CLEAR
	126427-01-000	EA	ADHESIVE - ALL PURPOSE - ABS/PVC
	126427-02-000	EA	PRIMER - CLEANER - FLEX PIPING
	131264-01-12A	EA	SILICONE - TUBE - W/NOZZLE - BONE
	131264-01-13A	EA	SILICONE - TUBE - W/NOZZLE - TRANSLUCENT
	131264-03-01A	EA	SILICONE - TUBE - W/O NOZZLE - SELF LEVELING -BRIGHT WHITE
	131264-04-02A	EA	SILICONE/SEALANT/ADHESIVE-FAST CURE F/GLASS/VINYL-SOFT WHT
	131264-05-01A	EA	SILICONE/SEALANT - ODORLESS - TUBE - W/NOZZLE - BLACK
	131264-05-02A	EA	SILICONE/SEALANT - ODORLESS - TUBE - W/NOZZLE - CLEAR
	131384-01-000	EA	ADHESIVE - JET WELD - 10 OZ CARTRIDGE
	132892-07-01A	FT	SEAL - BULB/SINGLE - W/U CHANNEL - .5" X 1" - BLACK
	152038-01-01A	EA	TAPE - PRESERVATION SEAL - 2" X 36YD ROLL - BLACK
	154585-01-01A	FT	SEAL - FOAM TAPE - ADHESIVE BACK - 3/8" X 3/8" - BLACK
	154585-02-01A	FT	SEAL - FOAM TAPE - ADHESIVE BACK - 3/4" X 1/2" - BLACK
	154585-03-01A	FT	SEAL - FOAM TAPE - ADHESIVE 2 SIDED - 1/8" X 3/4" - BLACK
	154585-04-01A	FT	SEAL - FOAM TAPE - ADHESIVE BACK - 5/8" X 1/8" - WHITE
	156622-01-01A	FT	SEALER - TAPE - 1/4"THICK X 3"WIDE X 100 FT - WHITE
	156622-02-01A	FT	SEALER - TAPE - 1/4"THICK X 2"WIDE X 100 FT - WHITE

BOLTS, NUTS AND WASHERS

KEY	PART NUMBER	U/M	DESCRIPTION
	0MD54F-06-000	EA	NUT - HEX W/SERATED FLANGE
	000C12-04-08B	EA	BOLT - HEX - 1/4-20 X 1/2 - GRADE #5 - ZINC
	000C12-04-12A	EA	BOLT - HEX - 1/4-20 X 3/4 - PLAIN 5
	000C12-04-40B	EA	BOLT - HEX - 1/4-20 X 2 1/2 - GRADE #5 ZINC
	000C12-05-16B	EA	BOLT - HEX - 5/16 - 18X1 - GRADE #5 - ZINC
	000C12-05-40B	EA	BOLT - HEX - 5/16"-18 X 2.5" - GRADE #5 - ZINC
	000C12-06-28B	EA	BOLT-HEX-3/8-16X13/4 ZN 5 - 5185-01
	000C12-08-24B	EA	BOLT - HEX - 1/2-13 X 1 1/2 - GRADE #5 - ZINC
	000C12-08-28B	EA	BOLT - HEX - 1/2-13 X 1 3/4 - GRADE #5 - ZINC
	000C12-08-44B	EA	BOLT - HEX - 1/2-13 X 2 3/4 - GRADE #5 - ZINC
	000C13-07-40B	EA	BOLT - HEX - 7/16-20 X 2 1/2 - GRADE #5 - ZINC
	000C13-07-48B	EA	BOLT - HEX - 7/16-20 X 3 - GRADE #5 - ZINC
	000C14-10-32B	EA	BOLT - HEX - 5/8-11 X 2.0 - GRADE #8 - ZINC
	000C18-05-40A	EA	BOLT - ELEVATOR - 5/16-18 X 2 1/2 - PL
	000C26-04-10B	EA	BOLT - HEX - SERRATED FLANGE - 1/4-20 X 5/8 - ZINC
	000C26-04-12F	EA	BOLT - HEX - SERRATED FLANGE -1/4-20 X 3/4-STAINLESS STEEL
	000C26-04-14B	EA	BOLT - HEX - SERRATED FLANGE - 1/4-20 X 7/8 - ZINC
	000C26-04-18B	EA	BOLT - HEX - SERRATED FLANGE - 1/4-20 X 1 1/8 - ZINC
	000C26-05-12B	EA	BOLT - HEX - SERRATED FLANGE - 5/16-18 X 3/4 - ZINC
	000C26-06-12B	EA	BOLT - HEX - SERRATED FLANGE - 3/8-16 X 3/4 - ZINC
	000C26-06-20B	EA	BOLT - HEX - SERRATED FLANGE - 3/8-16 X 1 1/4 - ZINC
	000C26-06-28B	EA	BOLT - HEX - SERRATED FLANGE - 3/8-16 X 1 3/4 - ZINC
	000C26-06-40B	EA	BOLT - HEX - SERRATED FLANGE - 3/8-16 X 2 1/2 - ZINC
	000C26-08-24B	EA	BOLT - HEX - SERRATED FLANGE - 1/2-13 X 1 1/2 - ZINC
	000C26-08-28B	EA	BOLT - HEX - SERRATED FLANGE - 1/2-13 X 1 3/4 - ZINC
	000C27-08-48B	EA	BOLT-CARR 1/2-13X3.00 GR5 - 97 M-SERIES
	000D24-10-00B	EA	NUT - HEX - SELF LOCKING - 10-32 - ZINC

COPYRIGHT © 2009 WINNEBAGO INDUSTRIES INC.

SEALANTS & FASTENERS GROUP (CONTINUED)

BOLTS, NUTS AND WASHERS (CONTINUED)

KEY	PART NUMBER	U/M	DESCRIPTION
	000D27-05-00B	EA	NUT - HEX LOCK - 5-40 - ZINC
	000D28-10-00B	EA	NUT - HEX - W/NYLON LOCK - 10-32 - ZINC
	000D29-04-00B	EA	NUT - HEX - SELF LOCKING - 1/4 X 20 - ZINC
	000D29-04-00F	EA	NUT - HEX - SELF LOCKING - 1/4 X 20 - STAINLESS STEEL
	000D29-06-00B	EA	NUT - HEX - W/NYLON LOCK - 3/8-16 - ZINC
	000D29-09-00B	EA	NUT - HEX - SELF LOCKING - 9/16-12 - ZINC
	000D34-04-00B	EA	NUT - HEX - LOCKING - 1/4-20 - ZINC
	000D34-06-00B	EA	NUT - HEX - LOCKING - 3/8-16 GRADE C - ZINC
	000D39-04-00B	EA	NUT - HEX - LOCKING W/SERRATED FLANGE - 1/4-20 - ZINC
	000D39-05-00B	EA	NUT - HEX - LOCKING W/SERRATED FLANGE - 5/16-18 - ZINC
	000D39-06-00B	EA	NUT - HEX - LOCKING W/SERRATED FLANGE - 3/8-18 - ZINC
	000D39-06-00D	EA	NUT - HEX - LOCKING W/SERRATED FLANGE - 3/8"-16 BLACK
	000D39-07-00B	EA	NUT - HEX - LOCKING W/SERRATED FLANGE - 7/16-14 - ZINC
	000D39-08-00B	EA	NUT - HEX - LOCKING W/SERRATED FLANGE - 1/2-13 - ZINC
	000D44-07-00B	EA	NUT - HEX - LOCKING W/SERRATED FLANGE - 7/16-20 - ZINC
	000D44-08-00B	EA	NUT - HEX - LOCKING W/SERRATED FLANGE - 1/2-20 - ZINC
	000D46-04-00A	EA	NUT - HEX - WELD - 1/4-20 - PLAIN
	000D65-08-00B	EA	NUT - HEX - LOCKING W/SERRATED FLANGE - 8-32 - ZINC
	000D73-08-00C	EA	NUT - HEX FLANGE - 1/2-13
	000D75-09-00B	EA	NUT - HEX LOCKING - 9/16-12 - ZINC
	000D76-06-00B	EA	NUT - HEX FLANGE - 3/8-16
	000E11-04-00F	EA	WASHER - LOCKING - 1/4 MED SPLIT - STAINLESS STEEL
	000E11-07-00B	EA	WASHER - LOCKING - 7/16 MED SPLIT - ZINC
	000E11-08-00B	EA	WASHER - LOCKING - 1/2 MED SPLIT - ZINC
	000E13-17-00B	EA	WASHER - FLAT - 3/8 AR - ZINC
	000E13-18-00B	EA	WASHER - FLAT - 3/8 WIDE - ZINC
	000E13-20-00B	EA	WASHER - FLAT - 7/16 WIDE - ZINC
	000E13-22-00B	EA	WASHER - FLAT - 1/2 WIDE - ZINC
	000E13-26-00B	EA	WASHER - FLAT - 5/8 WIDE - ZINC
	000E14-10-00B	EA	WASHER - LOCKING - #10 EXTERNAL TOOTH - ZINC
	000E16-10-00B	EA	WASHER - HARDENED - 5/8 - FLAT - ZINC
	000G45-05-16B	EA	BOLT - LAG - 5/16-9 X 1 - ZINC
	039715-01-000	EA	NUT-SERT - 1/4" DIAMETER - 20 THREADS
	040921-01-000	EA	NUT - SPEED - U TYPE - #10-24 - BLACK
	040921-03-000	EA	NUT - SPEED - U TYPE - #10
	040921-04-000	EA	NUT - SPEED - U TYPE - #8-.59" LENGTH X .44" WIDTH
	040921-05-000	EA	NUT - SPEED - U-TYPE - 8-.67" X .44" WIDE
	040921-11-000	EA	NUT - SPEED - U-TYPE - 8-.59" LENGTH X .44" WIDTH - BLACK
	041322-01-000	EA	WASHER - FLANGE - 15/32"ID X 2 3/8"OD - F/SEAT BELT MTG
	044364-02-000	EA	NUT - SPEED - FLAT - ROUND
	044533-01-000	EA	WASHER - 1 3/8"OD - FOR BUTTONS - PLASTIC
	051387-06-000	EA	BOLT - CARRIAGE W/O HOLE - 5/16-18 X 9 1/2 - ZINC
	058716-02-000	EA	WASHER - FLAT NYLON
	064081-03-000	EA	NUT - WING 3/8-16 - W/WELD NUT
	077071-01-000	EA	WASHER - FENDER - 3/16"ID X 1"OD
	087234-01-000	EA	NUT - JACK - 1/4 X 20 THD - MOLLY
	088787-12-000	EA	STUD - WELD - 1/4 - 20 X 1.0 LG - MN
	106956-03-000	EA	BOLT - HEX TAP - 1/2-13NC X 3 - GRADE 5 - FULL THREAD/ZINC
	106956-10-000	EA	BOLT - HEX TAP - 9/16-12NC X 3 5/8 -GRD 5-FULL THREAD/ZINC
	106956-11-000	EA	BOLT - HEX TAP - 1/2-13NC X 2 1/2 - GRD 5-FULL THREAD/ZINC
	106956-13-000	EA	BOLT - HEX TAP - 1/2-20 X 2 1/2 - GRD 5-FULL THREAD/ZINC
	107397-01-000	EA	WASHER - FENDER - 3/4"ID X 1"OD
	108067-03-000	EA	STUD - WELD - 1/4 - 20 X 1/2 CD
	109917-01-000	EA	WASHER - 1.5" X 1.25"
	109917-03-000	EA	WASHER - 1" X .50"
	109917-04-000	EA	WASHER - 1" X .75"
	128444-01-000	EA	WASHER - SPRING - CONICAL
	135092-02-01A	EA	BOLT - HEX - SERRATED FLANGE - 1/2-20 X 2 1/2-GRADE 5 ZINC
	135092-05-01A	EA	BOLT - HEX - SERRATED FLANGE - 1/2-20 X 1 - GRADE 5 ZINC
	143399-01-01A	EA	NUT/RETAINING - 3/8"- 24 NFT
	147284-02-000	EA	NUT/SELF RETAINING - 5/16"-18
	148817-01-000	EA	WASHER/SPUR - LOCKING

COPYRIGHT © 2009 WINNEBAGO INDUSTRIES INC.

SEALANTS & FASTENERS GROUP (CONTINUED)

SCREWS

KEY	PART NUMBER	U/M	DESCRIPTION
	0G1208-12-170	EA	SCREW - 8-18 X 3/4 POH - BRIGHT WHITE
	0G3908-08-170	EA	SCREW - SF/DR - 8-18 X 1/2 PPH - BRIGHT WHITE
	0G3908-16-170	EA	SCREW - SF/DR - 8-18 X 1 PPH - BRIGHT WHITE
	0G3908-24-170	EA	SCREW - SF/DR - 8-18 X 1 1/2 PPH - BRIGHT WHITE
	0G3910-10-420	EA	SCREW - SF/DR - 10-16 X .62 PPH - BRIARWOOD
	0G3910-12-170	EA	SCREW - SF/DR - 10-16 X 3/4 PPH - BRIGHT WHITE
	0G3910-24-170	EA	SCREW - SF/DR - 10-16 X 1 1/2 PPH - BRIGHT WHITE
	0G5508-08-370	EA	SCREW - SF/DR - 8-18 X .5 PWH - RIVERSTONE
	0G5508-08-380	EA	SCREW - SF/DR - 8-18 X .5 PWH - CASHMERE
	0G5508-08-420	EA	SCREW - SF/DR - 8-18 X .5 PWH - BRIARWOOD
	0G5508-08-440	EA	SCREW - SF/DR - 8-18 X .5 PWH - CAMEL
	0G5508-08-450	EA	SCREW - SF/DR - 8-18 X .5 PWH - SADDLE
	0G5508-12-170	EA	SCREW - SF/DR - 8-18 X 3/4 PWH - BRIGHT WHITE
	0G5508-12-330	EA	SCREW - SF/DR - 8-18 X 3/4 PWH - PUTTY
	0G5508-12-380	EA	SCREW - SF/DR - 8-18 X 3/4 PWH - CASHMERE
	0G5508-12-320	EA	SCREW - SF/DR - 8-18 X 3/4 PWH - GLACIER
	0G5508-12-450	EA	SCREW - SF/DR - 8-18 X 3/4 PWH - SADDLE
	0G5508-16-330	EA	SCREW - SF/DR - 8-18 X 1 PWH - PUTTY
	0G5508-16-370	EA	SCREW - SF/DR - 8-18 X 1 PWH - RIVERSTONE
	0G5508-16-380	EA	SCREW - SF/DR - 8-18 X 1 PWH - CASHMERE
	0G5508-16-440	EA	SCREW - SF/DR - 8-18 X 1 PWH - CAMEL
	0G5508-16-450	EA	SCREW - SF/DR - 8-18 X 1 PWH - SADDLE
	0G6008-16-170	EA	SCREW - SF/DR - 8-18 X 1 POH - BRIGHT WHITE
	0G6012-32-170	EA	SCREW - SF/DR - 12-14 X 2 POH - BRIGHT WHITE
	0G6710-08-170	EA	SCREW - 10-12 X 1/2 PPH - BRIGHT WHITE
	0G6710-12-170	EA	SCREW - 10-12 X 3/4 PPH - BRIGHT WHITE
	0G6806-16-170	EA	SCREW - 6-18 X 1 POH - BRIGHT WHITE
	0G6810-24-280	EA	SCREW - 10-12 X 1 1/2 POH - SOFT WHITE
	000C20-06-24T	EA	SCREW - 3/8-16 X 1 1/2 - FLAT SOCKET
	000G11-06-08B	EA	SCREW - 6-20 X 1/2 PPH - ZINC
	000G11-06-10B	EA	SCREW - 6-20 X 5/8 PPH - ZINC
	000G11-06-10J	EA	SCREW - 6-20 X 5/8 PPH - BRASS
	000G11-07-08B	EA	SCREW - 7-19 X 1/2 PPH - ZINC
	000G11-08-06B	EA	SCREW - 8-18 X 3/8 PPH - ZINC
	000G11-08-08T	EA	SCREW - 8-18 X 1/2 PPH - FLUOROCARBON COATING
	000G11-08-12B	EA	SCREW - 8-18 X 3/4 PPH - ZINC
	000G11-08-12P	EA	SCREW - 8-18 X 3/4 PPH - DARK BROWN
	000G11-08-12S	EA	SCREW - 8-18 X 3/4 PPH - OFF WHITE
	000G11-08-12T	EA	SCREW - 8-18 X 3/4 PPH - BLACK MAGNESIUM
	000G11-08-20B	EA	SCREW - 8-18 X 1 1/4 PPH - ZINC
	000G11-08-20G	EA	SCREW - 8-18 X 1 1/4 - ANTIQUE BRASS
	000G11-10-12D	EA	SCREW - 10-16 X 3/4 PPH - BLACK
	000G11-10-32P	EA	SCREW-10,16X2.00 PPH DK BRN
	000G12-06-08T	EA	SCREW - 6-20 X 1/2 POH - BLACK
	000G12-10-16F	EA	SCREW - 10-16 X 1 POH - STAINLESS STEEL
	000G13-05-10B	EA	SCREW - 5-12 X 5/8 PFH - ZINC
	000G13-06-06I	EA	SCREW - 6-20 X 3/8 PFH - BLACK ZINC
	000G13-06-08B	EA	SCREW - 6-20 X 1/2 PFH - ZINC
	000G13-06-08G	EA	SCREW - 6-20 X 1/2 PFH - ANTIQUE BRASS
	000G13-06-10G	EA	SCREW - 6-20 X 5/8 PFH - ANTIQUE BRASS
	000G13-06-16E	EA	SCREW - 6-20 X 1 PFH - CHROME
	000G13-06-16J	EA	SCREW - 6-20 X 1 PFH - BRASS
	000G13-06-24J	EA	SCREW - 6-20 X 1 1/2 PFH - BRASS
	000G13-07-10H	EA	SCREW - 7-19 X 5/8 PFH - BLACK
	000G13-07-12B	EA	SCREW - 7-19 X 3/4 PFH - ZINC
	000G11-08-08B	EA	SCREW - 8-18 X 1/2 PPH - ZINC
	000G13-08-10B	EA	SCREW - 8-18 X 5/8 PFH - ZINC
	000G13-08-109	EA	SCREW - 8-18 X 5/8 PFH
	000G13-08-16B	EA	SCREW - 8-18 X 1 PFH - ZINC
	000G13-08-24B	EA	SCREW - 8-18 X 1 1/2 PFH - ZINC
	000G13-08-28I	EA	SCREW - 8-18 X 1.75 PFH BLACK
	000G16-04-24B	EA	SCREW - MACHINE - 1/4-20 X 1 1/2 PPH
	000G18-08-16B	EA	SCREW - MACHINE - 8-32 X 1 PPH - ZINC
	000G18-08-22B	EA	SCREW - MACHINE - 8-32 X 1 3/8 PPH - ZINC

COPYRIGHT © 2009 WINNEBAGO INDUSTRIES INC.

SEALANTS & FASTENERS GROUP (CONTINUED)

SCREWS (CONTINUED)

KEY	PART NUMBER	U/M	DESCRIPTION
	000G18-08-24B	EA	SCREW - MACHINE - 8-32 X 1 1/2 PPH - ZINC
	000G19-10-08B	EA	SCREW - MACHINE - 10-32 X 1/2 PPH - ZINC
	000G19-10-10B	EA	SCREW - MACHINE - 10-32 X 5/8 - PPH - ZINC
	000G19-10-12F	EA	SCREW - MACHINE - 10-32 X 3/4 PPH - STAINLESS STEEL
	000G19-10-20B	EA	SCREW - MACHINE - 10-32 X 1 1/2 PPH - ZINC
	000G32-10-06B	EA	SCREW - 10-32 X 3/8 PPH - ZINC
	000G34-05-12B	EA	SCREW - HEX HEAD TAPPING - 5/16 X 3/4 LONG
	000G39-06-10T	EA	SCREW - SF/DR - 6-20 X 5/8 PPH - BLACK
	000G39-06-16T	EA	SCREW - SF/DR - 6-20 X 1 PPH - BLACK
	000G39-08-06B	EA	SCREW - SF/DR - 8-18 X 3/8 PPH - ZINC
	000G39-08-08B	EA	SCREW - SF/DR - 8-18 X 1/2 PPH - ZINC
	000G39-08-08S	EA	SCREW - SF/DR - 8-18 X 1/2 PPH - OFF WHITE
	000G39-08-08T	EA	SCREW - SF/DR - 8-18 X 1/2 PPH - BLACK
	000G39-08-12T	EA	SCREW - SF/DR - 8-18 X 3/4 PPH - BLACK
	000G39-08-16B	EA	SCREW - SF/DR - 8-18 X 1 PPH - ZINC
	000G39-08-16T	EA	SCREW - SF/DR - 6-20 X 1 PPH - BLACK
	000G39-08-24B	EA	SCREW - SF/DR - 8-18 X 1 1/2 PPH - ZINC
	000G39-08-24T	EA	SCREW - SF/DR - 8-18 X 1 1/2 PPH - BLACK
	000G39-08-32B	EA	SCREW - SF/DR - 8-18 X 2 PPH - ZINC
	000G39-08-169	EA	SCREW-SF/DR,8-18X1.00 PPH - FLUROCARBON SILVER
	000G39-10-08B	EA	SCREW - SF/DR - 10-16 X 1/2 PPH - ZINC
	000G39-10-10B	EA	SCREW - SF/DR - 10-16 X 5/8 PPH - ZINC
	000G39-10-12B	EA	SCREW - SF/DR - 10-16 X 3/4 PPH - ZINC
	000G39-10-12S	EA	SCREW - SF/DR - 10-16 X 3/4 PPH - OFF WHITE
	000G39-10-129	EA	SCREW - SF/DR - 10-16 X 3/4 PPH - FLUOROCARBON SILVER
	000G39-10-169	EA	SCREW - SF/DR - 10-16 X 1 PPH - FLUOROCARBON SILVER
	000G39-10-20B	EA	SCREW - SF/DR - 10-16 X 1 1/4 PPH - ZINC
	000G39-10-20T	EA	SCREW - SF/DR - 10-16 X 1 1/4 PPH - BLACK
	000G39-10-24B	EA	SCREW - SF/DR - 10-16 X 1 1/2 PPH - ZINC
	000G39-10-24T	EA	SCREW - SF/DR - 10-16 X 1 1/2" PPH - BLACK
	000G39-10-32B	EA	SCREW - SF/DR - 10-16 X 2 - PPH - ZINC
	000G39-10-48B	EA	SCREW - SF/DR - 10-16 X 3 - PPH - ZINC
	000G39-10-48T	EA	SCREW - SF/DR - 10-16 X 3 PPH - BLACK
	000G42-04-16B	EA	SCREW - SF/DR - 1/4-14 X 1 HWH - ZINC
	000G42-04-24B	EA	SCREW - SF/DR - 1/4-14 X 1 1/2 - ZINC
	000G52-06-05B	EA	SCREW - MACHINE - 6-32 X 5/16 PTH - ZINC
	000G52-06-06B	EA	SCREW - MACHINE - 6-32 X 3/8 PTH - ZINC
	000G54-04-14B	EA	SCREW - 1/4-20 X 7/8 PTH - TYPE 23 - ZINC PLATED
	000G55-08-12T	EA	SCREW - SF/DR - 8-18 X 3/4 PWH - BLACK
	000G55-08-16S	EA	SCREW - SF/DR - 8-18 X 1.00 PWH - OFF WHITE
	000G55-08-16T	EA	SCREW - SF/DR - 8-18 X 1 PWH - BLACK
	000G56-12-48B	EA	SCREW - WOOD - 12-11 X 3 POH - SPECIAL HARDENED
	000G60-08-16E	EA	SCREW - SF/DR - 8-1 X 1 POH - CHROME
	000G60-08-20F	EA	SCREW - SF/DR - 8-19X1.25 POH
	000G60-08-22B	EA	SCREW - SF/DR - 8-18 X 1.38 POH - ZINC
	000G60-10-20B	EA	SCREW - SF/DR - 10-16 X 1 1/4 POH - ZINC
	000G60-10-209	EA	SCREW - SF/DR - 10-16 X 1 1/4 POH - SILVER STALGAARD
	000G60-10-28T	EA	SCREW - SF/DR - 10-16 X 1 3/4 - BLACK
	000G62-06-12B	EA	SCREW-SF/DR,6-20X.75 PFH - ZINC
	000G62-06-249	EA	SCREW - SF/DR - 8-18 X 1.5 PPH - SILVER
	000G62-08-24B	EA	SCREW - SF/DR - 8-18 X 1 1/2 PFH
	000G62-08-24T	EA	SCREW - SF/DR - 8-18 X 1 1/2 PFH - BLACK
	000G67-08-32B	EA	SCREW - 8-15 X 2 PPH - ZINC
	000G67-10-08B	EA	SCREW - 10-12 X 1/2 PPH - ZINC
	000G67-10-08S	EA	SCREW - 10-12 X 1/2 PPH - OFF WHITE
	000G67-10-10B	EA	SCREW - 10-12 X 5/8 PPH - ZINC - TYPE A
	000G67-10-10D	EA	SCREW - 10-12 X 5/8 PPH - BLACK - TYPE A
	000G67-10-10P	EA	SCREW - 10-12 X 5/8 PPH - DARK BROWN
	000G67-10-10S	EA	SCREW - 10-12 X 5/8 PPH - OFF WHITE
	000G67-10-10T	EA	SCREW - 10-12 X 5/8 PPH - BLACK
	000G67-10-10V	EA	SCREW-10-12X5/8 PPH ZN O/W - TYPE A
	000G67-10-12P	EA	SCREW - 10-12 X 3/4 PPH - DARK BROWN
	000G67-10-24B	EA	SCREW - 10-12 X 1 1/2 PPH - ZINC
	000G68-06-10J	EA	SCREW - 6-18 X 5/8 POH - BRASS

COPYRIGHT © 2009 WINNEBAGO INDUSTRIES INC.

SEALANTS & FASTENERS GROUP (CONTINUED)

SCREWS (CONTINUED)

KEY	PART NUMBER	U/M	DESCRIPTION
	000G68-06-12B	EA	SCREW - 6-18 X 3/4 POH - ZINC & CLEAR
	000G68-06-12S	EA	SCREW - 6-18 X 3/4 POH
	029130-01-000	EA	SCREW - SNAP STUD - #8-16 X 5/8" LONG
	029130-02-000	EA	SCREW - SNAP STUD - #8-16 X 1 1/2" LONG
	029130-03-000	EA	SCREW - SNAP STUD - #8-16 X 1" LONG
	049465-03-000	EA	SCREW - 10-16 X 1 POH W/WASHER - OFF WHITE
	049465-17-000	EA	SCREW - 10-16 X 1 POH W/WASHER - BRIGHT WHITE
	054434-02-000	EA	SCREW - SF/DR - 10-16 X 2 - ZINC
	054434-03-000	EA	SCREW - SF/DR - 10-16 X 2 - PWH - ZINC
	075908-01-000	EA	SCREW - MACHINE - 10-32 X .56 PTH - EXTERNAL TOOTH - ZINC
	076790-01-000	EA	SCREW - 6-20 X 1 1/4 PPH - BLACK
	076790-05-000	EA	SCREW - 6-20 X 1/2 PPH - BLACK - THREAD CUTTING/WOOD
	087721-01-000	EA	SCREW - FLAT HEAD - TAPPING - 1/4" X 1 1/4" LONG - ZINC
	093249-01-000	EA	CAP/SCREW - MOLDED/VINYL - BLACK
	095772-01-000	EA	SOCKET-SNAP FASTNER1" SF/DR - SELF DRIVER
	097974-01-000	EA	SCREW - PARTICLE BOARD - 7-9 X 3/4 PPH
	101618-01-000	EA	SCREW - 1/4-20 X 3/4 HEX - TAPPING - STALGARD TYPE F
	113563-01-01A	EA	SCREW - 8 X 5/8 LONG SHOULDER/WASHER HEAD
	113563-01-02A	EA	SCREW - 8 X 5/8 LONG SHOULDER/WASHER HEAD - BRIGHT WHITE
	118383-01-12A	EA	RETAINER/RECESSED - F/.22" SCREW - RIVERSTONE
	118383-01-14A	EA	RETAINER/RECESSED - F/.22" SCREW - PEWTER
	118383-01-15A	EA	RETAINER/RECESSED - F/.22" SCREW - BRIARWOOD
	118383-02-13A	EA	RETAINER/RECESSED - F/.27" SCREW - OFF WHITE
	118383-04-04A	EA	CAP - F/RECESSED RETAINER - BRIGHT WHITE
	118383-04-10A	EA	CAP - F/RECESSED RETAINER - RIVERSTONE
	118383-04-13A	EA	CAP - F/RECESSED RETAINER - OFF WHITE
	118383-04-14A	EA	CAP - F/RECESSED RETAINER - PEWTER
	118383-04-15A	EA	CAP - F/RECESSED RETAINER - BRIARWOOD
	134126-01-01A	EA	SCREW/NAIL - HEX HEAD - 3/4"
	140040-01-000	EA	SCREW - 1/4-20 X 1 - BUTTON HEAD/SOCKET - W/LOCTITE
	149753-01-01A	EA	RETAINER/RECESSED - F/.22" SCREW - BLACK
	149753-01-02A	EA	RETAINER/RECESSED - F/.22" SCREW - BRIGHT WHITE
	149753-02-01A	EA	CAP - F/RECESSED RETAINER - BLACK
	149753-02-02A	EA	CAP - F/RECESSED RETAINER - BRIGHT WHITE
	154938-01-01A	EA	SCREW - SF/DR - 10-16 X 3/4 PPH - W/SELF SEAL - BRIGHT WHITE
	154938-01-02A	EA	SCREW - SF/DR - 10-16 X 3/4 PPH - W/SELF SEAL - BLACK
	154938-02-01A	EA	SCREW - SF/DR - 8-18 X 1 PFH - W/SELF SEAL - BRIGHT WHITE
	154938-02-02A	EA	SCREW - SF/DR - 8-18 X 1 PFH - W/SELF SEAL - BLACK
	154938-02-03A	EA	SCREW - SF/DR - 8-18 X 1 PFH - W/SELF SEAL - SILVER
	154938-03-02A	EA	SCREW - SF/DR - 8-18 X 5/8 PFH - W/SELF SEAL - BLACK
	154938-04-01A	EA	SCREW - SF/DR - 10-16 X 1" TPH - W/SELF SEAL - BRT WHT
	154938-04-02A	EA	SCREW - SF/DR - 10-16 X 1" TPH - W/SELF SEAL - BLACK
	154938-05-03A	EA	SCREW - SF/DR - 8-18 X 1.25" PFH - W/SELF SEAL - SILVER

COPYRIGHT © 2009 WINNEBAGO INDUSTRIES INC.

SEALANTS & FASTENERS GROUP (CONTINUED)

CLAMPS, CLIPS, GROMMETS, RIVETS & PLUGS

KEY	PART NUMBER	U/M	DESCRIPTION
	000H14-06-03R	EA	RIVET - MANDREL BLIND - 3/16 ALUMINUM
	000H16-04-06R	EA	RIVET - POP ALUMINUM - 1/8 X .313 - .375
	007161-01-000	EA	CLAMP - HOSE - SPRING TYPE - 1/2"
	008386-01-000	EA	GROMMET - SNAP - 3/8" DIAMETER - NYLON
	010495-01-000	EA	CLAMP - CABLE - 9/16"ID - BLACK
	010495-02-000	EA	CLAMP - CABLE - 3/8"ID - BLACK
	010495-04-000	EA	CLAMP - CABLE - 11/16"ID - WHITE
	010497-01-000	EA	CLAMP - CLOSED - 5/8"ID
	010497-02-000	EA	CLAMP - CLOSED - 1.5"ID
	010497-03-000	EA	CLAMP - CLOSED - 1"ID - CUSHIONED
	010497-04-000	EA	CLAMP - CLOSED - 1 5/8"ID
	010497-05-000	EA	CLAMP - CLOSED - 1/2"ID
	010497-07-000	EA	CLAMP - CLOSED - 3/8"ID
	010497-09-000	EA	CLAMP - CLOSED - 5/16"ID
	010497-10-000	EA	CLAMP - CLOSED - 7/8"ID
	010499-01-000	EA	CLAMP - CLOSED - 3/8"ID
	016188-03-000	EA	GROMMET - LP LINE - 3/8"HOLE X 2 1/2"LONG - RUBBER
	016188-04-000	EA	GROMMET - LP LINE - 1/2"HOLE X 2 1/2"LONG - RUBBER
	016188-05-000	EA	GROMMET - LP LINE - 3/8"HOLE X 1 1/4"LONG - RUBBER
	016188-06-000	EA	GROMMET - LP LINE - 3/8"HOLE X 3 1/4"LONG - RUBBER
	016188-07-000	EA	GROMMET - L/P LINE - 1/2"HOLE X 3 1/4"LONG
	016188-08-000	EA	GROMMET - LP LINE - 1/2"HOLE X 1 1/4"LONG - RUBBER
	016188-09-000	EA	GROMMET - LP LINE - .68"HOLE X 1 1/4"LONG - RUBBER
	016188-10-000	EA	GROMMET - LP GAS - .68" X 2.5"
	023942-01-000	EA	GROMMET - RUBBER - 2"OD
	041930-11-000	EA	RIVET - POP ALUMINUM - 1/8 X .188 - .250 - BRIGHT WHITE
	061420-04-000	EA	PLUG/PLASTIC - 1 1/4" DIAMETER
	061420-05-000	EA	PLUG/PLASTIC - 1 1/2" DIAMETER
	061420-09-000	EA	PLUG/PLASTIC - 1.00" DIAMETER
	061420-12-000	EA	PLUG/PLASTIC - 1.50" DIAMETER - RED
	061420-13-000	EA	PLUG/PLASTIC - 3/8" - FLUSH
	061420-14-000	EA	PLUG/PLASTIC - 7/8" DIAMETER - BLACK
	061420-15-000	EA	PLUG/PLASTIC - 2" DIAMETER - BLACK
	061420-16-000	EA	PLUG/PLASTIC - 2 1/8" DIAMETER - BLACK
	061420-18-000	EA	PLUG/PLASTIC - 1 3/4" DIAMETER - BLACK
	062401-01-000	EA	CLAMP - HOSE - WORMGEAR - .25" - 1"
	062401-02-000	EA	CLAMP - HOSE - WORMGEAR - 1.56" - 2.5" ID
	062401-03-000	EA	CLAMP - HOSE - WORMGEAR - .22" - 1" ID
	062401-04-000	EA	CLAMP - HOSE - WORMGEAR - .69" - 1.25" ID
	062401-06-000	EA	CLAMP - HOSE - WORMGEAR - .22" - .62" ID
	062401-09-000	EA	CLAMP - HOSE - WORMGEAR - 2.8" - 3.75" ID
	062401-11-000	EA	CLAMP - HOSE - WORMGEAR - 3.50" - 4.50" ID
	062401-13-000	EA	CLAMP - HOSE - WORMGEAR
	071015-11-000	EA	GROMMET - RUBBER - 1"ID FITS .12 MATERIAL - BLACK
	071015-13-000	EA	GROMMET - RUBBER - .62"ID X 1"OD W/.09" GROOVE - BLACK
	071015-20-000	EA	GROMMET - .38 ID FITS .06 MTL
	071015-22-000	EA	GROMMET - RUBBER - .62"ID X 1.12"OD W/.19" GROOVE - BLACK
	071015-26-000	EA	GROMMET - RUBBER - 1.5"ID X 2.1"OD W/.06" GROOVE - BLACK
	071015-29-000	EA	GROMMET - RUBBER - .3"ID X 1.3"OD W/.12" GROOVE - BLACK
	071015-30-000	EA	GROMMET - RUBBER - .3"ID X .81"OD W/.12" GROOVE - BLACK
	071015-39-000	EA	GROMMET - .75 ID FITS .06 MTL
	071015-41-000	EA	GROMMET - .125 ID FITS .188 MTL
	071015-42-000	EA	GROMMET - .25 ID FITS .06 MTL
	071015-43-000	EA	GROMMET-.25 ID,FITS .07 MATL, MINOR Z-4139
	071015-44-000	EA	GROMMET - .31 ID FITS .25 MTL
	075148-02-000	EA	CLAMP - GROUNDING - BRONZE SCREWS
	077955-01-000	EA	CLIP/J - 3/8" - VINYL COATED
	081211-03-000	EA	PLUG - PLASTIC - .50"DIAMETER - TRUSS HEAD - BLACK
	081211-04-000	EA	PLUG - PLASTIC - .46"DIAMETER - TRUSS HEAD - BLACK
	081211-06-000	EA	PLUG-PLASTIC,.468DIA,BLACK , HEYCO 1669
	083609-01-000	EA	CLAMP - WIRE - DUAL - EQUAL DIAMETERS - 5/8"
	083610-01-000	EA	CLAMP - WIRE - DUAL - UNEQUAL DIAMETERS - 3/4" & 1 1/4"
	083610-02-000	EA	CLAMP - WIRE - DUAL - UNEQUAL DIAMETERS - 3/4" & 2"
	083610-03-000	EA	CLAMP - WIRE - DUAL - EQUAL DIAMETERS - 2"

COPYRIGHT © 2009 WINNEBAGO INDUSTRIES INC.

SEALANTS & FASTENERS GROUP (CONTINUED)

CLAMPS, CLIPS, GROMMETS, RIVETS & PLUGS (CONTINUED)

KEY	PART NUMBER	U/M	DESCRIPTION
	083610-02-000	EA	CLAMP - WIRE - DUAL - UNEQUAL DIAMETERS - 3/4" & 2"
	083610-03-000	EA	CLAMP - WIRE - DUAL - EQUAL DIAMETERS - 2"
	088756-01-000	EA	GROMMET - WEB - 1 1/8"ID
	089329-02-000	EA	CLIP - SPRING
	091952-01-000	EA	CLIP - GRIPPER - 1" - BLACK VINYL COATED
	091952-02-000	EA	CLIP - GRIPPER - 3/4" - BLACK VINYL COATED
	091952-03-000	EA	CLIP - GRIPPER - 1/2" - BLACK VINYL COATED
	094362-02-000	EA	CLIP - XMAS TREE - BINDER HEAD - .9" LONG/ANY COLOR
	113133-02-01A	EA	RIVET - POP - ALUMINUM - 3/16 X .252 - .504 - BLACK
	114208-05-000	EA	GROMMET - EDGE LINER - FITS 2"
	118626-01-01A	EA	RIVET/POP - ALUMINUM - 3/16 X 1.2"(GRIP RANGE .1"-.4")
	118626-01-02A	EA	RIVET/POP - ALUMINUM - 3/16 X .08 - .375
	118626-02-01A	EA	RIVET/POP - ALUMINUM - 3/16 X .500 - .750
	118626-03-01A	EA	RIVET/POP - STAINLESS STEEL - 3/16 X .500 - .750
	137014-01-01A	EA	GROMMET - CABLE - ALMOND
	139118-02-01A	EA	GROMMET - SCREW - PLASTIC
	155498-01-01A	EA	CLAMP - CLOSED - 7/8"ID - VINYL DIP/GALVONIZED - BLACK

MISCELLANEOUS FASTENERS

KEY	PART NUMBER	U/M	DESCRIPTION
	008343-01-000	EA	TIE - WIRE - 6"
	008343-02-000	EA	TIE - WIRE - 14"
	008343-03-000	EA	TIE - WIRE - 7 1/2" - BLACK
	029094-04-000	YD	VELCRO TAPE/LOOP - 1"WIDE - W/ADHESIVE BACK - BLACK
	029096-03-000	YD	VELCRO TAPE/HOOK - 1"WIDE - BLACK
	029096-04-000	YD	VELCRO TAPE/HOOK - 1"WIDE - BLACK - W/ADHESIVE BACK (PSA)
	048394-02-000	YD	VELCRO TAPE - HOOK - ADHESIVE BACK - 3/4" WIDE - BEIGE
	085774-01-000	FT	FASTENER - DUAL LOCK - 1" WIDE - ADHESIVE BACK - BLACK
	085774-02-000	FT	FASTENER - DUAL HOOK - 1" WIDE - ADHESIVE BACK - BLACK
	088792-02-000	YD	VELCRO TAPE - LOOP - 3/4" - ADHESIVE BACK - BEIGE
	088792-04-000	YD	VELCRO TAPE - HOOK - 5/8" - NON-ADHESIVE BACK - WHITE
	088792-05-000	YD	VELCRO TAPE - LOOP - 5/8" - NON-ADHESIVE BACK - WHITE
	108046-02-000	EA	CABLE TIE - SCREW MOUNT 15"

COPYRIGHT © 2009 WINNEBAGO INDUSTRIES INC.

WATER & SEWAGE GROUP

DRAINAGE SYSTEM

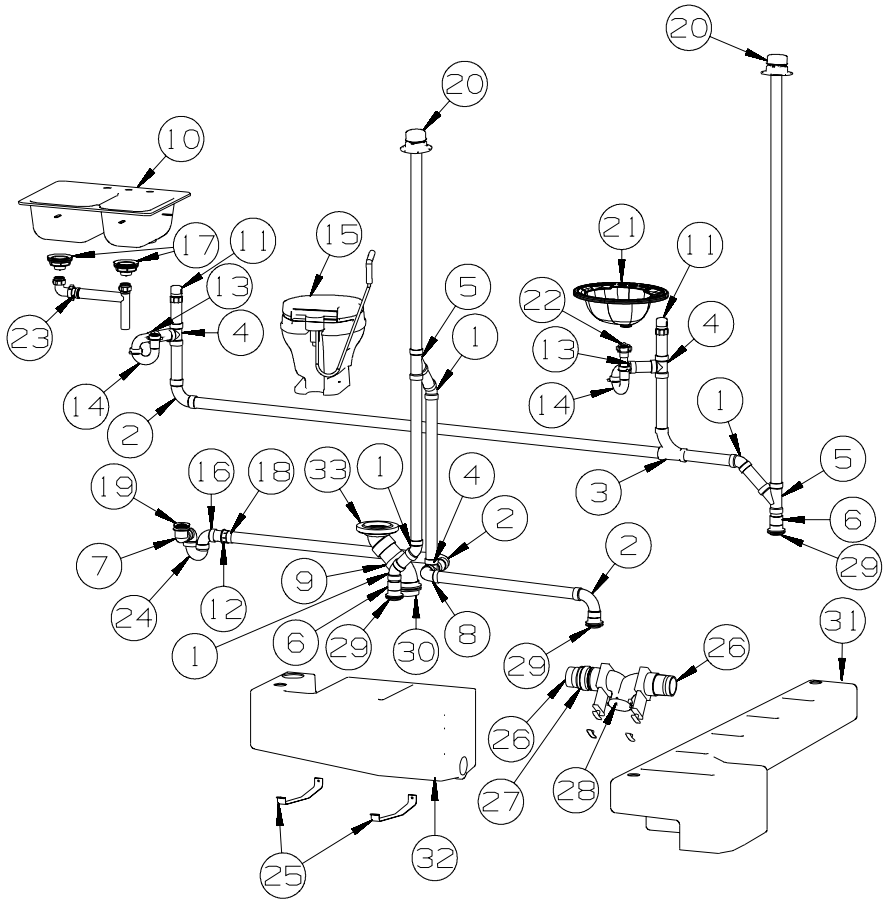

KEY	PART NUMBER	U/M	DESCRIPTION
1	010006-01-000	EA	ELBOW - 45 DEGREE - 1 1/2" HUB X HUB - PLASTIC
2	010008-01-000	EA	ELBOW - 90 DEGREE - 1 1/2" HUB X HUB - PLASTIC
3	031365-02-000	EA	TEE - 1 1/2" EXTRA LONG TURN - PLASTIC
4	010071-01-000	EA	TEE - SANITARY - 1 1/2" HUB X HUB X HUB - PLASTIC
5	010073-01-000	EA	WYE - 45 DEGREE - 1 1/2" HUB X HUB X HUB - PLASTIC
6	010115-01-000	EA	COUPLING - 1 1/2" HUB X HUB - PLASTIC
7	131486-01-000	EA	ELBOW - DRAIN 1 1/2" - LOW PROFILE - TUB DRAIN
8	033761-01-000	EA	ELBOW - 90 DEGREE - TURN - 1 1/2" HUB X 1 1/2" SPIGOT
9	010061-01-000	EA	ELBOW - 45 DEGREE ST - 3" SPIGOT & HUB - PLASTIC
10	163942-02-01A	EA	SINK/DOUBLE - LRG/SML BASIN - 25" X 19" - PLASTIC/SILVER
11	079968-01-000	EA	VENT - MECHANICAL/TRAP ARM - ANTI-SIPHON-2" X 7.3" PLASTIC
12	126425-02-000	EA	ADAPTER - SWIVEL - 1 1/2 FPT X SPIGOT
13	152146-01-000	EA	CONNECTOR - 1 1/2"P X 1 1/2"MPT
14	107538-02-000	EA	P-TRAP - PLASTIC - 1 1/2" W/EXTENSION ARM
14	011071-01-000	EA	P-TRAP - 1 1/2" - CSA - PLASTIC - 265
15*	147421-02-01A	EA	TOILET/AQUA MAGIC 5 (LOW) FOOTFLUSH - W/SPRAY - WHITE
16	010009-01-000	EA	ELBOW - 90 DEGREE - 1/4 BEND - 1 1/2" - PLASTIC
17	092303-01-000	EA	STRAINER - W/BASKET - GALLEY SINK - 4" OD
18	126424-01-000	EA	ADAPTER - 1 1/2" MPT X 1 1/2" HUB
19	066440-01-000	EA	STRAINER - SHOWER DRAIN - W/RUBBER WASHER
	127440-02-01A	EA	WASHER - RUBBER - 1.8" X .1"
20	083558-03-000	EA	VENT W/COVER F/PLUMBING STACK - OFF WHITE
20	083558-08-000	EA	VENT W/COVER F/PLUMBING STACK - BLACK
21	164615-01-01A	EA	SINK - LAVATORY - OVAL - 14" X 17" - BRUSHED NICKEL
22	106116-01-02A	EA	STRAINER/PLASTIC - STOPPER/TAILPIECE/GASKET & NUT-LAVATORY
23	011091-02-000	EA	WASTE - CONTINUOUS - DOUBLE SINK
24	037763-01-000	EA	P-TRAP - PLASTIC - 1 1/2 HXH W/UNION
25	166731-01-02B	EA	STRAP - HOLDING TANK - E-COATED
26	010129-03-000	EA	NIPPLE - 3" X 3" TOE - PLASTIC
27	078406-01-000	EA	COUPLER - 3" X 3" W/CLAMPS - RUBBER
28	136143-01-000	EA	VALVE - DUAL - 3" X 3"
28*	139513-01-000	EA	HOSE - SEWER - 3" X 10' - W/BAYONET TYPE ADAPTER
	062416-01-000	EA	ADAPTER - SEWER HOSE TO 3" PIPE

COPYRIGHT © 2009 WINNEBAGO INDUSTRIES INC.

WATER & SEWAGE GROUP (CONTINUED)

DRAINAGE SYSTEM (CONTINUED)

KEY	PART NUMBER	U/M	DESCRIPTION
29	061607-01-000	EA	GROMMET - HOLDING TANK - 1 1/2" NPS
30	061607-02-000	EA	GROMMET - HOLDING TANK - 3" NPS
31	165597-01-700	EA	TANK - HOLDING - 40 GALLON - W/3" NIPPLE - W/O FITTINGS
32	165591-01-700	EA	TANK - HOLDING - 29 GALLON - W/3" NIPPLE - W/O FITTINGS
33	151541-01-000	EA	FLANGE - CLOSET - ELBOW/SWIVEL - 4" X 3"

***COMPONENT PARTS LISTED LATER IN THIS GROUP**

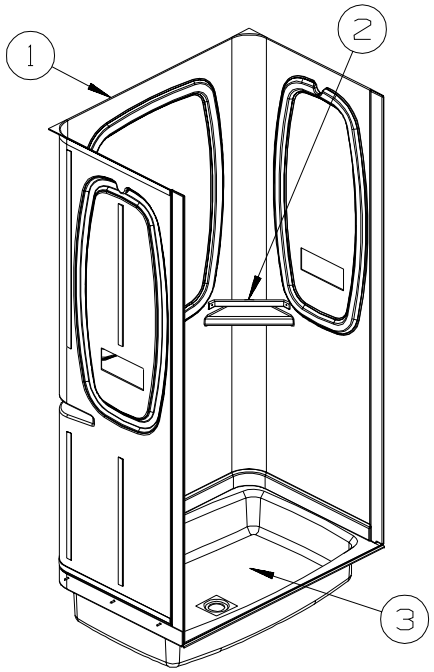

KEY	PART NUMBER	U/M	DESCRIPTION
1	147677-01-18A	EA	SURROUND - SHOWER/TUB
2	113714-04-02A	EA	RETAINER - SHELF/SHOWER - 8.4" - SOFT WHITE
3	M02630-87-S34	EA	SHOWER PAN - W/STRAINER
	154585-03-01A	FT	SEAL - FOAM TAPE - ADHESIVE 2 SIDED - 1/8" X 3/4" - BLACK

FROM: 00-00-00 THRU: 11-06-08

COPYRIGHT © 2009 WINNEBAGO INDUSTRIES INC.

WATER & SEWAGE GROUP (CONTINUED)

COMPONENT PARTS FOR DRAINAGE SYSTEM

136143-01-000

KEY	PART NUMBER	U/M	DESCRIPTION	VENDOR NO.
	070916-01-700	EA	VALVE ONLY (WASTE) 3"	T1003BU

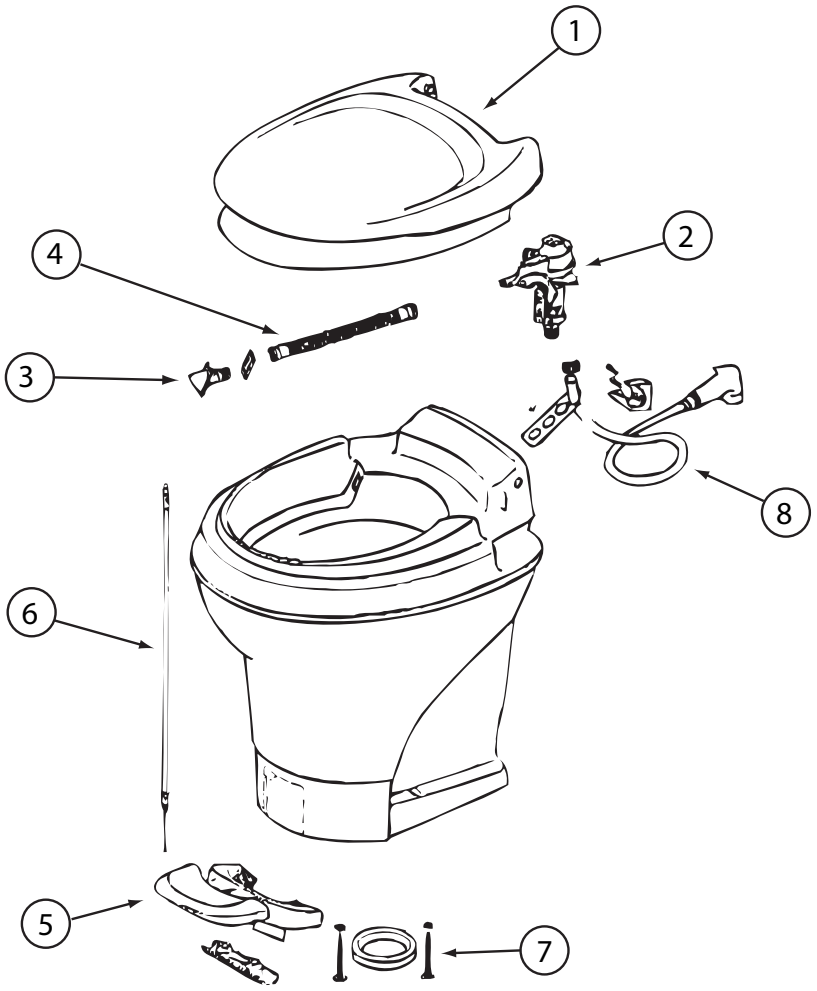

147421-01-01A, 147421-02-01A

KEY	PART NUMBER	U/M	DESCRIPTION	VENDOR NO.
1	147421-01-700	EA	SEAT & COVER ASSEMBLY(WHT)	31703
2	147421-01-701	EA	WATER MODULE ASSEMBLY	31705
3	147421-01-702	EA	NOZZLE ASSEMBLY	31706
4	147421-01-703	EA	LINK - WATER MODULE	31621
5	147421-01-704	EA	PEDAL - WHITE	31709
6	147421-01-705	EA	FOOT CABLE	31711
7	063740-01-706	EA	BOLT PACKAGE-FLOOR FLANGE	12524 THETFORD
8	147421-01-708	EA	HAND SPRAY KIT - WHITE HEAD	33226
	147421-01-706	EA	SEAL - BLADE	31708
	147421-01-707	EA	CAP (UNIVERSAL BOLT) - WHITE	31713

COPYRIGHT © 2009 WINNEBAGO INDUSTRIES INC.

WATER & SEWAGE GROUP (CONTINUED)

WATER SYSTEM

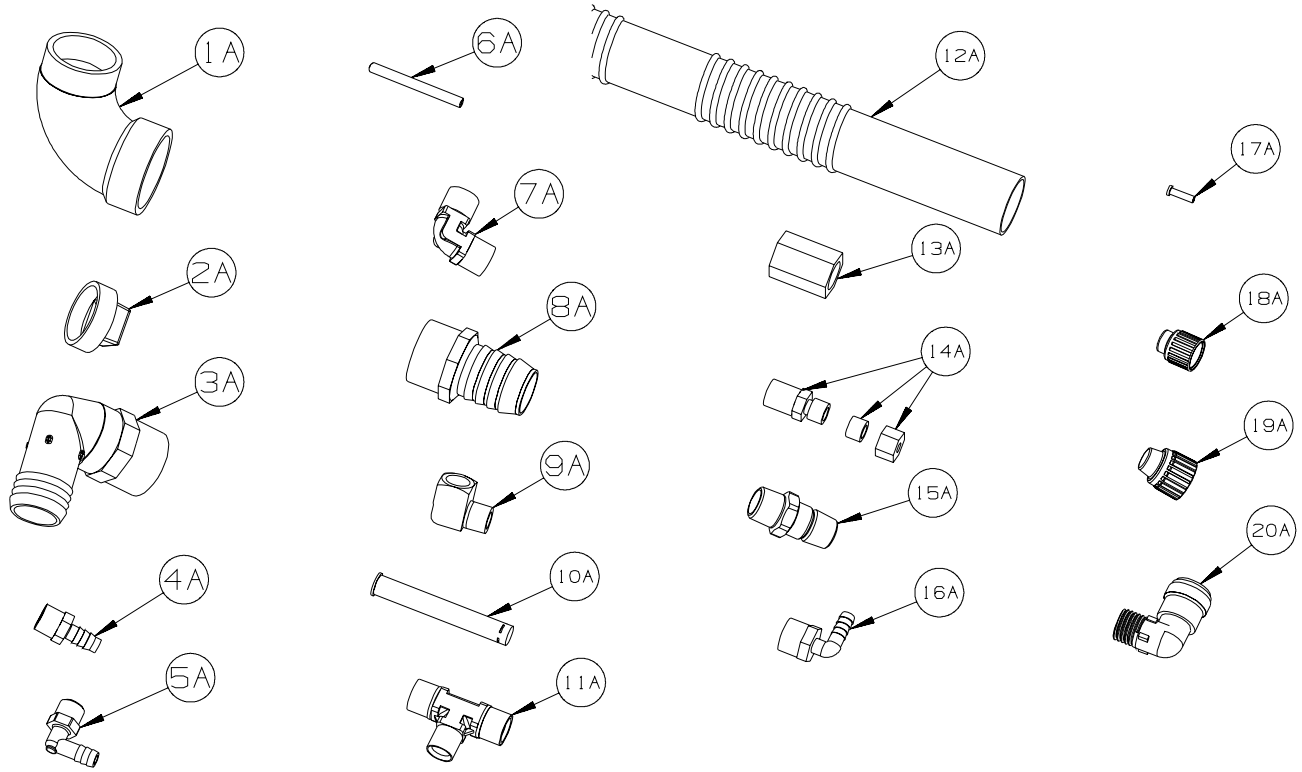

KEY	PART NUMBER	U/M	DESCRIPTION
1A	010009-01-000	EA	ELBOW - 90 DEGREE - 1/4 BEND - 1 1/2" PLASTIC
2A	010166-01-000	EA	PLUG/THREADED - 1 1/4"MPT - PLASTIC - BLACK - UL
3A	010219-01-000	EA	ELBOW - 1 1/4 MPT X 1 1/4 BARB - WATER FILL - PLASTIC
4A	010224-01-000	EA	ADAPTER - HOSE TO PIPE - 3/8 MPT X 3/8 BARB - PLASTIC
5A	035539-01-000	EA	ELBOW - 3/8 MPT X 3/8 BARB - PLASTIC
6A	039800-04-000	FT	TUBING - POLYBUTYL - 1/4"OD
6A	074462-02-000	FT	TUBING - VINYL - 3/8 ID X 20' - CLEAR
6A	112176-01-000	FT	TUBING - VINYL - REINFORCED - 1/2" ID
6A	124188-01-000	FT	TUBING - PEX - 1/2" ID X 20' - BLUE(COLD)
6A	124188-02-000	FT	TUBING - PEX - 1/2" ID X 20' - RED(HOT)
7A	039808-03-000	EA	ELBOW - 1/2" MPT X 1/2" MPT - PLASTIC
8A	044927-01-000	EA	ADAPTER - HOSE TO PIPE-1 1/4 MPTX1 1/4 BARB-BLACK PLASTIC
9A	065318-02-000	EA	ELBOW - 90 DEGREE - 3/8" MPT TO 3/8" FPT
10A	077954-02-000	EA	FILTER - WATER TANK - W/SCREEN IN TANK
11A	039798-01-000	EA	TEE - 1/2"MPT X 1/2"MPT X 1/2"MPT - PLASTIC
12A	079381-01-000	FT	TUBING - RIBBED FLEXIBLE/WATER FILL - 10 FT = 1EA-1.38ID
13A	101814-01-000	EA	COUPLING - FEMALE - 1/2" X 1/2" FPT - GRAY
14A	103798-01-000	EA	CONNECTOR - 1/4 OD X 3/8 MPT
15A	110438-02-000	EA	VALVE - CHECK - 1/2"MPT X 1/2"MPT - BRASS
16A	111223-02-000	EA	ELBOW - 1/2" MPT X 3/8" BARB - PLASTIC
16A	111223-04-000	EA	ELBOW - 1/2" MPT X 1/2" BARB - PLASTIC
16A	111888-01-000	EA	FERRULE - PLASTIC - .250 ID X .375 OD
17A	111888-02-000	EA	INSERT - BRASS - 1/4 COMP
18A	113697-01-000	EA	CAP - 3/8"P
19A	114427-01-000	EA	CAP - 1/2"P
20A	164906-01-000	EA	ELBOW - 90 DEGREE - 1/2" QUICK CONNECT X 1/2"MPT

COPYRIGHT © 2009 WINNEBAGO INDUSTRIES INC.

WATER & SEWAGE GROUP (CONTINUED)

WATER SYSTEM (CONTINUED)

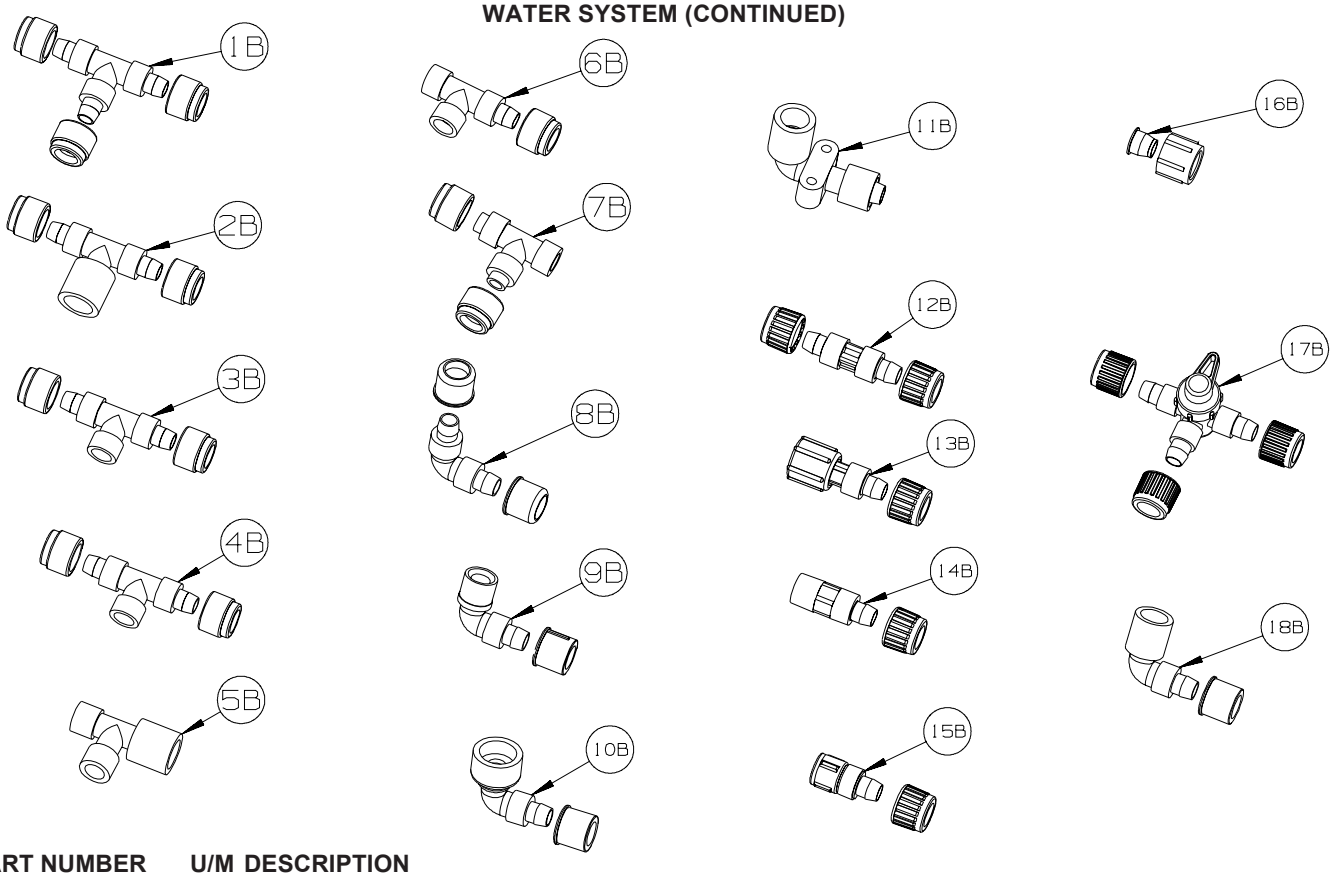

KEY	PART NUMBER	U/M	DESCRIPTION
1B	114428-01-000	EA	TEE - 1/2"P X 1/2"P X 1/2"P
2B	114428-02-000	EA	TEE - SWIVEL - 1/2"P X 1/2"P X 1/2"FPT
3B	114428-03-000	EA	TEE - 1/2"P X 1/2"P X 1/2"MPT
4B	114428-04-000	EA	TEE - 1/2"P X 1/2"P X 1/8"FPT
5B	114428-05-000	EA	TEE - 1/2" SWIVEL X 1/2" MPT X 1/2" MPT
6B	114428-06-000	EA	TEE - 1/2" P X 1/2" MPT X 1/2" MPT
7B	114428-07-000	EA	TEE - 1/2" P X 1/2" MPT X 1/2" P
8B	114429-01-000	EA	ELBOW - 1/2"P X 1/2"P
9B	114429-02-000	EA	ELBOW - 1/2"P X 1/2"MPT
9B	114429-04-000	EA	ELBOW - 1/2"P X 3/8"MPT
9B	114429-10-000	EA	ELBOW - SWIVEL - 1/2"MPT X 1/2"FPT
10B	114429-08-000	EA	ELBOW - SWIVEL - 1/2"P X 1/2"FPT
11B	114429-09-000	EA	ELBOW - 1/2"P X 1/2"FPT DROP EAR
12B	114430-01-000	EA	ADAPTER - 1/2"P X 1/2"P
13B	114430-02-000	EA	ADAPTER - SWIVEL - 1/2"P X 1/2"FPT
13B	114430-04-000	EA	ADAPTER - SWIVEL - 1/2"P X 3/8"MPT
14B	114430-03-000	EA	ADAPTER - 1/2"P X 1/2"MPT
15B	114430-06-000	EA	ADAPTER - 1/2"P X 3/8"FPT
15B	114430-09-000	EA	ADAPTER - 1/2"P X 1/2"FPT
16B	114430-10-000	EA	ADAPTER - NUT - PIPE CONNECTION - 1/2"
17B	114431-01-000	EA	VALVE - 180 DEGREE/CENTER DRAIN - 1/2"P - THREE WAY
18B	114429-11-000	EA	ELBOW - 1/2"P X 1/2"FPT

COPYRIGHT © 2009 WINNEBAGO INDUSTRIES INC.

WATER & SEWAGE GROUP (CONTINUED)

WATER SYSTEM (CONTINUED)

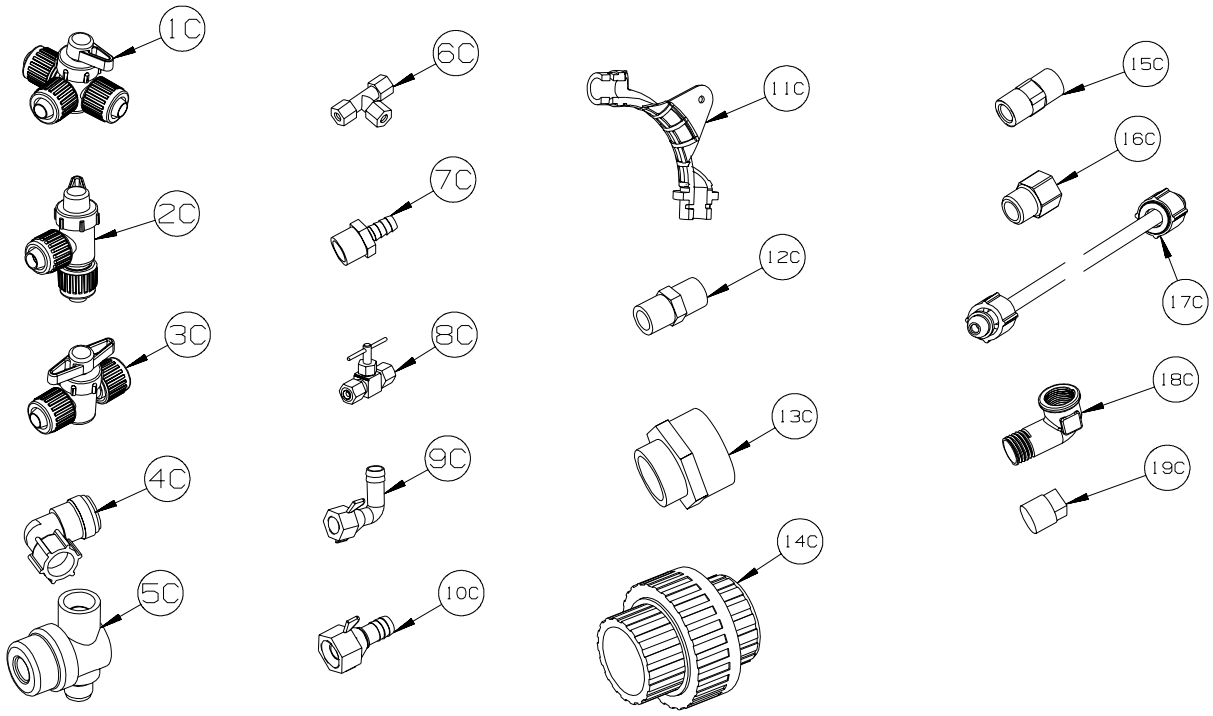

KEY	PART NUMBER	U/M	DESCRIPTION
1C	114431-02-000	EA	VALVE - WATER BYPASS - 1/2"P - THREE WAY (WATER HEATER)
2C	114431-03-000	EA	VALVE - 90 DEGREE DRAIN - 1/2"P
3C	114431-04-000	EA	VALVE - “INLINE SHUT-OFF” - 1/2"P
4C	164906-02-000	EA	ELBOW - 90 DEGREE - 1/2" QUICK CONNECT X 1/2"MPT - SWIVEL
5C	152925-01-01A	EA	FILTER - IN LINE - TWIST ON - 1/2" - BLACK
6C	118423-01-000	EA	FITTING - BRASS-TEE - 1/4C X 1/4C X 1/4C
7C	118809-01-000	EA	ADAPTER - 1/2" MPT X 3/8" BARB - PLASTIC
7C	118809-02-000	EA	ADAPTER - 1/2" MPT X 1/2" BARB - PLASTIC
8C	120868-01-000	EA	VALVE - NEEDLE - 1/4" COMPRESSION X 1/4" COMPRESSION
9C	123150-01-000	EA	ELBOW - 1/2 FPT X 1/2 BARB - SWIVEL
10C	123152-01-000	EA	ADAPTER - 1/2 FPT X 1/2 BARB - SWIVEL
11C	124184-01-000	EA	SUPPORT - WATER LINE - BEND
12C	132148-01-000	EA	CONNECTOR - 1/2” X 1/2”MPT - BRASS
13C	133835-01-000	EA	ADAPTER - REDUCING - 1 1/2" X 1 1/4"
14C	133889-01-000	EA	UNION - 1 1/2 DOUBLE SLIP - PVC
15C	135386-01-000	EA	NIPPLE - 1/2"
16C	136333-01-000	EA	ADAPTER - BRASS - 1/2"MPT X 1/2"FPT
17C	140821-01-000	EA	TUBE - WATER SUPPLY - 3/8" X 24"
17C	140821-02-000	EA	TUBE - WATER SUPPLY - 3/8" X 30"
17C	140821-03-000	EA	TUBE - WATER SUPPLY - 3/8" X 36"
17C	140821-04-000	EA	TUBE - WATER SUPPLY - 3/8" X 48"
17C	140821-05-000	EA	TUBE - WATER SUPPLY - 3/8" X 54"
17C	140821-06-000	EA	TUBE - WATER SUPPLY - 3/8" X 60"
17C	140821-07-000	EA	TUBE - WATER SUPPLY - 3/8" X 72"
17C	140821-08-000	EA	TUBE - WATER SUPPLY - 1/2" X 24"
17C	140821-09-000	EA	TUBE - WATER SUPPLY - 1/2" X 36"
17C	140821-10-000	EA	TUBE - WATER SUPPLY - 1/2" X 48"
18C	142812-01-000	EA	ELBOW - BRASS - 1/2"MPT X 1/2"FPT
19C	145609-01-000	EA	PLUG - BRASS - 1/2" MPT/HEX HEAD

COPYRIGHT © 2009 WINNEBAGO INDUSTRIES INC.

WATER & SEWAGE GROUP (CONTINUED)

WATER SYSTEM (CONTINUED)

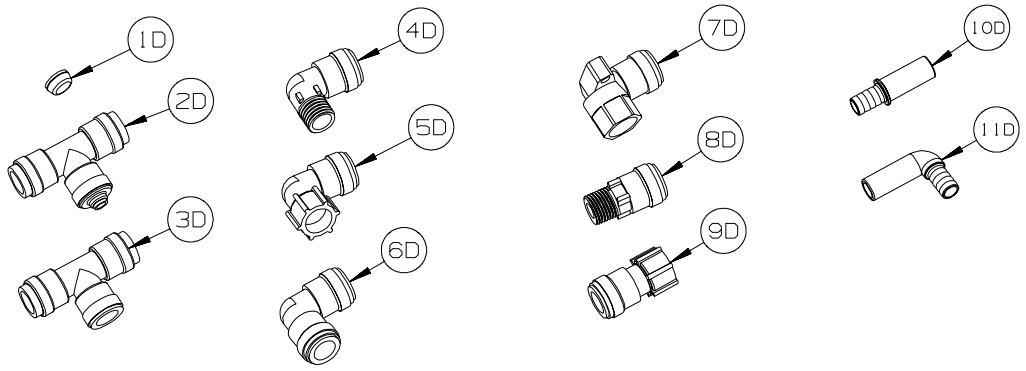

KEY	PART NUMBER	U/M	DESCRIPTION
1D	116473-01-000	EA	FERRIL - RUBBER SEALING - WATER LINE
2D	160949-01-000	EA	CONNECTOR - 1/2" X 1/2" X 1/4" REDUCER
3D	160949-02-000	EA	CONNECTOR - 1/2"CTS X 1/2"CTS X 1/2"CTS
4D	164906-01-000	EA	ELBOW - 90 DEGREE - 1/2" QUICK CONNECT X 1/2"MPT
5D	164906-02-000	EA	ELBOW - 90 DEGREE - 1/2" QUICK CONNECT X 1/2"FPT - SWIVEL
6D	164906-03-000	EA	ELBOW - 90 DEGREE - 1/2" X 1/2" QUICK CONNECTS
7D	164906-04-000	EA	ELBOW - 90 DEGREE - 1/2"CTS X 1/2"FPT
8D	164907-01-000	EA	ADAPTER - STRAIGHT - 1/2" QUICK CONNECT X 1/2"MPT
9D	164907-02-000	EA	ADAPTER - STRAIGHT - 1/2" QUICK CONNECT X 1/2"FPT/SWIVEL
10D	166212-01-000	EA	UNION - HOSE/BARB - CTS X 1/2"B - SEA TECH #3511-1008
11D	166212-02-000	EA	ELBOW - HOSE/BARB - CTS X 1/2"B - SEA TECH #3512-1008

COPYRIGHT © 2009 WINNEBAGO INDUSTRIES INC.

WATER & SEWAGE GROUP (CONTINUED)

WATER SYSTEM (CONTINUED)

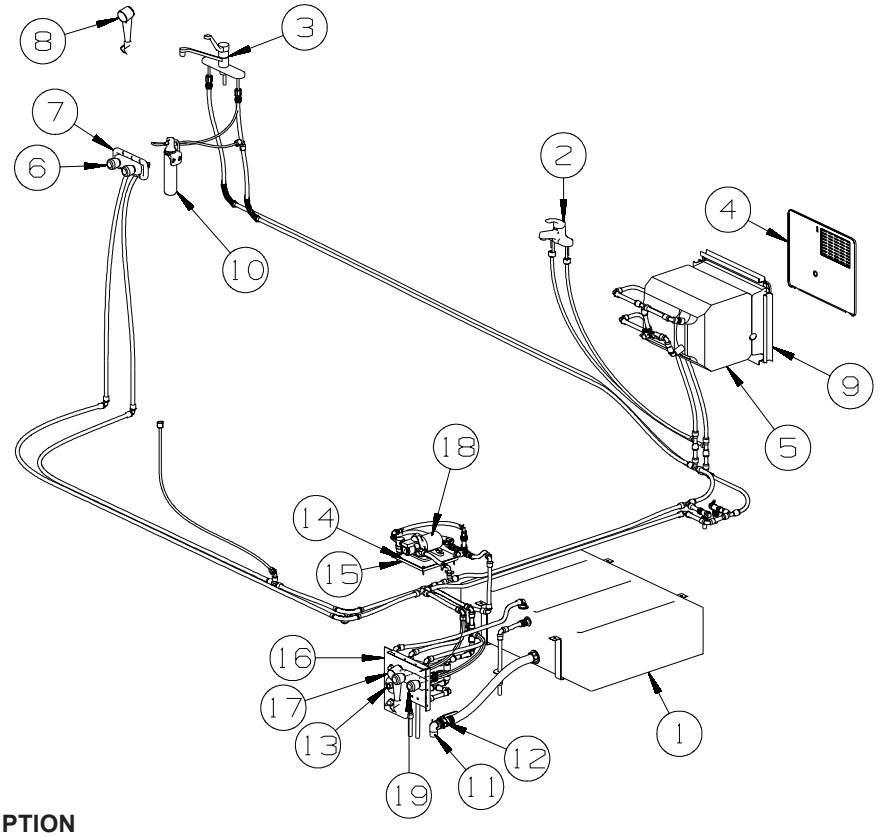

KEY	PART NUMBER	U/M	DESCRIPTION
1	166160-02-000	EA	TANK - WATER - 30 GALLON - W/FITTINGS
			FROM: 00-00-00 THRU: 07-13-08
1	169713-02-000	EA	TANK - WATER - 32 GALLON - W/FITTINGS
			FROM: 07-14-08 THRU: 99-99-99
	042989-03-000	EA	FITTING - SPINWELD - 1 1/4"NPT - PLASTIC
	042989-05-000	EA	FITTING - SPINWELD - 1/2"FPT - PLASTIC
	049032-01-000	EA	PATCH - SPINWELD - 1"ID - 1.9"OD - PLASTIC
2*	165730-01-01A	EA	FAUCET - LAVATORY - SINGLE CONTROL - CHROME
3	149164-01-01A	EA	FAUCET - GALLEY - SINGLE CONTROL - CHROME
4*	125420-06-02A	EA	DOOR - WATER HEATER - 18" X 14.6" - BRIGHT WHITE
4*	125420-06-03A	EA	DOOR - WATER HEATER - 18" X 14.6" - BLACK
	076767-03-000	EA	CABLE - STAINLESS STEEL - 18.5"
5*	051391-03-000	EA	WATER HEATER G6A-8E ELECTRONIC IGNITION
5*	145541-02-000	EA	WATER HEATER-6 GAL-GAS/ELEC/120'-REM IGN-W/HEAT EXC-4E - 53B
6	163269-01-02A	EA	FAUCET/SHOWER -.5"MPT W/1.9" INLET PIPES - CHROME
7	167738-02-01A	EA	PANEL - SHOWER FAUCET - SOFT WHITE
8*	129390-04-01A	EA	SHOWER HEAD - W/HOSE & BRACKET - WHITE
9	152239-01-01A	EA	FLANGE/MOUNTING/RECESSED - 19.3" X 15.8" - BRIGHT WHITE
9	152239-01-02A	EA	FLANGE/MOUNTING/RECESSED - 19.3" X 15.8" - BLACK
10	160946-03-000	EA	FILTER SYSTEM - WATER PURIFICATION - W/FILTER MDL “A1” - 29B
11	132484-01-000	EA	ELBOW - 90 DEGREE - 1MPT X 1FPT - PLASTIC
12	132483-01-000	EA	VALVE/BALL - 1" - THREADED ENDS
13	010230-06-000	EA	FILL - CITY WATER - W/CHECK VALVE - MPT - BRUSHED ALUM - 64R
14	149477-02-02B	EA	PANEL - WATER PUMP - E-COATED
15	140364-01-01A	EA	FOAM - PAD - .5" X 8" X 8"
16	166877-01-12B	EA	PANEL - SERVICE CENTER - BRIGHT WHITE - 64R
17	131383-01-02A	EA	SHOWER HEAD - W/60" HOSE & BRACKET - WHITE - 64R
18	160702-01-000	EA	PUMP - WATER - 2.8 GPM/45 PSI - W/1/2" MPT - #2088-422-174
			FROM: 00-00-00 THRU: 05-28-08
18	160702-02-000	EA	PUMP - WATER - 2.8 GPM/55 PSI - 12 VOLT - #2088-422-175
			FROM: 05-29-08 THRU: 99-99-99
19	163269-01-01A	EA	FAUCET/SHOWER -.5"MPT W/1.9" INLET PIPES - BRIGHT WHITE - 64R

***COMPONENT PARTS LISTED LATER IN THIS GROUP**

COPYRIGHT © 2009 WINNEBAGO INDUSTRIES INC.

WATER & SEWAGE GROUP (CONTINUED)

COMPONENT PARTS FOR WATER SYSTEM

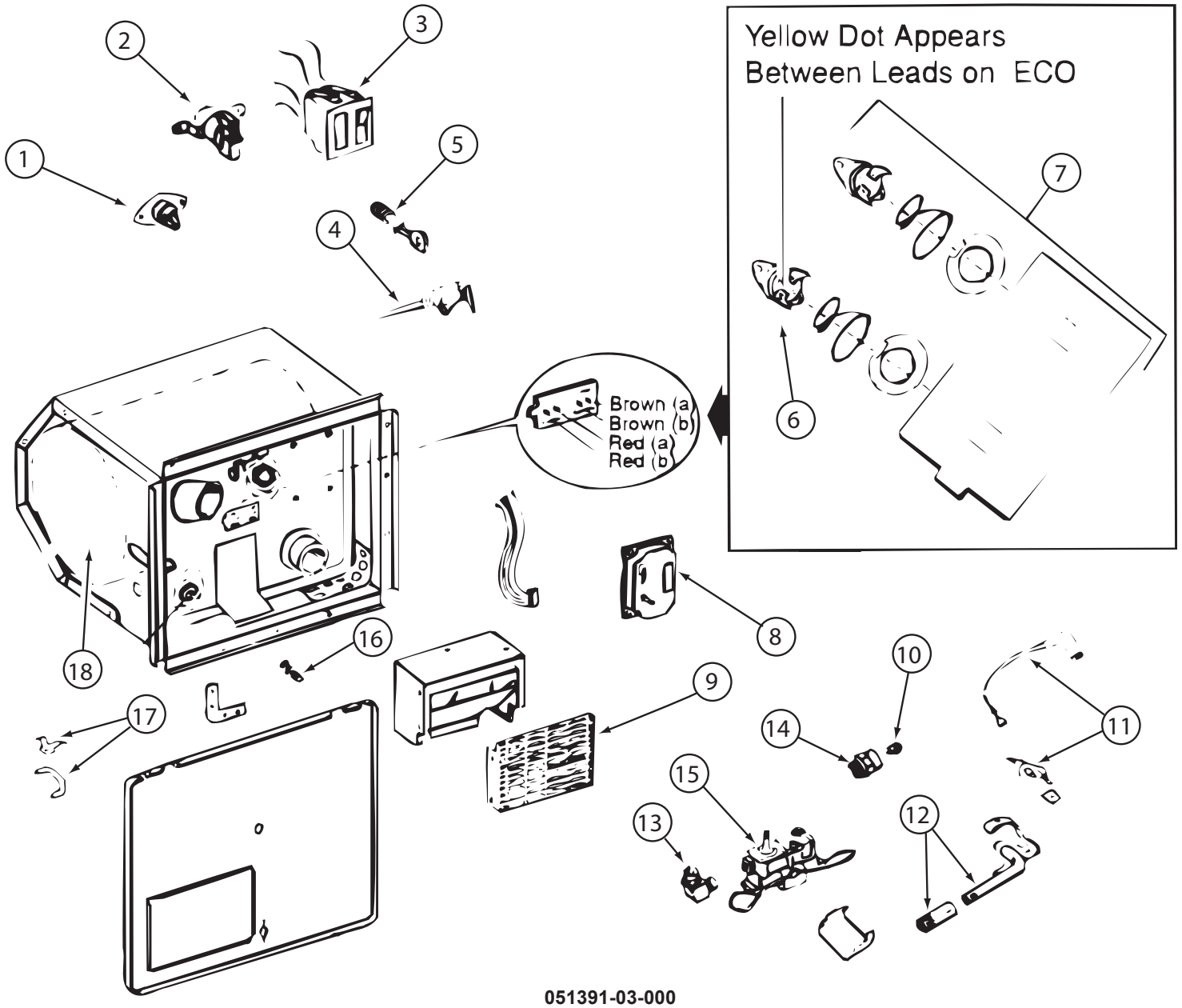

051391-03-000

KEY	PART NUMBER	U/M	DESCRIPTION	VENDOR NO.
3	051393-01-701	EA	SWITCH - REMOTE - W/LIGHT	91959
4	051391-01-704	EA	VALVE-RELIEF, 1/2" FITTING	91604
4	051391-03-701	EA	VALVE-RELIEF - 3/4" FITTING	90028
5	051391-01-705	EA	FASTENER-CAMLOCK	92609
6	051391-04-701	EA	THERMOSTAT 12V DC-120 PRESET	91470
7	051393-01-721	EA	THERMOSTAT W/ECO, 140 FRT MT	91447
9	051391-04-707	EA	KIT-EXHAUST, (FLUE & GASKET)	90960
10	051391-01-710	EA	ORIFICE-MAIN BURNER	92742
12	051391-04-703	EA	BURNER-MAIN/ELECTRONIC IG	91638
13	051391-01-714	EA	FITTING-ELBOW 45,3/8F X 3/8	MPT 1044
14	051391-03-700	EA	HOLDER-ORIFICE	91563
16	051391-01-715	EA	PLUG-DRAIN, 1 EA = 2 PER PKG	91857
17	051391-01-700	EA	HINGE KIT, (PIN & CLIP)	92568&92559
18	051391-04-706	EA	TANK-G6A-4E/6E/7E/8E-FRT.MT	91641 - INNER
	051391-01-717	EA	GRILLE-WATER HEATER DOOR	92640
	051393-01-723	EA	SWITCH - THERMAL CUTOUT 2/PK	93866 WAS 93853
	051393-01-724	EA	BOARD-CIRCUIT,SPADE TERMINAL	93865
	051393-01-725	EA	ELECTRODE-SGL SPADE CONNECT.	93868
	051393-01-726	EA	VALVE/SOLENOID - W/O BRACKET	93870
	111129-01-711	EA	BRACKET-CORNER, SET OF FOUR	91928

CONTACT WINNEBAGO PARTS SALES FOR UNLISTED COMPONENT(S)

COPYRIGHT © 2009 WINNEBAGO INDUSTRIES INC.

WATER & SEWAGE GROUP (CONTINUED)

COMPONENT PARTS FOR WATER SYSTEM (CONTINUED)

125420-01-03A, 125420-03-03A, 125420-04-03A, 125420-05-03A, 125420-06-02A/03A/04A,

KEY	PART NUMBER	U/M	DESCRIPTION	VENDOR NO.
	051391-01-705	EA	FASTENER - CAMLOCK	92609

129390-04-01A

KEY	PART NUMBER	U/M	DESCRIPTION	VENDOR NO.
	129390-04-700	EA	CONNECTOR-SWIVEL - WHITE	A-4002PK

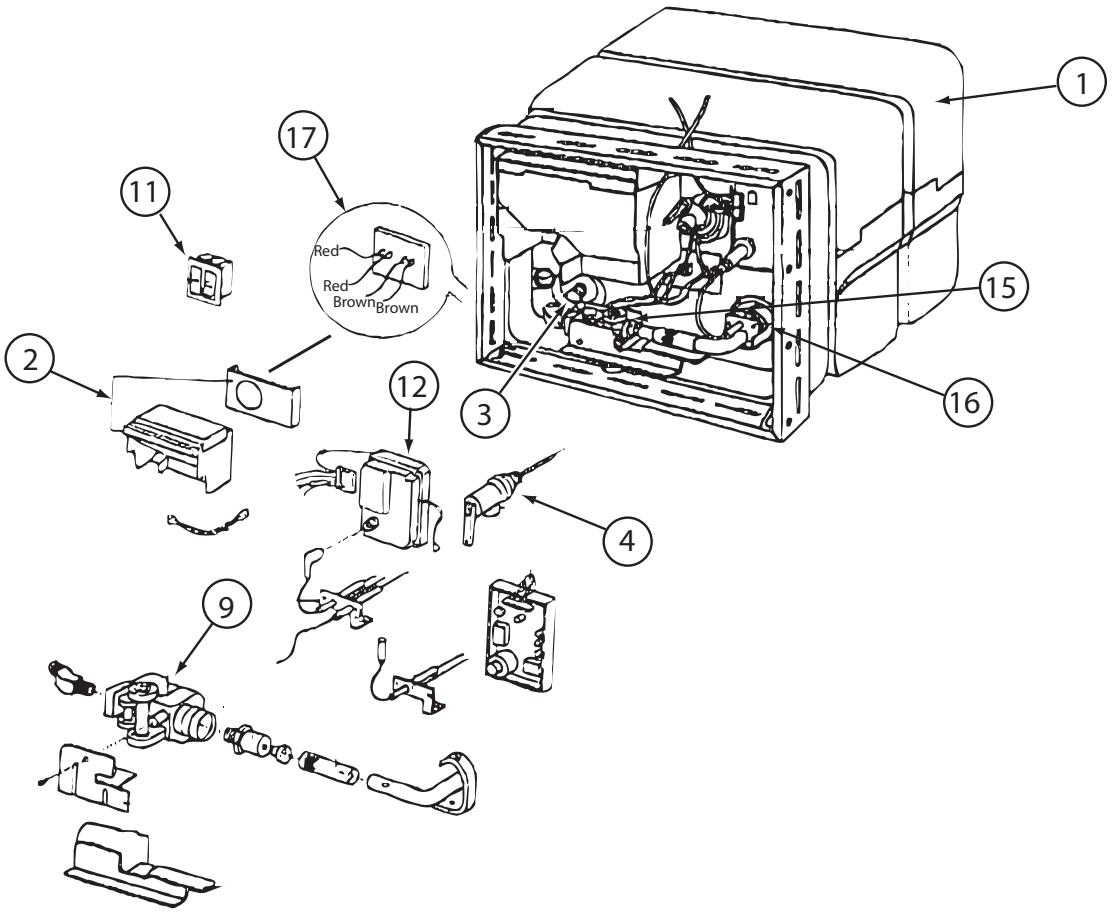

145541-02-000

KEY	PART NUMBER	U/M	DESCRIPTION	VENDOR NO.
1	145541-02-700	EA	TANK/SERVICE KIT PCS- 6 GAL	91053
2	051391-04-707	EA	KIT-EXHAUST, (FLUE & GASKET)	90960
3	051391-01-715	EA	PLUG-DRAIN, 1 EA = 2 PER PKG	91857
4	051391-01-704	EA	VALVE-RELIEF, 1/2" FITTING	91604
4	051391-03-701	EA	VALVE-RELIEF - 3/4" FITTING	90028
9	051393-01-726	EA	VALVE-SOLENOID - W/O BRACKET	93870
11	051393-01-701	EA	SWITCH - REMOTE - W/LIGHT	91959
11	145541-01-701	EA	SWITCH - ON/OFF - WHITE	91859
12	145541-01-702	EA	CIRCUIT BOARD	91226
15	145541-01-703	EA	SWITCH - THERMAL CUT OFF	93866
16	051393-01-725	EA	ELECTRODE-SGL SPADE CONNECT.	93868
17	051393-01-721	EA	THERMOSTAT W/ECO, 140 FRT MT	91447
	051391-05-706	EA	ELEMENT-HEATING 1500 WATT	92249 W/GASKET
	145541-01-704	EA	RELAY	90061
	145541-02-701	EA	JUNCTION BOX(PLASTIC) 6 GAL	91222
			CONTACT WINNEBAGO PARTS SALES FOR UNLISTED COMPONENT(S)	

165730-01-01A, 165730-02-01A

KEY	PART NUMBER	U/M	DESCRIPTION	VENDOR NO.
	165730-02-700	EA	CARTRIDGE	CFG-40002

COPYRIGHT © 2009 WINNEBAGO INDUSTRIES INC.

WINDOW & VENTS GROUP

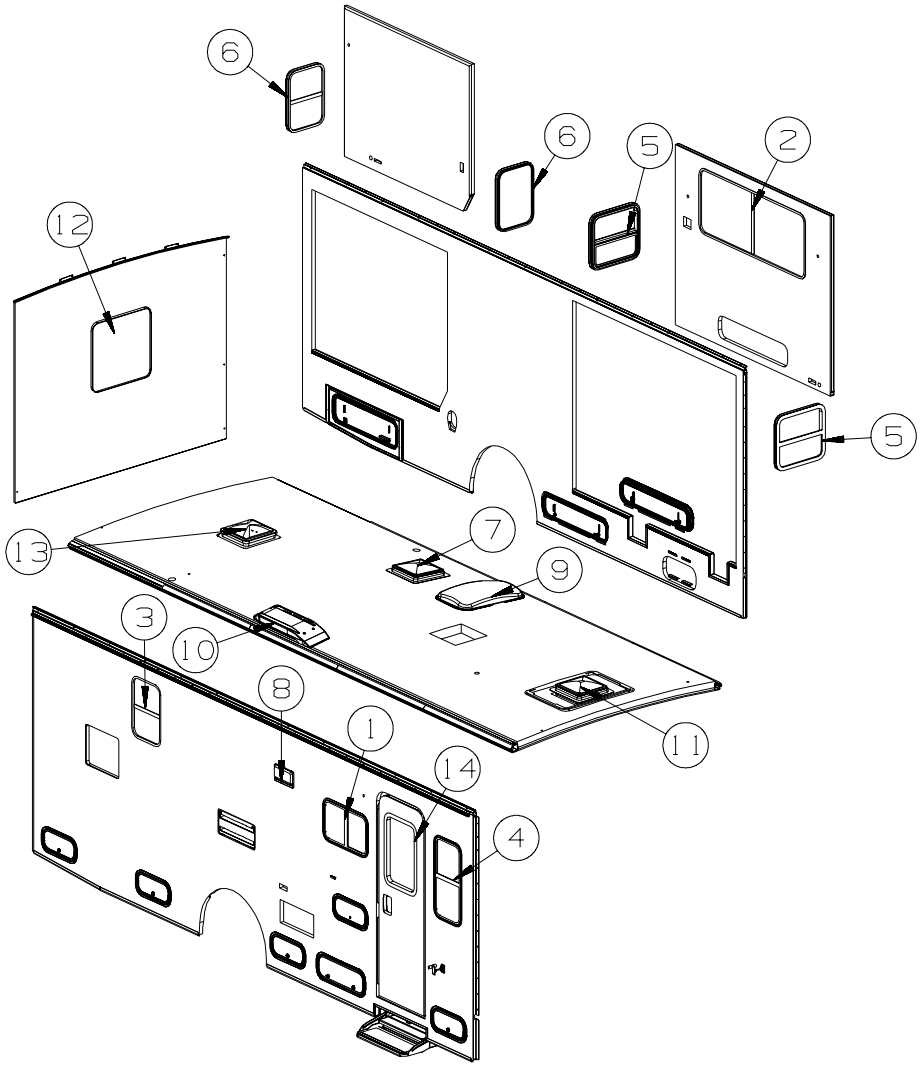

KEY	PART NUMBER	U/M	DESCRIPTION
1*	164922-01-01A	EA	WINDOW - HORIZ SLIDER/RH - 15"H X 23.7"W - BLK/BLK
1	173186-01-01A	EA	WINDOW ASM-SLD,HRZ,RH,BLK/BK,*SEGI - 094
1*	150648-08-01A	EA	WINDOW-HORIZ SLIDER/FLUSH/THERMO/RH - 15.2" X 24"-BLK/BLK - 13Y
1	173185-07-01A	EA	WINDOW - HORIZ SLIDE/THERMO/RH - 15.2" X 24" - 13Y/094
2*	164922-24-01A	EA	WINDOW - HORIZ SLIDER/LH - 23.6"H X 57.4"W - CLR/BLK/BLK
2	173186-08-01A	EA	WINDOW ASM-SLD,HRZ,LH,BLK/BK,*SEGI - 094
2*	150648-07-01A	EA	WINDOW-HORIZ SLIDER/FLUSH/THERMO/LH - 23.8"X 57.7"-BLK/BLK - 13Y
2	173185-06-01A	EA	WINDOW - HORIZ SLIDE/THERMO/LH - 23.8" X 57.7" - 13Y/094
3*	164973-01-01A	EA	WINDOW - RAISED SLIDER - 22.2"H X 15.2"W - BLK/BLK
3	173188-01-01A	EA	WINDOW ASM-SLIDER VT,BLK/BLK,*SEGI - 094
3*	150649-15-01A	EA	WINDOW - VERT SLIDER/FLUSH/THERMO - 22.2" X 15.2"-BLK/BLK - 13Y
3	173187-08-01A	EA	WINDOW ASM-SLD,VERT,THM.BLK ,*SEGI - 13Y/094
4*	164973-06-01A	EA	WINDOW - RAISED SLIDER - 30.2"H X 14.3"W - BLK/BLK
4	173188-02-01A	EA	WINDOW ASM-SLIDER,VT,BLK/BLK,*SEGI - 094
4*	150649-01-01A	EA	WINDOW - VERT SLIDER/FLUSH/THERMO - 30.9" X 14.2"-BLK/BLK - 13Y
4	173187-01-01A	EA	WINDOW - VERT SLIDE/THERMO - 30.2" X 14.2" - BLK/BLK - 13Y/094
5*	164973-08-01A	EA	WINDOW - RAISED SLIDER - 19.9"H X 20.8"W - BLK/BLK
5	173188-04-01A	EA	WINDOW ASM-SLIDER,VT,BLK/BLK,*SEGI - 094
5*	150649-07-01A	EA	WINDOW - VERT SLIDER/FLUSH/THERMO - 19.8" X 20.8" - 13Y
5	173187-03-01A	EA	WINDOW ASM-SLD,VERT,THM.BLK ,*SEGI - 13Y/094
5	151905-01-01A	EA	CLIP/BRACKET - SCREEN RETAINER - BLACK
6*	164973-16-01A	EA	WINDOW - RAISED SLIDER - 22.2"H X 15.2"W - BLK/BLK
6	151905-01-01A	EA	CLIP/BRACKET - SCREEN RETAINER - BLACK
6	173188-08-01A	EA	WINDOW ASM-SLIDER,VT,BLK/BLK,*SEGI - 094
6*	150649-32-01A	EA	WINDOW - VERT SLIDER/FLUSH/THERMO - 22.2" X 15.2"-BLK/BLK - 13Y
6	173187-16-01A	EA	WINDOW ASM-SLD,VER,THM,BLK ,*SEGI - 13Y/094

COPYRIGHT © 2009 WINNEBAGO INDUSTRIES INC.

WINDOW & VENTS GROUP (CONTINUED)

WINDOW & VENT LAYOUT (CONTINUED)

KEY	PART NUMBER	U/M	DESCRIPTION
7*	122882-02-01A	EA	VENT - ROOF - W/FAN - W/O INSIDE GARNISH - UL
	009440-01-000	EA	GEAR/ARM - LIFT - ROOF VENT COVER
	048648-01-000	EA	MOTOR/ROOF VENT - W/RESISTER - 1/8"SHAFT - 12VOLT
	048649-01-000	EA	FAN BLADE - ROOF VENT - 6 BLADED - 6"RADIUS
7	122882-07-01A	EA	GARNISH - ROOF VENT - 2.5" TO 4.1"
7*	122882-03-01A	EA	VENT - ROOF - W/FAN - W/O INSIDE GARNISH - CSA - 265
8	147821-01-01A	EA	VENT - EXHAUST/RANGE HOOD - BRIGHT WHITE
8	147821-02-01A	EA	SHROUD - EXHAUST VENT/RANGE HOOD - BRIGHT WHITE
8	147821-01-02A	EA	VENT - EXHAUST/RANGE HOOD - BLACK
8	147821-02-01A	EA	SHROUD - EXHAUST VENT/RANGE HOOD - BRIGHT WHITE
9	122193-01-02A	EA	PANEL - SKYLITE - INNER - W/LIGHT INDENTATION
9	138372-01-02B	EA	TRIM - CORNER - SKYLIGHT - E-COATED
9	138379-02-01A	EA	PANEL/SKYLIGHT OTR - RECT/4"H CTR DOME - 18.4"X 29.5"- WHT
10	149508-01-02A	EA	CAP - ROOF/REFRIGERATOR VENT - WHITE
10	149508-01-03A	EA	CAP - ROOF/REFRIGERATOR VENT - BLACK
10	149508-02-02A	EA	BASE - ROOF/REFRIGERATOR VENT - BRIGHT WHITE
10	149508-02-01A	EA	BASE - ROOF/REFRIGERATOR VENT - BLACK
11*	122882-01-01A	EA	VENT - ROOF - NONPOWERED - W/O INSIDE GARNISH
	009440-01-000	EA	GEAR/ARM - LIFT - ROOF VENT COVER
11	122882-07-01A	EA	GARNISH - ROOF VENT - 2.5" TO 4.1"
11*	152882-01-01A	EA	SKYLIGHT/WINDOW DOME - 19.7" X 27.5" CUTOUT SIZE-OFF WHITE - 313
11	166916-02-Y37	EA	ADAPTER/SKYLIGHT - FIBERGLASS - 313
11	166917-01-01A	EA	COVER/SKYLIGHT - INTERIOR - TAN - 313
12*	151075-02-01A	EA	WINDOW - ESCAPE/PICTURE - 26.3" X 26.7" - BLK/BLK
12	173184-01-01A	EA	WINDOW - STATIONARY/EGRESS - 26.3" X 26.7" - 094
12*	150651-04-01A	EA	WINDOW - STATIONARY/FLS/ESCAPE/THERMO-26.3"X 26.2"-BLK/BLK - 13Y
12	173183-02-01A	EA	WINDOW - STATIONARY/THERMO/EGRESS - 26.3" X 26.7" - 13Y/094
13*	122882-01-01A	EA	VENT - ROOF - NONPOWERED - W/O INSIDE GARNISH
	009440-01-000	EA	GEAR/ARM - LIFT - ROOF VENT COVER
13	122882-07-01A	EA	GARNISH - ROOF VENT - 2.5" TO 4.1"
13*	123780-26-01A	EA	FANTASTIC VENT-4"ROOF- W/FAN/DBL DOME-W/O THERM/PWR LIFT - 41B
14	117053-02-F36	EA	WINDOW - PICTURE - W/O TRIM - 60% TINTING - 26.4" X 17"
14*	150651-01-01A	EA	WINDOW - STATIONARY/FLUSH/THERMO - 26.3" X 17" - BLK/BLK - 13Y
	002181-25-000	EA	GLASS - PICTURE WINDOW - 25.8"W X 16.4"H
	087561-01-000	FT	SEAL - GLASS - EXTERIOR - .5" WIDE - VINYL BLACK
14	117054-02-03A	EA	TRIM/RETAINER - INSIDE - 16.9" X 26.2" - BLACK
14	173183-01-01A	EA	WINDOW - STATIONARY/THERMO - 26.3" X 17" - 13Y/094

***COMPONENT PARTS LISTED LATER IN THIS GROUP**

COPYRIGHT © 2009 WINNEBAGO INDUSTRIES INC.

WINDOW & VENTS GROUP (CONTINUED)

COMPONENT PARTS FOR WINDOW & VENT LAYOUT

122882-01-01A

KEY	PART NUMBER	U/M	DESCRIPTION	VENDOR NO.
	064470-01-700	EA	COVER - VENT	J7291
	064470-01-701	EA	SLIDE BAR - VENT LID	JRP1291B
	122882-01-700	EA	HANDLE - CRANK - BLACK	90128
	122882-01-701	EA	SCREEN	JRP-1124-B
	122882-01-702	EA	HANDLE - CRANK - WHITE	JRP1031B
	122882-01-703	EA	SEAL - DOME - 48"	JRP2111B

122882-02-01A, 122882-03-01A

KEY	PART NUMBER	U/M	DESCRIPTION	VENDOR NO.
	064470-01-700	EA	COVER - VENT	J7291
	064470-01-701	EA	SLIDE BAR - VENT LID	JRP1291B
	110051-03-700	EA	SWITCH-BLACK/PUSH BUTTON	27-0164
	122882-01-700	EA	HANDLE - CRANK - BLACK	90128
	122882-01-701	EA	SCREEN	JRP-1124-B
	122882-01-702	EA	HANDLE - CRANK - WHITE	JRP1031B

COPYRIGHT © 2009 WINNEBAGO INDUSTRIES INC.

WINDOW & VENTS GROUP (CONTINUED)

COMPONENT PARTS FOR WINDOW & VENT LAYOUT (CONTINUED)

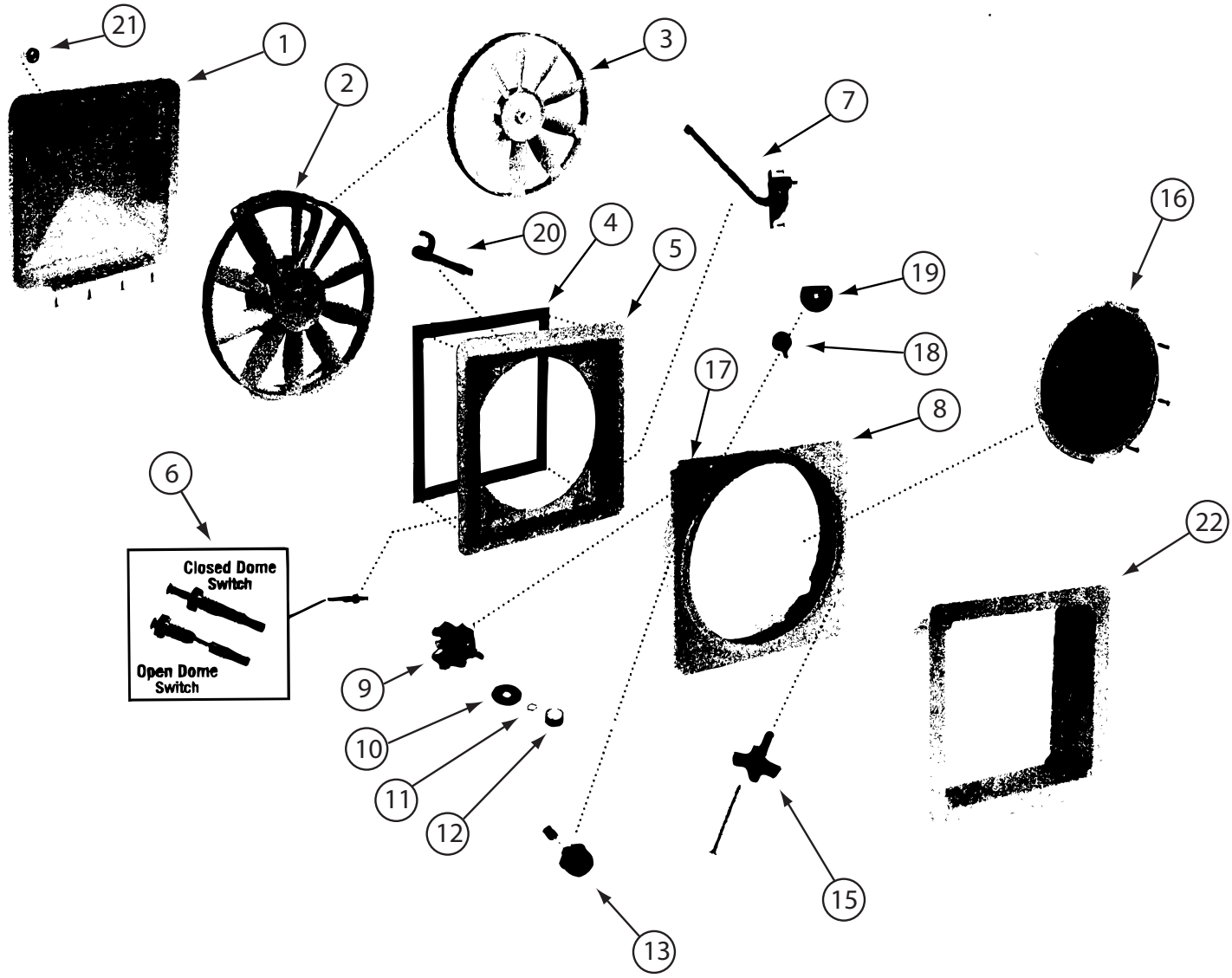

123780-26-01A

KEY	PART NUMBER	U/M	DESCRIPTION	VENDOR NO.
1	123780-22-700	EA	COVER - VENT W/HINGE & SLIDE	K8020-81
2	123780-26-700	EA	MOTOR & FAN BLADE W/BRACKET	XK8017-03 PANCAKE
3	123780-26-701	EA	BLADE/FAN - 12" OPAQUE WHT	8138-81 - 7MM
4	123780-22-701	EA	SEAL/RUBBER-4 1/2' W/GLUE	K1144-09
5	123780-22-702	EA	BASE/MAIN - W/LOCK/SEAL/ARM	XK8010-81 CLAMP STY
6	084079-01-707	EA	SWITCH - SAFETY	1122-05
7	084079-01-702	EA	ARM LIFT ASSEMBLY, MANUAL	101105
9	084079-01-709	EA	SWITCH - MAIN - 3 SPEED	1031-05
13	123780-21-700	EA	FUSE HOLDER W/4AMP FUSE/KNOB	K9018-09 NEW STYLE
15	123780-16-700	EA	KNOB-BLK/AUTOMATIC LIFT MTR	K1140-09
16	123780-21-703	EA	SCREEN - POP N LOCK	2035-81
17	123780-22-704	EA	TRAVEL LOCK ASSEMBLY	4021-09
22	123780-22-705	EA	GARNISH-3 1/2"CLAMP STY-WHT	XK2040-81

CONTACT WINNEBAGO PART SALES FOR UNLISTED COMPONENT(S)

COPYRIGHT © 2009 WINNEBAGO INDUSTRIES INC.

WINDOW & VENTS GROUP (CONTINUED)

COMPONENT PARTS FOR WINDOW & VENT LAYOUT (CONTINUED)

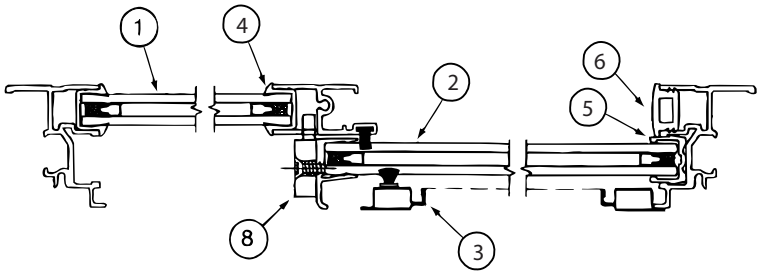

CROSS SECTION B-B

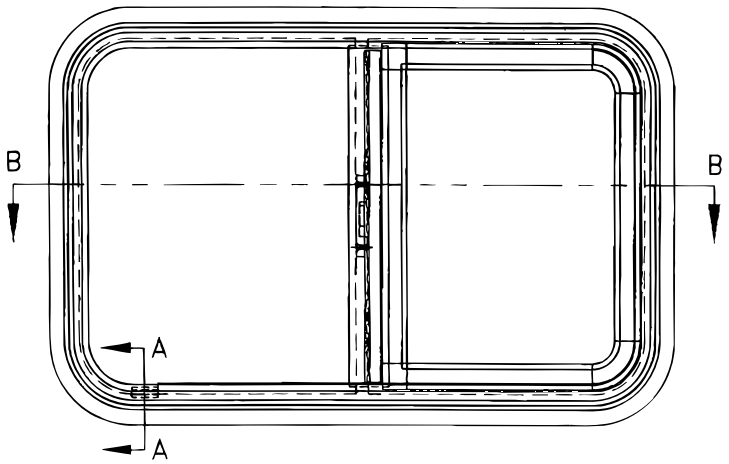

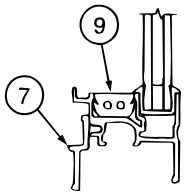

CROSS SECTION
A-A

150648-07-01A, 150648-22-01A

KEY	PART NUMBER	U/M	DESCRIPTION	VENDOR NO
1	150648-07-701	EA	GLASS - STATIONARY	390-028314
2	150648-07-700	EA	GLASS-SLIDING W/SASH & LATCH	FH3000G8
3	150648-01-702	EA	SCREEN ASM	410-031156
4	112795-01-705	FT	VINYL - GLAZING	132-027331
5	151069-01-700	FT	CHANNEL-RUN, SLIDING	122-030627
6	150648-01-703	FT	PLUG - FILLER	132-030308
7	150648-01-707	EA	RETAINER - TRIM	H493-67
8	150648-01-700	EA	LATCH-HORIZONTAL SLIDE-BLK	FH3000-CK
8	150648-01-701	EA	LATCH-HORIZONTAL SLIDE-RED	FH3003-CK
9	150648-01-704	EA	SLIDE STOP	132-030866
	150649-05-702	FT	FIN SEAL-F/LOCKING RAIL-BLK	171-062348

150648-08-01A, 150648-09-01A

KEY	PART NUMBER	U/M	DESCRIPTION	VENDOR NO
1	112795-78-700	EA	GLASS - STATIONARY	390-028338
2	150648-08-700	EA	GLASS-SLIDING W/SASH & LATCH	FH3015G8
3	150648-09-700	EA	SCREEN ASM	410-035336
4	112795-01-705	FT	VINYL - GLAZING	132-027331
5	151069-01-700	FT	CHANNEL-RUN, SLIDING	122-030627
6	150648-01-703	FT	PLUG - FILLER	132-030308
7	098674-06-704	EA	RETAINER - TRIM	B969-67
8	150648-01-700	EA	LATCH-HORIZONTAL SLIDE-BLK	FH3000-CK
8	150648-01-701	EA	LATCH-HORIZONTAL SLIDE-RED	FH3003-CK
9	150648-01-704	EA	SLIDE STOP	132-030866
	150649-05-702	FT	FIN SEAL-F/LOCKING RAIL-BLK	171-062348

COPYRIGHT © 2009 WINNEBAGO INDUSTRIES INC.

WINDOW & VENTS GROUP (CONTINUED)

COMPONENT PARTS FOR WINDOW & VENT LAYOUT (CONTINUED)

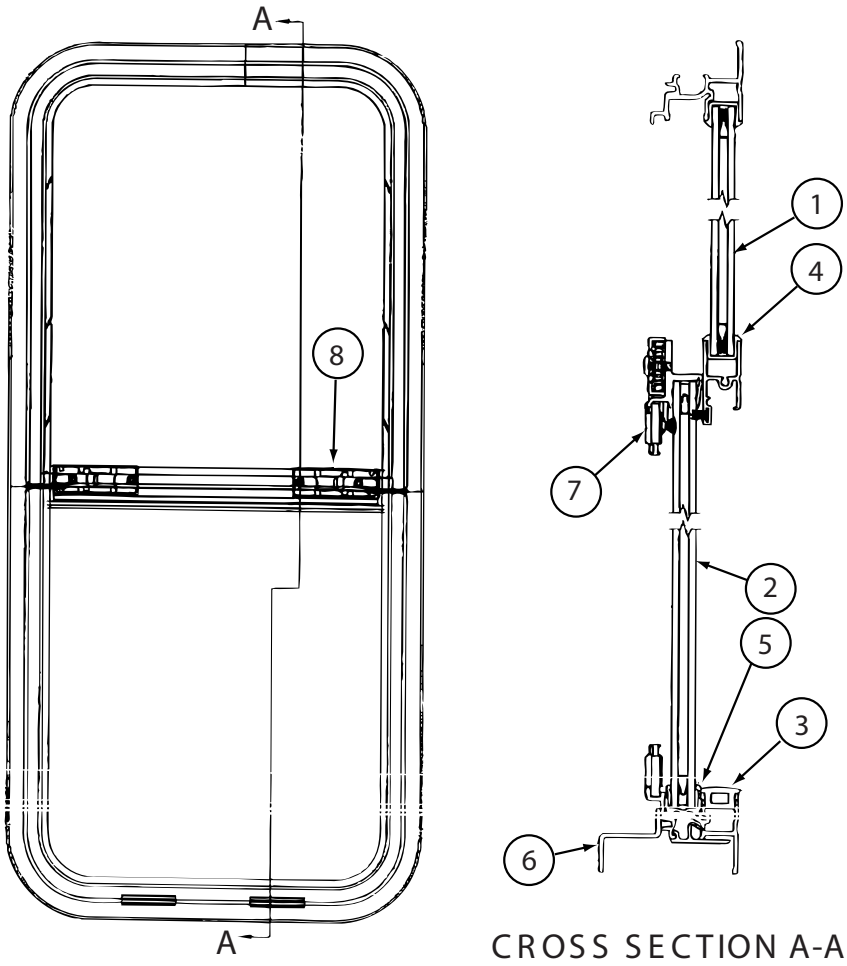

CROSS SECTION A-A

150649-01-01A/02A

KEY	PART NUMBER	U/M	DESCRIPTION	VENDOR NO
1	150649-01-705	EA	GLASS - STATIONARY	390028346
2	150649-01-704	EA	GLASS-SLIDING W/PULL & LATCH	FH3016G8
3	150648-01-703	FT	PLUG - FILLER	132-030308
4	112795-01-705	FT	VINYL - GLAZING	132-027331
5	151069-01-700	FT	CHANNEL-RUN, SLIDING	122-030627
6	150649-01-703	EA	RETAINER - TRIM	CH02-67
7	150649-01-702	EA	SCREEN ASM	410-035464
8	150649-01-700	EA	LATCH-VERTICLE SLIDE-BLK	FH3016-CK

150649-07-01A

KEY	PART NUMBER	U/M	DESCRIPTION	VENDOR NO
1	150649-07-700	EA	GLASS - STATIONARY	390-028662
2	150649-07-702	EA	GLASS-SLIDING W/PULL & LATCH	FH3052G8
3	150648-01-703	FT	PLUG - FILLER	132-030308
4	112795-01-705	FT	VINYL - GLAZING	132-027331
5	151069-01-700	FT	CHANNEL-RUN, SLIDING	122-030627
6	150649-07-703	EA	RETAINER - TRIM	H702-61
7	150649-07-701	EA	SCREEN ASM	410-035475
8	150649-01-700	EA	LATCH-VERTICLE SLIDE-BLK	FH3016-CK

150649-15-01A

KEY	PART NUMBER	U/M	DESCRIPTION	VENDOR NO
1	150649-15-701	EA	GLASS - STATIONARY	390-035768
2	150649-15-702	EA	GLASS-SLIDING W/PULL & LATCH	FH3069G8
3	150648-01-703	FT	PLUG - FILLER	132-030308
4	112795-01-705	FT	VINYL - GLAZING	132-027331
5	151069-01-700	FT	CHANNEL-RUN, SLIDING	122-030627
6	150649-15-703	EA	RETAINER - TRIM	H3069-67
7	150649-15-700	EA	SCREEN ASM	410-035769
8	150649-01-700	EA	LATCH-VERTICLE SLIDE-BLK	FH3016-CK

COPYRIGHT © 2009 WINNEBAGO INDUSTRIES INC.

WINDOW & VENTS GROUP (CONTINUED)

COMPONENT PARTS FOR WINDOW & VENT LAYOUT (CONTINUED)

150649-32-01A

KEY	PART NUMBER	U/M	DESCRIPTION	VENDOR NO
1	150649-32-701	EA	GLASS - STATIONARY	390035763
2	150649-15-702	EA	GLASS-SLIDING W/PULL & LATCH	FH3069G8
3	150648-01-703	EA	PLUG - FILLER	132-030308
4	112795-01-705	FT	VINYL-GLAZING	132-027331
5	151069-01-700	EA	CHANNEL-RUN, SLIDING	122-030627
6	150649-32-702	EA	RETAINER - TRIM - BLACK	H306961
7	150649-15-700	EA	SCREEN ASM	410-035769
8	150649-01-700	EA	LATCH KIT - F/VERTICAL SLIDE - BLACK	FH3016-CK

COPYRIGHT © 2009 WINNEBAGO INDUSTRIES INC.

WINDOW & VENTS GROUP (CONTINUED)

COMPONENT PARTS FOR WINDOW & VENT LAYOUT (CONTINUED)

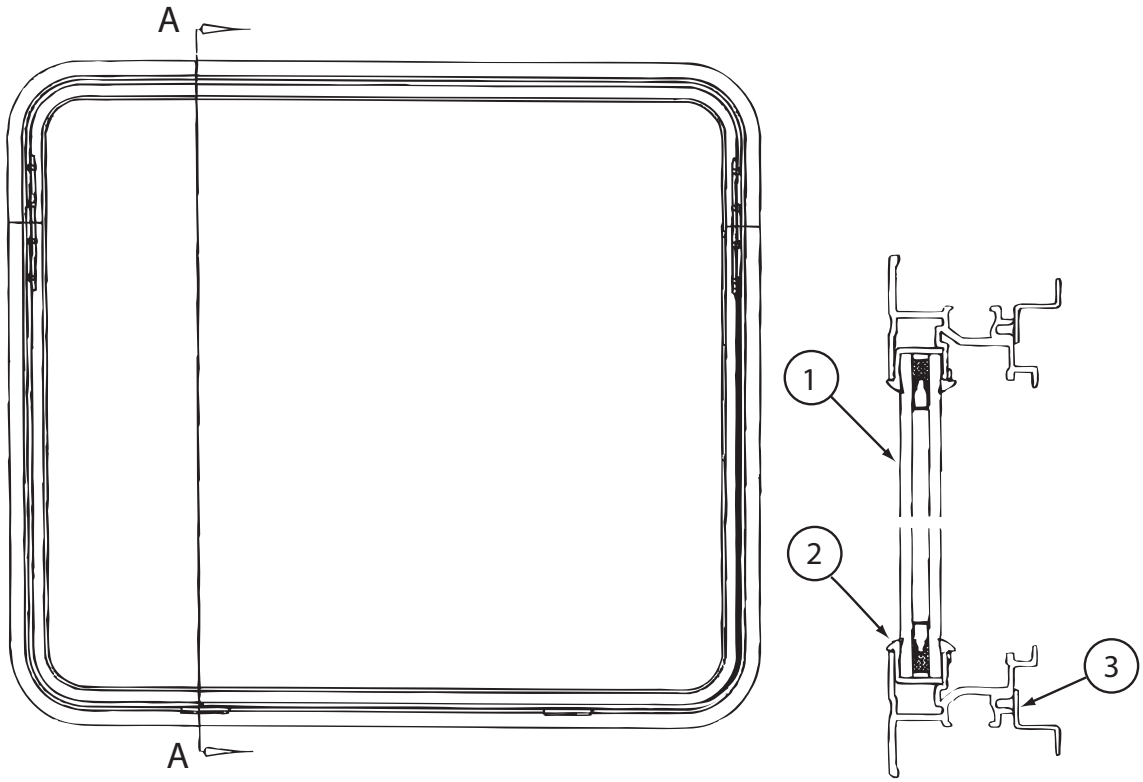

CROSS SECTION A-A

150651-01-01A/03A

KEY	PART NUMBER	U/M	DESCRIPTION	VENDOR NO
1	113733-10-700	EA	GLASS-STATIONARY	390-028306
2	112795-01-705	FT	VINYL - GLAZING	132-027331
3	150651-01-700	EA	RETAINER - TRIM	H416-67

COPYRIGHT © 2009 WINNEBAGO INDUSTRIES INC.

WINDOW & VENTS GROUP (CONTINUED)

COMPONENT PARTS FOR WINDOW & VENT LAYOUT (CONTINUED)

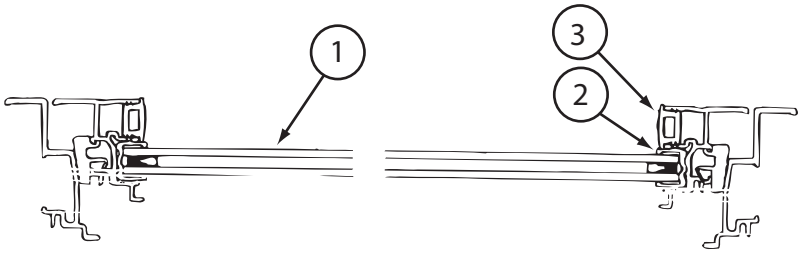

CROSS SECTION B-B

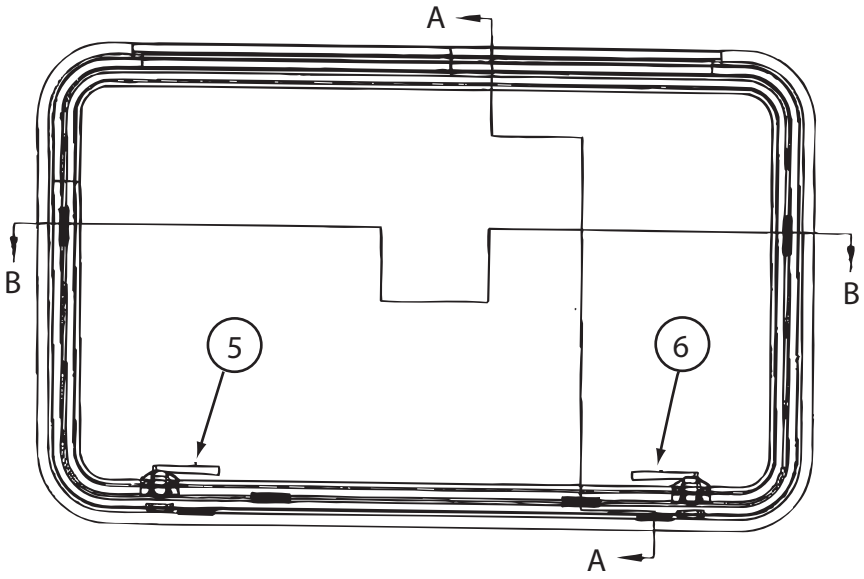

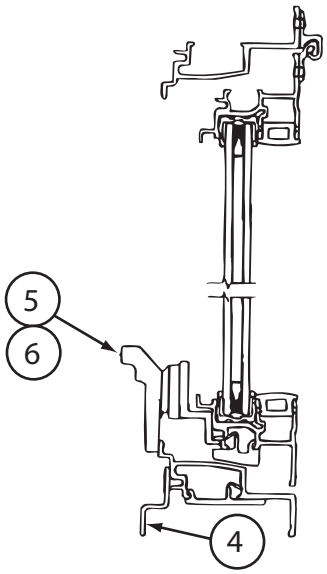

CROSS SECTION A-A

150651-04-01A/02A

KEY	PART NUMBER	U/M	DESCRIPTION	VENDOR NO
1	150651-04-700	EA	GLASS - STATIONARY	390-035630
2	112795-01-705	FT	VINYL - GLAZING	132-027331
3	150648-01-703	FT	PLUG - FILLER	132-030308
4	150651-04-701	EA	RETAINER - TRIM	FH3061-53
5	112898-06-704	EA	HANDLE/RH-(TIPOUT)ESCAPE-RED	182-011293
6	112898-06-705	EA	HANDLE-LH-(TIPOUT)ESCAPE-RED	182-011294

COPYRIGHT © 2009 WINNEBAGO INDUSTRIES INC.

WINDOW & VENTS GROUP (CONTINUED)

COMPONENT PARTS FOR WINDOW & VENT LAYOUT (CONTINUED)

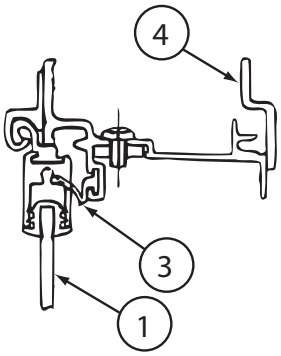

CROSS SECTION D-D

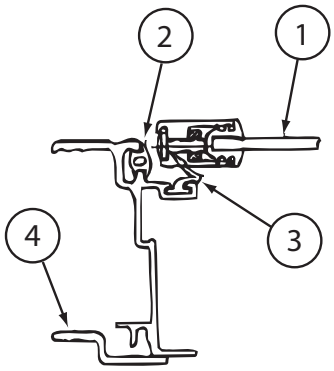

CROSS SECTION A-A

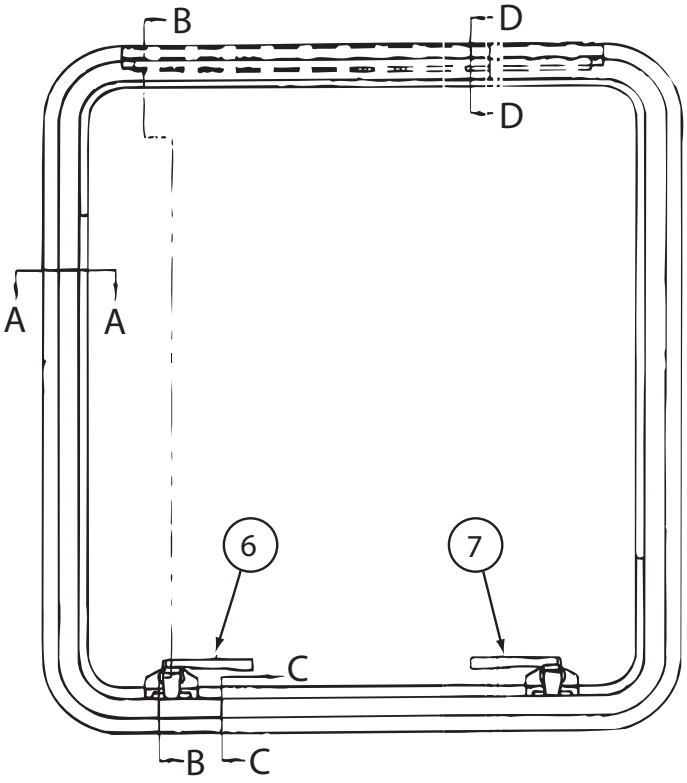

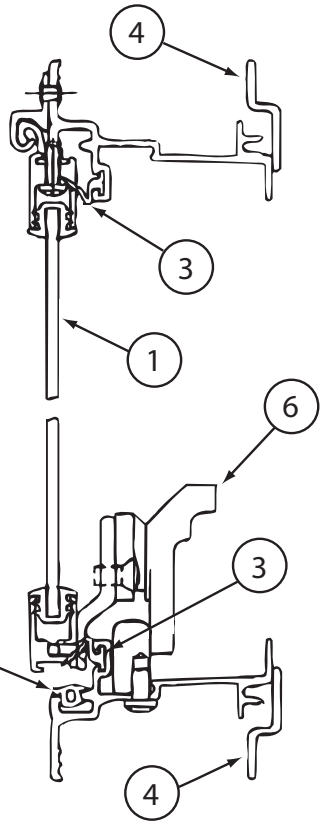

CROSS SECTION B-B

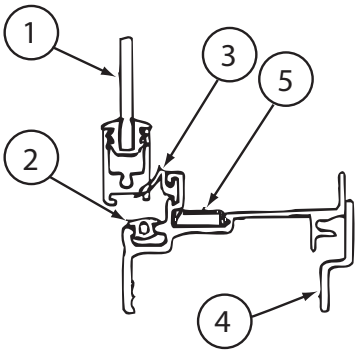

CROSS SECTION C-C

151075-02-01A

KEY	PART NUMBER	U/M	DESCRIPTION	VENDOR NO
1	151075-02-700	EA	GLASS-STATIONARY-SUB ASM	H955G9
2	116976-01-702	FT	FILLER PLUG	132-016065
3	100322-01-701	FT	SEAL-VENT	122-016071
4	151075-02-701	EA	RETAINER - TRIM	H955-53
5	108929-01-706	EA	COVER - DRAIN SLOT	132-016064
6	137867-05-707	EA	LOCK/CAM - LEFT	182-011294
7	137867-05-706	EA	LOCK/CAM - RIGHT	182-011293

COPYRIGHT © 2009 WINNEBAGO INDUSTRIES INC.

WINDOW & VENTS GROUP (CONTINUED)

COMPONENT PARTS FOR WINDOW & VENT LAYOUT (CONTINUED)

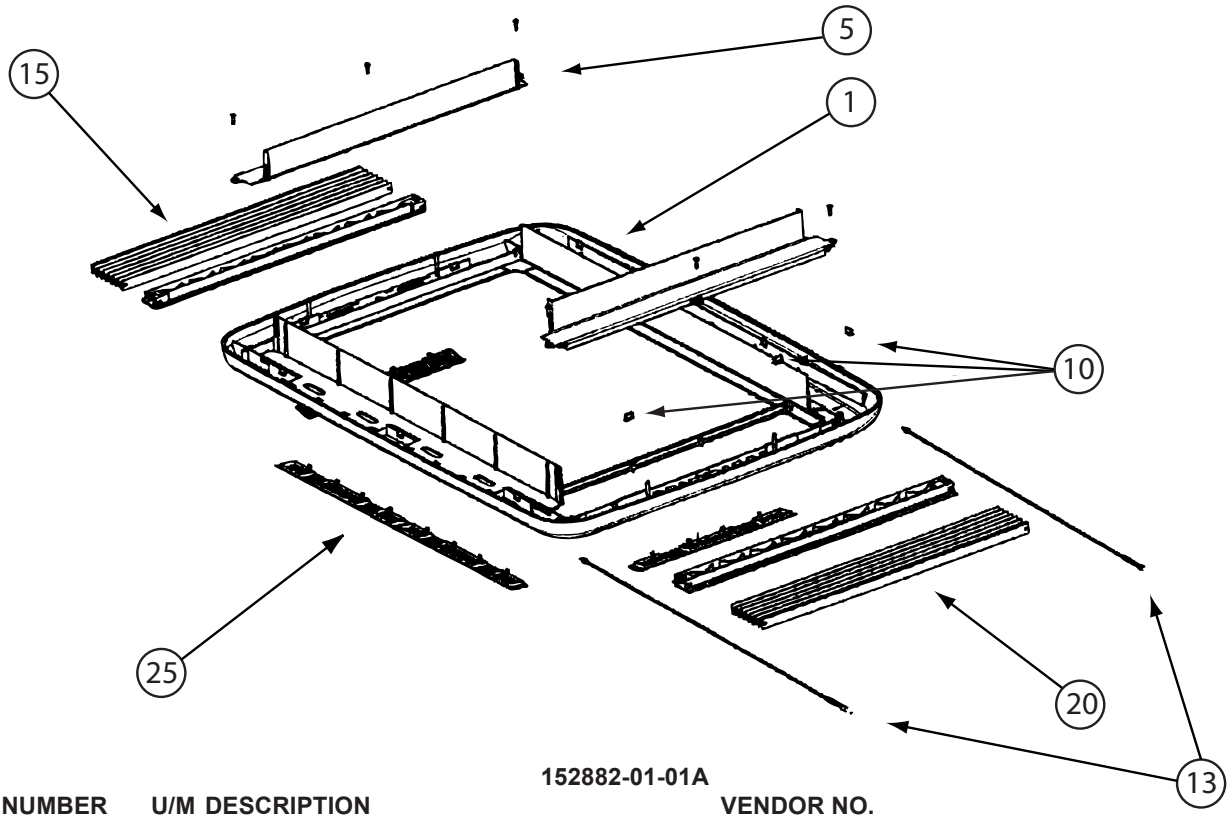

152882-01-01A

KEY	PART NUMBER	U/M	DESCRIPTION	VENDOR NO.
13	152882-01-703	EA	CORD	BG1715
15	152882-01-701	EA	FLY NET W/END ROD	BG1394
20	152882-01-702	EA	DARKENING SYSTEM W/END ROD	BG1393
25	152882-01-704	EA	VENTILATION GRIDS	560E35

COPYRIGHT © 2009 WINNEBAGO INDUSTRIES INC.

WINDOW & VENTS GROUP (CONTINUED)

COMPONENT PARTS FOR WINDOW & VENT LAYOUT (CONTINUED)

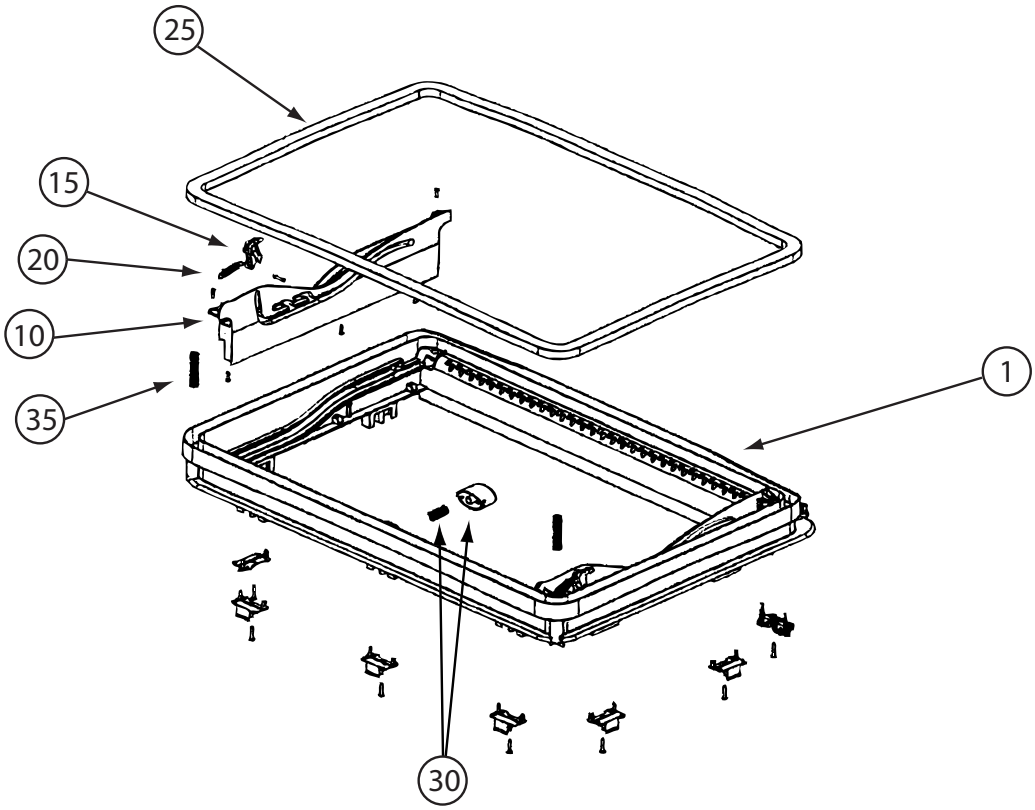

152882-01-01A (CONTINUED)

KEY	PART NUMBER	U/M	DESCRIPTION	VENDOR NO.
15	152882-01-710	EA	HOOK W/ASM.PARTS(1 EA=PKG 2)	BG1519 (LT/RT)
20	152882-01-711	EA	SPRING (1 EA = PKG 2)	BG1520 (LT/RT)
25	152882-01-705	EA	SEAL	BG1521
30	152882-01-706	EA	BUTTON W/SPRING	BG1522

COPYRIGHT © 2009 WINNEBAGO INDUSTRIES INC.

WINDOW & VENTS GROUP (CONTINUED)

COMPONENT PARTS FOR WINDOW & VENT LAYOUT (CONTINUED)

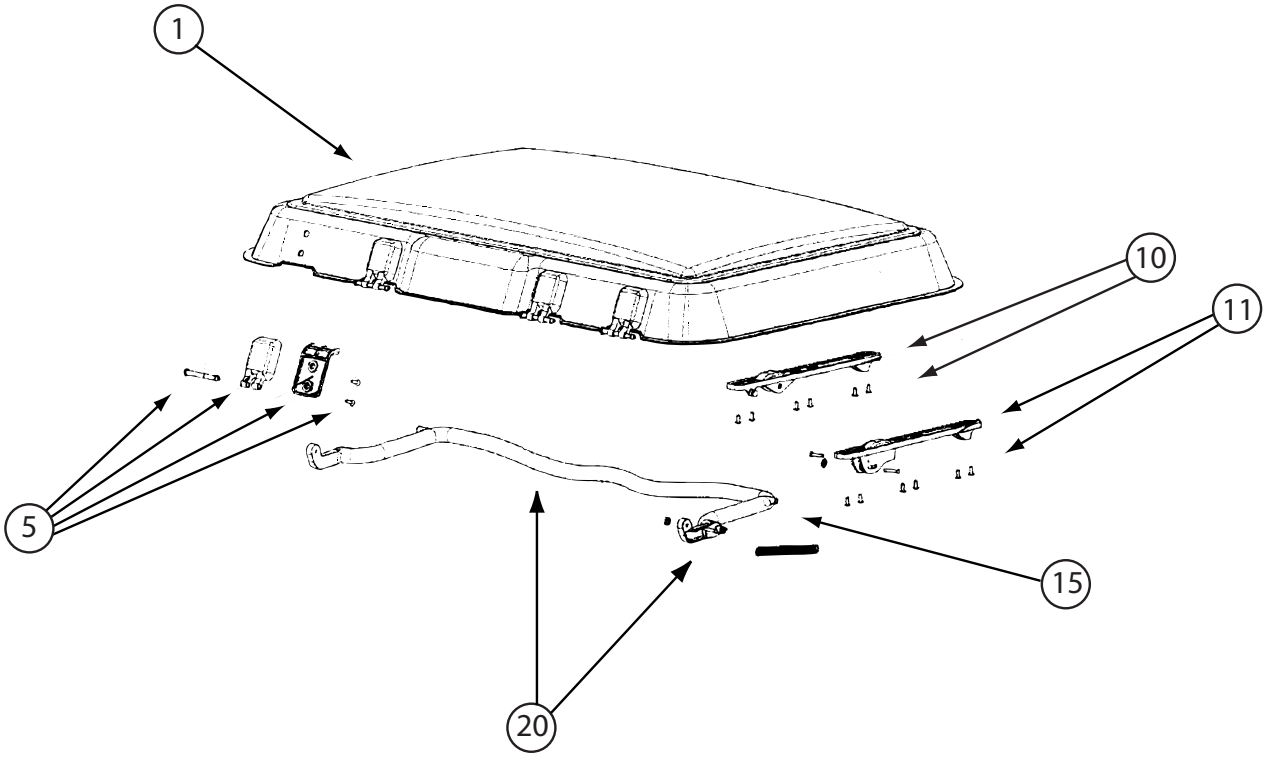

152882-01-01A (CONTINUED)

KEY	PART NUMBER	U/M	DESCRIPTION	VENDOR NO.
1	152882-01-700	EA	GLAZING DOME - W/O ASM PARTS	BG1512
5	152882-01-707	EA	HINGE W/FIXINGS	BG1513
10	152882-01-712	EA	CONNECTION PLATES	BG1514
15	152882-01-708	EA	SPRING F/OPERATING BAR	BG1515
20	152882-01-709	EA	OPERATING BAR	BG1516

COPYRIGHT © 2009 WINNEBAGO INDUSTRIES INC.

WINDOW & VENTS GROUP (CONTINUED)

COMPONENT PARTS FOR WINDOW & VENT LAYOUT (CONTINUED)

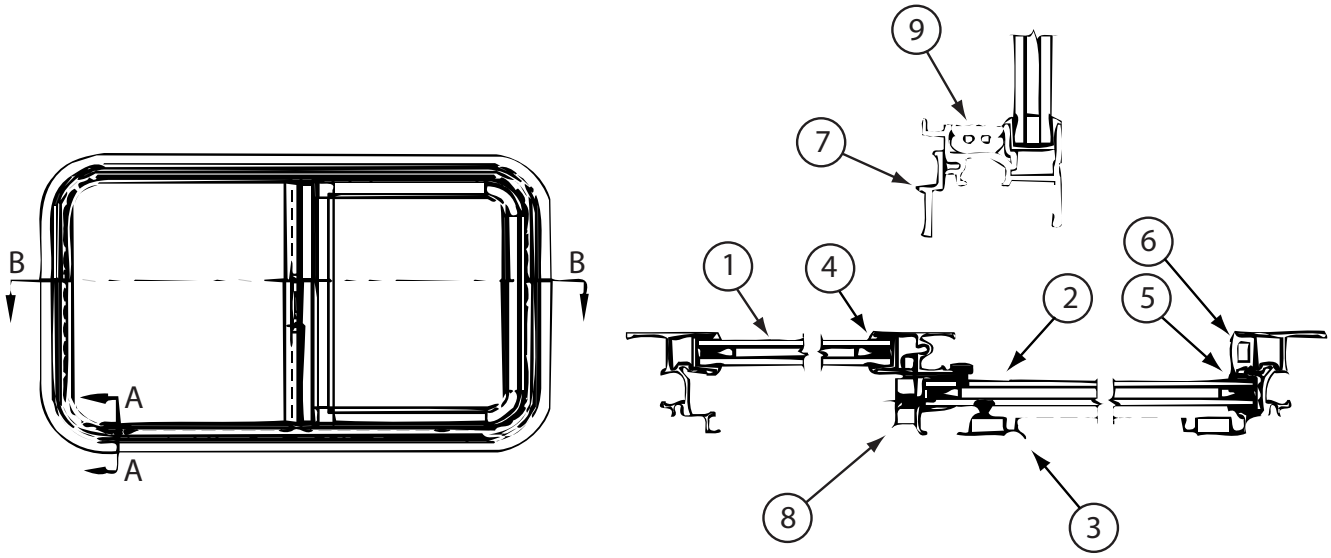

164922-01-01A

KEY	PART NUMBER	U/M	DESCRIPTION	VENDOR NO.
1	098647-06-700	EA	GLASS - STATIONARY 10.9X13.8	106-016921
2	098647-06-702	EA	GLASS-SLIDING W/SASH & LATCH	B969-G9
3	112795-56-702	EA	SCREEN ASM - W/SEALS & CLIPS	410-019414
4	098644-01-705	FT	GLAZING - STRIP	132-010231
5	098644-01-708	FT	CHANNEL - RUN PIERCED	122-016543
6	098644-01-716	FT	PLUG - FILLER	132-014470
7	112795-56-704	EA	RETAINER - TRIM - BLACK	B969-66
8	098644-01-700	EA	LATCH - REPAIR KIT (BLACK)	B801-CK
8	098647-54-701	EA	LATCH REPAIR KIT (RED)	B081-CK
9	098644-01-719	EA	STOP - SLIDER GLASS	132-014203
	098644-01-706	FT	WEATHERSTRIP-GLASS(FIN SEAL)	171-010668
	098644-01-710	FT	TRACK - SCREEN SPACER	132-017135
	098644-01-711	FT	WEATHERSTRIP-SCRN(FUZZY)BLK	171-017245/016965
	098644-01-717	FT	SPLINE - SCREEN	132-004716
	125582-01-701	EA	CLIP - SCREEN - PLASTIC	130-005153

164922-24-01A/03A, 164922-46-01A

KEY	PART NUMBER	U/M	DESCRIPTION	VENDOR NO.
1	098647-68-701	EA	GLASS - STATIONARY	096-029585
2	098647-74-700	EA	GLASS-SLIDING W/SASH & LATCH	H493C8
3	098647-47-702	EA	SCREEN ASM - W/SEALS & CLIPS	410-025226
4	098644-01-705	FT	GLAZING - STRIP	132-010231
5	098644-01-708	FT	CHANNEL - RUN PIERCED	122-016543
6	098644-01-716	FT	PLUG - FILLER	132-014470
7	098647-47-704	EA	RETAINER - TRIM	H493-66
8	098644-01-700	EA	LATCH - REPAIR KIT (BLACK)	B801-CK
8	098647-54-701	EA	LATCH REPAIR KIT (RED)	B081-CK
9	098644-01-719	EA	STOP - SLIDER GLASS	132-014203
	098644-01-706	FT	WEATHERSTRIP-GLASS(FIN SEAL)	171-010668
	098644-01-710	FT	TRACK - SCREEN SPACER	132-017135
	098644-01-711	FT	WEATHERSTRIP-SCRN(FUZZY)BLK	171-017245/016965
	098644-01-717	FT	SPLINE - SCREEN	132-004716
	125582-01-701	EA	CLIP - SCREEN - PLASTIC	130-005153

COPYRIGHT © 2009 WINNEBAGO INDUSTRIES INC.

WINDOW & VENTS GROUP (CONTINUED)

COMPONENT PARTS FOR WINDOW & VENT LAYOUT (CONTINUED)

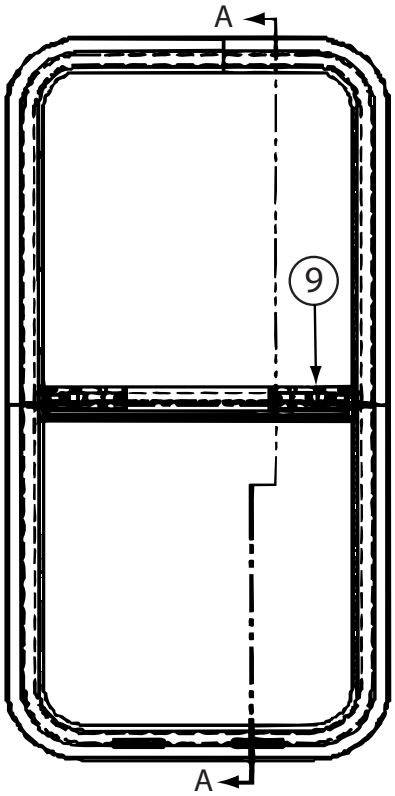

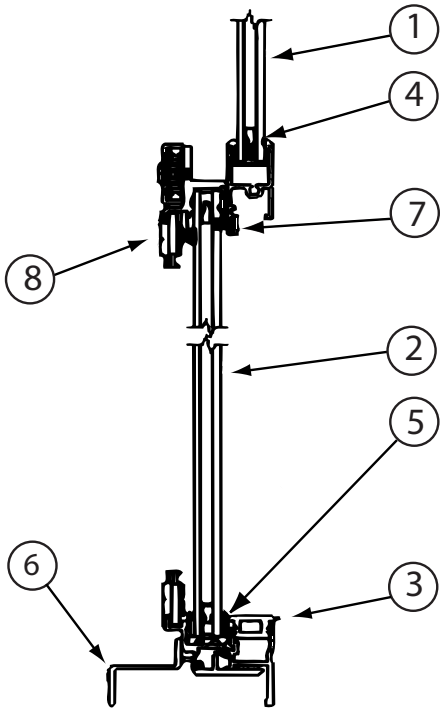

164973-01-01A/03A

KEY	PART NUMBER	U/M	DESCRIPTION	VENDOR NO.
1	098644-01-704	EA	GLASS - STATIONARY 10"X13.7"	106-011866
2	164973-01-702	EA	GLASS-SLIDING-W/LATCH/HANDLE	B155G9
3	098644-01-716	FT	PLUG - FILLER	132-014470
4	098644-01-705	FT	GLAZING - STRIP	132-010231
5	098644-01-708	FT	CHANNEL - RUN PIERCED	122-016543
6	164973-01-701	EA	RETAINER - TRIM RING - BLK	B15566
7	098644-01-706	FT	WEATHERSTRIP-GLASS(FIN SEAL)	171-010668
8	098644-01-712	EA	SCREEN ASM - W/SEALS & CLIPS	410-016476
9	098644-01-700	EA	LATCH - REPAIR KIT (BLACK)	B801-CK
	098644-01-710	FT	TRACK - SCREEN SPACER 12'	132-017135
	098644-01-711	FT	WEATHERSTRIP-SCRN(FUZZY)BLK	171-017245/016965
	098644-01-717	FT	SPLINE - SCREEN	132-004716
	112898-04-703	EA	VERTICAL LATCH/HOLD UP/OPEN	DH343-CK

164973-06-01A

KEY	PART NUMBER	U/M	DESCRIPTION	VENDOR NO.
1	098644-07-702	EA	GLASS - STATIONARY	106-015777
2	098644-07-703	EA	GLASS-SLIDING W/SASH & LATCH	H170G9
3	098644-01-716	FT	PLUG - FILLER	132-014470
4	098644-01-705	FT	GLAZING - STRIP	132-010231
5	098644-01-708	FT	CHANNEL - RUN PIERCED	122-016543
6	098644-07-705	EA	RETAINER - TRIM - BLACK	CH02-66
7	098644-01-706	FT	WEATHERSTRIP-GLASS(FIN SEAL)	171-010668
8	098644-07-704	EA	SCREEN ASM - W/SEALS & CLIPS	410-018863
9	098644-01-700	EA	LATCH - REPAIR KIT (BLACK)	B801-CK
	098644-01-710	FT	TRACK - SCREEN SPACER 12'	132-017135
	098644-01-711	FT	WEATHERSTRIP-SCRN(FUZZY)BLK	171-017245/016965
	098644-01-717	FT	SPLINE - SCREEN	132-004716
	112898-04-703	EA	VERTICAL LATCH/HOLD UP/OPEN	DH343-CK

COPYRIGHT © 2009 WINNEBAGO INDUSTRIES INC.

WINDOW & VENTS GROUP (CONTINUED)

COMPONENT PARTS FOR WINDOW & VENT LAYOUT (CONTINUED)

164973-08-01A

KEY	PART NUMBER	U/M	DESCRIPTION	VENDOR NO.
1	098644-13-700	EA	GLASS - STATIONARY	106-028698
2	098644-13-701	EA	GLASS-SLIDING W/SASH & LATCH	H702-G9
3	098644-01-716	FT	PLUG - FILLER	132-014470
4	098644-01-705	FT	GLAZING - STRIP	132-010231
5	098644-01-708	FT	CHANNEL - RUN PIERCED	122-016543
6	098644-13-703	EA	RETAINER - TRIM	H702-60
7	098644-01-706	FT	WEATHERSTRIP-GLASS(FIN SEAL)	171-010668
8	098644-13-702	EA	SCREEN ASM W/SEALS & CLIPS	410-028663
9	098644-01-700	EA	LATCH - REPAIR KIT (BLACK)	B801-CK
	098644-01-710	FT	TRACK - SCREEN SPACER 12'	132-017135
	098644-01-711	FT	WEATHERSTRIP-SCRN(FUZZY)BLK	171-017245/016965
	098644-01-717	FT	SPLINE - SCREEN	132-004716
	112898-04-703	EA	VERTICAL LATCH/HOLD UP/OPEN	DH343-CK

164973-16-01A

KEY	PART NUMBER	U/M	DESCRIPTION	VENDOR NO.
1	098644-01-704	EA	GLASS - STATIONARY 10"X13.7"	106-011866
2	164973-01-702	EA	GLASS-SLIDING-W/LATCH/HANDLE	B155G9
3	098644-01-716	FT	PLUG - FILLER	132-014470
4	098644-01-705	FT	GLAZING - STRIP	132-010231
5	098644-01-708	FT	CHANNEL - RUN PIERCED	122-016543
6	164973-16-700	EA	RETAINER - TRIM - BLACK	B15560
7	098644-01-706	FT	WEATHERSTRIP-GLASS(FIN SEAL)	171-010668
8	098644-01-712	EA	SCREEN ASM - W/SEALS & CLIPS	410-016476
9	098644-01-700	EA	LATCH - REPAIR KIT (BLACK)	B801-CK
	098644-01-710	FT	TRACK - SCREEN SPACER 12'	132-017135
	098644-01-711	FT	WEATHERSTRIP-SCRN(FUZZY)BLK	171-017245/016965
	098644-01-717	FT	SPLINE - SCREEN	132-004716
	112898-04-703	EA	VERTICAL LATCH/HOLD UP/OPEN	DH343-CK

COPYRIGHT © 2009 WINNEBAGO INDUSTRIES INC.