2009
ACCESS
WF224V
200-SERIES
SIERRA MAPLE
Y01 BEECHNUT
Y02 COPPER RIDGE
Y03 SILVER ICE

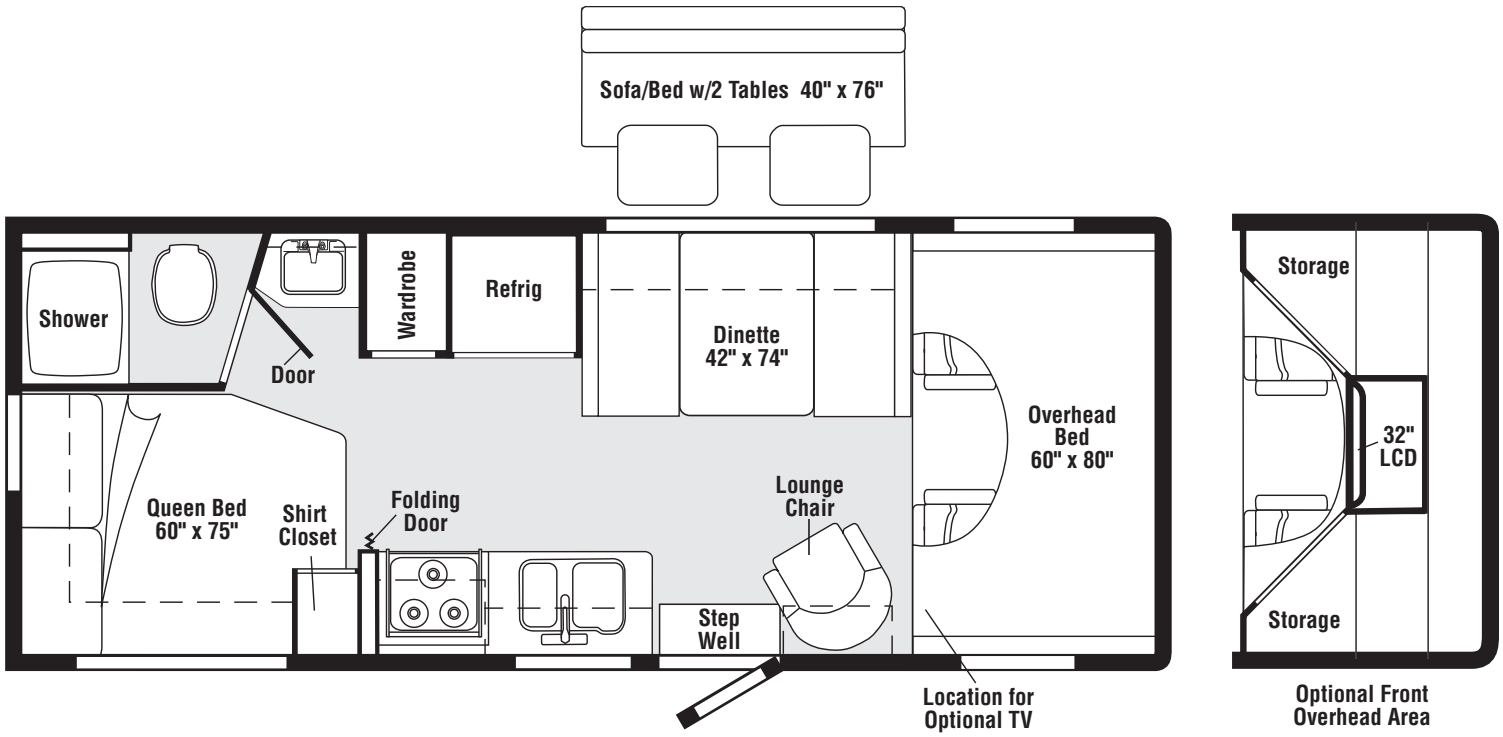

FLOORPLAN

COPYRIGHT © 2009 WINNEBAGO INDUSTRIES INC.

CONTENTS

FLOORPLAN 1
ACCESSORIES GROUP 5
OPERATORS MANUAL 5
AUDIO VIDEO GROUP 6
RADIO SYSTEM 6
REAR MONITOR 6
COMPONENT PARTS FOR REAR MONITOR 6
156442-02-01A, 156442-03-01A 6
CABINET & APPLIANCE GROUP 7
CABINET & APPLIANCE LAYOUT 7
COMPONENT PARTS FOR CABINET & APPLIANCE LAYOUT 12
114030-04-01A 12
121568-06-01A, 121568-07-01A, 121568-08-01A 14
136354-05-01A, 136354-05-02A 19
136354-06-01A, 136354-06-02A 20
151277-01-01A, 151277-02-01A 21
172238-01-01A 24
CHASSIS GROUP 25
FRAME 25
EXHAUST 26
HITCH 26
REAR BUMPER 26
FUEL 27
SPARE TIRE 28
WHEEL, TIRE, COVERS &/OR LINERS 28
COMPONENT PARTS FOR WHEEL, TIRE, COVERS &/OR LINERS 28
109443-05-000 28
110435-23-000 28
CURTAIN & CUSHION GROUP 29
CURTAIN & CUSHION LAYOUT 29
LOUNGE CHAIR 32
HARDWARE 33
FABRICS 35
DRIVERS COMPARTMENT GROUP 37
FRONT INTERIOR 37
CABINETS 40

COPYRIGHT © 2009 WINNEBAGO INDUSTRIES INC.

CONTENTS (CONTINUED)

ELECTRICAL GROUP 41
110V BODY WIRING 41
12V BODY WIRING 42
EXTERIOR LAMPS 45
FRONT END 46
FRONT TV/DVD 47
SIDE TV/DVD 48
COMPONENT PARTS FOR WIRING 49
076319-23-000 49
076319-25-000 49
093575-47-01A 50
134940-06-01A 50
134940-07-01A 50
137417-01-01A, 137417-03-01A 51
137417-02-01A 51
137417-04-01A 51
137417-05-01A 51
137417-06-01A 51
153658-01-01A, 153658-01-02A 51
160603-01-000 51
164270-01-000 51
164495-01-000 51
165170-01-01A 51
169151-01-000, 169151-02-000 51
170909-01-000 51
CIRCUIT BREAKERS, FUSES & RELAYS 52
CONVERTER, INVERTER & LOAD CENTER 52
COMPONENT PARTS FOR CONVERTER, INVERTER & LOAD CENTER 52
083208-07-000 52
BOXES & CORDS 53
WIRE ASSEMBLIES 53
CONNECTORS & CONDUIT 54
CHASSIS 56
COMPONENT PARTS FOR CHASSIS 57
086280-01-000 57
EXTERIOR BODY GROUP 58
GRAPHICS & PAINT 58
PANELS & TRIMS 59
MIRRORS 62
COMPONENT PARTS FOR MIRRORS 62
133908-05, 133908-06, 133908-10, 133908-11, 133908-14, 133908-15, -01A/02A 62
167450-01-03A 62
167450-02-03A 62
167450-03-03A 62
167450-04-03A 62
STRUCTURAL COMPONENTS 63
AWNINGS 63
EXTERIOR DOORS & COMPARTMENTS GROUP 64
DOORS & COMPARTMENTS LAYOUT 64
COMPONENT PARTS FOR DOORS & COMPARTMENTS LAYOUT 67
094708-05-01A 67
172626-01-01A 67
COMPARTMENT DOOR PIECE PARTS 68
ENTRY 69
SCREEN 70
LATCH - ENTRY 71
GENERATOR GROUP 72
GAS 72

COPYRIGHT © 2009 WINNEBAGO INDUSTRIES INC.

CONTENTS (CONTINUED)

HEATING & A/C GROUP 73
FURNACE 73
COMPONENT PARTS FOR FURNACE 74
139980-01-000 74
ROOF 76
COMPONENT PARTS FOR ROOF 76
131185-04-01A 76
156860-02-01A 77
INTERIOR FINISH GROUP 78
MOLDINGS & TRIMS 78
PANELING & LAMINATES 90
INTERIOR TRIM LAYOUT 91
FLOOR COVERINGS 93
HARDWARE 93
LABELS GROUP 99
LP GROUP 103
LP SYSTEM 103
COMPONENT PARTS FOR LP SYSTEM 103
144116-04-000 103
SEALANTS & FASTENERS GROUP 104
SEALANTS & ADHESIVES 104
BOLTS, NUTS & WASHERS 105
SCREWS 107
CLAMPS, CLIPS, GROMMETS, RIVETS & PLUGS 110
MISCELLANEOUS FASTENERS 111
WATER & DRAINAGE GROUP 112
DRAINAGE SYSTEM 112
COMPONENT PARTS FOR DRAINAGE SYSTEM 114
062415-01-000 114
096927-01-02A 114
147421-04-01A, 147421-05-01A 114
WATER SYSTEM 115
COMPONENT PARTS FOR WATER SYSTEM 121
051391-03-000 121
140117-02-01A 122
145541-02-000 122
148886-01-01A, 148886-02-02A 122
WINDOWS & VENTS GROUP 123
WINDOWS & VENTS LAYOUT 123
COMPONENT PARTS FOR WINDOWS & VENTS LAYOUT 124
122882-01-01A 124
122882-02-01A, 122882-03-01A 124
151075-02-01A 125
164922-04-01A/03A, 164922-05-01A 126
164922-08-01A, 164922-09-01A/03A 126
164922-11-01A 127
164922-14-01A/03A, 164922-17-01A 127

COPYRIGHT © 2009 WINNEBAGO INDUSTRIES INC.

ACCESSORIES GROUP

OPERATORS MANUAL

KEY	PART NUMBER	U/M	DESCRIPTION
	158603-09-002	EA	MANUAL/OWNER - SUPPLEMENT - 200 SERIES - 2009
	159842-01-01A	EA	CASE - VINYL - F/MANUALS - W/SLEEVES - BLACK
	161500-09-002	EA	MANUAL/OWNER - ACCESS - 200 SERIES - 2009
	164983-01-000	DW	TOP LEVEL-200,2009

COPYRIGHT © 2009 WINNEBAGO INDUSTRIES INC.

AUDIO VIDEO GROUP

RADIO SYSTEM

KEY	PART NUMBER	U/M	DESCRIPTION
	155619-02-000	EA	RADIO - AM/FM CD-W/O REMOTE/WIRE HARNESS-MAGNADYNE M3200CD
	152593-01-000	EA	BRACKET - RADIO MOUNTING - FORD

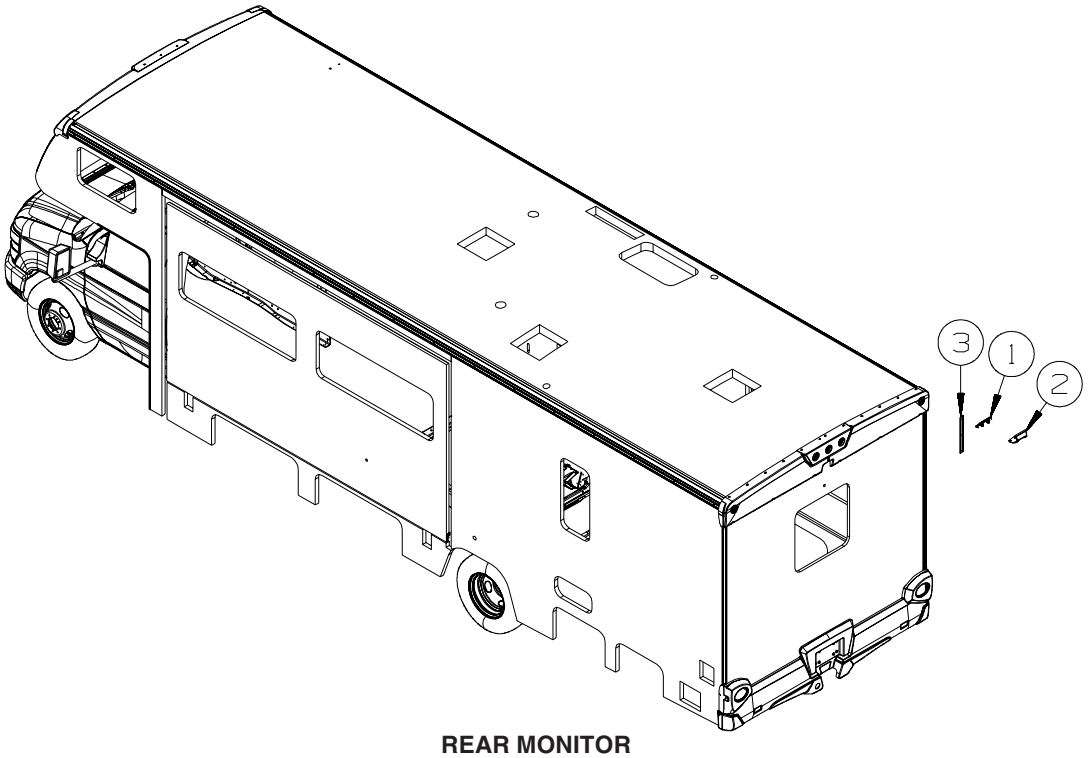

REAR MONITOR

KEY	PART NUMBER	U/M	DESCRIPTION
*	156442-03-01A	EA	MONITOR/COLOR-5.6"/LCD - W/AUDIO - PLAS POD MOUNT-TAN/BLK
	156930-03-01A	EA	MONITOR/LCD - 5.6" - W/AUDIO - PLASTIC POD MOUNT - TAN - 1PY
	144677-14-01A	EA	CAMERA - REAR VIEW W/BRACKET - WHITE - VBCS150
	160883-02-02B	EA	BRACKET - MONITOR - E-COATED
1	NOT USED		
2	NOT USED		
3	154189-06-02A	EA	COVER/TRIM - WIRING - 17.3" - ALMOND

***COMPONENT PARTS LISTED LATER IN THIS GROUP**

COMPONENT PARTS FOR REAR MONITOR

156442-02-01A, 156442-03-01A

KEY	PART NUMBER	U/M	DESCRIPTION	VENDOR NO.
	156442-02-700	EA	SHROUD - REAR VIEW MONITOR	33200013
	156442-02-701	EA	BRACKET - MOUNTING	32300012

COPYRIGHT © 2009 WINNEBAGO INDUSTRIES INC.

CABINET & APPLIANCE GROUP

CABINET & APPLIANCE LAYOUT

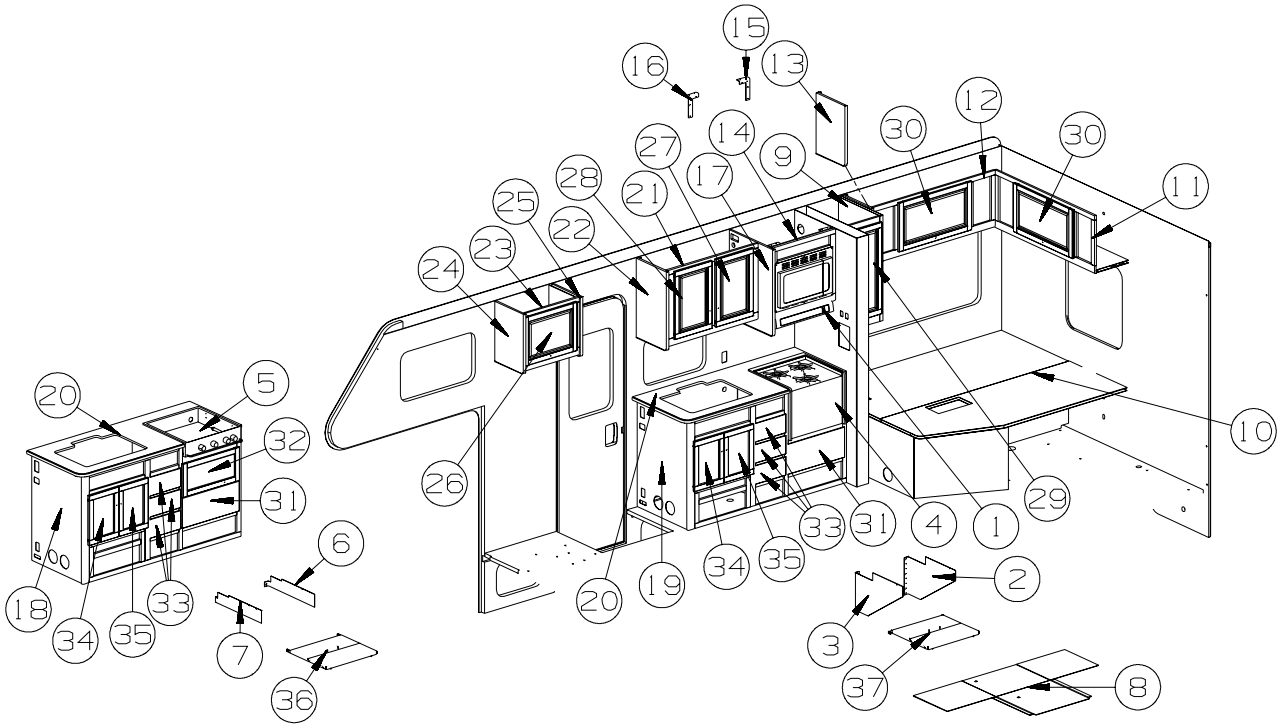

KEY	PART NUMBER	U/M	DESCRIPTION
1*	136354-05-01A	EA	HOOD - RANGE - W/LITE/FAN - BLACK TEXTURED - UL
1*	136354-06-01A	EA	HOOD - RANGE - W/LITE/FAN - BLACK TEXTURED - CSA - 265
	117806-01-000	EA	BULB - 12V - #912 - 1.0 AMP
2	140176-03-02B	EA	BRACKET/TIEDOWN - STOVE - E-COATED - 13G
3	140176-04-02B	EA	BRACKET/TIEDOWN - STOVE - E-COATED - 13G
4*	151277-01-01A	EA	RANGE-16"-3 BURNER - MERCURY FREE - BLACK DOOR/TEXTURED - 13G
5*	114030-04-01A	EA	RANGE - 3 BRNR TOP/NEW STYLE KNOBS/GRATES-W/O OVEN-BLK
6	142139-15-02B	EA	BRACKET/TIEDOWN - STOVE - E-COATED
7	142139-16-02B	EA	BRACKET/TIEDOWN - STOVE - E-COATED
8	162694-01-01A	EA	ENCLOSURE - STOVE - 20.7"W X 16.1"H X 18.7"D - 13G
9	158495-01-U02	EA	CABINET - OVERHEAD/SHIRT - W/O DOORS/HDW
10	089076-08-000	EA	H-CHANNEL - SUPPORT/BED - 72.6" - OFF WHITE
11	158482-01-U02	EA	CABINET - OVERHEAD/REAR - W/O DOORS/HDW
12	158483-01-U02	EA	CABINET - OVERHEAD/REAR - W/O DOORS/HDW
13	P58483-15-U02	EA	END CAP - OVERHEAD CABINET
14	158471-02-Y01	EA	CABINET - OVERHEAD/MICROWAVE - W/O DOORS/HDW FROM: 00-00-00 THRU: 02-01-09
14	172667-01-Y01	EA	CABINET - OVERHEAD/MICROWAVE - W/O DOORS/HDW FROM: 02-02-09 THRU: 99-99-99
14	158471-02-Y02	EA	CABINET - OVERHEAD/MICROWAVE - W/O DOORS/HDW FROM: 00-00-00 THRU: 02-01-09
14	172667-01-Y02	EA	CABINET - OVERHEAD/MICROWAVE - W/O DOORS/HDW FROM: 02-02-09 THRU: 99-99-99
14	158471-02-Y03	EA	CABINET - OVERHEAD/MICROWAVE - W/O DOORS/HDW FROM: 00-00-00 THRU: 02-01-09
14	172667-01-Y03	EA	CABINET - OVERHEAD/MICROWAVE - W/O DOORS/HDW FROM: 02-02-09 THRU: 99-99-99
15	149420-05-02B	EA	BRACE - MICROWAVE - E-COATED FROM: 00-00-00 THRU: 02-01-09
15	098916-45-02B	EA	BRACE - MICROWAVE CABINET - LEFT HAND - E-COATED FROM: 02-02-09 THRU: 99-99-99
16	149420-06-02B	EA	BRACE - MICROWAVE - E-COATED FROM: 00-00-00 THRU: 02-01-09
16	098916-46-02B	EA	BRACE - MICROWAVE CABINET - RIGHT HAND - E-COATED FROM: 02-02-09 THRU: 99-99-99
17	P58471-17-U02	EA	END CAP - OVERHEAD CABINET FROM: 00-00-00 THRU: 02-01-09
17	P72667-16-Y01	EA	END CAP - OVERHEAD CABINET FROM: 02-02-09 THRU: 99-99-99

COPYRIGHT © 2009 WINNEBAGO INDUSTRIES INC.

CABINET & APPLIANCE GROUP (CONTINUED)

CABINET & APPLIANCE LAYOUT (CONTINUED)

KEY	PART NUMBER	U/M	DESCRIPTION
18	P68365-02-Y01	EA	CABINET - GALLEY - W/O COUNTERTOP/DOORS/DRAWERS/HDW
19	P68365-01-Y01	EA	CABINET - GALLEY - W/O COUNTERTOP/DOORS/DRAWERS/HDW - 13G
20	133653-81-Y01	EA	COUNTERTOP - LAMINATED - AMBER GREEN/SIERRA MAPLE
20	133653-81-Y02	EA	COUNTERTOP - LAMINATED - HOUSE ROCK/SIERRA MAPLE
20	133653-81-Y03	EA	COUNTERTOP - LAMINATED - CLASSIC ROCK/SIERRA MAPLE
21	158501-01-U02	EA	CABINET - OVERHEAD/GALLEY - W/O DOORS/HDW
22	P58501-17-U02	EA	END CAP - OVERHEAD CABINET
23	163473-01-W08	EA	CABINET - OVERHEAD/FRONT/RH HAND - W/O DOORS/HDW
23	164705-01-W08	EA	CABINET - OVERHEAD/FRONT/RH HAND - W/O DOORS/HDW - 1MJ
24	P63473-15-W08	EA	END CAP - OVERHEAD CABINET
24	P64705-15-W08	EA	END CAP - OVERHEAD CABINET - 1MJ
25	P63473-16-W08	EA	END CAP - OVERHEAD CABINET
25	P64705-16-W08	EA	END CAP - OVERHEAD CABINET - 1MJ
26	164492-D0-Y05	EA	DOOR - RAISED/PENCIL EDGE - 15.7" X 20.5" - W/O HDW
27	164492-A8-Y01	EA	DOOR - RAISED/PENCIL EDGE - 14.4" X 21.8" - W/O HDW
28	164492-A7-Y01	EA	DOOR - RAISED/PENCIL EDGE - 14.4" X 21.8" - W/O HDW
29	164492-28-Y01	EA	DOOR - RAISED/PENCIL EDGE - 10" X 29.5" - W/O HDW
30	164492-D3-Y05	EA	DOOR - RAISED/PENCIL EDGE - 15.7" X 28" - W/O HDW
31	161074-04-UQ1	EA	DRAWER - PENCIL EDGE - 19.8"W X 11.8"D - W/O SLIDES/HDW
32	164491-E8-Y07	EA	DOOR - FLAT/PENCIL EDGE - 10.8" X 21.8" - W/O HDW
33	161074-01-W08	EA	DRAWER - PENCIL EDGE - 5.3"W X 19.7"D - W/O SLIDES/HDW
34	164491-57-Y01	EA	DOOR - FLAT/PENCIL EDGE - 11.4" X 16.1" - W/O HDW
35	164491-56-Y01	EA	DOOR - FLAT/PENCIL EDGE - 11.4" X 16.1" - W/O HDW
36	126022-05-01A	EA	COVER/RANGE - BI-FOLD - 22" - NEW GRATES - 086
37	126022-04-01A	EA	COVER/RANGE - BI-FOLD - 16" - NEW GRATES - 086/13G

***COMPONENT PARTS LISTED LATER IN THIS GROUP**

COPYRIGHT © 2009 WINNEBAGO INDUSTRIES INC.

CABINET & APPLIANCE GROUP (CONTINUED)

CABINET & APPLIANCE LAYOUT (CONTINUED)

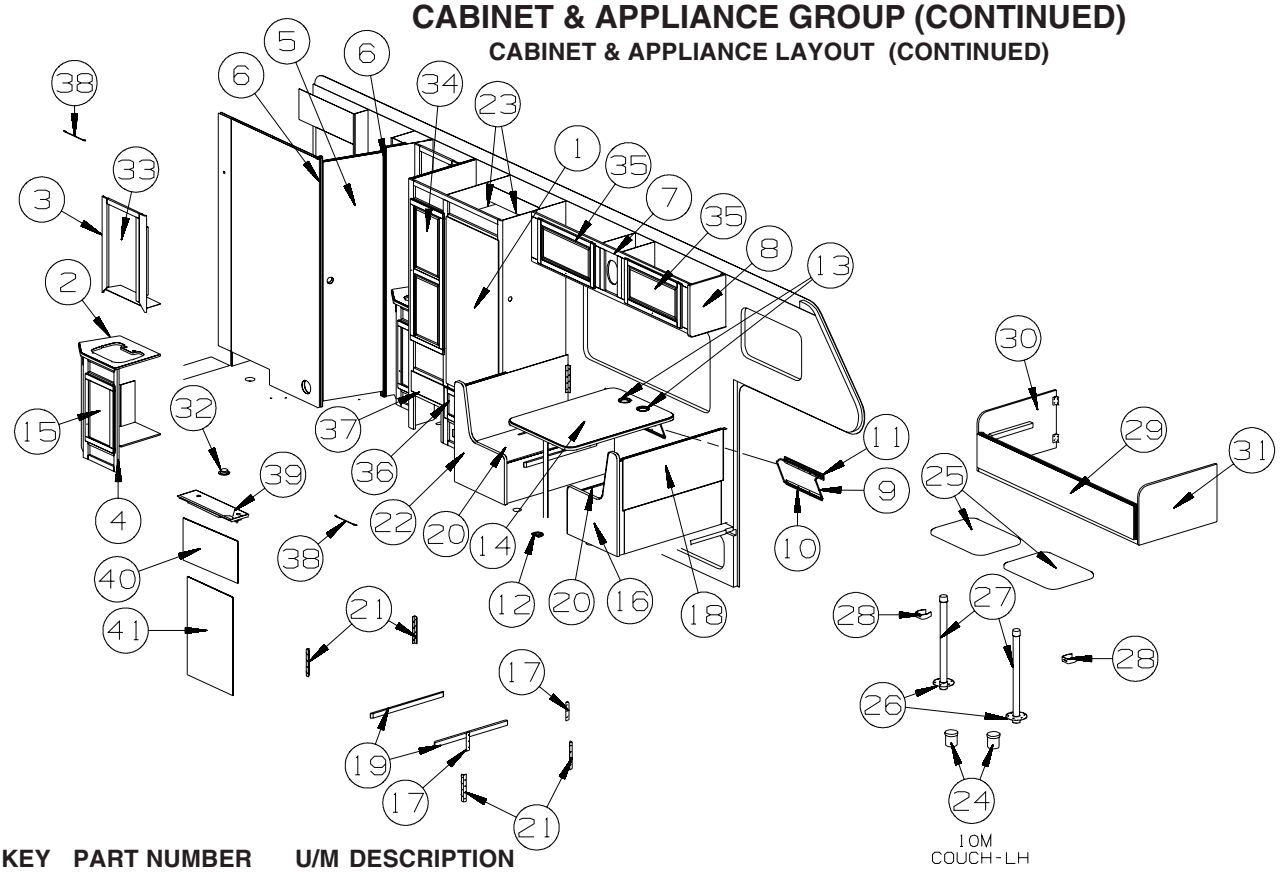

KEY	PART NUMBER	U/M	DESCRIPTION
1*	121568-07-01A	EA	REFRIGERATOR - SMALL DBL DOOR-LH/2 WAY- 52.8"HX23.5"WX24"D
2	133654-31-Y01	EA	COUNTERTOP - LAMINATED - AMBER GREEN/SIERRA MAPLE (Y01)
2	133654-31-U02	EA	COUNTERTOP - LAMINATED - HOUSE ROCK/SIERRA MAPLE (Y02)
2	133654-31-U04	EA	COUNTERTOP - LAMINATED - CLASSIC ROCK/SIERRA MAPLE (Y03)
3	158543-01-U02	EA	CABINET - OVERHEAD/MEDICINE - W/O DOORS/HDW
4	158602-01-U02	EA	CABINET - LAVATORY - W/O COUNTERTOP/DOORS/DRAWERS/HDW
5	144645-10-U02	EA	DOOR - BATH - W/O TOWEL RACK/HARDWARE
6	105394-02-08A	EA	JAMB - DOOR/MOLDED PLASTIC - 79.8" - SIERRA MAPLE
7	158465-06-Y01	EA	CABINET - OVERHEAD/DINETTE - W/O DOORS/HDW
7	158465-06-Y02	EA	CABINET - OVERHEAD/DINETTE - W/O DOORS/HDW
7	158465-06-Y03	EA	CABINET - OVERHEAD/DINETTE - W/O DOORS/HDW
8	P58465-20-U02	EA	END CAP - OVERHEAD CABINET
9	170151-01-01A	EA	ROD - TABLE LIFT - W/ARMS 8" & BASE ROD 18.5" - ALMOND
10	170152-01-01A	EA	BRACKET/WALL - TABLE LIFT - 17.1" - ALMOND
11	140921-02-02A	EA	BRACKET/TABLE SUPPORT - 18.5" - ALMOND
12	143798-01-02A	EA	CATCH - FLOOR TO TABLE LEG - ALMOND
12	143798-02-02A	EA	CATCH - TABLE LEG TO FLOOR - ALMOND
12	143798-03-02A	EA	WASHER/CATCH - TABLE LEG - ALMOND
13	164128-02-03A	EA	HOLDER/CUP - TWO STEP - ALMOND
14	144605-03-Y01	EA	TABLE - DINETTE - 41.6" X 29.7" - W/O HARDWARE (Y01)
14	144605-03-U02	EA	TABLE - DINETTE - 41.6" X 29.7" - W/O HARDWARE (Y02)
14	144605-03-U04	EA	TABLE - DINETTE - 41.6" X 29.7" - W/O HARDWARE (Y03)
15	164491-90-Y01	EA	DOOR - FLAT/PENCIL EDGE - 13.4" X 21.8" - W/O HDW
16	145004-22-U02	EA	CABINET/DINETTE-RH-W/END CAP/BACK/FACE-W/O SEAT BOARD
	P45004-C5-U02	EA	END CAP - DINETTE SEAT BASE
17	111474-01-01A	EA	PLATE-STOP O/W
18	145004-70-S88	EA	SEAT BACK - DINETTE - HINGED PORTION - W/O HINGE/HDW
19	081295-01-T02	EA	SUPPORT - BED/DINETTE - 28" LONG
20	096764-02-000	FT	SLIPNOT - ANTISLIP - 1'WIDE (20' ROLLS) - WHITE
21	122021-01-02A	EA	ANGLE - W/HOLES - 8.6" LONG - OFF WHITE
22	145004-23-U02	EA	CABINET/DINETTE-LH-W/END CAP/BACK/FACE-W/O SEAT BOARD
	P45004-C7-U02	EA	END CAP - DINETTE SEAT BASE
23			REFRIGERATOR CABINET SEALS
	090329-01-000	FT	SEAL - "T" - REFRIGERATOR CABINET
24	042438-02-000	EA	DOWEL - WOOD - 2"DIAMETER X 2"

COPYRIGHT © 2009 WINNEBAGO INDUSTRIES INC.

CABINET & APPLIANCE GROUP (CONTINUED)

CABINET & APPLIANCE LAYOUT (CONTINUED)

KEY	PART NUMBER	U/M	DESCRIPTION
25	081298-14-Y01	EA	TABLE - W/BASE F/TABLE LEG (Y01)
			FROM: 00-00-00 THRU: 09-28-08
25	171184-01-Y01	EA	TABLE - DINETTE/PEDESTAL - 17" X 24" - W/O HDW
			FROM: 09-29-08 THRU: 99-99-99
25	081298-14-U02	EA	TABLE - W/BASE F/TABLE LEG (Y02)
			FROM: 00-00-00 THRU: 09-28-08
25	171184-01-Y02	EA	TABLE - DINETTE/PEDESTAL - 17" X 24" - W/O HDW
			FROM: 09-29-08 THRU: 99-99-99
25	081298-14-U04	EA	TABLE - W/BASE F/TABLE LEG (Y03)
			FROM: 00-00-00 THRU: 09-28-08
25	171184-01-Y03	EA	TABLE - DINETTE/PEDESTAL - 17" X 24" - W/O HDW
			FROM: 09-29-08 THRU: 99-99-99
	130969-02-Y01	EA	TABLE TOP ONLY - PEDESTAL TYPE (Y01)
			FROM: 00-00-00 THRU: 09-28-08
	130969-02-U02	EA	TABLE TOP ONLY - PEDESTAL TYPE (Y02)
			FROM: 00-00-00 THRU: 09-28-08
	130969-02-U04	EA	TABLE TOP ONLY - PEDESTAL TYPE (Y03)
			FROM: 00-00-00 THRU: 09-28-08
	155001-02-01A	EA	BASE - LEG MOUNT/FLOOR/TABLE - RAISED - SILVER - NOT ILLUSTRATED
			FROM: 09-29-08 THRU: 99-99-99
26	155001-03-01A	EA	BASE - LEG MOUNT/FLOOR/TABLE - RECESSED - SILVER
27	155001-04-01A	EA	LEG - PEDESTAL TABLE - 29" - SILVER
28	062046-01-000	EA	CLIP - LEG - PEDESTAL - 1.7" X 2.2" - DIA FROM 2" - 2.5"
29	158369-12-Y01	EA	DOOR/FRONT KICK PANEL - SOFA/BED - FABRIC COVERED
29	158369-12-Y02	EA	DOOR/FRONT KICK PANEL - SOFA/BED - FABRIC COVERED
29	158369-12-Y03	EA	DOOR/FRONT KICK PANEL - SOFA/BED - FABRIC COVERED
30	158369-15-Y01	EA	PANEL - RIGHT END - SOFA/BED - FABRIC COVERED
30	158369-15-Y02	EA	PANEL - RIGHT END - SOFA/BED - FABRIC COVERED
30	158369-15-Y03	EA	PANEL - RIGHT END - SOFA/BED - FABRIC COVERED
31	158369-19-Y01	EA	PANEL - LEFT END - SOFA/BED - FABRIC COVERED
31	158369-19-Y02	EA	PANEL - LEFT END - SOFA/BED - FABRIC COVERED
31	158369-19-Y03	EA	PANEL - LEFT END - SOFA/BED - FABRIC COVERED
32	054450-01-000	EA	LEVEL - REFRIGERATOR
33	145576-D5-Y01	EA	DOOR - MIRRORED - 15.2" X 28.3" - W/O HARDWARE
	093606-03-000	EA	MIRROR - BEVELED EDGE - 28.3" X 15.1"
34	164492-C7-Y01	EA	DOOR - RAISED/PENCIL EDGE - 15.5" X 45.4" - W/O HDW
35	164492-A9-Y01	EA	DOOR - RAISED/PENCIL EDGE - 14.4" X 26.8" - W/O HDW
35	146028-E9-Y01	EA	DOOR - GLASS INSERT/PENCIL EDGE - 14.4" X 26.7" - W/O HDW - 086
36	164491-25-Y01	EA	DOOR - FLAT/PENCIL EDGE - 10" X 25.2" - W/O HDW
37	161074-24-W08	EA	DRAWER - PENCIL EDGE - 13.1"W X 21.6"D - W/O SLIDES/HDW
38	076767-04-000	EA	CABLE - STAINLESS STEEL - 5.9"
39	116751-01-01A	EA	TRAY - REFRIGERATOR
40	158456-01-01A	EA	INSERT/REFRIGERATOR DOOR - 21.5"W X 14.5"H - TITANIUM SST - 086
41	158456-02-01A	EA	INSERT/REFRIGERATOR DOOR - 21.5"W X 31.6"H - TITANIUM SST - 086

***COMPONENT PARTS LISTED LATER IN THIS GROUP**

COPYRIGHT © 2009 WINNEBAGO INDUSTRIES INC.

CABINET & APPLIANCE GROUP (CONTINUED)

CABINET & APPLIANCE LAYOUT (CONTINUED)

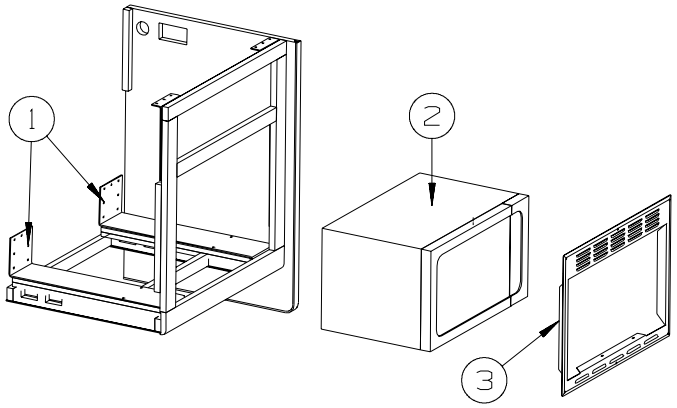

MICROWAVE INSTALLATION

FROM: 00-00-00 THRU: 02-01-09

KEY	PART NUMBER	U/M	DESCRIPTION
1	143759-11-02B	EA	BRACKET - MICROWAVE - E-COATED
2	158686-02-01A	EA	OVEN/MICROWAVE - .9 CU FT - NON-CONV - W/O TRIM/VENTS-BLK
3	164197-01-01A	EA	TRIM KIT - MICROWAVE - ONE PIECE - BLACK

FROM: 02-02-09 THRU: 99-99-99

KEY	PART NUMBER	U/M	DESCRIPTION
1	143759-11-02B	EA	BRACKET - MICROWAVE - E-COATED
2*	172238-01-01A	EA	OVEN/MICROWAVE - 1.0 CU FT - NON-CONV - W/O TRIM KIT - BLK
3	172238-02-01A	EA	TRIM KIT - MICROWAVE - BASE PAN/TOP DUCT - BLACK

***COMPONENT PARTS LISTED LATER IN THIS GROUP**

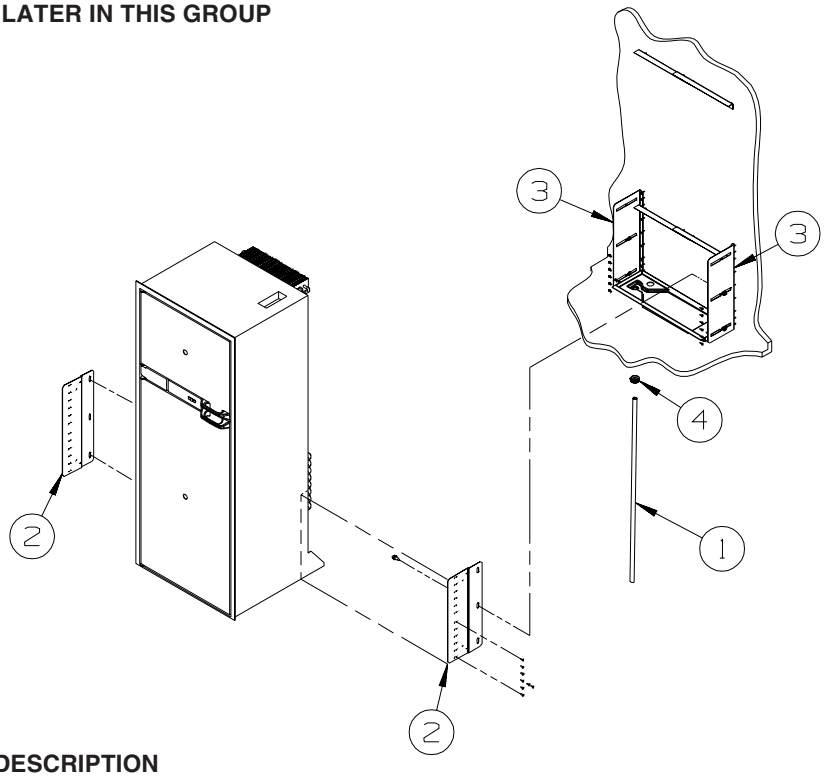

REFRIGERATOR INSTALLATION

KEY	PART NUMBER	U/M	DESCRIPTION
1	112176-01-000	FT	TUBING - VINYL - REINFORCED - 1/2" ID
2	150740-01-02B	EA	BRACKET/TIEDOWN - REFRIGERATOR - E-COATED
3	150740-02-02B	EA	BRACKET/TIEDOWN - REFRIGERATOR - E-COATED
4	152417-01-01A	EA	CLAMP/RATCHET - F/REFRIGERATOR DRIP TRAY HOSE - BLACK

COPYRIGHT © 2009 WINNEBAGO INDUSTRIES INC.

CABINET & APPLIANCE GROUP (CONTINUED)

COMPONENT PARTS FOR CABINET & APPLIANCE LAYOUT

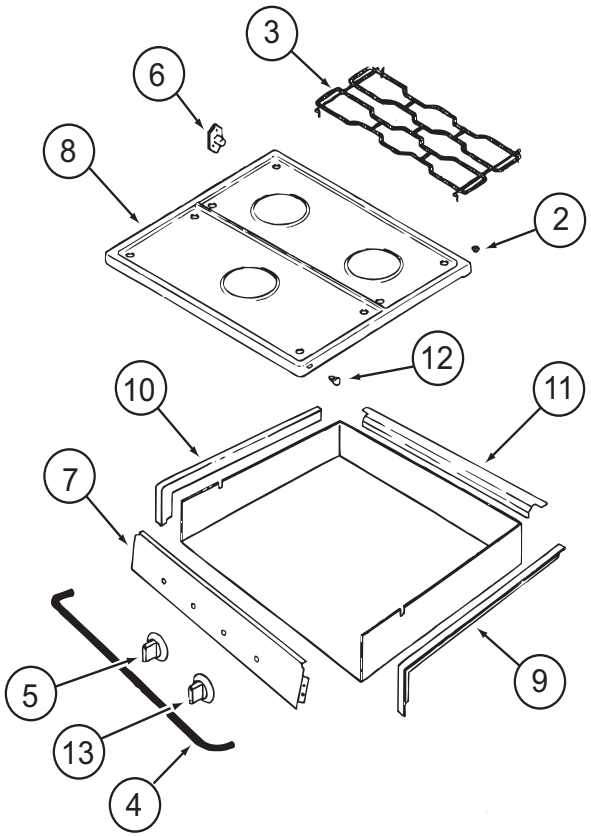

114030-04-01A

KEY	PART NUMBER	U/M	DESCRIPTION	VENDOR NO.
2	102020-01-709	EA	BUMPER-GRATE	8007P020-60
3	112881-04-702	EA	GRATE - BLACK	74007277
4	114030-02-700	EA	GUARD/FABRIC - TOWEL BAR	3609F006-70
5	128728-01-701	EA	KNOB - BURNER - REAR	74003941 (1 PER)
5	128728-01-702	EA	KNOB - BURNER - FRONT	74003942
6	128728-01-703	EA	PIN/T-NUT F/HINGE	7103P109-60
7	114030-04-700	EA	PANEL - MANIFOLD - BLACK	74007325
8	126023-01-728	EA	TOP - MAIN (BLACK)	74003323
9	114030-01-704	EA	TRIM - RIGHT/BLACK TEXTURED	74002839
10	114030-01-705	EA	TRIM - LEFT/BLACK TEXTURED	74002840
11	114030-01-706	EA	TRIM - REAR/BLACK TEXTURED	74002841
12	102020-01-724	EA	BUMPER - MAIN TOP	8003P008-60
13	128728-01-707	EA	KNOB - IGNITER	74003944

CONTACT WINNEBAGO PART SALES FOR UNLISTED COMPONENT(S)

COPYRIGHT © 2009 WINNEBAGO INDUSTRIES INC.

CABINET & APPLIANCE GROUP (CONTINUED)

COMPONENT PARTS FOR CABINET & APPLIANCE LAYOUT (CONTINUED)

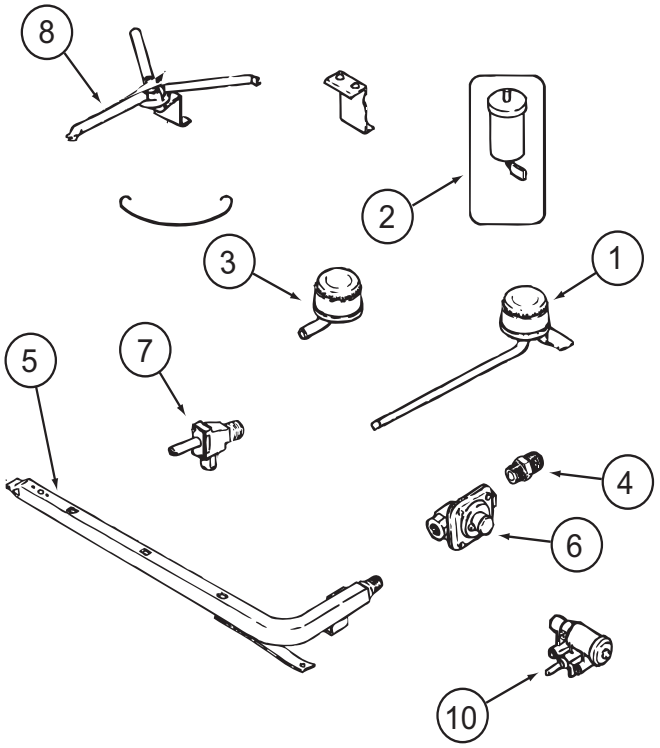

114030-04-01A (CONTINUED)

KEY	PART NUMBER	U/M	DESCRIPTION	VENDOR NO.
1	112881-04-700	EA	BURNER - TOP /LEFT REAR	74004584
1	126023-01-700	EA	BURNER - TOP (RT-REAR) 5100 BTU	74004583
2	112881-04-705	EA	PUSH RING (ELECTRODE MTG)	7104P002-60
2	126023-01-711	EA	ELECTRODE - IGNITER (ONLY)	7432P077-60
3	112881-04-701	EA	BURNER - TOP/FRONT	74004582
4	135065-03-700	EA	FITTING - HALF UNION	74004234
5	135065-01-702	EA	PIPE/MANIFOLD	74004642
6	126023-02-703	EA	REGULATOR - PRESSURE	74004235
7	126023-02-705	EA	VALVE - BURNER - REAR	74004362
7	126023-02-706	EA	VALVE - BURNER - FRONT	74004363
8	126023-01-736	EA	FLASH TUBE EXTENSION (REAR)	74003326
8	126023-01-737	EA	FLASH TUBE EXTENSION (FRONT)	74003327
10	126023-01-719	EA	IGNITER HEAD - TOP BURNER	74002413
	126023-02-702	EA	PIPE - MANIFOLD	74004360
			CONTACT WINNEBAGO PART SALES FOR UNLISTED COMPONENT(S)	

COPYRIGHT © 2009 WINNEBAGO INDUSTRIES INC.

CABINET & APPLIANCE GROUP (CONTINUED)

COMPONENT PARTS FOR CABINET & APPLIANCE LAYOUT (CONTINUED)

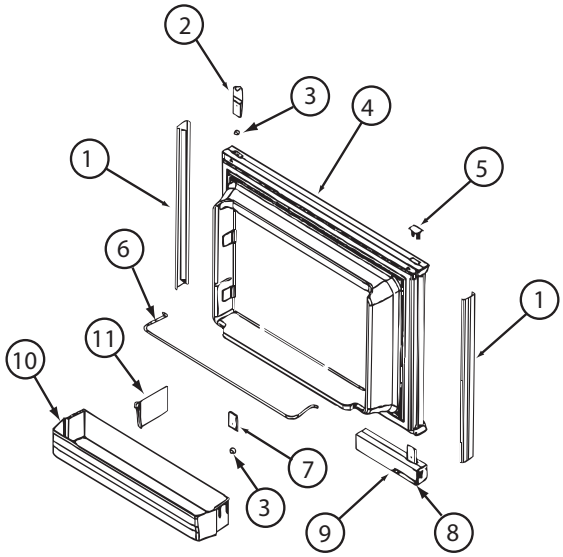

121568-06-01A, 121568-07-01A, 121568-08-01A

KEY	PART NUMBER	U/M	DESCRIPTION	VENDOR NO.
1	121568-03-700	EA	RETAINER-DOOR PNL/WAFFLE/BLK	619558-WDL-UPPER
2	120075-01-701	EA	HINGE-TOP RH/BOTTOM LH(DOOR)	618511
3	121568-03-701	EA	BUSHING - HINGE PIN/GRAY	619671
4	121568-03-702	EA	DOOR LINER-UPR/WAFFLED/BLACK	619627 - SMALL WDL
5	120075-01-702	EA	CAP, (HINGE PLUG)	618160
6	121568-01-700	EA	RAIL - DOOR UPPER	618618
7	120075-01-705	EA	HINGE-TOP LH/BOTTOM RH(DOOR)	618510
8	121568-03-705	EA	STORAGE LATCH - GRAY	619648
9	121568-03-721	EA	HANDLE/DOOR UPPER RH SWING	621465
9	121568-03-722	EA	HANDLE/DOOR LOWER RH SWING	621469
10	121568-01-701	EA	BIN - DOOR WHITE-WAFFLED LNR	618619 WDL

CONTACT WINNEBAGO PART SALES FOR UNLISTED COMPONENT(S)

COPYRIGHT © 2009 WINNEBAGO INDUSTRIES INC.

CABINET & APPLIANCE GROUP (CONTINUED)

COMPONENT PARTS FOR CABINET & APPLIANCE LAYOUT (CONTINUED)

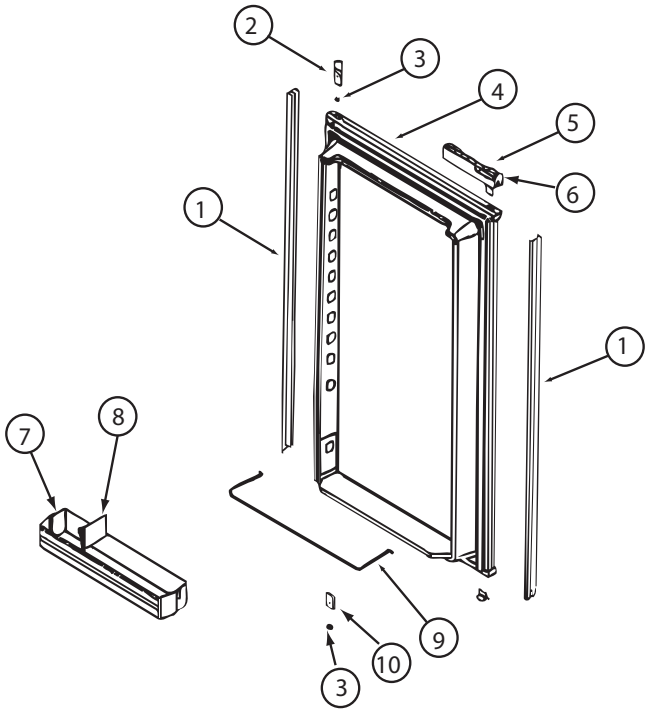

121568-06-01A, 121568-07-01A, 121568-08-01A (CONTINUED)

KEY	PART NUMBER	U/M	DESCRIPTION	VENDOR NO.
1	121568-03-706	EA	RETAINER-DOOR PNL/WAFFLE/BLK	619559-WDL-LOWER
2	120075-01-701	EA	HINGE-TOP RH/BOTTOM LH(DOOR)	618511
3	121568-03-701	EA	BUSHING - HINGE PIN/GRAY	619671
4	121568-03-707	EA	DOOR LINER-LWR/WAFFLED/B/TRM	619629
5	121568-03-722	EA	HANDLE/DOOR LOWER RH SWING	621469
6	121568-03-705	EA	STORAGE LATCH - GRAY	619648
7	121568-01-701	EA	BIN - DOOR WHITE-WAFFLED LNR	618619 WDL
9	121568-01-704	EA	RAIL - DOOR LOWER	618578
10	120075-01-705	EA	HINGE-TOP LH/BOTTOM RH(DOOR)	618510
			CONTACT WINNEBAGO PART SALES FOR UNLISTED COMPONENT(S)	

COPYRIGHT © 2009 WINNEBAGO INDUSTRIES INC.

CABINET & APPLIANCE GROUP (CONTINUED)

COMPONENT PARTS FOR CABINET & APPLIANCE LAYOUT (CONTINUED)

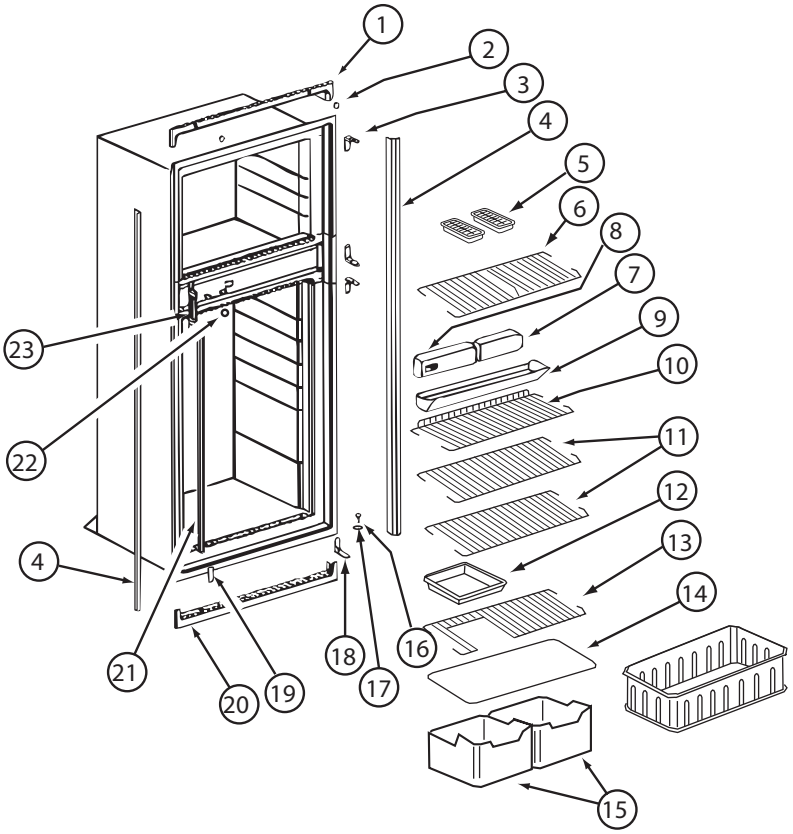

121568-06-01A, 121568-07-01A, 121568-08-01A (CONTINUED)

KEY	PART NUMBER	U/M	DESCRIPTION	VENDOR NO.
1	120075-01-713	EA	TRIM-TOP PIECE	619687
2	120075-01-714	EA	PLUG-HOLE (BLACK)	618170
3	121568-03-710	EA	HINGE/CABINET-TOP/RH-LWR/LH	619335 WAFFLED
4	121568-03-711	EA	TRIM - SIDE/BLACK	622295
6	121568-01-705	EA	SHELF - WIRE FREEZER	620250
7	121568-06-700	EA	FRONT BOX-N611	622002
8	121568-06-701	EA	CONTROL ASSY-OPTICAL/N611	621988 TO SN9056491
9	120075-01-720	EA	TRAY-DRIP	623250
9	120075-01-721	EA	LOUVER-DRIP TRAY	618176
11	121568-01-708	EA	SHELF - WIRE	620273
13	121568-01-707	EA	SHELF - WIRE - SHORT	620272
14	120075-01-725	EA	COVER-CRISPER - 18.5" WIDE	618158
15	121568-01-709	EA	CRISPER	618571
16	120075-01-727	EA	PIN-HINGE	618145
17	121568-03-701	EA	BUSHING - HINGE PIN/GRAY	619671
18	121568-03-715	EA	HINGE/CABINET-TOP/LH-LWR/RH	619336 WAFFLED
19	121568-03-716	EA	COVER - HINGE HOLES	619301
20	120075-01-729	EA	TRIM-BOTTOM PIECE	620958
21	121568-06-702	EA	CLIP - SHELF	61536522
22	121568-06-703	EA	HOLE PLUG - WHITE	620282
23	120075-01-732	EA	PLATE-STRIKE	618167

CONTACT WINNEBAGO PART SALES FOR UNLISTED COMPONENT(S)

COPYRIGHT © 2009 WINNEBAGO INDUSTRIES INC.

CABINET & APPLIANCE GROUP (CONTINUED)

COMPONENT PARTS FOR CABINET & APPLIANCE LAYOUT (CONTINUED)

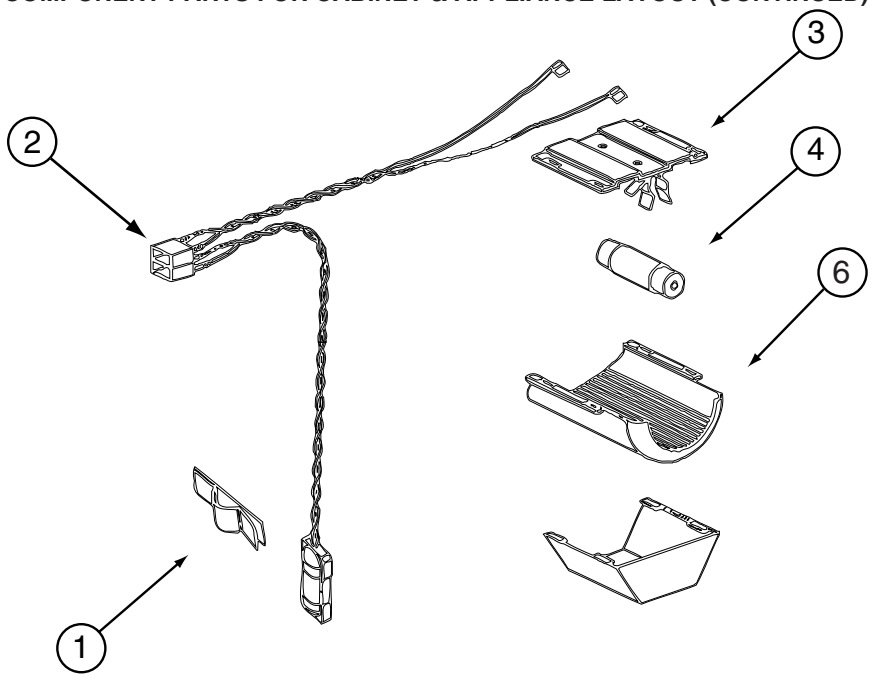

121568-03-01A, 121568-04-01A, 121568-05-01A, 121568-06-01A, 121568-07-01A, 121568-08-01A (CONTINUED)

KEY	PART NUMBER	U/M	DESCRIPTION	VENDOR NO.
1	084880-01-760	EA	CLIP (THERMISTER)	61689122
2	120075-01-735	EA	WIRE ASM - LAMP/THERMISTER	618548
3	084880-03-705	EA	BRACKET-LIGHT-INTERIOR	61629722
4	084880-03-706	EA	BULB-LAMP	61628922
6	084880-03-707	EA	COVER-LAMP, LENS	61627922
			CONTACT WINNEBAGO PART SALES FOR UNLISTED COMPONENT(S)	

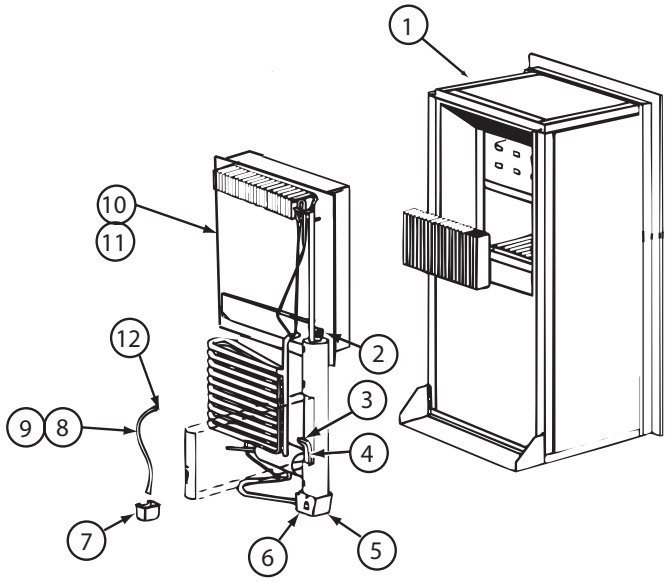

121568-06-01A, 121568-07-01A, 121568-08-01A (CONTINUED)

KEY	PART NUMBER	U/M	DESCRIPTION	VENDOR NO.
4	121568-06-704	EA	HEATER-AC/300W/120VAC	621702
10	120076-01-704	EA	COOLING UNIT, SERVICE PACK	618543
			CONTACT WINNEBAGO PART SALES FOR UNLISTED COMPONENT(S)	

COPYRIGHT © 2009 WINNEBAGO INDUSTRIES INC.

CABINET & APPLIANCE GROUP (CONTINUED)

COMPONENT PARTS FOR CABINET & APPLIANCE LAYOUT (CONTINUED)

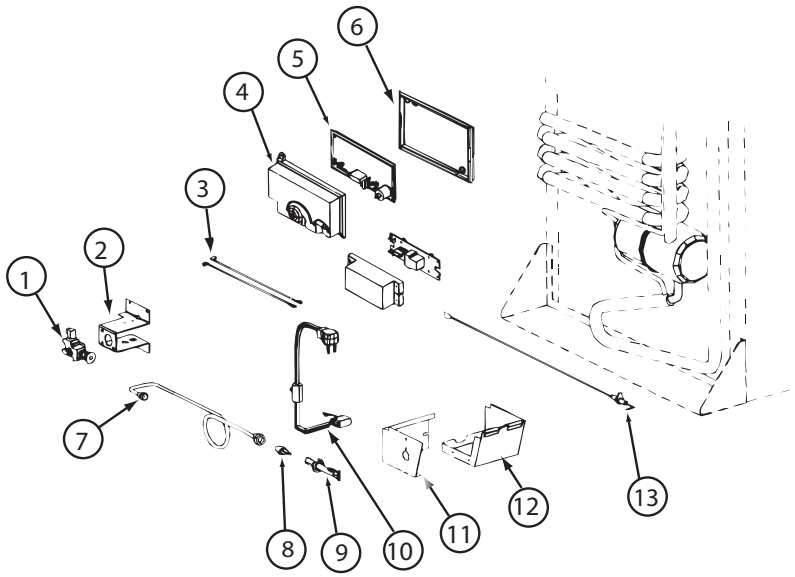

121568-06-01A, 121568-07-01A, 121568-08-01A (CONTINUED)

KEY	PART NUMBER	U/M	DESCRIPTION	VENDOR NO.
1	121568-06-705	EA	GAS VALVE/BRKT ASSY-COMBO	621439
1	121568-06-706	EA	GAS VALVE-COMBO/WRENCH FLAT	621329
4	120075-01-738	EA	COVER-POWER BOARD	618185
5	121568-06-707	EA	BOARD/POWER-N611	621991 = 621991001
6	120075-01-740	EA	BASE - POWER BOARD	618186
8	121568-06-708	EA	BURNER/ORFICE-ADAPTER KIT	621957
13	104137-06-715	EA	ELECTRODE-SPARK/SENSOR, SGL	61692222
	121569-08-704	EA	TUBE/BURNER - N8/N6	624682
			CONTACT WINNEBAGO PART SALES FOR UNLISTED COMPONENT(S)	

121568-05-01A, 121568-07-01A, 121568-08-01A (CONTINUED)

KEY	PART NUMBER	U/M	DESCRIPTION	VENDOR NO.
	121568-05-700	EA	FAN 12V KIT DBLE SIDEWALL	619020

COPYRIGHT © 2009 WINNEBAGO INDUSTRIES INC.

CABINET & APPLIANCE GROUP (CONTINUED)

COMPONENT PARTS FOR CABINET & APPLIANCE LAYOUT (CONTINUED)

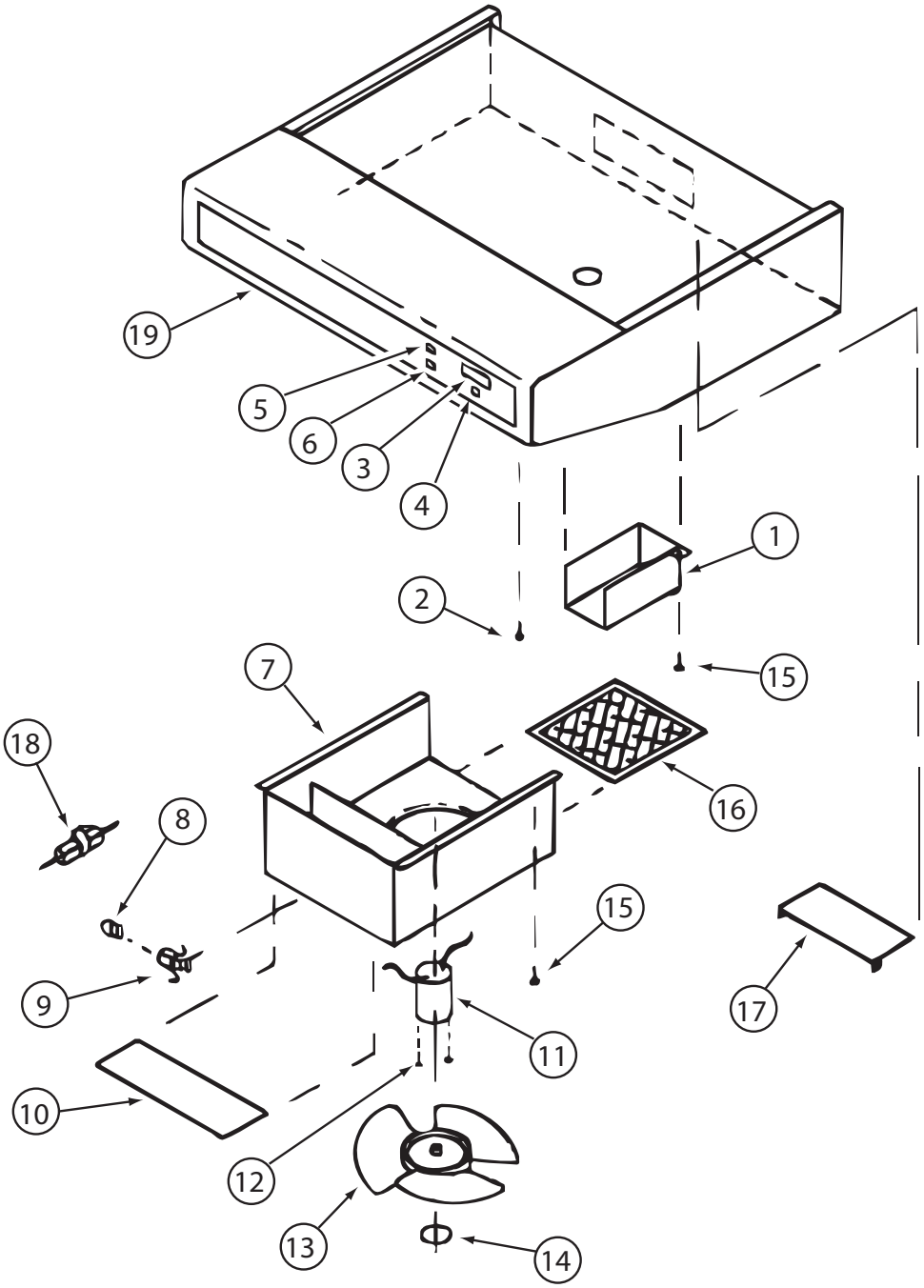

136354-05-01A, 136354-05-02A

KEY	PART NUMBER	U/M	DESCRIPTION	VENDOR NO.
3	100258-10-700	EA	GAUGE-HOUR METER, SCREW ON	L0150-00 WAS 150
4	096983-01-702	EA	SWITCH - MOM/OFF/MOM/3 TERM	L0112-00
5	096983-01-700	EA	SWITCH/1 SPEED -ON/OFF- BLK	L0108-00
8	117806-01-000	EA	BULB-12V NO.912 1.0 AMPS	GENERAL MOTOR HOMES
9	092696-01-710	EA	HOLDER-LAMP	CB0267-02
10	096983-01-708	EA	LENS-LAMP	CC0179
11	136354-05-700	EA	MOTOR-12 VOLT	VC0536-02
13	136354-05-701	EA	BLADE-FAN 7" DIA	VD0216-00
16	096983-01-707	EA	FILTER-MESH	CC0246-00
17	100258-01-701	EA	DAMPER ASSEMBLY (METAL FLAP)	CA0565-00
19	100258-01-700	EA	LABEL-HOOD NOSE	CC0428-00

CONTACT WINNEBAGO PART SALES FOR UNLISTED COMPONENT(S)

COPYRIGHT © 2009 WINNEBAGO INDUSTRIES INC.

CABINET & APPLIANCE GROUP (CONTINUED)

COMPONENT PARTS FOR CABINET & APPLIANCE LAYOUT (CONTINUED)

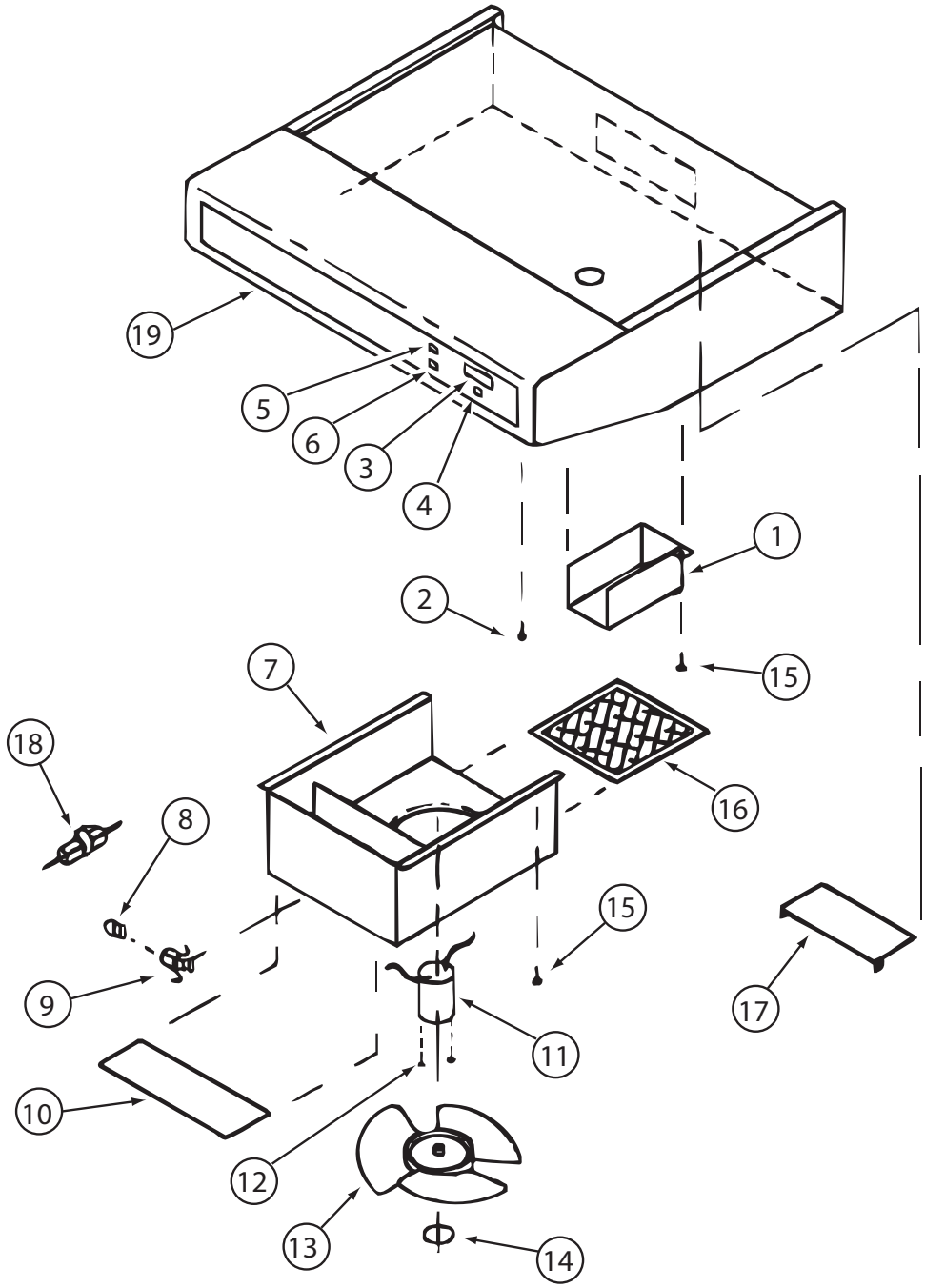

136354-06-01A, 136354-06-02A

KEY	PART NUMBER	U/M	DESCRIPTION	VENDOR NO.
3	100258-10-700	EA	GAUGE-HOUR METER, SCREW ON	L0150-00 WAS 150
4	096983-01-702	EA	SWITCH - MOM/OFF/MOM/3 TERM	L0112-00
5	096983-01-700	EA	SWITCH/1 SPEED -ON/OFF- BLK	L0108-00
8	117806-01-000	EA	BULB-12V NO.912 1.0 AMPS	GENERAL MOTOR HOMES
9	092696-01-710	EA	HOLDER-LAMP	CB0267-02
10	096983-01-708	EA	LENS-LAMP	CC0179
11	136354-06-700	EA	MOTOR - FAN (CSA)	VC0535-02
13	136354-05-701	EA	BLADE-FAN 7" DIA	VD0216-00
16	096983-01-707	EA	FILTER-MESH	CC0246-00
17	100258-01-701	EA	DAMPER ASSEMBLY (METAL FLAP)	CA0565-00
19	100258-01-700	EA	LABEL-HOOD NOSE	CC0428-00
			CONTACT WINNEBAGO PART SALES FOR UNLISTED COMPONENT(S)	

COPYRIGHT © 2009 WINNEBAGO INDUSTRIES INC.

CABINET & APPLIANCE GROUP (CONTINUED)

COMPONENT PARTS FOR CABINET & APPLIANCE LAYOUT (CONTINUED)

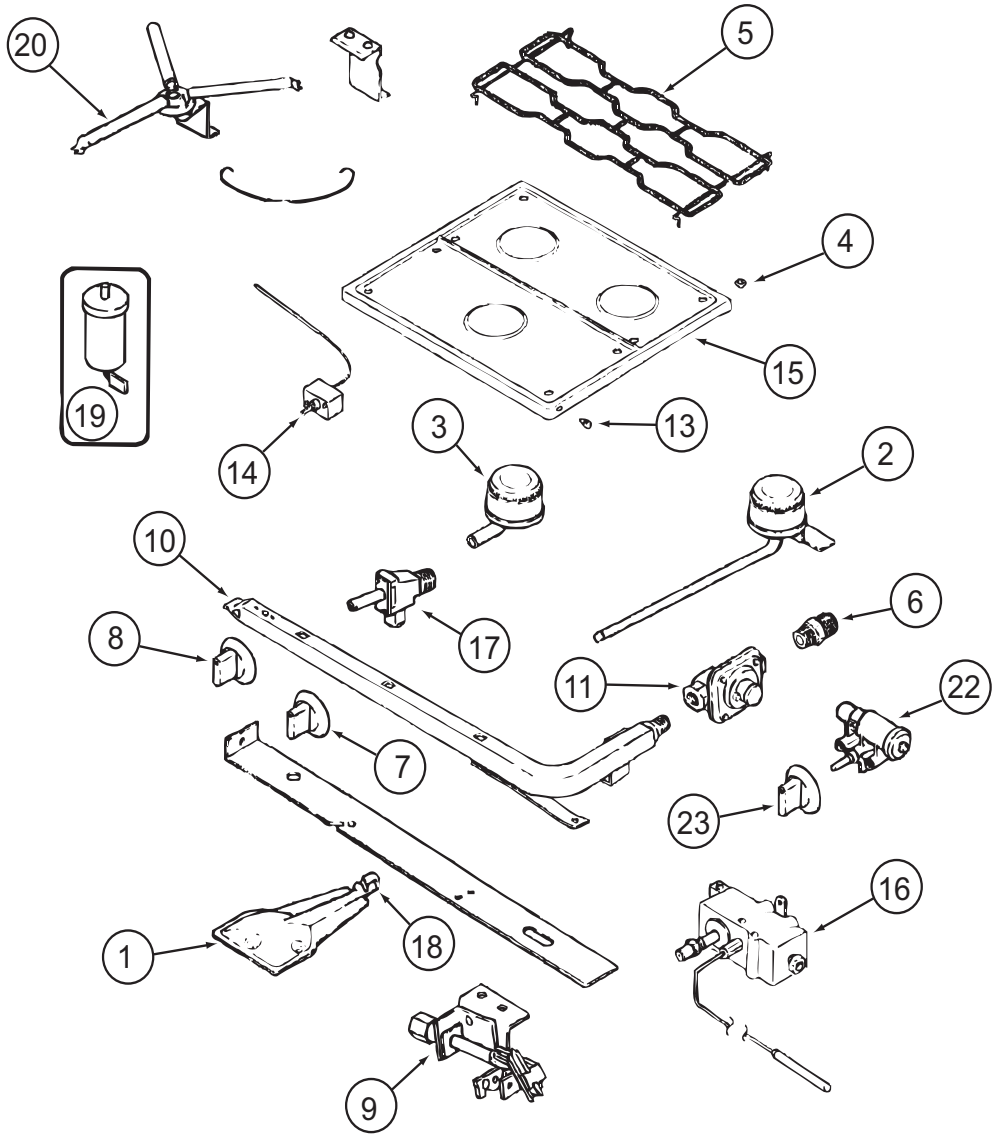

151277-01-01A, 151277-02-01A

COPYRIGHT © 2009 WINNEBAGO INDUSTRIES INC.

CABINET & APPLIANCE GROUP (CONTINUED)

COMPONENT PARTS FOR CABINET & APPLIANCE LAYOUT (CONTINUED)

151277-01-01A, 151277-02-01A (CONTINUED)

KEY	PART NUMBER	U/M	DESCRIPTION	VENDOR NO.
1	151279-02-700	EA	BURNER - OVEN - W/SHUTTER	74009853
2	112881-04-700	EA	BURNER - TOP/LEFT REAR	74004584
2	126023-01-700	EA	BURNER-TOP (RT-REAR) 5100BTU	74004583
3	112881-04-701	EA	BURNER - TOP/FRONT	74004582
4	102020-01-709	EA	BUMPER-GRATE	8007P020-60
5	112881-04-702	EA	GRATE - BLACK	74007277
6	135065-03-700	EA	FITTING - HALF UNION	74004234
7	128728-01-701	EA	KNOB - BURNER - REAR	74003941 (1 PER)
7	128728-01-702	EA	KNOB - BURNER - FRONT	74003942
8	151279-02-701	EA	KNOB - THERMOSTAT - BLACK	74009858
9	151279-01-700	EA	PILOT - BURNER - 16” SERIES	74009852
10	151279-02-702	EA	PIPE - MANIFOLD	74009856
11	112881-03-701	EA	REGULATOR KIT W/FITTINGS	12001285
13	102020-01-724	EA	BUMPER-MAIN TOP	8003P008-60
14	151279-02-703	EA	THERMOSTAT	74009855
15	151277-01-700	EA	TOP - MAIN (BLACK)	74007287
16	151279-02-704	EA	ELBOW BLOCK ASM (VALVE-OVEN)	74009864
17	151277-01-701	EA	VALVE/REAR - W/SET SCREW	12002254
17	151277-01-702	EA	VALVE/FRONT - W/SET SCREW	12002246
19	112881-04-705	EA	PUSH RING (ELECTRODE MTG)	7104P002-60
19	126023-01-711	EA	ELECTRODE - IGNITER (ONLY)	7432P077-60
20	126023-01-736	EA	FLASH TUBE EXTENSION (REAR)	74003326
20	126023-01-737	EA	FLASH TUBE EXTENSION (FRONT)	74003327
21	112881-04-708	EA	CLIP-FLASH TUBE	7112P068-60
22	126023-01-735	EA	KIT - IGNITOR TOP BRNER & KNOB	12001296=74002413&4
23	128728-01-707	EA	KNOB - IGNITOR	74003944
26	112881-04-709	EA	SHIELD-SPARK	3604F211-45

CONTACT WINNEBAGO PART SALES FOR UNLISTED COMPONENT(S)

COPYRIGHT © 2009 WINNEBAGO INDUSTRIES INC.

CABINET & APPLIANCE GROUP (CONTINUED)

COMPONENT PARTS FOR CABINET & APPLIANCE LAYOUT (CONTINUED)

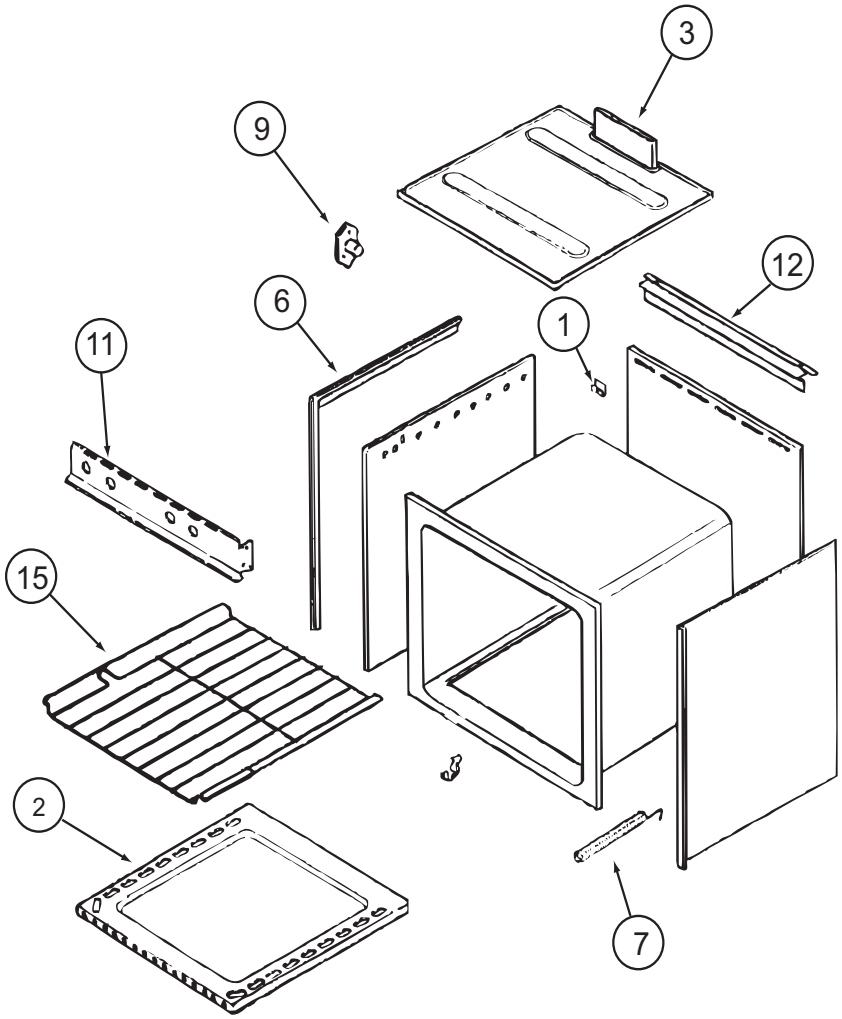

151277-01-01A (CONTINUED)

KEY	PART NUMBER	U/M	DESCRIPTION	VENDOR NO.
2	126023-01-731	EA	BOTTOM - OVEN	2205F016-19
3	126023-01-718	EA	FLUE BOX ASSEMBLY	4006W075-80
6	126023-01-713	EA	TRIM - SIDE (RIGHT) BLACK	74002827
6	126023-01-714	EA	TRIM - SIDE (LEFT) BLACK	74002828
7	135066-03-700	EA	SPRING - OVEN DOOR	74001835
9	128728-01-703	EA	PIN/T-NUT F/HINGE	7103P109-60
15	126023-01-716	EA	RACK - OVEN	74003106

CONTACT WINNEBAGO PART SALES FOR UNLISTED COMPONENT(S)

COPYRIGHT © 2009 WINNEBAGO INDUSTRIES INC.

CABINET & APPLIANCE GROUP (CONTINUED)

COMPONENT PARTS FOR CABINET & APPLIANCE LAYOUT (CONTINUED)

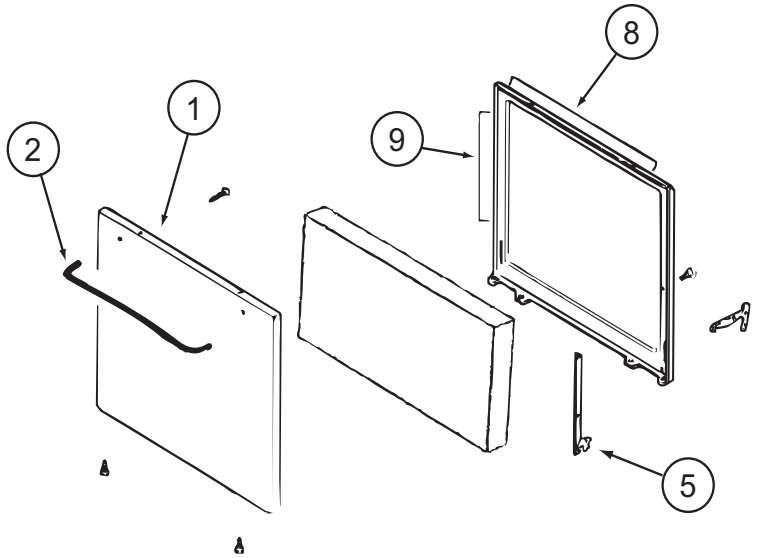

151277-01-01A (CONTINUED)

KEY	PART NUMBER	U/M	DESCRIPTION	VENDOR NO.
1	102022-01-704	EA	GLASS-OUTER	7902P261-60
1	112881-01-713	EA	DOOR/OVEN-TEXT/BLK NO WINDOW	2401F126-70
2	128727-01-701	EA	HANDLE - OVEN DOOR	74003929
5	151277-01-704	EA	HINGE KIT-OVEN DR/LT	12400028
5	151277-01-705	EA	HINGE KIT-OVEN DR/RT	12400029
8	126023-01-732	EA	SEAL/OVEN DR TOP	7212P014-60
9	135066-03-714	EA	SEAL - OVEN DOOR SIDES	7212P039-60
			CONTACT WINNEBAGO PART SALES FOR UNLISTED COMPONENT(S)	

172238-01-01A

KEY	PART NUMBER	U/M	DESCRIPTION	VENDOR NO.
	172238-01-700	EA	GLASS TRAY	78-HPGLASS-TBL
	172238-01-701	EA	TURN RING F/TRAY	78-HPTRNRING

COPYRIGHT © 2009 WINNEBAGO INDUSTRIES INC.

CHASSIS GROUP

FRAME

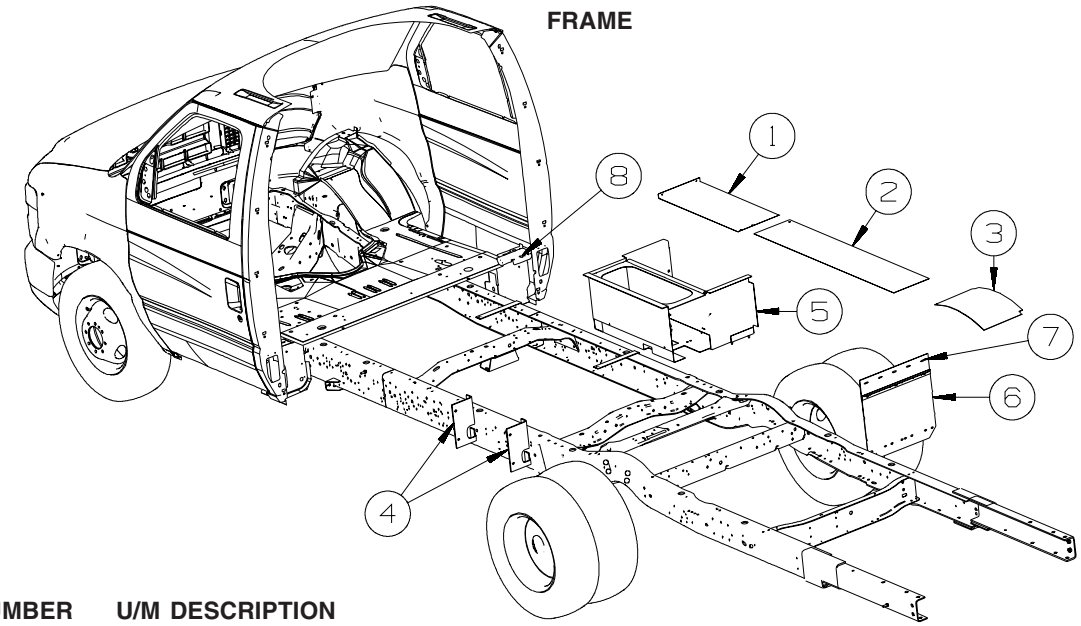

FORD CHASSIS

KEY	PART NUMBER	U/M	DESCRIPTION
1	135676-06-02B	EA	SHIELD - HEAT - E-COATED
	135676-17-02B	EA	
2	145027-01-02B	EA	SHIELD - HEAT - E-COATED
3	158704-01-02B	EA	SHIELD/HEAT - E-COATED
4	147847-04-02B	EA	BRACKET - LP SUPPORT - E-COATED
5	162352-01-02B	EA	BOX - ENTRANCE STEP - E-COATED
6	136391-02-02B	EA	GUARD/ROCK - STEEL - W/ANGLE - 18"W X 15"H - E-COATED
7	157464-02-02B	EA	BRACKET/MOUNTING - MUD GUARD - E-COATED
8	098408-01-000	FT	SEAL - SPONGE RUBBER - CLOSED CELL

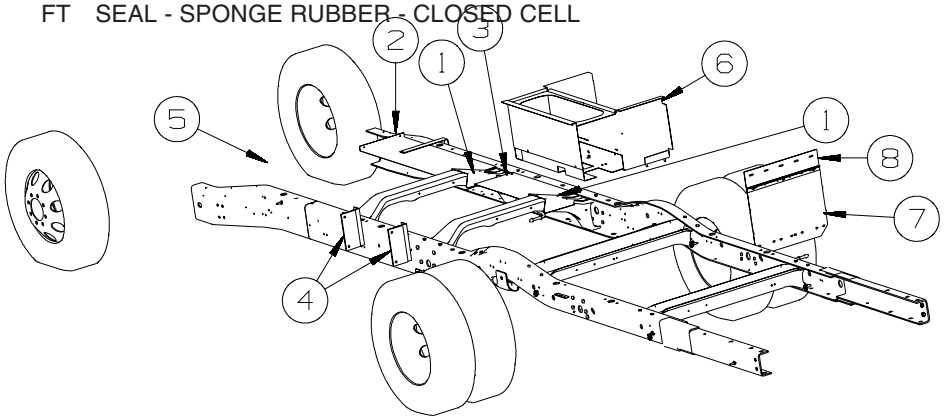

1PY CHEVY CHASSIS

KEY	PART NUMBER	U/M	DESCRIPTION
1	155694-01-02B	EA	SUPPORT/SHIELD - HEAT - E-COATED
2	135676-14-02B	EA	SHIELD - HEAT - E-COATED
3	145027-06-02B	EA	SHIELD - HEAT - E-COATED
4	136042-01-02B	EA	BRACKET - LP SUPPORT - E-COATED
5	098408-01-000	FT	SEAL - SPONGE RUBBER - CLOSED CELL
6	162352-01-02B	EA	BOX - ENTRANCE STEP - E-COATED
7	136391-02-02B	EA	GUARD/ROCK - STEEL - W/ANGLE - 18"W X 15"H - E-COATED
8	157464-02-02B	EA	BRACKET/MOUNTING - MUD GUARD - E-COATED

COPYRIGHT © 2009 WINNEBAGO INDUSTRIES INC.

CHASSIS GROUP (CONTINUED)

1PY CHEVY CHASSIS

EXHAUST

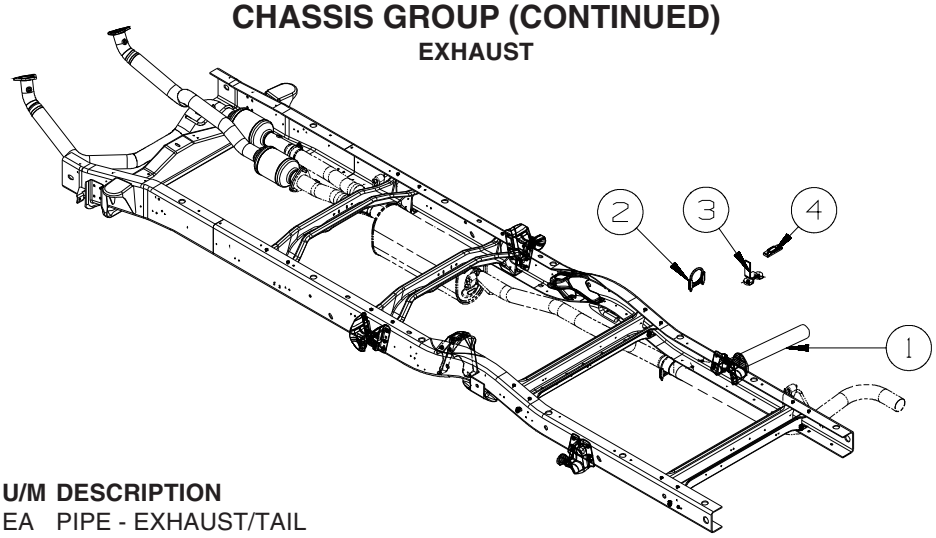

KEY	PART NUMBER	U/M	DESCRIPTION
1	155696-01-000	EA	PIPE - EXHAUST/TAIL
2	094918-06-000	EA	CLAMP - EXHAUST - 3" - HEAVY DUTY
3	117380-05-02B	EA	HANGER - TAILPIPE - E-COATED
4	095190-01-000	EA	HANGER - EXHAUST - 4" X 1.4"

HITCH

KEY	PART NUMBER	U/M	DESCRIPTION
	170943-04-04B	EA	HITCH RECEIVER/DRAWBAR - BLACK
	172243-01-01A	EA	LABEL - HITCH RATING - CLASS 3 - 5000/500 - WHT BLK

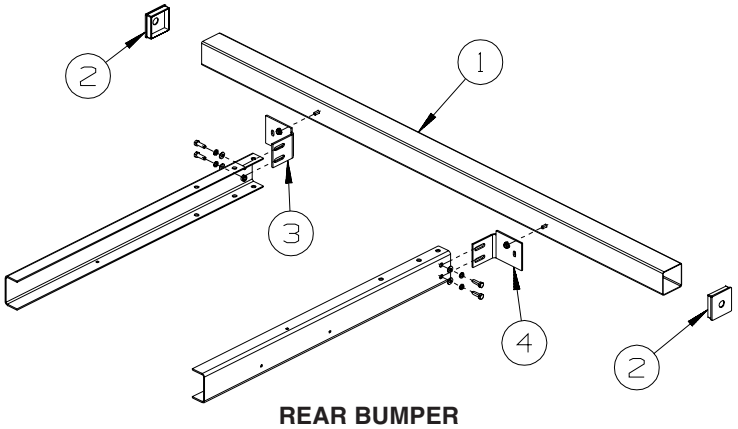

REAR BUMPER

KEY	PART NUMBER	U/M	DESCRIPTION
1	103422-05-02A	EA	BUMPER - REAR - SQUARE ALUMINUM - 97.3" - BRIGHT WHITE
2	039779-01-000	EA	CAP - BUMPER - RUBBER - 4" X 4" - BLACK
3	138811-01-02B	EA	SUPPORT/ANGLE - REAR BUMPER - E-COATED
4	138811-02-02B	EA	SUPPORT/ANGLE - REAR BUMPER - E-COATED
	038327-01-000	EA	TAPE - ANTI-SLIP - 2” X 60’

COPYRIGHT © 2009 WINNEBAGO INDUSTRIES INC.

CHASSIS GROUP (CONTINUED)

FUEL

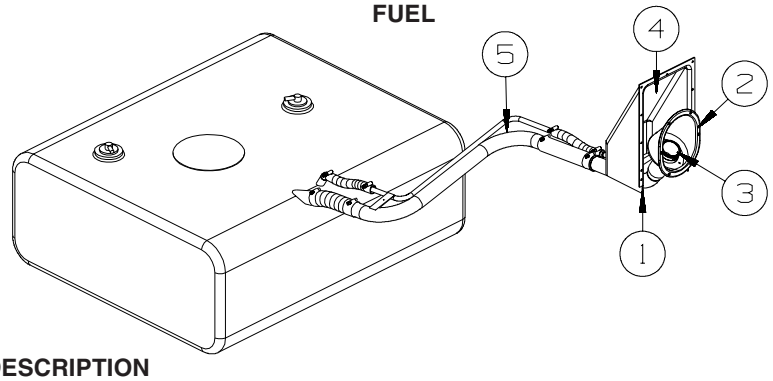

FORD CHASSIS

KEY	PART NUMBER	U/M	DESCRIPTION
1	099069-01-000	FT	SEAL - RUBBER - CLOSED SPONGE - .5" WIDE X .12" THICK-BLK
2	127291-02-01A	EA	SHROUD - FUEL FILL - BRIGHT WHITE
3	078200-01-000	EA	GASKET - FUEL FILL - 3.5"OD X 2"ID
4	135557-02-01A	EA	SHROUD - FUEL FILL - UPPER - 13.5" X 8.2"
	135557-01-01A	EA	SHROUD - FUEL FILL - UPPER - 16" X 8.2"
5	148650-03-000	EA	NECK - FILLER/MAIN/EXTENSION

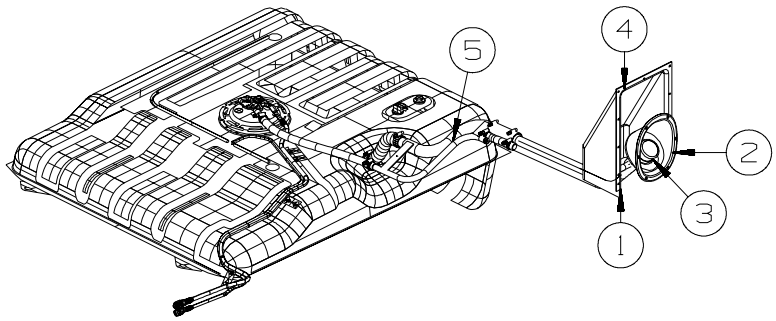

1PY CHEVY CHASSIS

KEY	PART NUMBER	U/M	DESCRIPTION
1	099069-01-000	FT	SEAL - RUBBER - CLOSED SPONGE - .5" WIDE X .12" THICK-BLK
2	095854-01-04A	EA	SHROUD - FUEL FILL - RADIUS - BRIGHT WHITE
3	078200-01-000	EA	GASKET - FUEL FILL - 3.5"OD X 2"ID
4	135557-02-01A	EA	SHROUD - FUEL FILL - UPPER - 13.5" X 8.2"
	135557-01-01A	EA	SHROUD - FUEL FILL - UPPER - 16" X 8.2"
5	159845-02-000	EA	NECK - FILLER/MAIN/EXTENSION

COPYRIGHT © 2009 WINNEBAGO INDUSTRIES INC.

CHASSIS GROUP (CONTINUED)

SPARE TIRE

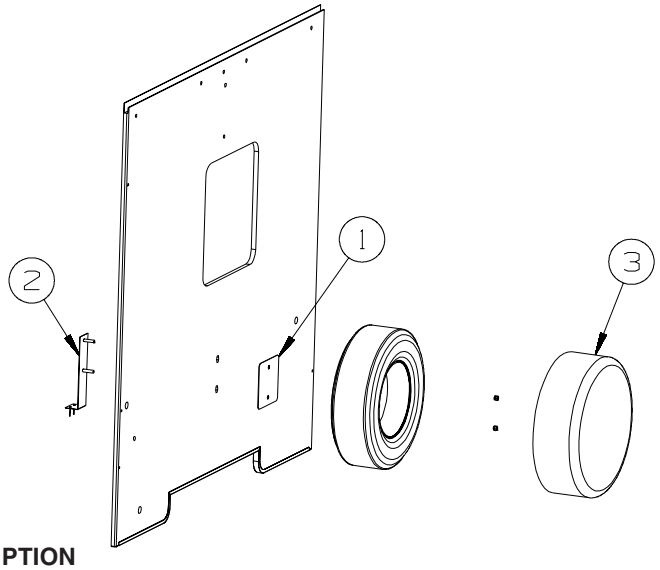

KEY	PART NUMBER	U/M	DESCRIPTION
1	105208-01-000	EA	PLATE - SPARE TIRE
2	160058-03-02B	EA	BRACKET - SPARE TIRE - E-COATED
3	073322-09-S01	EA	COVER - TIRE - 30"
	073322-50-000	EA	COVER - UNIVERSAL LINER
	155645-01-000	EA	VALVE STEM - 1.25"

WHEEL, TIRE, COVERS &/OR LINERS

KEY	PART NUMBER	U/M	DESCRIPTION
	077030-01-000	EA	EXTENSION - VALVE STEM - 1.25" - METAL
	077030-10-000	EA	EXTENSION - VALVE STEM - .50" - METAL - 1PY
	095012-05-000	EA	EXTENSION/VALVE STEM - LIVE - 5"
	095012-09-000	EA	EXTENSION/VALVE STEM - LIVE - 7.7" - 1PY
	095012-07-000	EA	STABILIZER/VALVE EXTENSION - LIVE - 4"
*	109443-05-000	EA	WHEEL COVER SET - GM 16" STAINLESS/8 LUG (1 SET=4 COVERS)
*	110435-23-000	EA	LINER - WHEEL(SET OF 4) - 4 OVAL HOLES - 07'FORD E350/E450
	112358-01-000	EA	WRENCH - LUG - 7/8" - L-SHAPE - 1PY

***COMPONENT PARTS LISTED LATER IN THIS GROUP**

COMPONENT PARTS FOR WHEEL, TIRE, COVERS &/OR LINERS

109443-05-000

KEY	PART NUMBER	U/M	DESCRIPTION	VENDOR NO.
	098532-01-700	EA	COVER-FAKE LUG NUT (PLASTIC)	SHAU-LNC
	109443-05-700	EA	WHEEL COVER - 16"SS EA=1	SHFM16-CVR

110435-23-000

KEY	PART NUMBER	U/M	DESCRIPTION	VENDOR NO.
	110435-01-711	EA	DECAL-CENTER CAP- 2" - QTY 2	DIAMOND/2 PER BAG
	110435-23-700	EA	COVER/WHEEL - FRONT - 1 ONLY	FL60-59-FWC
	110435-23-701	EA	COVER/WHEEL - REAR - 1 ONLY	RWCFL60-59

COPYRIGHT © 2009 WINNEBAGO INDUSTRIES INC.

CURTAIN & CUSHION GROUP

CURTAIN & CUSHION LAYOUT

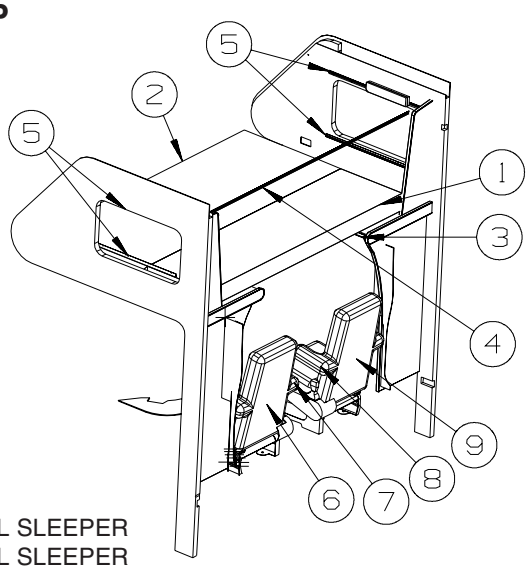

KEY	PART NUMBER	U/M	DESCRIPTION
1	157657-04-Y01	EA	CUSHION - OVERHEAD BUNK/REAR - 27" X 80" X 5"-DBL SLEEPER
1	157657-04-Y02	EA	CUSHION - OVERHEAD BUNK/REAR - 27" X 80" X 5"-DBL SLEEPER
1	157657-04-Y03	EA	CUSHION - OVERHEAD BUNK/REAR - 27" X 80" X 5"-DBL SLEEPER
	157657-A4-Y01	EA	COVER - CUSHION/OVERHEAD BUNK/REAR-27" X 80" X 5"-DBL SLP
	157657-A4-Y02	EA	COVER - CUSHION/OVERHEAD BUNK/REAR-27" X 80" X 5"-DBL SLP
	157657-A4-Y03	EA	COVER - CUSHION/OVERHEAD BUNK/REAR-27" X 80" X 5"-DBL SLP
2	157657-18-Y01	EA	CUSHION - OVERHEAD BUNK-32.5" X 80" X 6"-W/ANGLE-DBL SLP
2	157657-18-Y02	EA	CUSHION - OVERHEAD BUNK-32.5" X 80" X 6"-W/ANGLE-DBL SLP
2	157657-18-Y03	EA	CUSHION - OVERHEAD BUNK-32.5" X 80" X 6"-W/ANGLE-DBL SLP
	157657-B8-Y01	EA	COVER-CUSHION/OVRHD/FRT BNK-32.5"X80"X6"-DBL ANGLE/DBL SLP
	157657-B8-Y02	EA	COVER-CUSHION/OVRHD/FRT BNK-32.5"X80"X6"-DBL ANGLE/DBL SLP
	157657-B8-Y03	EA	COVER-CUSHION/OVRHD/FRT BNK-32.5"X80"X6"-DBL ANGLE/DBL SLP
3	076892-36-W29	EA	CURTAIN - CAB PRIVACY - 47.5" X 74" (Y01, Y02)
3	076892-36-Y03	EA	CURTAIN - CAB PRIVACY - 47.5" X 74" (Y03)
3	076892-41-W29	EA	CURTAIN - CAB PRIVACY - 47.5" X 74" (Y01, Y02) - 1L9
3	076892-41-Y03	EA	CURTAIN - CAB PRIVACY - 47.5" X 74" (Y03) - 1L9
4	101668-80-W29	EA	CURTAIN - TAPE TOP - 27" X 90" (Y01, Y02)
4	101668-80-Y03	EA	CURTAIN - TAPE TOP - 27" X 90" (Y03)
4	105450-15-01A	EA	TRACK - CURTAIN - 82.3" - OFF WHITE
4	073260-23-W29	EA	TIEBACK - 3" X 18" (Y01, Y02)
4	073260-23-Y03	EA	TIEBACK - 3" X 18" (Y03)
5	161091-08-Y01	EA	CURTAIN - PRIVACY - 19.5" X 35"
5	161091-07-Y02	EA	CURTAIN - PRIVACY - 19.5" X 35"
5	161091-08-Y03	EA	CURTAIN - PRIVACY - 19.5" X 35"
5	156172-02-01A	EA	TRACK/WALL - 32" - BONE
5	156172-04-01A	EA	END CAP - WALL TRACK - CLEAR
6	158708-03-Y31	EA	COVER - BACK (Y01, Y03) - 091
6	158708-03-Y02	EA	COVER - BACK (Y02) - 091
6	159513-03-Y01	EA	COVER - BACK - LEATHER (Y01, Y03) - 091/1PY
6	159513-03-Y02	EA	COVER - BACK - LEATHER (Y02) - 091/1PY
6	158708-04-Y31	EA	COVER - SEAT - DRIVER (Y01, Y03) - 091
6	158708-04-Y02	EA	COVER - SEAT - DRIVER (Y02) - 091
6	159513-04-Y01	EA	COVER - SEAT - LEATHER (Y01, Y03) - 091/1PY
6	159513-04-Y02	EA	COVER - SEAT - LEATHER (Y02) - 091/1PY
7	158708-05-Y31	EA	COVER - ARMREST/DRIVER (Y01, Y03) - 091
7	158708-05-Y02	EA	COVER - ARMREST/DRIVER (Y02) - 091
7	159513-05-Y01	EA	COVER - ARMREST/DRIVER - LEATHER (Y01, Y03) - 091/1PY
7	159513-05-Y02	EA	COVER - ARMREST/DRIVER - LEATHER (Y02) - 091/1PY
8	158708-06-Y31	EA	COVER - ARMREST/PASSENGER (Y01, Y03) - 091
8	158708-06-Y02	EA	COVER - ARMREST/PASSENGER (Y02) - 091
8	159513-06-Y01	EA	COVER - ARMREST/PASSENGER - LEATHER (Y01, Y03) - 091/1PY
8	159513-06-Y02	EA	COVER - ARMREST/PASSENGER - LEATHER (Y02) - 091/1PY
9	158708-03-Y31	EA	COVER - BACK (Y01, Y03) - 091
9	158708-03-Y02	EA	COVER - BACK (Y02) - 091
9	159513-03-Y01	EA	COVER - BACK - LEATHER (Y01, Y03) - 091/1PY
9	159513-03-Y02	EA	COVER - BACK - LEATHER (Y02) - 091/1PY
9	158708-07-Y31	EA	COVER - SEAT - PASSENGER (Y01, Y03) - 091
9	158708-07-Y02	EA	COVER - SEAT - PASSENGER (Y02) - 091
9	159513-04-Y01	EA	COVER - SEAT - LEATHER (Y01, Y03) - 091/1PY
9	159513-04-Y02	EA	COVER - SEAT - LEATHER (Y02) - 091/1PY

COPYRIGHT © 2009 WINNEBAGO INDUSTRIES INC.

CURTAIN & CUSHION GROUP (CONTINUED)

CURTAIN & CUSHION LAYOUT (CONTINUED)

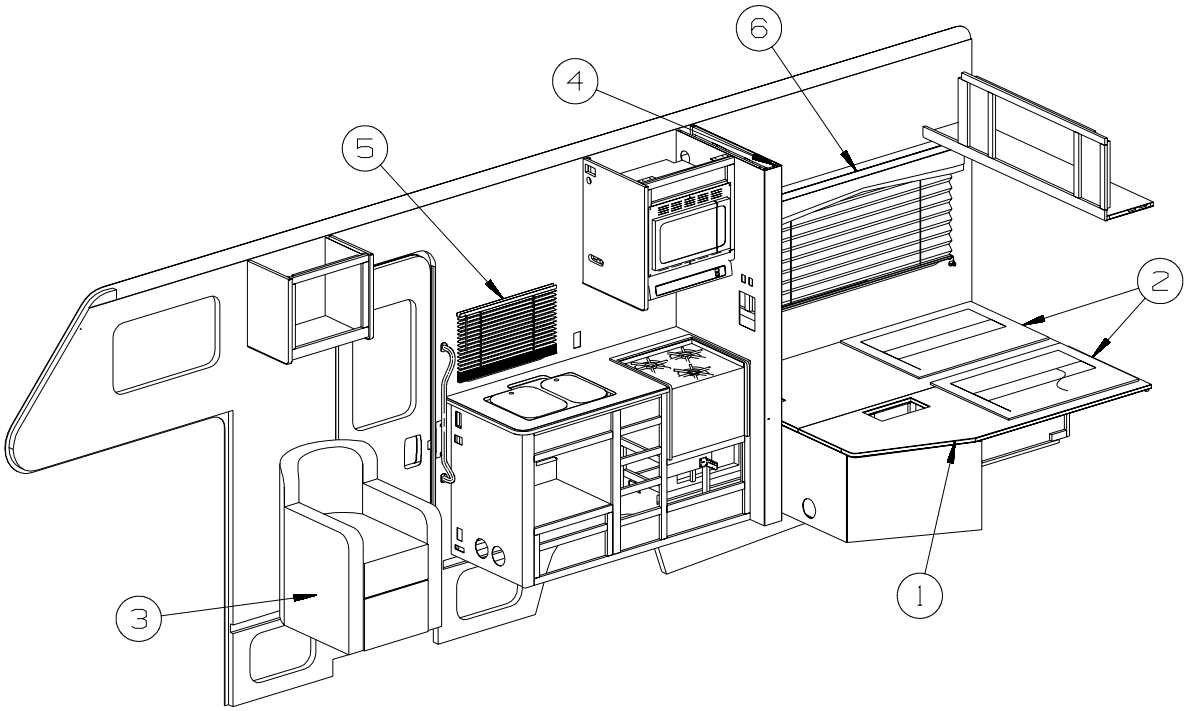

KEY	PART NUMBER	U/M	DESCRIPTION
1	154510-06-Y01	EA	COVER - MATTRESS/FITTED - 59" X 74" - W/CUT CORNER
1	154510-06-Y02	EA	COVER - MATTRESS/FITTED - 59" X 74" - W/CUT CORNER
1	154510-06-Y03	EA	COVER - MATTRESS/FITTED - 59" X 74" - W/CUT CORNER
2	163013-01-Y01	EA	PILLOW - W/SHAM
2	163013-01-Y02	EA	PILLOW - W/SHAM
2	163013-01-Y03	EA	PILLOW - W/SHAM
3	157947-05-Y01	EA	CHAIR - LOUNGE - W/PEDESTAL
3	157947-05-Y02	EA	CHAIR - LOUNGE - W/PEDESTAL
3	157947-12-Y03	EA	CHAIR - LOUNGE - W/PEDESTAL
4	101668-53-Y01	EA	CURTAIN - TAPE TOP - 70" X 60"
4	101668-53-Y02	EA	CURTAIN - TAPE TOP - 70" X 60"
4	101668-53-Y03	EA	CURTAIN - TAPE TOP - 70" X 60"
	073260-65-Y01	EA	TIEBACK - 4" X 15"
	073260-65-Y02	EA	TIEBACK - 4" X 15"
	073260-65-Y03	EA	TIEBACK - 4" X 15"
5	109041-57-02A	EA	BLIND - MINI - 26" X 17"
	109353-04-000	EA	CLIP - VALANCE SLAT MOUNTING - CLEAR PLASTIC
	109441-01-000	EA	BRACKET/HOOK - BLIND HOLD DOWN - LARGE - CLEAR
	162496-01-01A	EA	BRACKET/BLIND - LEFT SIDE WHEN FACING WINDOW - CLEAR
	162496-02-01A	EA	BRACKET/BLIND - RIGHT SIDE WHEN FACING WINDOW - CLEAR
	169068-01-01A	EA	BRACKET - (CLEAT TYPE) - F/BLIND HOLD DOWN - MILKY WHITE
6	158536-04-Y01	EA	VALANCE - ROSEMONT - 54"
6	158536-50-Y02	EA	VALANCE - ROSEMONT - 54"
6	158536-04-Y03	EA	VALANCE - ROSEMONT - 54"
6	157506-07-W23	EA	BLIND - PLEATED - 51" X 27" (Y01, Y02) FROM: 00-00-00 THRU: 05-25-08
6	157506-07-Y01	EA	BLIND - PLEATED - 51" X 27" (Y01, Y02) FROM: 05-26-08 THRU: 99-99-99
6	157506-07-Y03	EA	BLIND - PLEATED - 51" X 27" (Y03)
	097565-01-000	EA	BRACKET - MOUNTING - PLEATED BLIND

COPYRIGHT © 2009 WINNEBAGO INDUSTRIES INC.

CURTAIN & CUSHION GROUP (CONTINUED)

CURTAIN & CUSHION LAYOUT (CONTINUED)

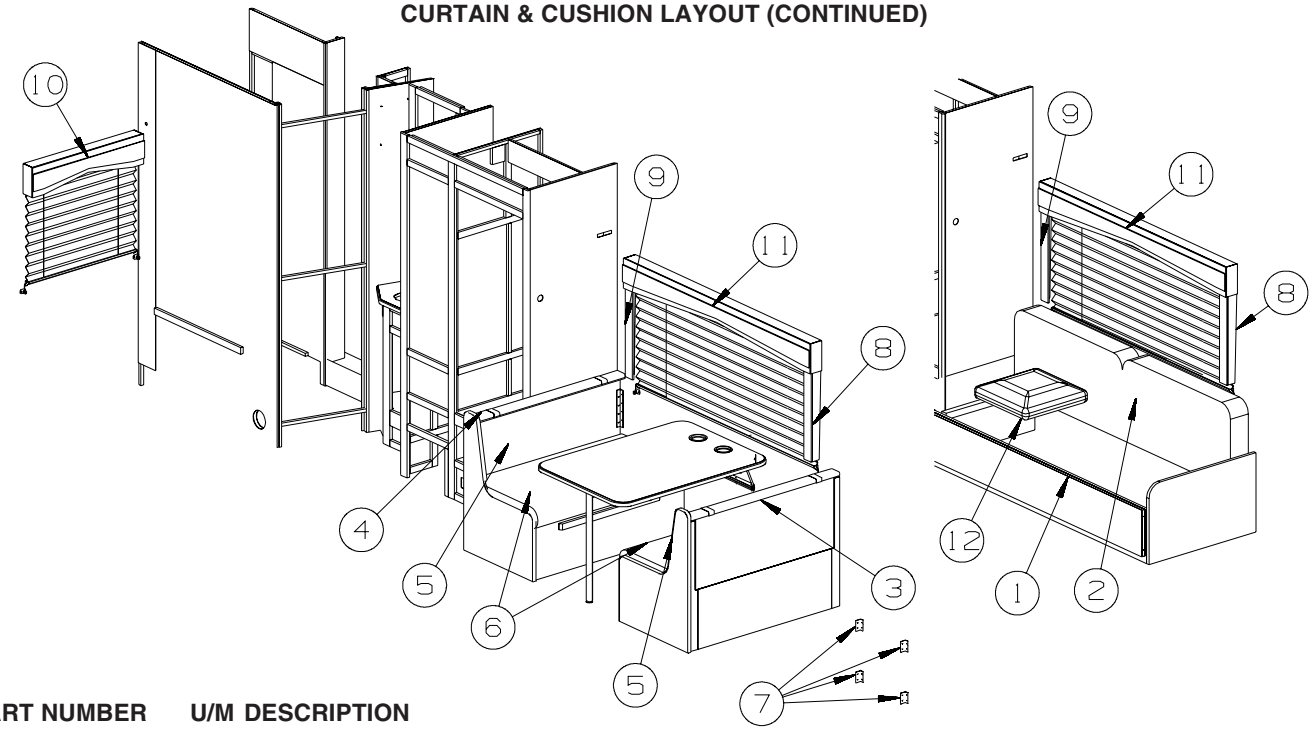

KEY	PART NUMBER	U/M	DESCRIPTION
1	149812-01-Y01	EA	SEAT - SOFA/BED - 74"
1	149812-01-Y02	EA	SEAT - SOFA/BED - 74"
1	149812-01-Y03	EA	SEAT - SOFA/BED - 74"
	P49812-01-Y01	EA	COVER - SEAT - SOFA/BED - 74"
	P49812-01-Y02	EA	COVER - SEAT - SOFA/BED - 74"
	P49812-01-Y03	EA	COVER - SEAT - SOFA/BED - 74"
	101085-04-000	EA	FRAME - SEAT - SOFA/BED - 74.75"
	101085-06-000	EA	FRAME - BASE - SOFA/BED - 74.75"
2	161040-07-Y01	EA	BACK - SOFA/BED - 74"
2	161040-07-Y02	EA	BACK - SOFA/BED - 74"
2	161040-07-Y03	EA	BACK - SOFA/BED - 74"
	101085-10-000	EA	FRAME - BACK - SOFA/BED - 74.5" X 16"
	161040-A7-Y01	EA	COVER - BACK - SOFA/BED - 74"
	161040-A7-Y02	EA	COVER - BACK - SOFA/BED - 74"
	161040-A7-Y03	EA	COVER - BACK - SOFA/BED - 74"
3	153519-19-Y01	EA	PAD - TOP/RH - F/DINETTE BACK - FABRIC COVERED
3	153519-19-Y02	EA	PAD - TOP/RH - F/DINETTE BACK - FABRIC COVERED
3	153519-19-Y03	EA	PAD - TOP/RH - F/DINETTE BACK - FABRIC COVERED
4	153519-20-Y01	EA	PAD - TOP/LH - F/DINETTE BACK - FABRIC COVERED
4	153519-20-Y02	EA	PAD - TOP/LH - F/DINETTE BACK - FABRIC COVERED
4	153519-20-Y03	EA	PAD - TOP/LH - F/DINETTE BACK - FABRIC COVERED
5	153670-01-Y01	EA	CUSHION - SEAT BACK - 13.5" X 42" X 5"
5	153670-01-Y02	EA	CUSHION - SEAT BACK - 13.5" X 42" X 5"
5	153670-12-Y03	EA	CUSHION - SEAT BACK - 13.5" X 42" X 5"
	P53670-01-Y01	EA	COVER/BACK - 13.5" X 42" X 5"
	P53670-01-Y02	EA	COVER/BACK - 13.5" X 42" X 5"
	P53670-12-Y03	EA	COVER/BACK - 13.5" X 42" X 5"
6	153671-03-Y01	EA	CUSHION - SEAT - 23" X 42" X 5"
6	153671-03-Y02	EA	CUSHION - SEAT - 23" X 42" X 5"
6	153671-03-Y03	EA	CUSHION - SEAT - 23" X 42" X 5"
	153671-A3-Y01	EA	COVER/CUSHION - SEAT - 23" X 42" X 5"
	153671-A3-Y02	EA	COVER/CUSHION - SEAT - 23" X 42" X 5"
	153671-A3-Y03	EA	COVER/CUSHION - SEAT - 23" X 42" X 5"
7	156732-01-02A	EA	BRACE - ANGLE - 2.5" - OFF WHITE
8	152445-R7-Y01	EA	LEG - RIGHT - 30"
8	152445-R7-Y02	EA	LEG - RIGHT - 30"
8	152445-R7-Y03	EA	LEG - RIGHT - 30"
9	152445-R8-Y01	EA	LEG - LEFT - 30"
9	152445-R8-Y02	EA	LEG - LEFT - 30"
9	152445-R8-Y03	EA	LEG - LEFT - 30"

COPYRIGHT © 2009 WINNEBAGO INDUSTRIES INC.

CURTAIN & CUSHION GROUP (CONTINUED)

CURTAIN & CUSHION LAYOUT (CONTINUED)

KEY	PART NUMBER	U/M	DESCRIPTION
10	158536-07-Y01	EA	VALANCE - ROSEMONT - 31"
10	158536-31-Y02	EA	VALANCE - ROSEMONT - 31"
10	158536-07-Y03	EA	VALANCE - ROSEMONT - 31"
10	157506-15-W07	EA	BLIND - PLEATED - 30" X 28" (Y01, Y02)
			FROM: 00-00-00 THRU: 05-25-08
10	157506-15-Y01	EA	BLIND - PLEATED - 30" X 28" (Y01, Y02)
			FROM: 05-26-08 THRU: 99-99-99
10	157506-15-Y03	EA	BLIND - PLEATED - 30" X 28" (Y03)
	097565-01-000	EA	BRACKET - MOUNTING - PLEATED BLIND
11	158536-42-Y01	EA	VALANCE - ROSEMONT - 64"
11	158536-42-Y02	EA	VALANCE - ROSEMONT - 64"
11	158536-43-Y03	EA	VALANCE - ROSEMONT - 64"
11	157506-16-W07	EA	BLIND - PLEATED - 61" X 30" (Y01, Y02)
			FROM: 00-00-00 THRU: 05-25-08
11	157506-16-YS1	EA	BLIND - PLEATED - 61" X 30" (Y01, Y02)
			FROM: 05-26-08 THRU: 99-99-99
11	157506-16-Y03	EA	BLIND - PLEATED - 61" X 30" (Y03)
	097565-01-000	EA	BRACKET - MOUNTING - PLEATED BLIND
12	145245-06-Y01	EA	PILLOW - 17" W/1/4" WELT
12	145245-06-Y02	EA	PILLOW - 17" W/1/4" WELT
12	145245-05-Y03	EA	PILLOW - 17" W/1/4" WELT

LOUNGE CHAIR

KEY	PART NUMBER	U/M	DESCRIPTION
	157947-A1-Y01	EA	COVER/CHAIR - GLIDER
	157947-A1-Y02	EA	COVER/CHAIR - GLIDER
	157947-A7-Y03	EA	COVER/CHAIR - GLIDER
	133408-07-000	EA	TOP PLATE - W/O BAR
	131566-04-000	EA	SLIDE/SEAT - HEAVY DUTY LOCKING - 5"
	108049-02-000	EA	CLIP - CABLE/PEDESTAL
	108049-04-000	EA	CABLE - W/MINI LEVER ACTION SWITCH - 28" SHEATH/30" CABLE
1	117125-01-02B	EA	BRACKET - CABLE MOUNT - ADJUSTER W/LOCK
2	119952-07-000	EA	WIRE - LATCH RELEASE/ROTARY
3	163810-01-01B	EA	SUPPORT BAR - W/PEDESTAL
	107921-06-000	EA	BEARING KIT - PEDESTAL

COPYRIGHT © 2009 WINNEBAGO INDUSTRIES INC.

CURTAIN & CUSHION GROUP (CONTINUED)

HARDWARE

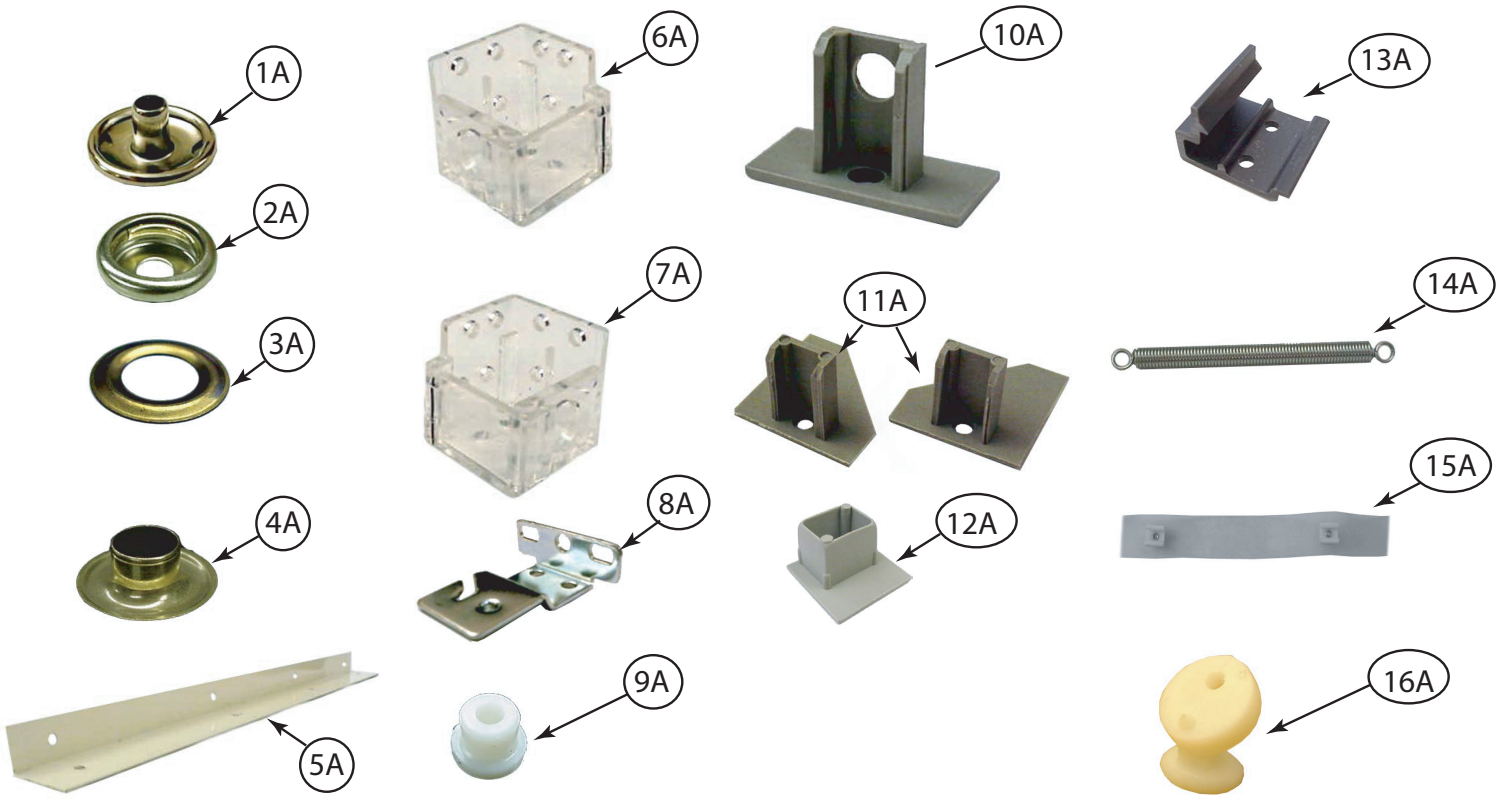

KEY	PART NUMBER	U/M	DESCRIPTION
1A	029155-01-000	EA	CAP - SNAP - 5/32" OUTSIDE DIAMETER OF PIN
2A	029156-01-000	EA	SOCKET - SNAP - 9/16" O.D.
3A	046867-05-000	EA	WASHER - #0
4A	046867-04-000	EA	GROMMET - #0
5A	160457-01-01A	EA	BRACE - VALANCE - L-SHAPED - 20" - OFF WHITE
6A	162496-01-01A	EA	BRACKET/BLIND - LEFT SIDE WHEN FACING WINDOW - CLEAR
7A	162496-02-01A	EA	BRACKET/BLIND - RIGHT SIDE WHEN FACING WINDOW - CLEAR
8A	084434-01-000	EA	BRACKET - MOUNTING - ROLLER SHADE - 1 3/8"
9A	094896-02-000	EA	GROMMET - CORD/PLEATED BLIND - NYLON - GRAY
10A	094907-02-000	EA	END CAP - PLEATED BLIND/TOP - RH/LH - GRAY PLASTIC
11A	094907-04-000	EA	END CAP - PLEATED BLIND/BOTTOM - RH/LH
12A	094907-09-000	EA	END CAP/BLIND - CENTER RAIL - RH/LH
13A	097565-01-000	EA	BRACKET - MOUNTING - PLEATED BLIND
14A	155748-01-000	EA	SPRING - EXTENSION - DAY/NIGHTER BLIND
15A	101031-01-000	YD	TAPE/GLIDE - 4.25" SPACING
16A	169068-01-01A	EA	BRACKET - (CLEAT TYPE) - F/BLIND HOLDOWN - MILKY WHITE

COPYRIGHT © 2009 WINNEBAGO INDUSTRIES INC.

CURTAIN & CUSHION GROUP (CONTINUED)

HARDWARE (CONTINUED)

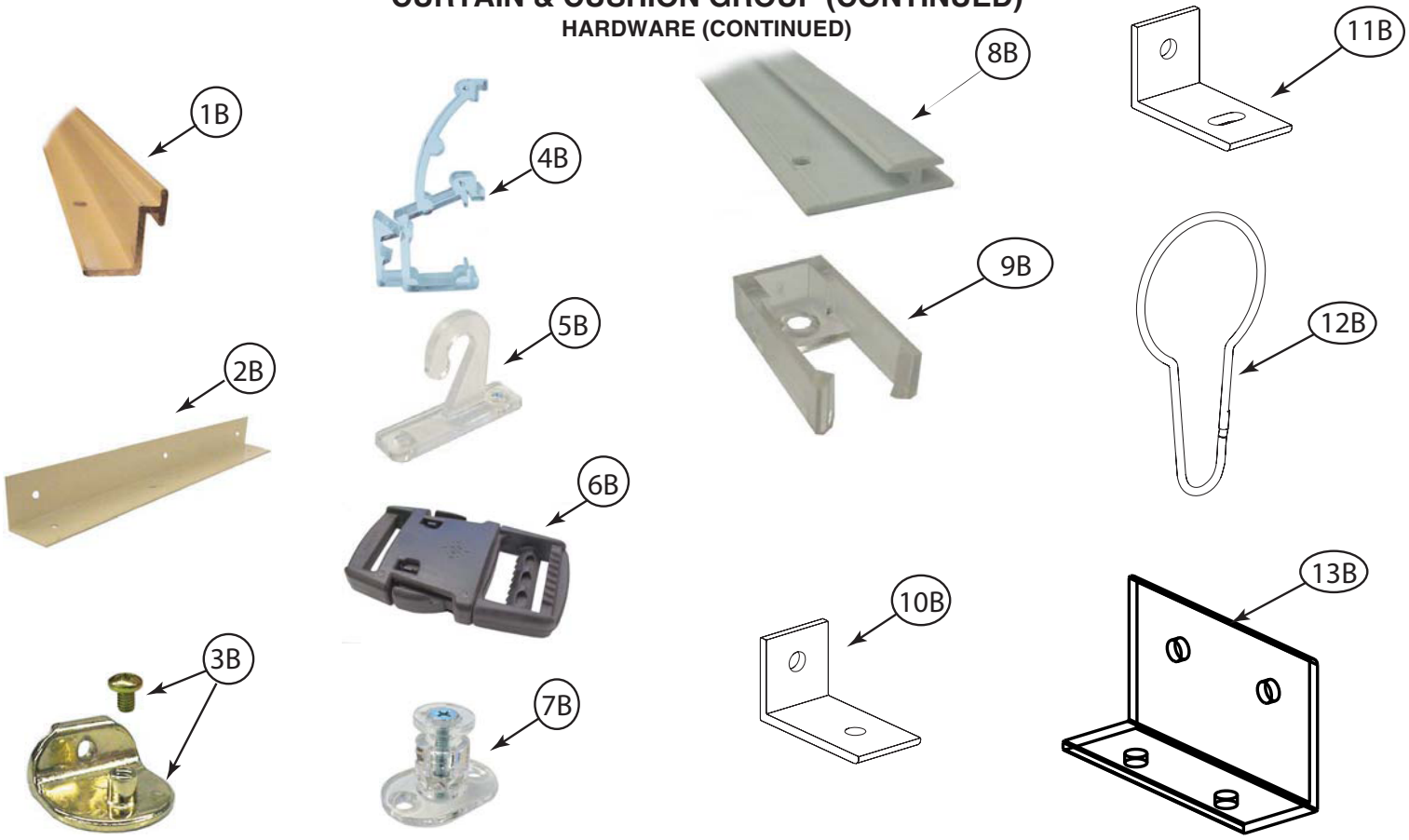

KEY	PART NUMBER	U/M	DESCRIPTION
1B	105450-14-01A	EA	TRACK - CURTAIN - 90" - OFF WHITE
2B	105648-01-02A	EA	BRACE - VALANCE - 14" - OFF WHITE
2B	105648-02-02A	EA	BRACE - VALANCE - 8.5" - OFF WHITE
3B	106544-01-000	EA	PULL - SHADE/BRASS
3B	106544-01-001	EA	SCREW - SHADE/BRASS
3B	106544-02-000	EA	PULL-SHADE - NICKEL
4B	109353-04-000	EA	CLIP - VALANCE SLAT MOUNTING - CLEAR PLASTIC
5B	109441-01-000	EA	BRACKET/HOOK - BLIND HOLD DOWN - LARGE - CLEAR
	109441-02-000	EA	SPACER/BRACKET - BLIND HOLD DOWN
6B	129491-01-000	EA	CATCH - SNAP HOOK - 1"
7B	141634-01-000	EA	BRACKET-(BOBBIN TYPE) 7/8"H HOLDUPBASE(OVAL)-2 HOLE-CLEAR
8B	156172-02-01A	EA	TRACK/WALL - 32" - BONE
8B	156172-03-01A	EA	TRACK/WALL - 21" - BONE
9B	156172-04-01A	EA	END CAP - WALL TRACK - CLEAR
10B	154316-01-01A	EA	BRACE/ANGLE - W/HOLE - CASHMERE
11B	154316-02-01A	EA	BRACE/ANGLE - W/SLOT - CASHMERE
12B	159702-01-01A	EA	HOOK/RING - CURTAIN/SHOWER - NICKEL
13B	156732-01-02A	EA	BRACE - ANGLE - 2.5" - OFF WHITE

CURTAIN & CUSHION GROUP (CONTINUED)

FABRICS

Y01

087272-03-000	DRAPERY LINING-54" IVORY, ROCKLAND MILLS
113979-09-02A	CARPET-HEADLINER (SY)
113979-10-02A	CARPET-HEADLINER, SLIDEOUT (SY), 21.5 WIDE
113979-11-02A	CARPET-HEADLINER, SLIDEOUT (SY), 30.0" WIDE
161246-01-000	FABRIC-DRAPERY, MAIN
148797-DT-000	FABRIC-UPHOLSTERY MAIN ONE, MAIN
148797-DU-000	FABRIC-UPHOLSTERY, PLAIN ACCENT
156773-96-000	FABRIC-UPHOLSTERY, BEDSPREAD, MAIN
154476-10-000	FABRIC-BOXING (ULTRA)
142523-31-000	UPHOLSTERY, ULTRALEATHER, MAIN
156773-97-000	FABRIC-UPHOLSTERY, BEDSPREAD, PATTERN ACCENT A
148797-DU-000	FABRIC-OVERHEAD CABINET, DINETTE/LOUNGE
148797-DU-000	FABRIC-OVERHEAD CABINET, BEDROOM
148797-DU-000	FABRIC-DINETTE WRAP, DINETTES
148797-DT-000	FABRIC-INSERT SLIDEOUT TRIM FRONT, SLIDEOUT TRIM
148797-DT-000	FABRIC-INSERT SLIDEOUT TRIM REAR, SLIDEOUT TRIM
148797-DU-000	FABRIC-DRAWER, FACE WRAP
148797-DU-000	FABRIC-SOFA BASE WRAP “A”
142523-05-000	VINYL-BUCKET SEATS
103907-01-01A	VINYL-FILM DRAPERY
142523-08-000	VINYL-HEADLINERS/BUNKS
142523-08-000	VINYL-ACCENT TRIMS, CAB AREA

Y02

087272-03-000	DRAPERY LINING-54" IVORY, ROCKLAND MILLS
113979-09-02A	CARPET-HEADLINER (SY)
113979-10-02A	CARPET-HEADLINER, SLIDEOUT (SY), 21.5 WIDE
113979-11-02A	CARPET-HEADLINER, SLIDEOUT (SY), 30.0" WIDE
161246-01-000	FABRIC-DRAPERY, MAIN
148797-DV-000	FABRIC-UPHOLSTERY MAIN ONE, MAIN
148797-DW-000	FABRIC-UPHOLSTRY, PLAIN ACCENT
156773-98-000	FABRIC-UPHOLSTERY, BEDSPREAD, MAIN
142523-17-000	FABRIC-BOXING (ULTRA)
142523-17-000	UPHOLSTERY, ULTRALEATHER, MAIN
156773-99-000	FABRIC-UPHOLSTERY, BEDSPREAD, PATTERN ACCENT A
148797-DW-000	FABRIC-OVERHEAD CABINET, DINETTE/LOUNGE
148797-DW-000	FABRIC-OVERHEAD CABINET, BEDROOM
148797-DW-000	FABRIC-DINETTE WRAP, DINETTES
148797-DW-000	FABRIC-INSERT SLIDEOUT TRIM FRONT, SLIDEOUT TRIM
148797-DW-000	FABRIC-INSERT SLIDEOUT TRIM REAR, SLIDEOUT TRIM
148797-DW-000	FABRIC-DRAWER, FACE WRAP
148797-DW-000	FABRIC-SOFA BASE WRAP “A”
142523-05-000	VINYL-BUCKET SEATS
103907-01-01A	VINYL-FILM DRAPERY
142523-08-000	VINYL-HEADLINERS/BUNKS
142523-08-000	VINYL-ACCENT TRIMS, CAB AREA

COPYRIGHT © 2009 WINNEBAGO INDUSTRIES INC.

CURTAIN & CUSHION GROUP (CONTINUED)

FABRICS (CONTINUED)

Y03

087272-03-000	DRAPERY LINING-54" IVORY, ROCKLAND MILLS
113979-09-02A	CARPET-HEADLINER (SY)
113979-10-02A	CARPET-HEADLINER, SLIDEOUT (SY), 21.5 WIDE
113979-11-02A	CARPET-HEADLINER, SLIDEOUT (SY), 30.0" WIDE
156773-J4-000	FABRIC-DRAPERY, MAIN
148797-DX-000	FABRIC-UPHOLSTERY MAIN ONE, MAIN
148797-DX-000	FABRIC-UPHOLSTRY, PLAIN ACCENT
148797-DY-000	FABRIC-UPHOLSTRY ACCENT, PATTERN
156773-J3-000	FABRIC-UPHOLSTERY, BEDSPREAD, MAIN
154476-10-000	FABRIC-BOXING (ULTRA)
142523-31-000	UPHOLSTERY, ULTRALEATHER, MAIN
156773-J4-000	FABRIC-UPHOLSTERY, BEDSPREAD, PATTERN ACCENT A
148797-DX-000	FABRIC-OVERHEAD CABINET, DINETTE/LOUNGE
148797-DX-000	FABRIC-OVERHEAD CABINET, BEDROOM
148797-DX-000	FABRIC-DINETTE WRAP, DINETTES
148797-DX-000	FABRIC-INSERT SLIDEOUT TRIM FRONT, SLIDEOUT TRIM
148797-DX-000	FABRIC-INSERT SLIDEOUT TRIM REAR, SLIDEOUT TRIM
148797-DX-000	FABRIC-DRAWER, FACE WRAP
148797-DX-000	FABRIC-SOFA BASE WRAP “A”
142523-05-000	VINYL-BUCKET SEATS
103907-01-01A	VINYL-FILM DRAPERY
142523-08-000	VINYL-HEADLINERS/BUNKS
142523-08-000	VINYL-ACCENT TRIMS, CAB AREA

COPYRIGHT © 2009 WINNEBAGO INDUSTRIES INC.

DRIVERS COMPARTMENT GROUP

FRONT INTERIOR

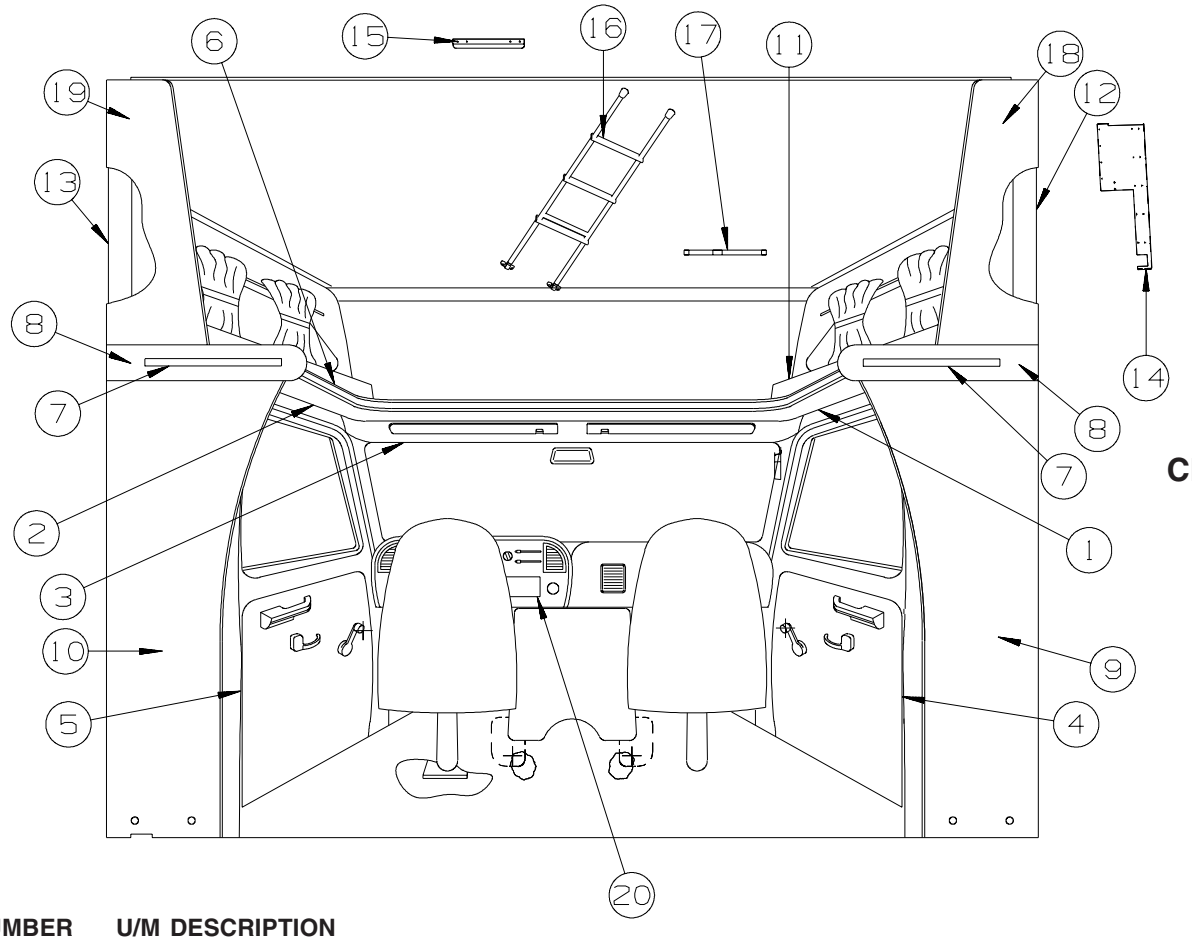

FORD CHASSIS

KEY	PART NUMBER	U/M	DESCRIPTION
1	106447-07-U01	EA	TRIM - CAB DOOR - UPPER/RIGHT HAND
2	106447-08-U01	EA	TRIM - CAB DOOR - UPPER/LEFT HAND
3	106448-07-T11	EA	HEADLINER - W/VINYL
4	125031-01-T11	EA	TRIM - CAB - B-PILLAR - PASSENGER SIDE
5	125031-02-T11	EA	TRIM - CAB - B-PILLAR - DRIVER SIDE
6	119520-01-01A	FT	MOLDING-T - OFFSET W/EDGE LIP - 1.3" FACE - OFF WHITE
7	M09525-61-W08	EA	MOLDING - TRIM/VEE - 1.5" X 21" - SIERRA MAPLE
8	P41793-01-Y01	EA	CAP - SLEEPERBOARD (Y01, Y02) - 1L9
8	P41793-01-Y03	EA	CAP - SLEEPERBOARD (Y03) - 1L9
9	P41803-01-Y01	EA	WINGWALL - INNER/LOWER - PASSENGER - W/T MOLDING (Y01, Y02)
9	P41803-01-Y03	EA	WINGWALL - INNER/LOWER - PASSENGER - W/T MOLDING (Y03)
10	P41803-02-Y01	EA	WINGWALL - INNER/LOWER - DRIVER - W/T MOLDING (Y01, Y02)
10	P41803-02-Y03	EA	WINGWALL - INNER/LOWER - DRIVER - W/T MOLDING (Y03)
11	163222-01-W08	EA	CABINET - HAMPER/STORAGE - W/O HDW
11	163222-04-W02	EA	CABINET - HAMPER/STORAGE - W/O HDW - 1MJ
12	109709-01-01A	EA	BRACKET - WINGWALL - OFF WHITE
13	109709-11-03B	EA	BRACKET - WINGWALL - OFF WHITE
14	109709-12-03B	EA	BRACKET - WINGWALL - OFF WHITE - 1MJ
15	094658-04-TK0	EA	HANDLE - BUNK - 1.1" X 2" X 14.9" - SIERRA MAPLE
16	106025-05-01A	EA	LADDER - BUNK - 50.1" - BLACK
17	162356-02-000	EA	STRAP/TIEDOWN - LADDER
18	P58629-25-Y01	EA	PANEL - END CAP (Y01, Y02)
18	P58629-25-Y03	EA	PANEL - END CAP (Y03)
18	P58629-19-Y01	EA	PANEL - END CAP (Y01, Y02) - 1MJ
18	P58629-19-Y03	EA	PANEL - END CAP (Y03) - 1MJ
19	P58629-20-Y01	EA	PANEL - END CAP (Y01, Y02)
19	P58629-20-Y03	EA	PANEL - END CAP (Y03)
20	150974-06-04A	EA	APPLIQUE - BEZEL - INSTRUMENT PANEL - LEATHER LASER WAVE

COPYRIGHT © 2009 WINNEBAGO INDUSTRIES INC.

DRIVERS COMPARTMENT GROUP (CONTINUED)

FRONT INTERIOR (CONTINUED)

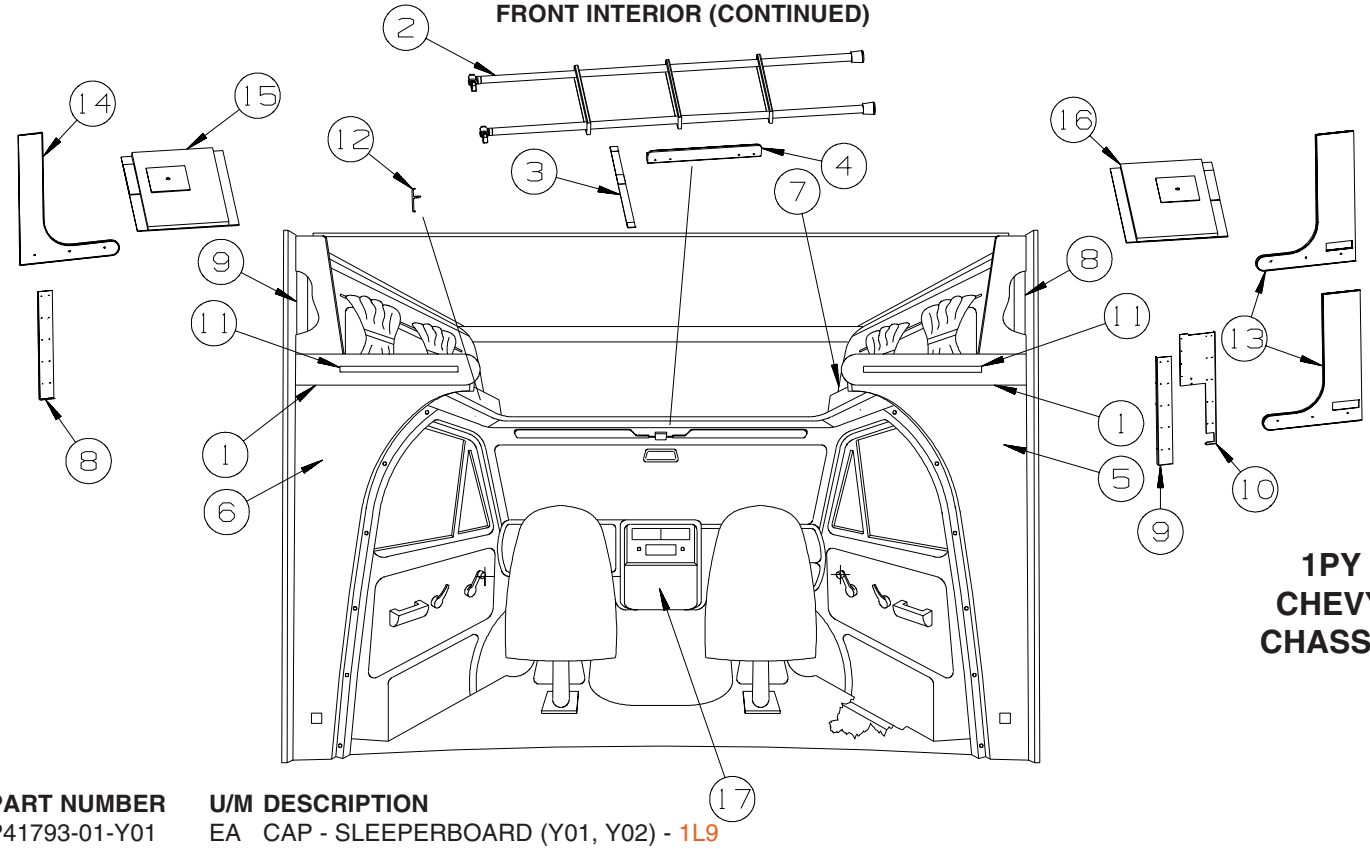

1PY CHEVY CHASSIS

KEY	PART NUMBER	U/M	DESCRIPTION
1	P41793-01-Y01	EA	CAP - SLEEPERBOARD (Y01, Y02) - 1L9
1	P41793-01-Y03	EA	CAP - SLEEPERBOARD (Y03) - 1L9
2	106025-05-01A	EA	LADDER - BUNK - 50.1" - BLACK
3	162356-02-000	EA	STRAP/TIEDOWN - LADDER
4	094658-04-TK0	EA	HANDLE - BUNK - 1.1" X 2" X 14.9" - SIERRA MAPLE
5	P41803-01-Y01	EA	WINGWALL - INNER/LOWER - PASSENGER - W/T MOLDING (Y01, Y02)
5	P41803-01-Y03	EA	WINGWALL - INNER/LOWER - PASSENGER - W/T MOLDING (Y03)
6	P41803-02-Y01	EA	WINGWALL - INNER/LOWER - DRIVER - W/T MOLDING (Y01, Y02)
6	P41803-02-Y03	EA	WINGWALL - INNER/LOWER - DRIVER - W/T MOLDING (Y03)
7	163222-01-W08	EA	CABINET - HAMPER/STORAGE - W/O HDW
7	163222-04-W02	EA	CABINET - HAMPER/STORAGE - W/O HDW - 1MJ
8	109709-11-03B	EA	BRACKET - WINGWALL - OFF WHITE
9	109709-01-01A	EA	BRACKET - WINGWALL - OFF WHITE
10	109709-12-03B	EA	BRACKET - WINGWALL - OFF WHITE - 1MJ
11	M09525-61-W08	EA	MOLDING - TRIM/VEE - 1.5" X 21" - SIERRA MAPLE
12	119520-01-01A	FT	MOLDING-T - OFFSET W/EDGE LIP - 1.3" FACE - OFF WHITE
13	P58629-25-Y01	EA	PANEL - END CAP (Y01, Y02)
13	P58629-25-Y03	EA	PANEL - END CAP (Y03)
13	P58629-19-Y01	EA	PANEL - END CAP (Y01, Y02) - 1MJ
13	P58629-19-Y03	EA	PANEL - END CAP (Y03) - 1MJ
14	P58629-20-Y01	EA	PANEL - END CAP (Y01, Y02)
14	P58629-20-Y03	EA	PANEL - END CAP (Y03)
15	156218-04-U01	EA	HEADLINER - W/VINYL
16	156218-05-U01	EA	HEADLINER - W/VINYL
17	150974-03-04A	EA	APPLIQUE - BEZEL - INSTRUMENT PANEL - LEATHER LASER WAVE

COPYRIGHT © 2009 WINNEBAGO INDUSTRIES INC.

DRIVERS COMPARTMENT GROUP (CONTINUED)

FRONT INTERIOR (CONTINUED)

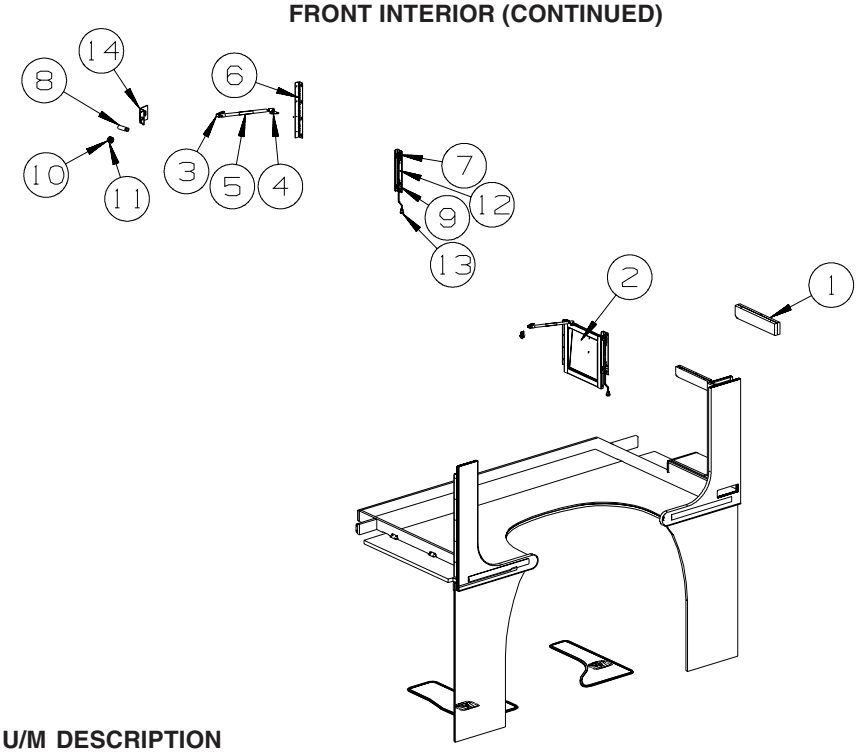

1MJ
TV-19"DC, DVD PLAYER, VIDEO SELECTION

KEY	PART NUMBER	U/M	DESCRIPTION
1	161007-02-W08	EA	SUPPORT/TV - CABINET
2	167229-01-02B	EA	SUPPORT - TV - E-COATED
			FROM: 00-00-00 THRU: 01-12-09
2	167229-02-02B	EA	SUPPORT - TV - E-COATED
			FROM: 01-13-09 THRU: 99-99-99
2	167233-05-02B	EA	BRACKET/MOUNTING - TV - E-COATED
			FROM: 01-13-09 THRU: 99-99-99
3	126263-03-02B	EA	BRACKET - GAS SPRING W/BALL STUD - E/COATED
4	126263-08-02B	EA	BRACKET - GAS SPRING W/CENTERED BALL STUD - E-COATED
5	142569-31-000	EA	SPRING/GAS - 30 LB - 11.8" EXTENDED/7.3" COMPRESSED
6	158921-02-01A	EA	HINGE - PIANO - TRUNK DOOR - 2" X 12.6" - MILL FINISH
7	150082-02-000	EA	LATCH/TV - W/O KEEPER/BRACKET/ROD
8	150082-03-000	EA	KEEPER - W/O TV LATCH
9	150082-04-000	EA	BRACKET - F/TV LATCH-KEEPER
10	150082-06-000	EA	NUT - F/TV LATCH-KEEPER
11	150082-07-000	EA	WASHER - F/TV LATCH-KEEPER
12	150082-08-000	EA	ROD - F/TV LATCH-KEEPER
13	150109-01-01A	EA	KNOB - F/TV SWINGOUT - BLACK
14	150214-02-02B	EA	BRACKET/KEEPER - TV/SWINGOUT - E-COATED

COPYRIGHT © 2009 WINNEBAGO INDUSTRIES INC.

DRIVERS COMPARTMENT GROUP (CONTINUED)

CABINETS

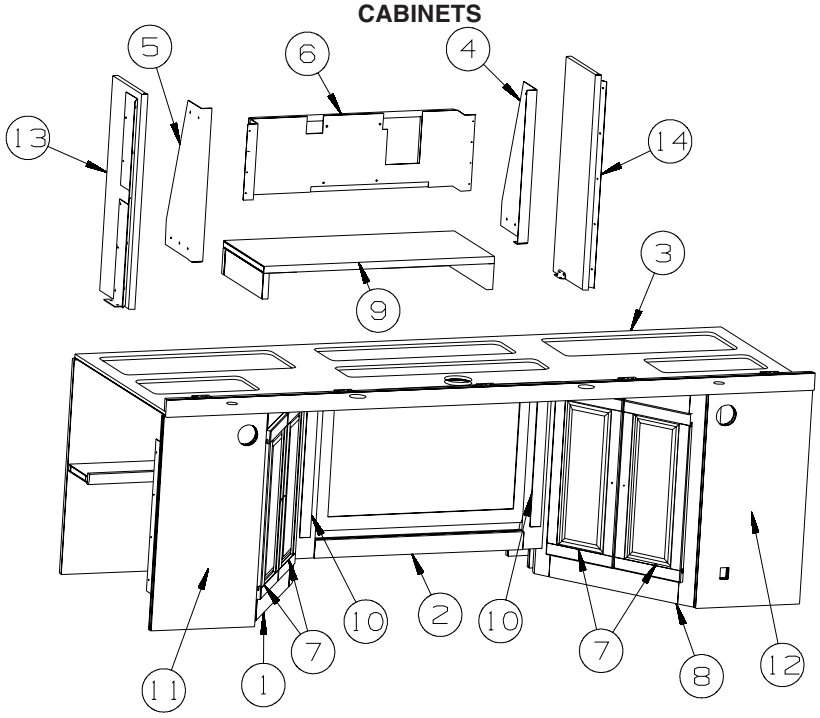

1L9 ENTERTAINMENT CENTER CABOVER

KEY	PART NUMBER	U/M	DESCRIPTION
1	168241-03-Y01	EA	CABINET - ENTERTAINMENT CENTER/LEFT - W/O HDW
1	168241-01-Y01	EA	CABINET - ENTERTAINMENT CENTER/LEFT - W/O HDW - 1JM
2	168242-01-Y01	EA	FACE/FRAME - TV CABINET (PICTURE FRAME)
3	169500-01-Y01	EA	PANEL - ENTERTAINMENT CENTER
4	166214-03-02B	EA	BRACE/BRACKET - TV - E-COATED
5	166214-04-02B	EA	BRACE/BRACKET - TV - E-COATED
6	169235-01-02B	EA	BRACKET - TV/32" - E-COATED
7	164492-43-Y05	EA	DOOR - RAISED/PENCIL EDGE - 10.8" X 23.8" - W/O HDW
	076767-04-000	EA	CABLE - STAINLESS STEEL - 5.9"
8	168241-04-Y01	EA	CABINET - ENTERTAINMENT CENTER/RIGHT - W/O HDW
8	168241-02-Y01	EA	CABINET - ENTERTAINMENT CENTER/RIGHT - W/O HDW - 1JM
9	157616-02-Y01	EA	CABINET - SHELF/TV - W/O HDW
10	M09568-83-Y01	EA	MOLDING - TRIM/VEE - 1.5" X 19.7" - SIERRA MAPLE
11		EA	PANEL - END CAP
12		EA	PANEL - END CAP
13	P68241-13-Y01	EA	END CAP - OVERHEAD/CABINET
14	P68241-23-Y01	EA	END CAP - OVERHEAD/CABINET

COPYRIGHT © 2009 WINNEBAGO INDUSTRIES INC.

ELECTRICAL GROUP

110V BODY WIRING

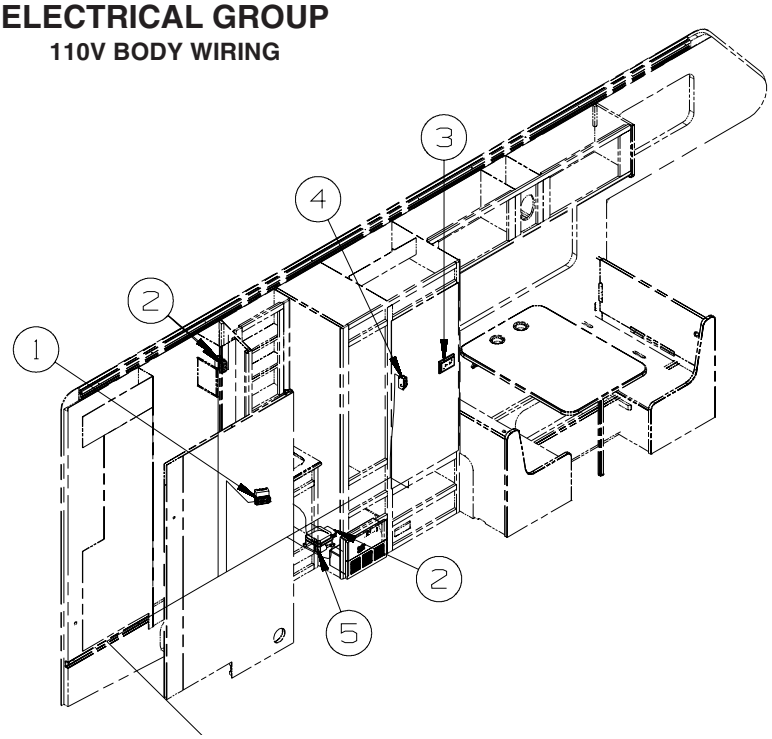

KEY	PART NUMBER	U/M	DESCRIPTION
1	163319-01-02A	EA	RECEPTACLE - GFCI - 15A 125V - BROWN
2	058707-02-000	EA	RECEPTACLE - BLANK - JUNCTION BOX
3	172839-01-01A	EA	RECEPTACLE - ELECTRICAL - DOUBLE - BROWN
3	133713-01-22A	EA	SPACER/RECEPTACLE - VINYL - SIERRA MAPLE
4	058707-01-000	EA	RECEPTACLE - ELECTRIC - SINGLE - BROWN
5	136481-01-000	EA	MODULE - AUTO ENERGY SELECTOR - 53B

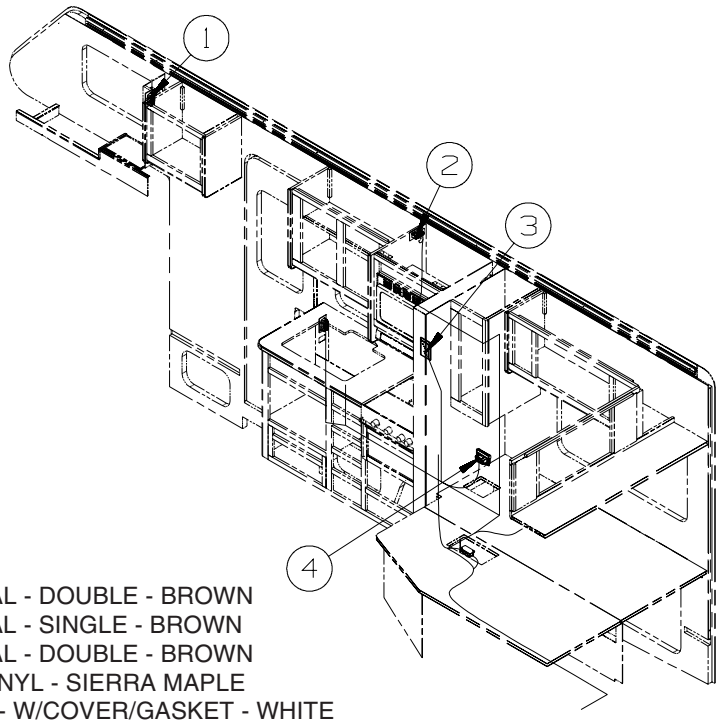

KEY	PART NUMBER	U/M	DESCRIPTION
1	172839-01-01A	EA	RECEPTACLE - ELECTRICAL - DOUBLE - BROWN
2	172839-02-01A	EA	RECEPTACLE - ELECTRICAL - SINGLE - BROWN
3	172839-01-01A	EA	RECEPTACLE - ELECTRICAL - DOUBLE - BROWN
3	133713-01-22A	EA	SPACER/RECEPTACLE - VINYL - SIERRA MAPLE
4	131826-01-01A	EA	RECEPTACLE - EXTERIOR - W/COVER/GASKET - WHITE

COPYRIGHT © 2009 WINNEBAGO INDUSTRIES INC.

ELECTRICAL GROUP (CONTINUED)

12V BODY WIRING

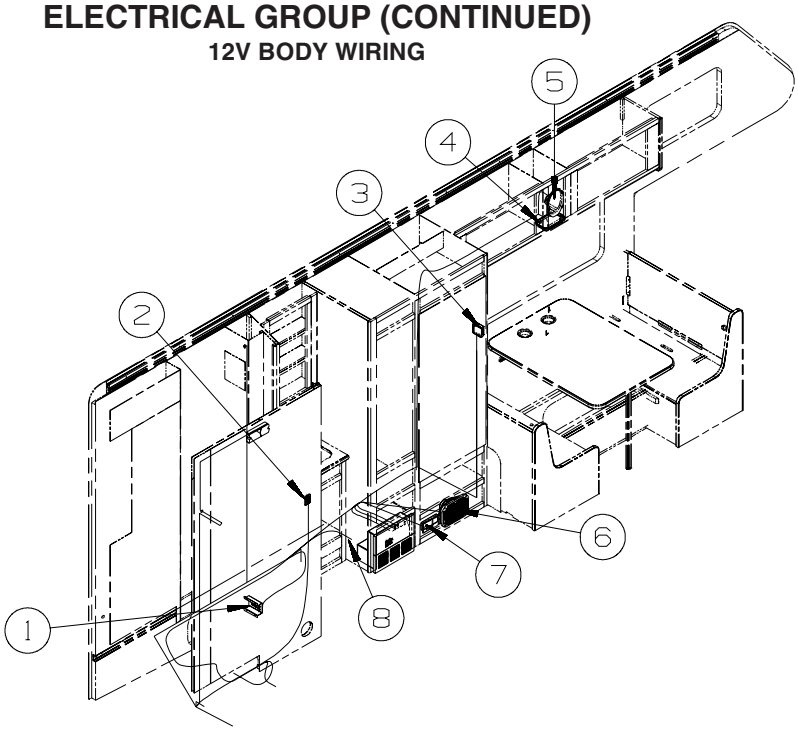

KEY	PART NUMBER	U/M	DESCRIPTION
1	139335-01-02B	EA	PLATE - ELECTRICAL - E-COATED - NOT ILLUSTRATED
			FROM: 00-00-00 THRU: 07-29-08
1	082134-01-000	EA	ADAPTER - TV - CABLE TO CABLE - NOT ILLUSTRATED
			FROM: 00-00-00 THRU: 07-29-08
1	082136-01-000	EA	NUT - HEX JAM - 3/8-32 - NOT ILLUSTRATED
			FROM: 00-00-00 THRU: 07-29-08
1	087236-01-000	EA	LABEL - CABLE - INPUT - NOT ILLUSTRATED
			FROM: 00-00-00 THRU: 07-29-08
1	149557-07-01A	EA	PLATE/WALL - SINGLE COAXIAL/HORIZONTAL - WHITE
			FROM: 07-30-08 THRU: 99-99-99
2	135740-01-01A	EA	SWITCH - ROCKER - SPST - ON/OFF - BROWN
2	135741-01-01A	EA	SWITCH - BASE - SINGLE - BROWN
2	135742-07-02A	EA	BEZEL - SWITCH - CEILING - BROWN
3	115764-01-01A	EA	THERMOSTAT - FURNACE - WHITE
3	115764-01-03A	EA	THERMOSTAT - FURNACE - BLACK
4*	137417-05-01A	EA	LIGHT - DOME - DOUBLE - W/SWITCH/OPTIC LENS - WHITE
4*	093575-47-01A	EA	LIGHT - CEILING/DOUBLE - BRUSHED NICKEL - 086
5	110465-01-000	EA	SPEAKER KIT,4 5X7 SPEAKERS
6	124884-01-000	EA	SPEAKER - 6" X 9" - SUB-WOOFER - W/O GRILLE - 1JM
6	151844-01-01A	EA	GRILLE - SPEAKER - 6" X 9" - SUB WOOFER - BLACK - 1JM
7	150138-03-02A	EA	DETECTOR - LP GAS - BROWN
8	063912-02-000	EA	RELAY - CANISTER - SPDT

***COMPONENT PARTS LISTED LATER IN THIS GROUP**

COPYRIGHT © 2009 WINNEBAGO INDUSTRIES INC.

ELECTRICAL GROUP (CONTINUED)

12V BODY WIRING (CONTINUED)

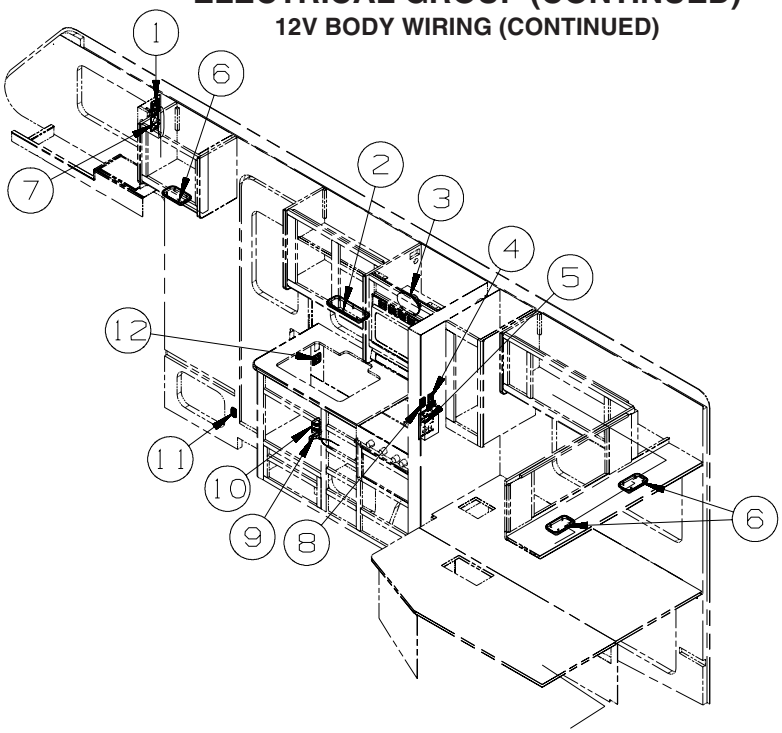

KEY	PART NUMBER	U/M	DESCRIPTION
1	149557-05-01A	EA	PLATE/WALL - DUAL COAXIAL/HORIZONTAL - WHITE
1	149557-05-02A	EA	PLATE/WALL - DUAL COAXIAL/HORIZONTAL - BROWN
2*	137417-05-01A	EA	LIGHT - DOME - DOUBLE - W/SWITCH/OPTIC LENS - WHITE
3	110465-01-000	EA	SPEAKER KIT,4 5X7 SPEAKERS
4	135740-06-01A	EA	SWITCH - ROCKER - ON/OFF - LIGHTED - RED
4	135741-01-01A	EA	SWITCH - BASE - SINGLE - BROWN
4	135742-01-01A	EA	BEZEL - SWITCH - SINGLE - BROWN
4	134563-01-02A	EA	LABEL - SWITCH - HEATER - BLACK/WHITE
5*	134940-07-01A	EA	PANEL - MONITOR - 2 TANK
5*	134940-06-01A	EA	PANEL - MONITOR - 2 TANK - W/GENERATOR SWITCH - 40N
6*	137417-02-01A	EA	LIGHT - DOME - SINGLE - W/SWITCH/OPTIC LENS - WHITE
7	086777-02-000	EA	WALLPLATE/TV CABLE W/ANTENNA SWITCH/BOOSTER - 2 TV - BLACK
8	135740-06-01A	EA	SWITCH - ROCKER - ON/OFF - LIGHTED - RED - 53B
8	135741-01-01A	EA	SWITCH - BASE - SINGLE - BROWN - 53B
8	135742-35-02A	EA	BEZEL - SWITCH - WATER HEATER/110 VOLT - BROWN - 53B
9	061424-01-000	EA	LIGHT - AISLE - 12 VOLT - RECTANGULAR
10	098351-22-02A	EA	PLATE/SWITCH - 2 GANG - CHROME
10	108357-17-000	EA	SWITCH - ROCKER - DPDT - MOM/OFF/MOM - W/LIGHT - W/O COVER
10	108356-19-01A	EA	COVER/ACTUATOR SWITCH - 3 GROOVES-COACH BATT DISC - BLK
10	108355-01-000	EA	HOUSING - SWITCH
10	096241-03-000	EA	SWITCH - BLANK - BLACK
10	108357-19-000	EA	SWITCH - ROCKER - SPST - ON/OFF - W/COVER/LABEL - STEP - 1E2
10	108355-01-000	EA	HOUSING - SWITCH - 1E2
11	116995-02-000	EA	SWITCH/MAGNET - ELECTRIC STEP - BLACK/WHITE- NORMALLY OPEN
12	135740-01-01A	EA	SWITCH - ROCKER - SPST - ON/OFF - BROWN
12	135741-02-01A	EA	SWITCH - BASE - DOUBLE - BROWN
12	135742-19-02A	EA	BEZEL - SWITCH - CEILING/PORCH - BROWN

***COMPONENT PARTS LISTED LATER IN THIS GROUP**

COPYRIGHT © 2009 WINNEBAGO INDUSTRIES INC.

ELECTRICAL GROUP (CONTINUED)

12V BODY WIRING (CONTINUED)

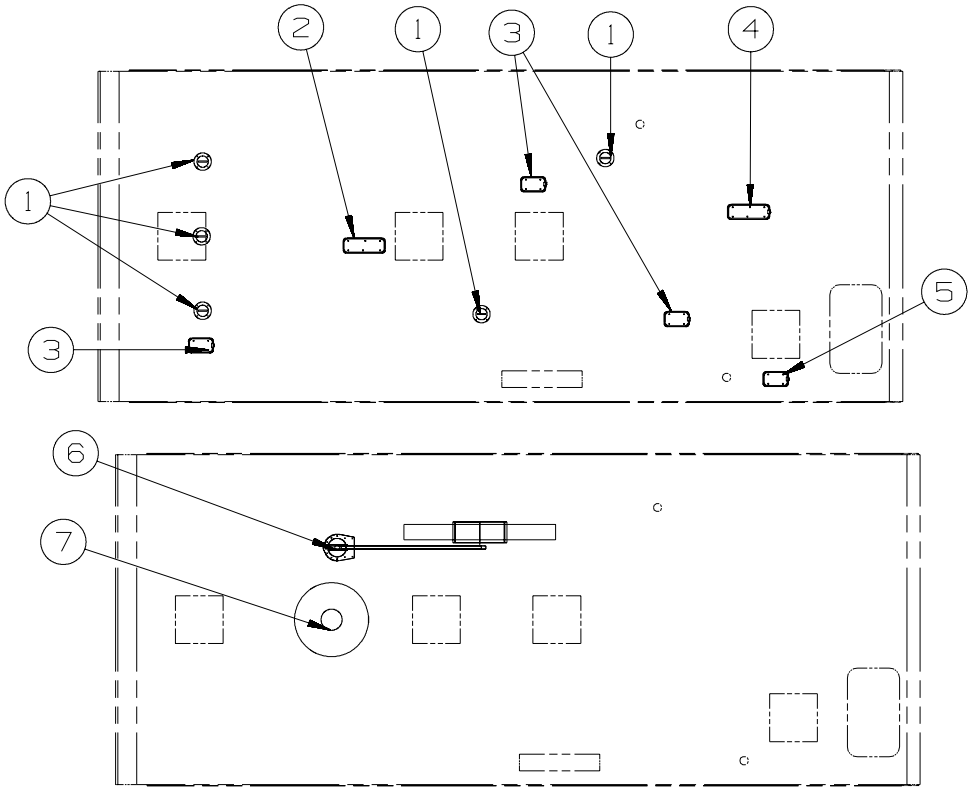

KEY	PART NUMBER	U/M	DESCRIPTION
1	160867-01-01A	EA	SPEAKER - ROUND/CEILING - CREAM - MAGNADYNE - LS3EYC-WN - 1JM
2*	137417-06-01A	EA	LIGHT - DOME - DOUBLE - W/O SWITCH - W/FROSTED LENS-WHITE
3*	137417-01-01A	EA	LIGHT - DOME - SINGLE - W/SWITCH/FROSTED LENS - WHITE
4*	137417-04-01A	EA	LIGHT - DOME - DOUBLE - W/SWITCH/FROSTED LENS - WHITE
5*	137417-03-01A	EA	LIGHT - DOME - SINGLE - W/O SWITCH - W/FROSTED LENS-WHITE
6*	076319-23-000	EA	ANTENNA - TV ROOF MOUNT - 44.5" MAST - 193
6*	076319-25-000	EA	KIT - HARDWARE INTERIOR - 193
6	069726-02-000	EA	BUMPER - .88" OD X .40" THICK - BLACK - 193
7	167632-01-01A	EA	ANTENNA - TV ROOF MOUNT/ROUND-W/O POWER SUPPLY - WHT - 1J8
7	146488-01-000	EA	PLATE - ROOF - CABLE ENTRY - 1J8

***COMPONENT PARTS LISTED LATER IN THIS GROUP**

COPYRIGHT © 2009 WINNEBAGO INDUSTRIES INC.

ELECTRICAL GROUP (CONTINUED)

EXTERIOR LAMPS

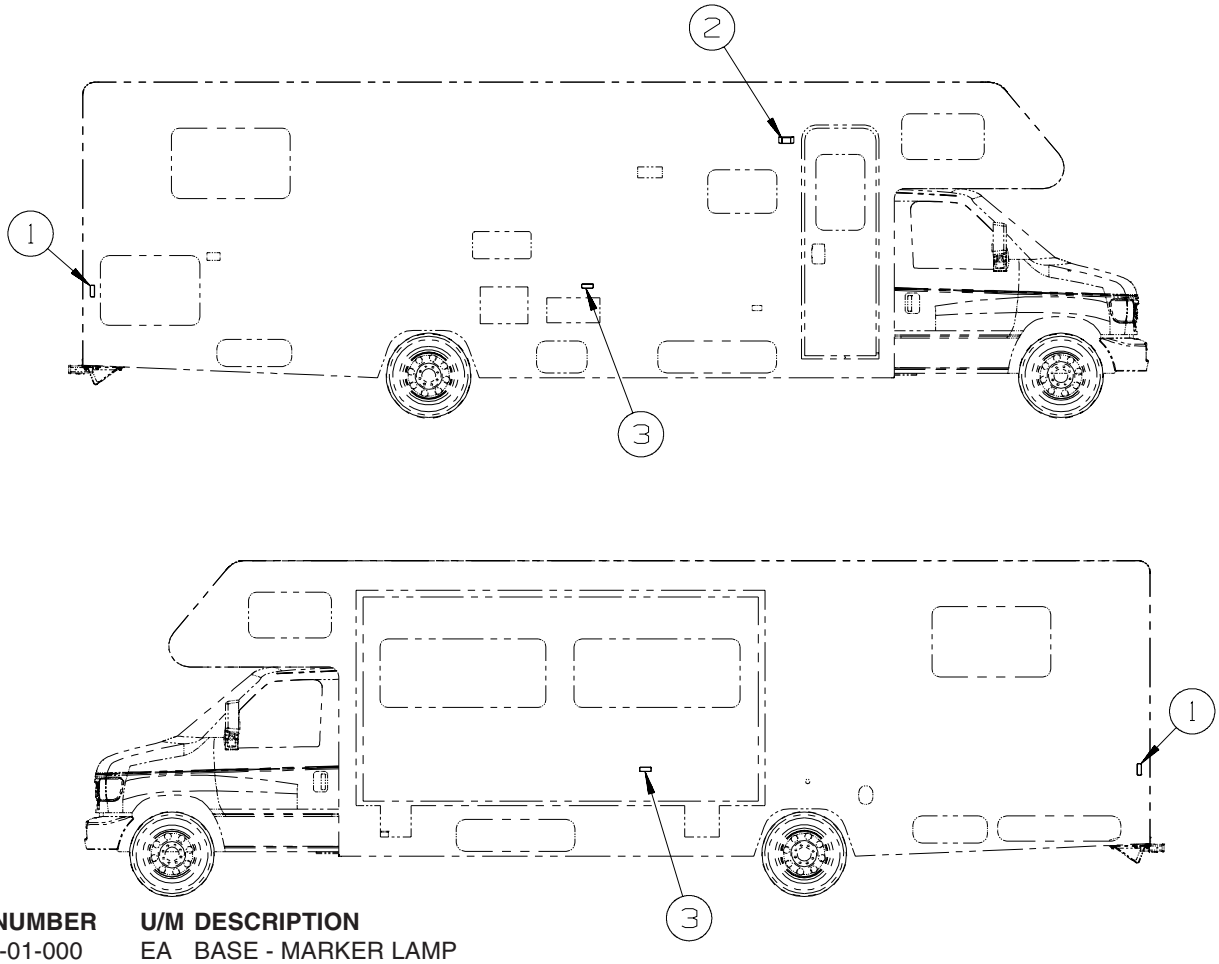

KEY	PART NUMBER	U/M	DESCRIPTION
1	111102-01-000	EA	BASE - MARKER LAMP
1	111102-03-000	EA	LENS - RED - MARKER LAMP
2	097917-01-09A	EA	LIGHT - PORCH - ENTRY DOOR - WHITE
3	NOT USED		

COPYRIGHT © 2009 WINNEBAGO INDUSTRIES INC.

ELECTRICAL GROUP (CONTINUED)

EXTERIOR LAMPS (CONTINUED)

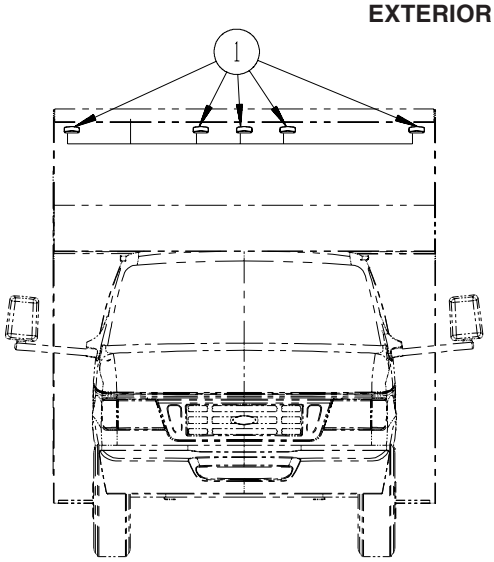

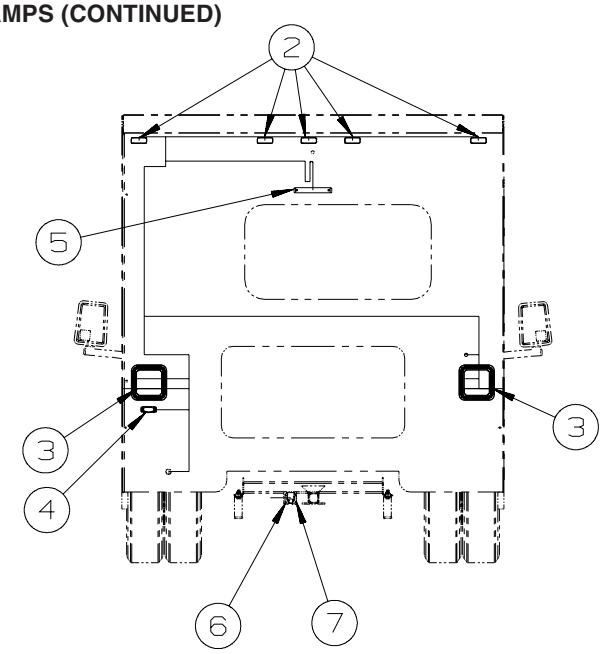

KEY	PART NUMBER	U/M	DESCRIPTION
1	111102-01-000	EA	BASE - MARKER LAMP
1	111102-02-000	EA	LENS - AMBER - MARKER LAMP
2	111102-01-000	EA	BASE - MARKER LAMP
2	111102-03-000	EA	LENS - RED - MARKER LAMP
3*	153658-01-01A	EA	LAMP - STOP/TURN/TAIL/BACK UP - BRIGHT WHITE
4	066432-02-000	EA	LIGHT - LICENSE - BLACK
4	066432-03-000	EA	BRACKET - LICENSE PLATE
5	136916-01-000	EA	LIGHT - BRAKE - CENTER MOUNT - RECTANGLE - 1.3” X 9.8”
6	146246-01-000	EA	CONNECTOR/PLUG - TRAILER - 7 PIN
7	157593-01-000	EA	CONNECTOR - PLUG - TRAILER - 7 SOCKET

***COMPONENT PARTS LISTED LATER IN THIS GROUP**

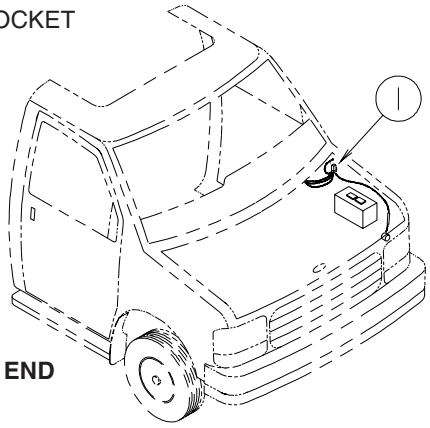

FRONT END

KEY	PART NUMBER	U/M	DESCRIPTION
1	100138-01-000	EA	MODULE - DAYTIME/RUNNING LIGHT - HAMSAR DRL #H8005B - 265 OR 27E

KEY	PART NUMBER	U/M	DESCRIPTION
	167450-07-01A	EA	PANEL - W/ELECTRIC MIRROR SWITCHES - BLACK - 28X
	167450-09-01A	EA	PANEL - W/ELECTRIC MIRROR SWITCHES - BLACK - GM - 28X/1PY
	167450-08-000	EA	HARNESS/WIRE - F/ELECTRIC MIRRORS - 28X

COPYRIGHT © 2009 WINNEBAGO INDUSTRIES INC.

ELECTRICAL GROUP (CONTINUED)

FRONT TV/DVD

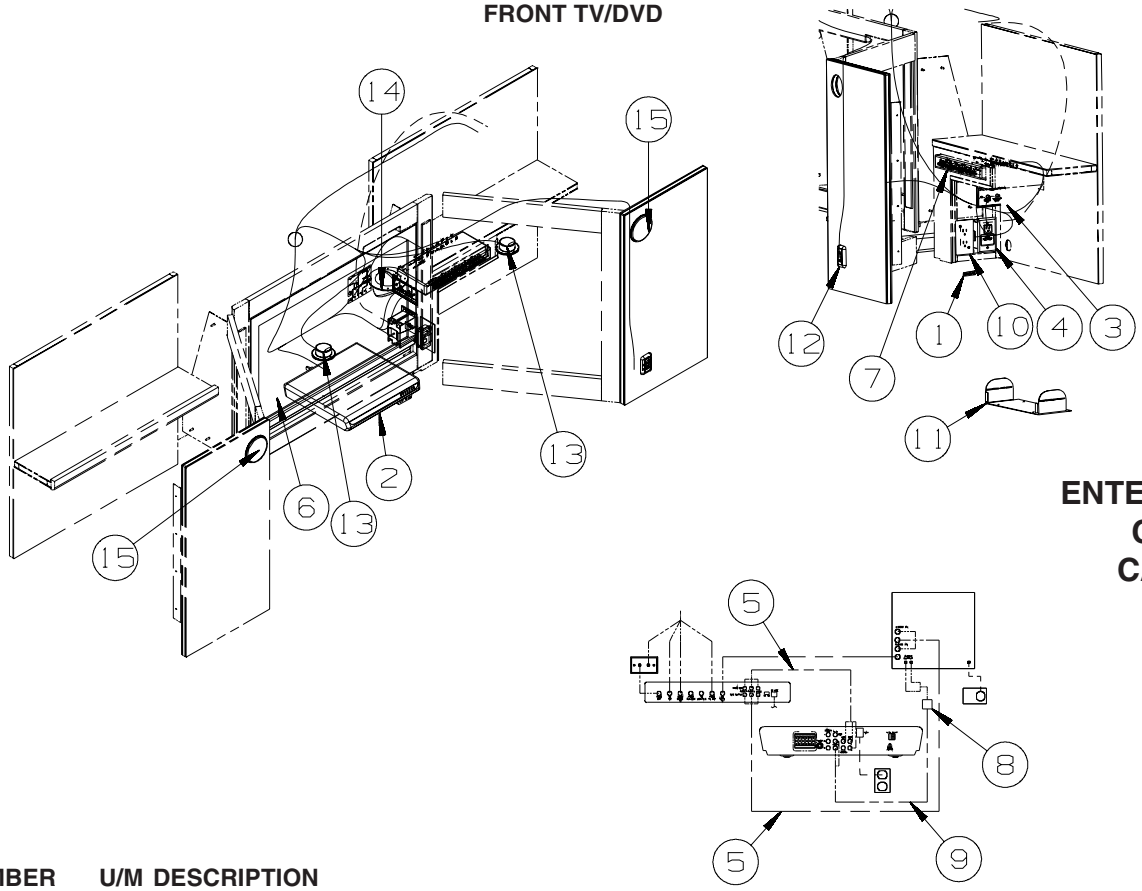

1L9
ENTERTAINMENT CENTER CABOVER

KEY	PART NUMBER	U/M	DESCRIPTION
1	158542-02-01A	EA	LABEL - RECEPTACLE - ELECTRONICS - WHITE/BLACK - 265
2*	164270-01-000	EA	DVD - HOME THEATER - W/O SPEAKERS - MEMOREX STS2891-R - 1JM
3	149557-05-01A	EA	PLATE/WALL - DUAL COAXIAL/HORIZONTAL - WHITE
3	149557-05-02A	EA	PLATE/WALL - DUAL COAXIAL/HORIZONTAL - BROWN
4	156676-01-000	EA	CONTROLLER/OUTLET - POWER/TV - AUTO SHUTOFF W/IGNITION
5	136860-03-000	EA	CABLE - RCA - SHIELDED - 3 MALE TO MALE CONNECTORS - 6' - 1JM
6*	169151-01-000	EA	TV - 32" - FLAT PANEL/LCD/HDTV - SHARP LC32SB24U FROM: 00-00-00 THRU: 10-05-08
6*	169151-02-000	EA	TV - 32" - FLAT PANEL/LCD/HDTV - SHARP LC32D44U FROM: 10-06-08 THRU: 99-99-99
7	168102-01-000	EA	SWITCH - VIDEO/ANTENNA/DVD - POWER SUPPLY
8	123324-01-000	EA	FILTER - GROUND LOOP - ISOLATION TRANSFORMER - 1JM
9	117420-02-000	EA	CABLE - W/MALE RCA ENDS - SHIELDED - 4' - 1JM FROM: 00-00-00 THRU: 08-03-08
9	168245-01-000	EA	CABLE/VIDEO - 6' COMPONENT/COMPOSITE-6 CODED ENDS/BOTH - 1JM FROM: 08-04-08 THRU: 99-99-99
10	172839-01-01A	EA	RECEPTACLE - ELECTRICAL - DOUBLE - BROWN
11	156586-02-02B	EA	BRACKET - SWITCH/VIDEO - E-COATED
12	135740-01-01A	EA	SWITCH - ROCKER - SPST - ON/OFF - BROWN
12	135741-01-01A	EA	SWITCH - BASE - SINGLE - BROWN
12	135742-01-01A	EA	BEZEL - SWITCH - SINGLE - BROWN
13*	165170-01-01A	EA	LIGHT - HALOGEN - ROUND/GLASS LENS - 10 WATT
14	160867-01-01A	EA	SPEAKER - ROUND/CEILING - CREAM - MAGNADYNE - LS3EYC-WN - 1JM
15	160868-01-01A	EA	SPEAKER - ROUND/CEILING - W/O CASE - BLACK - 1JM
15	160868-02-01A	EA	GRILLE/ROUND - SPEAKER - SILVER - 1JM

***COMPONENT PARTS LISTED LATER IN THIS GROUP**

COPYRIGHT © 2009 WINNEBAGO INDUSTRIES INC.

ELECTRICAL GROUP (CONTINUED)

SIDE TV/DVD

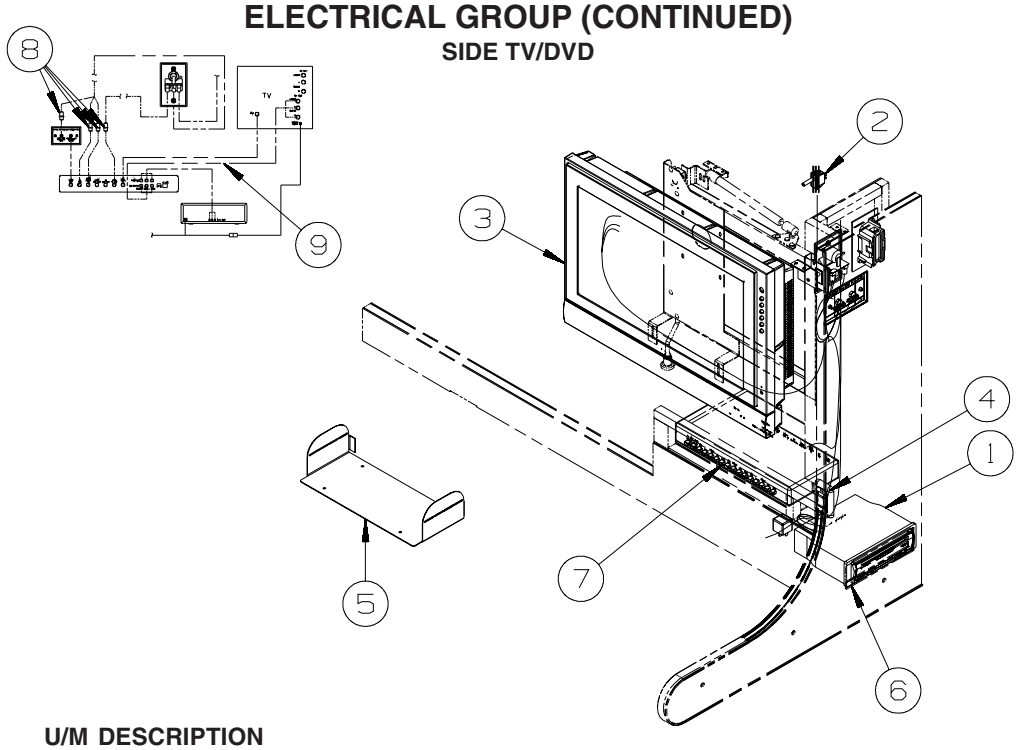

KEY	PART NUMBER	U/M	DESCRIPTION
1*	160603-01-000	EA	DVD PLAYER - HORIZONTAL MNT - 12V - BLK - NESA DVD-1002
2	159814-01-000	EA	SWITCH - PLUNGER - SPST - OFF/ON
3*	164495-01-000	EA	TV - 19" - LCD 16:9 - BOTTOM SPEAKER - JENSEN JE1907DC FROM: 00-00-00 THRU: 01-12-09
3*	170909-01-000	EA	TV - 19" LCD/STEREO - 12V - JENSEN #JE1909 FROM: 01-13-09 THRU: 99-99-99
3	170909-02-000	EA	ADAPTOR/DC POWER - 19" TV - 2 PIN HOUSING FROM: 01-13-09 THRU: 99-99-99
4	135740-01-01A	EA	SWITCH - ROCKER - SPST - ON/OFF - BROWN
4	135741-01-01A	EA	SWITCH - BASE - SINGLE - BROWN
4	135742-45-02A	EA	BEZEL - SWITCH - TV - BROWN
5	156586-02-02B	EA	BRACKET - SWITCH/VIDEO - E-COATED
6	164740-01-02B	EA	TRIM RING - RADIO - E-COATED
7	168102-01-000	EA	SWITCH - VIDEO/ANTENNA/DVD - POWER SUPPLY
8	082134-01-000	EA	ADAPTER - TV - CABLE TO CABLE
9	136860-03-000	EA	CABLE - RCA - SHIELDED - 3 MALE TO MALE CONNECTORS - 6'

***COMPONENT PARTS LISTED LATER IN THIS GROUP**

COPYRIGHT © 2009 WINNEBAGO INDUSTRIES INC.

ELECTRICAL GROUP (CONTINUED)

COMPONENT PARTS FOR WIRING

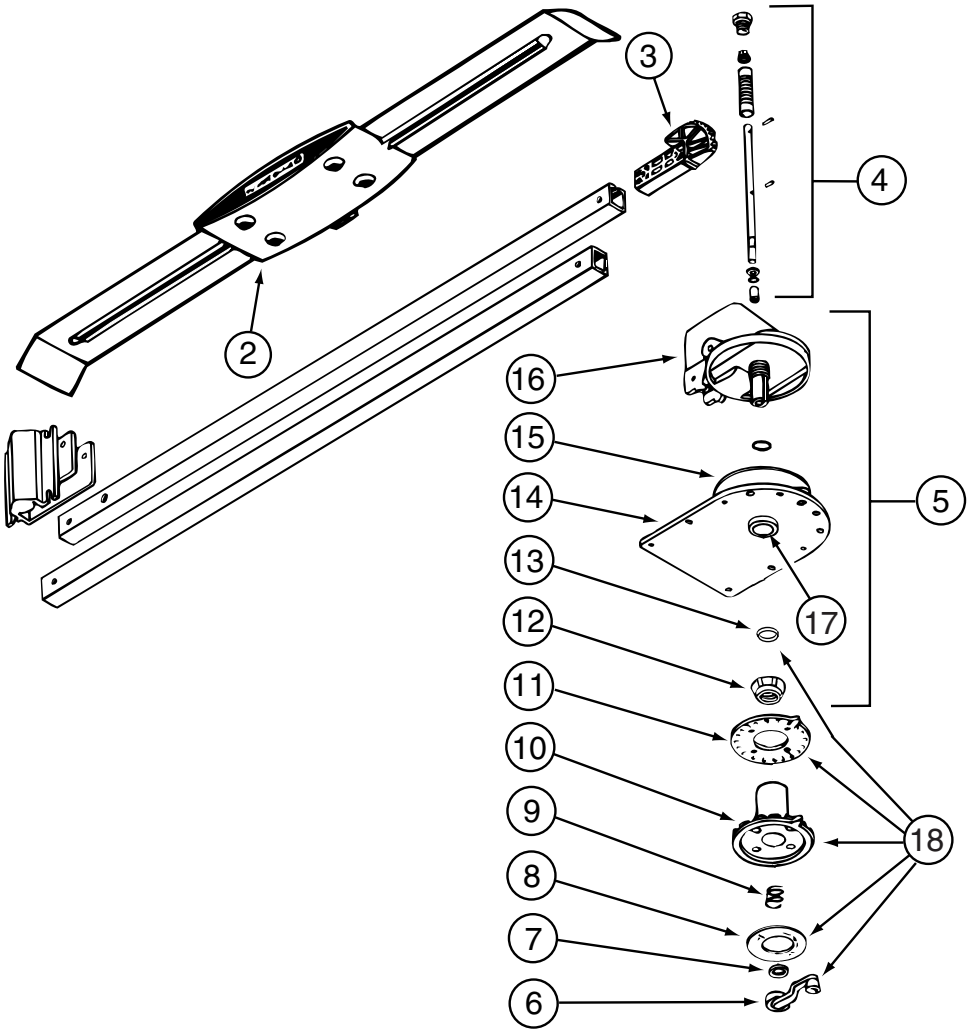

076319-23-000

KEY	PART NUMBER	U/M	DESCRIPTION	VENDOR NO.
2	076319-01-700	EA	HEAD-ANTENNA, AMPLIFIED	RVSA U/V
3	076319-01-701	EA	GEAR-ELEVATING, PLASTIC	2200046
4	076319-01-702	EA	SHAFT ASM-ELEVATING	RP-4000
5	076319-01-711	EA	BASE & LIFT ASM	2762802
7	076319-01-705	EA	GROMMET-NYLON, 7/8"ID	3200658
8	076319-01-708	EA	DECAL-CRANK	5413002
9	076319-01-707	EA	SPRING-HANDLE	2160822
11	076319-01-712	EA	PLATE - CEILING	3200608
12	076319-01-715	EA	NUT (GEAR HOUSING)	2200047
14	076319-01-713	EA	PLATE-BASE, STEEL	3100523
15	076319-01-703	EA	BEARING-NYLON, 5"OD	3200656
16	076319-01-714	EA	HOUSING, ROTATING GEAR	2200049
17	076319-01-704	EA	BEARING-NYLON, 1.25"OD	3200657
18	076319-01-709	EA	HANDLE-HEAD DIRECTIONAL	200644
	076319-01-716	EA	TUBING, ELEVATING	RP-2900
			CONTACT WINNEBAGO PART SALES FOR UNLISTED COMPONENT(S)	

076319-25-000

KEY	PART NUMBER	U/M	DESCRIPTION	VENDOR NO.
6	076319-01-706	EA	CRANK-W/SET SCREW UNIV/BEIGE	2750897
6	120233-01-710	EA	HANDLE-CRANK W/SCREW - WHITE	RP-6795
8	076319-01-708	EA	DECAL-CRANK	5413002
10	076319-25-700	EA	DIRECTIONAL HANDLE(WHITE)	3200612
11	076319-25-701	EA	PLATE - CEILING(WHITE)	3200609
13	120233-01-709	EA	WASHER-NYLON	RP-2658
			CONTACT WINNEBAGO PART SALES FOR UNLISTED COMPONENT(S)	

COPYRIGHT © 2009 WINNEBAGO INDUSTRIES INC.

ELECTRICAL GROUP (CONTINUED)

COMPONENT PARTS FOR WIRING (CONTINUED)

093575-47-01A

KEY	PART NUMBER	U/M	DESCRIPTION	VENDOR NO.
	093575-47-700	EA	GLOBE - GLASS	114-GLASS

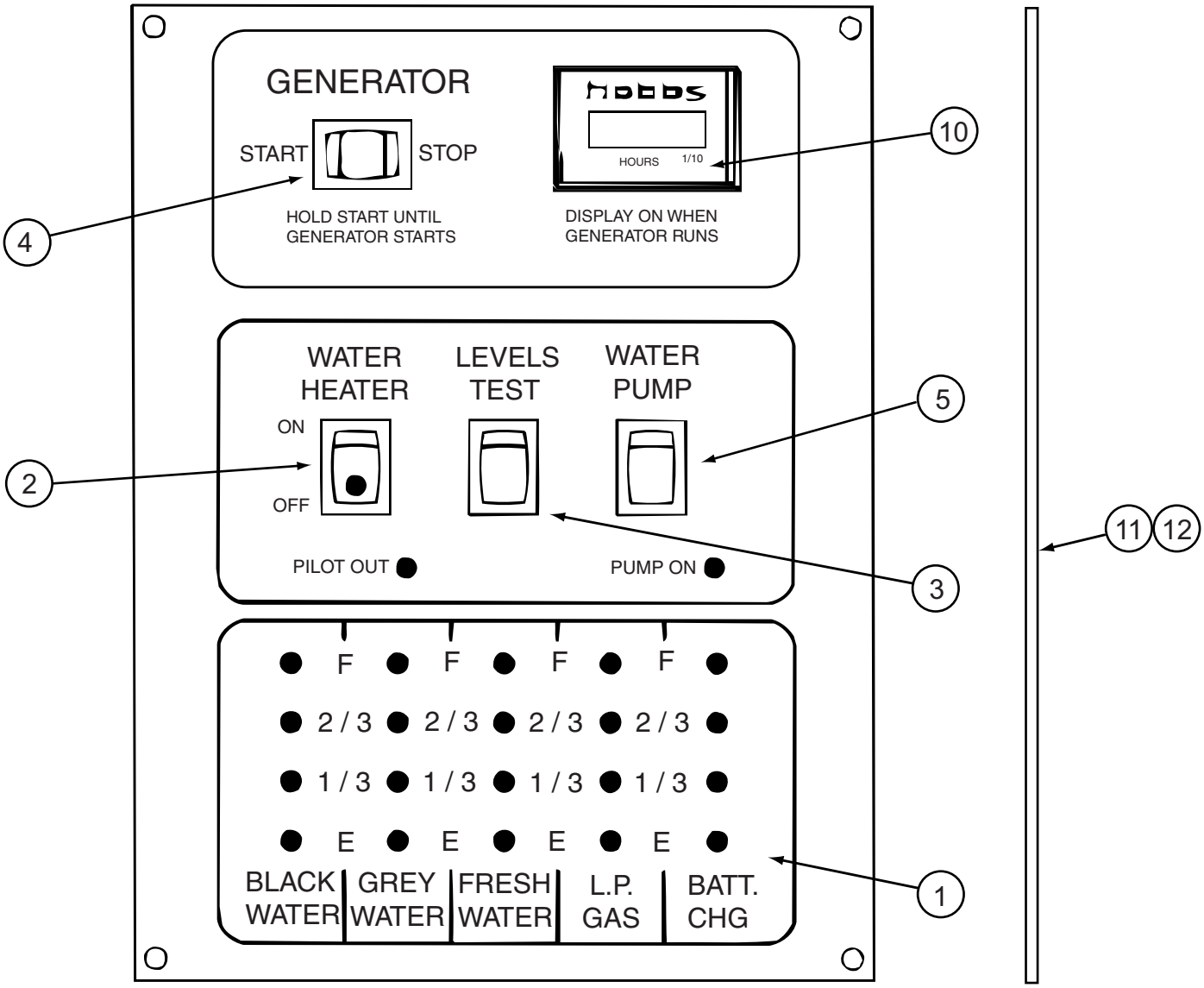

134940-06-01A

KEY	PART NUMBER	U/M	DESCRIPTION	VENDOR NO.
1	134940-01-702	EA	CHASSIS - SILKSCREENED	CC0558-00
2	134940-01-701	EA	SWITCH-SPST/ON-OFF/BLK W/LGT	L0109
3	096983-01-701	EA	SWITCH - SPST/MOM 2 TERMINAL	L0111-00
4	096983-01-702	EA	SWITCH - MOM/OFF/MOM/3 TERM	L0112-00
5	096983-01-703	EA	SWITCH - ON/ON	L0115-00
10	100258-10-701	EA	GAUGE-HR METER ONLY (LCD)	L0775-00
11	134940-06-700	EA	PC BOARD - SENSOR SYSTEM/RED	L5131-02
			CONTACT WINNEBAGO PART SALES FOR UNLISTED COMPONENT(S)	

134940-07-01A

KEY	PART NUMBER	U/M	DESCRIPTION	VENDOR NO.
1	134940-01-702	EA	CHASSIS - SILKSCREENED	CC0558-00
2	134940-01-701	EA	SWITCH-SPST/ON-OFF/BLK W/LGT	L0109
3	096983-01-701	EA	SWITCH - SPST/MOM 2 TERMINAL	L0111-00
4	096983-01-703	EA	SWITCH - ON/ON	L0115-00
5	134940-02-700	EA	SWITCH - DUMMY	L0118
11	134940-06-700	EA	PC BOARD - SENSOR SYSTEM/RED	L5131-02
			CONTACT WINNEBAGO PART SALES FOR UNLISTED COMPONENT(S)	

COPYRIGHT © 2009 WINNEBAGO INDUSTRIES INC.

ELECTRICAL GROUP (CONTINUED)

COMPONENT PARTS FOR WIRING (CONTINUED)

137417-01-01A, 137417-03-01A

KEY	PART NUMBER	U/M	DESCRIPTION	VENDOR NO.
	137417-01-700	EA	LENS - SINGLE (FROSTED)	810868

137417-02-01A

KEY	PART NUMBER	U/M	DESCRIPTION	VENDOR NO.
	137417-02-700	EA	LENS - SINGLE OPTIC	810844

137417-04-01A

KEY	PART NUMBER	U/M	DESCRIPTION	VENDOR NO.
	137417-06-700	EA	LENS - DOUBLE WHITE	810867

137417-05-01A

KEY	PART NUMBER	U/M	DESCRIPTION	VENDOR NO.
	137417-05-700	EA	LENS - DOUBLE OPTIC	810845

137417-06-01A

KEY	PART NUMBER	U/M	DESCRIPTION	VENDOR NO.
	137417-06-700	EA	LENS - DOUBLE WHITE	810867

153658-01-01A, 153658-01-02A

KEY	PART NUMBER	U/M	DESCRIPTION	VENDOR NO.
	153658-01-700	EA	LENS ONLY	8511LRC

160603-01-000

KEY	PART NUMBER	U/M	DESCRIPTION	VENDOR NO.
	160603-01-700	EA	REMOTE	DVD-1002-REM
	160603-01-701	EA	REMOTE SENSOR	DVD-1002-EYE

164270-01-000

KEY	PART NUMBER	U/M	DESCRIPTION	VENDOR NO.
	164270-01-700	EA	REMOTE	STS2891REM

164495-01-000

KEY	PART NUMBER	U/M	DESCRIPTION	VENDOR NO.
	164495-01-700	EA	REMOTE - TV	P301P19HS3409A

165170-01-01A

KEY	PART NUMBER	U/M	DESCRIPTION	VENDOR NO.
	165170-01-700	EA	LENS	81230-LENS

169151-01-000, 169151-02-000

KEY	PART NUMBER	U/M	DESCRIPTION	VENDOR NO.
	169154-01-700	EA	REMOTE - TV	RRMCGA667WJSA

170909-01-000

KEY	PART NUMBER	U/M	DESCRIPTION	VENDOR NO.
	170909-01-700	EA	REMOTE - SERVICE PACK	PSVCJE1909

COPYRIGHT © 2009 WINNEBAGO INDUSTRIES INC.

ELECTRICAL GROUP (CONTINUED)

CIRCUIT BREAKERS, FUSES & RELAYS

KEY	PART NUMBER	U/M	DESCRIPTION
	062901-02-000	EA	FUSE - 5 AMP - AUTOMOTIVE
	062901-03-000	EA	FUSE - 7.5 AMP - AUTOMOTIVE
	062901-05-000	EA	FUSE - 15 AMP - AUTOMOTIVE
	062901-06-000	EA	FUSE - 20 AMP - AUTOMOTIVE
	062901-07-000	EA	FUSE - 25 AMP - AUTOMOTIVE
	062901-08-000	EA	FUSE - 30 AMP - AUTOMOTIVE
	063910-01-000	EA	HOUSING - RELAY
	063912-02-000	EA	RELAY - CANISTER - SPDT
	083209-01-000	EA	CIRCUIT BREAKER - 15 AMP - 120 VOLT - CANADIAN
	083209-02-000	EA	CIRCUIT BREAKER - 15/15 AMP - 120 VOLT
	083209-03-000	EA	CIRCUIT BREAKER - 15/20 AMP - 120 VOLT
	083209-04-000	EA	CIRCUIT BREAKER - 30 AMP - 120 VOLT
	083209-05-000	EA	CIRCUIT BREAKER - 20 AMP - 120 VOLT
	083209-06-000	EA	CIRCUIT BREAKER - 30/15 AMP - 120 VOLT
	083209-07-000	EA	CIRCUIT BREAKER - 20/20 AMP - 120 VOLT
	083209-10-000	EA	CIRCUIT BREAKER - 20/30 AMP - 120 VOLT
	083209-11-000	EA	CIRCUIT BREAKER - 20/15 AMP - 120 VOLT
	092786-03-000	EA	BUSS BAR - 6.9" LONG
	092786-06-000	EA	BUSS BAR
	093654-01-000	EA	CIRCUIT BREAKER - 6 AMP - 12 VOLT - PUSH BUTTON - WHITE
	093654-02-000	EA	CIRCUIT BREAKER - 15 AMP - 12 VOLT - PUSH BUTTON - WHITE
	093654-03-000	EA	CIRCUIT BREAKER - 20 AMP - 12 VOLT - PUSH BUTTON - WHITE
	093654-05-000	EA	CIRCUIT BREAKER - 10 AMP - 12 VOLT - PUSH BUTTON - WHITE
	093655-01-000	EA	CIRCUIT BREAKER - 25 AMP - 12 VOLT - PUSH BUTTON - WHITE
	093655-02-000	EA	CIRCUIT BREAKER - 30 AMP - 12 VOLT - PUSH BUTTON - WHITE
	093655-03-000	EA	CIRCUIT BREAKER - 40 AMP - 12 VOLT - PUSH BUTTON - WHITE
	097611-03-000	EA	CIRCUIT BREAKER - 20 AMP
	113482-01-000	EA	CIRCUIT BREAKER - 55 AMP - MANUAL
	115187-01-000	EA	FUSE - 300 AMP - NON-DELAY
	115187-02-000	EA	HOLDER - FUSE
	115187-03-000	EA	FUSE - 150 AMP - NON-DELAY
	122811-01-000	EA	CIRCUIT BREAKER - 20/50/50/20 AMP - 250V
	141789-01-000	EA	SPACER - CIRCUIT BREAKER

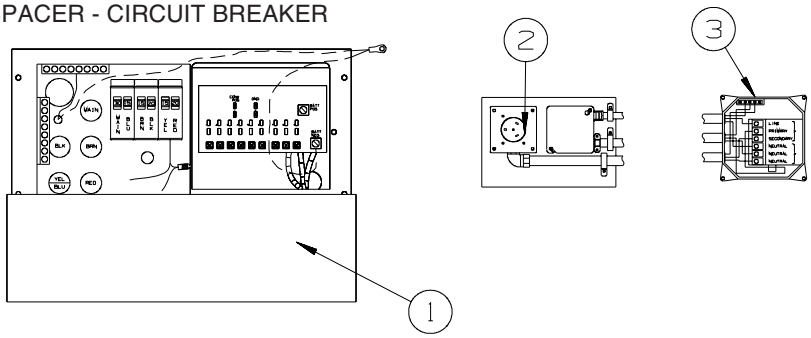

LOAD CENTER

CONVERTER, INVERTER & LOAD CENTER

KEY	PART NUMBER	U/M	DESCRIPTION
1*	083208-07-000	EA	CONTROL CENTER - 45 AMP - 120V/12V - W/O BREAKERS
2	024924-02-000	EA	RECEPTACLE - POWER CORD - W/PARTIAL PLATE
3	136481-01-000	EA	MODULE - AUTO ENERGY SELECTOR

***COMPONENT PARTS LISTED LATER IN THIS GROUP**

COMPONENT PARTS FOR CONVERTER, INVERTER & LOAD CENTER

083208-07-000

KEY	PART NUMBER	U/M	DESCRIPTION	VENDOR NO.
	083208-06-701	EA	CONVERTER ONLY (LOWER UNIT)	7345R

COPYRIGHT © 2009 WINNEBAGO INDUSTRIES INC.

ELECTRICAL GROUP (CONTINUED)

BOXES & CORDS

KEY	PART NUMBER	U/M	DESCRIPTION
	008054-01-000	EA	CORD - POWER - 10/3 WIRE - 30 AMP - 25'
	115832-01-000	FT	CORD - HEAVY DUTY - 14-2 W/GROUND
	008289-01-000	EA	BOX - ELECTRIC/STEEL - 4" X 4" - 1/2" & 3/4" KNOCKOUTS
	091910-01-000	EA	BOX - ELECTRIC - 3.8" X 3.5" X 1.8" - PLASTIC
	091910-02-000	EA	BOX - ELECTRIC - 2.2" X 3.5" X 1.8" - PLASTIC
	131679-01-000	EA	BOX/ELECTRIC-WATERPROOF-4" X 4" - W/4 3/4"OUTLETS-UL/CSA
	133070-01-000	EA	BOX - ELECTRIC/PLASTIC - 3" X 2" X 2.8" - UL
	133070-02-000	EA	BOX - ELECTRIC/PLASTIC - 3" X 2" X 2.8" - CSA - 265
	008294-01-000	EA	COVER - ELECTRIC BOX - BLANK/STEEL - 4" X 4" - GRAY
	069238-01-000	EA	COVER - ELECTRICAL BOX - W/HOLE - 4" X 4" - GRAY
	131680-01-000	EA	COVER - F/ELECTRIC BOX W/GASKET 4" X 4" - UL/CSA

WIRE ASSEMBLIES

KEY	PART NUMBER	U/M	DESCRIPTION
	077069-03-000	EA	CABLE/EXTENSION - RADIO ANTENNA - 260"
			FROM: 09-26-08 THRU: 99-99-99
	106851-01-000	EA	WIRE ASSEMBLY - RUNNING LIGHTS - FUSE - 265
	134551-08-000	EA	WIRE ASSEMBLY - HEATER/TANKS - 2 PAD -216.2"(LONGEST WIRE)
	134551-09-000	EA	WIRE ASSEMBLY - HEATER/TANKS - 2 PAD - 114"(LONGEST WIRE)
	134551-13-000	EA	WIRE ASSEMBLY - HEATER/TANKS - 2 PAD - 86.5"(LONGEST WIRE)
	142258-02-000	EA	WIRE LOOM - VIDEO SWITCH/POWER SUPPLY
	145210-01-000	FT	CABLE - COAXIAL
	151316-02-000	EA	WIRE ASM - W/NON CONTACT SENSORS - GREY WATER - 23.6"
	151316-03-000	EA	WIRE ASM - W/NON CONTACT SENSORS - GREY WATER - 43.2"
	151316-06-000	EA	WIRE ASM - W/NON CONTACT SENSORS - GREY WATER - 78.6"
	151317-01-000	EA	WIRE ASM-W/NON CONTACT SENSORS-FRESH WATER/BLK TANK-3.9"
	151317-02-000	EA	WIRE ASM-W/NON CONTACT SENSORS-FRESH WATER/BLK TANK-23.6"
	151317-03-000	EA	WIRE ASM-W/NON CONTACT SENSORS-FRESH WATER/BLK TANK-43.2"
	151317-06-000	EA	WIRE ASM-W/NON CONTACT SENSORS-FRESH WATER/BLK TANK-78.6"
	153891-01-000	EA	WIRE ASM-HEATER,RELAY
	155619-04-000	EA	WIRE ASSEMBLY-RADIO - F/UNITS W/O RADIO POWER SWITCH-FORD
	164038-01-000	EA	WIRE ASSEMBLY - TV/SIDE - 1MJ
	164495-02-000	EA	CABLE/POWER - TV - 1LK
			FROM: 00-00-00 THRU: 01-12-09
	170909-03-000	EA	ADAPTOR/DC POWER - 19" TV - CIGARETTE PLUG - 1LK
			FROM: 01-13-09 THRU: 99-99-99
	165808-02-000	EA	WIRE/CABLE - POWER - MB QUART #MBQLC-15U-P - 1LY
	165808-03-000	EA	WIRE/CABLE - POWER - W/CIGARETTE PLUG - 1LY, REMOVABLE TV
			FROM: 05-12-08 THRU: 99-99-99

COPYRIGHT © 2009 WINNEBAGO INDUSTRIES INC.

ELECTRICAL GROUP (CONTINUED)

CONNECTORS & CONDUIT

KEY	PART NUMBER	U/M	DESCRIPTION
	007940-01-000	EA	RECEPTACLE/SLIDE 16 TO 12 AWG - FEMALE END
	007940-02-000	EA	RECEPTACLE/SLIDE 10 AWG
	007954-01-000	EA	RECEPTACLE - HOUSING - 6 POSITION
	007956-05-000	EA	INSULATOR - SHRINK - 1/4"ID X 1 1/2"
	008311-01-000	EA	CONNECTOR - WIRE NUT - INSULATED - RED
	008312-01-000	EA	CONNECTOR - WIRE NUT - INSULATED - BLUE
	008313-01-000	EA	CONNECTOR - WIRE NUT - INSULATED - YELLOW
	008314-01-000	EA	CONNECTOR - WIRE NUT - INSULATED - GRAY
	008328-01-000	EA	TERMINAL - RING - 12/10 WIRE - #10 STUD FIT
	008331-01-000	EA	TERMINAL - RING - TONGUE - #4 WIRE - 3/8" STUD - COPPER
	008348-01-000	EA	TERMINAL - RING - 3/8" STUD 2 GA. WIRE
	008355-01-000	EA	CONNECTOR - CABLE CLAMPING - 3/4"
	008356-01-000	EA	CONNECTOR - PLASTIC - 3/8"
	008356-02-000	EA	CONNECTOR - PLASTIC - 21/32"
	035416-04-000	EA	TERMINAL - RING - #10 STUD FIT - INSULATED BARREL #16/14
	041953-01-000	FT	CONDUIT - CONVOLUTE SLIT - .5" ID - POLYETHYLENE
	041953-02-000	FT	CONDUIT - CONVOLUTE SLIT - .6" ID - POLYETHYLENE
	041953-03-000	FT	CONDUIT - CONVOLUTE SLIT - 1" ID (CLOTHES ROD COVER)
	041953-05-000	FT	CONDUIT - CONVOLUTE SLIT - .62" ID - POLYETHYLENE
	041953-06-000	FT	CONDUIT - CONVOLUTE SLIT - .4" ID - POLYETHYLENE
	041953-07-000	FT	CONDUIT - CONVOLUTE SLIT - .25" ID - POLYETHYLENE
	041953-08-000	FT	CONDUIT - CONVOLUTE SLIT - 1.5" ID - POLYETHYLENE
	041953-09-000	FT	CONDUIT - CONVOLUTE SLIT - .5" ID - NYLON
	041953-10-000	FT	CONDUIT - CONVOLUTE SLIT - .75" ID - NYLON
	041953-11-000	FT	CONDUIT - CONVOLUTE SLIT - 1.06" ID - NYLON
	041953-12-000	FT	CONDUIT - CONVOLUTE SOLID - 1.1" ID - NYLON
	041953-13-000	FT	CONDUIT - CONVOLUTE SLIT - 1.25" ID
	041953-14-000	FT	CONDUIT - CONVOLUTE SLIT - 1.5" ID
	041953-15-000	FT	CONDUIT - CONVOLUTE SLIT - 2"
	041953-16-000	FT	CONDUIT - CONVOLUTE SLIT - 2"
	047441-01-000	EA	TERMINAL-BATTERY, HORIZONTAL LUG
	047443-01-000	EA	TERMINAL - .250 RECEPTACLE FIT - INSULATED - 16/14 AWG
	047443-02-000	EA	TERMINAL - .250 RECEPTACLE FIT - INSULATED - 12/10 AWG
	047443-05-000	EA	TERMINAL - .250 RECEPTICLE FIT - 18GA AWG
	058028-01-000	EA	CONNECTOR - ELECTRICAL PIGTAIL - NYLON - CLEAR
	062036-01-000	EA	TERMINAL - PACK - CON - 12/10 AWG
	076319-12-000	EA	CONNECTOR - COAXIAL - ONE PIECE
	077479-02-000	EA	BOOT - BATTERY TERMINAL - SINGLE CABLE
	080015-02-000	EA	RECEPTACLE - FLAG - .185 - 16/14 GAUGE
	080015-03-000	EA	RECEPTACLE - FLAG - .250 - 14/16 GAUGE
	080015-04-000	EA	RECEPTACLE - FLAG - .187 - 16/14 GAUGE
	082109-01-000	EA	HOUSING - CONNECTOR - PACKARD
	082741-01-000	EA	CONNECTOR BODY - 2 CONNECTOR MALE
	087225-01-000	FT	SLEEVING - 1/2" - TYPE H
	088473-01-000	EA	HOUSING - PIN - 12 CAVITY (3 ROWS OF 4)
	088473-02-000	EA	HOUSING - PIN - 15 CAVITY (3 ROWS OF 5)
	088473-03-000	EA	HOUSING - PIN - 9 CAVITY (3 ROWS OF 3)
	088473-04-000	EA	HOUSING - PIN - 8 CAVITY IN-LINE
	088473-06-000	EA	HOUSING - PIN - 6 CAVITY (2 ROWS OF 3)
	088473-07-000	EA	HOUSING - PIN - 5 CAVITY - IN-LINE
	088473-08-000	EA	HOUSING - PIN - 4 CAVITY - IN-LINE
	088473-09-000	EA	HOUSING - PIN - 3 CAVITY - IN-LINE
	088473-10-000	EA	HOUSING - PIN - 2 CAVITY - IN-LINE
	088473-12-000	EA	HOUSING - PIN - 3 CAVITY - BLUE
	088473-13-000	EA	HOUSING - PIN - 3 CAVITY - GREEN
	088473-14-000	EA	HOUSING - PIN - 3 CAVITY - RED
	088474-01-000	EA	HOUSING - SOCKET - 12 CAVITY
	088474-02-000	EA	HOUSING - SOCKET - 15 CAVITY
	088474-03-000	EA	HOUSING - SOCKET - 9 CAVITY
	088474-06-000	EA	HOUSING - SOCKET - 6 CAVITY
	088474-07-000	EA	HOUSING - SOCKET - 5 CAVITY
	088474-08-000	EA	HOUSING - SOCKET - 4 CAVITY
	088474-09-000	EA	HOUSING - SOCKET - 3 CAVITY

COPYRIGHT © 2009 WINNEBAGO INDUSTRIES INC.

ELECTRICAL GROUP (CONTINUED)

CONNECTORS & CONDUIT (CONTINUED)

KEY	PART NUMBER	U/M	DESCRIPTION
	088474-10-000	EA	HOUSING - SOCKET - 2 CAVITY
	088475-01-000	EA	PIN - CONNECTOR - 14-20 AWG
	088475-02-000	EA	PIN - CONNECTOR - 10-12 AWG
	088476-01-000	EA	TERMINAL - ELECTRICAL
	088476-02-000	EA	SOCKET - CONNECTOR - 12-10 GA - PRE-TIN
	098261-01-000	EA	SOCKET - CONNECTOR - WEATHERPACK - 12 AWG
	098261-02-000	EA	SOCKET - CONNECTOR - WEATHERPACK - 14-18 AWG
	098262-01-000	EA	SEAL - CONNECTOR - WEATHERPACK
	098264-01-000	EA	HOUSING - 2 PIN - WEATHER PACK - MALE W/FEMALE PINS
	098264-02-000	EA	HOUSING - 2 PIN - WEATHER PACK - FEMALE W/MALE PINS
	098265-02-000	EA	PIN - CONNECTOR - WEATHER PACK
	102777-02-000	EA	TERMINAL - RING - #6 STUD - 10 AWG
	103608-01-000	EA	SOCKET - WEDGE BASE W/LEADS
	104100-01-000	EA	HOUSING - 1 POSITION - 75 AMPS
	104100-03-000	EA	TERMINAL - 75 AMP
	106007-02-000	EA	TERMINAL - FEMALE - 10-12 AWG
	110178-01-000	EA	HOUSING - WIPER MOTOR
	112823-01-000	EA	SPLICE - REDUCER - 16-14 TO 18-22
	113135-01-000	EA	TERMINAL - FEMALE - M/P - 14-16 - F/SEALED TERMINAL
	113308-01-000	EA	TERMINAL - FEMALE - M/P - 14-16 - 280
	113308-02-000	EA	TERMINAL - FEMALE - M/P - 14-18 - 280
	113468-01-000	EA	HOUSING - 2 POSITION-FEMALE-USED ON WIPER/WASHER WIRE ASM
	113468-02-000	EA	HOUSING - 2 POSITION - FEMALE
	115932-01-000	EA	CONNECTOR - FEMALE - 30 AMP/120 VOLT
	116811-01-000	EA	TERMINAL - .110 RECEPTACLE - 16-14 AWG
	118571-01-000	EA	CONNECTOR - 3-WAY - MALE/SEALED
	118571-02-000	EA	CONNECTOR - 3-WAY - FEMALE/SEALED
	118571-05-000	EA	LOCK - SECONDARY - FEMALE
	118571-06-000	EA	LOCK - SECONDARY - MALE
	118599-02-000	EA	TERMINAL - MALE - M/P - 280/14-12
	118820-01-000	EA	INSULATOR - TERMINAL
	129233-01-000	EA	HOUSING - 2-POSITION/FEMALE - 280-SERIES
	129233-02-000	EA	HOUSING - 2-POSITION/FEMALE - 280-SERIES
	129233-03-000	EA	HOUSING - 2-POSITION/FEMALE - 280-SERIES
	131681-01-000	EA	CONNECTOR - 3/4" SO CORD - UL/CS
	131681-02-000	EA	CONNECTOR - 3/4" SO CORD - UL/CS
	137207-01-000	EA	HOUSING - PIN - 2 CAVITY/HIGH AMP
	137208-01-000	EA	HOUSING - SOCKET - 2 CAVITY/HIGH AMP
	137209-01-000	EA	PIN - CONNECTOR - 10AWG/HIGH AMP
	137210-01-000	EA	SOCKET - CONNECTOR - 10 AWG/HIGH AMP
	138996-04-000	EA	CONNECTOR - LAMP
	142520-01-000	EA	TERMINAL - FEMALE - MINI-FIT 16
	142522-01-000	EA	HOUSING - 4 PIN/MALE - MINI FIT
	142522-02-000	EA	HOUSING - 6 PIN/MALE - MINI FIT
	142522-03-000	EA	HOUSING - 8 PIN/MALE - MINI FIT
	142522-04-000	EA	HOUSING - 10 PIN/MALE - MINI FIT
	142522-05-000	EA	HOUSING - 12 PIN/MALE - MINI FIT
	142522-06-000	EA	HOUSING - 14 PIN/MALE - MINI FIT
	142524-01-000	EA	HOUSING - 4 PIN/FEMALE - WEATHER PACK
	142524-02-000	EA	HOUSING - 4 PIN/FEMALE - WEATHER PACK
	144283-01-000	EA	CONNECTOR - 110V - F/USE WITH SOW WIRE - BLUE
	144283-02-000	EA	CONNECTOR - 110V - F/USE WITH NM ROMEX WIRE - CLEAR
	145171-01-000	EA	CONNECTOR - COAXIAL
	148335-01-000	EA	HOUSING - 8-POSITION/MALE - 280-GT SERIES
	148335-02-000	EA	HOUSING - 4-POSITION/MALE - 280-GT SERIES
	148335-03-000	EA	HOUSING - 6-POSITION/MALE - 280-GT SERIES
	149683-01-000	EA	HOUSING - F/5 CAVITY RECEPTACLE - W/SQUARE GUIDE PIN
	149683-02-000	EA	HOUSING - F/5 CAVITY RECEPTACLE - W/ROUND GUIDE PIN
	149686-01-000	EA	TERMINAL - .250 RECEPTACLE
	149687-01-000	EA	HOUSING - 2 POSITION/MALE - PACKARD
	149687-02-000	EA	LOCK - F/2 POSITION HOUSING - PACKARD
	149688-01-000	EA	TERMINAL - MALE - 16 GAUGE WIRE
	156035-01-000	EA	HOUSING - 12-POSITION/FEMALE - 280-GT SERIES

COPYRIGHT © 2009 WINNEBAGO INDUSTRIES INC.

ELECTRICAL GROUP (CONTINUED)

CONNECTORS & CONDUIT (CONTINUED)

KEY	PART NUMBER	U/M	DESCRIPTION
	156041-01-000	EA	TERMINAL - FEMALE - 16-12 - 280-GT SERIES
	156043-01-000	EA	HOUSING - 2-POSITION/FEMALE - 480-MP SERIES
	156043-02-000	EA	LOCK - F/2 POSITION HOUSING - 480 SERIES
	156044-01-000	EA	TERMINAL - FEMALE - 16-12 - 280-GT - F/SEALED HOUSING
	156045-01-000	EA	HOUSING - 10-POSITION/FEMALE - 280-GT SERIES
	156045-02-000	EA	HOUSING - 4-POSITION/FEMALE - 280-GT SERIES
	156045-03-000	EA	HOUSING - 8-POSITION/FEMALE - 280-GT SERIES
	156045-04-000	EA	HOUSING - 6-POSITION/FEMALE - 280-GT SERIES
	156207-01-000	EA	HOUSING - 6-POSITION/MALE - 150-GT SERIES
	156208-01-000	EA	TERMINAL - MALE - 18-16 - 150-GT SERIES
	157590-01-000	EA	TERMINAL - FEMALE - M/P - 10-12 - 630
	157592-01-000	EA	HOUSING - 7-POSITION/FEMALE - M/P
	157592-02-000	EA	LOCK - SECONDARY - F/7 POSITION HOUSING
	157656-01-01A	EA	CONNECTOR - DASH LIGHT - BLACK
	158357-01-000	EA	HOUSING - 3 PIN/MALE - MINI FIT
	158373-01-000	EA	HOUSING - SOCKET - 16 CAVITY - MINI MATE-N-LOCK
	158374-01-000	EA	SOCKET - 16-20 CAVITY - MINI MATE-N-LOCK
	164685-01-000	EA	HOUSING - PIN - 7-POSITION
	164687-01-000	EA	PIN - CONNECTOR - 16-14
	164689-01-000	EA	SEAL - CONNECTOR
	168450-01-000	EA	CONNECTOR/ADAPTER - COAX

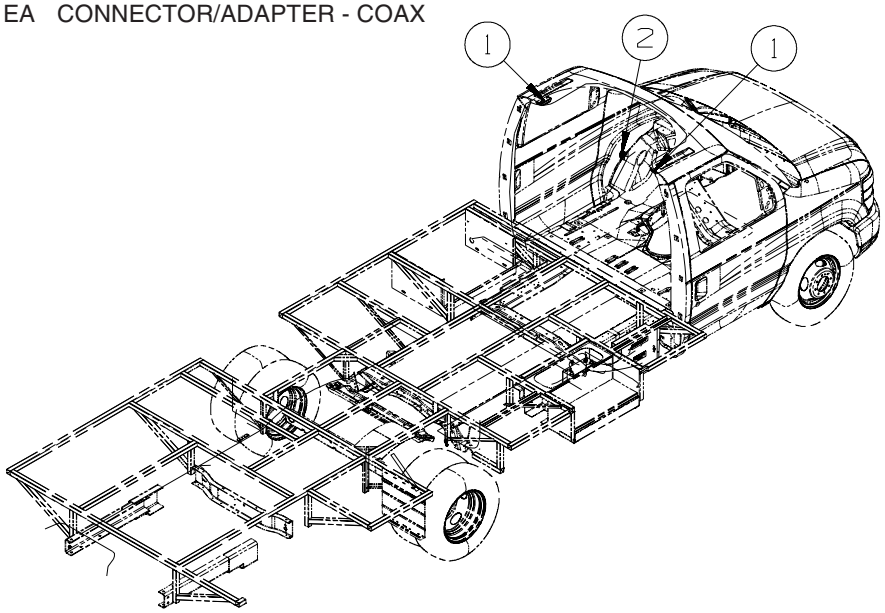

CHASSIS

KEY	PART NUMBER	U/M	DESCRIPTION
1*	086280-01-000	EA	LIGHT - SURFACE MOUNT - 12 VOLT
2	108357-09-000	EA	SWITCH - ROCKER - SPDT - ON/NONE/MOM - 3 TERM - W/O COVER
2	108356-07-01A	EA	COVER/ACTUATOR SWITCH - 2 ROWS DIMPLES - AUX START - BLACK
2	108355-01-000	EA	HOUSING - SWITCH
2	144363-07-04B	EA	PLATE - SWITCH - BLACK
	136514-08-000	EA	CABLE - MONITOR/CAMERA - 50'

***COMPONENT PARTS LISTED LATER IN THIS GROUP**

COPYRIGHT © 2009 WINNEBAGO INDUSTRIES INC.

ELECTRICAL GROUP (CONTINUED)

CHASSIS (CONTINUED)

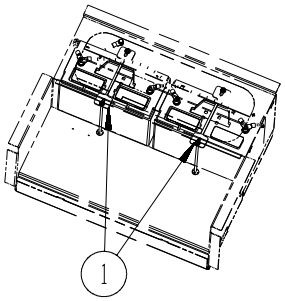

BATTERY INSTALLATION

KEY	PART NUMBER	U/M	DESCRIPTION
1	160014-03-02B	EA	TIEDOWN - BATTERY - E-COATED

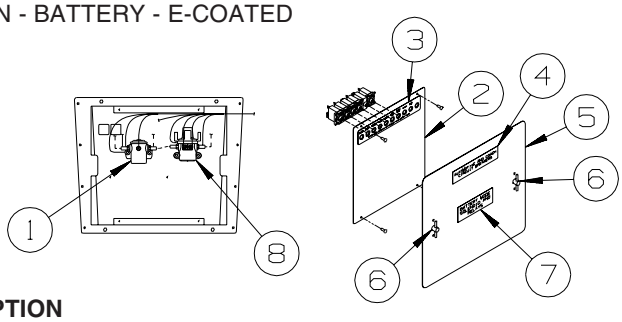

CHASSIS ELECTRICAL BOX

KEY	PART NUMBER	U/M	DESCRIPTION
1	008188-01-000	EA	SOLENOID - 3 POST - BATTERY CHANGE OVER
2	139067-10-02B	EA	PLATE - CIRCUIT BREAKER/HOUSE - E-COATED
3	093236-54-000	EA	LABEL - CIRCUIT BREAKER - MAIN
4	098379-01-000	EA	LABEL - CIRCUIT BREAKER - FRONT BOX
5	141273-05-02B	EA	COVER - ELECTRICAL BOX - E-COATED
6	098196-01-000	EA	LATCH - 1/4 TURN - T-BAR
7	098379-04-000	EA	LABEL - ELECTRICAL BOX - SIDE
8	086273-01-000	EA	RELAY - BATTERY DISCONNECT

COMPONENT PARTS FOR CHASSIS

086280-01-000

KEY	PART NUMBER	U/M	DESCRIPTION	VENDOR NO.
	086280-01-700	EA	BULB - 12 VOLT - #1414	ARP1089

COPYRIGHT © 2009 WINNEBAGO INDUSTRIES INC.

EXTERIOR BODY GROUP

GRAPHICS & PAINT

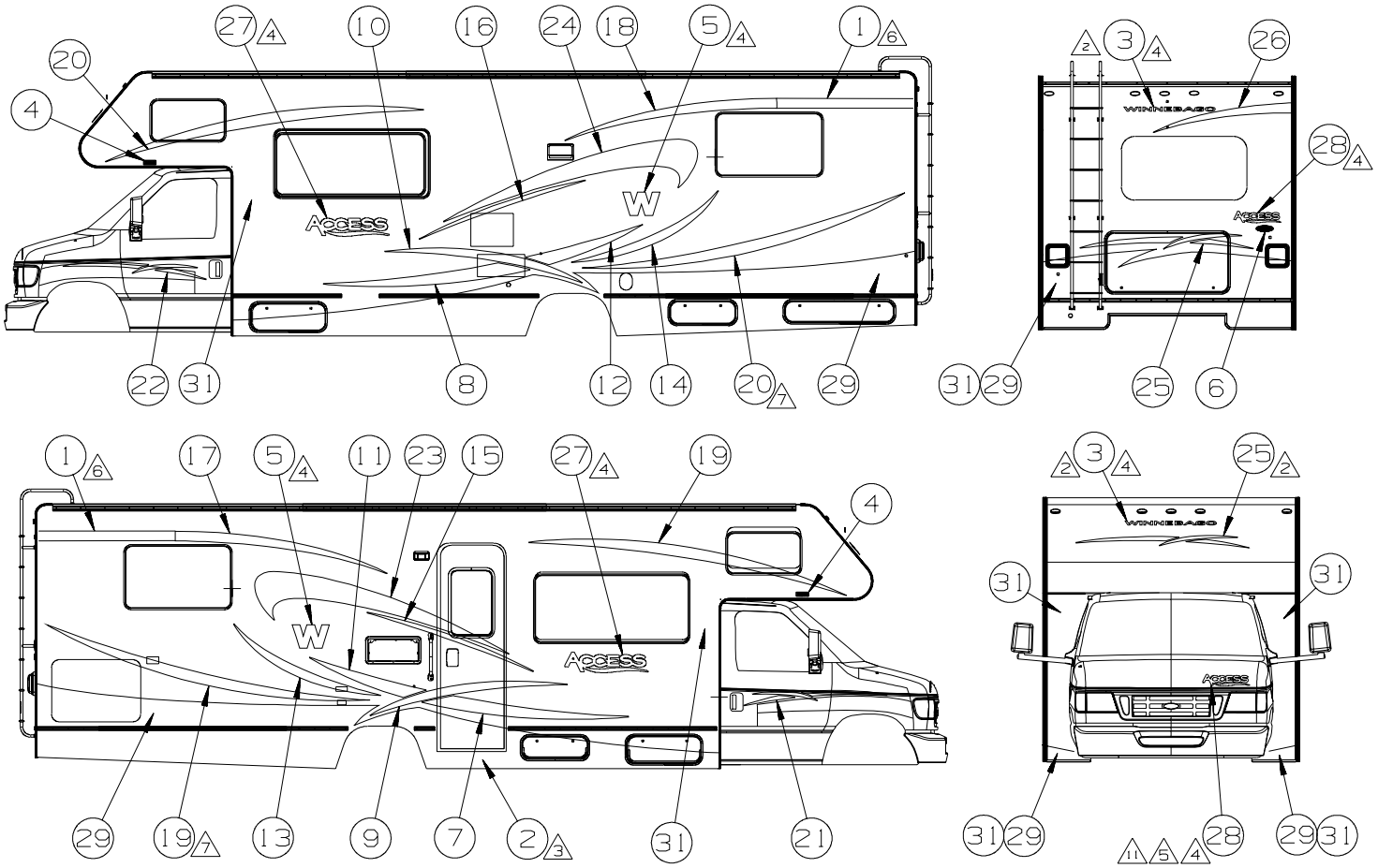

KEY	PART NUMBER (27G)	DESCRIPTION
1	093681-65-09A	FILM
2	109506-01-000	FILM-URETHANE PROTECTANT
3	120702-03-75A	DECAL-WINNEBAGO
4	132664-02-01A	DECAL-LOGO DOMED WINNEBAGO
5	135381-02-20A	DECAL-W
6	151687-01-01A	DECAL-DOMED NAMEPLATE WINNEBAGO
7	156398-01-03A	DECAL-SLASH #1 RH
8	156398-02-03A	DECAL-SLASH #1 LH
9	156399-01-03A	DECAL-SLASH #2 RH
10	156399-02-03A	DECAL-SLASH #2 LH
11	156401-01-03A	DECAL-SLASH #3 RH
12	156401-02-03A	DECAL-SLASH #3 LH
13	156402-01-03A	DECAL-SLASH #4 RH
14	156402-02-03A	DECAL-SLASH #4 LH
15	156403-01-04A	DECAL-SLASH #5 RH
16	156403-02-04A	DECAL-SLASH #5 LH
17	156404-01-03A	DECAL-SLASH #6 RH
18	156404-02-03A	DECAL-SLASH #6 LH
19	156405-01-05A	DECAL-SLASH #7 RH
20	156405-02-05A	DECAL-SLASH #7 LH
21	156406-01-03A	DECAL-CAB RH
22	156406-02-03A	DECAL-CAB LH
23	156407-01-03A	DECAL-HOOK RH
24	156407-02-03A	DECAL-HOOK LH
25	156408-01-03A	DECAL-SLASHES FRT & RR
26	156411-01-03A	DECAL-SLASHES RR
27	156415-01-01A	DECAL ACCESS LG
28	156415-02-01A	DECAL ACCESS SML
29	SW# 64255 / 141599-79-000 (26F) SW# 54469 / 141599-80-000 (26H)	PAINT
30	141599-27-000	CLEAR COAT
31	141599-41-000 (26J)	PAINT

11. LOCATE DECAL 290 MM LEFT OF HOOD EDGE AND 100 MM UP FROM FRONT EDGE OF HOOD. (CHEVY CAB)

10. CLEAR COAT TO BE APPLIED TO PAINTED AREAS TO PROTECT PAINT.

9. VINYL DECAL WILL BE APPLIED WHERE EVER GRAPHICS DESIGN PATTERN IS POSITIONED OVER SLIDEROOM EXTRUSION, BUT WILL NOT BE APPLIED TO VINYL SCREW COVER INSERTS.

8. REFER TO UNIT BUILD SCHEDULE TO DETERMINE BRAND OF PAINT TO BE USED. WHEN BUILT IN CC CDI PAINT USED IS SHERWIN WILLIAMS. WHEN BUILT IN FC PAINT USE IS DUPONT.

7. ON LONGER UNITS DECAL WILL BE USED IN MORE THAN ONE LOCATION.

6. TO BE USED ON LONGER UNITS ONLY.

5. LOCATE DECAL 240 MM LEFT OF HOOD EDGE AND 60 MM UP FROM FRONT EDGE OF HOOD. (FORD CAB)

4. LOGO IS TO BE ±1 MM ON A HORIZONTAL PLANE (END TO END).

3. FILM TO PROTECT BOTTOM OF DOOR FROM SCUFF MARKS.

2. CENTERED ON UNIT.

1. APPLY PROTECTOR 116424-01-000 TO WATER HEATER DOOR LATCH.

(26J) EXT GRAPH/PAINT DLX PKG 3

(26H) EXT GRAPHIC/PAINT-DLX PKG 2

(26F) EXT GRAPHIC/PAINT DLX PKG 1

(27G) EXTERIOR GRAPHICS PACKAGE #1

NOTES:

DUPONT COLOR CODES ARE NOW FOUND IN THE PAINT CODE MANUAL.
YOU CAN FIND THIS MANUAL ON YOUR DEALER INDEX WEBPAGE UNDER SERVICE.

COPYRIGHT © 2009 WINNEBAGO INDUSTRIES INC.

EXTERIOR BODY GROUP (CONTINUED)

PANELS & TRIMS

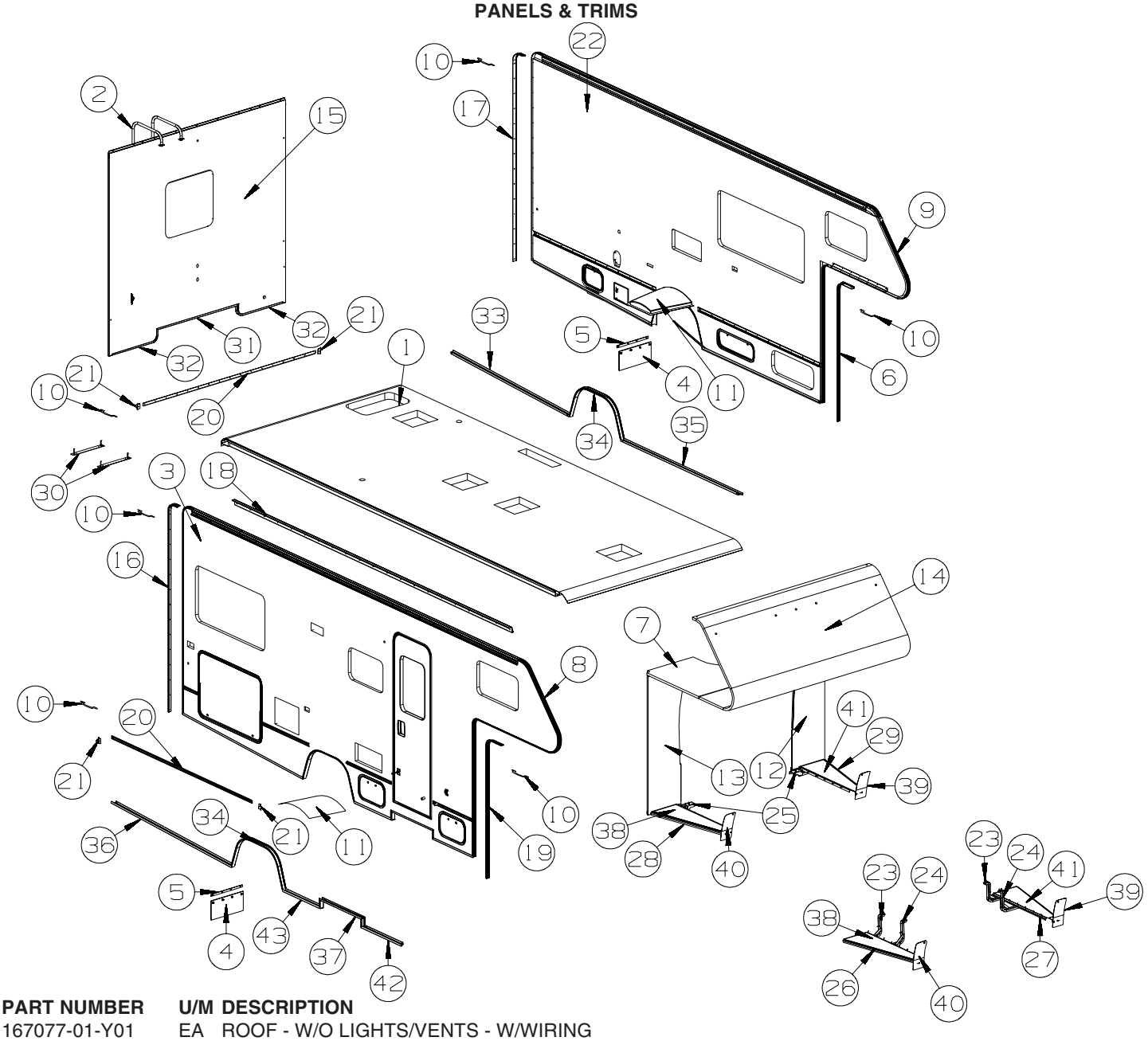

KEY	PART NUMBER	U/M	DESCRIPTION
1	167077-01-Y01	EA	ROOF - W/O LIGHTS/VENTS - W/WIRING
2	129639-05-01A	EA	LADDER - 95.5" - 7 STEP - BRUSHED ALUMINUM
3	P67075-01-Y01	EA	SIDEWALL - PASSENGER - W/O WINDOWS/TRIMS (Y01, Y02)
3	P67075-01-Y03	EA	SIDEWALL - PASSENGER - W/O WINDOWS/TRIMS (Y03)
4	017516-05-000	EA	MUD FLAP - 9"H X 18"W - RUBBER - BLACK
5	140922-01-02B	EA	RETAINER - MUD FLAP - 1" X 17.7" - E-COATED/BLACK
6	104479-10-02A	EA	TRIM - WINGWALL - DRIVER SIDE - VERTICAL - BRIGHT WHITE
7	125129-01-U01	EA	SLEEPERBOARD
8	136826-07-01A	EA	TRIM - CONTOUR - 99.2" - BRIGHT WHITE
9	136826-08-01A	EA	TRIM - CONTOUR - 99.2" - BRIGHT WHITE
10	105312-01-07A	FT	INSERT - FEATURE STRIP - VINYL - BRIGHT WHITE
11	112435-03-000	EA	WHEELWELL
12	159600-05-Y01	EA	WINGWALL - DRIVER
13	159600-01-T11	EA	WINGWALL - PASSENGER
14	155962-01-Y01	EA	ROOF - FRONT SECTION - W/O LIGHTS/VENTS - W/WIRING
15	P67078-01-Y01	EA	BACKWALL - W/O WINDOW/TRIMS (Y01, Y02)
15	P67078-01-Y03	EA	BACKWALL - W/O WINDOW/TRIMS (Y03)
16	160807-01-01A	EA	TRIM - CONTOUR/PASSENGER - 98.7" - W/O INSERT - BRIGHT WHITE
17	160807-02-01A	EA	TRIM - CONTOUR/DRIVER - 98.7" - W/O INSERT - BRIGHT WHITE
18	156840-01-01A	EA	RAIL - AWNING - 192" - BRIGHT WHITE
	105312-01-07A	FT	INSERT - FEATURE STRIP - VINYL - BRIGHT WHITE
	108651-01-03A	EA	END CAP - FEATURE STRIP - BRIGHT WHITE

COPYRIGHT © 2009 WINNEBAGO INDUSTRIES INC.

EXTERIOR BODY GROUP (CONTINUED)

PANELS & TRIMS (CONTINUED)

KEY	PART NUMBER	U/M	DESCRIPTION
19	104479-09-02A	EA	TRIM - WINGWALL - PASSENGER SIDE - VERTICAL - BRIGHT WHITE
20	108688-06-03A	EA	STRIP - FEATURE - W/O INSERT/END CAPS - 96.9" - BRIGHT WHT
21	108651-01-03A	EA	END CAP - FEATURE STRIP - BRIGHT WHITE
	108651-01-01A	EA	END CAP - FEATURE STRIP - UNPAINTED
22	P67076-01-Y01	EA	SIDEWALL - DRIVER - W/O WINDOWS/TRIMS (Y01, Y02)
22	P67076-01-Y03	EA	SIDEWALL - DRIVER - W/O WINDOWS/TRIMS (Y03)
23	159045-05-01A	EA	BRACKET/SUPPORT - F/RUNNING BOARD - GALVONIZED - 1PY
24	159045-04-01A	EA	BRACKET/SUPPORT - F/RUNNING BOARD - GALVONIZED - 1PY
25	146180-02-02B	EA	BRACKET - RUNNING BOARD - E-COATED
26	159045-01-01A	EA	BOARD - RUNNING - RIGHT HAND/TAPPERED - BLACK - 1PY
27	159045-02-01A	EA	BOARD - RUNNING - LEFT HAND/TAPPERED - BLACK - 1PY
28	146148-01-01A	EA	BOARD - RUNNING - RIGHT HAND/TAPPERED - BLACK
29	146148-02-01A	EA	BOARD - RUNNING - LEFT HAND/TAPPERED - BLACK
30	156675-02-02B	EA	STRAP - WATER TANK - E-COATED
31	103335-02-02A	EA	TRIM - BACKWALL - LOWER/CENTER - 46.3" - BRIGHT WHITE
32	156623-03-02A	EA	TRIM - BACKWALL/LOWER - 27" - BRIGHT WHITE
33	168193-35-01A	EA	TRIM/SIDEWALL - U-CHANNEL - 1.7" X .8" X 82.9" - BRIGHT WHITE
33	168193-35-03A	EA	TRIM/SIDEWALL - U-CHANNEL - 1.7" X .8" X 82.9" - BLACK
34	127848-02-01A	EA	TRIM - WHEELWELL - BRIGHT WHITE
35	168193-36-01A	EA	TRIM/SIDEWALL - U-CHANNEL - 1.7" X .8" X 82" - BRIGHT WHITE
35	168193-36-03A	EA	TRIM/SIDEWALL - U-CHANNEL - 1.7" X .8" X 82" - BLACK
36	168193-34-01A	EA	TRIM/SIDEWALL - U-CHANNEL - 1.7" X .8" X 82.9" - BRIGHT WHITE
36	168193-34-03A	EA	TRIM/SIDEWALL - U-CHANNEL - 1.7" X .8" X 82.9" - BLACK
37	168170-04-W01	EA	TRIM - PASSENGER SIDEWALL W/ENTRY DOOR NOTCH - 82.2" - BRIGHT WHITE
37	168170-04-AA1	EA	TRIM - PASSENGER SIDEWALL W/ENTRY DOOR NOTCH - 82.2" - BLACK
	159670-03-02A	EA	TRIM/SIDEWALL - U-CHANNEL - 1.8" X .8" X 29.6" - MILL
	159670-48-02A	EA	TRIM/SIDEWALL - U-CHANNEL - 1.8" X .8" X 4.5" - MILL
	168193-04-02A	EA	TRIM/SIDEWALL - U-CHANNEL - 1.7" X .8" X 27.5" - MILL
	168193-33-02A	EA	TRIM/SIDEWALL - U-CHANNEL - 1.7" X .8" X 26.2" - MILL
38	146515-01-01A	EA	MAT - ANTI SLIP - RIGHT HAND - BLACK
39	146148-04-01A	EA	GUARD - MUD FLAP/LEFT - BLACK
40	146148-03-01A	EA	GUARD - MUD FLAP/RIGHT - BLACK
41	146515-02-01A	EA	MAT - ANTI SLIP - LEFT HAND- BLACK
42	168193-04-02A	EA	TRIM/SIDEWALL - U-CHANNEL - 1.7" X .8" X 27.5" - MILL
43	168193-33-02A	EA	TRIM/SIDEWALL - U-CHANNEL - 1.7" X .8" X 26.2" - MILL

COPYRIGHT © 2009 WINNEBAGO INDUSTRIES INC.

EXTERIOR BODY GROUP (CONTINUED)

PANELS & TRIMS (CONTINUED)

BODY SECTIONS

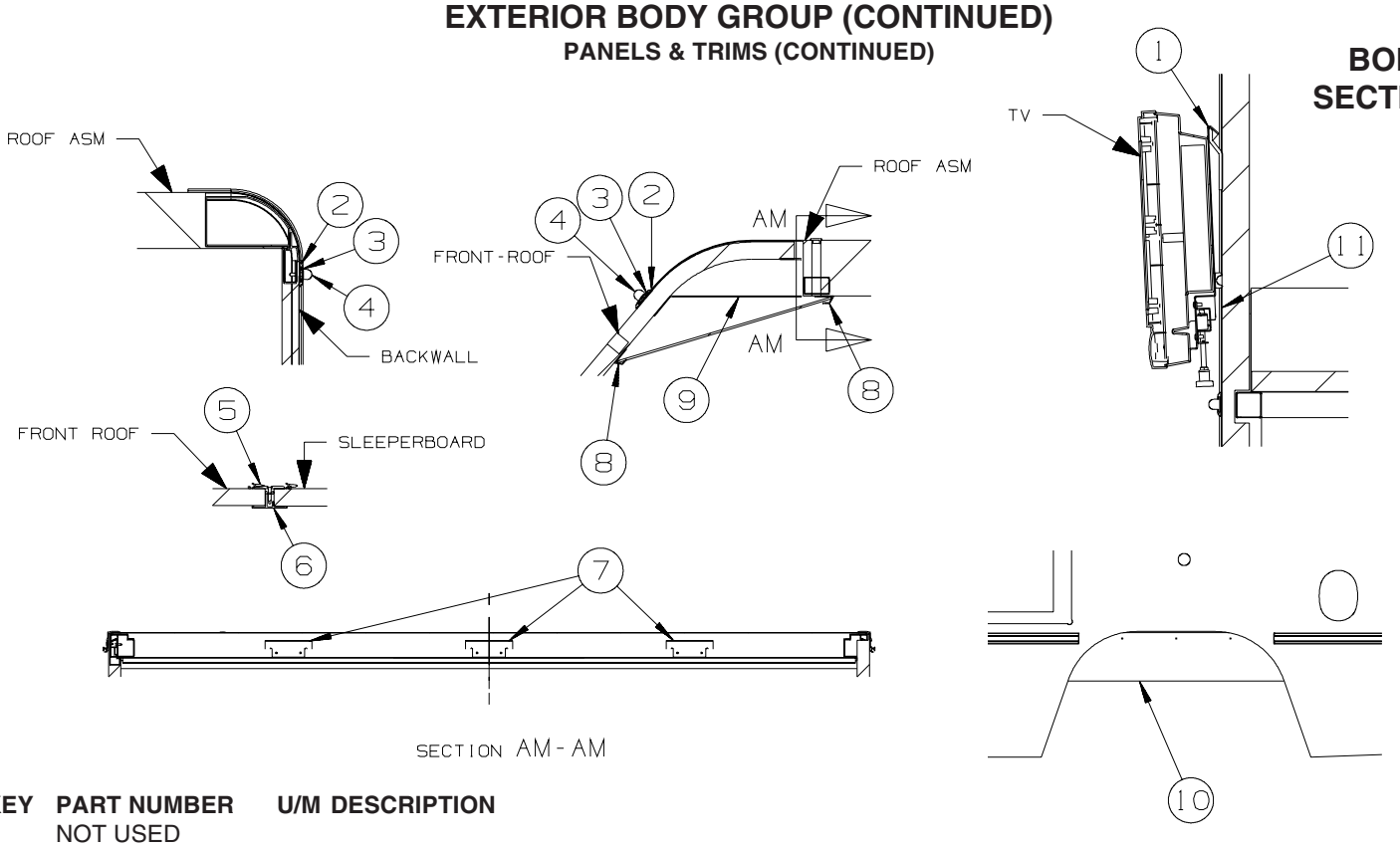

KEY	PART NUMBER	U/M	DESCRIPTION
1	NOT USED		
2	108688-08-03A	EA	STRIP - FEATURE - W/O INSERT/END CAPS - 95.9" - BRIGHT WHT
3	105312-01-07A	FT	INSERT - FEATURE STRIP - VINYL - BRIGHT WHITE
4	108651-01-03A	EA	END CAP - FEATURE STRIP - BRIGHT WHITE
	108651-01-01A	EA	END CAP - FEATURE STRIP - UNPAINTED
5	100085-05-01A	EA	TRIM/STRAP - SLEEPERBOARD - OFF/WHITE - 92.9"
6	100086-03-02A	EA	TRIM - SLEEEPER BOARD/ROOF/LWR - 2" X 96.5" - BRT WHT
7	134774-04-02B	EA	BRACKET - CAP ATTACHMENT - E-COATED
8	141829-01-01A	EA	TRIM - J MOLDING - OFF WHITE - 96"
9	156794-01-02B	EA	BRACKET/SUPPORT - 25" - E-COATED
10	121948-02-000	EA	SHIELD - SIGHT
11	NOT USED		

COPYRIGHT © 2009 WINNEBAGO INDUSTRIES INC.

EXTERIOR BODY GROUP (CONTINUED)

MIRRORS

KEY	PART NUMBER	U/M	DESCRIPTION
*	133908-10-01A	EA	MIRROR/PASS - 102" C BODY/FORD 4-BOLT MT - BRIGHT WHITE
*	133908-11-01A	EA	MIRROR/DRVR - 102" C BODY/FORD 4-BOLT MT - BRIGHT WHITE
*	167450-01-03A	EA	MIRROR/PASS - 102" C BODY/FORD - HEATED/REMOTE - BLK/BLK - 28X
*	167450-02-03A	EA	MIRROR/DRVR - 102" C BODY/FORD - HEATED/REMOTE - BLK/BLK - 28X
*	133908-05-02A	EA	MIRROR/PASS - 102" WIDE BODY/CHEVY - BRIGHT WHITE - 1PY
*	133908-06-02A	EA	MIRROR/DRVR - 102" WIDE BODY/CHEVY - BRIGHT WHITE - 1PY
*	167450-03-03A	EA	MIRROR/PASS - 102" C BODY/CHEVY - HEATED/REMOTE - BLK/BLK - 1PY/28X
*	167450-04-03A	EA	MIRROR/DRVR - 102" C BODY/CHEVY - HEATED/REMOTE - BLK/BLK - 1PY/28X

***COMPONENT PARTS LISTED LATER IN THIS GROUP**

COMPONENT PARTS FOR MIRRORS

133908-05, 133908-06, 133908-10, 133908-11, 133908-14, 133908-15, -01A/02A

KEY	PART NUMBER	U/M	DESCRIPTION	VENDOR NO.
	117051-01-700	EA	MIRROR-CONVEX	723068-4
	120269-01-700	EA	GLASS KIT W/BEZEL RH/LH	709407-8
	133908-03-700	EA	CAP - RECT/BLACK-W/O LIGHT	709557
	133908-04-700	EA	CAP-MIRROR/ROUND - W/O LIGHT	7095470

167450-01-03A

KEY	PART NUMBER	U/M	DESCRIPTION	VENDOR NO.
	167450-01-704	EA	MIRROR HEAD - RIGHT - BLACK	715990
	167450-01-706	EA	FLAT GLASS KIT-HEATED/RIGHT	716104
	167450-01-707	EA	CONVEX GLASS KIT - RIGHT	716106
	167450-01-710	EA	MOTOR - W/WIRE HARNESS	747832
	167450-01-711	EA	GASKETS(2)-BASE MOUNT-FORD	709743
	167450-01-715	EA	ARM CVR KIT-102" RH & LH-BLK	716113

167450-02-03A

KEY	PART NUMBER	U/M	DESCRIPTION	VENDOR NO.
	167450-01-705	EA	MIRROR HEAD - LEFT - BLACK	715989
	167450-01-708	EA	FLAT GLASS KIT - HEATED/LEFT	716103
	167450-01-709	EA	CONVEX GLASS KIT - LEFT	716105
	167450-01-710	EA	MOTOR - W/WIRE HARNESS	747832
	167450-01-711	EA	GASKETS(2)-BASE MOUNT-FORD	709743
	167450-01-715	EA	ARM CVR KIT-102" RH & LH-BLK	716113

167450-03-03A

KEY	PART NUMBER	U/M	DESCRIPTION	VENDOR NO.
	167450-01-706	EA	FLAT GLASS KIT-HEATED/RIGHT	716104
	167450-01-707	EA	CONVEX GLASS KIT - RIGHT	716106
	167450-01-710	EA	MOTOR - W/WIRE HARNESS	747832
	167450-01-712	EA	COVER PLATE(2)-GASKET-HDW-GM	709785
	167450-01-715	EA	ARM CVR KIT-102" RH & LH-BLK	716113
	167450-03-700	EA	MIRROR HEAD - RIGHT-BLACK-GM	716012

167450-04-03A

KEY	PART NUMBER	U/M	DESCRIPTION	VENDOR NO.
	167450-01-708	EA	FLAT GLASS KIT - HEATED/LEFT	716103
	167450-01-709	EA	CONVEX GLASS KIT - LEFT	716105
	167450-01-710	EA	MOTOR - W/WIRE HARNESS	747832
	167450-01-712	EA	COVER PLATE(2)-GASKET-HDW-GM	709785
	167450-01-715	EA	ARM CVR KIT-102" RH & LH-BLK	716113
	167450-03-701	EA	MIRROR HEAD - LEFT -BLACK-GM	716011

COPYRIGHT © 2009 WINNEBAGO INDUSTRIES INC.

EXTERIOR BODY GROUP (CONTINUED)

STRUCTURAL COMPONENTS

KEY	PART NUMBER	U/M	DESCRIPTION
	002365-03-006	EA	U-CHANNEL - EXTRUDED - 1" X 192" - BRIGHT WHITE
	002726-01-001	EA	GARNISH - U-CHANNEL - 1.38" X 19' - SERRATED
	002766-01-001	EA	ANGLE - EXTRUDED - 1" X 1 1/2" X 17'
	076054-AC-000	EA	FIBERGLASS SHEET - 20" X 99.8" - OFF WHITE
	108535-10-01A	SF	FIBERGLASS SHEET - 99" X 500' ROLL - BRIGHT WHITE
	162931-06-01A	EA	FIBERGLASS SHEET - 56.4" X 99.8" - BRIGHT WHITE
	162931-15-01A	EA	FIBERGLASS SHEET - 4" X 93.8" - BRIGHT WHITE
	162931-22-01A	EA	FIBERGLASS SHEET - 102.6" X 348.7" - BRIGHT WHITE
	162931-23-01A	EA	FIBERGLASS SHEET - 71.8" X 99.8" - BRIGHT WHITE
	162931-24-01A	EA	FIBERGLASS SHEET - 107.3" X 100.2" - BRIGHT WHITE
	162931-33-01A	EA	FIBERGLASS SHEET - 30.9" X 69.3" - BRIGHT WHITE
	089297-01-000	SF	PLYWOOD - LUAN - OVERLAY GRADE - 2.7MM X 4' X 8'
	089297-03-000	SF	PLYWOOD - LUAN - OVERLAY GRADE - 2.7MM X 4' X 8.3'
	089297-05-000	SF	PLYWOOD - LUAN - OVERLAY GRADE - 3.4MM X 4' X 8'
	089297-06-000	SF	PLYWOOD - LUAN - OVERLAY GRADE - 3.4MM X 4' X 8.3'
	100619-01-000	BF	FOAM - EXPANDED POLYSTYRENE - 1.34" X 48" X 96"
	100619-02-000	BF	FOAM - EXPANDED POLYSTYRENE - 1.5" X 48" X 96"
	100619-04-000	BF	FOAM - EXPANDED POLYSTYRENE - .5" X 48" X 96"
	100619-05-000	BF	FOAM - EXPANDED POLYSTYRENE - .75" X 48" X 96"-1.5"DENSITY
	100619-16-000	BF	FOAM - EXPANDED POLYSTYRENE - .75" X 48" X 96"-2" DENSITY
	100619-27-000	BF	FOAM - EXPANDED POLYSTYRENE - 3" X 48" X 92.8"
	116942-03-01A	LB	ALUMINUM - .7" X 40" X 158"

AWNINGS

KEY	PART NUMBER	U/M	DESCRIPTION
	113874-11-01A	EA	SCREW/LAG - AWNING - 1/4" X 1" STAINLESS STEEL
	113874-12-01A	EA	SCREW/LAG - AWNING - 1/4" X 2 3/4" STAINLESS STEEL
	127647-02-01A	EA	ROD/AWNING GUARD - ENTRY DOOR - 12.7" LONG
	127960-01-01A	EA	RETAINER - EYE - 3/8" - STAINLESS STEEL
	161739-01-02A	EA	BRACKET - AWNING - BRIGHT WHITE

ORDER AWNINGS & REPAIR PARTS FROM DOMETIC AT #800-366-3842 OR CAREFREE AT #800-621-2617 OR ONLINE AT WWW.E-CAREFREE.COM.

THE AWNING INFORMATION YOU WILL NEED IS LOCATED ON THE MOTOR HOME NEAR THE TOP OF THE AWNING RAIL.

COPYRIGHT © 2009 WINNEBAGO INDUSTRIES INC.

EXTERIOR DOORS & COMPARTMENTS GROUP

DOORS & COMPARTMENTS LAYOUT

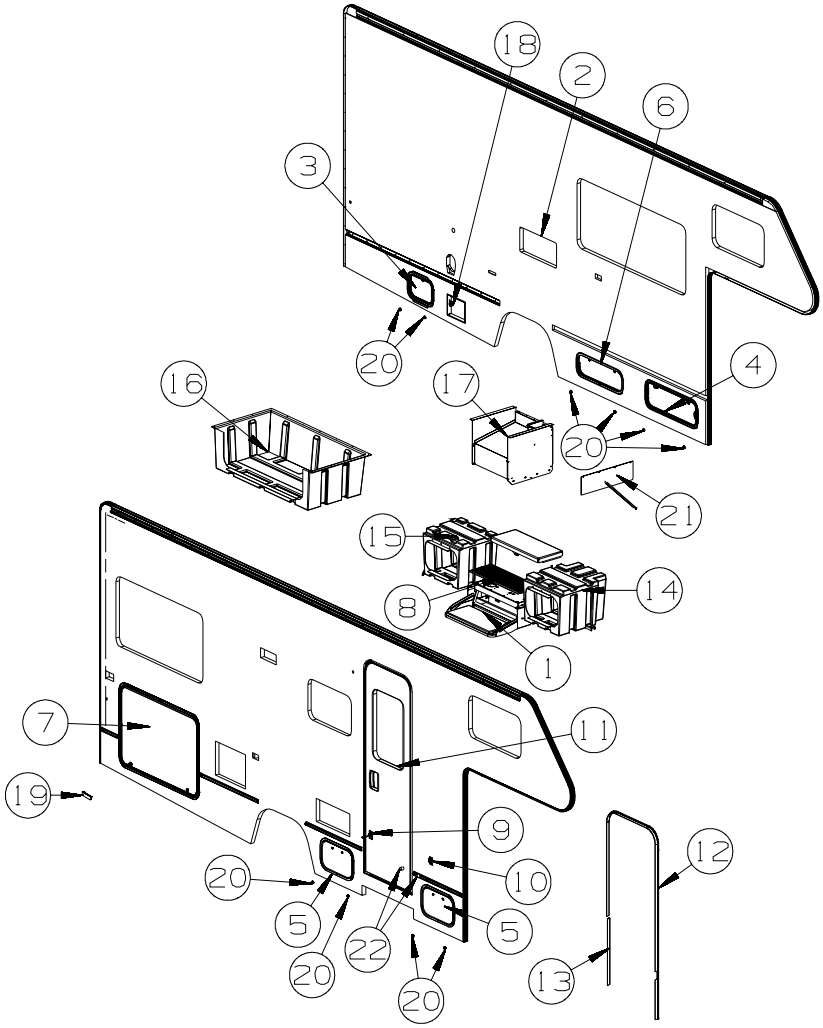

KEY	PART NUMBER	U/M	DESCRIPTION
1	139748-04-04B	EA	STEP/PULLOUT - W/BRACKETS - BLACK
	102569-04-000	EA	MAT - ANTI SLIP
1*	094708-05-01A	EA	STEP - ELECTRIC - SINGLE - BLACK - KWIKEE - 1E2
	116975-01-01A	EA	LATCH - W/O STRIKE - BLACK - NEW STYLE
	151104-01-01A	FT	SEAL - BULB - W/WIRED U CHANNEL - .3" X .5" CHANNEL-BLACK
2*	172626-01-01A	EA	DOOR - VENT - REFRIGERATOR - W/O JAMB - BRIGHT WHITE
2	172627-01-01A	EA	JAMB - VENT DOOR/REFRIGERATOR - BRIGHT WHITE
3	126945-17-U01	EA	DOOR/STORAGE - W/O HARDWARE - 14.4" X 10" - BRIGHT WHITE
3	126945-17-AA1	EA	DOOR/STORAGE - W/O HARDWARE - 14.4" X 10" - BLACK
	056795-01-000	FT	TAPE/SEAL - 1/8" X 3/8" WIDE - PRESS ON
	156622-01-01A	FT	SEALER - TAPE - 1/4"THICK X 3"WIDE X 100 FT - WHITE
4	126946-62-S95	EA	DOOR/STORAGE - W/O HARDWARE - 28.9" X 10.6" - BRIGHT WHITE
4	126946-62-AA1	EA	DOOR/STORAGE - W/O HARDWARE - 28.9" X 10.6" - BLACK
	056795-01-000	FT	TAPE/SEAL - 1/8" X 3/8" WIDE - PRESS ON
	076767-07-000	EA	CABLE - STAINLESS STEEL - 7.1"
	156622-01-01A	FT	SEALER - TAPE - 1/4"THICK X 3"WIDE X 100 FT - WHITE
5	126946-68-U01	EA	DOOR/STORAGE - W/O HARDWARE - 17.1" X 10.6" - BRIGHT WHITE
5	126946-68-AA1	EA	DOOR/STORAGE - W/O HARDWARE - 17.1" X 10.6" - BLACK
	056795-01-000	FT	TAPE/SEAL - 1/8" X 3/8" WIDE - PRESS ON
6	126946-71-U01	EA	DOOR/STORAGE - W/O HARDWARE - 25.6" X 8.9" - BRIGHT WHITE
6	126946-71-AA1	EA	DOOR/STORAGE - W/O HARDWARE - 25.6" X 8.9" - BLACK
	056795-01-000	FT	TAPE/SEAL - 1/8" X 3/8" WIDE - PRESS ON
	156622-01-01A	FT	SEALER - TAPE - 1/4"THICK X 3"WIDE X 100 FT - WHITE
7	126946-76-U01	EA	DOOR/STORAGE - W/O HARDWARE - 42.9" X 30.2" - BRIGHT WHITE
	056795-01-000	FT	TAPE/SEAL - 1/8" X 3/8" WIDE - PRESS ON
8	133114-03-01A	EA	TREAD - STEP/RUBBER - 27.1" X 10.1" - TAUPE - 28E
9	104099-01-04A	EA	CATCH - DOOR HOLDER - STRIKE - 3.9" - BRIGHT WHITE
10	104099-02-04A	EA	CATCH/RETAINER - DOOR HOLDER - BRIGHT WHITE

COPYRIGHT © 2009 WINNEBAGO INDUSTRIES INC.

EXTERIOR DOORS & COMPARTMENTS GROUP (CONTINUED)

DOORS & COMPARTMENTS LAYOUT (CONTINUED)

KEY	PART NUMBER	U/M	DESCRIPTION
11	P32206-09-Y01	EA	DOOR - ENTRY W/SCREEN DOOR - W/O WINDOW/LATCH (Y01, Y02)
11	P32206-09-Y03	EA	DOOR - ENTRY W/SCREEN DOOR - W/O WINDOW/LATCH (Y03)
ENTRY DOOR LOCK CYLINDERS & KEYS			
	138287-11-000	EA	CYLINDER/LOCK - ENTRY DOOR - MASTER W/3M ICON - (3041)
	138287-12-000	EA	CYLINDER/LOCK - ENTRY DOOR - MASTER W/3M ICON - (3042)
	138287-13-000	EA	CYLINDER/LOCK - ENTRY DOOR - MASTER W/3M ICON - (3043)
	138287-14-000	EA	CYLINDER/LOCK - ENTRY DOOR - MASTER W/3M ICON - (3044)
	138287-15-000	EA	CYLINDER/LOCK - ENTRY DOOR - MASTER W/3M ICON - (3045)
	138287-16-000	EA	CYLINDER/LOCK - ENTRY DOOR - MASTER W/3M ICON - (3046)
	138287-17-000	EA	CYLINDER/LOCK - ENTRY DOOR - MASTER W/3M ICON - (3047)
	138287-18-000	EA	CYLINDER/LOCK - ENTRY DOOR - MASTER W/3M ICON - (3048)
	138287-19-000	EA	CYLINDER/LOCK - ENTRY DOOR - MASTER W/3M ICON - (3049)
	138287-20-000	EA	CYLINDER/LOCK - ENTRY DOOR - MASTER W/3M ICON - (3050)
	138288-11-000	EA	KEY - REVERSIBLE - #3041 - T/M 16169-02-3041
	138288-12-000	EA	KEY - REVERSIBLE - #3042 - T/M 16169-02-3042
	138288-13-000	EA	KEY - REVERSIBLE - #3043 - T/M 16169-02-3043
	138288-14-000	EA	KEY - REVERSIBLE - #3044 - T/M 16169-02-3044
	138288-15-000	EA	KEY - REVERSIBLE - #3045 - T/M 16169-02-3045
	138288-16-000	EA	KEY - REVERSIBLE - #3046 - T/M 16169-02-3046
	138288-17-000	EA	KEY - REVERSIBLE - #3047 - T/M 16169-02-3047
	138288-18-000	EA	KEY - REVERSIBLE - #3048 - T/M 16169-02-3048
	138288-19-000	EA	KEY - REVERSIBLE - #3049 - T/M 16169-02-3049
	138288-20-000	EA	KEY - REVERSIBLE - #3050 - T/M 16169-02-3050
	138292-01-000	EA	SEAL - LOCK CYLINDER
VALANCE DOORS & WATER FILL DOOR KEYS			
	138637-51-000	EA	KEYS - SET OF TWO
	138637-51-001	EA	KEYS - SET OF TWO
	138637-51-002	EA	KEYS - SET OF TWO
	138637-51-003	EA	KEYS - SET OF TWO
	138637-51-004	EA	KEYS - SET OF TWO
	138637-51-005	EA	KEYS - SET OF TWO
	138637-51-006	EA	KEYS - SET OF TWO
	138637-51-007	EA	KEYS - SET OF TWO
	138637-51-008	EA	KEYS - SET OF TWO
	138637-51-009	EA	KEYS - SET OF TWO
12	139100-02-01A	EA	GARNISH/RADIUS - ENTRY DOOR - BRIGHT WHITE
13	139101-02-01A	EA	GARNISH/STRAIGHT - 24.9" - BRIGHT WHITE
14	157782-04-U01	EA	COMPARTMENT - LUGGAGE
	159400-01-01A	EA	COMPARTMENT/LUGGAGE
15	157782-05-U01	EA	COMPARTMENT - LUGGAGE
	160153-01-01A	EA	COMPARTMENT - LUGGAGE
16	157782-06-U01	EA	COMPARTMENT - LUGGAGE
	158098-01-01A	EA	COMPARTMENT - STORAGE - PLASTIC
17	158188-01-02B	EA	COMPARTMENT - POWER CORD - E-COATED
18	142894-01-01A	EA	DOOR/POWER CORD - W/HATCH - W/LOCK - BRIGHT WHITE
19	102768-01-000	EA	HOLDER - COMPARTMENT/ENTRY DOOR - METAL - MILL FINISH
20	153498-01-01A	EA	BUMPER - RUBBER - WHITE
20	153498-01-02A	EA	BUMPER - RUBBER - BLACK
21	111848-06-02B	EA	SHIELD - HEAT - EXHAUST - E-COATED
22	117046-02-000	EA	BUMPER - RUBBER/ROUND END - 1.5"

***COMPONENT PARTS LISTED LATER IN THIS GROUP**

COPYRIGHT © 2009 WINNEBAGO INDUSTRIES INC.

EXTERIOR DOORS & COMPARTMENTS GROUP (CONTINUED)

DOORS & COMPARTMENTS LAYOUT (CONTINUED)

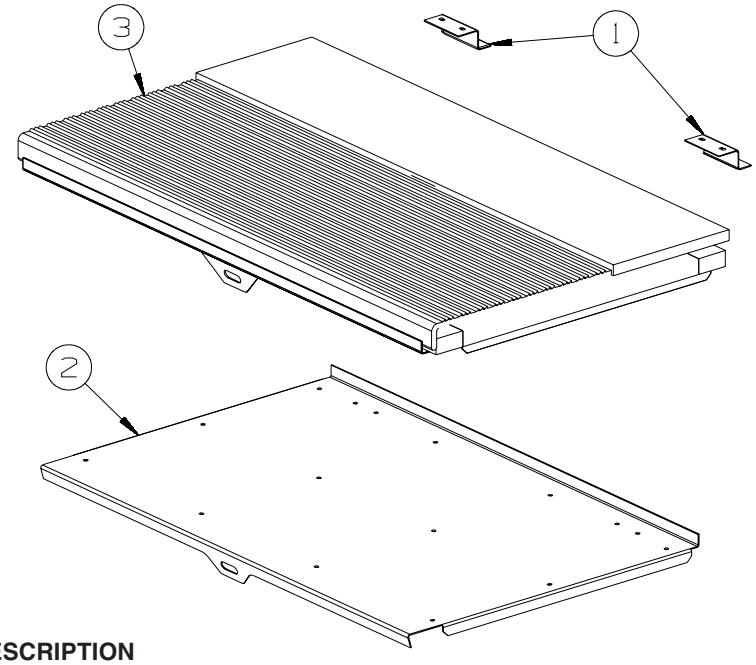

ENTRY STEP LID

KEY	PART NUMBER	U/M	DESCRIPTION
1	146747-01-02B	EA	BRACKET/CATCH - E-COATED
2	123330-05-02B	EA	SUPPORT - ENTRY STEP - E-COATED
3	147781-01-01A	EA	TREAD/STEP - RUBBER - TAUPE

COPYRIGHT © 2009 WINNEBAGO INDUSTRIES INC.

EXTERIOR DOORS & COMPARTMENTS GROUP (CONTINUED)

COMPONENT PARTS FOR DOORS & COMPARTMENTS LAYOUT

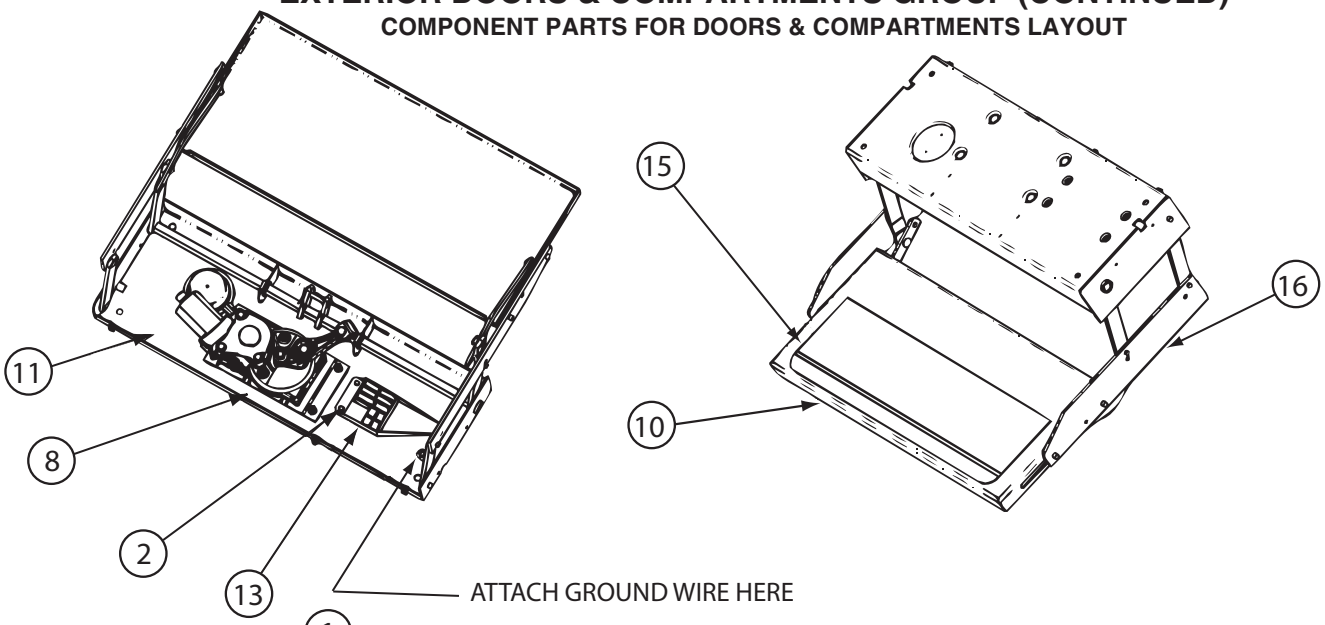

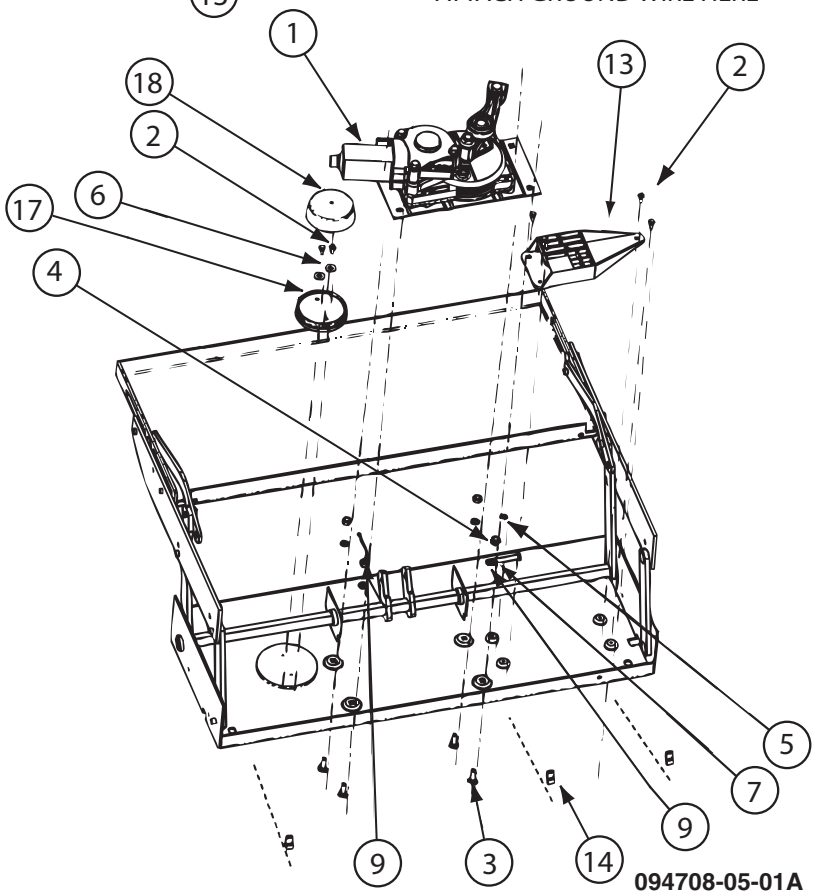

094708-05-01A

KEY	PART NUMBER	U/M	DESCRIPTION	VENDOR NO.
1	094707-04-701	EA	MOTOR “AM 214” F/IMGL STEPS	1101428
13	094707-04-700	EA	CONTROL UNIT W/OVERRIDE	909510000
15	143709-01-702	EA	TREAD/NON-SKID 6" X 21" BLK	1915260
16	094708-05-701	EA	FRAME W/SGL STEP,28 SERIES	908028000
17	088746-01-705	EA	LIGHT-UNDER STEP	9004
	094707-03-701	EA	PLUG - 4-WAY - PACKARD	909306
	094707-04-702	EA	COTTER PIN - W/CLEVIS PIN	905205000
	094707-04-711	EA	KWIKTEST - W/4-WAY PIGTAIL	909518000
	094708-05-700	EA	GEAR BOX W/LINKAGE-STRAIGHT	1101426
			CONTACT WINNEBAGO PART SALES FOR UNLISTED COMPONENT(S)	

172626-01-01A

KEY	PART NUMBER	U/M	DESCRIPTION	VENDOR NO.
	084104-01-700	EA	LOCK-MALE, FASTENER	201-721-010
	084104-01-701	EA	LOCK-FEMALE, FASTENER	201-802-010

COPYRIGHT © 2009 WINNEBAGO INDUSTRIES INC.

EXTERIOR DOORS & COMPARTMENTS GROUP (CONTINUED)

COMPARTMENT DOOR PIECE PARTS

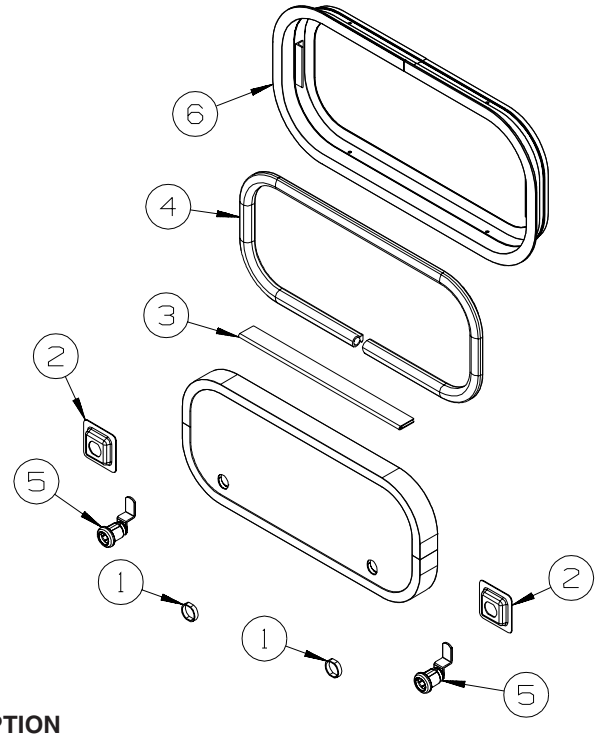

126945/126946
STORAGE DOOR

KEY	PART NUMBER	U/M	DESCRIPTION
1	144734-01-000	EA	SPACER - COMPARTMENT DOOR LOCK - 9/16" DEEP
1	139325-01-000	EA	SPACER - LOCK - 6MM - TRI/MARK KEY ONE
	139337-01-000	EA	GASKET - LOCK - TRI/MARK KEY ONE
2	097111-02-05A	EA	POCKET - LOCK - REAR DOOR - BRIGHT WHITE - TRI/MARK KEY ONE
2	097111-02-04A	EA	POCKET - LOCK - REAR DOOR - BLACK - TRI/MARK KEY ONE
3	081801-V3-000	EA	HINGE - DOOR - PIANO - 2" X 96" - BRIGHT WHITE
3	081801-FN-000	EA	HINGE - DOOR - PIANO - 2" X 96" - BLACK
4	156386-01-01A	FT	SEAL - BULB - .4" X .5" - W/ADHESIVE BACK
4	112160-02-000	FT	SEAL - D SECTION - .2 X .3" - FOAM RUBBER - NOT ILLUSTRATED
5	110506-40-000	EA	CLIP-E, LOCK ASM - BRIGGS & STRATTON 93981
5	110506-41-000	EA	WASHER-TENSION LOCK ASM - BRIGGS & STRATTON 37512
5	110506-42-000	EA	NUT-LOCK ASM - BRIGGS & STRATTON 310878
5	110506-43-000	EA	WASHER-FLAT, LOCK ASM - BRIGGS & STRATTON 82089
5	110506-44-000	EA	GASKET-LOCK ASM - BRIGGS & STRATTON - #47701
5	110506-55-000	EA	CASE/CYLINDER - TWIST LOCK - W/O CAM - 1.25" - 597312AA1 - TWIST LOCK
5	110506-66-000	EA	CAM - LATCHING - DOG LEG - 1.5" LONG - TWIST LOCK
5	138290-02-000	EA	CASE - W/CAM - W/O CYLINDER/KEY - TRI/MARK KEY ONE
	144474-01-000	EA	ADAPTER - LOCK - 180 DEGREE - KEYED LOCK
	138637-65-000	EA	CAM - LATCHING - DOG LEG - 1 1/2" LONG - KEYED LOCK
	138637-53-000	EA	CASE/CYLINDER - LOCKING - W/O CAM/KEY - 1.5" - KEYED LOCK
	138637-53-001	EA	CASE/CYLINDER - LOCKING - W/O CAM/KEY - 1.5" - KEYED LOCK
	138637-53-002	EA	CASE/CYLINDER - LOCKING - W/O CAM/KEY - 1.5" - KEYED LOCK
	138637-53-003	EA	CASE/CYLINDER - LOCKING - W/O CAM/KEY - 1.5" - KEYED LOCK
	138637-53-004	EA	CASE/CYLINDER - LOCKING - W/O CAM/KEY - 1.5" - KEYED LOCK
	138637-53-005	EA	CASE/CYLINDER - LOCKING - W/O CAM/KEY - 1.5" - KEYED LOCK
	138637-53-006	EA	CASE/CYLINDER - LOCKING - W/O CAM/KEY - 1.5" - KEYED LOCK
	138637-53-007	EA	CASE/CYLINDER - LOCKING - W/O CAM/KEY - 1.5" - KEYED LOCK
	138637-53-008	EA	CASE/CYLINDER - LOCKING - W/O CAM/KEY - 1.5" - KEYED LOCK
	138637-53-009	EA	CASE/CYLINDER - LOCKING - W/O CAM/KEY - 1.5" - KEYED LOCK
6	056795-01-000	FT	TAPE/SEAL - 1/8" X 3/8" WIDE - PRESS ON

COPYRIGHT © 2009 WINNEBAGO INDUSTRIES INC.

EXTERIOR DOORS & COMPARTMENTS GROUP (CONTINUED)

ENTRY

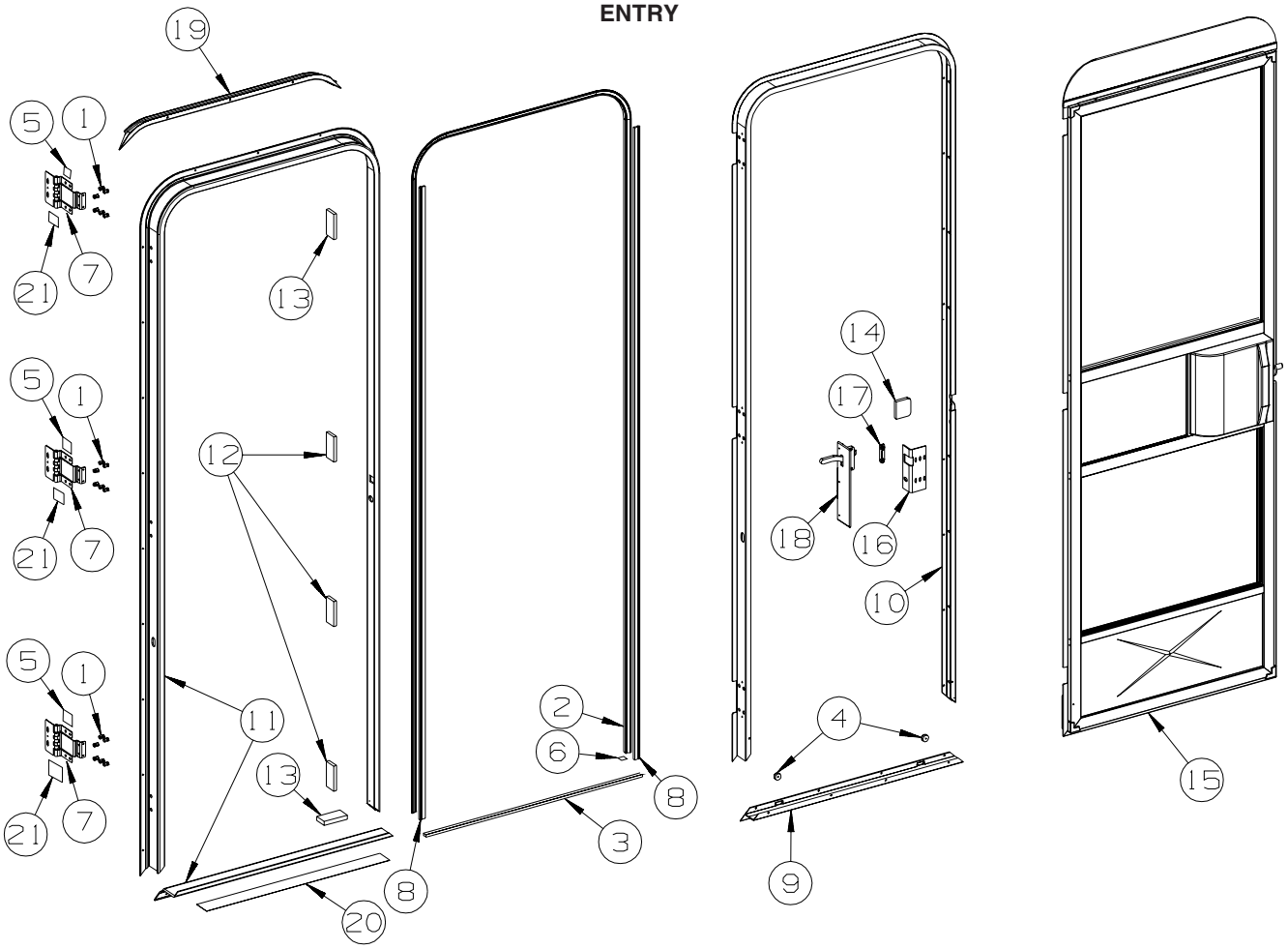

KEY	PART NUMBER	U/M	DESCRIPTION
1	039715-01-000	EA	NUT-SERT - 1/4" DIAMETER - 20 THREADS
2	075671-04-000	FT	SEAL - SPONGE - LAZY T - W/ADHESIVE STRIP - .5" WIDE
3	075673-05-000	FT	SEAL/PILE - .5" HIGH W/ADHESIVE BACK - BLACK
4	081914-02-000	EA	BUMPER - RUBBER - ROUND - 5/16" DIA. X 13/64" THICK
5	100128-02-000	FT	SEAL - FOAM/ADHESIVE BACK - .37" WIDE X .37" THICK X 60'
6	104692-01-000	FT	SEAL - ADHESIVE BACKED FOAM - 3/4" THICK X 3/4" WIDE X 25'
7	106719-01-05A	EA	HINGE - ENTRY DOOR - BRIGHT WHITE
7	106719-01-08A	EA	HINGE - ENTRY DOOR - BLACK
	154777-02-000	EA	SCREW-MACH-1/4-20X3/8,TRX TH
8	118929-01-01A	FT	SEAL - PILE - PUSH ON
9	121893-01-01A	EA	FRAME - ENTRY DOOR/BOTTOM - BRIGHT WHITE
9	121893-01-04A	EA	FRAME - ENTRY DOOR/BOTTOM - BLACK
10	121894-28-01A	EA	FRAME - ENTRY DOOR - BRIGHT WHITE
10	121894-28-02A	EA	FRAME - ENTRY DOOR - BLACK
11	121898-16-01A	EA	JAMB - DOOR/ENTRANCE - BRIGHT WHITE
11	121898-16-02A	EA	JAMB - DOOR/ENTRANCE - BLACK
12	125724-01-000	EA	SHIM - DOOR, ENTRANCE
13	125724-02-000	EA	SHIM - DOOR, ENTRANCE
14	130096-05-000	EA	FOAM - SCREEN DOOR, RETAINER
15	P32208-04-L07	EA	DOOR - SCREEN - W/O STRIKE/SLIDER/HDW - BRIGHT WHITE
15	P32208-04-AA1	EA	DOOR - SCREEN - W/O STRIKE/SLIDER/HDW - BLACK
16	137401-01-03B	EA	BRACKET - DOOR ANGLE - OFF WHITE
17	148364-01-12B	EA	STRIKE - SCREEN DOOR - BRIGHT WHITE
17	148364-01-04B	EA	STRIKE - SCREEN DOOR - BLACK
18	132915-01-01A	EA	LATCH - SCREEN DOOR - BLACK
19	139054-01-01A	EA	CAP - DRIP - JAMB MOUNTED - BRIGHT WHITE
19	139054-01-02A	EA	CAP - DRIP - JAMB MOUNTED - BLACK
20	038327-01-000	EA	TAPE - ANTI-SLIP - 2" X 60'
21	154585-01-01A	FT	SEAL - FOAM TAPE - ADHESIVE BACK - 3/8" X 3/8" - BLACK

COPYRIGHT © 2009 WINNEBAGO INDUSTRIES INC.

EXTERIOR DOORS & COMPARTMENTS GROUP (CONTINUED)

SCREEN

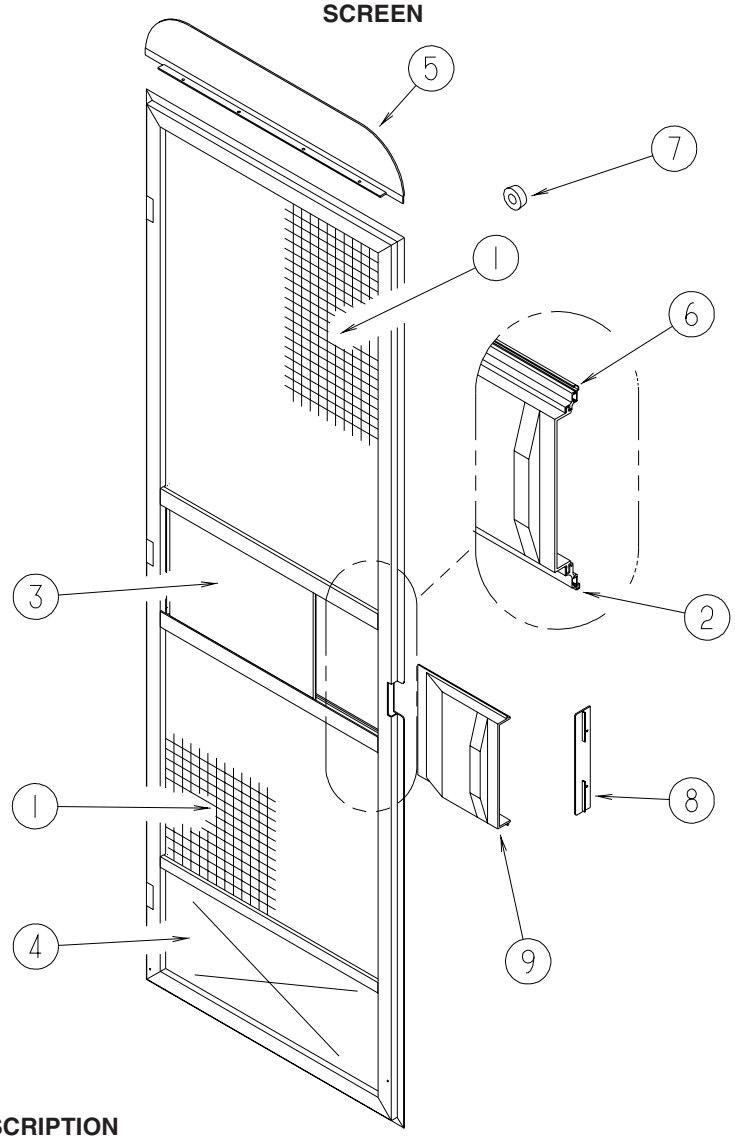

KEY	PART NUMBER	U/M	DESCRIPTION
1	002293-02-000	SF	SCREEN - 26" - CHARCOAL
2	002294-01-000	FT	SPLINE - SCREENING - .13" X .14"
3	016454-21-000	EA	INSERT/CENTER - SCREEN DOOR
4	078552-03-000	EA	KICK PANEL - SCREEN DOOR - LOWER INSERT - UNPAINTED
5	078595-01-000	EA	TOP PLATE - SCREEN DOOR - CURVED TOP - 4.7" X 25.35"
6	078777-08-000	FT	CHANNEL - SLIDER - 4 FOOT INCREMENTS
7	120863-09-000	EA	BUMPER - RUBBER/RADIUS TOP - 3/4" X 3/8" - LT GRAY
8	132081-01-01A	EA	STRIKE - SLIDER - SCREEN DOOR - BRIGHT WHITE
8	132081-01-03A	EA	STRIKE - SLIDER - SCREEN DOOR - BLACK
9	132082-01-01A	EA	SLIDER - SCREEN DOOR - BRIGHT WHITE
9	132082-01-03A	EA	SLIDER - SCREEN DOOR - BLACK

COPYRIGHT © 2009 WINNEBAGO INDUSTRIES INC.

EXTERIOR DOORS & COMPARTMENTS GROUP (CONTINUED)

LATCH - ENTRY

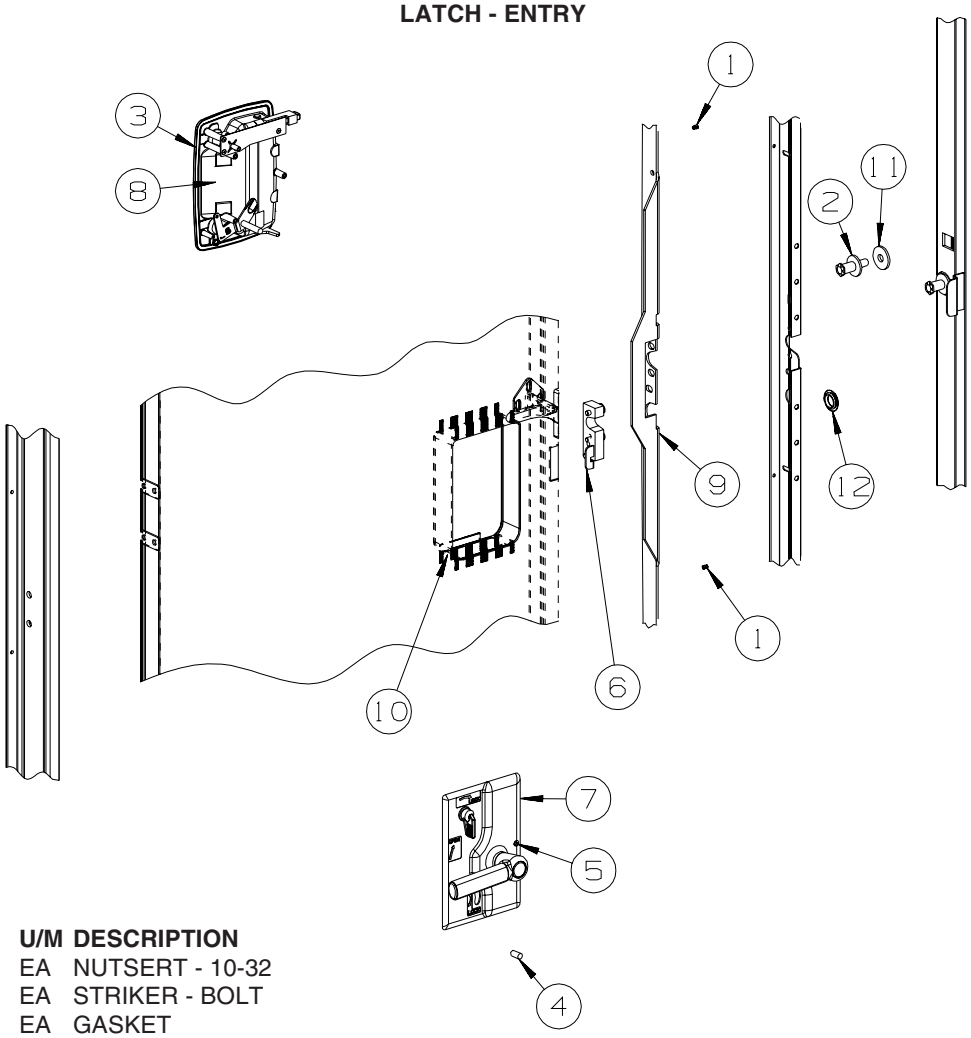

KEY	PART NUMBER	U/M	DESCRIPTION
1	072893-04-000	EA	NUTSERT - 10-32
2	092927-20-000	EA	STRIKER - BOLT
3	112782-04-01A	EA	GASKET
4	112782-05-01A	EA	CAP - VINYL - RED
5	112782-08-01A	EA	SCREW - MOUNTING/PLATE - ZINC
6	112782-22-01A	EA	LATCH - SINGLE ROTOR
7	112782-27-01A	EA	LATCH - INTERIOR PLATE - WHITE
8	112782-20-01A	EA	LATCH - EXTERIOR - W/O LOCK CYLINDER W/ICON-REVERSIBLE KEY
9	132207-01-02B	EA	STIFFENER/DOOR - FORMED - E-COATED
10	137230-01-01A	EA	SPACER - NOTCHED, MILL
11	147900-01-01A	EA	SPACER - STRIKE BOLT, MILL
12	061420-14-000	EA	PLUG/PLASTIC - 7/8” DIAMETER - BLACK

COPYRIGHT © 2009 WINNEBAGO INDUSTRIES INC.

GENERATOR GROUP

GAS

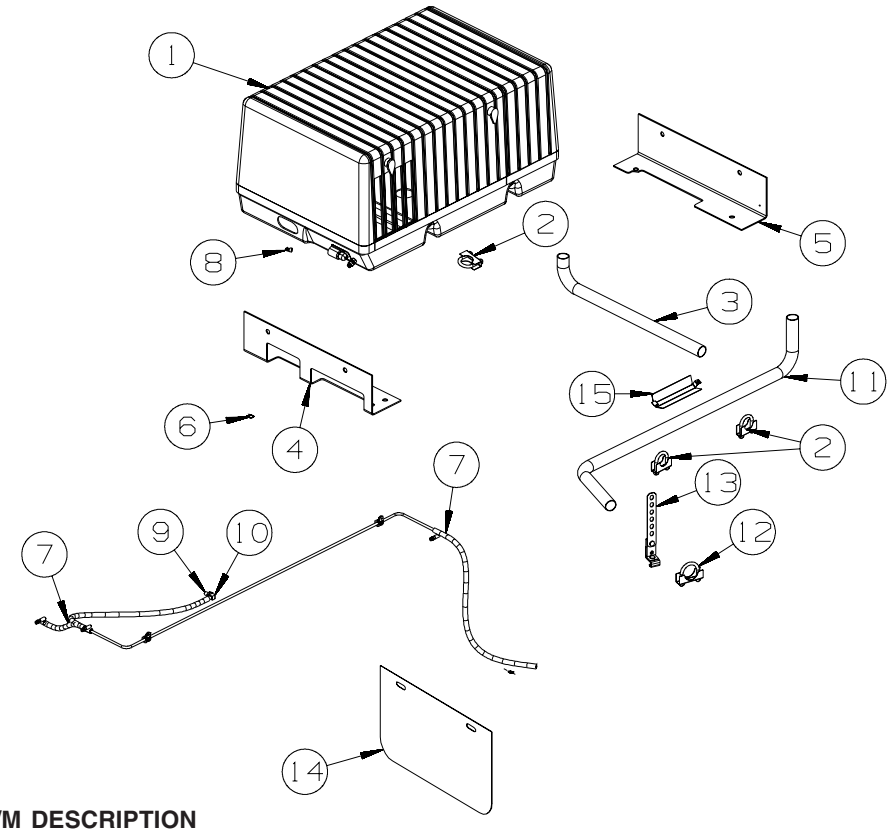

KEY	PART NUMBER	U/M	DESCRIPTION
1	109982-03-000	EA	GENERATOR - 4.0 MICROLITE - ONAN
2	007125-04-000	EA	CLAMP - MUFFLER - 1.12"DIAMETER
3	NOT USED		
4	114070-02-02B	EA	SUPPORT - GENERATOR - LEFT
5	114071-02-02B	EA	SUPPORT - GENERATOR - RIGHT
6	113452-01-000	FT	SEAL/TRIM - FRONT - VINYL W/WIRE CARRIER - .020
7	128139-03-000	FT	HOSE - FUEL - LOW PERMEABILITY - 1/4" DIAMETER
8	084884-01-000	EA	PLUG - BRASS - 3/8"
9	068382-06-000	EA	BUSHING - 3/8"MPT X 1/8"FPT - BRASS - 1PY
10	114253-01-000	EA	ELBOW - 1/4 SINGLE BARB X 1/8 MPT - 1PY
11	143954-02-000	EA	PIPE/EXHAUST - GENERATOR
12	007125-03-000	EA	CLAMP - MUFFLER - 1.5"DIAMETER
13	007131-01-000	EA	HANGER - TAILPIPE - 6 SLOTS
14	149346-04-02B	EA	SHIELD - HEAT EXHAUST - E-COATED
15	NOT USED		

COPYRIGHT © 2009 WINNEBAGO INDUSTRIES INC.

HEATING & A/C GROUP

FURNACE

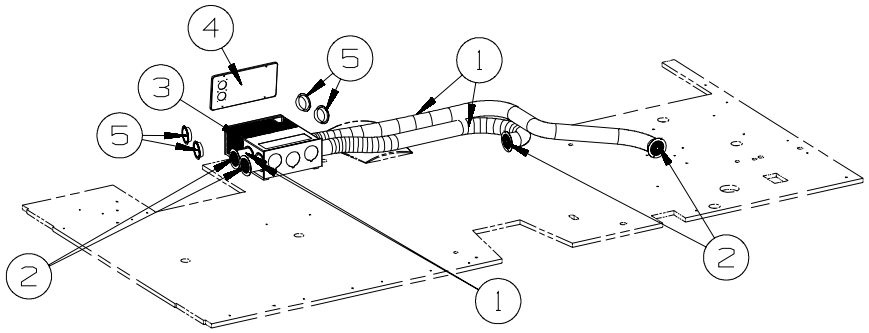

KEY	PART NUMBER	U/M	DESCRIPTION
1	009198-01-000	FT	DUCT - HEAT - FLEXIBLE - 4" ID X 25'
2	173191-02-02A	EA	REGISTER W/O DAMPER - 4" DIAMETER - PLASTIC - BEIGE
3*	139980-01-000	EA	FURNACE - 25000 BTU - SF QUIET - SUBURBAN SF-25 2320J
4	139980-10-02A	EA	DOOR - ACCESS/FURNACE - BRIGHT WHITE
5	069636-02-000	EA	CONNECTOR - DUCT - 4" ID

***COMPONENT PARTS LISTED LATER IN THIS GROUP**

COPYRIGHT © 2009 WINNEBAGO INDUSTRIES INC.

HEATING & A/C GROUP (CONTINUED)

COMPONENT PARTS FOR FURNACE

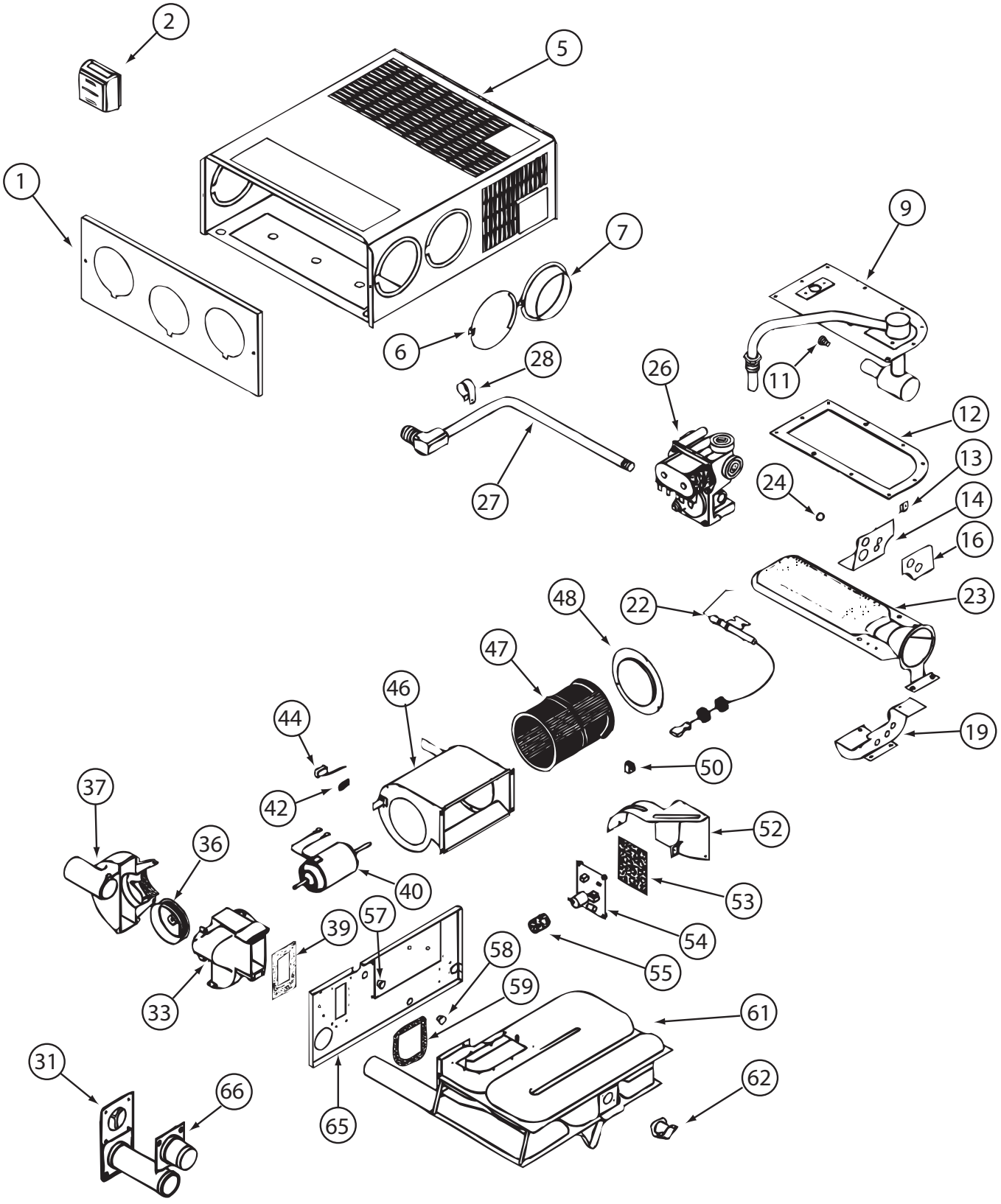

139980-01-000

COPYRIGHT © 2009 WINNEBAGO INDUSTRIES INC.

HEATING & A/C GROUP (CONTINUED)

COMPONENT PARTS FOR FURNACE (CONTINUED)

139980-01-000 (CONTINUED)

KEY	PART NUMBER	U/M	DESCRIPTION	VENDOR NO.
9	139980-01-700	EA	MANIFOLD ASSEMBLY	171571
11	090039-01-703	EA	ORIFICE-MAIN BURNER	180193
12	098668-22-703	EA	GASKET - BURNER ACCESS COVER	070811
22	139980-01-701	EA	ELECTRODE	232286
23	098668-01-703	EA	BURNER ASSEMBLY	010762
26	098668-01-718	EA	VALVE-GAS SF S.N.974903079	161122
27	139980-01-702	EA	PIPE ASSEMBLY/GAS INLET	171574
31	098668-01-707	EA	TUBE ASSEMBLY, EXHAUST W/CAP	260231
33	139980-01-703	EA	HOUSING/COMB. - FRONT/HALF	390852
36	098668-01-706	EA	WHEEL-COMBUSTION AIR	350184
37	139980-01-704	EA	HOUSING/COMB. - REAR/HALF	390848
39	139980-01-705	EA	GASKET/FIREWALL-COMB AIR	071084
40	139980-01-706	EA	MOTOR ASSEMBLY W/GASKET	232682
42	101990-01-714	EA	GASKET-MICROSWITCH	230877
44	098668-21-700	EA	SWITCH-MICRO-W/O FLAG 3 1/4"	232261
46	139980-01-708	EA	BLOWER ASSEMBLY - ROOM AIR	390739BK
47	098668-01-711	EA	WHEEL-BLOWER, ROOM AIR	350129
48	139980-01-709	EA	ORFICE RING	390696
50	139980-01-710	EA	SWITCH - ON/OFF	232351
52	139980-01-711	EA	PANEL ASSEMBLY-MODULE BD	101663
53	139980-01-712	EA	INSULATOR - MODULE BD	070807
54	098668-22-705	EA	MODULE BD W/RELAY TIME DELAY	520820
55	139980-01-713	EA	CAP/INSULATOR-MODULE BD	070973
57	139980-01-714	EA	BUSHING - UNIVERSAL	070362
58	139980-01-715	EA	BUSHING - STRAIN RELIEF	231809
59	098668-01-716	EA	GASKET-FIREWALL,CHAMBER SIDE	070808
61	139980-01-716	EA	CHAMBER ASSEMBLY - FINAL	021149BK
62	098668-21-701	EA	SWITCH - LIMIT	232504
66	098668-01-713	EA	TUBE ASSEMBLY, INTAKE	051248
	098668-19-700	EA	DOOR/CABINET ACCESS	101888
	139980-02-700	EA	BLOWER ASM-1/2 HOUSING/OUTER	390851
	139980-02-701	EA	BLOWER ASM-1/2 HOUSING/INNER	390872
			CONTACT WINNEBAGO PART SALES FOR UNLISTED COMPONENT(S)	

COPYRIGHT © 2009 WINNEBAGO INDUSTRIES INC.

HEATING & A/C GROUP (CONTINUED)

ROOF

KEY	PART NUMBER	U/M	DESCRIPTION
*	131185-04-01A	EA	A/C ROOF - 13,500 BTU - MACH 3 - 2 PIECE SHROUD STYLE
*	156860-02-01A	EA	CEILING ASSEMBLY - A/C DUCTED - W/CONTROLS - WHITE

***COMPONENT PARTS LISTED LATER IN THIS GROUP**

COMPONENT PARTS FOR ROOF

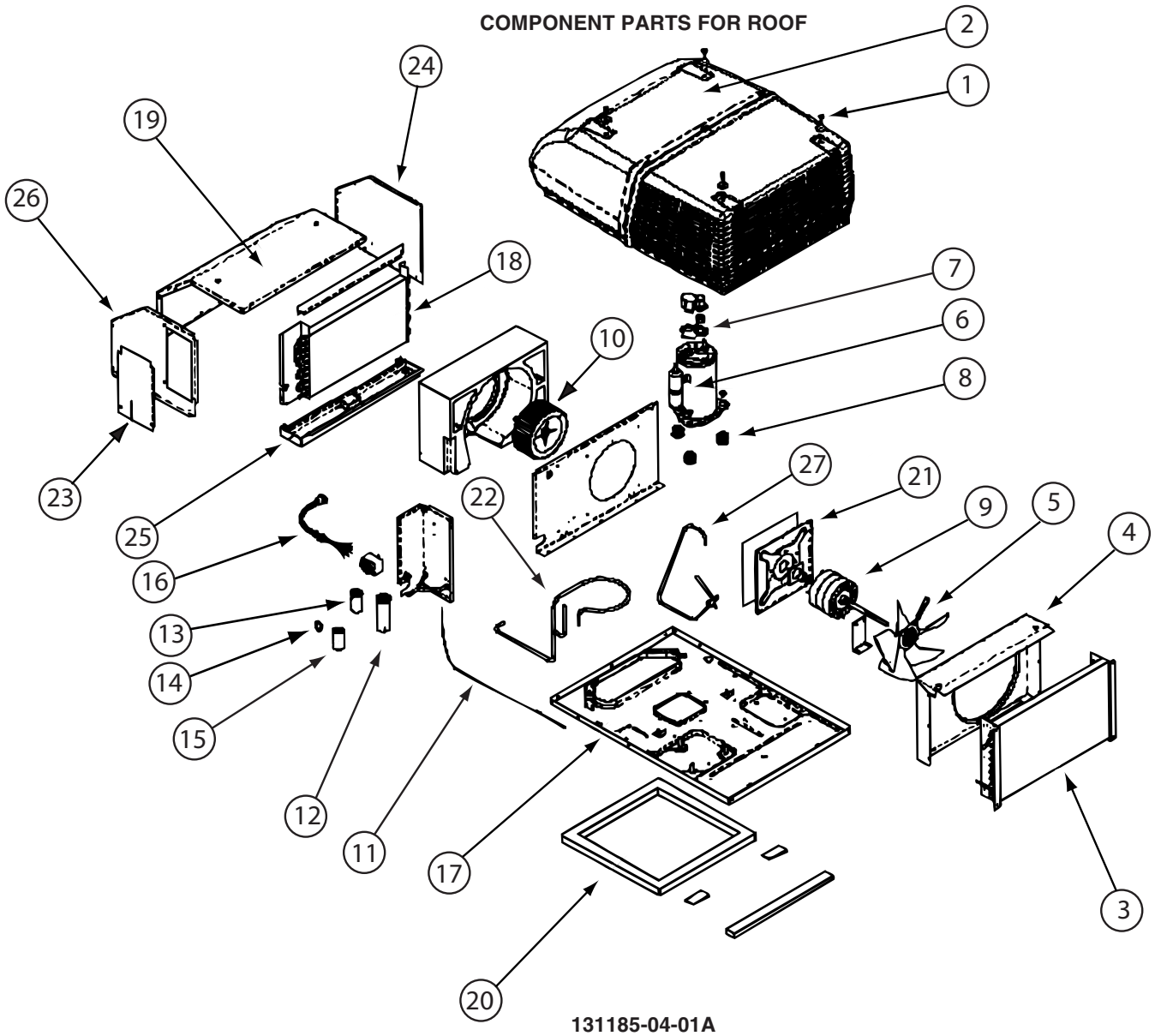

131185-04-01A

KEY	PART NUMBER	U/M	DESCRIPTION	VENDOR NO.
2	131188-05-700	EA	SHROUD-ROOF AIR/2 PIECE-WHT	8335-5261
3	131185-04-700	EA	CONDENSER COIL	1452B1451
4	131187-03-700	EA	SHROUD FAN/INNER-LESS LOGO	6792-1071
5	093763-01-712	EA	BLADE-FAN-CONDENSER	6733-3221
6	131185-04-701	EA	COMPRESSOR (TECUMSEH)	1450B2259
7	105620-01-705	EA	PROTECTOR-OVERLOAD, RH & LH	6759-3791
8	105620-01-706	EA	MOUNTING PKG.,COMP., 3 PER	6759-3081
9	131185-01-701	EA	MOTOR (115V, 60HZ)	1468-3069
10	131185-01-702	EA	BLOWER WHEEL PACKAGE	1472-1091
12	105620-12-725	EA	COMPRESSOR RUN CAPACITOR	1499-5731
13	093763-01-704	EA	CAPACITOR-FAN (ID/OD MOTOR)	1499-5461
15	105620-10-705	EA	PTCR (START DEVICE) - W/CAP.	8333A9021
18	131185-01-703	EA	EVAPORATOR COIL	1452A1491
20	037648-01-714	EA	GASKET PACKAGE	8332-3301
21	131185-01-704	EA	MOTOR MOUNT & SEAL KIT	8333-5151
	131188-05-702	EA	SHROUD BRACKET	8333B1551

CONTACT WINNEBAGO PART SALES FOR UNLISTED COMPONENT(S)

COPYRIGHT © 2009 WINNEBAGO INDUSTRIES INC.

HEATING & A/C GROUP (CONTINUED)

COMPONENT PARTS FOR ROOF (CONTINUED)

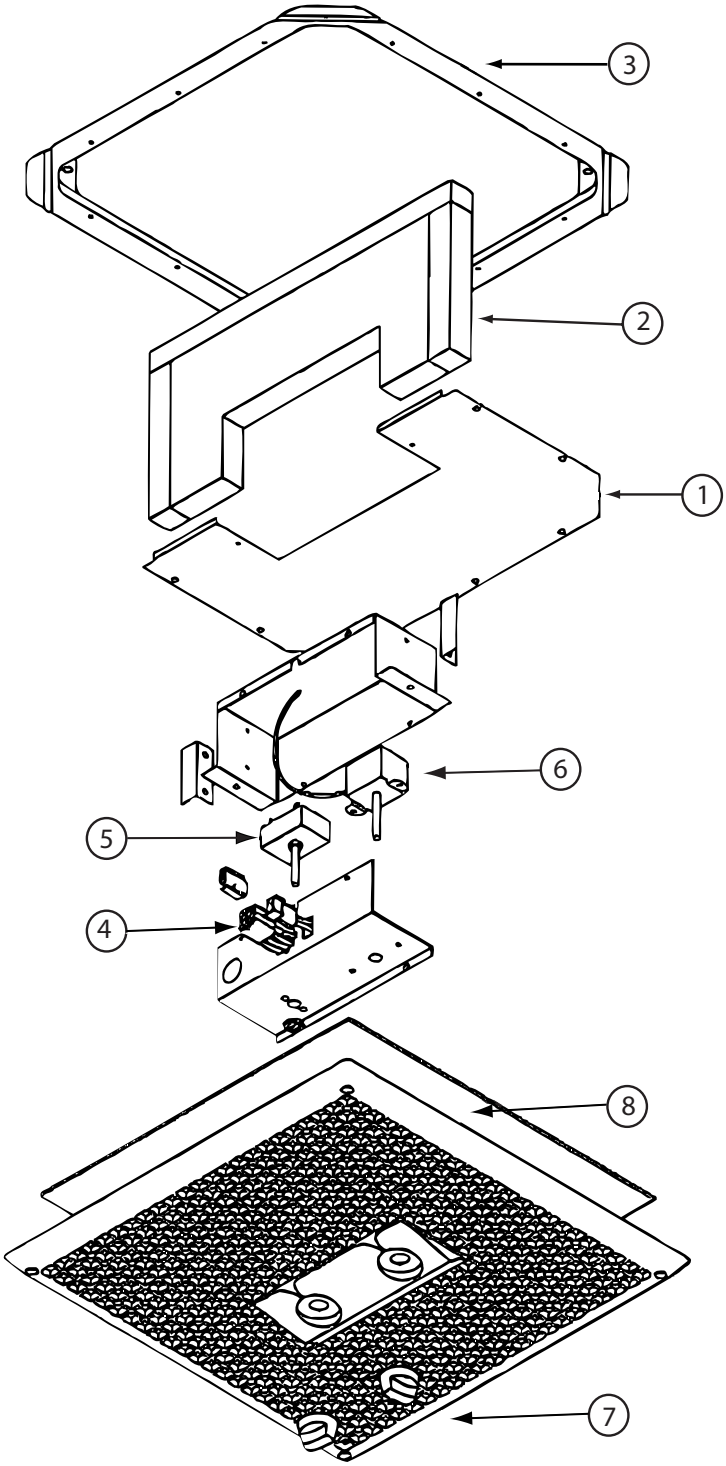

156860-02-01A

KEY	PART NUMBER	U/M	DESCRIPTION	VENDOR NO.
4	156860-01-702	EA	PLUG ASSEMBLY	7330-347
5	073742-01-701	EA	SWITCH - SELECTOR/5 TERMINAL	6759-3251
6	093307-04-701	EA	THERMOSTAT(90‘ IN-60‘ OUT)	6703-3401
7	156860-01-700	EA	GRILLE ASSEMBLY - WHITE	8330-4081
8	108892-01-703	EA	FILTER	6798A3761
	131183-04-700	EA	KNOB-THERMOSTAT/HEAT-COOL	7330A3131
	156860-02-701	EA	KNOB-SELECTOR SWITCH	7330A3141
	156860-02-700	EA	SMALL PARTS PKG-BOLTS/KNOBS	8330-584
			CONTACT WINNEBAGO PART SALES FOR UNLISTED COMPONENT(S)	

COPYRIGHT © 2009 WINNEBAGO INDUSTRIES INC.

INTERIOR FINISH GROUP

MOLDINGS & TRIMS
SIERRA MAPLE

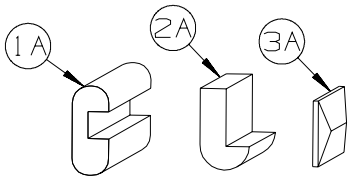

KEY	PART NUMBER	U/M	DESCRIPTION
1A	M09412-62-M52	EA	MOLDING/SHELF EDGE - .6" X 1.3" X 96" - CONCERT CHERRY
1A	M09412-62-M62	EA	MOLDING/SHELF EDGE - .6" X 1.3" X 96" - WASHED MAPLE
1A	M09412-62-RC3	EA	MOLDING/SHELF EDGE - .6" X 1.3" X 96" - HONEY CHERRY
1A	M09412-62-SA3	EA	MOLDING/SHELF EDGE - .6" X 1.3" X 96" - SIERRA MAPLE
1A	M09412-62-Y93	EA	MOLDING/SHELF EDGE - .6" X 1.3" X 96" - BELMOND MAPLE
2A	M09525-80-UM1	EA	MOLDING - TRIM - W/NOTCH - .8" X 1.4" X 86.5" - CONCERT CHERRY
2A	M09525-80-U91	EA	MOLDING - TRIM - W/NOTCH - .8" X 1.4" X 86.5" - WASHED MAPLE
2A	M09525-80-U92	EA	MOLDING - TRIM - W/NOTCH - .8" X 1.4" X 86.5" - SIERRA MAPLE
2A	M09525-80-Y92	EA	MOLDING - TRIM - W/NOTCH - .8" X 1.4" X 86.5" - HONEY CHERRY
2A	M09525-80-Y93	EA	MOLDING - TRIM - W/NOTCH - .8" X 1.4" X 86.5" - BELMONT MAPLE
2A	M09511-44-T78	EA	MOLDING - TRIM - W/NOTCH - 1" X 86.4" - CONCERT CHERRY
2A	M09511-44-T79	EA	MOLDING - TRIM - W/NOTCH - 1" X 86.4" - WASHED MAPLE
2A	M09511-44-T80	EA	MOLDING - TRIM - W/NOTCH - 1" X 86.4" - HONEY CHERRY
2A	M09577-47-YA0	EA	MOLDING - TRIM - W/NOTCH - 1" X 86.4" - CONCERT CHERRY
2A	M09577-47-YA1	EA	MOLDING - TRIM - W/NOTCH - 1" X 86.4" - HONEY CHERRY
2A	M09577-47-YA2	EA	MOLDING - TRIM - W/NOTCH - 1" X 86.4" - BELMONT MAPLE
2A	M09515-72-TD1	EA	MOLDING/TRIM - .8" X 2.2" X 86.1" - CONCERT CHERRY
2A	M09515-72-TD2	EA	MOLDING/TRIM - .8" X 2.2" X 86.1" - WASHED MAPLE
2A	M09515-72-TD3	EA	MOLDING/TRIM - .8" X 2.2" X 86.1" - SIERRA MAPLE
2A	M09553-87-YP2	EA	MOLDING/TRIM - .8" X 2.2" X 86.14" - BELMONT MAPLE
3A	M09568-37-YK0	EA	MOLDING - TRIM/VEE - .2" X 1" X 80.2" - CONCERT CHERRY
3A	M09568-37-YK1	EA	MOLDING - TRIM/VEE - .2" X 1" X 80.2" - HONEY CHERRY
3A	M09568-37-YK2	EA	MOLDING - TRIM/VEE - .2" X 1" X 80.2" - BELMONT MAPLE
3A	M09568-37-YK3	EA	MOLDING - TRIM/VEE - .2" X 1" X 80.2" - WASHED MAPLE
3A	M09568-40-YK0	EA	MOLDING - TRIM/VEE - .2" X 1" X 76.3" - CONCERT CHERRY
3A	M09568-40-YK1	EA	MOLDING - TRIM/VEE - .2" X 1" X 76.3" - HONEY CHERRY
3A	M09568-40-YK2	EA	MOLDING - TRIM/VEE - .2" X 1" X 76.3" - BELMONT MAPLE
3A	M09568-40-YK3	EA	MOLDING - TRIM/VEE - .2" X 1" X 76.3" - WASHED MAPLE
3A	M09568-41-YK0	EA	MOLDING - TRIM/VEE - .2" X 1" X 73.9" - CONCERT CHERRY
3A	M09568-41-YK1	EA	MOLDING - TRIM/VEE - .2" X 1" X 73.9" - HONEY CHERRY
3A	M09568-41-YK2	EA	MOLDING - TRIM/VEE - .2" X 1" X 73.9" - BELMONT MAPLE
3A	M09568-41-YK3	EA	MOLDING - TRIM/VEE - .2" X 1" X 73.9" - WASHED MAPLE
3A	M09568-42-YK0	EA	MOLDING - TRIM/VEE - .2" X 1" X 40.1" - CONCERT CHERRY
3A	M09568-42-YK1	EA	MOLDING - TRIM/VEE - .2" X 1" X 40.1" - HONEY CHERRY
3A	M09568-42-YK2	EA	MOLDING - TRIM/VEE - .2" X 1" X 40.1" - BELMONT MAPLE
3A	M09568-42-YK3	EA	MOLDING - TRIM/VEE - .2" X 1" X 40.1" - WASHED MAPLE
3A	M09568-44-YK0	EA	MOLDING - TRIM/VEE - .2" X 1" X 64.5" - CONCERT CHERRY
3A	M09568-44-YK1	EA	MOLDING - TRIM/VEE - .2" X 1" X 64.5" - HONEY CHERRY
3A	M09568-44-YK2	EA	MOLDING - TRIM/VEE - .2" X 1" X 64.5" - BELMONT MAPLE
3A	M09568-44-YK3	EA	MOLDING - TRIM/VEE - .2" X 1" X 64.5" - WASHED MAPLE
3A	M09501-30-SD1	EA	MOLDING - TRIM/VEE - .2" X 1" X 35.1" - CONCERT CHERRY
3A	M09501-30-SD2	EA	MOLDING - TRIM/VEE - .2" X 1" X 35.1" - WASHED MAPLE
3A	M09501-30-SD3	EA	MOLDING - TRIM/VEE - .2" X 1" X 35.1" - HONEY CHERRY
3A	M09515-97-WL4	EA	MOLDING - TRIM/VEE - .2" X 1" X 32.6" - CONCERT CHERRY
3A	M09515-97-WL5	EA	MOLDING - TRIM/VEE - .2" X 1" X 32.6" - WASHED MAPLE
3A	M09515-97-WL6	EA	MOLDING - TRIM/VEE - .2" X 1" X 32.6" - HONEY CHERRY
3A	M09515-97-YL6	EA	MOLDING - TRIM/VEE - .2" X 1" X 32.6" - BELMONT MAPLE
3A	M09566-11-YL4	EA	MOLDING - TRIM/VEE - .2" X 1" X 25.9" - CONCERT CHERRY
3A	M09566-11-YL5	EA	MOLDING - TRIM/VEE - .2" X 1" X 25.9" - HONEY CHERRY
3A	M09566-11-YL6	EA	MOLDING - TRIM/VEE - .2" X 1" X 25.9" - BELMONT MAPLE
3A	M09566-11-YL7	EA	MOLDING - TRIM/VEE - .2" X 1" X 25.9" - WASHED MAPLE
3A	M09534-17-UF3	EA	MOLDING - TRIM/VEE - .2" X 1" X 20.1" - SIERRA MAPLE
3A	M09534-17-UJ1	EA	MOLDING - TRIM/VEE - .2" X 1" X 20.1" - CONCERT CHERRY
3A	M09534-17-UJ2	EA	MOLDING - TRIM/VEE - .2" X 1" X 20.1" - WASHED MAPLE
3A	M09534-17-UJ3	EA	MOLDING - TRIM/VEE - .2" X 1" X 20.1" - HONEY CHERRY
3A	M09534-17-YG3	EA	MOLDING - TRIM/VEE - .2" X 1" X 20.1" - BELMONT MAPLE
3A	M09477-88-S34	EA	MOLDING - TRIM/VEE - .2" X 1" X 19.9" - WASHED MAPLE
3A	M09477-88-S35	EA	MOLDING - TRIM/VEE - .2" X 1" X 19.9" - SIERRA MAPLE
3A	M09477-88-YA0	EA	MOLDING - TRIM/VEE - .2" X 1" X 19.9" - CONCERT CHERRY
3A	M09477-88-Y37	EA	MOLDING - TRIM/VEE - .2" X 1" X 19.9" - HONEY CHERRY
3A	M09477-88-Y38	EA	MOLDING - TRIM/VEE - .2" X 1" X 19.9" - BELMONT MAPLE
3A	M09568-43-YK0	EA	MOLDING - TRIM/VEE - .2" X 1" X 18.5" - CONCERT CHERRY

COPYRIGHT © 2009 WINNEBAGO INDUSTRIES INC.

INTERIOR FINISH GROUP (CONTINUED)

MOLDINGS & TRIMS (CONTINUED)

KEY	PART NUMBER	U/M	DESCRIPTION
3A	M09568-43-YK1	EA	MOLDING - TRIM/VEE - .2" X 1" X 18.5" - HONEY CHERRY
3A	M09568-43-YK2	EA	MOLDING - TRIM/VEE - .2" X 1" X 18.5" - BELMONT MAPLE
3A	M09568-43-YK3	EA	MOLDING - TRIM/VEE - .2" X 1" X 18.5" - WASHED MAPLE
3A	M09515-71-Y37	EA	MOLDING - TRIM/VEE - .2" X 1" X 14.9" - HONEY CHERRY
3A	M09515-71-Y38	EA	MOLDING - TRIM/VEE - .2" X 1" X 14.9" - BELMONT MAPLE
3A	M09583-16-Y65	EA	MOLDING - TRIM/VEE - .2" X 1" X 13.3" - HONEY CHERRY
3A	M09583-16-YP0	EA	MOLDING - TRIM/VEE - .2" X 1" X 13.3" - SIERRA MAPLE
3A	M09583-16-YP1	EA	MOLDING - TRIM/VEE - .2" X 1" X 13.3" - CONCERT CHERRY
3A	M09583-16-YP2	EA	MOLDING - TRIM/VEE - .2" X 1" X 13.3" - BELMONT MAPLE
3A	M09566-04-YB0	EA	MOLDING - TRIM/VEE - .2" X 1" X 8.9" - CONCERT CHERRY
3A	M09566-04-WD3	EA	MOLDING - TRIM/VEE - .2" X 1" X 8.9" - HONEY CHERRY
3A	M09553-29-WH4	EA	MOLDING - TRIM/VEE - .4" X 1" X 94.4" - CONCERT CHERRY
3A	M09553-29-WH5	EA	MOLDING - TRIM/VEE - .4" X 1" X 94.4" - WASHED MAPLE
3A	M09553-29-WH6	EA	MOLDING - TRIM/VEE - .4" X 1" X 94.4" - SIERRA MAPLE
3A	M09553-29-YH7	EA	MOLDING - TRIM/VEE - .4" X 1" X 94.4" - BELMONT MAPLE
3A	M09553-29-YR3	EA	MOLDING - TRIM/VEE - .4" X 1" X 94.4" - HONEY CHERRY
3A	M09565-04-WH4	EA	MOLDING - TRIM/VEE - .4" X 1" X 89.5" - CONCERT CHERRY
3A	M09565-04-WH5	EA	MOLDING - TRIM/VEE - .4" X 1" X 89.5" - WASHED MAPLE
3A	M09565-04-WH6	EA	MOLDING - TRIM/VEE - .4" X 1" X 89.5" - SIERRA MAPLE
3A	M09565-04-YH7	EA	MOLDING - TRIM/VEE - .4" X 1" X 89.5" - BELMONT MAPLE
3A	M09565-04-YR3	EA	MOLDING - TRIM/VEE - .4" X 1" X 89.5" - HONEY CHERRY
3A	M09544-86-W37	EA	MOLDING - TRIM/VEE - .4" X 1" X 88.1" - SIERRA MAPLE
3A	M09544-86-W38	EA	MOLDING - TRIM/VEE - .4" X 1" X 88.1" - WASHED MAPLE
3A	M09538-39-U67	EA	MOLDING - TRIM/VEE - .4" X 1" X 82.6" - WASHED MAPLE
3A	M09538-39-U68	EA	MOLDING - TRIM/VEE - .4" X 1" X 82.6" - SIERRA MAPLE
3A	M09538-39-Y80	EA	MOLDING - TRIM/VEE - .4" X 1" X 82.6" - CONCERT CHERRY
3A	M09538-39-Y81	EA	MOLDING - TRIM/VEE - .4" X 1" X 82.6" - BELMONT MAPLE
3A	M09553-62-WH4	EA	MOLDING - TRIM/VEE - .4" X 1" X 81.4" - CONCERT CHERRY
3A	M09553-62-WH5	EA	MOLDING - TRIM/VEE - .4" X 1" X 81.4" - WASHED MAPLE
3A	M09553-62-WH6	EA	MOLDING - TRIM/VEE - .4" X 1" X 81.4" - SIERRA MAPLE
3A	M09553-62-YH7	EA	MOLDING - TRIM/VEE - .4" X 1" X 81.4" - BELMONT MAPLE
3A	M09553-62-YR3	EA	MOLDING - TRIM/VEE - .4" X 1" X 81.4" - HONEY CHERRY
3A	M09568-67-YL4	EA	MOLDING - TRIM/VEE - .4" X 1" X 81" - CONCERT CHERRY
3A	M09568-67-YL5	EA	MOLDING - TRIM/VEE - .4" X 1" X 81" - HONEY CHERRY
3A	M09568-67-YL6	EA	MOLDING - TRIM/VEE - .4" X 1" X 81" - BELMONT MAPLE
3A	M09568-67-YL7	EA	MOLDING - TRIM/VEE - .4" X 1" X 81" - WASHED MAPLE
3A	M09577-98-WH4	EA	MOLDING - TRIM/VEE - .4" X 1" X 80.2" - CONCERT CHERRY
3A	M09577-98-WH5	EA	MOLDING - TRIM/VEE - .4" X 1" X 80.2" - WASHED MAPLE
3A	M09577-98-WH6	EA	MOLDING - TRIM/VEE - .4" X 1" X 80.2" - SIERRA MAPLE
3A	M09577-98-YL5	EA	MOLDING - TRIM/VEE - .4" X 1" X 80.2" - HONEY CHERRY
3A	M09577-98-YL6	EA	MOLDING - TRIM/VEE - .4" X 1" X 80.2" - BELMONT MAPLE
3A	M09583-06-YL4	EA	MOLDING - TRIM/VEE - .4" X 1" X 79.3" - CONCERT CHERRY
3A	M09583-06-YL5	EA	MOLDING - TRIM/VEE - .4" X 1" X 79.3" - HONEY CHERRY
3A	M09583-06-YL6	EA	MOLDING - TRIM/VEE - .4" X 1" X 79.3" - BELMONT MAPLE
3A	M09583-06-YL7	EA	MOLDING - TRIM/VEE - .4" X 1" X 79.3" - WASHED MAPLE
3A	M09538-37-U67	EA	MOLDING - TRIM/VEE - .4" X 1" X 77.5" - WASHED MAPLE
3A	M09538-37-U68	EA	MOLDING - TRIM/VEE - .4" X 1" X 77.5" - SIERRA MAPLE
3A	M09538-37-Y80	EA	MOLDING - TRIM/VEE - .4" X 1" X 77.5" - CONCERT CHERRY
3A	M09538-37-Y81	EA	MOLDING - TRIM/VEE - .4" X 1" X 77.5" - BELMONT MAPLE
3A	M09553-65-WH4	EA	MOLDING - TRIM/VEE - .4" X 1" X 77" - CONCERT CHERRY
3A	M09553-65-WH5	EA	MOLDING - TRIM/VEE - .4" X 1" X 77" - WASHED MAPLE
3A	M09553-65-WH6	EA	MOLDING - TRIM/VEE - .4" X 1" X 77" - SIERRA MAPLE
3A	M09553-65-YH7	EA	MOLDING - TRIM/VEE - .4" X 1" X 77" - BELMONT MAPLE
3A	M09553-65-YR3	EA	MOLDING - TRIM/VEE - .4" X 1" X 77" - HONEY CHERRY
3A	M09553-64-WH4	EA	MOLDING - TRIM/VEE - .4" X 1" X 76.7" - CONCERT CHERRY
3A	M09553-64-WH5	EA	MOLDING - TRIM/VEE - .4" X 1" X 76.7" - WASHED MAPLE
3A	M09553-64-WH6	EA	MOLDING - TRIM/VEE - .4" X 1" X 76.7" - SIERRA MAPLE
3A	M09553-64-YH7	EA	MOLDING - TRIM/VEE - .4" X 1" X 76.7" - BELMONT MAPLE
3A	M09553-64-YR3	EA	MOLDING - TRIM/VEE - .4" X 1" X 76.7" - HONEY CHERRY
3A	M09577-14-Y79	EA	MOLDING - TRIM/VEE - .4" X 1" X 76.2" - SIERRA MAPLE
3A	M09577-14-Y80	EA	MOLDING - TRIM/VEE - .4" X 1" X 76.2" - CONCERT CHERRY
3A	M09577-14-Y81	EA	MOLDING - TRIM/VEE - .4" X 1" X 76.2" - BELMONT MAPLE
3A	M09583-63-Y91	EA	MOLDING - TRIM/VEE - .4" X 1" X 75.3" - CONCERT CHERRY
3A	M09583-63-Y92	EA	MOLDING - TRIM/VEE - .4" X 1" X 75.3" - HONEY CHERRY

COPYRIGHT © 2009 WINNEBAGO INDUSTRIES INC.

INTERIOR FINISH GROUP (CONTINUED)

MOLDINGS & TRIMS (CONTINUED)

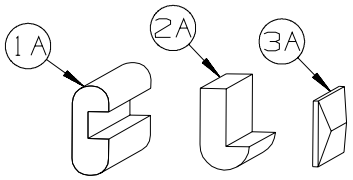

KEY	PART NUMBER	U/M	DESCRIPTION
3A	M09583-63-Y93	EA	MOLDING - TRIM/VEE - .4" X 1" X 75.3" - BELMONT MAPLE
3A	M09503-75-T78	EA	MOLDING - TRIM/VEE - .4" X 1" X 81" - CONCERT CHERRY
3A	M09503-75-YL5	EA	MOLDING - TRIM/VEE - .4" X 1" X 81" - HONEY CHERRY
3A	M09503-75-YL6	EA	MOLDING - TRIM/VEE - .4" X 1" X 81" - BELMONT MAPLE
3A	M09503-75-T79	EA	MOLDING - TRIM/VEE - .4" X 1" X 81" - WASHED MAPLE
3A	M09553-26-WH4	EA	MOLDING - TRIM/VEE - .4" X 1" X 74.1" - CONCERT CHERRY
3A	M09553-26-WH5	EA	MOLDING - TRIM/VEE - .4" X 1" X 74.1" - WASHED MAPLE
3A	M09553-26-WH6	EA	MOLDING - TRIM/VEE - .4" X 1" X 74.1" - SIERRA MAPLE
3A	M09553-26-YH7	EA	MOLDING - TRIM/VEE - .4" X 1" X 74.1" - BELMONT MAPLE
3A	M09553-26-YR3	EA	MOLDING - TRIM/VEE - .4" X 1" X 74.1" - HONEY CHERRY
3A	M09538-91-WH4	EA	MOLDING - TRIM/VEE - .4" X 1" X 73.8" - CONCERT CHERRY
3A	M09538-91-WH5	EA	MOLDING - TRIM/VEE - .4" X 1" X 73.8" - WASHED MAPLE
3A	M09538-91-WH6	EA	MOLDING - TRIM/VEE - .4" X 1" X 73.8" - SIERRA MAPLE
3A	M09538-91-YH7	EA	MOLDING - TRIM/VEE - .4" X 1" X 73.8" - BELMONT MAPLE
3A	M09538-91-YR3	EA	MOLDING - TRIM/VEE - .4" X 1" X 73.8" - HONEY CHERRY
3A	M09583-62-Y91	EA	MOLDING - TRIM/VEE - .4" X 1" X 73" - CONCERT CHERRY
3A	M09583-62-Y92	EA	MOLDING - TRIM/VEE - .4" X 1" X 73" - HONEY CHERRY
3A	M09583-62-Y93	EA	MOLDING - TRIM/VEE - .4" X 1" X 73" - BELMONT MAPLE
3A	M09568-71-YL4	EA	MOLDING - TRIM/VEE - .4" X 1" X 72.7" - CONCERT CHERRY
3A	M09568-71-YL5	EA	MOLDING - TRIM/VEE - .4" X 1" X 72.7" - HONEY CHERRY
3A	M09568-71-YL6	EA	MOLDING - TRIM/VEE - .4" X 1" X 72.7" - BELMONT MAPLE
3A	M09568-71-YL7	EA	MOLDING - TRIM/VEE - .4" X 1" X 72.7" - WASHED MAPLE
3A	M09565-97-WH4	EA	MOLDING - TRIM/VEE - .4" X 1" X 72.6" - CONCERT CHERRY
3A	M09565-97-WH5	EA	MOLDING - TRIM/VEE - .4" X 1" X 72.6" - WASHED MAPLE
3A	M09565-97-WH6	EA	MOLDING - TRIM/VEE - .4" X 1" X 72.6" - SIERRA MAPLE
3A	M09565-97-YH7	EA	MOLDING - TRIM/VEE - .4" X 1" X 72.6" - BELMONT MAPLE
3A	M09565-97-YR3	EA	MOLDING - TRIM/VEE - .4" X 1" X 72.6" - HONEY CHERRY
3A	M09568-12-WH4	EA	MOLDING - TRIM/VEE - .4" X 1" X 71.9" - CONCERT CHERRY
3A	M09568-12-WH5	EA	MOLDING - TRIM/VEE - .4" X 1" X 71.9" - WASHED MAPLE
3A	M09568-12-WH6	EA	MOLDING - TRIM/VEE - .4" X 1" X 71.9" - SIERRA MAPLE
3A	M09568-12-YH7	EA	MOLDING - TRIM/VEE - .4" X 1" X 71.9" - BELMONT MAPLE
3A	M09568-12-YR3	EA	MOLDING - TRIM/VEE - .4" X 1" X 71.9" - HONEY CHERRY
3A	M09565-01-WH4	EA	MOLDING - TRIM/VEE - .4" X 1" X 71.7" - CONCERT CHERRY
3A	M09565-01-WH5	EA	MOLDING - TRIM/VEE - .4" X 1" X 71.7" - WASHED MAPLE
3A	M09565-01-WH6	EA	MOLDING - TRIM/VEE - .4" X 1" X 71.7" - SIERRA MAPLE
3A	M09565-01-YH7	EA	MOLDING - TRIM/VEE - .4" X 1" X 71.7" - BELMONT MAPLE
3A	M09565-01-YR3	EA	MOLDING - TRIM/VEE - .4" X 1" X 71.7" - HONEY CHERRY
3A	M09544-15-WB4	EA	MOLDING - TRIM/VEE - .4" X 1" X 64.5" - CONCERT CHERRY
3A	M09544-15-WB5	EA	MOLDING - TRIM/VEE - .4" X 1" X 64.5" - WASHED MAPLE
3A	M09544-15-WB6	EA	MOLDING - TRIM/VEE - .4" X 1" X 64.5" - SIERRA MAPLE
3A	M09544-15-Y92	EA	MOLDING - TRIM/VEE - .4" X 1" X 64.5" - HONEY CHERRY
3A	M09544-15-Y93	EA	MOLDING - TRIM/VEE - .4" X 1" X 64.5" - BELMONT MAPLE
3A	M09538-94-WH4	EA	MOLDING - TRIM/VEE - .4" X 1" X 71.1" - CONCERT CHERRY
3A	M09538-94-WH5	EA	MOLDING - TRIM/VEE - .4" X 1" X 71.1" - WASHED MAPLE
3A	M09538-94-WH6	EA	MOLDING - TRIM/VEE - .4" X 1" X 71.1" - SIERRA MAPLE
3A	M09538-94-YH7	EA	MOLDING - TRIM/VEE - .4" X 1" X 71.1" - BELMONT MAPLE
3A	M09538-94-YR3	EA	MOLDING - TRIM/VEE - .4" X 1" X 71.1" - HONEY CHERRY
3A	M09565-78-WH4	EA	MOLDING - TRIM/VEE - .4" X 1" X 70.2" - CONCERT CHERRY
3A	M09565-78-WH5	EA	MOLDING - TRIM/VEE - .4" X 1" X 70.2" - WASHED MAPLE
3A	M09565-78-WH6	EA	MOLDING - TRIM/VEE - .4" X 1" X 70.2" - SIERRA MAPLE
3A	M09565-78-YH7	EA	MOLDING - TRIM/VEE - .4" X 1" X 70.2" - BELMONT MAPLE
3A	M09565-78-YR3	EA	MOLDING - TRIM/VEE - .4" X 1" X 70.2" - HONEY CHERRY
3A	M09501-92-T78	EA	MOLDING - TRIM/VEE - .4" X 1" X 70" - CONCERT CHERRY
3A	M09501-92-T79	EA	MOLDING - TRIM/VEE - .4" X 1" X 70" - WASHED MAPLE
3A	M09501-92-T80	EA	MOLDING - TRIM/VEE - .4" X 1" X 70" - SIERRA MAPLE
3A	M09501-92-Y81	EA	MOLDING - TRIM/VEE - .4" X 1" X 70" - BELMONT MAPLE
3A	M09538-27-WH4	EA	MOLDING - TRIM/VEE - .4" X 1" X 71.1" - CONCERT CHERRY
3A	M09538-27-U67	EA	MOLDING - TRIM/VEE - .4" X 1" X 71.1" - WASHED MAPLE
3A	M09538-27-U68	EA	MOLDING - TRIM/VEE - .4" X 1" X 71.1" - SIERRA MAPLE
3A	M09538-27-Y81	EA	MOLDING - TRIM/VEE - .4" X 1" X 71.1" - BELMONT MAPLE
3A	M09538-27-YR3	EA	MOLDING - TRIM/VEE - .4" X 1" X 71.1" - HONEY CHERRY
3A	M09568-08-Y91	EA	MOLDING - TRIM/VEE - .4" X 1" X 66.9" - CONCERT CHERRY

COPYRIGHT © 2009 WINNEBAGO INDUSTRIES INC.

INTERIOR FINISH GROUP (CONTINUED)

MOLDINGS & TRIMS (CONTINUED)

KEY	PART NUMBER	U/M	DESCRIPTION
3A	M09568-08-Y92	EA	MOLDING - TRIM/VEE - .4" X 1" X 66.9" - HONEY CHERRY
3A	M09568-08-Y93	EA	MOLDING - TRIM/VEE - .4" X 1" X 66.9" - BELMONT MAPLE
3A	M09553-03-WH4	EA	MOLDING - TRIM/VEE - .4" X 1" X 66.7" - CONCERT CHERRY
3A	M09553-03-WH5	EA	MOLDING - TRIM/VEE - .4" X 1" X 66.7" - WASHED MAPLE
3A	M09553-03-WH6	EA	MOLDING - TRIM/VEE - .4" X 1" X 66.7" - SIERRA MAPLE
3A	M09553-03-YH7	EA	MOLDING - TRIM/VEE - .4" X 1" X 66.7" - BELMONT MAPLE
3A	M09553-03-YR3	EA	MOLDING - TRIM/VEE - .4" X 1" X 66.7" - HONEY CHERRY
3A	M09538-93-WH4	EA	MOLDING - TRIM/VEE - .4" X 1" X 66.6" - CONCERT CHERRY
3A	M09538-93-WH5	EA	MOLDING - TRIM/VEE - .4" X 1" X 66.6" - WASHED MAPLE
3A	M09538-93-WH6	EA	MOLDING - TRIM/VEE - .4" X 1" X 66.6" - SIERRA MAPLE
3A	M09538-93-YH7	EA	MOLDING - TRIM/VEE - .4" X 1" X 66.6" - BELMONT MAPLE
3A	M09538-93-YR3	EA	MOLDING - TRIM/VEE - .4" X 1" X 66.6" - HONEY CHERRY
3A	M09544-33-W37	EA	MOLDING - TRIM/VEE - .4" X 1" X 66.5" - SIERRA MAPLE
3A	M09544-33-W38	EA	MOLDING - TRIM/VEE - .4" X 1" X 66.5" - WASHED MAPLE
3A	M09553-02-WH4	EA	MOLDING - TRIM/VEE - .4" X 1" X 66.4" - CONCERT CHERRY
3A	M09553-02-WH5	EA	MOLDING - TRIM/VEE - .4" X 1" X 66.4" - WASHED MAPLE
3A	M09553-02-WH6	EA	MOLDING - TRIM/VEE - .4" X 1" X 66.4" - SIERRA MAPLE
3A	M09553-02-YH7	EA	MOLDING - TRIM/VEE - .4" X 1" X 66.4" - BELMONT MAPLE
3A	M09553-02-YR3	EA	MOLDING - TRIM/VEE - .4" X 1" X 66.4" - HONEY CHERRY
3A	M09544-14-WB4	EA	MOLDING - TRIM/VEE - .4" X 1" X 64.5" - CONCERT CHERRY
3A	M09544-14-WB5	EA	MOLDING - TRIM/VEE - .4" X 1" X 64.5" - WASHED MAPLE
3A	M09544-14-WB6	EA	MOLDING - TRIM/VEE - .4" X 1" X 64.5" - SIERRA MAPLE
3A	M09544-14-Y92	EA	MOLDING - TRIM/VEE - .4" X 1" X 64.5" - HONEY CHERRY
3A	M09544-14-Y93	EA	MOLDING - TRIM/VEE - .4" X 1" X 64.5" - BELMONT MAPLE
3A	M09515-78-T78	EA	MOLDING - TRIM/VEE - .4" X 1" X 64.1" - CONCERT CHERRY
3A	M09515-78-T79	EA	MOLDING - TRIM/VEE - .4" X 1" X 64.1" - WASHED MAPLE
3A	M09515-78-T80	EA	MOLDING - TRIM/VEE - .4" X 1" X 64.1" - SIERRA MAPLE
3A	M09515-78-Y81	EA	MOLDING - TRIM/VEE - .4" X 1" X 64.1" - BELMONT MAPLE
3A	M09501-91-T78	EA	MOLDING - TRIM/VEE - .4" X 1" X 63.3" - CONCERT CHERRY
3A	M09501-91-T79	EA	MOLDING - TRIM/VEE - .4" X 1" X 63.3" - WASHED MAPLE
3A	M09501-91-T80	EA	MOLDING - TRIM/VEE - .4" X 1" X 63.3" - SIERRA MAPLE
3A	M09501-91-Y92	EA	MOLDING - TRIM/VEE - .4" X 1" X 63.3" - HONEY CHERRY
3A	M09501-91-Y93	EA	MOLDING - TRIM/VEE - .4" X 1" X 63.3" - BELMONT MAPLE
3A	M09503-91-T78	EA	MOLDING - TRIM/VEE - .4" X 1" X 63.1" - CONCERT CHERRY
3A	M09503-91-T79	EA	MOLDING - TRIM/VEE - .4" X 1" X 63.1" - WASHED MAPLE
3A	M09503-91-T80	EA	MOLDING - TRIM/VEE - .4" X 1" X 63.1" - SIERRA MAPLE
3A	M09503-91-Y92	EA	MOLDING - TRIM/VEE - .4" X 1" X 63.1" - HONEY CHERRY
3A	M09503-91-Y93	EA	MOLDING - TRIM/VEE - .4" X 1" X 63.1" - BELMONT MAPLE
3A	M09568-73-YL4	EA	MOLDING - TRIM/VEE - .4" X 1" X 62.3" - CONCERT CHERRY
3A	M09568-73-YL5	EA	MOLDING - TRIM/VEE - .4" X 1" X 62.3" - HONEY CHERRY
3A	M09568-73-YL6	EA	MOLDING - TRIM/VEE - .4" X 1" X 62.3" - BELMONT MAPLE
3A	M09568-73-YL7	EA	MOLDING - TRIM/VEE - .4" X 1" X 62.3" - WASHED MAPLE
3A	M09544-22-WB4	EA	MOLDING - TRIM/VEE - .4" X 1" X 61.7" - CONCERT CHERRY
3A	M09544-22-WB5	EA	MOLDING - TRIM/VEE - .4" X 1" X 61.7" - WASHED MAPLE
3A	M09544-22-WB6	EA	MOLDING - TRIM/VEE - .4" X 1" X 61.7" - SIERRA MAPLE
3A	M09544-22-YL5	EA	MOLDING - TRIM/VEE - .4" X 1" X 61.7" - HONEY CHERRY
3A	M09544-22-YL6	EA	MOLDING - TRIM/VEE - .4" X 1" X 61.7" - BELMONT MAPLE
3A	M09583-41-WH4	EA	MOLDING - TRIM/VEE - .4" X 1" X 61" - CONCERT CHERRY
3A	M09583-41-WH5	EA	MOLDING - TRIM/VEE - .4" X 1" X 61" - WASHED MAPLE
3A	M09583-41-WH6	EA	MOLDING - TRIM/VEE - .4" X 1" X 61" - SIERRA MAPLE
3A	M09583-41-YH7	EA	MOLDING - TRIM/VEE - .4" X 1" X 61" - BELMONT MAPLE
3A	M09583-41-YR3	EA	MOLDING - TRIM/VEE - .4" X 1" X 61" - HONEY CHERRY
3A	M09566-15-Y79	EA	MOLDING - TRIM/VEE - .4" X 1" X 60.2" - SIERRA MAPLE
3A	M09566-15-Y80	EA	MOLDING - TRIM/VEE - .4" X 1" X 60.2" - CONCERT CHERRY
3A	M09566-15-Y81	EA	MOLDING - TRIM/VEE - .4" X 1" X 60.2" - BELMONT MAPLE
3A	M09568-72-YL4	EA	MOLDING - TRIM/VEE - .4" X 1" X 58.8" - CONCERT CHERRY
3A	M09568-72-YL5	EA	MOLDING - TRIM/VEE - .4" X 1" X 58.8" - HONEY CHERRY
3A	M09568-72-YL6	EA	MOLDING - TRIM/VEE - .4" X 1" X 58.8" - BELMONT MAPLE
3A	M09568-72-YL7	EA	MOLDING - TRIM/VEE - .4" X 1" X 58.8" - WASHED MAPLE
3A	M09565-49-WH4	EA	MOLDING - TRIM/VEE - .4" X 1" X 58.7" - CONCERT CHERRY
3A	M09565-49-WH5	EA	MOLDING - TRIM/VEE - .4" X 1" X 58.7" - WASHED MAPLE
3A	M09565-49-WH6	EA	MOLDING - TRIM/VEE - .4" X 1" X 58.7" - SIERRA MAPLE
3A	M09565-49-YH7	EA	MOLDING - TRIM/VEE - .4" X 1" X 58.7" - BELMONT MAPLE
3A	M09565-49-YR3	EA	MOLDING - TRIM/VEE - .4" X 1" X 58.7" - HONEY CHERRY

COPYRIGHT © 2009 WINNEBAGO INDUSTRIES INC.

INTERIOR FINISH GROUP (CONTINUED)

MOLDINGS & TRIMS (CONTINUED)

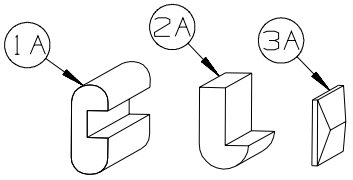

KEY	PART NUMBER	U/M	DESCRIPTION
3A	M09553-85-WB4	EA	MOLDING - TRIM/VEE - .4" X 1" X 43.4" - CONCERT CHERRY
3A	M09553-85-WB5	EA	MOLDING - TRIM/VEE - .4" X 1" X 43.4" - WASHED MAPLE
3A	M09553-85-WB6	EA	MOLDING - TRIM/VEE - .4" X 1" X 43.4" - SIERRA MAPLE
3A	M09553-85-Y92	EA	MOLDING - TRIM/VEE - .4" X 1" X 43.4" - HONEY CHERRY
3A	M09553-85-Y93	EA	MOLDING - TRIM/VEE - .4" X 1" X 43.4" - BELMONT MAPLE
3A	M09553-28-WH4	EA	MOLDING - TRIM/VEE - .4" X 1" X 48" - CONCERT CHERRY
3A	M09553-28-WH5	EA	MOLDING - TRIM/VEE - .4" X 1" X 48" - WASHED MAPLE
3A	M09553-28-WH6	EA	MOLDING - TRIM/VEE - .4" X 1" X 48" - SIERRA MAPLE
3A	M09553-28-YH7	EA	MOLDING - TRIM/VEE - .4" X 1" X 48" - BELMONT MAPLE
3A	M09553-28-YR3	EA	MOLDING - TRIM/VEE - .4" X 1" X 48" - HONEY CHERRY
3A	M09544-24-WB4	EA	MOLDING - TRIM/VEE - .4" X 1" X 46.2" - CONCERT CHERRY
3A	M09544-24-WB5	EA	MOLDING - TRIM/VEE - .4" X 1" X 46.2" - WASHED MAPLE
3A	M09544-24-WB6	EA	MOLDING - TRIM/VEE - .4" X 1" X 46.2" - SIERRA MAPLE
3A	M09544-24-Y92	EA	MOLDING - TRIM/VEE - .4" X 1" X 46.2" - HONEY CHERRY
3A	M09544-24-Y93	EA	MOLDING - TRIM/VEE - .4" X 1" X 46.2" - BELMONT MAPLE
3A	M09565-77-WH4	EA	MOLDING - TRIM/VEE - .4" X 1" X 42.5" - CONCERT CHERRY
3A	M09565-77-WH5	EA	MOLDING - TRIM/VEE - .4" X 1" X 42.5" - WASHED MAPLE
3A	M09565-77-WH6	EA	MOLDING - TRIM/VEE - .4" X 1" X 42.5" - SIERRA MAPLE
3A	M09565-77-YH7	EA	MOLDING - TRIM/VEE - .4" X 1" X 42.5" - BELMONT MAPLE
3A	M09565-77-YR3	EA	MOLDING - TRIM/VEE - .4" X 1" X 42.5" - HONEY CHERRY
3A	M09544-56-WB4	EA	MOLDING - TRIM/VEE - .4" X 1" X 6.1" - CONCERT CHERRY
3A	M09544-56-WB5	EA	MOLDING - TRIM/VEE - .4" X 1" X 6.1" - WASHED MAPLE
3A	M09544-56-WB6	EA	MOLDING - TRIM/VEE - .4" X 1" X 6.1" - SIERRA MAPLE
3A	M09538-70-Y91	EA	MOLDING - TRIM/VEE - .4" X 1" X 63.9" - CONCERT CHERRY
3A	M09538-70-U68	EA	MOLDING - TRIM/VEE - .4" X 1" X 63.9" - SIERRA MAPLE
3A	M09538-70-U67	EA	MOLDING - TRIM/VEE - .4" X 1" X 63.9" - WASHED MAPLE
3A	M09538-70-Y92	EA	MOLDING - TRIM/VEE - .4" X 1" X 63.9" - HONEY CHERRY
3A	M09538-70-Y93	EA	MOLDING - TRIM/VEE - .4" X 1" X 63.9" - BELMONT MAPLE

COPYRIGHT © 2009 WINNEBAGO INDUSTRIES INC.

INTERIOR FINISH GROUP (CONTINUED)

MOLDINGS & TRIMS (CONTINUED)

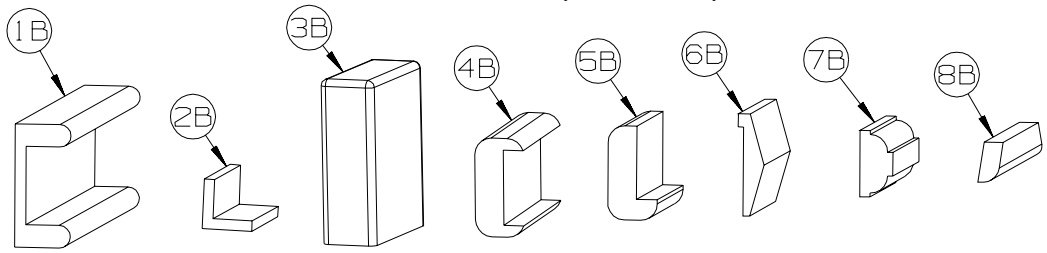

KEY	PART NUMBER	U/M	DESCRIPTION
1B	M09501-84-TG1	EA	MOLDING/TRIM - CAP/WALL - 2.2" X 85.9" - CONCERT CHERRY
1B	M09501-84-TG2	EA	MOLDING/TRIM - CAP/WALL - 2.2" X 85.9" - WASHED MAPLE
1B	M09501-84-TG3	EA	MOLDING/TRIM - CAP/WALL - 2.2" X 85.9" - HONEY CHERRY
1B	M09520-04-TD3	EA	MOLDING/TRIM - CAP/WALL - 2.2" X 80.5" - SIERRA MAPLE
1B	M09534-34-Y93	EA	MOLDING/TRIM - CAP/WALL - 2.2" X 80.5" - BELMONT MAPLE
2B	M09511-81-TA1	EA	MOLDING/TRIM - L SHAPE - .8"X .8"X 80.2" - CONCERT CHERRY
2B	M09511-81-TA2	EA	MOLDING/TRIM - L SHAPE - .8"X .8"X 80.2" - WASHED MAPLE
2B	M09511-81-TA3	EA	MOLDING/TRIM - L SHAPE - .8"X .8"X 80.2" - SIERRA MAPLE
2B	M09565-21-YL5	EA	MOLDING/TRIM - L SHAPE - .8"X .8"X 47.7" - HONEY CHERRY
2B	M09565-21-YL6	EA	MOLDING/TRIM - L SHAPE - .8"X .8"X 47.7" - BELMONT MAPLE
3B	M09515-81-T01	EA	MOLDING/HARDWOOD STRAIGHT - 74.3” - WASHED MAPLE
3B	M09515-81-T02	EA	MOLDING/HARDWOOD STRAIGHT - 74.3” - HONEY CHERRY
4B	M09511-42-T78	EA	MOLDING - TRIM - W/NOTCH - 1.5" X 86.4" - CONCERT CHERRY
4B	M09511-42-T79	EA	MOLDING - TRIM - W/NOTCH - 1.5" X 86.4" - WASHED MAPLE
4B	M09511-42-T80	EA	MOLDING - TRIM - W/NOTCH - 1.5" X 86.4" - SIERRA MAPLE
4B	M09511-42-W66	EA	MOLDING - TRIM - W/NOTCH - 1.5" X 86.4" - HONEY CHERRY
4B	M09511-42-YN2	EA	MOLDING - TRIM - W/NOTCH - 1.5" X 86.4" - BELMONT MAPLE
5B	M09515-18-T78	EA	MOLDING - HARDWOOD-W/NOTCH - 1.4"X 86.2" - CONCERT CHERRY
5B	M09553-66-U22	EA	MOLDING - HARDWOOD-W/NOTCH - 1.4"X 96" - WASHED MAPLE
5B	M09515-18-T80	EA	MOLDING - HARDWOOD-W/NOTCH - 1.4"X 86.2" - SIERRA MAPLE
5B	M09553-66-U21	EA	MOLDING - HARDWOOD-W/NOTCH - 1.4"X 96" - HONEY CHERRY
5B	M09515-12-YG3	EA	MOLDING - HARDWOOD-W/NOTCH - 1.4"X 86.14" - BELMONT MAPLE
6B	M09568-36-YK0	EA	MOLDING - TRIM/VEE - 1.5" X 76.3" - CONCERT CHERRY
6B	M09568-36-YK1	EA	MOLDING - TRIM/VEE - 1.5" X 76.3" - HONEY CHERRY
6B	M09568-36-YK2	EA	MOLDING - TRIM/VEE - 1.5" X 76.3" - BELMONT MAPLE
6B	M09568-36-YK3	EA	MOLDING - TRIM/VEE - 1.5" X 76.3" - WASHED MAPLE
6B	M09553-53-WH6	EA	MOLDING - TRIM/VEE - NOTCHED - 1.5" X 20.6" - SIERRA MAPLE
7B	Y00076-32-438	EA	MOLDING/TRIM - .5" X 1" X 96" - CHERRY (UNSTAINED)
7B	Y00076-22-438	EA	MOLDING/TRIM - .5" X 1" X 96" - MAPLE (UNSTAINED)
8B	M09525-92-T78	EA	MOLDING/TRIM - .5" X 1" X 75.6" - CONCERT CHERRY
8B	M09525-92-T79	EA	MOLDING/TRIM - .5" X 1" X 75.6" - WASHED MAPLE
8B	M09525-92-T80	EA	MOLDING/TRIM - .5" X 1" X 75.6" - SIERRA MAPLE
8B	M09525-92-Y92	EA	MOLDING/TRIM - .5" X 1" X 75.6" - HONEY CHERRY
8B	M09525-92-Y93	EA	MOLDING/TRIM - .5" X 1" X 75.6" - BELMONT MAPLE
8B	Y00086-D2-438	EA	MOLDING - VINYL WRAP - .7" X 1.6" X 96" - CONCERT CHERRY
8B	Y00086-A2-438	EA	MOLDING - VINYL WRAP - .7" X 1.6" X 96" - WASHED MAPLE
8B	Y00086-92-438	EA	MOLDING - VINYL WRAP - .7" X 1.6" X 96" - SIERRA MAPLE
8B	Y00086-82-438	EA	MOLDING - VINYL WRAP - .7" X 1.6" X 96" - HONEY CHERRY
8B	Y00086-E2-438	EA	MOLDING - VINYL WRAP - .7" X 1.6" X 96" - BELMONT MAPLE
8B	Y00087-D2-438	EA	MOLDING - VINYL WRAP - .7” X 2.9” X 96" - CONCERT CHERRY
8B	Y00087-A2-438	EA	MOLDING - VINYL WRAP - .7” X 2.9” X 96" - WASHED MAPLE
8B	Y00087-92-438	EA	MOLDING - VINYL WRAP - .7” X 2.9” X 96" - SIERRA MAPLE
8B	Y00087-82-438	EA	MOLDING - VINYL WRAP - .7” X 2.9” X 96" - HONEY CHERRY
8B	Y00087-E2-438	EA	MOLDING - VINYL WRAP - .7” X 2.9” X 96" - BELMONT MAPLE

COPYRIGHT © 2009 WINNEBAGO INDUSTRIES INC.

INTERIOR FINISH GROUP (CONTINUED)

MOLDINGS & TRIMS (CONTINUED)

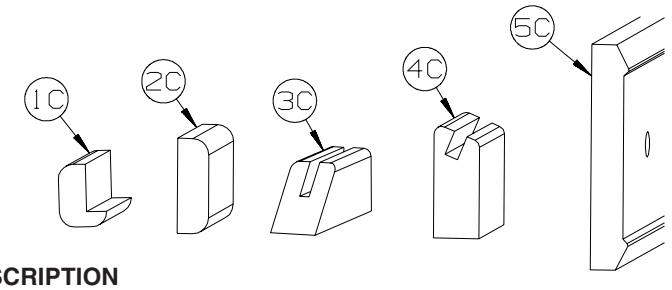

KEY	PART NUMBER	U/M	DESCRIPTION
1C	M09520-19-TD1	EA	MOLDING - TRIM - W/NOTCH - 1" X 86.3" - CONCERT CHERRY
1C	M09520-19-TD2	EA	MOLDING - TRIM - W/NOTCH - 1" X 86.3" - WASHED MAPLE
1C	M09520-19-TD3	EA	MOLDING - TRIM - W/NOTCH - 1" X 86.3" - HONEY CHERRY
1C	M09534-07-YG3	EA	MOLDING - TRIM - W/NOTCH - 1" X 85.7" - BELMONT MAPLE
1C	M09583-98-Y79	EA	MOLDING - HARDWOOD - .75" X 1.4" X 86.6" - SIERRA MAPLE
1C	M09583-98-Y80	EA	MOLDING - HARDWOOD - .75" X 1.4" X 86.6" - CONCERT CHERRY
1C	M09583-98-WH6	EA	MOLDING - HARDWOOD - .75" X 1.4" X 86.6" - BELMONT MAPLE
1C	M09565-68-YL5	EA	MOLDING - HARDWOOD - .75" X 1.4" X 81.9" - HONEY CHERRY
1C	M09565-68-WH5	EA	MOLDING - HARDWOOD - .75" X 1.4" X 81.9" - WASHED MAPLE
2C	M09511-46-T78	EA	MOLDING/TRIM - .5" X 1.5" X 86.5" - CONCERT CHERRY
2C	M09511-46-T79	EA	MOLDING/TRIM - .5" X 1.5" X 86.5" - WASHED MAPLE
2C	M09511-46-T80	EA	MOLDING/TRIM - .5" X 1.5" X 86.5" - SIERRA MAPLE
2C	M09515-13-YG3	EA	MOLDING/TRIM - .5" X 1.5" X 86.06" - BELMONT MAPLE
2C	M09553-82-YR0	EA	MOLDING/TRIM - .5" X 1.5" X 86" - HONEY CHERRY
3C	Y00223-22-438	EA	MOLDING - HARDWOOD/MAPLE - .7" X 1" X 96" - UNSTAINED MAPLE
3C	Y00223-32-438	EA	MOLDING - HARDWOOD/CHERRY - .7" X 1" X 96" - UNSTAINED CHERRY
3C	Y00223-42-438	EA	MOLDING - HARDWOOD/CHERRY - .7" X 1" X 96" - UNSTAINED OAK
4C	Y00054-A2-438	EA	MOLDING - VINYL - W/SLOT - .7"X 1.9"X 96" - WASHED MAPLE
4C	Y00054-D2-438	EA	MOLDING - VINYL - W/SLOT - .7"X 1.9"X 96" - CONCERT CHERRY
4C	Y00054-E2-438	EA	MOLDING - VINYL - W/SLOT - .7"X 1.9"X 96" - BELMONT MAPLE
4C	Y00054-22-438	EA	MOLDING - VINYL - W/SLOT - .7"X 1.9"X 96" - WASHED MAPLE
4C	Y00054-82-438	EA	MOLDING - VINYL - W/SLOT - .7"X 1.9"X 96" - HONEY CHERRY
4C	Y00054-92-438	EA	MOLDING - VINYL - W/SLOT - .7"X 1.9"X 96" - SIERRA MAPLE
4C	Y00276-A2-438	EA	MOLDING - VINYL - W/SLOT - .7"X 1.9"X 96" - WASHED MAPLE
4C	Y00276-D2-438	EA	MOLDING - VINYL - W/SLOT - .7"X 1.9"X 96" - CONCERT CHRRY
4C	Y00276-E2-438	EA	MOLDING - VINYL - W/SLOT - .7"X 1.9"X 96" - BELMONT MAPLE
4C	Y00276-82-438	EA	MOLDING - VINYL - W/SLOT - .7"X 1.9"X 96" - HONEY CHERRY
4C	Y00276-92-438	EA	MOLDING - VINYL - W/SLOT - .7"X 1.9"X 96" - SIERRA MAPLE
5C	Y00152-A2-438	EA	MOLDING/TRIM - VINYL - .6" X 3.5" X 96" - WASHED MAPLE
5C	Y00152-D2-438	EA	MOLDING/TRIM - VINYL - .6" X 3.5" X 96" - CONCERT CHERRY
5C	Y00152-E2-438	EA	MOLDING/TRIM - VINYL - .6" X 3.5" X 96" - BELMONT MAPLE
5C	Y00152-22-438	EA	MOLDING/TRIM - VINYL - .6" X 3.5" X 96" - WASHED MAPLE
5C	Y00152-92-438	EA	MOLDING/TRIM - VINYL - .6" X 3.5" X 96" - SIERRA MAPLE

COPYRIGHT © 2009 WINNEBAGO INDUSTRIES INC.

INTERIOR FINISH GROUP (CONTINUED)

MOLDINGS & TRIMS (CONTINUED)

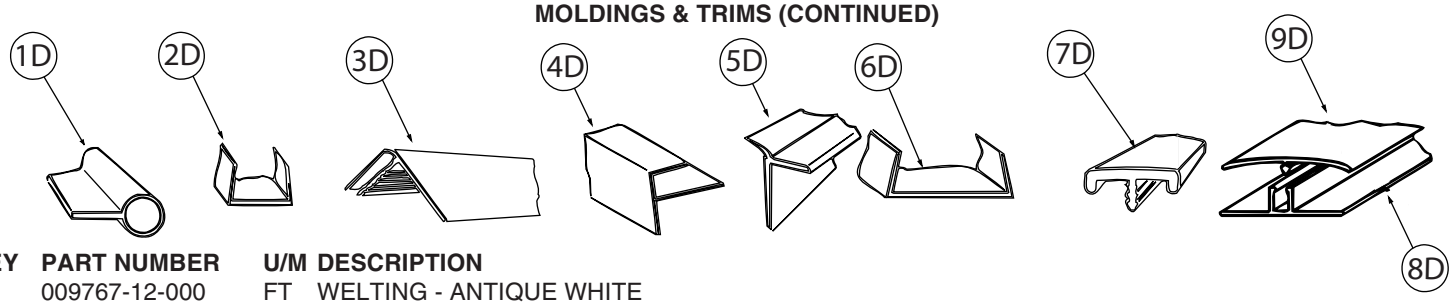

KEY	PART NUMBER	U/M	DESCRIPTION
1D	009767-12-000	FT	WELTING - ANTIQUE WHITE
2D	009778-25-000	FT	U-CHANNEL - 1" - BEIGE ILLUSION
2D	009778-26-000	FT	U-CHANNEL - 1 1/4" - BEIGE ILLUSION
2D	009778-38-000	FT	U-CHANNEL - 1" - BONE
2D	009778-34-000	FT	U-CHANNEL - 1" - CONCERT CHERRY
2D	009778-27-000	FT	U-CHANNEL - 1" - WASHED MAPLE
2D	009778-35-000	FT	U-CHANNEL - 1" - HONEY CHERRY
2D	009778-36-000	FT	U-CHANNEL - 1" - SIERRA MAPLE
2D	009778-39-000	FT	U-CHANNEL - 1" - BELMONT MAPLE
3D	009809-30-000	EA	MOLDING - CORNER - OUTSIDE - 1" X 84" - BEIGE ILLUSION
3D	009809-37-000	EA	MOLDING - CORNER - OUTSIDE - 1" X 84" - BONE
3D	009809-33-000	EA	MOLDING - CORNER - OUTSIDE - 1" X 84" - CONCERT CHERRY
3D	009809-31-000	EA	MOLDING - CORNER - OUTSIDE - 1" X 84" - WASHED MAPLE
3D	009809-35-000	EA	MOLDING - CORNER - OUTSIDE - 1" X 84" - SIERRA MAPLE
4D	009812-31-000	EA	MOLDING - CORNER - 1/2" W/1/4"CHAN X 84" - BEIGE ILLUSION
4D	009812-40-000	EA	MOLDING - CORNER - 1/2" W/1/4"CHAN X 84" - BONE
4D	009812-36-000	EA	MOLDING - CORNER - 1/2" W/1/4"CHAN X 84" - CONCERT CHERRY
4D	009812-33-000	EA	MOLDING - CORNER - 1/2" W/1/4"CHAN X 84" - WASHED MAPLE
4D	009812-37-000	EA	MOLDING - CORNER - 1/2" W/1/4"CHAN X 84" - HONEY CHERRY
4D	009812-38-000	EA	MOLDING - CORNER - 1/2" W/1/4"CHAN X 84" - SIERRA MAPLE
4D	009812-41-000	EA	MOLDING - CORNER - 1/2" W/1/4"CHAN X 84" - BELMONT MAPLE
5D	168943-01-01A	FT	MOLDING - REVERSE COVE - T-SHAPED - BRIGHT WHITE
5D	168943-01-02A	FT	MOLDING - REVERSE COVE - T-SHAPED - BONE
6D	070504-42-000	FT	U-CHANNEL - PLASTIC - .13" X 84" - BEIGE ILLUSION
6D	070504-69-000	FT	U-CHANNEL - PLASTIC - .13" X 84" - BONE
6D	070504-43-000	FT	U-CHANNEL - PLASTIC - .9" X 96" - BEIGE ILLUSION
6D	070504-70-000	FT	U-CHANNEL - PLASTIC - .8" X 84" - BONE
6D	070504-60-000	FT	U-CHANNEL - PLASTIC - .13" X 84" - CONCERT CHERRY
6D	070504-61-000	FT	U-CHANNEL - PLASTIC - .9" X 84" - CONCERT CHERRY
6D	070504-50-000	FT	U-CHANNEL - PLASTIC - .13" X 96" - WASHED MAPLE
6D	070504-51-000	FT	U-CHANNEL - PLASTIC - .9" X 96" - WASHED MAPLE
6D	070504-62-000	FT	U-CHANNEL - PLASTIC - 1.65" X 84" - HONEY CHERRY
6D	070504-63-000	FT	U-CHANNEL - PLASTIC - .9" X 84" - HONEY CHERRY
6D	070504-65-000	FT	U-CHANNEL - PLASTIC - .07" X 96" - SIERRA MAPLE
6D	070504-66-000	FT	U-CHANNEL - PLASTIC - .8" X 84" - SIERRA MAPLE
7D	083620-25-000	FT	MOLDING-T - W/EDGE LIP - 7/8" FACE - BONE
7D	083620-19-000	FT	MOLDING-T - W/EDGE LIP - 7/8" FACE - WASHED MAPLE
7D	083620-24-000	FT	MOLDING-T - W/EDGE LIP - 7/8" FACE - HONEY CHERRY
7D	083620-22-000	FT	MOLDING-T - W/EDGE LIP - 7/8" FACE - SIERRA MAPLE
8D	086229-01-000	EA	RETAINER - BATTEN - .75" X 92.1" - ANY COLOR
9D	086229-12-000	EA	BATTEN - 1.5" OFFSET X 96.8" - MODERN IVORY
9D	086229-20-000	EA	BATTEN - 1" X 96" - BEIGE

COPYRIGHT © 2009 WINNEBAGO INDUSTRIES INC.

INTERIOR FINISH GROUP (CONTINUED)

MOLDINGS & TRIMS (CONTINUED)

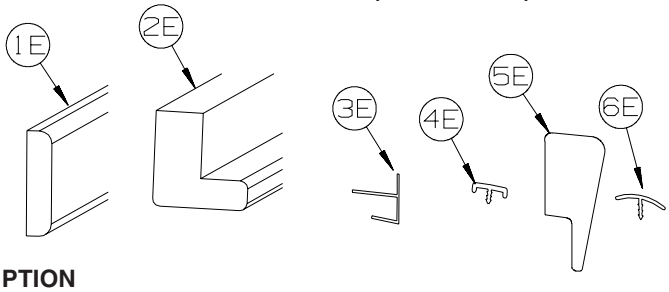

KEY	PART NUMBER	U/M	DESCRIPTION
1E	100818-01-23A	EA	MOLDING - VINYL WRPPD - 1.6" X .4" X 84" - CONCERT CHERRY
1E	100818-01-21A	EA	MOLDING - VINYL WRAPPED - 1.6" X .4" X 84" - WASHED MAPLE
1E	100818-01-14A	EA	MOLDING - VINYL WRAPPED - 1.6" X .4" X 84" - HONEY CHERRY
1E	100818-01-22A	EA	MOLDING - VINYL WRAPPED - 1.6" X .4" X 84" - SIERRA MAPLE
2E	100819-01-23A	EA	MOLDING - VYL WRPPD-L-SHPD-1.5"X1.5"X84" - CONCERT CHERRY
2E	100819-01-21A	EA	MOLDING - VINYL WRAPPED-L-SHAPED-1.5"X1.5"X84" - WASHED MAPLE
2E	100819-01-14A	EA	MOLDING - VINYL WRAPPED-L-SHAPED-1.5"X1.5"X84" - HONEY CHERRY
2E	100819-01-22A	EA	MOLDING - VINYL WRAPPED-L-SHAPED-1.5"X1.5"X84" - SIERRA MAPLE
3E	103186-01-07A	FT	MOLDING/PLASTIC - 3/8" U-CHANNEL-3/4" FACE - BEIGE ILLUSION
3E	103186-01-10A	FT	MOLDING/PLASTIC - 3/8" U-CHANNEL-3/4" FACE - CONCERT CHERRY
3E	103186-01-08A	FT	MOLDING/PLASTIC - 3/8" U-CHANNEL-3/4" FACE- 8' - WASHED MAPLE
3E	103186-01-11A	FT	MOLDING/PLASTIC - 3/8" U-CHANNEL-3/4" FACE - HONEY CHERRY
3E	103186-01-12A	FT	MOLDING/PLASTIC - 3/8" U-CHANNEL-3/4" FACE - SIERRA MAPLE
3E	103186-01-14A	FT	MOLDING/PLASTIC - 3/8" U-CHANNEL-3/4" FACE - BELMONT MAPLE
3E	103186-02-07A	FT	MOLDING/PLASTIC-1" U-CHANNEL-1 3/8" FACE - BEIGE ILLUSION
3E	103186-02-10A	FT	MOLDING/PLASTIC - 1" U-CHANNEL-1 3/8" FACE - CONCERT CHERRY
3E	103186-02-08A	FT	MOLDING/PLASTIC - 1" U-CHANNEL-1 3/8" FACE - WASHED MAPLE
3E	103186-02-11A	FT	MOLDING/PLASTIC - 1" U-CHANNEL-1 3/8" FACE - HONEY CHERRY
3E	103186-02-12A	FT	MOLDING/PLASTIC - 1" U-CHANNEL-1 3/8" FACE - SIERRA MAPLE
4E	104676-02-14A	FT	MOLDING-T - W/EDGE LIP - 11/16" FACE - BELMONT MAPLE
5E	105004-01-21A	EA	MOLDING - VINYL WRAP - 1" X 96" - WASHED MAPLE
5E	105004-01-24A	EA	MOLDING - VINYL WRAP - 1" X 96" - HONEY CHERRY
5E	105004-01-22A	EA	MOLDING - VINYL WRAP - 1" X 96" - SIERRA MAPLE
6E	105709-02-000	FT	MOLDING-T - 1" FACE - 5/16" BARB - BEIGE ILLUSION

COPYRIGHT © 2009 WINNEBAGO INDUSTRIES INC.

INTERIOR FINISH GROUP (CONTINUED)

MOLDINGS & TRIMS (CONTINUED)

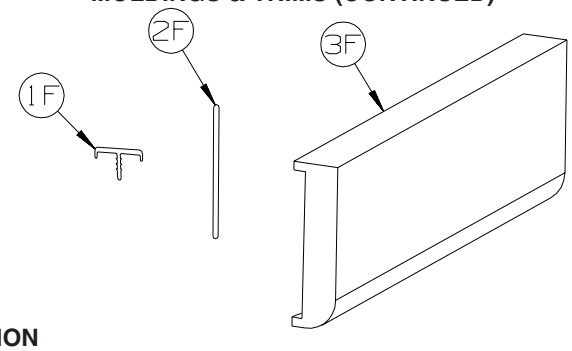

KEY	PART NUMBER	U/M	DESCRIPTION
1F	119520-01-01A	FT	MOLDING-T - OFFSET W/EDGE LIP - 1.3" FACE - OFF WHITE
1F	119520-03-02A	FT	MOLDING-T - OFFSET W/EDGE LIP - 1" FACE - CONCERT CHERRY
1F	119520-03-03A	FT	MOLDING-T - OFFSET W/EDGE LIP - 1" FACE - WASHED MAPLE
1F	119520-03-05A	FT	MOLDING-T - OFFSET W/EDGE LIP - 1" FACE - SIERRA MAPLE
1F	119520-03-06A	FT	MOLDING-T - OFFSET W/EDGE LIP - 1" FACE - HONEY CHERRY
1F	119520-03-07A	FT	MOLDING-T - OFFSET W/EDGE LIP - 1" FACE - BELMONT MAPLE
2F	127842-01-01A	FT	SEAL - SIGHT SHIELD - 2" BLACK
	160300-A2-438	EA	LUMBER - VINYL WRAPPED - .7" X .75" X 96" - CONCERT CHERRY
	160300-D2-438	EA	LUMBER - VINYL WRAPPED - .7" X 1.5" X 96" - CONCERT CHERRY
	160300-E2-438	EA	LUMBER - VINYL WRAPPED - .7" X 2" X 96" - CONCERT CHERRY
	160300-F2-438	EA	LUMBER - VINYL WRAPPED - .7" X 2.5" X 96" - CONCERT CHERRY
	160300-G2-438	EA	LUMBER - VINYL WRAPPED - .7" X 3" X 96" - CONCERT CHERRY
	160300-H2-438	EA	LUMBER - VINYL WRAPPED - .7" X 3.5" X 96" - CONCERT CHERRY
	160300-J2-438	EA	LUMBER - VINYL WRAPPED - .7" X 5.5" X 96" - CONCERT CHERRY
	160300-K2-438	EA	LUMBER - VINYL WRAPPED - .7" X 3.9" X 96" - CONCERT CHERRY
	160300-R2-438	EA	LUMBER - VINYL WRAPPED - .7" X 3" X 96" - CONCERT CHERRY
3F	160301-D2-134	EA	MOLDING - VINYL WRAPPED - .7" X 1.6" X 84" - CONCERT CHERRY
3F	160301-D2-743	EA	MOLDING - VINYL WRAPPED - .7" X 1.6" X 108" - CONCERT CHERRY
3F	160301-F2-134	EA	MOLDING - VINYL WRAPPED - .7" X 2.5" X 84" - CONCERT CHERRY
3F	160301-F2-743	EA	MOLDING - VINYL WRPPD - .7" X 2.5" X 108" - CONCERT CHERRY
3F	160301-F2-438	EA	MOLDING - VINYL WRPPD - .7" X 2.5" X 96" - CONCERT CHERRY
	146419-A2-438	EA	LUMBER - VINYL WRAPPED - .7" X .75" X 96" - HONEY CHERRY
	146419-D2-438	EA	LUMBER - VINYL WRAPPED - .7" X 1.5" X 96" - HONEY CHERRY
	146419-E2-438	EA	LUMBER - VINYL WRAPPED - .7" X 2" X 96" - HONEY CHERRY
	146419-F2-438	EA	LUMBER - VINYL WRAPPED - .7" X 2.5" X 96" - HONEY CHERRY
	146419-G2-438	EA	LUMBER - VINYL WRAPPED - .7" X 3" X 96" - HONEY CHERRY
	146419-H2-438	EA	LUMBER - VINYL WRAPPED - .7" X 3.5" X 96" - HONEY CHERRY
	146419-J2-438	EA	LUMBER - VINYL WRAPPED - .7" X 5.5" X 96" - HONEY CHERRY
	146419-J2-743	EA	LUMBER - VINYL WRAPPED - .7" X 5.5" X 108" - HONEY CHERRY
	146419-K2-438	EA	LUMBER - VINYL WRAPPED - .7" X 3.9" X 96" - HONEY CHERRY

COPYRIGHT © 2009 WINNEBAGO INDUSTRIES INC.

INTERIOR FINISH GROUP (CONTINUED)

MOLDINGS & TRIMS (CONTINUED)

KEY	PART NUMBER	U/M	DESCRIPTION
	146419-R2-438	EA	LUMBER - VINYL WRAPPED - .7" X 3" X 96" - HONEY CHERRY
	146419-S2-438	EA	LUMBER - VINYL WRAPPED/FULL - .7"X 3.5"X 96" - HONEY CHERRY
	146419-T2-438	EA	LUMBER - VINYL WRAPPED/FULL - .7"X 5.5"X 96" - HONEY CHERRY
3F	146425-D2-134	EA	MOLDING - VINYL WRAPPED - .7" X 1.6" X 83.9" - HONEY CHERRY
3F	146425-F2-438	EA	MOLDING - VINYL WRAPPED - .7" X 2.6" X 96" - HONEY CHERRY
	149325-A2-438	EA	LUMBER - VINYL WRAPPED - .7" X .75" X 96" - WASHED MAPLE
	149325-D2-438	EA	LUMBER - VINYL WRAPPED - .7" X 1.5" X 96" - WASHED MAPLE
	149325-E2-438	EA	LUMBER - VINYL WRAPPED - .7" X 2" X 96" - WASHED MAPLE
	149325-F2-438	EA	LUMBER - VINYL WRAPPED - .7" X 2.5" X 96" - WASHED MAPLE
	149325-G2-438	EA	LUMBER - VINYL WRAPPED - .7" X 3" X 96" - WASHED MAPLE
	149325-H2-438	EA	LUMBER - VINYL WRAPPED - .7" X 3.5" X 96" - WASHED MAPLE
	149325-J2-438	EA	LUMBER - VINYL WRAPPED - .7" X 5.5" X 96" - WASHED MAPLE
	149325-J2-743	EA	LUMBER - VINYL WRAPPED - .7" X 5.5" X 108" - WASHED MAPLE
	149325-K2-438	EA	LUMBER - VINYL WRAPPED - .7" X 3.9" X 96" - WASHED MAPLE
	149325-R2-438	EA	LUMBER - VINYL WRAPPED - .7" X 3" X 96" - WASHED MAPLE
3F	149326-D2-134	EA	MOLDING - VINYL WRAPPED - .7" X 1.5" X 83.9" - WASHED MAPLE
3F	149326-D2-743	EA	MOLDING - VINYL WRAPPED - .7" X 1.5" X 108" - WASHED MAPLE
3F	149326-F2-134	EA	MOLDING - VINYL WRAPPED - .7" X 2.5" X 83.9" - WASHED MAPLE
3F	149326-F2-438	EA	MOLDING - VINYL WRAPPED - .7" X 2.5" X 96" - WASHED MAPLE
3F	149326-F2-743	EA	MOLDING - VINYL WRAPPED - .7" X 2.5" X 108" - WASHED MAPLE
	149330-A2-438	EA	LUMBER - VINYL WRAPPED - .7" X .75" X 96" - SIERRA MAPLE
	149330-D2-438	EA	LUMBER - VINYL WRAPPED - .7" X 1.5" X 96" - SIERRA MAPLE
	149330-E2-438	EA	LUMBER - VINYL WRAPPED - .7" X 2" X 96" - SIERRA MAPLE
	149330-F2-438	EA	LUMBER - VINYL WRAPPED - .7" X 2.5" X 96" - SIERRA MAPLE
	149330-G2-438	EA	LUMBER - VINYL WRAPPED - .7" X 3" X 96" - SIERRA MAPLE
	149330-H2-438	EA	LUMBER - VINYL WRAPPED - .7" X 3.5" X 96" - SIERRA MAPLE
	149330-J2-438	EA	LUMBER - VINYL WRAPPED - .7" X 5.5" X 96" - SIERRA MAPLE
	149330-J2-743	EA	LUMBER - VINYL WRAPPED - .7" X 5.5" X 108" - SIERRA MAPLE
	149330-K2-438	EA	LUMBER - VINYL WRAPPED - .7" X 3.9" X 96" - SIERRA MAPLE
	149330-R2-438	EA	LUMBER - VINYL WRAPPED - .7" X 3" X 96" - SIERRA MAPLE
3F	166208-D2-134	EA	MOLDING - VINYL WRAP - .7" X 1.5" X 84" - BELMONT MAPLE
3F	166208-D2-743	EA	MOLDING - VINYL WRAP - .7" X 1.5" X 108" - BELMONT MAPLE
3F	166208-F2-134	EA	MOLDING - VINYL WRAP - .7" X 2.5" X 84" - BELMONT MAPLE
3F	166208-F2-438	EA	MOLDING - VINYL WRAP - .7" X 2.5" X 96" - BELMONT MAPLE
3F	166208-F2-743	EA	MOLDING - VINYL WRAP - .7" X 2.5" X 108" - BELMONT MAPLE
	166206-A2-438	EA	LUMBER - VINYL WRAPPED - .7" X .75" X 96" - BELMONT MAPLE
	166206-D2-438	EA	LUMBER - VINYL WRAPPED - .7" X 1.5" X 96" - BELMONT MAPLE
	166206-E2-438	EA	LUMBER - VINYL WRAPPED - .7" X 2" X 96" - BELMONT MAPLE
	166206-F2-438	EA	LUMBER - VINYL WRAPPED - .7" X 2.5" X 96" - BELMONT MAPLE
	166206-G2-438	EA	LUMBER - VINYL WRAPPED - .7" X 3" X 96" - BELMONT MAPLE
	166206-H2-438	EA	LUMBER - VINYL WRAPPED - .7" X 3.5" X 96" - BELMONT MAPLE
	166206-J2-438	EA	LUMBER - VINYL WRAPPED - .7" X 5.5" X 96" - BELMONT MAPLE
	166206-K2-438	EA	LUMBER - VINYL WRAPPED - .7" X 3.9" X 96" - BELMONT MAPLE
	166206-R2-438	EA	LUMBER - VINYL WRAPPED - .7" X 3" X 96" - BELMONT MAPLE

COPYRIGHT © 2009 WINNEBAGO INDUSTRIES INC.

INTERIOR FINISH GROUP (CONTINUED)

MOLDINGS & TRIMS (CONTINUED)

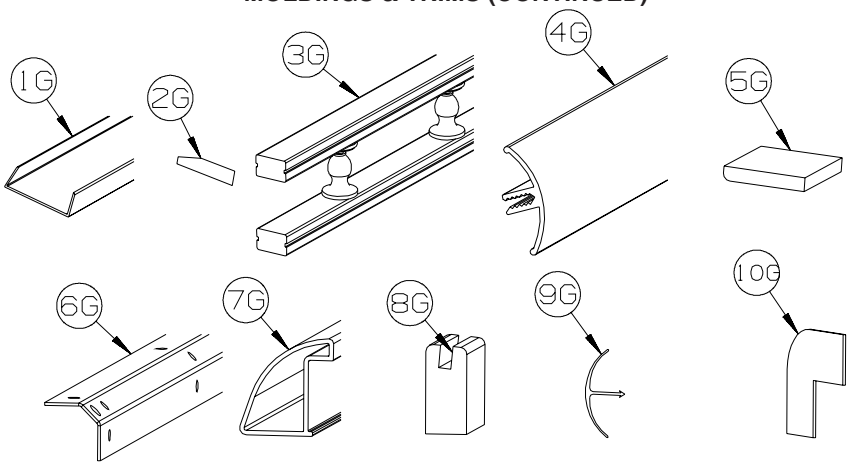

KEY	PART NUMBER	U/M	DESCRIPTION
1G	141260-01-01A	FT	U-CHANNEL - 1" - VILLAGE OAK
1G	141260-01-02A	FT	U-CHANNEL - 1" - GRADY BROWN
2G	146306-01-01A	FT	TRANSITION - CARPET/TILE
3G	150167-01-03A	EA	RAIL - DECORATIVE - 96" - WASHED MAPLE
3G	150167-01-08A	EA	RAIL - DECORATIVE - 96" - HONEY CHERRY
3G	150167-01-09A	EA	RAIL - DECORATIVE - 96" - SIERRA MAPLE
3G	150167-01-10A	EA	RAIL - DECORATIVE - 96" - BELMONT MAPLE
4G	151653-10-02A	EA	TRIM/RADIUS - CABINET CORNER - 79.6" - DULL METALLIC
4G	151653-13-02A	EA	TRIM/RADIUS - CABINET CORNER - 79.8" - DULL METALLIC
5G	M09568-04-Y91	EA	MOLDING/TRIM - .3" X 1.5" X 73.6" - CONCERT CHERRY
5G	M09568-04-W80	EA	MOLDING/TRIM - .3" X 1.5" X 73.6" - SIERRA MAPLE
5G	M09568-04-W79	EA	MOLDING/TRIM - .3" X 1.5" X 73.6" - WASHED MAPLE
6G	151861-01-02B	EA	ANGLE - SUPPORT/CORNER - 1.4" X 12.5" - E-COATED
6G	151861-02-02B	EA	ANGLE - SUPPORT/CORNER - 1.4" X 20.1" - E-COATED
6G	151861-03-02B	EA	ANGLE - SUPPORT/CORNER - 1.4" X 26.7" - E-COATED
6G	151861-04-02B	EA	ANGLE - SUPPORT/CORNER - 1.4" X 32.7" - E-COATED
6G	151861-05-02B	EA	ANGLE - SUPPORT/CORNER - 1.4" X 78.6" - E-COATED
6G	151861-06-02B	EA	ANGLE - SUPPORT/CORNER - 1.4" X 59" - E-COATED
6G	151861-08-02B	EA	ANGLE - SUPPORT/CORNER - 1.4" X 22.2" - E-COATED
6G	151861-09-02B	EA	ANGLE - SUPPORT/CORNER - 1.4" X 14.9" - E-COATED
7G	151893-01-02A	EA	TRIM/RADIUS - CABINET BOTTOM - 72.6" - DULL METALLIC
8G	Y00419-D2-438	EA	MOLDING - VINYL/BEVELED W/SLOT - 1.6"X 96" - CONCERT CHERRY
8G	Y00419-E2-438	EA	MOLDING - VINYL/BEVELED W/SLOT - 1.6"X 96" - BELMONT MAPLE
8G	Y00419-92-438	EA	MOLDING - VINYL/BEVELED W/SLOT - 1.6"X 96" - SIERRA MAPLE
9G	156464-01-01A	FT	MOLDING - CORNER - RADIUS/PLASTIC - 8' - HONEY CHERRY
9G	156464-01-02A	FT	MOLDING - CORNER - RADIUS/PLASTIC - 8' - WASHED MAPLE
9G	156464-01-04A	FT	MOLDING - CORNER - RADIUS/PLASTIC - 8' - BELMONT MAPLE
9G	156464-01-05A	FT	MOLDING - CORNER - RADIUS/PLASTIC - 8' - SIERRA MAPLE
9G	156464-01-06A	FT	MOLDING - CORNER - RADIUS/PLASTIC - 8' - CONCERT CHERRY
9G	156464-03-03A	FT	MOLDING - CORNER - RADIUS/PLASTIC - 8' - BONE
	081521-02-007	EA	MOUNT - METAL MOLDING - F/RADIUS CORNER MOLDING - 151.5"
10G	160989-01-06A	FT	CAP - CORNER - RADIUS MOLDING - PLASTIC - WASHED MAPLE
10G	160989-01-07A	FT	CAP - CORNER - RADIUS MOLDING - PLASTIC - HONEY CHERRY
10G	160989-01-10A	FT	CAP - CORNER - RADIUS MOLDING - PLASTIC - BELMONT MAPLE

COPYRIGHT © 2009 WINNEBAGO INDUSTRIES INC.

INTERIOR FINISH GROUP (CONTINUED)

PANELING & LAMINATES

KEY	PART NUMBER	U/M	DESCRIPTION
	000885-B0-000	SF	PARTICLE BOARD - 3/8" X 4' X 8' - 2 SIDED - SIERRA MAPLE
	000885-B1-000	SF	PARTICLE BOARD - 3/8" X 4' X 8' - 1 SIDED - SIERRA MAPLE
	000885-B2-000	SF	PARTICLE BOARD - 3/4" X 4' X 8' - 2 SIDED - SIERRA MAPLE
	000885-B3-000	SF	PARTICLE BOARD - 1/2" X 4' X 8' - 2 SIDED - SIERRA MAPLE
	000885-C3-000	SF	PARTICLE BOARD - 3/8" X 4' X 8' - 1 SIDED - WHT THATCH EMB
	074497-48-000	SF	PANELING - SIERRA MAPLE - 1/8" X 4' X 8'
	074497-52-000	SF	PANELING/PAPER WRAPPED - SCULPTURES PAR - 1/8" X 48" X 100"
	076773-19-000	SF	PANELING - 2 SIDED/SIERRA MAPLE - 1/8" X 4' X 8'
	076773-24-000	SF	PANELING - 1 SIDE/SIERRA MAPLE - 1/8" X 4' X 7'
	088272-M9-000	SF	PANELING - WHITE THATCHED - 4' X 8'
	088272-P3-000	SF	PANELING - GLACIER - 4' X 7.4' (Y01, Y02)
	088272-P0-000	SF	PANELING - FAUX - 4' X 7.4' (Y03)
	074498-A2-000	SF	LAMINATE - PLASTIC - PHANTOM GRAY - 5' X 8'
	074498-C5-000	SF	LAMINATE - PLASTIC - AMBER GREEN - 5' X 8' (Y01)
	074498-B7-000	SF	LAMINATE - PLASTIC - HOUSE ROCK - 4' X 8' (Y02)
	074498-B8-000	SF	LAMINATE - PLASTIC - CLASSIC ROCK - 5' X 8' (Y03)
	076325-71-000	FT	MOLDING - EDGEBAND - 1 5/16" X .038" - GRAY
	076325-84-000	FT	MOLDING - EDGEBAND - 1 5/16" X .03" - SIERRA MAPLE
	085284-J4-000	FT	BATT TAPE - ADHESIVE BACKED - WOODGRAINED - SIERRA MAPLE
	085284-M2-000	FT	BATT TAPE - ADHESIVE BACKED - DECORATIVE - GLACIER (Y01, Y02)
	085284-L9-000	FT	BATT TAPE - ADHESIVE BACKED - DECORATIVE - FAUX (Y03)
	088263-J1-000	EA	BATT STRIP - DECORATIVE - SIERRA MAPLE
	088263-K5-000	EA	BATT STRIP - DECORATIVE - WHITE THATCHED - 8'
	088263-L9-000	EA	BATT STRIP - DECORATIVE - GLACIER (Y01, Y02)
	088263-L6-000	EA	BATT STRIP - DECORATIVE - FAUX (Y03)

COPYRIGHT © 2009 WINNEBAGO INDUSTRIES INC.

INTERIOR FINISH GROUP (CONTINUED)

INTERIOR TRIM LAYOUT

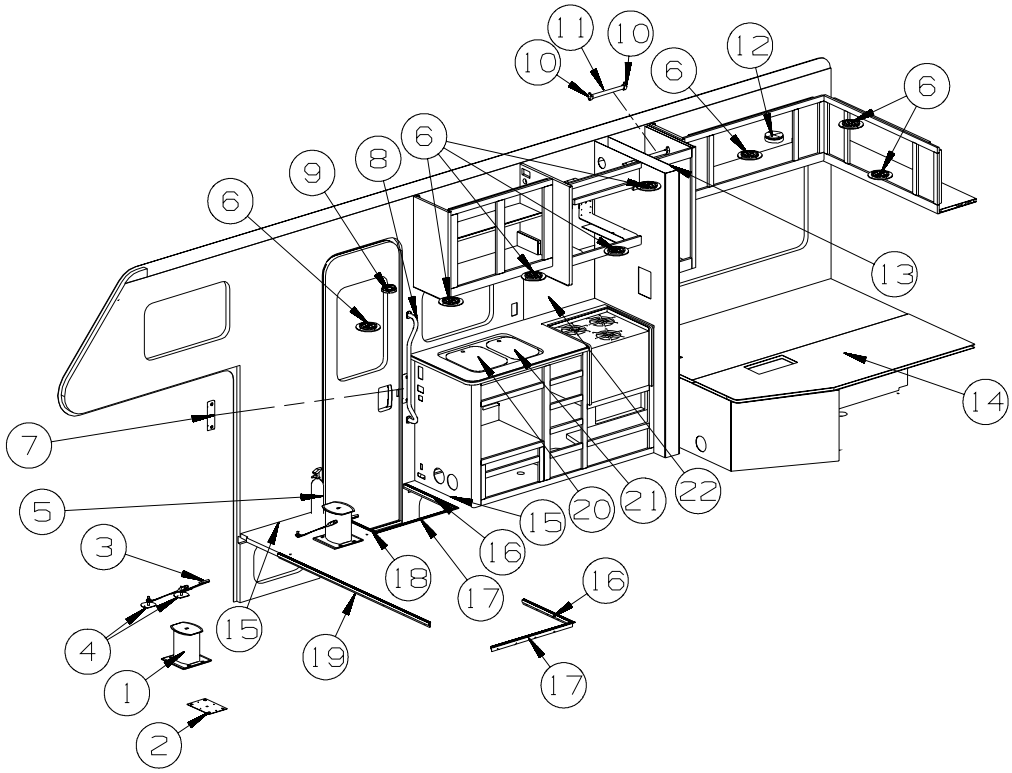

KEY	PART NUMBER	U/M	DESCRIPTION
1	133408-01-000	EA	PEDESTAL - SEAT - DRIVER/PASSENGER - 9 3/4"
2	142169-02-02B	EA	PLATE - PEDESTAL SEAT - E-COATED
3	160167-02-01A	EA	SEAT BELT - 2" X 90" - BLACK
4	150283-06-02B	EA	PLATE/WASHER - SEAT BELT - W/BOLT - E-COAT
5	094499-06-000	EA	EXTINGUISHER/FIRE - DRY - 10BC - W/BRACKET - UL/ULC - WHT
6	120134-01-02A	EA	REGISTER - W/DAMPER - 4" PIPE/6.4" O.D. FACE - WHITE
7	148362-01-02A	EA	COVER - BRACKET/STRIKE - MEDIUM OAK
	140151-02-03A	EA	COVER - SCREW - MEDIUM OAK
8	137605-02-01A	EA	HAND RAIL - INTERIOR ENTRY DOOR - BLACK
9	172965-01-000	EA	DETECTOR - SMOKE - W/9 VOLT BATTERY - US
9	172965-02-000	EA	DETECTOR - SMOKE - W/9 VOLT BATTERY - CANADIAN - 265
10	152301-01-01A	EA	FLANGE - PLASTIC - 1" CLOTHES ROD HOLDER - WHITE
11	Y00136-21-218	EA	DOWEL - WOOD - CLOTHES ROD - 1"DIAMETER X 4'
12	125136-02-000	EA	DETECTOR/CO - GAS MODEL - 9 VOLT
13	105450-02-01A	EA	TRACK - CURTAIN - 48" - OFF WHITE
	009702-01-000	EA	END STOP - CURTAIN CARRIER - L ROD
14	158822-02-000	EA	MATTRESS - INNERSPRING - 60"X 74"-NON QUILTED-W/CUT CORNER
15	M09471-79-SA3	EA	MOLDING - TRIM/COVE - .8" X .8" X 96" - SIERRA MAPLE
16	139955-16-01A	EA	TRIM - STEP/ENTRY - 21.7" - MILL
16	139955-05-01A	EA	TRIM - STEP/ENTRY - 20.9" - MILL - 54Q FROM: 00-00-00 THRU: 10-05-08
16	139955-16-01A	EA	TRIM - STEP/ENTRY - 21.7" - MILL - 54Q FROM: 10-06-08 THRU: 99-99-99
17	139955-17-01A	EA	TRIM - STEP/ENTRY - 28" - MILL
17	139955-02-01A	EA	TRIM - STEP/ENTRY - 27.7" - MILL - 54Q
18	139955-15-01A	EA	TRIM - STEP/ENTRY - 21.7" - MILL
19	139955-18-03A	EA	TRIM - STEP/ENTRY - 62.3" - TITANIUM
20	162616-05-01A	EA	COVER/SINK - LARGE - PEARL GRAY - 086
21	162616-06-01A	EA	COVER/SINK - SMALL - PEARL GRAY - 086
22	168047-04-01A	EA	BACKSPLASH - 15" X 24" - STAINLESS STEEL - 086

COPYRIGHT © 2009 WINNEBAGO INDUSTRIES INC.

INTERIOR FINISH GROUP (CONTINUED)

INTERIOR TRIM LAYOUT (CONTINUED)

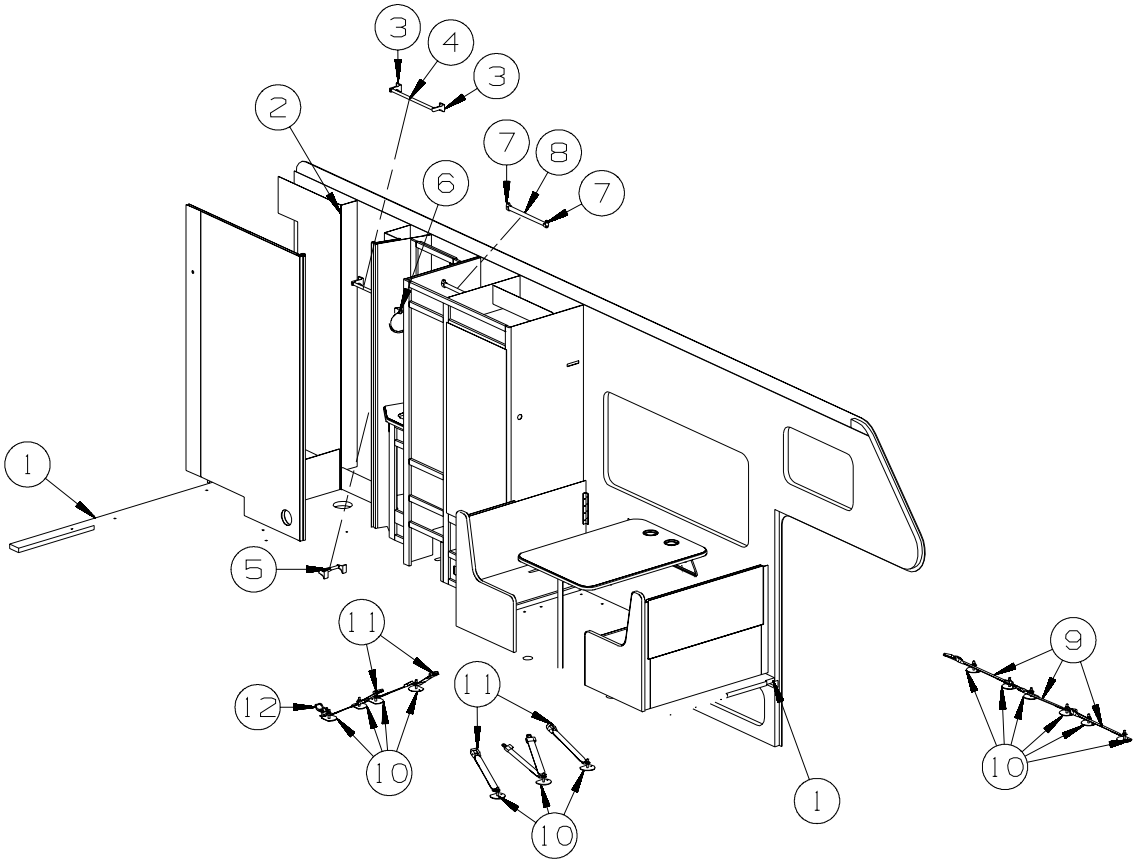

KEY	PART NUMBER	U/M	DESCRIPTION
1	M09471-79-SA3	EA	MOLDING - TRIM/COVE - .8" X .8" X 96" - SIERRA MAPLE
2	151578-01-02A	EA	DOOR - SHOWER - 36.3" X 61.9" - WHT OPAQUE SCREEN/WHITE
3	163599-02-01A	EA	POST - TOWEL BAR - CHROME
4	163599-01-01A	EA	TOWEL BAR - 18" - W/O POSTS - CHROME
5	163602-01-01A	EA	HOLDER - TOILET TISSUE - SURFACE MOUNT - CHROME
6	163601-01-01A	EA	TOWEL RING - CHROME
7	152301-01-01A	EA	FLANGE - PLASTIC - 1" CLOTHES ROD HOLDER - WHITE
8	Y00136-21-218	EA	DOWEL - WOOD - CLOTHES ROD - 1"DIAMETER X 4'
9	160167-01-01A	EA	SEAT BELT - 2" X 102" - BLACK - 10M
10	150283-06-02B	EA	PLATE/WASHER - SEAT BELT - W/BOLT - E-COAT
11	160167-02-01A	EA	SEAT BELT - 2" X 90" - BLACK
12	150697-01-02B	EA	BRACKET - RESTRAINT/CHILD - E-COATED

COPYRIGHT © 2009 WINNEBAGO INDUSTRIES INC.

INTERIOR FINISH GROUP (CONTINUED)

FLOOR COVERINGS

KEY	PART NUMBER	U/M	DESCRIPTION
	042720-38-000	SY	VINYL - FLOOR COVERING - 8' WIDE - BRIDGEWAY
	075233-01-000	SY	PAD - CARPET - 3/8" X 6'W ROLL - SOLD BY THE SQUARE YARD
	089275-02-000	FT	STRIP - 3/4" X 84" BLACK POLYETHYLENE
	093486-01-000	SY	CARPET - COMPARTMENT - 72" WIDE - DARK GRAY
	152251-05-02A	SY	CARPET - 4 SQUARE YARD INCREMENTS - BURLWOOD (Y01)
	152251-05-08A	SY	CARPET - 4 SQUARE YARD INCREMENTS - CORDWOOD (Y02)
	152251-05-06A	SY	CARPET - 4 SQUARE YARD INCREMENTS - CAST IRON (Y03)

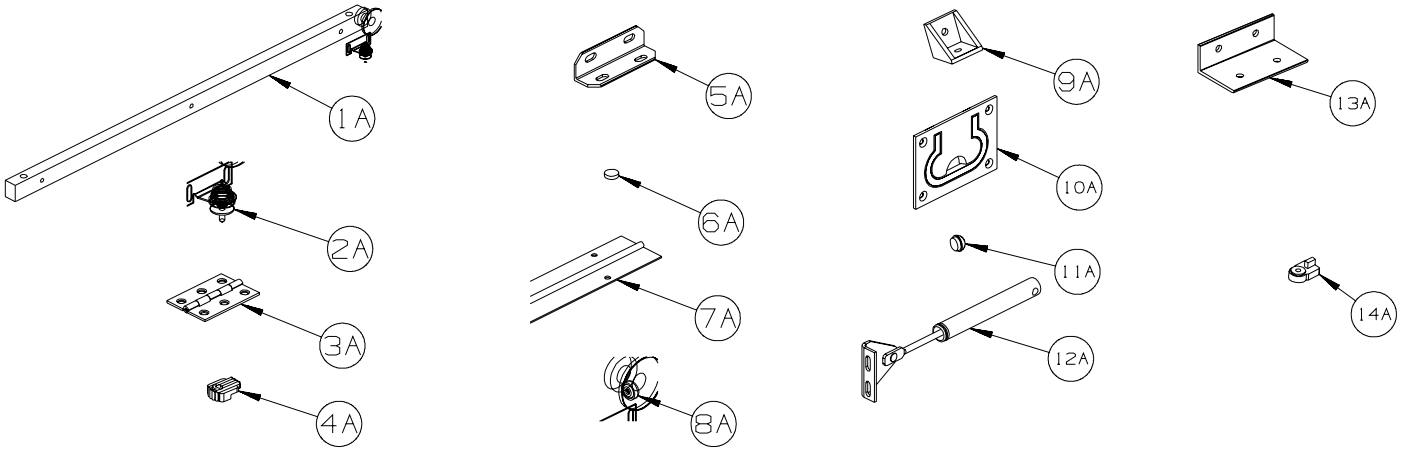

HARDWARE

KEY	PART NUMBER	U/M	DESCRIPTION
1A	P34509-01-P14	EA	RAIL END - RH/LH - TOWEL RACK - CONCERT CHERRY
1A	P34509-01-J70	EA	RAIL END - RH/LH - TOWEL RACK - WASHED MAPLE
1A	P34509-01-RE0	EA	RAIL END - RH/LH - TOWEL RACK - HONEY CHERRY
1A	P34509-01-SA3	EA	RAIL END - RH/LH - TOWEL RACK - SIERRA MAPLE
2A	009013-01-000	EA	CATCH - BULLDOG - MALE/FEMALE
3A	009059-03-000	EA	HINGE - BRASS - 1.75"
3A	009059-04-000	EA	HINGE - 2" - ZINC
4A	009089-01-000	EA	CLIP - MIRROR
5A	016604-01-000	EA	BRACE - ANGLE - 2 1/2" - UNPAINTED METAL
5A	016604-05-000	EA	BRACE - ANGLE - 2 1/2" - OFF WHITE METAL
5A	016604-10-000	EA	BRACE - ANGLE - 2 1/2" - BLACK
6A	023320-01-000	EA	PAD - FELT 3/8" DIAMETER - ADHESIVE BACK - BROWN
6A	167370-01-01A	EA	PAD - FELT 1/2" DIAMETER - ADHESIVE BACK - GRAY
7A	041389-19-000	EA	HINGE - PIANO - 1 1/2" X 71.9" - UNPAINTED
7A	041389-25-000	EA	HINGE - PIANO - 1 1/2" X 55" - UNPAINTED
7A	041389-32-000	EA	HINGE - PIANO - 68" - OFF WHITE
8A	166569-01-01A	EA	COVER - SCREW - #8 - ANTIQUE WHITE
8A	166569-01-02A	EA	COVER - SCREW - #8 - BRIGHT WHITE
8A	166569-01-03A	EA	COVER - SCREW - #8 - SOFT WHITE
8A	166569-01-04A	EA	COVER - SCREW - #8 - CREAM
8A	166569-01-05A	EA	COVER - SCREW - #8 - BLACK
9A	065740-01-000	EA	BRACE - CABINET/CORNER - PLASTIC
10A	072871-01-000	EA	PULL - FLUSH - CHROME
11A	074045-08-000	EA	PLUG - 3/8" DOWEL-1/2" HEAD - OAK/SALEM CHERRY - CONCERT CHERRY
11A	074045-12-000	EA	PLUG - 3/8" DOWEL-1/2" HEAD - WASHED MAPLE
11A	074045-14-000	EA	PLUG - 3/8" DOWEL-1/2" HEAD - HONEY CHERRY
11A	074045-15-000	EA	PLUG - 3/8" DOWEL-1/2" HEAD - SIERRA MAPLE
11A	074045-16-000	EA	PLUG - 3/8" DOWEL-1/2" HEAD - BELMONT MAPLE
12A	074493-02-000	EA	SUPPORT/PISTON SPRING - CABINET DOOR - 26 LBS
12A	074493-03-000	EA	SUPPORT/PISTON SPRING - CABINET DOOR - 12 LBS
13A	156732-01-01A	EA	BRACE - ANGLE - 2.5" - MILL
13A	156732-01-02A	EA	BRACE - ANGLE - 2.5" - OFF WHITE
13A	156732-03-01A	EA	BRACE - ANGLE - BLACK
14A	083204-03-000	EA	BUTTON - RETAINING MIRROR 5/16" TIP

COPYRIGHT © 2009 WINNEBAGO INDUSTRIES INC.

INTERIOR FINISH GROUP (CONTINUED)

HARDWARE (CONTINUED)

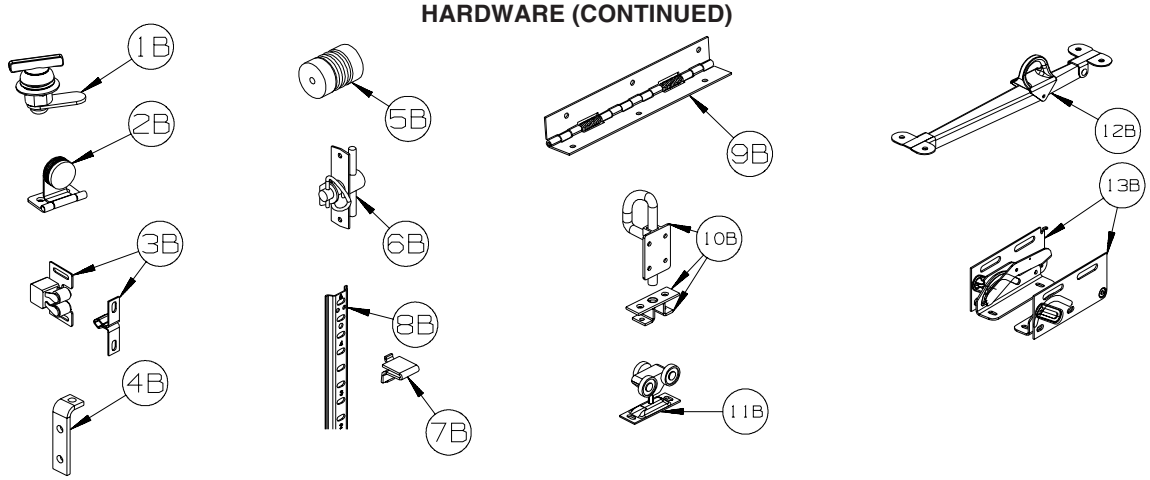

KEY	PART NUMBER	U/M	DESCRIPTION
1B	100710-01-02A	EA	LOCK - GLASS DOOR/TWIST TYPE - NICKEL
2B	100711-01-02A	EA	HINGE - GLASS DOOR - BLACK
3B	093586-06-000	EA	CATCH - W/STRIKE - SPRING ROLLER .236"/SPRINT STEEL .943"
4B	096826-01-01A	EA	BRACE - CABINET - 2” - E-COATED
4B	096826-02-01A	EA	BRACE - CABINET - 1” - E-COATED
5B	097872-04-000	EA	DOWEL - WOOD - 1" DIAMETER X 1.38" LONG - UNFINISHED
6B	098196-01-000	EA	LATCH - 1/4 TURN - T-BAR
7B	098979-01-000	EA	CLIP - ADJUSTABLE SHELF
8B	098980-01-000	EA	PILASTER - ADJUSTABLE SHELF - 18"
8B	098980-02-000	EA	PILASTER - ADJUSTABLE SHELF - 12"
8B	098980-03-000	EA	PILASTER - ADJUSTABLE SHELF - 9"
8B	098980-04-000	EA	PILASTER - ADJUSTABLE SHELF - 48"
8B	098980-05-000	EA	PILASTER - ADJUSTABLE SHELF - 15"
8B	098980-06-000	EA	PILASTER - ADJUSTABLE SHELF - 24"
9B	102920-01-02A	EA	HINGE - SPRING LOADED - NICKEL
9B	129753-01-01A	EA	HINGE - SPRING LOADED - 19" X 19" - BLACK
10B	103256-01-000	EA	LATCH COMPLETE (SLIDE)
11B	103874-01-000	EA	HANGER - SLIDING DOOR
12B	104181-01-01A	EA	SUPPORT - LEAF 5.3" EXTENDS TO 7.5" - SAFETY RING - METAL
13B	108126-01-000	EA	TRAY HINGE SET (QTY. 2 PER SET)

COPYRIGHT © 2009 WINNEBAGO INDUSTRIES INC.

INTERIOR FINISH GROUP (CONTINUED)

HARDWARE (CONTINUED)

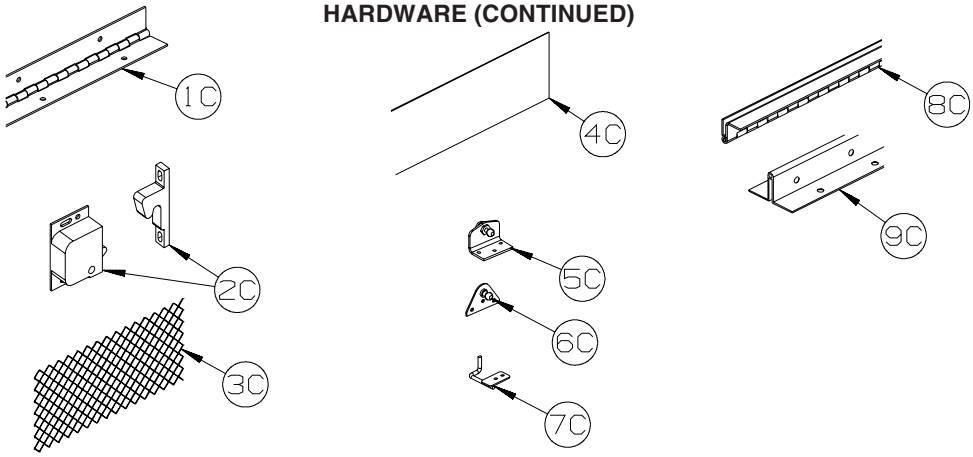

KEY	PART NUMBER	U/M	DESCRIPTION
1C	110496-01-02A	EA	HINGE - NICKEL - 2” X 32”
1C	110496-06-02A	EA	HINGE - NICKEL - 2" X 9.5"
1C	158921-01-04B	EA	HINGE - PIANO - TRUNK DOOR - 2" X 21.9" - BLACK
2C	117095-02-01A	EA	LATCH - DOOR - GRABBER W/KEEPER - BLACK - 10 LB PULL
2C	117095-03-01A	EA	LATCH - DOOR - GRABBER W/KEEPER - PLASTIC - BLK-15 LB PULL
3C	118200-01-01A	SF	MESH - PLASTIC 1/2" - 48" X LENGTH = SF - BLACK
4C	122717-06-01A	FT	PAD - NON-SKID - PSA - 5"W
5C	126263-02-02B	EA	BRACKET - GAS SPRING W/BALL STUD - E-COATED
5C	126263-06-02B	EA	BRACKET - GAS SPRING W/INSIDE BALL STUD - E-COATED
6C	126263-05-02B	EA	BRACKET - GAS SPRING W/BALL STUD - E-COATED
6C	126263-08-02B	EA	BRACKET - GAS SPRING W/CENTERED BALL STUD - E-COATED
7C	130798-01-02B	EA	GUIDE - POCKET DOOR - E-COATED
8C	134099-01-02A	EA	HINGE - PIANO - WRAP AROUND - 15.7" - NICKEL PLATED
9C	135538-03-02A	EA	HINGE - PIANO - FULL WRAP - 15.7" - CHROME

COPYRIGHT © 2009 WINNEBAGO INDUSTRIES INC.

INTERIOR FINISH GROUP (CONTINUED)

HARDWARE (CONTINUED)

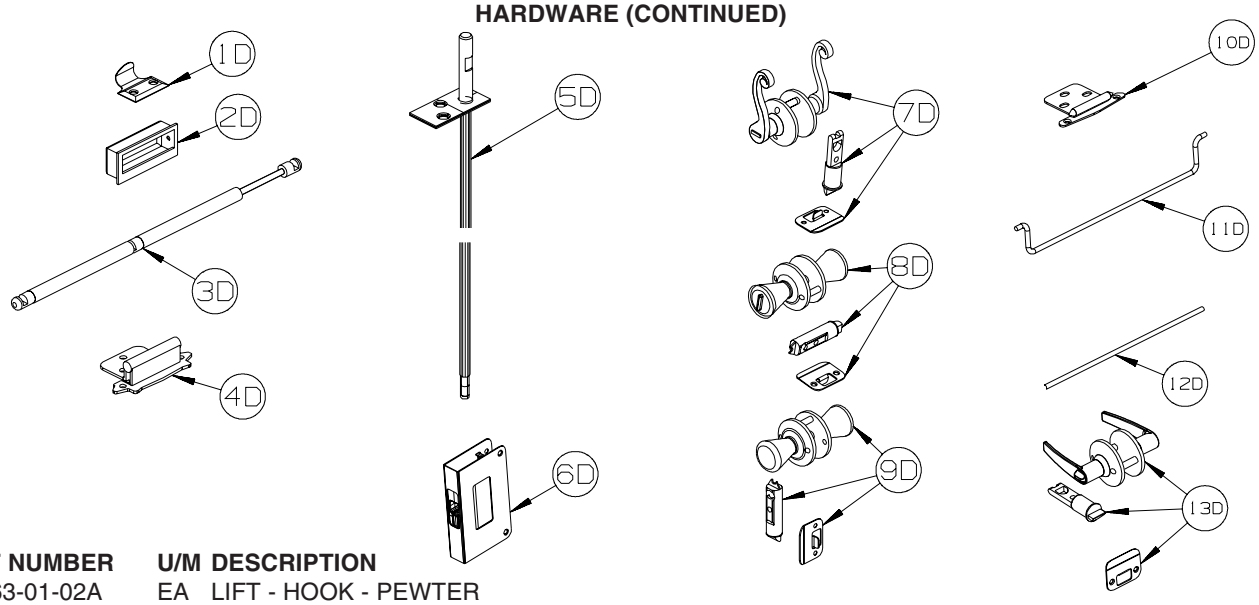

KEY	PART NUMBER	U/M	DESCRIPTION
1D	137463-01-02A	EA	LIFT - HOOK - PEWTER
2D	139136-02-02A	EA	HANDLE - .35” RECESSED - PEWTER
3D	142569-07-000	EA	SPRING/GAS - 20 LB - 20" EXTENDED/12" COMPRESSED
3D	142569-15-000	EA	SPRING/GAS - 120 LB - 20" EXTENDED/12" COMPRESSED
3D	142569-16-000	EA	SPRING/GAS - 90 LB - 20" EXTENDED/12" COMPRESSED
3D	142569-29-000	EA	SPRING/GAS - 20 LB - 9.9" EXTENDED/5.9" COMPRESSED
3D	142569-31-000	EA	SPRING/GAS - 30 LB - 11.8" EXTENDED/7.3" COMPRESSED
4D	143468-02-03A	EA	HINGE - SELF CLOSING - SATIN NICKEL
4D	143468-02-04A	EA	HINGE - SELF CLOSING - OIL RUBBED BRONZE
5D	145939-05-02A	EA	ROD/LATCH - AISLE DOOR - NICKEL
6D	145939-04-02A	EA	LATCH/SLIDE - AISLE DOOR(1" THICK DOOR)-NICKEL/BLACK SLIDE
6D	145939-04-03A	EA	LATCH/SLIDE - AISLE DOOR(1" THICK DOOR)-OIL RUBBED BRONZE
7D	146064-01-02A	EA	LOCK/PRIVACY (LOCKING) LEVER STYLE - SATIN PEWTER
7D	146064-02-02A	EA	LOCK/PASSAGE (NON LOCKING) LEVER STYLE - PEWTER
8D	146064-05-01A	EA	LOCK/PRIVACY (LOCKING) “TULIP” STYLE KNOB - SATIN NICKEL
9D	146064-06-01A	EA	LOCK/PASSAGE (NON LOCKING) “TULIP” STYLE KNOB-SATIN NICKEL
10D	146553-01-03A	EA	HINGE - CABINET DOOR - SATIN NICKEL
11D	146801-01-02A	EA	ROD/TOWEL BAR (OFFSET) - PEWTER
12D	146840-03-02A	EA	ROD - .25" X 11.7" - PEWTER
12D	146840-04-02A	EA	ROD - .25" X 13.1" - PEWTER
13D	146064-08-01A	EA	LOCK/PASSAGE (NON LOCKING) LEVER STYLE - SATIN NICKEL
13D	146064-07-01A	EA	LOCK/PRIVACY (LOCKING) LEVER STYLE - SATIN NICKEL

COPYRIGHT © 2009 WINNEBAGO INDUSTRIES INC.

INTERIOR FINISH GROUP (CONTINUED)

HARDWARE (CONTINUED)

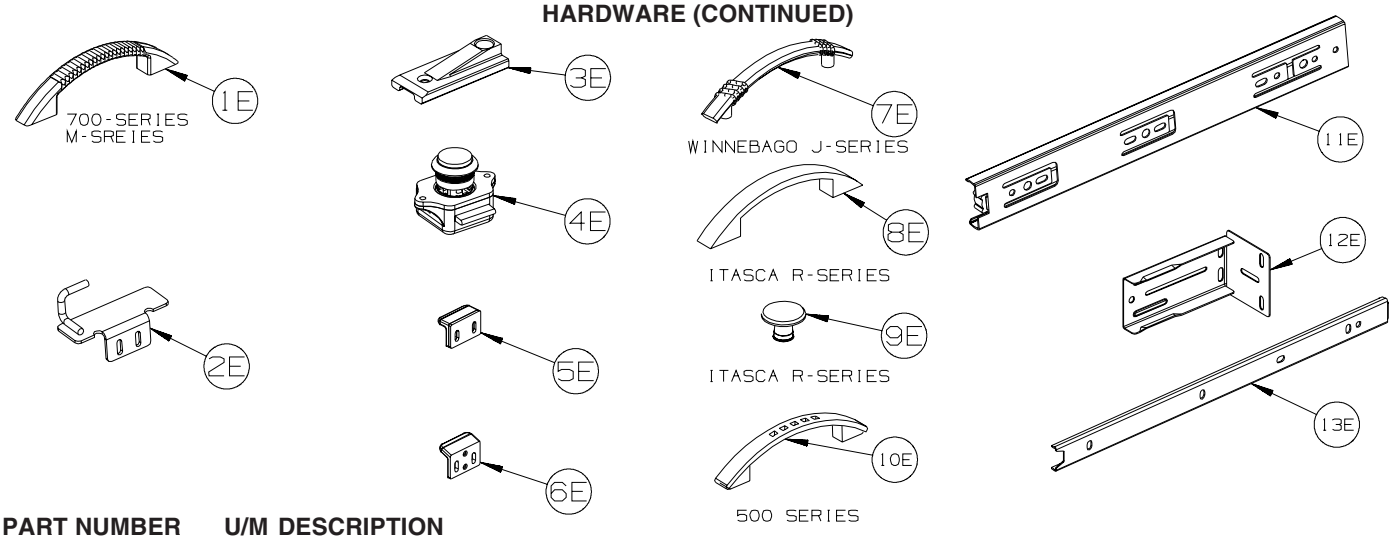

KEY	PART NUMBER	U/M	DESCRIPTION
1E	148816-01-02A	EA	PULL - CABT DR- NICKEL - ASPECT 700-SERIES, DESTINATION & LATITUDE M-SERIES TRADITIONAL
2E	149607-01-02B	EA	GUIDE - F/POCKET DOOR - 1.6” BENT ROD - E-COATED
2E	149607-03-02B	EA	GUIDE - F/POCKET DOOR - 2.9” BENT ROD - E-COATED
3E	150983-01-01A	EA	STRIKE/BLOCK - WEDGE STYLE - F/SLIDE DOOR - 3" X 1.2" - BLACK
4E	151380-01-01A	EA	LATCH - CABINET DOOR - PUSH BUTTON - SILVER
4E	151380-01-02A	EA	LATCH - CABINET DOOR - PUSH BUTTON - BLACK
5E	151380-02-01A	EA	STRIKE - CABINET DOOR LATCH - W/SPACER
6E	151380-03-01A	EA	STRIKE - CABINET DOOR LATCH - W/SPACER
7E	152302-01-01A	EA	PULL - CABINET DOOR - SATIN NICKEL - ADVENTURER J-SERIES
8E	152304-01-01A	EA	PULL - CABINET DOOR - BRONZE- ELLIPSE R-SERIES
9E	152305-01-01A	EA	KNOB - DOOR/DRAWER - BRONZE - ELLIPSE R-SERIES
10E	152950-01-01A	EA	PULL - DOOR/DRAWER - BRUSHED NICKEL - VIEW & NAVION 500-SERIES
11E	153000-01-01A	EA	SLIDE - CABINET MOUNT - 11.8"
11E	153000-03-01A	EA	SLIDE - CABINET MOUNT - 13.8"
11E	153000-05-01A	EA	SLIDE - CABINET MOUNT - 15.7"
11E	153000-07-01A	EA	SLIDE - CABINET MOUNT - 17.7"
11E	153000-09-01A	EA	SLIDE - CABINET MOUNT - 19.7"
11E	153000-11-01A	EA	SLIDE - CABINET MOUNT - 21.6"
11E	153000-14-01A	EA	SLIDE - CABINET MOUNT - 23.6"
11E	153000-16-01A	EA	SLIDE - CABINET MOUNT - 7.9"
11E	153000-18-01A	EA	SLIDE - CABINET MOUNT - 9.8"
11E	153000-20-01A	EA	SLIDE - CABINET MOUNT - 25.6"
12E	153000-13-01A	EA	BACKSOCKET - DRAWER SLIDE
13E	153000-02-01A	EA	SLIDE - DRAWER MOUNT - 11.8"
13E	153000-04-01A	EA	SLIDE - DRAWER MOUNT - 13.8"
13E	153000-06-01A	EA	SLIDE - DRAWER MOUNT - 15.7"
13E	153000-08-01A	EA	SLIDE - DRAWER MOUNT - 17.7"
13E	153000-10-01A	EA	SLIDE - DRAWER MOUNT - 19.7"
13E	153000-12-01A	EA	SLIDE - DRAWER MOUNT - 21.6"
13E	153000-15-01A	EA	SLIDE - DRAWER MOUNT - 23.4"
13E	153000-17-01A	EA	SLIDE - DRAWER MOUNT - 7.7"
13E	153000-19-01A	EA	SLIDE - DRAWER MOUNT - 9.6"
13E	153000-21-01A	EA	SLIDE - DRAWER MOUNT - 25.4"

COPYRIGHT © 2009 WINNEBAGO INDUSTRIES INC.

INTERIOR FINISH GROUP (CONTINUED)

HARDWARE (CONTINUED)

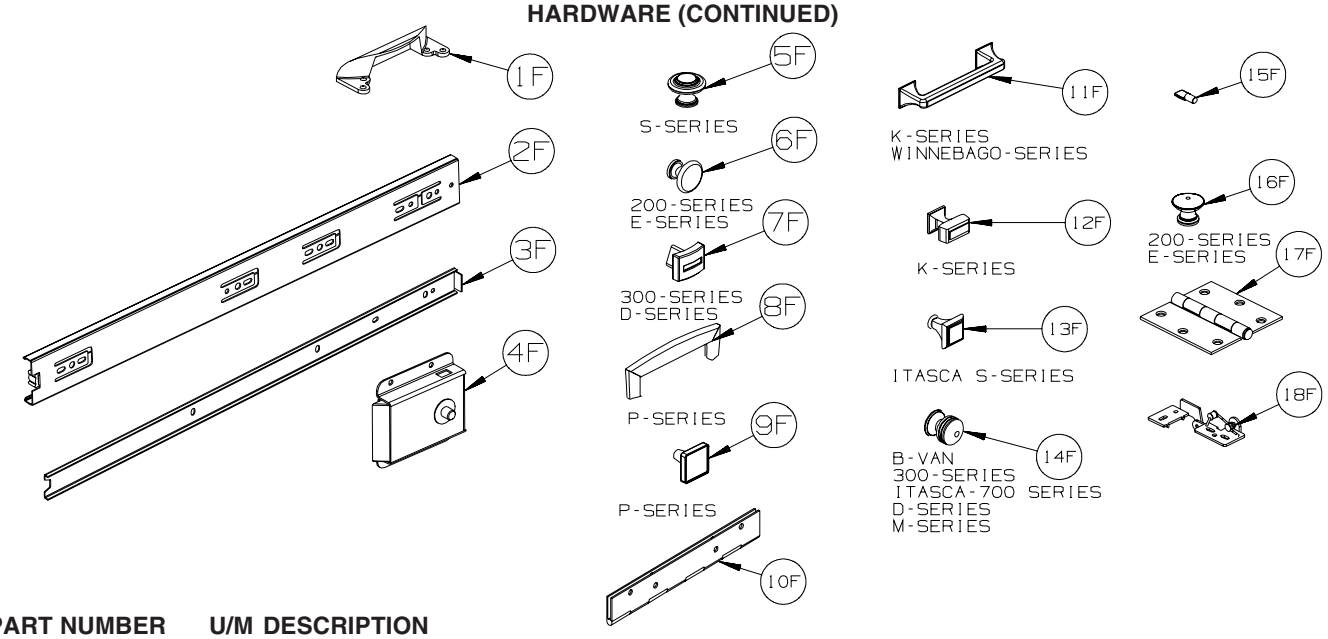

KEY	PART NUMBER	U/M	DESCRIPTION
1F	153308-01-01A	EA	PULL - VANITY STOOL - SATIN NICKEL
2F	153352-01-01A	EA	SLIDE - PANTRY - 19.7" - CABINET MOUNT
3F	153352-02-01A	EA	SLIDE - PANTRY - 19.5" - DRAWER MOUNT
4F	153353-01-01A	EA	LATCH - SLIDING/FLUSH - BLACK
5F	155803-01-01A	EA	KNOB CABINET DOOR - WROUGHT IRON - VECTRA S-SERIES
5F	155803-01-02A	EA	KNOB - CABINET DOOR - SATIN NICKEL - HORIZON S-SERIES
6F	155925-01-01A	EA	KNOB - DOOR/DRW - SATIN NICKEL - ACCESS & IMPULSE 200-SERIES/ VISTA & SUNSTAR E-SERIES
7F	156579-01-01A	EA	KNOB - DOOR/DRW - PEWTER - OUTLOOK & SPIRIT 300-SERIES/ SIGHTSEER & SUNOVA D-SERIES
8F	157246-01-01A	EA	PULL - CABINET DOOR/DRAWER - SATIN NICKEL - JOURNEY & MERIDIAN P-SERIES
9F	157246-02-01A	EA	KNOB - CABINET DOOR/DRAWER-SATIN NICKEL - JOURNEY & MERIDIAN P-SERIES
10F	158982-01-04B	EA	HINGE - CONTINUOUS - 2" X 8" - BLACK
10F	158982-01-01A	EA	HINGE - CONTINUOUS - 2" X 8" - ZINC
11F	162033-01-01A	EA	PULL - CABINET DOOR - BRUSHED NICKEL - SUNCRUISER K-SERIES, TOUR R-SERIES
12F	162033-02-01A	EA	KNOB - CABINET DOOR - BRUSHED NICKEL - SUNCRUISER K-SERIES
13F	162518-01-01A	EA	KNOB - DOOR/DRAWER - SATIN NICKEL - HORIZON S-SERIES
14F	163095-01-01A	EA	KNOB - CABINET DOOR - SATIN NICKEL - B-VAN, 300, ITASCA 700, D, M-SERIES
15F	154385-01-02A	EA	PIN - SUPPORT/GLASS DOOR - 1/4" - NICKEL
16F	165915-01-01A	EA	KNOB - DOOR/DRAWER - SATIN NICKEL - ACCESS/IMPULSE 200-SERIES, VISTA/SUNSTAR E-SERIES
17F	166114-01-01A	EA	HINGE - DOOR - 1/4" RADIUS CORNERS - SATIN NICKEL
18F	166474-01-01A	EA	HINGE - CABINET/CONCEALED - ANTIQUE BRASS
18F	166474-01-02A	EA	HINGE - CABINET/CONCEALED - CHROME

COPYRIGHT © 2009 WINNEBAGO INDUSTRIES INC.

LABELS GROUP

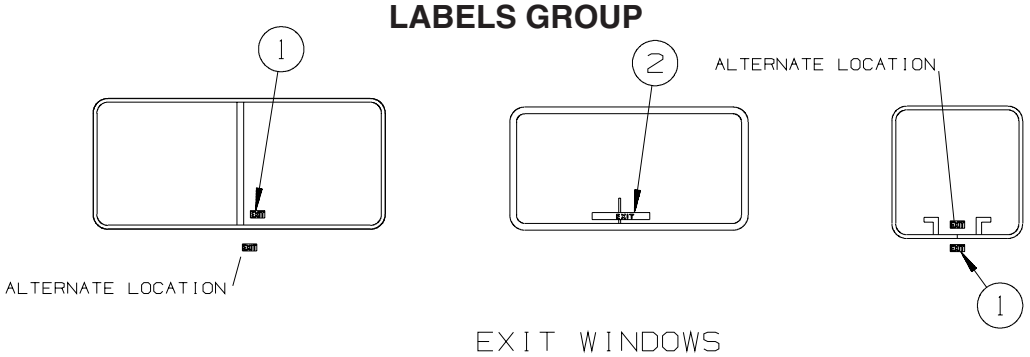

EXIT WINDOWS

KEY	PART NUMBER	U/M	DESCRIPTION
1	039290-01-000	EA	LABEL - WARNING - EXIT
2	107571-01-000	EA	LABEL - EXIT/ESCAPE WINDOW

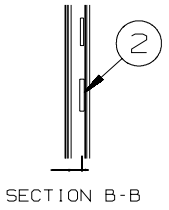

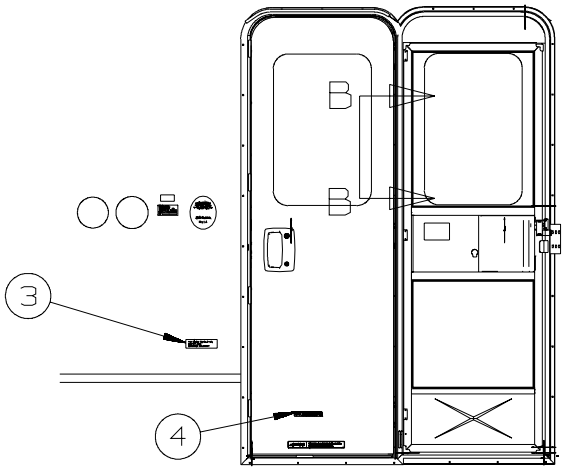

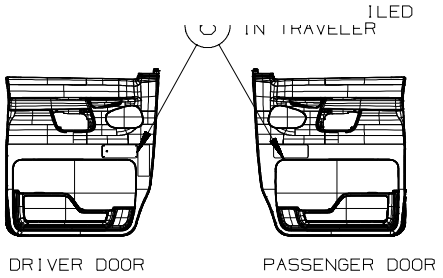

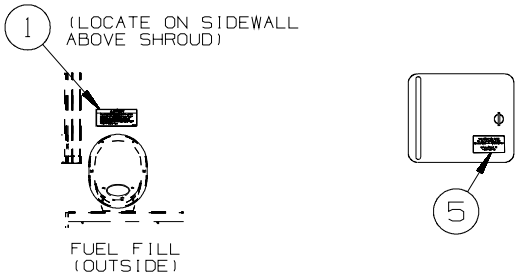

KEY	PART NUMBER	U/M	DESCRIPTION
1	124519-01-01A	EA	LABEL - WARNING/REFUELING - BLACK ON CLEAR
1	124519-02-01A	EA	LABEL - WARNING/REFUELING - BLACK ON CLEAR - CSA - 265 OR 27E
2	135869-01-01A	EA	LABEL - MERCURY CONTENT - BLACK ON CLEAR
3	099509-01-000	EA	LABEL - AWNING INSTALLATION
4	065748-01-000	EA	LABEL - NOTICE - BATTERY CHARGING - UL
5	125306-04-01A	EA	LABEL - ELECTRICAL ENTRANCE-120/20V 50 AMP-BLACK ON CLEAR
6	168454-01-01A	EA	LABEL - OCCUPANT/CCC - BLACK ON YELLOW

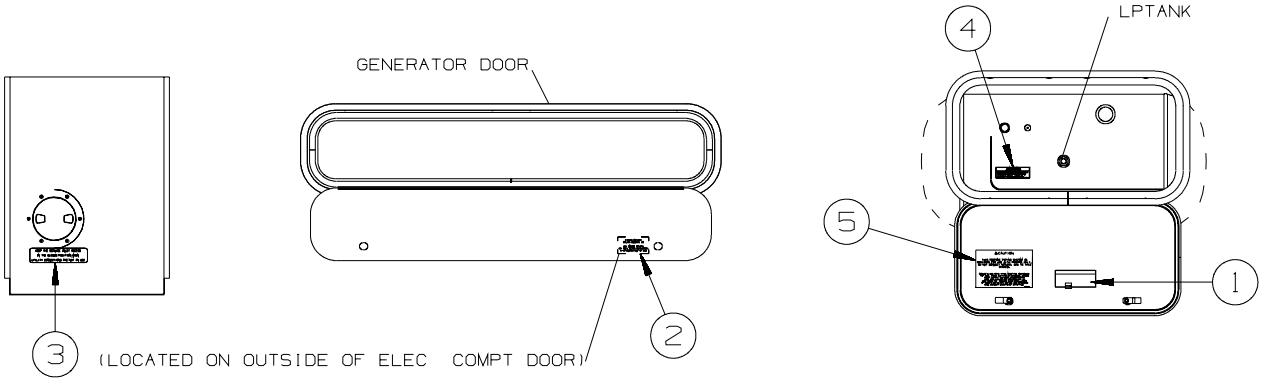

KEY	PART NUMBER	U/M	DESCRIPTION
1	124519-01-01A	EA	LABEL - WARNING/REFUELING - BLACK ON CLEAR
1	124519-02-01A	EA	LABEL - WARNING/REFUELING - BLACK ON CLEAR - CSA - 265 OR 27E
2	125306-01-01A	EA	LABEL - ELECTRICAL ENTRANCE - 110V 30 AMP - BLACK ON CLEAR
3	123562-01-000	EA	LABEL - SERVICE/UTILITY ACCESS
4	079965-01-000	EA	LABEL - LPG - 80% CAPACITY
5	124520-01-01A	EA	LABEL - LP GAS ONLY - BLACK ON CLEAR
5	023769-01-000	EA	LABEL - WARNING - LPG - CANADIAN - 265

COPYRIGHT © 2009 WINNEBAGO INDUSTRIES INC.

LABELS GROUP (CONTINUED)

LABELS SHALL BE LOCATED ON OPPOSITE SIDE OF VISOR THAT THE AIR BAG LABEL IS INSTALLED ON.

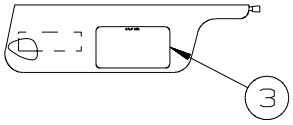

INSTRUMENT CLUSTER

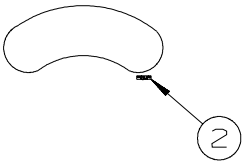

TYPICAL SEAT AND BELT CONFIGURATIONS

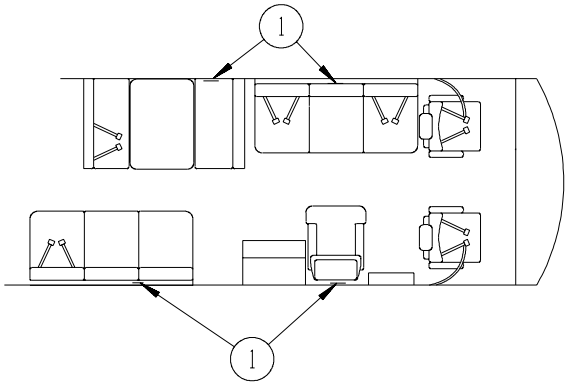

ATTACH LABEL ON OR NEXT TO:
+ANY SINGLE CHAIR WITHOUT BELTS.
+ANY DINETTE SEAT WITHOUT BELTS.
+ANY COUCH WITHOUT BELTS OR ANY SEATING POSITION ON THAT COUCH.

DO NOT ATTACH LABEL IF:
+DINETTE SEAT HAS AT LEAST ONE SET OF BELTS INSTALLED.

KEY	PART NUMBER	U/M	DESCRIPTION
1	134538-01-01A	EA	LABEL - OCCUPANCY - NO SEAT BELT - BLACK ON CLEAR - US
1	134538-02-01A	EA	LABEL - OCCUPANCY - NO SEAT BELT - BLACK ON CLEAR - CSA - 265 OR 27E
2	155692-01-02A	EA	LABEL - ODOMETER - READ IN MILE - WHITE/CLEAR - 265 OR 27E
3	056259-01-000	EA	LABEL - SAFETY CHECK LIST

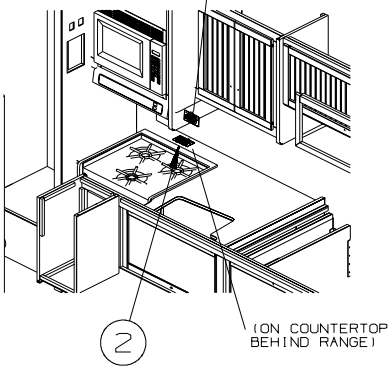

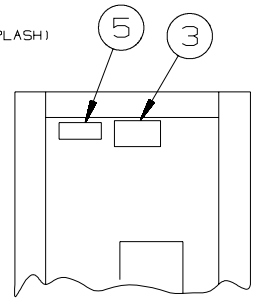

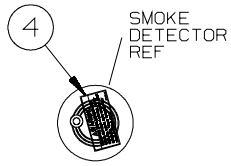

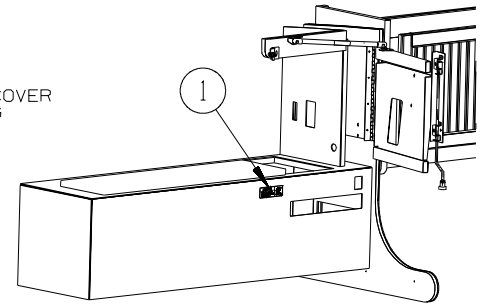

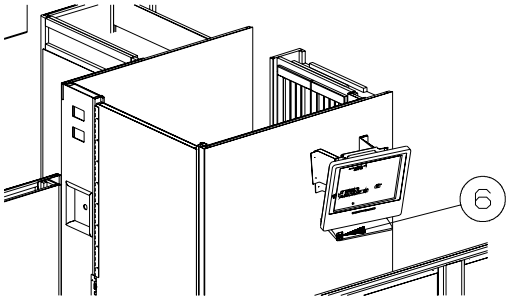

KEY	PART NUMBER	U/M	DESCRIPTION
1	159837-01-01A	EA	LABEL - CAUTION - SWINGOUT TV - BLACK/CLEAR/RED
2	134539-01-01A	EA	LABEL - WARNING - STOVE/HEATING - US - BLACK ON CLEAR
2	134540-01-01A	EA	LABEL - WARNING - STOVE/HEATING - CSA - BLACK ON CLEAR - 265
3	073998-01-000	EA	LABEL - LPG/ODOR WARNING
4	077956-01-000	EA	LABEL - WARNING/SMOKE DETECTOR
5	099689-01-000	EA	LABEL - WARNING - CANCER/TOXICITY - CALIFORNIA ONLY
6	159837-02-01A	EA	LABEL - RELEASE/TV - BLACK/CLEAR/RED - 1LK OR 1LY

COPYRIGHT © 2009 WINNEBAGO INDUSTRIES INC.

LABELS GROUP (CONTINUED)

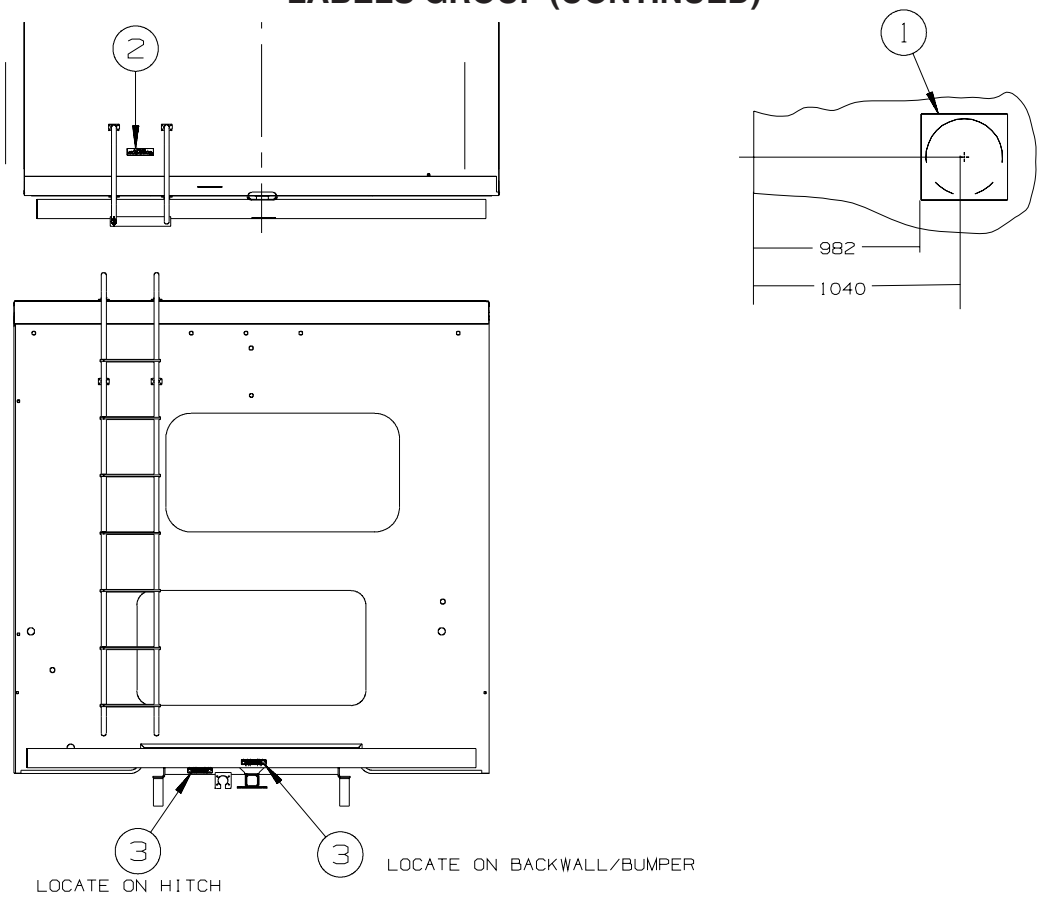

KEY	PART NUMBER	U/M	DESCRIPTION
1	120431-01-000	EA	LABEL - LOCATION - COAXIAL CABLE/SATELLITE ANTENNA
2	163705-01-01A	EA	LABEL - WARNING - ROOF SLIPPERY - BLACK ON WHITE
3	129669-01-01A	EA	LABEL - HITCH/VEHICLE RATE - 350 - WHITE ON CLEAR
3	129669-01-02A	EA	LABEL - HITCH/VEHICLE RATE - 350 - BLACK ON CLEAR

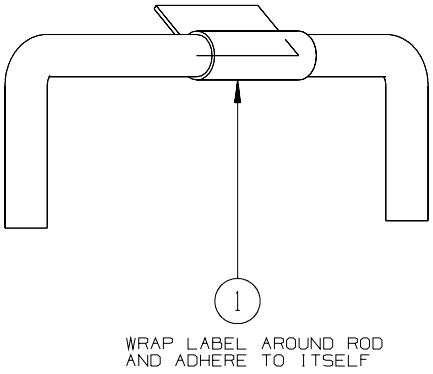

KEY	PART NUMBER	U/M	DESCRIPTION
1	128658-01-000	EA	LABEL - PROP ROD - ENTRY DOOR

COPYRIGHT © 2009 WINNEBAGO INDUSTRIES INC.

LABELS GROUP (CONTINUED)

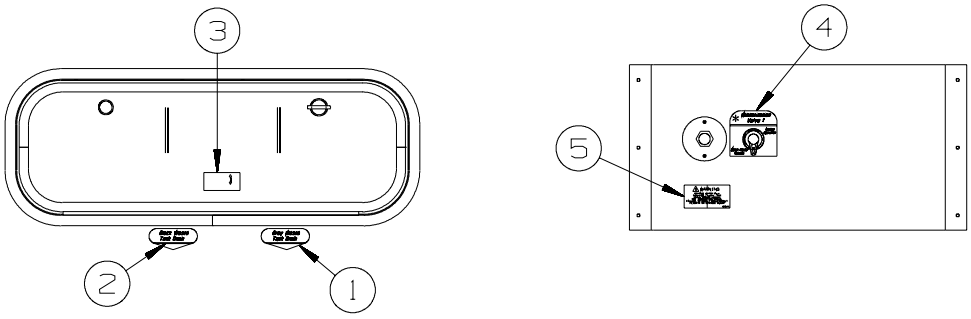

KEY	PART NUMBER	U/M	DESCRIPTION
1	152541-03-01A	EA	LABEL - GRAY WASTE
2	152543-03-01A	EA	LABEL - BLACK WASTE
3	144649-01-01A	EA	LABEL - ADJUSTABLE VALVE - WHITE ON CLEAR
4	152539-01-01A	EA	LABEL - BYPASS
			FROM: 00-00-00 THRU: 08-03-08
4	152548-03-01A	EA	LABEL - VALVE/FRESH - NOT ILLUSTRATED
			FROM: 08-04-08 THRU: 99-99-99
5	128725-02-01A	EA	LABEL - POTABLE WATER ONLY - BLACK ON CLEAR

COPYRIGHT © 2009 WINNEBAGO INDUSTRIES INC.

LP GROUP

LP SYSTEM

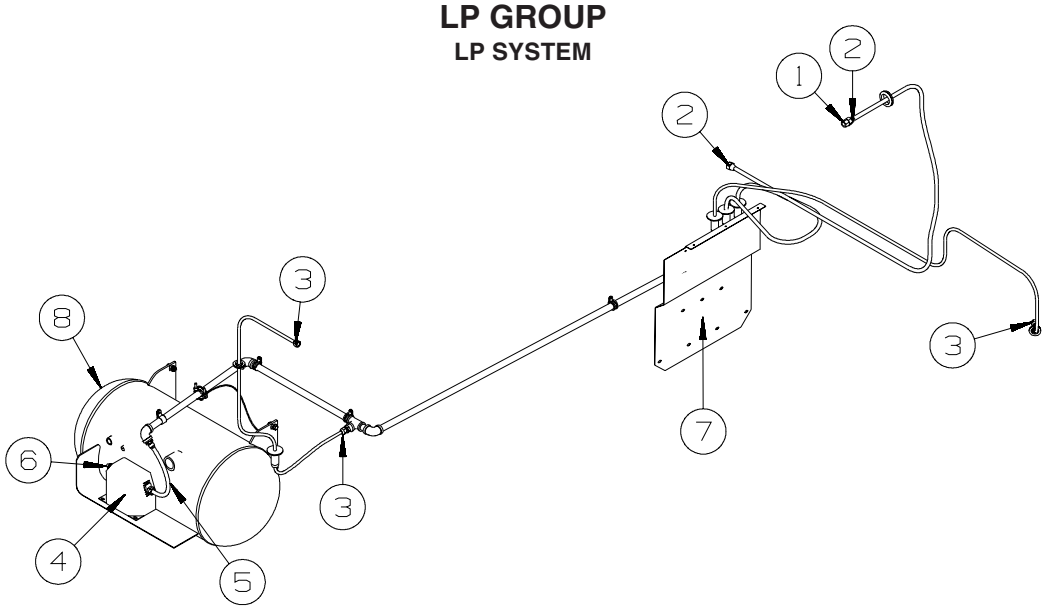

KEY	PART NUMBER	U/M	DESCRIPTION
1	010326-01-000	EA	ADAPTER - FLARE - W/CONE GASKET - 3/8"F X 1/2"F
2	010380-02-000	EA	NUT - 1/2" FLARE - FORGED - BRASS
3	010377-02-000	EA	NUT - 3/8" FLARE - FORGED - BRASS
4	144485-01-000	EA	COVER - LP REGULATOR
5	045703-05-000	EA	HOSE - LP - 3/8"ID X 28" - 3/8"MPT X 1/2"F SWIVEL - US
5	045703-06-000	EA	HOSE - LP - 3/8"ID X 28" - 3/8"MPT X 1/2"F SWIVEL - CSA - 265
6	106150-05-000	EA	REGULATOR - TWO STAGE
7	137828-01-02B	EA	PANEL - ROCKGUARD/LP - E-COATED
8*	144116-04-000	EA	TANK - LP - 60 LB - 14"D X 29.75"L
	040440-02-000	EA	TRANSMITTER - DIAL/BOLT-ON - 0-90 OHM 2 TERM(POWER/GROUND)

***COMPONENT PARTS LISTED LATER IN THIS GROUP**

COMPONENT PARTS FOR LP SYSTEM

144116-04-000

KEY	PART NUMBER	U/M	DESCRIPTION	VENDOR NO.
	040421-01-712	EA	VALVE-SERV. W/O VAPOR RELIEF	V20373/V21202
	040421-01-713	EA	VALVE-RELIEF 1" W/SPRING 7"	V12560/V21207
	144116-01-700	EA	VALVE-OUTAGE(NO STEM REMOVE)	V20058
	144116-01-701	EA	VALVE/FILL 80 % W/YELLOW CAP	V13414
	144116-04-700	EA	FLOAT/SENDING UNIT W/O DIAL	G11530
	144116-04-701	EA	DIAL - TRANSMITER	G12845

COPYRIGHT © 2009 WINNEBAGO INDUSTRIES INC.

SEALANTS & FASTENERS GROUP

SEALANTS & ADHESIVES

KEY	PART NUMBER	U/M	DESCRIPTION
	010405-02-000	EA	TAPE - THREAD SEALING - 3/8"
	064075-07-000	FT	SEAL - BULB - W/WIRED U CHANNEL - .3" X .5" CHANNEL-BLACK
	067788-01-000	EA	ADHESIVE - SPRAY - 3M - 19.5 OZ AEROSOL CAN
	069640-01-000	FT	SEALER - RIBBON - 1/4"DIAMETER X 30 FT - BLACK OR GRAY
	069640-02-000	FT	SEALER - TAPE - 1/8"THICK X 1/2"WIDE X 60 FT - GRAY
	069640-03-000	FT	SEALER - TAPE - 1/8"THICK X 3/4"WIDE X 60 FT - BLACK
	069640-07-000	FT	SEALER - TAPE - 3/32"THICK X 2"WIDE X 45 FT - GRAY
	069640-09-000	FT	SEALER - TAPE - 1/32"THICK X 2 1/2"WIDE X 80 FT - BRT WHT
	069640-10-000	FT	SEALER - TAPE - 1/32"THICK X 1 1/2"WIDE X 90 FT - GRAY
	069640-11-000	FT	SEALER - TAPE - 3/16"THICK X 3/8"WIDE X 40 FT - BLACK
	069640-13-000	FT	SEALER - TAPE - 3/32"THICK X 2"WIDE X 45 FT - BLACK
	069640-14-000	FT	SEALER - TAPE - 1/16"THICK X 1"WIDE X 100 FT - BLACK
	069640-15-000	FT	SEALER - TAPE - 1/16"THICK X 3/8"WIDE X 100 FT - BRT WHT
	069640-17-000	FT	SEALER - TAPE - 1/32"THICK X 1"WIDE X 150 FT - GRAY
	069640-18-000	FT	SEALER - TAPE - 1/8"THICK X 1/2"WIDE X 60 FT - BRT WHT
	069640-19-000	FT	SEALER - TAPE - 1/8"THICK X 3/4"WIDE X 60 FT - BRT WHT
	069640-20-000	FT	SEALER - TAPE - 1/8"THICK X 1/2"WIDE X 60 FT - BLACK
	069640-21-000	FT	SEALER - TAPE - 1/16"THICK X 1/2"WIDE X 100 FT - BRT WHT
	069640-22-000	FT	SEALER - TAPE - 1/32"THICK X 1/4"WIDE X 200 FT - BRT WHT
	069640-23-000	FT	SEALER - TAPE - 1/16"THICK X 3/4"WIDE X 100 FT - BRT WHT
	069640-27-000	FT	SEALER - TAPE - 1/16"THICK X 2 1/4"WIDE X 50 FT - BRT WHT
	069640-28-000	FT	SEALER - TAPE - 1/32"THICK X 1 7/8"WIDE X 90 FT - GRAY
	069640-30-000	FT	SEALER - TAPE - 1/32"THICK X 5/8"WIDE X 50 FT - GRAY
	069640-31-000	FT	SEALER - TAPE - 1/4"THICK X 3/4"WIDE X 15 FT - BLACK
	069640-32-000	FT	SEALER - TAPE - 1/16"THICK X 3/8"WIDE X 100 FT - BLACK
	069640-33-000	FT	SEALER - RIBBON - 3/8"DIAMETER X 20 FT - BLACK
	069640-34-000	FT	SEALER - RIBBON - 1/4"DIAMETER X 30 FT - BRIGHT WHITE
	069640-36-000	FT	SEALER - TAPE - 1/16"THICK X 1/2"WIDE X 100 FT - BLACK
	069640-37-000	FT	SEALER - TAPE - 1/16"THICK X 3/4"WIDE X 100 FT - BLACK
	069640-38-000	FT	SEALER - TAPE - 1/16"THICK X 3/4"WIDE X 100 FT - BRT WHT
	069640-39-000	FT	SEALER - TAPE - 1/16"THICK X 3"WIDE X 50 FT - BRT WHT
	069640-40-000	FT	SEALER - TAPE - 1/16"THICK X 3"WIDE X 50 FT - BRT WHT
	072889-28-000	EA	SEALANT/URETHANE-10 OZ TUBE W/NOZZLE-SELF LEVELING-BRT WHT
	072889-31-000	EA	SEALANT/URETHANE-10 OZ TUBE W/NOZZLE-SELF LEVELING - BLACK
	076322-02-000	FT	TAPE-DOUBLE COATED/ADHESIVE BK-.05"THK X 1"W X 108' - WHT
	076322-03-000	FT	TAPE-DOUBLE COATED/ADHESIVE BK-.05"THK X .5"W X 108' - WHT
	076322-05-000	FT	TAPE-DOUBLE COATED/ADHESIVE BK-.05"THK X .8"W X 108' - WHT
	076322-07-000	FT	TAPE-DOUBLE COATED/ADHESIVE BK-.05"THK X .5"W X 200' - BLK
	076322-13-000	FT	TAPE - FOAM/DOUBLE COATED - .020"THK X .75"W - CLEAR
	076322-21-000	FT	TAPE - FOAM/DOUBLE COATED - .045"THK X .50"W
	076322-22-000	FT	TAPE - FOAM/DOUBLE COATED - .045"THK X .75"W
	076322-23-000	FT	TAPE - FOAM/DOUBLE COATED - .045"THK X 1"W
	076322-25-000	FT	TAPE - FOAM/DOUBLE COATED - .025"THK X .5"W
	086276-01-000	EA	TAPE - DOUBLE SIDED - 1/2" WIDE X 108' LONG (SOLD BY ROLL)
	088479-01-000	EA	TAPE - ALUMINUM - 3"
	090340-01-000	FT	SEAL - FOAM - CLOSED CELL - 1/4" X 1/2" X 50'
	090340-02-000	FT	SEAL - FOAM - CLOSED CELL - 3/8" X 1/2" X 50'
	091255-02-000	FT	SEAL - ADHESIVE BACKED/FOAM - 3/64"THICK X 3/16"W X 1000'
	091255-03-000	FT	SEAL - ADHESIVE BACKED/FOAM - 1/4" THICK X 1/4"W X 1000'
	094401-01-000	EA	SEALER - BODY SEAM - FLEXICLEAR
	094401-04-000	EA	SEALER - BODY SEAM - CLEAR
	094401-05-000	EA	SEALER - BODY SEAM - 20OZ BLACK
	094401-06-000	EA	SEALER - BODY SEAM - 12OZ BLACK
	094401-07-000	EA	SEALER - BODY SEAM - CLEAR
	098408-01-000	FT	SEAL - SPONGE RUBBER - CLOSED CELL
	099069-01-000	FT	SEAL - RUBBER - CLOSED SPONGE - .5" WIDE X .12" THICK-BLK
	099418-01-000	FT	SEAL - D-SECTION/ADHESIVE BACK - ..44” X .44” - BLK RUBBER
	100128-02-000	FT	SEAL - FOAM/ADHESIVE BACK - .37" WIDE X .37" THICK X 60'
	104692-01-000	FT	SEAL - ADHESIVE BACKED FOAM - 3/4" THICK X 3/4" WIDE X 25'
	107721-07-000	FT	SEAL - ACCESS DOOR - .9"WIDE X 1.1"HIGH
	112864-01-000	FT	SEAL - FOAM/BUTYL COVERED - 3/8" X 35'
	112864-02-000	FT	SEAL - FOAM/BUTYL COVERED - 5/16" X 44'
	112864-05-000	FT	SEAL - FOAM/BUTYL COVERED - 1/2" X 3/16"
	112901-02-000	EA	ADHESIVE - PLEXUS - MA330 - 50ML - GRAY

COPYRIGHT © 2009 WINNEBAGO INDUSTRIES INC.

SEALANTS & FASTENERS GROUP (CONTINUED)

SEALANTS & ADHESIVES (CONTINUED)

KEY	PART NUMBER	U/M	DESCRIPTION
	112901-03-000	EA	ADHESIVE - PLEXUS - MA300 - 50ML - WHITE
	112902-03-000	EA	MIXER NOZZLE - F/GUN #00400102000 - SCOTCH-WELD & PLEXUS
	112902-04-000	EA	NOZZLE - ELEMENT - 1/4" X 3.5"
	113452-01-000	FT	SEAL/TRIM - FRONT - VINYL W/WIRE CARRIER - .020"
	113452-02-000	FT	SEAL/TRIM - FRONT - VINYL W/WIRE CARRIER - .027"
	113366-01-000	EA	ADHESIVE - INSTANT - 1 OZ
	115870-01-000	FT	SEAL/EDGE - TRIM
	120074-02-03A	EA	SILICONE - TUBE - W/O NOZZLE - LOW ODOR - SMOKEY WHITE
	120534-01-01A	EA	TAPE - SCOTCH - 3M - 1/2" FINE LINE
	123655-01-000	FT	SEAL - CLOSED CELL/FOAM
	123816-01-000	FT	TAPE - DOUBLE SIDED - 1" X .020" X 200' - CLEAR
	123816-02-000	FT	TAPE - DOUBLE SIDED - 1/2" X .035" X 200' - CLEAR
	123816-03-000	FT	TAPE - DOUBLE SIDED - 1/2" X .020" X 200' - CLEAR
	123816-04-000	FT	TAPE - DOUBLE SIDED - 6" X .0035" X 750' - CLEAR
	123816-06-000	FT	TAPE - DOUBLE SIDED - 3/4" X 3/4" X 200' - CLEAR
	123816-07-000	FT	TAPE - DOUBLE SIDED - 1 3/4" X 200' - CLEAR
	126427-01-000	EA	ADHESIVE - ALL PURPOSE - ABS/PVC
	126427-02-000	EA	PRIMER - CLEANER - FLEX PIPING
	131264-01-12A	EA	SILICONE - TUBE - W/NOZZLE - BONE
	131264-01-13A	EA	SILICONE - TUBE - W/NOZZLE - TRANSLUCENT
	131264-03-01A	EA	SILICONE - TUBE - W/O NOZZLE - SELF LEVELING -BRIGHT WHITE
	131264-04-02A	EA	SILICONE/SEALANT/ADHESIVE-FAST CURE F/GLASS/VINYL-SOFT WHT
	131264-05-01A	EA	SILICONE/SEALANT - ODORLESS - TUBE - W/NOZZLE - BLACK
	131264-05-02A	EA	SILICONE/SEALANT - ODORLESS - TUBE - W/NOZZLE - CLEAR
	131384-01-000	EA	ADHESIVE - JET WELD - 10 OZ CARTRIDGE
	132892-07-01A	FT	SEAL - BULB/SINGLE - W/U CHANNEL - .5" X 1" - BLACK
	152038-01-01A	EA	TAPE - PRESERVATION SEAL - 2" X 36YD ROLL - BLACK
	154585-01-01A	FT	SEAL - FOAM TAPE - ADHESIVE BACK - 3/8" X 3/8" - BLACK
	154585-02-01A	FT	SEAL - FOAM TAPE - ADHESIVE BACK - 3/4" X 1/2" - BLACK
	154585-03-01A	FT	SEAL - FOAM TAPE - ADHESIVE 2 SIDED - 1/8" X 3/4" - BLACK
	154585-04-01A	FT	SEAL - FOAM TAPE - ADHESIVE BACK - 5/8" X 1/8" - WHITE
	156622-01-01A	FT	SEALER - TAPE - 1/4"THICK X 3"WIDE X 100 FT - WHITE
	156622-02-01A	FT	SEALER - TAPE - 1/4"THICK X 2"WIDE X 100 FT - WHITE

BOLTS, NUTS & WASHERS

KEY	PART NUMBER	U/M	DESCRIPTION
	0MD54F-06-000	EA	NUT - HEX W/SERATED FLANGE
	000C12-04-08B	EA	BOLT - HEX - 1/4-20 X 1/2 - GRADE #5 - ZINC
	000C12-04-12A	EA	BOLT - HEX - 1/4-20 X 3/4 - PLAIN 5
	000C12-04-40B	EA	BOLT - HEX - 1/4-20 X 2 1/2 - GRADE #5 ZINC
	000C12-05-16B	EA	BOLT - HEX - 5/16 - 18X1 - GRADE #5 - ZINC
	000C12-05-40B	EA	BOLT - HEX - 5/16"-18 X 2.5" - GRADE #5 - ZINC
	000C12-06-28B	EA	BOLT-HEX-3/8-16X13/4 ZN 5 - 5185-01
	000C12-08-24B	EA	BOLT - HEX - 1/2-13 X 1 1/2 - GRADE #5 - ZINC
	000C12-08-28B	EA	BOLT - HEX - 1/2-13 X 1 3/4 - GRADE #5 - ZINC
	000C12-08-44B	EA	BOLT - HEX - 1/2-13 X 2 3/4 - GRADE #5 - ZINC
	000C13-07-40B	EA	BOLT - HEX - 7/16-20 X 2 1/2 - GRADE #5 - ZINC
	000C13-07-48B	EA	BOLT - HEX - 7/16-20 X 3 - GRADE #5 - ZINC
	000C14-10-32B	EA	BOLT - HEX - 5/8-11 X 2.0 - GRADE #8 - ZINC
	000C18-05-40A	EA	BOLT - ELEVATOR - 5/16-18 X 2 1/2 - PL
	000C26-04-10B	EA	BOLT - HEX - SERRATED FLANGE - 1/4-20 X 5/8 - ZINC
	000C26-04-12F	EA	BOLT - HEX - SERRATED FLANGE -1/4-20 X 3/4-STAINLESS STEEL
	000C26-04-14B	EA	BOLT - HEX - SERRATED FLANGE - 1/4-20 X 7/8 - ZINC
	000C26-04-18B	EA	BOLT - HEX - SERRATED FLANGE - 1/4-20 X 1 1/8 - ZINC
	000C26-05-12B	EA	BOLT - HEX - SERRATED FLANGE - 5/16-18 X 3/4 - ZINC
	000C26-06-12B	EA	BOLT - HEX - SERRATED FLANGE - 3/8-16 X 3/4 - ZINC
	000C26-06-20B	EA	BOLT - HEX - SERRATED FLANGE - 3/8-16 X 1 1/4 - ZINC
	000C26-06-28B	EA	BOLT - HEX - SERRATED FLANGE - 3/8-16 X 1 3/4 - ZINC
	000C26-06-40B	EA	BOLT - HEX - SERRATED FLANGE - 3/8-16 X 2 1/2 - ZINC
	000C26-08-24B	EA	BOLT - HEX - SERRATED FLANGE - 1/2-13 X 1 1/2 - ZINC
	000C26-08-28B	EA	BOLT - HEX - SERRATED FLANGE - 1/2-13 X 1 3/4 - ZINC
	000C27-08-48B	EA	BOLT-CARR 1/2-13X3.00 GR5 - 97 M-SERIES
	000D24-10-00B	EA	NUT - HEX - SELF LOCKING - 10-32 - ZINC

COPYRIGHT © 2009 WINNEBAGO INDUSTRIES INC.

SEALANTS & FASTENERS GROUP (CONTINUED)

BOLTS, NUTS & WASHERS (CONTINUED)

KEY	PART NUMBER	U/M	DESCRIPTION
	000D27-05-00B	EA	NUT - HEX LOCK - 5-40 - ZINC
	000D28-10-00B	EA	NUT - HEX - W/NYLON LOCK - 10-32 - ZINC
	000D29-04-00B	EA	NUT - HEX - SELF LOCKING - 1/4 X 20 - ZINC
	000D29-04-00F	EA	NUT - HEX - SELF LOCKING - 1/4 X 20 - STAINLESS STEEL
	000D29-06-00B	EA	NUT - HEX - W/NYLON LOCK - 3/8-16 - ZINC
	000D29-09-00B	EA	NUT - HEX - SELF LOCKING - 9/16-12 - ZINC
	000D34-04-00B	EA	NUT - HEX - LOCKING - 1/4-20 - ZINC
	000D34-06-00B	EA	NUT - HEX - LOCKING - 3/8-16 GRADE C - ZINC
	000D39-04-00B	EA	NUT - HEX - LOCKING W/SERRATED FLANGE - 1/4-20 - ZINC
	000D39-05-00B	EA	NUT - HEX - LOCKING W/SERRATED FLANGE - 5/16-18 - ZINC
	000D39-06-00B	EA	NUT - HEX - LOCKING W/SERRATED FLANGE - 3/8-18 - ZINC
	000D39-06-00D	EA	NUT - HEX - LOCKING W/SERRATED FLANGE - 3/8"-16 BLACK
	000D39-07-00B	EA	NUT - HEX - LOCKING W/SERRATED FLANGE - 7/16-14 - ZINC
	000D39-08-00B	EA	NUT - HEX - LOCKING W/SERRATED FLANGE - 1/2-13 - ZINC
	000D44-07-00B	EA	NUT - HEX - LOCKING W/SERRATED FLANGE - 7/16-20 - ZINC
	000D44-08-00B	EA	NUT - HEX - LOCKING W/SERRATED FLANGE - 1/2-20 - ZINC
	000D46-04-00A	EA	NUT - HEX - WELD - 1/4-20 - PLAIN
	000D65-08-00B	EA	NUT - HEX - LOCKING W/SERRATED FLANGE - 8-32 - ZINC
	000D73-08-00C	EA	NUT - HEX FLANGE - 1/2-13
	000D75-09-00B	EA	NUT - HEX LOCKING - 9/16-12 - ZINC
	000D76-06-00B	EA	NUT - HEX FLANGE - 3/8-16
	000E11-04-00F	EA	WASHER - LOCKING - 1/4 MED SPLIT - STAINLESS STEEL
	000E11-07-00B	EA	WASHER - LOCKING - 7/16 MED SPLIT - ZINC
	000E11-08-00B	EA	WASHER - LOCKING - 1/2 MED SPLIT - ZINC
	000E13-17-00B	EA	WASHER - FLAT - 3/8 AR - ZINC
	000E13-18-00B	EA	WASHER - FLAT - 3/8 WIDE - ZINC
	000E13-20-00B	EA	WASHER - FLAT - 7/16 WIDE - ZINC
	000E13-22-00B	EA	WASHER - FLAT - 1/2 WIDE - ZINC
	000E13-26-00B	EA	WASHER - FLAT - 5/8 WIDE - ZINC
	000E14-10-00B	EA	WASHER - LOCKING - #10 EXTERNAL TOOTH - ZINC
	000E16-10-00B	EA	WASHER - HARDENED - 5/8 - FLAT - ZINC
	000G45-05-16B	EA	BOLT - LAG - 5/16-9 X 1 - ZINC
	039715-01-000	EA	NUT-SERT - 1/4" DIAMETER - 20 THREADS
	040921-01-000	EA	NUT - SPEED - U TYPE - #10-24 - BLACK
	040921-03-000	EA	NUT - SPEED - U TYPE - #10
	040921-04-000	EA	NUT - SPEED - U TYPE - #8-.59" LENGTH X .44" WIDTH
	040921-05-000	EA	NUT - SPEED - U-TYPE - 8-.67" X .44" WIDE
	040921-11-000	EA	NUT - SPEED - U-TYPE - 8-.59" LENGTH X .44" WIDTH - BLACK
	041322-01-000	EA	WASHER - FLANGE - 15/32"ID X 2 3/8"OD - F/SEAT BELT MTG
	044364-02-000	EA	NUT - SPEED - FLAT - ROUND
	044533-01-000	EA	WASHER - 1 3/8"OD - FOR BUTTONS - PLASTIC
	051387-06-000	EA	BOLT - CARRIAGE W/O HOLE - 5/16-18 X 9 1/2 - ZINC
	058716-02-000	EA	WASHER - FLAT NYLON
	064081-03-000	EA	NUT - WING 3/8-16 - W/WELD NUT
	077071-01-000	EA	WASHER - FENDER - 3/16"ID X 1"OD
	087234-01-000	EA	NUT - JACK - 1/4 X 20 THD - MOLLY
	088787-12-000	EA	STUD - WELD - 1/4 - 20 X 1.0 LG - MN
	106956-03-000	EA	BOLT - HEX TAP - 1/2-13NC X 3 - GRADE 5 - FULL THREAD/ZINC
	106956-10-000	EA	BOLT - HEX TAP - 9/16-12NC X 3 5/8 -GRD 5-FULL THREAD/ZINC
	106956-11-000	EA	BOLT - HEX TAP - 1/2-13NC X 2 1/2 - GRD 5-FULL THREAD/ZINC
	106956-13-000	EA	BOLT - HEX TAP - 1/2-20 X 2 1/2 - GRD 5-FULL THREAD/ZINC
	107397-01-000	EA	WASHER - FENDER - 3/4"ID X 1"OD
	108067-03-000	EA	STUD - WELD - 1/4 - 20 X 1/2 CD
	109917-01-000	EA	WASHER - 1.5" X 1.25"
	109917-03-000	EA	WASHER - 1" X .50"
	109917-04-000	EA	WASHER - 1" X .75"
	128444-01-000	EA	WASHER - SPRING - CONICAL
	135092-02-01A	EA	BOLT - HEX - SERRATED FLANGE - 1/2-20 X 2 1/2-GRADE 5 ZINC
	135092-05-01A	EA	BOLT - HEX - SERRATED FLANGE - 1/2-20 X 1 - GRADE 5 ZINC
	143399-01-01A	EA	NUT/RETAINING - 3/8"- 24 NFT
	147284-02-000	EA	NUT/SELF RETAINING - 5/16"-18
	148817-01-000	EA	WASHER/SPUR - LOCKING

COPYRIGHT © 2009 WINNEBAGO INDUSTRIES INC.

SEALANTS & FASTENERS GROUP (CONTINUED)

SCREWS

KEY	PART NUMBER	U/M	DESCRIPTION
	0G1208-12-170	EA	SCREW - 8-18 X 3/4 POH - BRIGHT WHITE
	0G3908-08-170	EA	SCREW - SF/DR - 8-18 X 1/2 PPH - BRIGHT WHITE
	0G3908-16-170	EA	SCREW - SF/DR - 8-18 X 1 PPH - BRIGHT WHITE
	0G3908-24-170	EA	SCREW - SF/DR - 8-18 X 1 1/2 PPH - BRIGHT WHITE
	0G3910-10-420	EA	SCREW - SF/DR - 10-16 X .62 PPH - BRIARWOOD
	0G3910-12-170	EA	SCREW - SF/DR - 10-16 X 3/4 PPH - BRIGHT WHITE
	0G3910-24-170	EA	SCREW - SF/DR - 10-16 X 1 1/2 PPH - BRIGHT WHITE
	0G5508-08-370	EA	SCREW - SF/DR - 8-18 X .5 PWH - RIVERSTONE
	0G5508-08-380	EA	SCREW - SF/DR - 8-18 X .5 PWH - CASHMERE
	0G5508-08-420	EA	SCREW - SF/DR - 8-18 X .5 PWH - BRIARWOOD
	0G5508-08-440	EA	SCREW - SF/DR - 8-18 X .5 PWH - CAMEL
	0G5508-08-450	EA	SCREW - SF/DR - 8-18 X .5 PWH - SADDLE
	0G5508-12-170	EA	SCREW - SF/DR - 8-18 X 3/4 PWH - BRIGHT WHITE
	0G5508-12-330	EA	SCREW - SF/DR - 8-18 X 3/4 PWH - PUTTY
	0G5508-12-380	EA	SCREW - SF/DR - 8-18 X 3/4 PWH - CASHMERE
	0G5508-12-320	EA	SCREW - SF/DR - 8-18 X 3/4 PWH - GLACIER
	0G5508-12-450	EA	SCREW - SF/DR - 8-18 X 3/4 PWH - SADDLE
	0G5508-16-330	EA	SCREW - SF/DR - 8-18 X 1 PWH - PUTTY
	0G5508-16-370	EA	SCREW - SF/DR - 8-18 X 1 PWH - RIVERSTONE
	0G5508-16-380	EA	SCREW - SF/DR - 8-18 X 1 PWH - CASHMERE
	0G5508-16-440	EA	SCREW - SF/DR - 8-18 X 1 PWH - CAMEL
	0G5508-16-450	EA	SCREW - SF/DR - 8-18 X 1 PWH - SADDLE
	0G6008-16-170	EA	SCREW - SF/DR - 8-18 X 1 POH - BRIGHT WHITE
	0G6012-32-170	EA	SCREW - SF/DR - 12-14 X 2 POH - BRIGHT WHITE
	0G6710-08-170	EA	SCREW - 10-12 X 1/2 PPH - BRIGHT WHITE
	0G6710-12-170	EA	SCREW - 10-12 X 3/4 PPH - BRIGHT WHITE
	0G6806-16-170	EA	SCREW - 6-18 X 1 POH - BRIGHT WHITE
	0G6810-24-280	EA	SCREW - 10-12 X 1 1/2 POH - SOFT WHITE
	000C20-06-24T	EA	SCREW - 3/8-16 X 1 1/2 - FLAT SOCKET
	000G11-06-08B	EA	SCREW - 6-20 X 1/2 PPH - ZINC
	000G11-06-10B	EA	SCREW - 6-20 X 5/8 PPH - ZINC
	000G11-06-10J	EA	SCREW - 6-20 X 5/8 PPH - BRASS
	000G11-07-08B	EA	SCREW - 7-19 X 1/2 PPH - ZINC
	000G11-08-06B	EA	SCREW - 8-18 X 3/8 PPH - ZINC
	000G11-08-08T	EA	SCREW - 8-18 X 1/2 PPH - FLUOROCARBON COATING
	000G11-08-12B	EA	SCREW - 8-18 X 3/4 PPH - ZINC
	000G11-08-12P	EA	SCREW - 8-18 X 3/4 PPH - DARK BROWN
	000G11-08-12S	EA	SCREW - 8-18 X 3/4 PPH - OFF WHITE
	000G11-08-12T	EA	SCREW - 8-18 X 3/4 PPH - BLACK MAGNESIUM
	000G11-08-20B	EA	SCREW - 8-18 X 1 1/4 PPH - ZINC
	000G11-08-20G	EA	SCREW - 8-18 X 1 1/4 - ANTIQUE BRASS
	000G11-10-12D	EA	SCREW - 10-16 X 3/4 PPH - BLACK
	000G11-10-32P	EA	SCREW-10,16X2.00 PPH DK BRN
	000G12-06-08T	EA	SCREW - 6-20 X 1/2 POH - BLACK
	000G12-10-16F	EA	SCREW - 10-16 X 1 POH - STAINLESS STEEL
	000G13-05-10B	EA	SCREW - 5-12 X 5/8 PFH - ZINC
	000G13-06-06I	EA	SCREW - 6-20 X 3/8 PFH - BLACK ZINC
	000G13-06-08B	EA	SCREW - 6-20 X 1/2 PFH - ZINC
	000G13-06-08G	EA	SCREW - 6-20 X 1/2 PFH - ANTIQUE BRASS
	000G13-06-10G	EA	SCREW - 6-20 X 5/8 PFH - ANTIQUE BRASS
	000G13-06-16E	EA	SCREW - 6-20 X 1 PFH - CHROME
	000G13-06-16J	EA	SCREW - 6-20 X 1 PFH - BRASS
	000G13-06-24J	EA	SCREW - 6-20 X 1 1/2 PFH - BRASS
	000G13-07-10H	EA	SCREW - 7-19 X 5/8 PFH - BLACK
	000G13-07-12B	EA	SCREW - 7-19 X 3/4 PFH - ZINC
	000G11-08-08B	EA	SCREW - 8-18 X 1/2 PPH - ZINC
	000G13-08-10B	EA	SCREW - 8-18 X 5/8 PFH - ZINC
	000G13-08-109	EA	SCREW - 8-18 X 5/8 PFH
	000G13-08-16B	EA	SCREW - 8-18 X 1 PFH - ZINC
	000G13-08-24B	EA	SCREW - 8-18 X 1 1/2 PFH - ZINC
	000G13-08-28I	EA	SCREW - 8-18 X 1.75 PFH BLACK
	000G16-04-24B	EA	SCREW - MACHINE - 1/4-20 X 1 1/2 PPH
	000G18-08-16B	EA	SCREW - MACHINE - 8-32 X 1 PPH - ZINC
	000G18-08-22B	EA	SCREW - MACHINE - 8-32 X 1 3/8 PPH - ZINC

COPYRIGHT © 2009 WINNEBAGO INDUSTRIES INC.

SEALANTS & FASTENERS GROUP (CONTINUED)

SCREWS (CONTINUED)

KEY	PART NUMBER	U/M	DESCRIPTION
	000G18-08-24B	EA	SCREW - MACHINE - 8-32 X 1 1/2 PPH - ZINC
	000G19-10-08B	EA	SCREW - MACHINE - 10-32 X 1/2 PPH - ZINC
	000G19-10-10B	EA	SCREW - MACHINE - 10-32 X 5/8 - PPH - ZINC
	000G19-10-12F	EA	SCREW - MACHINE - 10-32 X 3/4 PPH - STAINLESS STEEL
	000G19-10-20B	EA	SCREW - MACHINE - 10-32 X 1 1/2 PPH - ZINC
	000G32-10-06B	EA	SCREW - 10-32 X 3/8 PPH - ZINC
	000G34-05-12B	EA	SCREW - HEX HEAD TAPPING - 5/16 X 3/4 LONG
	000G39-06-10T	EA	SCREW - SF/DR - 6-20 X 5/8 PPH - BLACK
	000G39-06-16T	EA	SCREW - SF/DR - 6-20 X 1 PPH - BLACK
	000G39-08-06B	EA	SCREW - SF/DR - 8-18 X 3/8 PPH - ZINC
	000G39-08-08B	EA	SCREW - SF/DR - 8-18 X 1/2 PPH - ZINC
	000G39-08-08S	EA	SCREW - SF/DR - 8-18 X 1/2 PPH - OFF WHITE
	000G39-08-08T	EA	SCREW - SF/DR - 8-18 X 1/2 PPH - BLACK
	000G39-08-12T	EA	SCREW - SF/DR - 8-18 X 3/4 PPH - BLACK
	000G39-08-16B	EA	SCREW - SF/DR - 8-18 X 1 PPH - ZINC
	000G39-08-16T	EA	SCREW - SF/DR - 6-20 X 1 PPH - BLACK
	000G39-08-24B	EA	SCREW - SF/DR - 8-18 X 1 1/2 PPH - ZINC
	000G39-08-24T	EA	SCREW - SF/DR - 8-18 X 1 1/2 PPH - BLACK
	000G39-08-32B	EA	SCREW - SF/DR - 8-18 X 2 PPH - ZINC
	000G39-08-169	EA	SCREW-SF/DR,8-18X1.00 PPH - FLUROCARBON SILVER
	000G39-10-08B	EA	SCREW - SF/DR - 10-16 X 1/2 PPH - ZINC
	000G39-10-10B	EA	SCREW - SF/DR - 10-16 X 5/8 PPH - ZINC
	000G39-10-12B	EA	SCREW - SF/DR - 10-16 X 3/4 PPH - ZINC
	000G39-10-12S	EA	SCREW - SF/DR - 10-16 X 3/4 PPH - OFF WHITE
	000G39-10-129	EA	SCREW - SF/DR - 10-16 X 3/4 PPH - FLUOROCARBON SILVER
	000G39-10-169	EA	SCREW - SF/DR - 10-16 X 1 PPH - FLUOROCARBON SILVER
	000G39-10-20B	EA	SCREW - SF/DR - 10-16 X 1 1/4 PPH - ZINC
	000G39-10-20T	EA	SCREW - SF/DR - 10-16 X 1 1/4 PPH - BLACK
	000G39-10-24B	EA	SCREW - SF/DR - 10-16 X 1 1/2 PPH - ZINC
	000G39-10-24T	EA	SCREW - SF/DR - 10-16 X 1 1/2" PPH - BLACK
	000G39-10-32B	EA	SCREW - SF/DR - 10-16 X 2 - PPH - ZINC
	000G39-10-48B	EA	SCREW - SF/DR - 10-16 X 3 - PPH - ZINC
	000G39-10-48T	EA	SCREW - SF/DR - 10-16 X 3 PPH - BLACK
	000G42-04-16B	EA	SCREW - SF/DR - 1/4-14 X 1 HWH - ZINC
	000G42-04-24B	EA	SCREW - SF/DR - 1/4-14 X 1 1/2 - ZINC
	000G52-06-05B	EA	SCREW - MACHINE - 6-32 X 5/16 PTH - ZINC
	000G52-06-06B	EA	SCREW - MACHINE - 6-32 X 3/8 PTH - ZINC
	000G54-04-14B	EA	SCREW - 1/4-20 X 7/8 PTH - TYPE 23 - ZINC PLATED
	000G55-08-12T	EA	SCREW - SF/DR - 8-18 X 3/4 PWH - BLACK
	000G55-08-16S	EA	SCREW - SF/DR - 8-18 X 1.00 PWH - OFF WHITE
	000G55-08-16T	EA	SCREW - SF/DR - 8-18 X 1 PWH - BLACK
	000G56-12-48B	EA	SCREW - WOOD - 12-11 X 3 POH - SPECIAL HARDENED
	000G60-08-16E	EA	SCREW - SF/DR - 8-1 X 1 POH - CHROME
	000G60-08-20F	EA	SCREW - SF/DR - 8-19X1.25 POH
	000G60-08-22B	EA	SCREW - SF/DR - 8-18 X 1.38 POH - ZINC
	000G60-10-20B	EA	SCREW - SF/DR - 10-16 X 1 1/4 POH - ZINC
	000G60-10-209	EA	SCREW - SF/DR - 10-16 X 1 1/4 POH - SILVER STALGAARD
	000G60-10-28T	EA	SCREW - SF/DR - 10-16 X 1 3/4 - BLACK
	000G62-06-12B	EA	SCREW-SF/DR,6-20X.75 PFH - ZINC
	000G62-06-249	EA	SCREW - SF/DR - 8-18 X 1.5 PPH - SILVER
	000G62-08-24B	EA	SCREW - SF/DR - 8-18 X 1 1/2 PFH
	000G62-08-24T	EA	SCREW - SF/DR - 8-18 X 1 1/2 PFH - BLACK
	000G67-08-32B	EA	SCREW - 8-15 X 2 PPH - ZINC
	000G67-10-08B	EA	SCREW - 10-12 X 1/2 PPH - ZINC
	000G67-10-08S	EA	SCREW - 10-12 X 1/2 PPH - OFF WHITE
	000G67-10-10B	EA	SCREW - 10-12 X 5/8 PPH - ZINC - TYPE A
	000G67-10-10D	EA	SCREW - 10-12 X 5/8 PPH - BLACK - TYPE A
	000G67-10-10P	EA	SCREW - 10-12 X 5/8 PPH - DARK BROWN
	000G67-10-10S	EA	SCREW - 10-12 X 5/8 PPH - OFF WHITE
	000G67-10-10T	EA	SCREW - 10-12 X 5/8 PPH - BLACK
	000G67-10-10V	EA	SCREW-10-12X5/8 PPH ZN O/W - TYPE A
	000G67-10-12P	EA	SCREW - 10-12 X 3/4 PPH - DARK BROWN
	000G67-10-24B	EA	SCREW - 10-12 X 1 1/2 PPH - ZINC
	000G68-06-10J	EA	SCREW - 6-18 X 5/8 POH - BRASS

COPYRIGHT © 2009 WINNEBAGO INDUSTRIES INC.

SEALANTS & FASTENERS GROUP (CONTINUED)

SCREWS (CONTINUED)

KEY	PART NUMBER	U/M	DESCRIPTION
	000G68-06-12B	EA	SCREW - 6-18 X 3/4 POH - ZINC & CLEAR
	000G68-06-12S	EA	SCREW - 6-18 X 3/4 POH
	029130-01-000	EA	SCREW - SNAP STUD - #8-16 X 5/8" LONG
	029130-02-000	EA	SCREW - SNAP STUD - #8-16 X 1 1/2" LONG
	029130-03-000	EA	SCREW - SNAP STUD - #8-16 X 1" LONG
	049465-03-000	EA	SCREW - 10-16 X 1 POH W/WASHER - OFF WHITE
	049465-17-000	EA	SCREW - 10-16 X 1 POH W/WASHER - BRIGHT WHITE
	054434-02-000	EA	SCREW - SF/DR - 10-16 X 2 - ZINC
	054434-03-000	EA	SCREW - SF/DR - 10-16 X 2 - PWH - ZINC
	075908-01-000	EA	SCREW - MACHINE - 10-32 X .56 PTH - EXTERNAL TOOTH - ZINC
	076790-01-000	EA	SCREW - 6-20 X 1 1/4 PPH - BLACK
	076790-05-000	EA	SCREW - 6-20 X 1/2 PPH - BLACK - THREAD CUTTING/WOOD
	087721-01-000	EA	SCREW - FLAT HEAD - TAPPING - 1/4" X 1 1/4" LONG - ZINC
	093249-01-000	EA	CAP/SCREW - MOLDED/VINYL - BLACK
	095772-01-000	EA	SOCKET-SNAP FASTNER1" SF/DR - SELF DRIVER
	097974-01-000	EA	SCREW - PARTICLE BOARD - 7-9 X 3/4 PPH
	101618-01-000	EA	SCREW - 1/4-20 X 3/4 HEX - TAPPING - STALGARD TYPE F
	113563-01-01A	EA	SCREW - 8 X 5/8 LONG SHOULDER/WASHER HEAD
	113563-01-02A	EA	SCREW - 8 X 5/8 LONG SHOULDER/WASHER HEAD - BRIGHT WHITE
	118383-01-12A	EA	RETAINER/RECESSED - F/.22" SCREW - RIVERSTONE
	118383-01-14A	EA	RETAINER/RECESSED - F/.22" SCREW - PEWTER
	118383-01-15A	EA	RETAINER/RECESSED - F/.22" SCREW - BRIARWOOD
	118383-02-13A	EA	RETAINER/RECESSED - F/.27" SCREW - OFF WHITE
	118383-04-04A	EA	CAP - F/RECESSED RETAINER - BRIGHT WHITE
	118383-04-10A	EA	CAP - F/RECESSED RETAINER - RIVERSTONE
	118383-04-13A	EA	CAP - F/RECESSED RETAINER - OFF WHITE
	118383-04-14A	EA	CAP - F/RECESSED RETAINER - PEWTER
	118383-04-15A	EA	CAP - F/RECESSED RETAINER - BRIARWOOD
	134126-01-01A	EA	SCREW/NAIL - HEX HEAD - 3/4"
	140040-01-000	EA	SCREW - 1/4-20 X 1 - BUTTON HEAD/SOCKET - W/LOCTITE
	149753-01-01A	EA	RETAINER/RECESSED - F/.22" SCREW - BLACK
	149753-01-02A	EA	RETAINER/RECESSED - F/.22" SCREW - BRIGHT WHITE
	149753-02-01A	EA	CAP - F/RECESSED RETAINER - BLACK
	149753-02-02A	EA	CAP - F/RECESSED RETAINER - BRIGHT WHITE
	154938-01-01A	EA	SCREW - SF/DR - 10-16 X 3/4 PPH - W/SELF SEAL - BRIGHT WHITE
	154938-01-02A	EA	SCREW - SF/DR - 10-16 X 3/4 PPH - W/SELF SEAL - BLACK
	154938-02-01A	EA	SCREW - SF/DR - 8-18 X 1 PFH - W/SELF SEAL - BRIGHT WHITE
	154938-02-02A	EA	SCREW - SF/DR - 8-18 X 1 PFH - W/SELF SEAL - BLACK
	154938-02-03A	EA	SCREW - SF/DR - 8-18 X 1 PFH - W/SELF SEAL - SILVER
	154938-03-02A	EA	SCREW - SF/DR - 8-18 X 5/8 PFH - W/SELF SEAL - BLACK
	154938-04-01A	EA	SCREW - SF/DR - 10-16 X 1" TPH - W/SELF SEAL - BRT WHT
	154938-04-02A	EA	SCREW - SF/DR - 10-16 X 1" TPH - W/SELF SEAL - BLACK
	154938-05-03A	EA	SCREW - SF/DR - 8-18 X 1.25" PFH - W/SELF SEAL - SILVER

COPYRIGHT © 2009 WINNEBAGO INDUSTRIES INC.

SEALANTS & FASTENERS GROUP (CONTINUED)

CLAMPS, CLIPS, GROMMETS, RIVETS & PLUGS

KEY	PART NUMBER	U/M	DESCRIPTION
	000H14-06-03R	EA	RIVET - MANDREL BLIND - 3/16 ALUMINUM
	000H16-04-06R	EA	RIVET - POP ALUMINUM - 1/8 X .313 - .375
	007161-01-000	EA	CLAMP - HOSE - SPRING TYPE - 1/2"
	008386-01-000	EA	GROMMET - SNAP - 3/8" DIAMETER - NYLON
	010495-01-000	EA	CLAMP - CABLE - 9/16"ID - BLACK
	010495-02-000	EA	CLAMP - CABLE - 3/8"ID - BLACK
	010495-04-000	EA	CLAMP - CABLE - 11/16"ID - WHITE
	010497-01-000	EA	CLAMP - CLOSED - 5/8"ID
	010497-02-000	EA	CLAMP - CLOSED - 1.5"ID
	010497-03-000	EA	CLAMP - CLOSED - 1"ID - CUSHIONED
	010497-04-000	EA	CLAMP - CLOSED - 1 5/8"ID
	010497-05-000	EA	CLAMP - CLOSED - 1/2"ID
	010497-07-000	EA	CLAMP - CLOSED - 3/8"ID
	010497-09-000	EA	CLAMP - CLOSED - 5/16"ID
	010497-10-000	EA	CLAMP - CLOSED - 7/8"ID
	010499-01-000	EA	CLAMP - CLOSED - 3/8"ID
	016188-03-000	EA	GROMMET - LP LINE - 3/8"HOLE X 2 1/2"LONG - RUBBER
	016188-04-000	EA	GROMMET - LP LINE - 1/2"HOLE X 2 1/2"LONG - RUBBER
	016188-05-000	EA	GROMMET - LP LINE - 3/8"HOLE X 1 1/4"LONG - RUBBER
	016188-06-000	EA	GROMMET - LP LINE - 3/8"HOLE X 3 1/4"LONG - RUBBER
	016188-07-000	EA	GROMMET - L/P LINE - 1/2"HOLE X 3 1/4"LONG
	016188-08-000	EA	GROMMET - LP LINE - 1/2"HOLE X 1 1/4"LONG - RUBBER
	016188-09-000	EA	GROMMET - LP LINE - .68"HOLE X 1 1/4"LONG - RUBBER
	016188-10-000	EA	GROMMET - LP GAS - .68" X 2.5"
	023942-01-000	EA	GROMMET - RUBBER - 2"OD
	041930-11-000	EA	RIVET - POP ALUMINUM - 1/8 X .188 - .250 - BRIGHT WHITE
	061420-04-000	EA	PLUG/PLASTIC - 1 1/4" DIAMETER
	061420-05-000	EA	PLUG/PLASTIC - 1 1/2" DIAMETER
	061420-09-000	EA	PLUG/PLASTIC - 1.00" DIAMETER
	061420-12-000	EA	PLUG/PLASTIC - 1.50" DIAMETER - RED
	061420-13-000	EA	PLUG/PLASTIC - 3/8" - FLUSH
	061420-14-000	EA	PLUG/PLASTIC - 7/8" DIAMETER - BLACK
	061420-15-000	EA	PLUG/PLASTIC - 2" DIAMETER - BLACK
	061420-16-000	EA	PLUG/PLASTIC - 2 1/8" DIAMETER - BLACK
	061420-18-000	EA	PLUG/PLASTIC - 1 3/4" DIAMETER - BLACK
	062401-01-000	EA	CLAMP - HOSE - WORMGEAR - .25" - 1"
	062401-02-000	EA	CLAMP - HOSE - WORMGEAR - 1.56" - 2.5" ID
	062401-03-000	EA	CLAMP - HOSE - WORMGEAR - .22" - 1" ID
	062401-04-000	EA	CLAMP - HOSE - WORMGEAR - .69" - 1.25" ID
	062401-06-000	EA	CLAMP - HOSE - WORMGEAR - .22" - .62" ID
	062401-09-000	EA	CLAMP - HOSE - WORMGEAR - 2.8" - 3.75" ID
	062401-11-000	EA	CLAMP - HOSE - WORMGEAR - 3.50" - 4.50" ID
	062401-13-000	EA	CLAMP - HOSE - WORMGEAR
	071015-11-000	EA	GROMMET - RUBBER - 1"ID FITS .12 MATERIAL - BLACK
	071015-13-000	EA	GROMMET - RUBBER - .62"ID X 1"OD W/.09" GROOVE - BLACK
	071015-20-000	EA	GROMMET - .38 ID FITS .06 MTL
	071015-22-000	EA	GROMMET - RUBBER - .62"ID X 1.12"OD W/.19" GROOVE - BLACK
	071015-26-000	EA	GROMMET - RUBBER - 1.5"ID X 2.1"OD W/.06" GROOVE - BLACK
	071015-29-000	EA	GROMMET - RUBBER - .3"ID X 1.3"OD W/.12" GROOVE - BLACK
	071015-30-000	EA	GROMMET - RUBBER - .3"ID X .81"OD W/.12" GROOVE - BLACK
	071015-39-000	EA	GROMMET - .75 ID FITS .06 MTL
	071015-41-000	EA	GROMMET - .125 ID FITS .188 MTL
	071015-42-000	EA	GROMMET - .25 ID FITS .06 MTL
	071015-43-000	EA	GROMMET-.25 ID,FITS .07 MATL, MINOR Z-4139
	071015-44-000	EA	GROMMET - .31 ID FITS .25 MTL
	075148-02-000	EA	CLAMP - GROUNDING - BRONZE SCREWS
	077955-01-000	EA	CLIP/J - 3/8" - VINYL COATED
	081211-03-000	EA	PLUG - PLASTIC - .50"DIAMETER - TRUSS HEAD - BLACK
	081211-04-000	EA	PLUG - PLASTIC - .46"DIAMETER - TRUSS HEAD - BLACK
	081211-06-000	EA	PLUG-PLASTIC,.468DIA,BLACK , HEYCO 1669
	083609-01-000	EA	CLAMP - WIRE - DUAL - EQUAL DIAMETERS - 5/8"
	083610-01-000	EA	CLAMP - WIRE - DUAL - UNEQUAL DIAMETERS - 3/4" & 1 1/4"
	083610-02-000	EA	CLAMP - WIRE - DUAL - UNEQUAL DIAMETERS - 3/4" & 2"
	083610-03-000	EA	CLAMP - WIRE - DUAL - EQUAL DIAMETERS - 2"

COPYRIGHT © 2009 WINNEBAGO INDUSTRIES INC.

SEALANTS & FASTENERS GROUP (CONTINUED)

CLAMPS, CLIPS, GROMMETS, RIVETS & PLUGS (CONTINUED)

KEY	PART NUMBER	U/M	DESCRIPTION
	083610-02-000	EA	CLAMP - WIRE - DUAL - UNEQUAL DIAMETERS - 3/4" & 2"
	083610-03-000	EA	CLAMP - WIRE - DUAL - EQUAL DIAMETERS - 2"
	088756-01-000	EA	GROMMET - WEB - 1 1/8"ID
	089329-02-000	EA	CLIP - SPRING
	091952-01-000	EA	CLIP - GRIPPER - 1" - BLACK VINYL COATED
	091952-02-000	EA	CLIP - GRIPPER - 3/4" - BLACK VINYL COATED
	091952-03-000	EA	CLIP - GRIPPER - 1/2" - BLACK VINYL COATED
	094362-02-000	EA	CLIP - XMAS TREE - BINDER HEAD - .9" LONG/ANY COLOR
	113133-02-01A	EA	RIVET - POP - ALUMINUM - 3/16 X .252 - .504 - BLACK
	114208-05-000	EA	GROMMET - EDGE LINER - FITS 2"
	118626-01-01A	EA	RIVET/POP - ALUMINUM - 3/16 X 1.2"(GRIP RANGE .1"-.4")
	118626-01-02A	EA	RIVET/POP - ALUMINUM - 3/16 X .08 - .375
	118626-02-01A	EA	RIVET/POP - ALUMINUM - 3/16 X .500 - .750
	118626-03-01A	EA	RIVET/POP - STAINLESS STEEL - 3/16 X .500 - .750
	137014-01-01A	EA	GROMMET - CABLE - ALMOND
	139118-02-01A	EA	GROMMET - SCREW - PLASTIC
	155498-01-01A	EA	CLAMP - CLOSED - 7/8"ID - VINYL DIP/GALVONIZED - BLACK

MISCELLANEOUS FASTENERS

KEY	PART NUMBER	U/M	DESCRIPTION
	008343-01-000	EA	TIE - WIRE - 6"
	008343-02-000	EA	TIE - WIRE - 14"
	008343-03-000	EA	TIE - WIRE - 7 1/2" - BLACK
	029094-04-000	YD	VELCRO TAPE/LOOP - 1"WIDE - W/ADHESIVE BACK - BLACK
	029096-03-000	YD	VELCRO TAPE/HOOK - 1"WIDE - BLACK
	029096-04-000	YD	VELCRO TAPE/HOOK - 1"WIDE - BLACK - W/ADHESIVE BACK (PSA)
	048394-02-000	YD	VELCRO TAPE - HOOK - ADHESIVE BACK - 3/4" WIDE - BEIGE
	085774-01-000	FT	FASTENER - DUAL LOCK - 1" WIDE - ADHESIVE BACK - BLACK
	085774-02-000	FT	FASTENER - DUAL HOOK - 1" WIDE - ADHESIVE BACK - BLACK
	088792-02-000	YD	VELCRO TAPE - LOOP - 3/4" - ADHESIVE BACK - BEIGE
	088792-04-000	YD	VELCRO TAPE - HOOK - 5/8" - NON-ADHESIVE BACK - WHITE
	088792-05-000	YD	VELCRO TAPE - LOOP - 5/8" - NON-ADHESIVE BACK - WHITE
	108046-02-000	EA	CABLE TIE - SCREW MOUNT 15"

COPYRIGHT © 2009 WINNEBAGO INDUSTRIES INC.

WATER & DRAINAGE GROUP

DRAINAGE SYSTEM

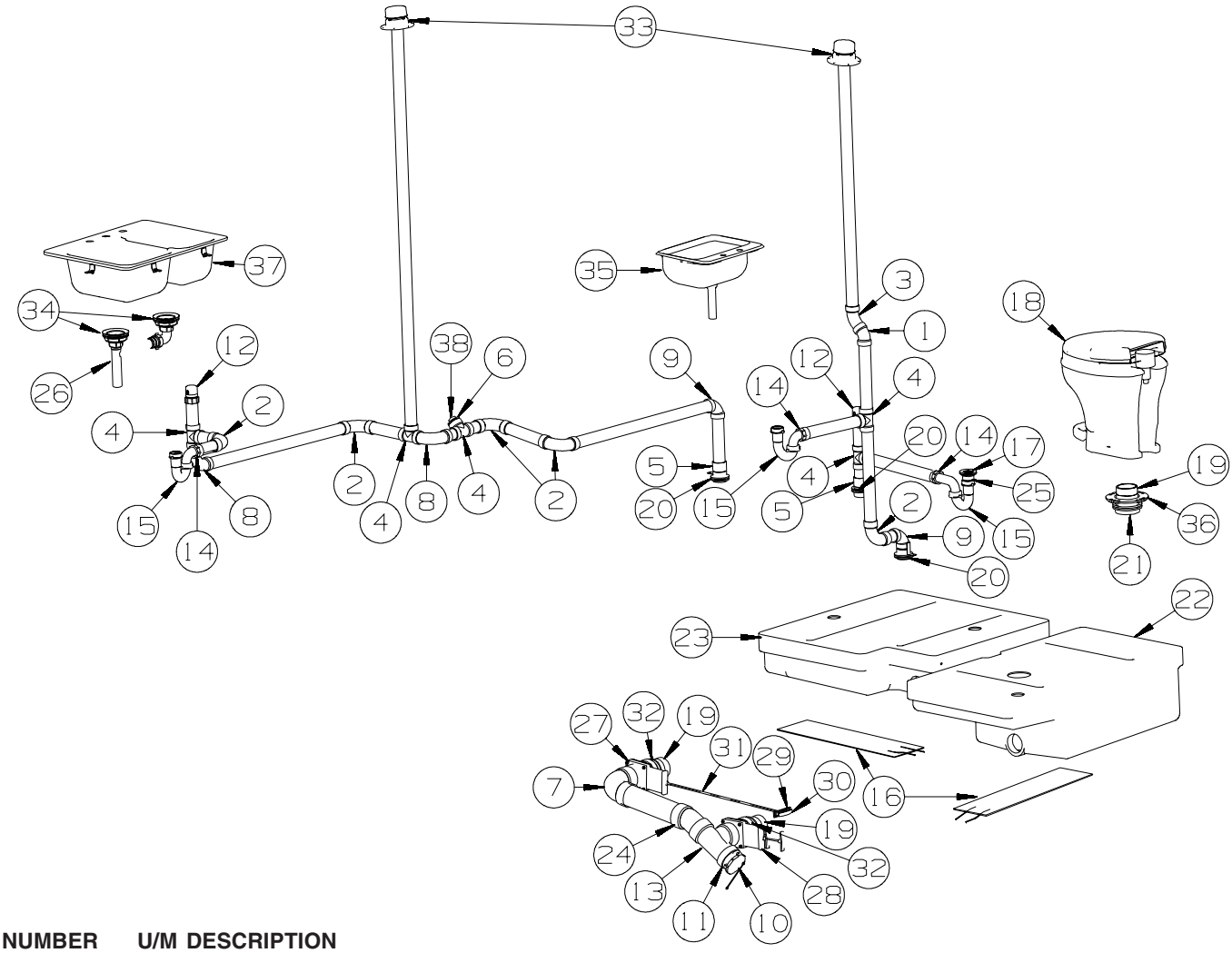

KEY	PART NUMBER	U/M	DESCRIPTION
1	010006-01-000	EA	ELBOW - 45 DEGREE - 1 1/2" HUB X HUB - PLASTIC
2	010008-01-000	EA	ELBOW - 90 DEGREE - 1 1/2" HUB X HUB - PLASTIC
3	010051-01-000	EA	ELBOW - 45 DEGREE - 1 1/2" SPIGOT X HUB - PLASTIC
4	010071-01-000	EA	TEE - SANITARY - 1 1/2" HUB X HUB X HUB - PLASTIC
5	010115-01-000	EA	COUPLING - 1 1/2" HUB X HUB - PLASTIC
6	010122-01-000	EA	BUSHING/PLASTIC - REDUCER - 1 1/2"SMTH X 1 1/4"THD - BLACK
7	031126-01-000	EA	ELBOW - 1/4 BEND - 3" X 90" XLT - BLACK PLASTIC
8	033761-01-000	EA	ELBOW - 90 DEGREE - TURN - 1 1/2" HUB X 1 1/2" SPIGOT
9	034250-01-000	EA	ELBOW - 90 DEGREE - LONG TURN - 1 1/2" HUB X HUB - ABS
10*	062415-01-000	EA	CAP - SEWER - 3" DIAMETER
11	062417-01-000	EA	ADAPTER - TERMINATION - 3"
12	079968-01-000	EA	VENT - MECHANICAL/TRAP ARM - ANTI-SIPHON-2" X 7.3" PLASTIC
13	136664-01-000	EA	TEE - PLASTIC - 3"
14	152146-01-000	EA	CONNECTOR - 1 1/2"P X 1 1/2"MPT
15	107538-02-000	EA	P-TRAP - PLASTIC - 1 1/2" W/EXTENSION ARM
15	011071-01-000	EA	P-TRAP - 1 1/2" - CSA - PLASTIC - 265
16	133972-01-000	EA	PAD/HEATER - HOLDING TANK - F/40 GALLON - 23T
17	066440-01-000	EA	STRAINER - SHOWER DRAIN - W/RUBBER WASHER
	127440-02-01A	EA	WASHER - RUBBER - 1.8" X .1"
18*	147421-04-01A	EA	TOILET/AQUA MAGIC 5 (HIGH) HANDFLUSH - W/O SPRAY - WHITE
19	010129-03-000	EA	NIPPLE - 3" X 3" TOE - PLASTIC
20	061607-01-000	EA	GROMMET - HOLDING TANK - 1 1/2" NPS
21	061607-02-000	EA	GROMMET - HOLDING TANK - 3" NPS
22	137501-01-01A	EA	TANK - HOLDING - 37 GALLON - W/O FITTINGS
	010129-03-000	EA	NIPPLE - 3" X 3" TOE - PLASTIC
	049032-01-000	EA	PATCH - SPINWELD - 1"ID - 1.9"OD - PLASTIC
23	137502-01-01A	EA	TANK - HOLDING - W/O FITTINGS
	049032-01-000	EA	PATCH - SPINWELD - 1"ID - 1.9"OD - PLASTIC
24	010023-01-000	EA	ELBOW/STREET - PLASTIC

COPYRIGHT © 2009 WINNEBAGO INDUSTRIES INC.

WATER & DRAINAGE GROUP (CONTINUED)

DRAINAGE SYSTEM (CONTINUED)

KEY	PART NUMBER	U/M	DESCRIPTION
25	011069-02-000	EA	TAILPIECE - TUB/SHOWER - 1 1/2" X 1 1/4" X 4" - BRASS
25	130403-01-000	EA	NUT - SLIP - W/WINGS 1 1/2"
26	011091-02-000	EA	WASTE - CONTINUOUS - DOUBLE SINK
27	062418-02-000	EA	VALVE-3",HUBXSPIGOT,W/O HNDL - VALTERRA T40 WINN
28	062418-03-000	EA	VALVE- 3" SPIGOT X 3" SPIGOT
29	062419-05-000	EA	BRACKET - VALVE - LOCKING
30	062419-06-000	EA	HANDLE - T
31	062419-10-000	EA	HANDLE - EXTENSION - W/TAPPED END
32	078406-01-000	EA	COUPLER - 3" X 3" W/CLAMPS - RUBBER
33	150034-02-01A	EA	VENT - W/COVER - F/PLUMBING STACK - OFF WHITE
34	092303-01-000	EA	STRAINER - W/BASKET - GALLEY SINK - 4" OD
35*	096927-01-02A	EA	SINK - LAVATORY - RECTANGULAR - PLASTIC - SOFT WHITE
36	148914-01-000	EA	FLANGE - CLOSET - FPT - 4" X 3"
37	163942-02-01A	EA	SINK/DOUBLE - LRG/SML BASIN - 25" X 19" - PLASTIC/SILVER
38	010166-01-000	EA	PLUG/THREADED - 1 1/4"MPT - PLASTIC - BLACK - UL

***COMPONENT PARTS LISTED LATER IN THIS GROUP**

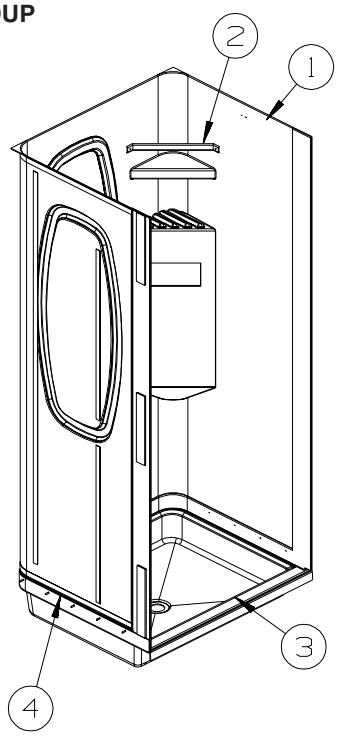

KEY	PART NUMBER	U/M	DESCRIPTION
1	147070-03-18A	EA	SURROUND - SHOWER - SOFT WHITE
2	113714-02-02A	EA	RETAINER - SHELF/SHOWER - 10.6" - SOFT WHITE FROM: 00-00-00 THRU: 03-29-09
2	113714-02-41A	EA	RETAINER - SHELF/SHOWER - 10.6" - WHITE FROM: 03-30-09 THRU: 99-99-99
3	M02630-76-R13	EA	SHOWER PAN - W/STRAINER
4	154585-03-01A	FT	SEAL - FOAM TAPE - ADHESIVE 2 SIDED - 1/8" X 3/4" - BLACK

COPYRIGHT © 2009 WINNEBAGO INDUSTRIES INC.

WATER & DRAINAGE GROUP (CONTINUED)

COMPONENT PARTS FOR DRAINAGE SYSTEM

062415-01-000

KEY	PART NUMBER	U/M	DESCRIPTION	VENDOR NO.
	062415-01-700	EA	STRING-SEWER CAP	V#SV7 STRAP

096927-01-02A

KEY	PART NUMBER	U/M	DESCRIPTION	VENDOR NO.
	096927-01-700	EA	SINK STOPPER	M9801
	096927-01-701	EA	TAILPIECE-DRAIN-LAVATORY	M9802

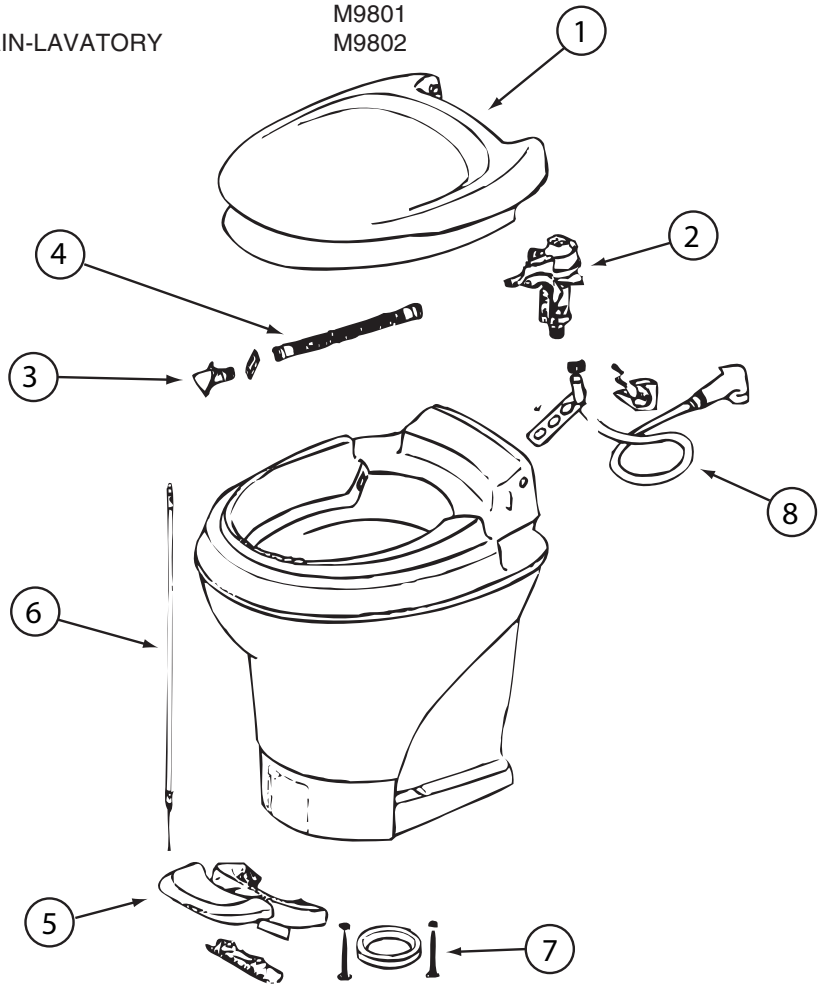

147421-04-01A, 147421-05-01A

KEY	PART NUMBER	U/M	DESCRIPTION	VENDOR NO.
1	147421-01-700	EA	SEAT & COVER ASSEMBLY(WHT)	31703
2	147421-01-701	EA	WATER MODULE ASSEMBLY	31705
3	147421-01-702	EA	NOZZLE ASSEMBLY	31706
4	147421-01-703	EA	HOSE/LINK - WATER MODULE	31621
7	063740-01-706	EA	BOLT PACKAGE-FLOOR FLANGE	12524 THETFORD
	147421-01-706	EA	SEAL - BLADE	31708
	147421-01-707	EA	CAP (UNIVERSAL BOLT) - WHITE	31713

CONTACT WINNEBAGO PART SALES FOR UNLISTED COMPONENT(S)

COPYRIGHT © 2009 WINNEBAGO INDUSTRIES INC.

WATER & DRAINAGE GROUP (CONTINUED)

WATER SYSTEM

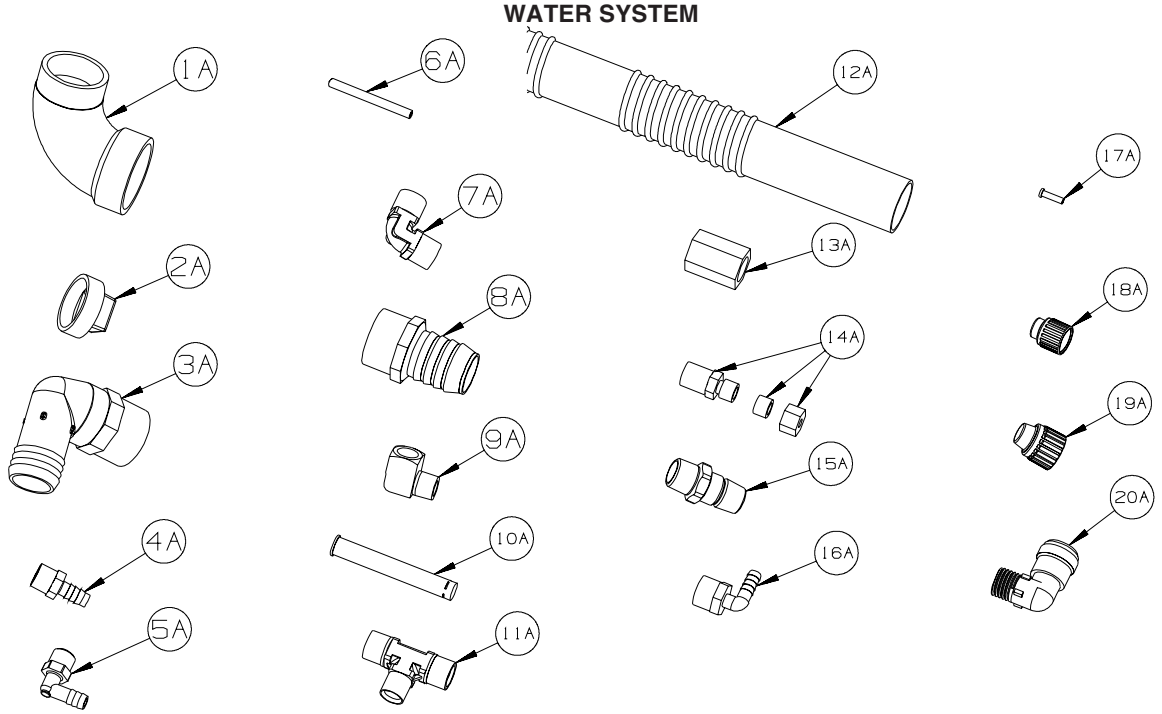

KEY	PART NUMBER	U/M	DESCRIPTION
1A	010009-01-000	EA	ELBOW - 90 DEGREE - 1/4 BEND - 1 1/2" PLASTIC
2A	010166-01-000	EA	PLUG/THREADED - 1 1/4"MPT - PLASTIC - BLACK - UL
3A	010219-01-000	EA	ELBOW - 1 1/4 MPT X 1 1/4 BARB - WATER FILL - PLASTIC
4A	010224-01-000	EA	ADAPTER - HOSE TO PIPE - 3/8 MPT X 3/8 BARB - PLASTIC
5A	035539-01-000	EA	ELBOW - 3/8 MPT X 3/8 BARB - PLASTIC
6A	039800-04-000	FT	TUBING - POLYBUTYL - 1/4"OD
6A	074462-02-000	FT	TUBING - VINYL - 3/8 ID X 20' - CLEAR
6A	112176-01-000	FT	TUBING - VINYL - REINFORCED - 1/2" ID
6A	124188-01-000	FT	TUBING - PEX - 1/2" ID X 20' - BLUE(COLD)
6A	124188-02-000	FT	TUBING - PEX - 1/2" ID X 20' - RED(HOT)
7A	039808-03-000	EA	ELBOW - 1/2" MPT X 1/2" MPT - PLASTIC
8A	044927-01-000	EA	ADAPTER - HOSE TO PIPE-1 1/4 MPTX1 1/4 BARB-BLACK PLASTIC
9A	065318-02-000	EA	ELBOW - 90 DEGREE - 3/8" MPT TO 3/8" FPT
10A	077954-02-000	EA	FILTER - WATER TANK - W/SCREEN IN TANK
11A	039798-01-000	EA	TEE - 1/2"MPT X 1/2"MPT X 1/2"MPT - PLASTIC
12A	079381-01-000	FT	TUBING - RIBBED FLEXIBLE/WATER FILL - 10 FT = 1EA-1.38ID
13A	101814-01-000	EA	COUPLING - FEMALE - 1/2" X 1/2" FPT - GRAY
14A	103798-01-000	EA	CONNECTOR - 1/4 OD X 3/8 MPT
15A	110438-02-000	EA	VALVE - CHECK - 1/2"MPT X 1/2"MPT - BRASS
16A	111223-02-000	EA	ELBOW - 1/2" MPT X 3/8" BARB - PLASTIC
16A	111223-04-000	EA	ELBOW - 1/2" MPT X 1/2" BARB - PLASTIC
16A	111888-01-000	EA	FERRULE - PLASTIC - .250 ID X .375 OD
17A	111888-02-000	EA	INSERT - BRASS - 1/4 COMP
18A	113697-01-000	EA	CAP - 3/8"P
19A	114427-01-000	EA	CAP - 1/2"P
20A	164906-01-000	EA	ELBOW - 90 DEGREE - 1/2" QUICK CONNECT X 1/2"MPT

COPYRIGHT © 2009 WINNEBAGO INDUSTRIES INC.

WATER & DRAINAGE GROUP (CONTINUED)

WATER SYSTEM (CONTINUED)

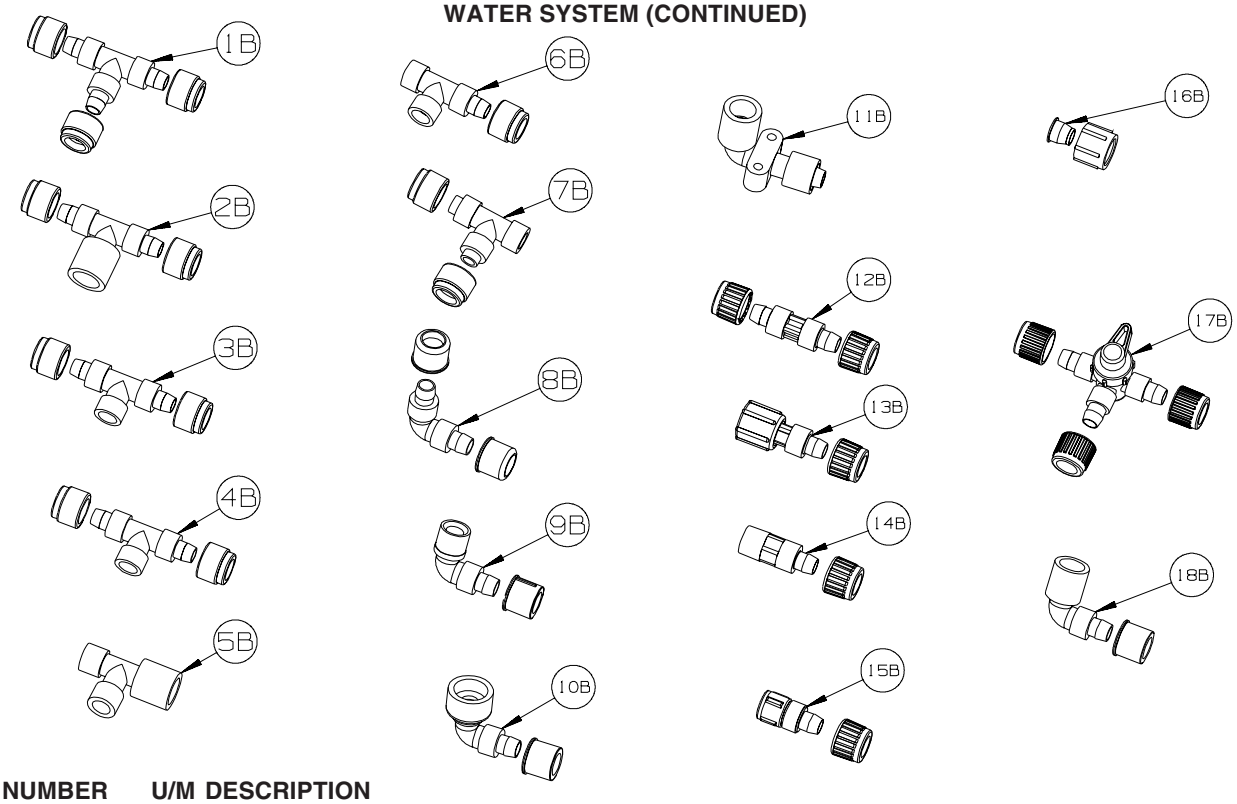

KEY	PART NUMBER	U/M	DESCRIPTION
1B	114428-01-000	EA	TEE - 1/2"P X 1/2"P X 1/2"P
2B	114428-02-000	EA	TEE - SWIVEL - 1/2"P X 1/2"P X 1/2"FPT
3B	114428-03-000	EA	TEE - 1/2"P X 1/2"P X 1/2"MPT
4B	114428-04-000	EA	TEE - 1/2"P X 1/2"P X 1/8"FPT
5B	114428-05-000	EA	TEE - 1/2" SWIVEL X 1/2" MPT X 1/2" MPT
6B	114428-06-000	EA	TEE - 1/2" P X 1/2" MPT X 1/2" MPT
7B	114428-07-000	EA	TEE - 1/2" P X 1/2" MPT X 1/2" P
8B	114429-01-000	EA	ELBOW - 1/2"P X 1/2"P
9B	114429-02-000	EA	ELBOW - 1/2"P X 1/2"MPT
9B	114429-04-000	EA	ELBOW - 1/2"P X 3/8"MPT
9B	114429-10-000	EA	ELBOW - SWIVEL - 1/2"MPT X 1/2"FPT
10B	114429-08-000	EA	ELBOW - SWIVEL - 1/2"P X 1/2"FPT
11B	114429-09-000	EA	ELBOW - 1/2"P X 1/2"FPT DROP EAR
12B	114430-01-000	EA	ADAPTER - 1/2"P X 1/2"P
13B	114430-02-000	EA	ADAPTER - SWIVEL - 1/2"P X 1/2"FPT
13B	114430-04-000	EA	ADAPTER - SWIVEL - 1/2"P X 3/8"MPT
14B	114430-03-000	EA	ADAPTER - 1/2"P X 1/2"MPT
15B	114430-06-000	EA	ADAPTER - 1/2"P X 3/8"FPT
15B	114430-09-000	EA	ADAPTER - 1/2"P X 1/2"FPT
16B	114430-10-000	EA	ADAPTER - NUT - PIPE CONNECTION - 1/2"
17B	114431-01-000	EA	VALVE - 180 DEGREE/CENTER DRAIN - 1/2"P - THREE WAY
18B	114429-11-000	EA	ELBOW - 1/2"P X 1/2"FPT

COPYRIGHT © 2009 WINNEBAGO INDUSTRIES INC.

WATER & DRAINAGE GROUP (CONTINUED)

WATER SYSTEM (CONTINUED)

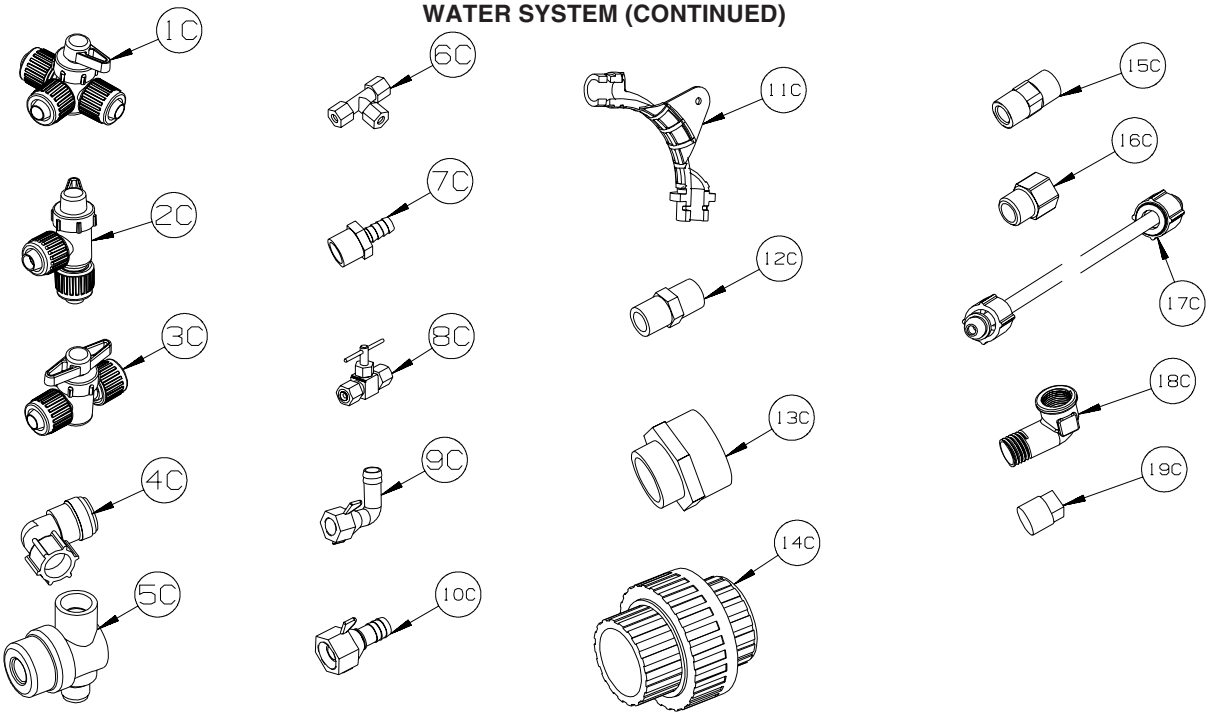

KEY	PART NUMBER	U/M	DESCRIPTION
1C	114431-02-000	EA	VALVE - WATER BYPASS - 1/2"P - THREE WAY (WATER HEATER)
2C	114431-03-000	EA	VALVE - 90 DEGREE DRAIN - 1/2"P
3C	114431-04-000	EA	VALVE - “INLINE SHUT-OFF” - 1/2"P
4C	164906-02-000	EA	ELBOW - 90 DEGREE - 1/2" QUICK CONNECT X 1/2"MPT - SWIVEL
5C	152925-01-01A	EA	FILTER - IN LINE - TWIST ON - 1/2" - BLACK
6C	118423-01-000	EA	FITTING - BRASS-TEE - 1/4C X 1/4C X 1/4C
7C	118809-01-000	EA	ADAPTER - 1/2" MPT X 3/8" BARB - PLASTIC
7C	118809-02-000	EA	ADAPTER - 1/2" MPT X 1/2" BARB - PLASTIC
8C	120868-01-000	EA	VALVE - NEEDLE - 1/4" COMPRESSION X 1/4" COMPRESSION
9C	123150-01-000	EA	ELBOW - 1/2 FPT X 1/2 BARB - SWIVEL
10C	123152-01-000	EA	ADAPTER - 1/2 FPT X 1/2 BARB - SWIVEL
11C	124184-01-000	EA	SUPPORT - WATER LINE - BEND
12C	132148-01-000	EA	CONNECTOR - 1/2” X 1/2”MPT - BRASS
13C	133835-01-000	EA	ADAPTER - REDUCING - 1 1/2" X 1 1/4"
14C	133889-01-000	EA	UNION - 1 1/2 DOUBLE SLIP - PVC
15C	135386-01-000	EA	NIPPLE - 1/2"
16C	136333-01-000	EA	ADAPTER - BRASS - 1/2"MPT X 1/2"FPT
17C	140821-01-000	EA	TUBE - WATER SUPPLY - 3/8" X 24"
17C	140821-02-000	EA	TUBE - WATER SUPPLY - 3/8" X 30"
17C	140821-03-000	EA	TUBE - WATER SUPPLY - 3/8" X 36"
17C	140821-04-000	EA	TUBE - WATER SUPPLY - 3/8" X 48"
17C	140821-05-000	EA	TUBE - WATER SUPPLY - 3/8" X 54"
17C	140821-06-000	EA	TUBE - WATER SUPPLY - 3/8" X 60"
17C	140821-07-000	EA	TUBE - WATER SUPPLY - 3/8" X 72"
17C	140821-08-000	EA	TUBE - WATER SUPPLY - 1/2" X 24"
17C	140821-09-000	EA	TUBE - WATER SUPPLY - 1/2" X 36"
17C	140821-10-000	EA	TUBE - WATER SUPPLY - 1/2" X 48"
18C	142812-01-000	EA	ELBOW - BRASS - 1/2"MPT X 1/2"FPT
19C	145609-01-000	EA	PLUG - BRASS - 1/2" MPT/HEX HEAD

COPYRIGHT © 2009 WINNEBAGO INDUSTRIES INC.

WATER & DRAINAGE GROUP (CONTINUED)

WATER SYSTEM (CONTINUED)

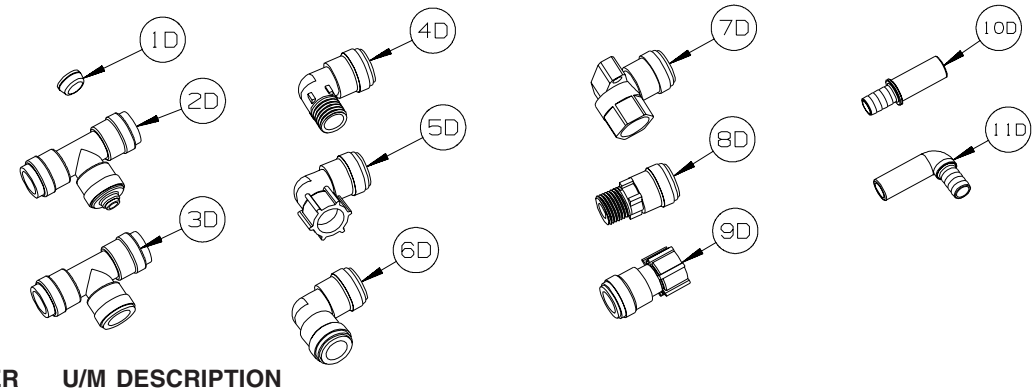

KEY	PART NUMBER	U/M	DESCRIPTION
1D	116473-01-000	EA	FERRIL - RUBBER SEALING - WATER LINE
2D	160949-01-000	EA	CONNECTOR - 1/2" X 1/2" X 1/4" REDUCER
3D	160949-02-000	EA	CONNECTOR - 1/2"CTS X 1/2"CTS X 1/2"CTS
4D	164906-01-000	EA	ELBOW - 90 DEGREE - 1/2" QUICK CONNECT X 1/2"MPT
5D	164906-02-000	EA	ELBOW - 90 DEGREE - 1/2" QUICK CONNECT X 1/2"FPT - SWIVEL
6D	164906-03-000	EA	ELBOW - 90 DEGREE - 1/2" X 1/2" QUICK CONNECTS
7D	164906-04-000	EA	ELBOW - 90 DEGREE - 1/2"CTS X 1/2"FPT
8D	164907-01-000	EA	ADAPTER - STRAIGHT - 1/2" QUICK CONNECT X 1/2"MPT
9D	164907-02-000	EA	ADAPTER - STRAIGHT - 1/2" QUICK CONNECT X 1/2"FPT/SWIVEL
10D	166212-01-000	EA	UNION - HOSE/BARB - CTS X 1/2"B - SEA TECH #3511-1008
11D	166212-02-000	EA	ELBOW - HOSE/BARB - CTS X 1/2"B - SEA TECH #3512-1008

COPYRIGHT © 2009 WINNEBAGO INDUSTRIES INC.

WATER & DRAINAGE GROUP (CONTINUED)

WATER SYSTEM (CONTINUED)

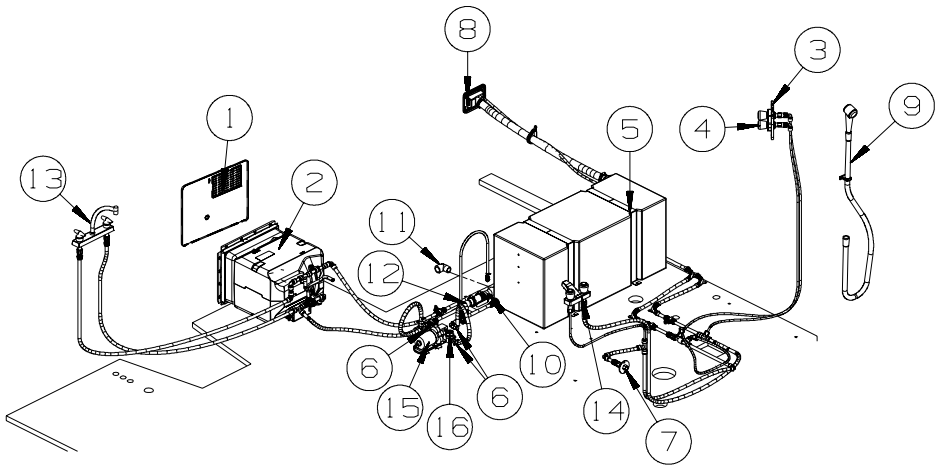

KEY	PART NUMBER	U/M	DESCRIPTION
1	125420-06-02A	EA	DOOR - WATER HEATER - 18" X 14.6" - BRIGHT WHITE
2*	051391-03-000	EA	WATER HEATER G6A-8E ELECTRONIC IGNITION
2*	145541-02-000	EA	WATER HEATER-6 GAL-GAS/ELEC/120'-REM IGN-W/HEAT EXC-4E - 53B
3	167738-02-01A	EA	PANEL - SHOWER FAUCET - SOFT WHITE
4	163269-01-02A	EA	FAUCET/SHOWER -.5"MPT W/1.9" INLET PIPES - CHROME
5	156167-05-000	EA	TANK - WATER - 36 GALLON - W/FITTINGS
	042989-03-000	EA	FITTING - SPINWELD - 1 1/4"NPT - PLASTIC
	042989-04-000	EA	FITTING - SPINWELD - 3/8"FPT - PLASTIC
	042989-05-000	EA	FITTING - SPINWELD - 1/2"FPT - PLASTIC
	042989-08-000	EA	FITTING - SPINWELD - 1"FPT - PLASTIC
	049032-01-000	EA	PATCH - SPINWELD - 1"ID - 1.9"OD - PLASTIC
6	163338-02-000	EA	ELBOW - WATER PUMP - 1/2" BARB X PORT
			FROM: 00-00-00 THRU: 08-24-08
6	123150-01-000	EA	ELBOW - 1/2"FPT X 1/2"BARB - SWIVEL - NOT ILLUSTRATED
			FROM: 08-25-08 THRU: 09-28-08
6	163338-02-000	EA	ELBOW - WATER PUMP - 1/2" BARB X PORT
			FROM: 09-29-08 THRU: 04-12-09
6	123150-01-000	EA	ELBOW - 1/2"FPT X 1/2"BARB - SWIVEL - NOT ILLUSTRATED
			FROM: 04-13-09 THRU: 99-99-99
7	010230-06-000	EA	FILL - CITY WATER - W/CHECK VALVE - MPT - BRUSHED ALUM
8	137169-01-01A	EA	WATER FILL/GRAVITY - W/DOOR - W/O LOCK - BRIGHT WHITE
	137169-02-01A	EA	ADAPTER/LOCK - (WASHER) F/GRAVITY WATERFILL
	110506-40-000	EA	CLIP-E, LOCK ASM - BRIGGS & STRATTON 93981
	110506-41-000	EA	WASHER-TENSION LOCK ASM - BRIGGS & STRATTON 37512
	110506-42-000	EA	NUT-LOCK ASM - BRIGGS & STRATTON 310878
	110506-43-000	EA	WASHER-FLAT, LOCK ASM - BRIGGS & STRATTON 82089
	110506-44-000	EA	GASKET-LOCK ASM - BRIGGS & STRATTON - #47701
	138637-52-000	EA	CASE/CYLINDER - LOCKING - W/O CAM/KEY - .9"
	138637-52-001	EA	CASE/CYLINDER - LOCKING - W/O CAM/KEY - .9"
	138637-52-002	EA	CASE/CYLINDER - LOCKING - W/O CAM/KEY - .9"
	138637-52-003	EA	CASE/CYLINDER - LOCKING - W/O CAM/KEY - .9"
	138637-52-004	EA	CASE/CYLINDER - LOCKING - W/O CAM/KEY - .9"
	138637-52-005	EA	CASE/CYLINDER - LOCKING - W/O CAM/KEY - .9"
	138637-52-006	EA	CASE/CYLINDER - LOCKING - W/O CAM/KEY - .9"
	138637-52-007	EA	CASE/CYLINDER - LOCKING - W/O CAM/KEY - .9"
	138637-52-008	EA	CASE/CYLINDER - LOCKING - W/O CAM/KEY - .9"
	138637-52-009	EA	CASE/CYLINDER - LOCKING - W/O CAM/KEY - .9"
	138637-62-000	EA	CAM - LATCHING - DOG LEG - 1" LONG
	144474-01-000	EA	ADAPTER - LOCK - 180 DEGREE
9	131383-01-02A	EA	SHOWER HEAD - W/60" HOSE & BRACKET - WHITE
10	132483-01-000	EA	VALVE/BALL - 1" - THREADED ENDS
11	132484-01-000	EA	ELBOW - 90 DEGREE - 1MPT X 1FPT - PLASTIC
12	132781-01-000	EA	ELBOW - 1.3" BARB X 1.3" BARB - 90 DEGREE - PLASTIC
13*	140117-02-01A	EA	FAUCET - GALLEY - DUAL LEVERS - CHROME/CLEAR
14*	148886-01-01A	EA	FAUCET - LAVATORY/DUAL CONTROL/4" CENTER - CHROME

COPYRIGHT © 2009 WINNEBAGO INDUSTRIES INC.

WATER & DRAINAGE GROUP (CONTINUED)

WATER SYSTEM (CONTINUED)

KEY	PART NUMBER	U/M	DESCRIPTION
15	163338-01-000	EA	PUMP - WATER - 2.9 GPM - W/O PORT FITTINGS
			FROM: 00-00-00 THRU: 08-24-08
15	160702-02-000	EA	PUMP - WATER - 2.8 GPM/55 PSI - 12 VOLT - #2088-422-175 - NOT ILLUSTRATED
			FROM: 08-25-08 THRU: 09-28-08
15	163338-01-000	EA	PUMP - WATER - 2.9 GPM - W/O PORT FITTINGS
			FROM: 09-29-08 THRU: 04-12-09
15	160702-02-000	EA	PUMP - WATER - 2.8 GPM/55 PSI - 12 VOLT - #2088-422-175 - NOT ILLUSTRATED
			FROM: 04-13-09 THRU: 99-99-99
16	163338-03-000	EA	STRAINER - WATER PUMP - QUICK CONNECT
			FROM: 00-00-00 THRU: 08-24-08
16	152925-01-01A	EA	FILTER - IN LINE - TWIST ON - 1/2" - BLACK - NOT ILLUSTRATED
			FROM: 08-25-08 THRU: 09-28-08
16	163338-03-000	EA	STRAINER - WATER PUMP - QUICK CONNECT
			FROM: 09-29-08 THRU: 04-12-09
16	152925-01-01A	EA	FILTER - IN LINE - TWIST ON - 1/2" - BLACK - NOT ILLUSTRATED
			FROM: 04-13-09 THRU: 99-99-99

***COMPONENT PARTS LISTED LATER IN THIS GROUP**

COPYRIGHT © 2009 WINNEBAGO INDUSTRIES INC.

WATER & DRAINAGE GROUP (CONTINUED)

COMPONENT PARTS FOR WATER SYSTEM

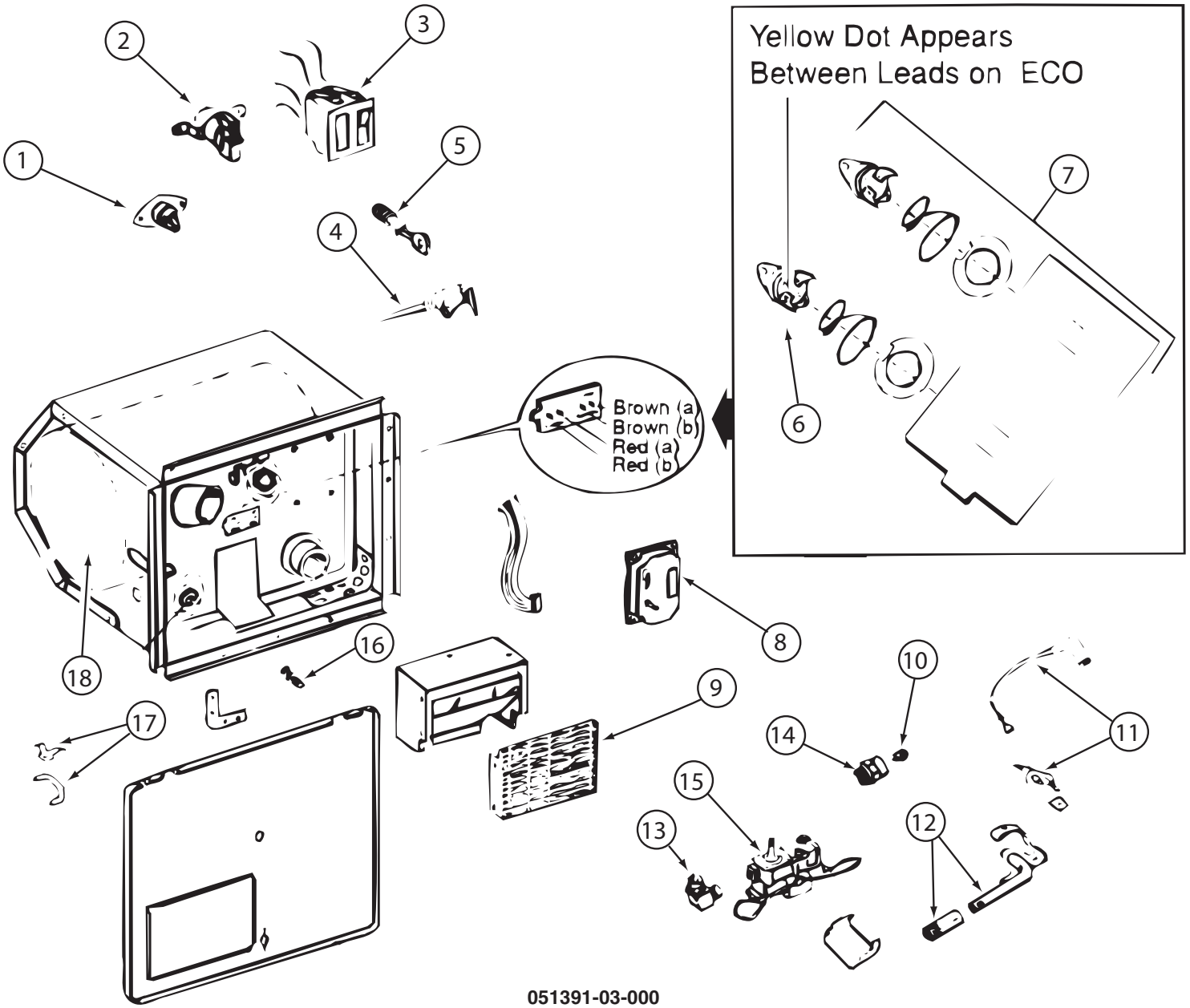

051391-03-000

KEY	PART NUMBER	U/M	DESCRIPTION	VENDOR NO.
3	051393-01-701	EA	SWITCH - REMOTE - W/LIGHT	91959
4	051391-01-704	EA	VALVE-RELIEF, 1/2" FITTING	91604
4	051391-03-701	EA	VALVE-RELIEF - 3/4" FITTING	90028
5	051391-01-705	EA	FASTENER-CAMLOCK	92609
6	051391-04-701	EA	THERMOSTAT 12V DC-120 PRESET	91470
7	051393-01-721	EA	THERMOSTAT W/ECO, 140 FRT MT	91447
9	051391-04-707	EA	KIT-EXHAUST, (FLUE & GASKET)	90960
10	051391-01-710	EA	ORIFICE-MAIN BURNER	92742
12	051391-04-703	EA	BURNER-MAIN/ELECTRONIC IG	91638
13	051391-01-714	EA	FITTING-ELBOW 45,3/8F X 3/8	MPT 1044
14	051391-03-700	EA	HOLDER-ORIFICE	91563
16	051391-01-715	EA	PLUG-DRAIN, 1 EA = 2 PER PKG	91857
17	051391-01-700	EA	HINGE KIT, (PIN & CLIP)	92568&92559
18	051391-04-706	EA	TANK-G6A-4E/6E/7E/8E-FRT.MT	91641 - INNER
	051391-01-717	EA	GRILLE-WATER HEATER DOOR	92640
	051393-01-723	EA	SWITCH - THERMAL CUTOUT 2/PK	93866 WAS 93853
	051393-01-724	EA	BOARD-CIRCUIT,SPADE TERMINAL	93865
	051393-01-725	EA	ELECTRODE-SGL SPADE CONNECT.	93868
	051393-01-726	EA	VALVE/SOLENOID - W/O BRACKET	93870
	111129-01-711	EA	BRACKET-CORNER, SET OF FOUR	91928

CONTACT WINNEBAGO PARTS SALES FOR UNLISTED COMPONENT(S)

COPYRIGHT © 2009 WINNEBAGO INDUSTRIES INC.

WATER & DRAINAGE GROUP (CONTINUED)

COMPONENT PARTS FOR WATER SYSTEM (CONTINUED)

140117-02-01A

KEY	PART NUMBER	U/M	DESCRIPTION	VENDOR NO.
	140117-02-700	EA	CARTRIDGE	9-40-5-ORLH(PAIR)

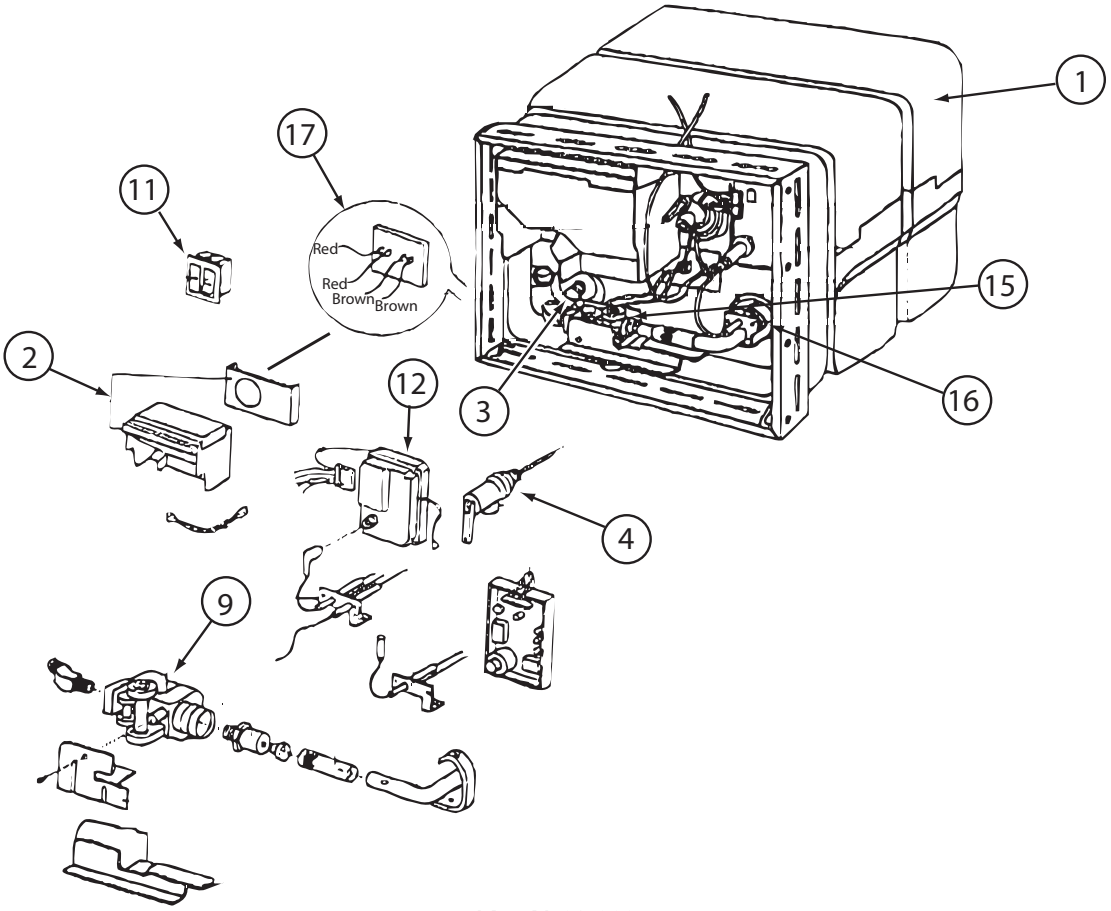

145541-02-000

KEY	PART NUMBER	U/M	DESCRIPTION	VENDOR NO.
1	145541-02-700	EA	TANK/SERVICE KIT PCS- 6 GAL	91053
2	051391-04-707	EA	KIT-EXHAUST, (FLUE & GASKET)	90960
3	051391-01-715	EA	PLUG-DRAIN, 1 EA = 2 PER PKG	91857
4	051391-01-704	EA	VALVE-RELIEF, 1/2" FITTING	91604
4	051391-03-701	EA	VALVE-RELIEF - 3/4" FITTING	90028
9	051393-01-726	EA	VALVE-SOLENOID - W/O BRACKET	93870
11	051393-01-701	EA	SWITCH - REMOTE - W/LIGHT	91959
11	145541-01-701	EA	SWITCH - ON/OFF - WHITE	91859
12	145541-01-702	EA	CIRCUIT BOARD	91226
15	145541-01-703	EA	SWITCH - THERMAL CUT OFF	93866
16	051393-01-725	EA	ELECTRODE-SGL SPADE CONNECT.	93868
17	051393-01-721	EA	THERMOSTAT W/ECO, 140 FRT MT	91447
	051391-05-706	EA	ELEMENT-HEATING 1500 WATT	92249 W/GASKET
	145541-01-704	EA	RELAY	90061
	145541-02-701	EA	JUNCTION BOX(PLASTIC) 6 GAL	91222
			CONTACT WINNEBAGO PARTS SALES FOR UNLISTED COMPONENT(S)	

148886-01-01A, 148886-02-02A

KEY	PART NUMBER	U/M	DESCRIPTION	VENDOR NO.
	075240-05-700	EA	CARTRIDGE - WASHERLESS	9-P42

COPYRIGHT © 2009 WINNEBAGO INDUSTRIES INC.

WINDOWS & VENTS GROUP

WINDOWS & VENTS LAYOUT

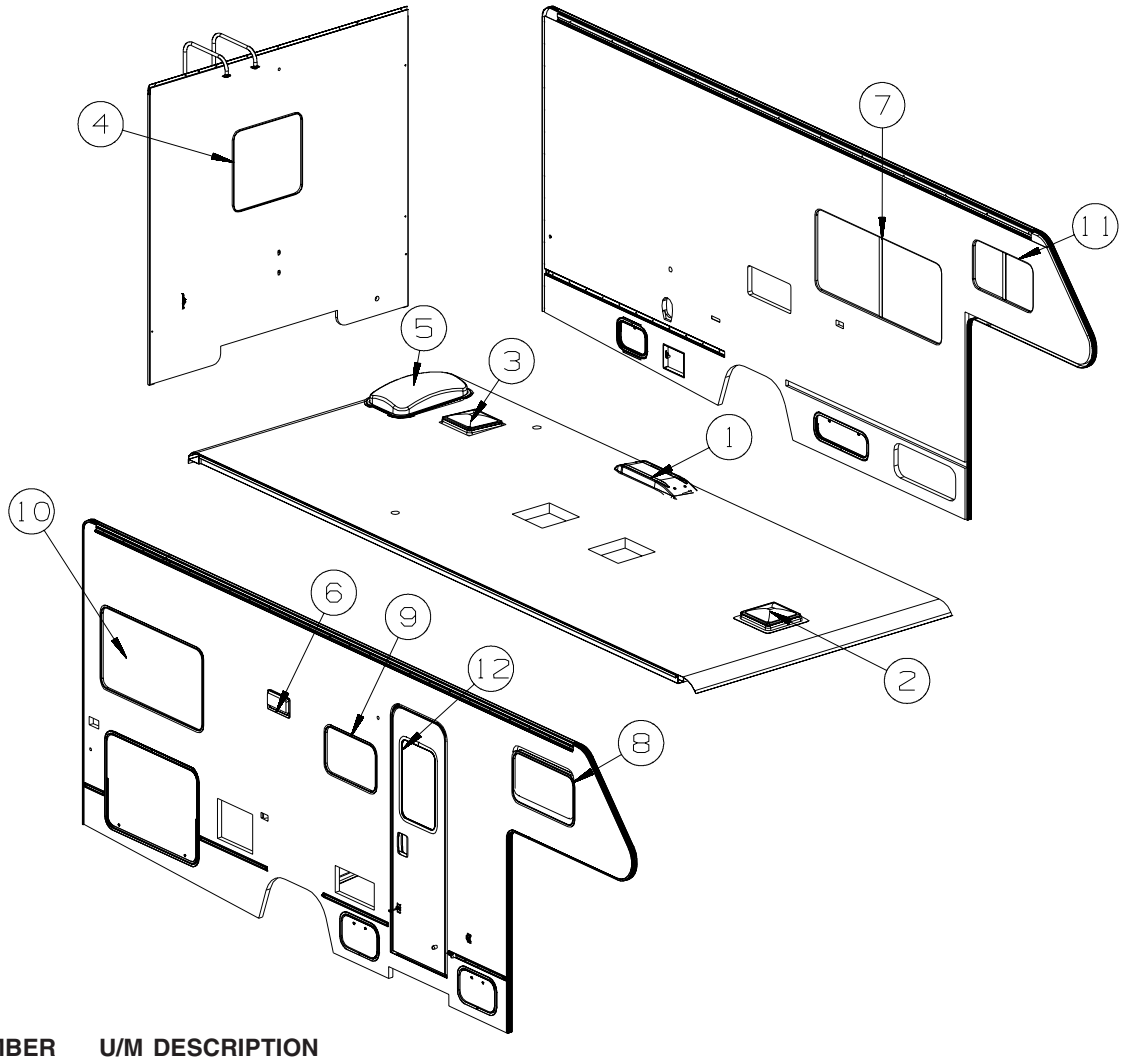

KEY	PART NUMBER	U/M	DESCRIPTION
1	149508-01-02A	EA	CAP - ROOF/REFRIGERATOR VENT - WHITE
1	149508-02-02A	EA	BASE - ROOF/REFRIGERATOR VENT - BRIGHT WHITE
2*	122882-01-01A	EA	VENT - ROOF - NONPOWERED - W/O INSIDE GARNISH
	009440-01-000	EA	GEAR/ARM - LIFT - ROOF VENT COVER
2	122882-07-01A	EA	GARNISH - ROOF VENT - 2.5" TO 4.1"
3*	122882-02-01A	EA	VENT - ROOF - W/FAN - W/O INSIDE GARNISH - UL
3*	122882-03-01A	EA	VENT - ROOF - W/FAN - W/O INSIDE GARNISH - CSA - 265
	009440-01-000	EA	GEAR/ARM - LIFT - ROOF VENT COVER
	048648-01-000	EA	MOTOR/ROOF VENT - W/RESISTER - 1/8"SHAFT - 12VOLT
	048649-01-000	EA	FAN BLADE - ROOF VENT - 6 BLADED - 6"RADIUS
3	122882-07-01A	EA	GARNISH - ROOF VENT - 2.5" TO 4.1"
4*	151075-02-01A	EA	WINDOW - ESCAPE/PICTURE - 26.3" X 26.7" - BLK/BLK
5	138372-01-02B	EA	TRIM - CORNER - SKYLIGHT - E-COATED
5	138379-03-01A	EA	PANEL/SKYLIGHT OTR - RECT/6"H CTR DOME - 18.4"X 29.5"- WHT
5	156693-01-01A	EA	PANEL/SKYLIGHT - INNER
6	147821-01-01A	EA	VENT - EXHAUST/RANGE HOOD - BRIGHT WHITE
6	147821-02-01A	EA	SHROUD - EXHAUST VENT/RANGE HOOD - BRIGHT WHITE
7*	164922-05-01A	EA	WINDOW - HORIZ SLIDER/LH - 26.1"H X 59.7"W - CLEAR/BLK/BLK
8*	164922-08-01A	EA	WINDOW - HORIZ SLIDER/RH - 15.7"H X 28.4"W - CLEAR/BLK/BLK
9*	164922-14-01A	EA	WINDOW - HORIZ SLIDER/RH - 15"H X 23.7"W - CLEAR/BLK/BLK
10*	164922-11-01A	EA	WINDOW - HORIZ SLIDER/RH - 26.1"H X 47.7"W - CLEAR/BLK/BLK
11*	164922-09-01A	EA	WINDOW - HORIZ SLIDER/LH - 15.7"H X 28.4"W - CLEAR/BLK/BLK
12	117053-08-S95	EA	WINDOW - PICTURE/FROSTED - W/O TRIM - 17" X 26.4"
	002181-34-000	EA	GLASS - PICTURE WINDOW - 25.8"W X 16.4"H - FROSTED
	087561-01-000	FT	SEAL - GLASS - EXTERIOR - .5" WIDE - VINYL BLACK
12	117054-02-03A	EA	TRIM/RETAINER - INSIDE - 16.9" X 26.2" - BLACK

***COMPONENT PARTS LISTED LATER IN THIS GROUP**

COPYRIGHT © 2009 WINNEBAGO INDUSTRIES INC.

WINDOWS & VENTS GROUP (CONTINUED)

COMPONENT PARTS FOR WINDOWS & VENTS LAYOUT

122882-01-01A

KEY	PART NUMBER	U/M	DESCRIPTION	VENDOR NO.
	064470-01-700	EA	COVER - VENT	J7291
	064470-01-701	EA	SLIDE BAR - VENT LID	JRP1291B
	122882-01-700	EA	HANDLE - CRANK - BLACK	90128
	122882-01-701	EA	SCREEN	JRP-1124-B
	122882-01-702	EA	HANDLE - CRANK - WHITE	JRP1031B
	122882-01-703	EA	SEAL - DOME - 48"	JRP2111B

122882-02-01A, 122882-03-01A

KEY	PART NUMBER	U/M	DESCRIPTION	VENDOR NO.
	064470-01-700	EA	COVER - VENT	J7291
	064470-01-701	EA	SLIDE BAR - VENT LID	JRP1291B
	110051-03-700	EA	SWITCH-BLACK/PUSH BUTTON	27-0164
	122882-01-700	EA	HANDLE - CRANK - BLACK	90128
	122882-01-701	EA	SCREEN	JRP-1124-B
	122882-01-702	EA	HANDLE - CRANK - WHITE	JRP1031B

COPYRIGHT © 2009 WINNEBAGO INDUSTRIES INC.

WINDOWS & VENTS GROUP (CONTINUED)

COMPONENT PARTS FOR WINDOWS & VENTS LAYOUT (CONTINUED)

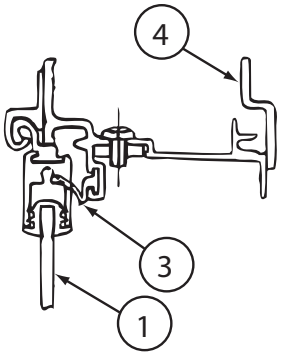

CROSS SECTION D-D

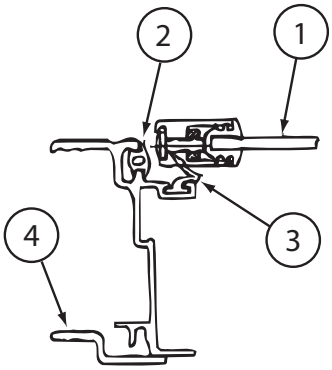

CROSS SECTION A-A

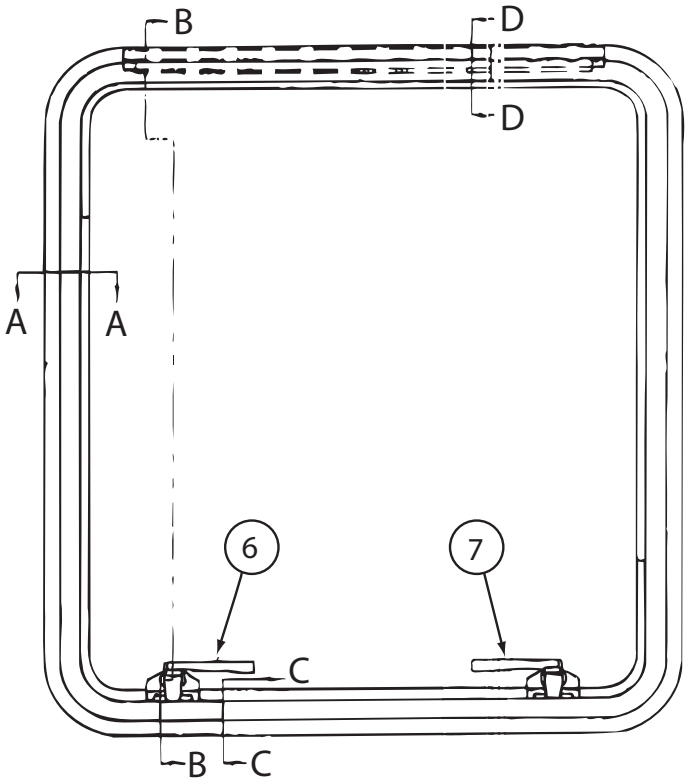

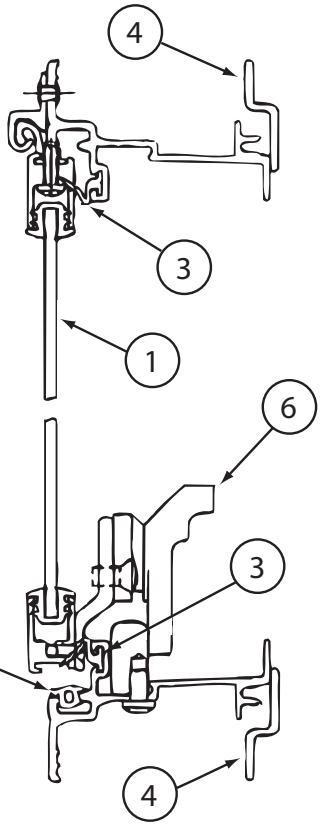

CROSS SECTION B-B

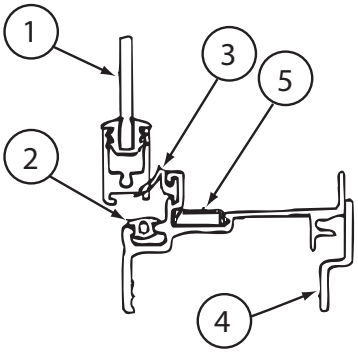

CROSS SECTION C-C

151075-02-01A

KEY	PART NUMBER	U/M	DESCRIPTION	VENDOR NO
1	151075-02-700	EA	GLASS-STATIONARY-SUB ASM	H955G9
2	116976-01-702	FT	FILLER PLUG	132-016065
3	100322-01-701	FT	SEAL-VENT	122-016071
4	151075-02-701	EA	RETAINER - TRIM	H955-53
5	108929-01-706	EA	COVER - DRAIN SLOT	132-016064
6	137867-05-707	EA	LOCK/CAM - LEFT	182-011294
7	137867-05-706	EA	LOCK/CAM - RIGHT	182-011293

COPYRIGHT © 2009 WINNEBAGO INDUSTRIES INC.

WINDOWS & VENTS GROUP (CONTINUED)

COMPONENT PARTS FOR WINDOWS & VENTS LAYOUT (CONTINUED)

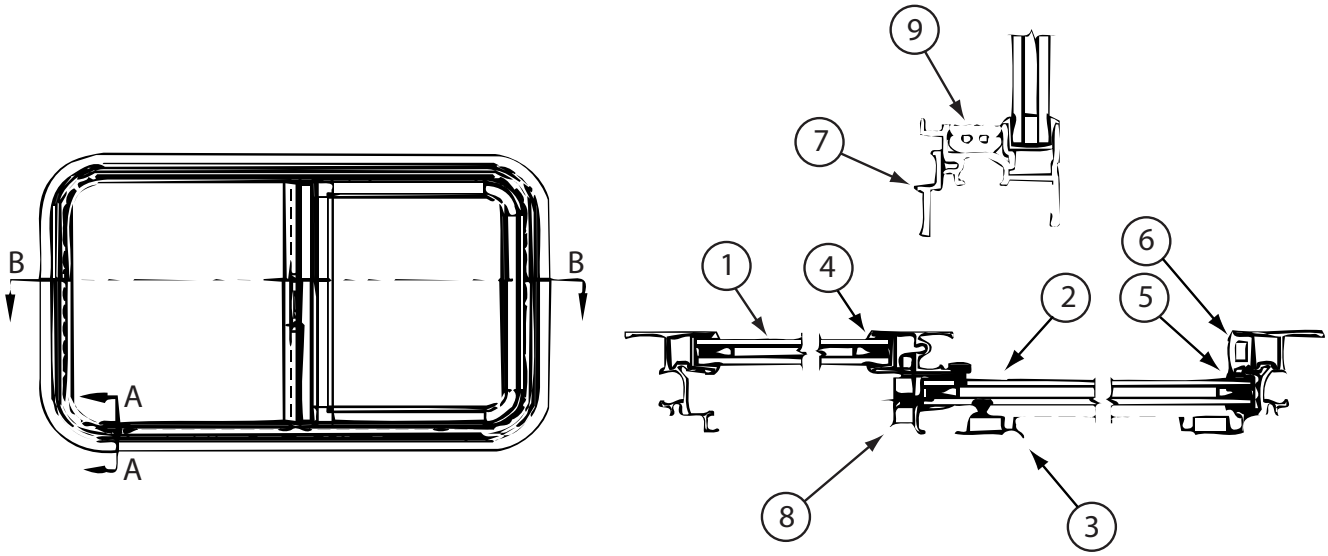

164922-04-01A/03A, 164922-05-01A

KEY	PART NUMBER	U/M	DESCRIPTION	VENDOR NO.
1	098647-27-702	EA	GLASS - STATIONARY	096-017868
2	098647-27-703	EA	GLASS-SLIDING W/SASH & LATCH	H287-C8
3	098647-23-704	EA	SCREEN ASM - W/SEALS & CLIPS	410-019066
4	098644-01-705	FT	GLAZING - STRIP	132-010231
5	098644-01-708	FT	CHANNEL - RUN PIERCED	122-016543
6	098644-01-716	FT	PLUG - FILLER	132-014470
7	098647-27-704	EA	RETAINER - TRIM	H287-66
8	098644-01-700	EA	LATCH - REPAIR KIT (BLACK)	B801-CK
8	098647-54-701	EA	LATCH REPAIR KIT (RED)	B081-CK
9	098644-01-719	EA	STOP - SLIDER GLASS	132-014203
	098644-01-706	FT	WEATHERSTRIP-GLASS(FIN SEAL)	171-010668
	098644-01-710	FT	TRACK - SCREEN SPACER	132-017135
	098644-01-711	FT	WEATHERSTRIP-SCRN(FUZZY)BLK	171-017245/016965
	098644-01-717	FT	SPLINE - SCREEN	132-004716
	125582-01-701	EA	CLIP - SCREEN - PLASTIC	130-005153

164922-08-01A, 164922-09-01A/03A

KEY	PART NUMBER	U/M	DESCRIPTION	VENDOR NO.
1	098647-31-702	EA	GLASS - STATIONARY	096-019299
2	098647-31-703	EA	GLASS-SLIDING W/SASH & LATCH	H425-C8
3	098647-31-704	EA	SCREEN ASM - W/SEALS & CLIPS	410-019128
4	098644-01-705	FT	GLAZING - STRIP	132-010231
5	098644-01-708	FT	CHANNEL - RUN PIERCED	122-016543
6	098644-01-716	FT	PLUG - FILLER	132-014470
7	098647-31-705	EA	RETAINER - TRIM	CH29-66
8	098644-01-700	EA	LATCH - REPAIR KIT (BLACK)	B801-CK
8	098647-54-701	EA	LATCH REPAIR KIT (RED)	B081-CK
9	098644-01-719	EA	STOP - SLIDER GLASS	132-014203
	098644-01-706	FT	WEATHERSTRIP-GLASS(FIN SEAL)	171-010668
	098644-01-710	FT	TRACK - SCREEN SPACER	132-017135
	098644-01-711	FT	WEATHERSTRIP-SCRN(FUZZY)BLK	171-017245/016965
	098644-01-717	FT	SPLINE - SCREEN	132-004716
	125582-01-701	EA	CLIP - SCREEN - PLASTIC	130-005153

COPYRIGHT © 2009 WINNEBAGO INDUSTRIES INC.

WINDOWS & VENTS GROUP (CONTINUED)

COMPONENT PARTS FOR WINDOWS & VENTS LAYOUT (CONTINUED)

164922-11-01A

KEY	PART NUMBER	U/M	DESCRIPTION	VENDOR NO.
1	098647-38-702	EA	GLASS - STATIONARY	096-017854
2	098647-38-703	EA	GLASS-SLIDING W/SASH & LATCH	H320-C8
3	098647-38-704	EA	SCREEN ASM - W/SEALS & CLIPS	410-019063
4	098644-01-705	FT	GLAZING - STRIP	132-010231
5	098644-01-708	FT	CHANNEL - RUN PIERCED	122-016543
6	098644-01-716	FT	PLUG - FILLER	132-014470
7	098647-38-705	EA	RETAINER - TRIM	H303-66
8	098644-01-700	EA	LATCH - REPAIR KIT (BLACK)	B801-CK
8	098647-54-701	EA	LATCH REPAIR KIT (RED)	B081-CK
9	098644-01-719	EA	STOP - SLIDER GLASS	132-014203
	098644-01-706	FT	WEATHERSTRIP-GLASS(FIN SEAL)	171-010668
	098644-01-710	FT	TRACK - SCREEN SPACER	132-017135
	098644-01-711	FT	WEATHERSTRIP-SCRN(FUZZY)BLK	171-017245/016965
	098644-01-717	FT	SPLINE - SCREEN	132-004716
	125582-01-701	EA	CLIP - SCREEN - PLASTIC	130-005153

164922-14-01A/03A, 164922-17-01A

KEY	PART NUMBER	U/M	DESCRIPTION	VENDOR NO.
1	098647-49-700	EA	GLASS - STATIONARY	096-012066
2	098647-67-700	EA	GLASS-SLIDING W/SASH & LATCH	B969C9
3	112795-56-702	EA	SCREEN ASM - W/SEALS & CLIPS	410-019414
4	098644-01-705	FT	GLAZING - STRIP	132-010231
5	098644-01-708	FT	CHANNEL - RUN PIERCED	122-016543
6	098644-01-716	FT	PLUG - FILLER	132-014470
7	112795-56-704	EA	RETAINER - TRIM - BLACK	B969-66
8	098644-01-700	EA	LATCH - REPAIR KIT (BLACK)	B801-CK
8	098647-54-701	EA	LATCH REPAIR KIT (RED)	B081-CK
9	098644-01-719	EA	STOP - SLIDER GLASS	132-014203
	098644-01-706	FT	WEATHERSTRIP-GLASS(FIN SEAL)	171-010668
	098644-01-710	FT	TRACK - SCREEN SPACER	132-017135
	098644-01-711	FT	WEATHERSTRIP-SCRN(FUZZY)BLK	171-017245/016965
	098644-01-717	FT	SPLINE - SCREEN	132-004716
	125582-01-701	EA	CLIP - SCREEN - PLASTIC	130-005153

COPYRIGHT © 2009 WINNEBAGO INDUSTRIES INC.