2006
SIGHTSEER
D-SERIES
WFD33T

PORTSMOUTH OAK

T53 JASPER PARK
T54 GINGER SNAP
T55 STONE BROOK
TT0 SEAGLASS SLATE
TT2 BEACHGRASS BLUE
TT4 WILLOW GREEN
TT6 OYSTER BAY
TT8 OCEAN PACIFIC
TU0 JAGGED RIVER
TU2 TRUFFLE

SIERRA MAPLE

TL0 JASPER PARK
TL1 GINGER SNAP
TL2 STONE BROOK
TT1 SEAGLASS SLATE
TT3 BEACHGRASS BLUE
TT5 WILLOW GREEN
TT7 OYSTER BAY
TT9 OCEAN PACIFIC
TU1 JAGGED RIVER
TU3 TRUFFLE

DASH ACCENT COLORS

T53,T55,TL0,TL2,TT0,TT1,TT2,TT3,TT4,TT5,TT6,TT7,TT8,TT9,TU0,TU1,TU2,TU3 - RIVERSTONE
T54, TL1 - CASHMERE

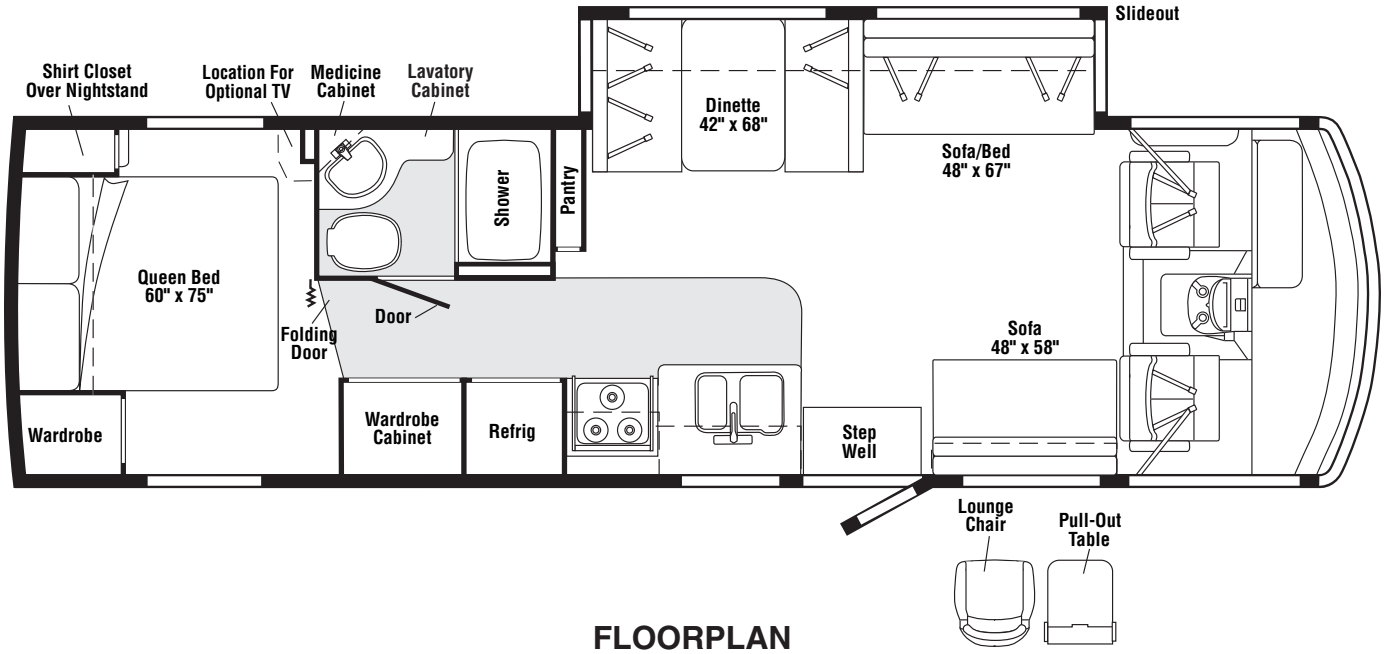

FLOORPLAN

COPYRIGHT © 2007 WINNEBAGO INDUSTRIES INC.

CONTENTS

FLOORPLAN 1
ACCESSORIES GROUP 6
OPERATORS MANUAL 6
AUDIO VIDEO GROUP 7
RADIO SYSTEM 7
REAR MONITOR 7
CABINET & APPLIANCE GROUP 8
CABINET & APPLIANCE LAYOUT 8
COMPONENT PARTS FOR CABINET & APPLIANCE LAYOUT 20
114030-04-01A 20
121568-06-01A, 121568-07-01A, 121568-08-01A 22
135065-03-01A, 135065-03-03A, 135065-04-01A 27
136354-01-01A, 136354-02-01A 29
136354-05-01A, 136354-05-02A 30
136354-06-01A, 136354-06-02A 30
150606-04-01A, 150606-04-02A 30
151277-01-01A, 151277-02-01A 31
151277-03-01A, 151279-01-01A, 151279-02-01A/02A, 151279-03-01A 34
CHASSIS GROUP 37
FRAME 37
FRONT END 38
EXHAUST 41
HITCH 46
FUEL 47
HYDRAULIC LEVELING 50
SPARE TIRE 53
SUSPENSION 54
COMPONENT PARTS FOR SUSPENSION 54
122756-04-000 54
WHEEL, TIRE, COVERS &/OR LINERS 55
COMPONENT PARTS FOR WHEEL, TIRE, COVERS &/OR LINERS 55
109443-06-000 55
109443-08-000 55
145580-03-000 55
145580-04-000 55
154672-01-000 56
BRAKE 56
CURTAIN & CUSHION GROUP 57
NOTICE 57
CUSHION LAYOUT 58
BUCKET SEATS 59
LOUNGE CHAIR 62
SOFA 63
WINDOW TREATMENT 65
HARDWARE 67
ACCESSORIES 68
FABRICS 69
DRIVERS COMPARTMENT GROUP 71
DASH 71
MOTOR COVER 72
BEVERAGE TRAY 74
FRONT INTERIOR 75
COMPONENT PARTS FOR FRONT INTERIOR 78
091990-04-01A 78
CABINETS 79

COPYRIGHT © 2007 WINNEBAGO INDUSTRIES INC.

CONTENTS (CONTINUED)

ELECTRICAL GROUP 81
110V BODY WIRING 81
12V BODY WIRING 83
EXTERIOR LAMPS 90
FRONT END 92
FRONT TV/VCR 94
COMPONENT PARTS FOR WIRING 95
076319-23-000 95
076319-25-000 95
086231-10-000 96
087694-01-000 96
097917-01-06A 96
115632-03-01A 96
121935-01-01A 96
134940-01-01A 96
134940-06-01A 97
137135-02-000 98
137417-01-01A, 137417-03-01A 99
137417-05-01A 99
137417-06-01A 99
145641-02-000, 145641-04-000 99
148231-01-000 99
145641-03-000 99
148230-01-000, 148230-02-000 99
148230-03-000 99
148231-01-000 99
150089-01-000 99
152441-01-000 99
155619-01-000 99
CIRCUIT BREAKERS, FUSES & RELAYS 100
CONVERTER, INVERTER, LOAD CENTERS 101
BOXES & CORDS 102
WIRE ASSEMBLIES 102
CONNECTORS & CONDUIT 103
CHASSIS 105
EXTERIOR BODY GROUP 106
GRAPHICS & PAINT 106
PANELS & TRIMS 112
COMPONENT PARTS FOR PANELS & TRIMS 115
106015-12-01A 115
106015-13-01A 115
106015-14-01A 115
106015-15-01A 115
FRONT END 116
LADDER 118
STRUCTURAL COMPONENTS 118
AWNINGS 119
COMPONENT PARTS FOR AWNINGS 120
113874-01-02A 120
EXTERIOR DOORS & COMPARTMENTS GROUP 121
DOOR & COMPARTMENT LAYOUT 121
COMPONENT PARTS FOR DOOR & COMPARTMENT LAYOUT 126
084103-08-000 126
094707-03-01A 126
094707-04-01A 127
110506-A1-000, 110506-A2-000, 110506-26-000, 110506-27-000, 110506-36-000 127
142226-02-01A 127
COMPARTMENT DOOR PIECE PARTS 128
ENTRY 130
SCREEN 131
LATCH - ENTRY 132

COPYRIGHT © 2007 WINNEBAGO INDUSTRIES INC.

CONTENTS (CONTINUED)

EXTERIOR SLIDEOUT GROUP 133
FRONT 133
COMPONENT PARTS FOR FRONT 136
148875-01-000, 148875-02-000 136
GENERATOR GROUP 137
GAS 137
HEATING & A/C GROUP 138
AUTOMOTIVE 138
COMPONENT PARTS FOR AUTOMOTIVE 140
103930-39-000 140
103930-44-000 140
103930-45-000 141
103930-46-000 141
103930-47-000 141
103930-55-000 142
FURNACE 143
COMPONENT PARTS FOR FURNACE 144
139980-02-000 144
143563-02-000 146
REAR HEATER 148
COMPONENT PARTS FOR REAR HEATER 148
084405-01-000 148
ROOF 148
COMPONENT PARTS FOR ROOF 149
131184-01-01A 149
131184-05-01A 150
131186-02-01A 151
131187-03-01A 152
131187-04-01A 153
131188-03-01A 154
131188-04-01A 155
INTERIOR FINISH GROUP 156
MOLDINGS & TRIMS 156
PANELING & LAMINATES 165
INTERIOR TRIM LAYOUT 167
COMPONENT PARTS FOR INTERIOR TRIM LAYOUT 169
094499-02-000 169
115011-03-02A 169
131595-01-01A, 131595-05-01A, 131595-10-01A 170
FLOOR COVERINGS 170
HARDWARE 171
LABELS GROUP 177
LP GROUP 182
LP SYSTEM 182
COMPONENT PARTS FOR LP SYSTEM 182
144116-04-000 182
SEALANTS & FASTENERS GROUP 183
SEALANTS & ADHESIVES 183
BOLTS, NUTS AND WASHERS 184
SCREWS 186
CLAMPS, CLIPS, GROMMETS, RIVETS & PLUGS 188
MISCELLANEOUS FASTENERS 190

COPYRIGHT © 2007 WINNEBAGO INDUSTRIES INC.

CONTENTS (CONTINUED)

WATER & SEWAGE GROUP 191
DRAINAGE SYSTEM 191
COMPONENT PARTS FOR DRAINAGE SYSTEM 193
096927-01-02A 193
147421-01-01A, 147421-02-01A 193
WATER SYSTEM 194
COMPONENT PARTS FOR WATER SYSTEM 200
051391-03-000 200
075240-05-000 201
075241-04-000, 075241-05-000, 075241-06-000 201
098607-01-000 201
144215-01-000 201
144215-02-000 201
145541-02-000 202
WINDOW & VENTS GROUP 203
WINDOW & VENT LAYOUT 203
COMPONENT PARTS FOR WINDOWS & VENT LAYOUT 205
098644-13-01A 205
098647-33-02A 206
098647-41-02A 207
098647-47-02A 207
098647-63-01A 207
098647-69-01A 208
122882-01-01A 209
122882-02-01A, 122882-03-01A 209
123780-03-01A 210
145573-01-01A 211
145573-02-01A 212
150648-04-01A 213
150648-06-01A 213
150648-07-01A 214
150648-11-01A 214
150648-12-01A 214
150649-07-01A 215
150651-01-01A 216
151069-01-01A 217
151069-02-01A 218
WINDSHIELD & WIPER GROUP 219
WINDSHIELD 219
WIPER 220
COMPONENT PARTS FOR WIPER 220
149401-01-000,149401-02-000 220
149402-03-000 & 149402-04-000 220

COPYRIGHT © 2007 WINNEBAGO INDUSTRIES INC.

ACCESSORIES GROUP

OPERATORS MANUAL

KEY	PART NUMBER	U/M	DESCRIPTION
	129079-01-01A	EA	CASE - VINYL/BLACK-EXPANDABLE ACCORDION SIDES-7"WX9"HX14"L
	132000-17-006	EA	MANUAL/OWNER - SIGHTSEER - 2006
	155005-17-006	EA	MANUAL/OWNER - SUPPLEMENT - VOLUME I - SIGHTSEER - 2006
	155005-40-006	EA	MANUAL/OWNER - SUPPLEMENT - VOLUME II - SIGHTSEER - 2006
	152630-01-000	DW	TOP LEVEL - D, 2006

COPYRIGHT © 2007 WINNEBAGO INDUSTRIES INC.

AUDIO VIDEO GROUP

RADIO SYSTEM

KEY	PART NUMBER	U/M	DESCRIPTION
	135420-10-000	EA	REMOTE CONTROL/RADIO (CREDIT CARD SIZE)
			FROM: 00-00-00 THRU: 05-29-05
	135420-19-000	EA	REMOTE CONTROL/RADIO (CREDIT CARD SIZE)
			FROM: 05-30-05 THRU: 99-99-99
	135420-11-000	EA	REMOTE CONTROL/RADIO (STEERING WHEEL MOUNT)
			FROM: 00-00-00 THRU: 05-29-05
	135420-18-000	EA	REMOTE CONTROL/RADIO (STEERING WHEEL MOUNT)
			FROM: 05-30-05 THRU: 99-99-99
	135420-13-000	EA	RADIO-AM/FM/CASS/CD COMBO-AUX/CD CHANGER INPUT-IR REMOTE
			FROM: 00-00-00 THRU: 05-29-05
	135420-15-000	EA	RADIO-AM/FM/CD/SIRIUS SATELLITE READY-W/O REMOTES/WIRE ASM
			FROM: 05-30-05 THRU: 99-99-99
	135420-14-000	EA	RECEIVER (EYE) - INFRARED
	135420-07-000	EA	MOUNTING KIT - RADIO - A-BODY

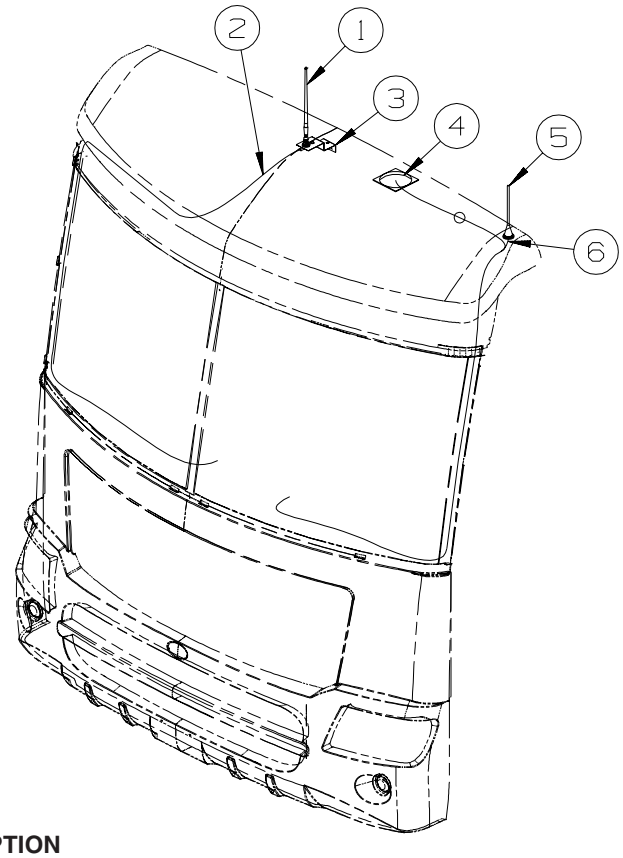

KEY	PART NUMBER	U/M	DESCRIPTION
1	090944-02-000	EA	ANTENNA - RADIO - 16" RUBBER - W/O LEAD WIRE
2	090944-03-000	EA	CABLE - ANTENNA
3	115916-01-01B	EA	BRACKET - ANTENNA MOUNT
4	152780-01-000	EA	ANTENNA/SATELLITE - RADIO/SIRIUS - SATELLITE RADIO
			FROM: 00-00-00 THRU: 12-11-05
4	158494-01-000	EA	ANTENNA/SATELLITE - RADIO/SIRIUS - SATELLITE RADIO
			FROM: 12-12-05 THRU: 99-99-99
5	123256-01-000	EA	ANTENNA - CB - W/O CABLE
6	123256-02-000	EA	CABLE - CB - COAX

REAR MONITOR

KEY	PART NUMBER	U/M	DESCRIPTION
	144677-06-000	EA	MONITOR/BLACK & WHITE - 7" - 3 PIN/MECH CONTROLS - RESIZED
	144677-04-000	EA	CAMERA - REAR VIEW W/BRACKET
	136514-02-000	EA	CABLE - MONITOR/CAMERA

COPYRIGHT © 2007 WINNEBAGO INDUSTRIES INC.

CABINET & APPLIANCE GROUP

CABINET & APPLIANCE LAYOUT

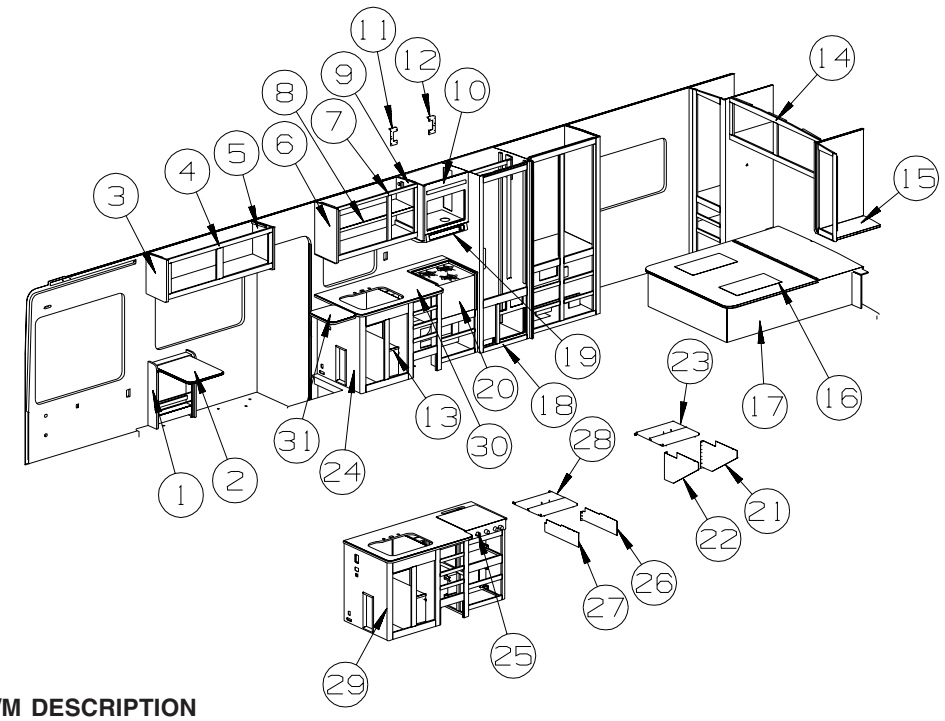

KEY	PART NUMBER	U/M	DESCRIPTION
1	136683-01-T53	EA	CABINET - W/PULLOUT TABLE - 19.7" X 23.8" - PORTSMOUTH OAK (T53)
1	136683-01-T54	EA	CABINET - W/PULLOUT TABLE - 19.7" X 23.8" - PORTSMOUTH OAK (T54)
1	136683-01-T55	EA	CABINET - W/PULLOUT TABLE - 19.7" X 23.8" - PORTSMOUTH OAK (T55)
1	136683-01-TL0	EA	CABINET - W/PULLOUT TABLE - 19.7" X 23.8" - SIERRA MAPLE (TL0)
1	136683-01-TL1	EA	CABINET - W/PULLOUT TABLE - 19.7" X 23.8" - SIERRA MAPLE (TL1, TL2)
2	136683-16-N75	EA	TABLE TOP ONLY - F/PULLOUT TABLE - PORTSMOUTH OAK
2	136683-16-SR0	EA	TABLE TOP ONLY - F/PULLOUT TABLE - SIERRA MAPLE
3	103128-02-M22	EA	END CAP - OVERHEAD CABINET - LEFT HAND - PORTSMOUTH OAK
3	103128-02-SJ0	EA	END CAP - OVERHEAD CABINET - LEFT HAND - SIERRA MAPLE
4	155719-01-T53	EA	CABINET - OVERHEAD/FRONT - W/O DOORS/HDW - PORTSMOUTH OAK
4	155719-01-TL0	EA	CABINET - OVERHEAD/FRONT - W/O DOORS/HDW - SIERRA MAPLE
5	103128-01-M22	EA	END CAP - OVERHEAD CABINET - RIGHT HAND - PORTSMOUTH OAK
5	103128-01-SJ0	EA	END CAP - OVERHEAD CABINET - RIGHT HAND - SIERRA MAPLE
6	081319-20-M24	EA	END CAP - OVERHEAD CABINET - PORTSMOUTH OAK
6	081319-20-SJ0	EA	END CAP - OVERHEAD CABINET - SIERRA MAPLE
7	143234-01-P31	EA	CABINET - OVERHEAD/GALLEY - W/O DOORS/HDW - PORTSMOUTH OAK
7	143234-01-SJ0	EA	CABINET - OVERHEAD/GALLEY - W/O DOORS/HDW - SIERRA MAPLE
7	143234-02-R28	EA	CABINET - GALLEY - W/O DOORS/HDW - PORTSMOUTH OAK - MICROWAVE/CONVECTION OVEN FROM: 00-00-00 THRU: 11-17-05
7	143234-03-T53	EA	CABINET - GALLEY - W/O DOORS/HDW - PORTSMOUTH OAK - MICROWAVE/CONVECTION OVEN FROM: 11-18-05 THRU: 99-99-99
7	143234-02-SJ0	EA	CABINET - GALLEY - W/O DOORS/HDW - SIERRA MAPLE - MICROWAVE/CONVECTION OVEN FROM: 00-00-00 THRU: 11-17-05
7	143234-03-TL0	EA	CABINET - GALLEY - W/O DOORS/HDW - SIERRA MAPLE - MICROWAVE/CONVECTION OVEN FROM: 11-18-05 THRU: 99-99-99
8	143234-13-P31	EA	SHELF - W/PLASTIC EDGE MOLDING - PORTSMOUTH OAK
8	143234-13-SJ0	EA	SHELF - W/PLASTIC EDGE MOLDING - SIERRA MAPLE
9	081319-14-M24	EA	END CAP - OVERHEAD CABINET - PORTSMOUTH OAK
9	081319-14-SJ0	EA	END CAP - OVERHEAD CABINET - SIERRA MAPLE
9	140307-40-R13	EA	END CAP - OVERHEAD CABINET - PORTSMOUTH OAK - MICROWAVE/CONVECTION OVEN
9	140307-40-SJ0	EA	END CAP - OVERHEAD CABINET - SIERRA MAPLE - MICROWAVE/CONVECTION OVEN
10	145568-01-R28	EA	CABINET - OVERHEAD/MICROWAVE - W/O DOORS/HARDWARE - PORTSMOUTH OAK
10	145568-01-SJ0	EA	CABINET - OVERHEAD/MICROWAVE - W/O DOORS/HARDWARE - SIERRA MAPLE

COPYRIGHT © 2007 WINNEBAGO INDUSTRIES INC.

CABINET & APPLIANCE GROUP (CONTINUED)

CABINET & APPLIANCE LAYOUT (CONTINUED)

KEY	PART NUMBER	U/M	DESCRIPTION
10	150460-01-T53	EA	CABINET-MICROWAVE-W/O DRS/HRDWARE - PORTSMOUTH OAK - MICROWAVE/CONVECTION OVEN FROM: 00-00-00 THRU: 11-17-05
10	157258-01-T53	EA	CABINET - MICROWAVE- W/O DRS/HDWARE - PORTSMOUTH OAK - MICROWAVE/CONVECTION OVEN FROM: 11-18-05 THRU: 99-99-99
10	150460-01-SJ0	EA	CABINET-MICROWAVE - W/O DRS/HRDWARE - SIERRA MAPLE - MICROWAVE/CONVECTION OVEN FROM: 00-00-00 THRU: 11-17-05
10	157258-01-TL0	EA	CABINET - MICROWAVE-W/O DRS/HRDWARE - SIERRA MAPLE - MICROWAVE/CONVECTION OVEN FROM: 11-18-05 THRU: 99-99-99
11	098916-33-02B	EA	BRACE - MICROWAVE CABINET - LEFT HAND - E-COATED
11	149420-06-02B	EA	BRACE - MICROWAVE - E-COATED - LEFT HAND - MICROWAVE/CONVECTION OVEN
12	098916-34-02B	EA	BRACE - MICROWAVE CABINET - RIGHT HAND - E-COATED
12	149420-05-02B	EA	BRACE - MICROWAVE - E-COATED - RIGHT HAND - MICROWAVE/CONVECTION OVEN
13	155797-34-T53	EA	SHELF - W/PLASTIC EDGE MOLDING - PORTSMOUTH OAK
13	155797-34-TL0	EA	SHELF - W/PLASTIC EDGE MOLDING - SIERRA MAPLE
14	137983-01-T53	EA	CABINET - OVERHEAD/REAR - W/O DOORS/HARDWARE - PORTSMOUTH OAK
14	137983-01-SJ0	EA	CABINET - OVERHEAD/REAR - W/O DOORS/HARDWARE - SIERRA MAPLE
15	137960-01-N21	EA	CABINET - OVERHEAD/SHIRT/LEFT HAND - W/O DOORS/HARDWARE - PORTSMOUTH OAK
15	137960-01-SJ0	EA	CABINET - OVERHEAD/SHIRT/LEFT HAND - W/O DOORS/HARDWARE - SIERRA MAPLE
16	137406-03-N21	EA	BEDBOARD - W/HINGE/T-MOLDING/SLIPNOT - FLIP-UP
17	P48212-01-S28	EA	CABINET - BASE - QUEEN BED - W/O DOORS/DRAWERS/HDW - PORTSMOUTH OAK
17	P48212-01-SJ0	EA	CABINET - BASE - QUEEN BED - W/O DOORS/DRAWERS/HDW - SIERRA MAPLE
17	P48212-02-S28	EA	CABINET - BASE - QUEEN BED - PORTSMOUTH OAK - AUX AUTO/MOTORAID
17	P48212-02-SJ0	EA	CABINET - BASE - QUEEN BED - SIERRA MAPLE - AUX AUTO/MOTORAID
18*	121568-06-01A	EA	REFRIGERATOR - SMALL DBL DOOR-RH/2 WAY- 52.8"HX23.5"WX24"D
	P34457-03-N47	EA	PANEL - INSERT RAISED MEMBRANE-21.5"X14.5"-PORTSMOUTH OAK - GALLEY UPGRADE PACKAGE
	P34457-03-SA3	EA	PANEL - INSERT RAISED MEMBRANE-21.5"X14.5"-SIERRA MAPLE - GALLEY UPGRADE PACKAGE
	P34457-74-T11	EA	PANEL - INSERT RAISED MEMBRANE-21.5"X31.5"-PORTSMOUTH OAK - GALLEY UPGRADE PACKAGE
	P34457-74-TK0	EA	PANEL - INSERT RAISED MEMBRANE-21.5"X31.5"-SIERRA MAPLE - GALLEY UPGRADE PACKAGE
	090329-01-000	FT	SEAL - “T” - REFRIGERATOR CABINET
	054450-01-000	EA	LEVEL - REFRIGERATOR
	116751-05-01A	EA	TRAY - REFRIGERATOR - BLACK
19*	136354-01-02A	EA	HOOD - RANGE - W/LITE/FAN - BLACK TEXTURED - US
19*	136354-02-02A	EA	HOOD - RANGE - W/LITE/FAN - BLACK TEXTURED - CSA - CANADIAN
19*	136354-05-01A	EA	HOOD - RANGE - W/LITE/FAN - BLACK TEXTURED - UL - MICROWAVE/CONVECTION OVEN
19*	136354-06-01A	EA	HOOD - RANGE - W/LITE/FAN - BLACK TEXTURED-CSA - CANADIAN/MICROWAVE/CONVECTION OVEN
20*	151277-01-01A	EA	RANGE - 16" - 3 BURNER - BLACK DOOR/TEXTURED
21	140176-03-02B	EA	BRACKET/TIEDOWN - STOVE - E-COATED
22	140176-04-02B	EA	BRACKET/TIEDOWN - STOVE - E-COATED
23	126022-04-01A	EA	COVER/RANGE - BI-FOLD - 16" - NEW GRATES - GALLEY UPGRADE PACKAGE
24	P55797-01-T53	EA	CABINET - GALLEY - W/O COUNTERTOP/DOORS/DRAWERS/HDW - PORTSMOUTH OAK
24	P55797-01-TL0	EA	CABINET - GALLEY - W/O COUNTERTOP/DOORS/DRAWERS/HDW - SIERRA MAPLE
24	P55797-02-T53	EA	CABINET-W/O CNTRTP/DRS/DRWRS/HDW-PORTSMOUTH OAK - TWO WAY RADIOS (4)
24	P55797-02-TL0	EA	CABINET-W/O CNTRTP/DRS/DRWRS/HDW - SIERRA MAPLE - TWO WAY RADIOS (4)
25*	114030-04-01A	EA	RANGE - TOP - 3 BURNER NEW STYLE KNOBS/GRATES-W/O OVEN - BLACK - RANGE TOP
26	142139-03-02B	EA	BRACKET/TIEDOWN - STOVE - E-COATED
27	142139-04-02B	EA	BRACKET/TIEDOWN - STOVE - E-COATED
28	126022-05-01A	EA	COVER/RANGE - BI-FOLD - 22" - NEW GRATES - RANGE TOP - GALLEY UPGRADE PACKAGE
29	P55797-03-T53	EA	CABINET - GALLEY - W/O COUNTERTOP/DOORS/DRAWERS/HDW - PORTSMOUTH OAK - RANGE TOP
29	P55797-03-TL0	EA	CABINET - GALLEY - W/O COUNTERTOP/DOORS/DRAWERS/HDW - SIERRA MAPLE - RANGE TOP
29	P55797-04-T53	EA	CABINET-W/O CNTRTP/DRS/DRWRS/HDW - PORTSMOUTH OAK - RANGE TOP/TWO WAY RADIOS (4)
29	P55797-04-TL0	EA	CABINET-W/O CNTRTP/DRS/DRWRS/HDW - SIERRA MAPLE - RANGE TOP/TWO WAY RADIOS (4)
30	133653-26-T53	EA	COUNTERTOP - LAMINATED - MYSTIQUE DAWN/PORTSMOUTH OAK
30	133653-26-T54	EA	COUNTERTOP - LAMINATED - BRONZE LEGACY/PORTSMOUTH OAK
30	133653-26-T55	EA	COUNTERTOP - LAMINATED - SOFT ROCK/PORTSMOUTH OAK
30	133653-26-TL0	EA	COUNTERTOP - LAMINATED - MYSTIQUE DAWN/SIERRA MAPLE
30	133653-26-TL1	EA	COUNTERTOP - LAMINATED - BRONZE LEGACY/SIERRA MAPLE
30	133653-26-TL2	EA	COUNTERTOP - LAMINATED - SOFT ROCK/SIERRA MAPLE
30	133653-54-T53	EA	COUNTERTOP - LAMINATED - MYSTIQUE DAWN/PORTSMOUTH OAK - GALLEY UPGRADE PACKAGE
30	133653-54-T54	EA	COUNTERTOP - LAMINATED - BRONZE LEGACY/PORTSMOUTH OAK - GALLEY UPGRADE PACKAGE
30	133653-54-T55	EA	COUNTERTOP - LAMINATED - SOFT ROCK/PORTSMOUTH OAK - GALLEY UPGRADE PACKAGE

COPYRIGHT © 2007 WINNEBAGO INDUSTRIES INC.

CABINET & APPLIANCE GROUP (CONTINUED)

CABINET & APPLIANCE LAYOUT (CONTINUED)

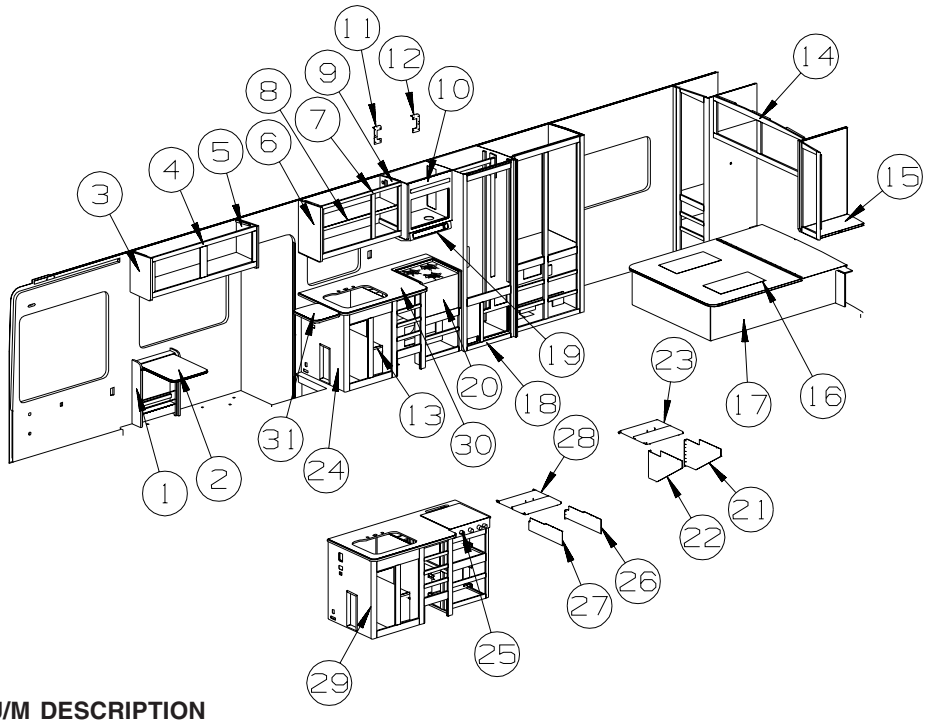

KEY	PART NUMBER	U/M	DESCRIPTION
30	133653-54-TL0	EA	COUNTERTOP - LAMINATED - MYSTIQUE DAWN/SIERRA MAPLE - GALLEY UPGRADE PACKAGE
30	133653-54-TL1	EA	COUNTERTOP - LAMINATED - BRONZE LEGACY/SIERRA MAPLE - GALLEY UPGRADE PACKAGE
30	133653-54-TL2	EA	COUNTERTOP - LAMINATED - SOFT ROCK/SIERRA MAPLE - GALLEY UPGRADE PACKAGE
31	129503-04-T53	EA	EXTENSION - GALLEY COUNTERTOP - W/O HDW
31	129503-04-T54	EA	EXTENSION - GALLEY COUNTERTOP - W/O HDW
31	129503-04-T55	EA	EXTENSION - GALLEY COUNTERTOP - W/O HDW
31	129503-04-TL0	EA	EXTENSION - GALLEY COUNTERTOP - W/O HDW
31	129503-04-TL1	EA	EXTENSION - GALLEY COUNTERTOP - W/O HDW
31	129503-04-TL2	EA	EXTENSION - GALLEY COUNTERTOP - W/O HDW

***COMPONENT PARTS LISTED LATER IN THIS GROUP**

COPYRIGHT © 2007 WINNEBAGO INDUSTRIES INC.

CABINET & APPLIANCE GROUP (CONTINUED)

CABINET & APPLIANCE LAYOUT (CONTINUED)

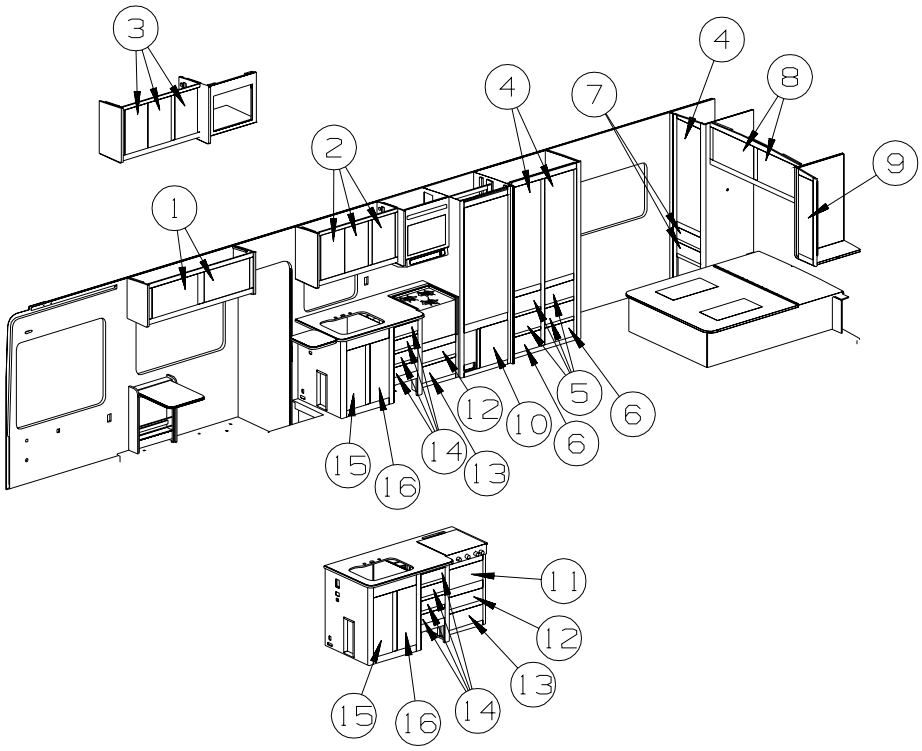

KEY	PART NUMBER	U/M	DESCRIPTION
1	136954-C1-T53	EA	DOOR - RAISED PANEL/OGEE EDGE - 15.4" X 25.6" - W/O HDW - PORTSMOUTH OAK
1	136954-C1-TL0	EA	DOOR - RAISED PANEL/OGEE EDGE - 15.4" X 25.6" - W/O HDW - SIERRA MAPLE
2	136954-88-T11	EA	DOOR - RAISED PANEL/OGEE EDGE - 13.4" X 21.9" - W/O HDW - PORTSMOUTH OAK
2	136954-88-TL0	EA	DOOR - RAISED PANEL/OGEE EDGE - 13.4" X 21.9" - W/O HDW - SIERRA MAPLE
3	136954-67-T11	EA	DOOR - OG EDGE - 12" X 21.9" - W/O HDW - PORTSMOUTH OAK - MICROWAVE/CONVECTION OVEN FROM: 00-00-00 THRU: 11-17-05
3	136954-85-T11	EA	DOOR - OG EDGE - 12.8" X 21.8" - W/O HDW - PORTSMOUTH OAK - MICROWAVE/CONVECTION OVEN FROM: 11-18-05 THRU: 99-99-99
3	136954-67-TK0	EA	DOOR - OGEE EDGE - 12" X 21.9" - W/O HDW - SIERRA MAPLE - MICROWAVE/CONVECTION OVEN FROM: 00-00-00 THRU: 11-17-05
3	136954-85-TK0	EA	DOOR - OGEE EDGE - 12.8" X 21.8" - W/O HDW - SIERRA MAPLE - MICROWAVE/CONVECTION OVEN FROM: 11-18-05 THRU: 99-99-99
4	141506-03-T53	EA	DOOR - MIRRORED/OGEE EDGE - 16.7" X 48" - W/O HDW - PORTSMOUTH OAK
4	141506-03-TL0	EA	DOOR - MIRRORED/OGEE EDGE - 16.7" X 48" - W/O HDW - SIERRA MAPLE
5	153121-GJ-T53	EA	DRAWER - OGEE EDGE - 14.7"W X 19.7"D - W/O SLIDES/HDW - PORTSMOUTH OAK
5	153121-GJ-TL0	EA	DRAWER - OGEE EDGE - 14.7"W X 19.7"D - W/O SLIDES/HDW - SIERRA MAPLE
6	153121-GG-T53	EA	DRAWER - OGEE EDGE - 14.7"W X 11.8"D - W/O SLIDES/HDW - PORTSMOUTH OAK
6	153121-GG-TL0	EA	DRAWER - OGEE EDGE - 14.7"W X 11.8"D - W/O SLIDES/HDW - SIERRA MAPLE
7	153121-T6-T53	EA	DRAWER - OGEE EDGE - 14.7"W X 17.7"D - W/O SLIDES/HDW - PORTSMOUTH OAK
7	153121-T6-TL0	EA	DRAWER - OGEE EDGE - 14.7"W X 17.7"D - W/O SLIDES/HDW - SIERRA MAPLE
8	136918-D3-T53	EA	DOOR - FLAT/OGEE EDGE - 15.7" X 27.9" - W/O HARDWARE - PORTSMOUTH OAK
8	136918-D3-TL0	EA	DOOR - FLAT/OGEE EDGE - 15.7" X 27.9" - W/O HARDWARE - SIERRA MAPLE
9	136918-49-T11	EA	DOOR - FLAT/OGEE EDGE - 10.8" X 36.4" - W/O HARDWARE - PORTSMOUTH OAK
9	136918-49-TK0	EA	DOOR - FLAT/OGEE EDGE - 10.8" X 36.4" - W/O HARDWARE - SIERRA MAPLE
10	147084-01-T53	EA	DOOR - FLAT PANEL/OGEE EDGE - 15.7" X 20.4" - W/O HDW - PORTSMOUTH OAK
10	147084-01-TL0	EA	DOOR - FLAT PANEL/OGEE EDGE - 15.7" X 20.4" - W/O HDW - SIERRA MAPLE
11	153121-N4-T53	EA	DRAWER - OGEE EDGE - 19.8"W X 11.8"D - W/O SLIDES/HDW - PORTSMOUTH OAK
11	153121-N4-TL0	EA	DRAWER - OGEE EDGE - 19.8"W X 11.8"D - W/O SLIDES/HDW - SIERRA MAPLE
12	153121-M2-T54	EA	DRAWER - OGEE EDGE - 19.8"W X 11.8"D - W/O SLIDES/HDW - PORTSMOUTH OAK
12	153121-M2-TL0	EA	DRAWER - OGEE EDGE - 19.8"W X 11.8"D - W/O SLIDES/HDW - SIERRA MAPLE
13	153121-M5-T53	EA	DRAWER - OGEE EDGE - 19.8"W X 11.8"D - W/O SLIDES/HDW - PORTSMOUTH OAK
13	153121-M5-TL0	EA	DRAWER - OGEE EDGE - 19.8"W X 11.8"D - W/O SLIDES/HDW - SIERRA MAPLE
14	153121-L6-T53	EA	DRAWER - OGEE EDGE - 12"W X 19.7"D - W/O SLIDES/HDW - PORTSMOUTH OAK
14	153121-L6-TL0	EA	DRAWER - OGEE EDGE - 12"W X 19.7"D - W/O SLIDES/HDW - SIERRA MAPLE
15	136918-63-T53	EA	DOOR - FLAT/OGEE EDGE - 11.4" X 28.1" - W/O HARDWARE - PORTSMOUTH OAK
15	136918-63-TL0	EA	DOOR - FLAT/OGEE EDGE - 11.4" X 28.1" - W/O HARDWARE - SIERRA MAPLE
16	136918-62-T53	EA	DOOR - FLAT/OGEE EDGE - 11.4" X 28.1" - W/O HARDWARE - PORTSMOUTH OAK
16	136918-62-TL0	EA	DOOR - FLAT/OGEE EDGE - 11.4" X 28.1" - W/O HARDWARE - SIERRA MAPLE

COPYRIGHT © 2007 WINNEBAGO INDUSTRIES INC.

CABINET & APPLIANCE GROUP (CONTINUED)

CABINET & APPLIANCE LAYOUT (CONTINUED)

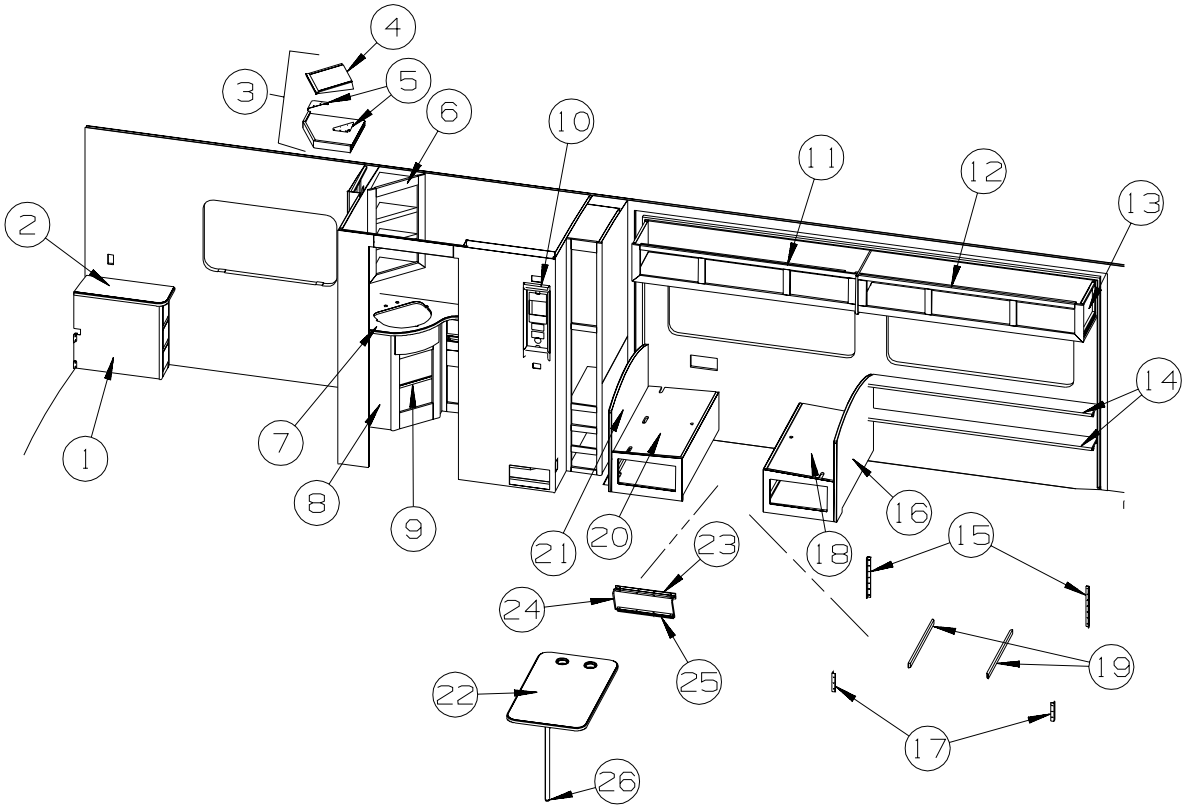

KEY	PART NUMBER	U/M	DESCRIPTION
1	131843-02-N21	EA	CABINET - NIGHTSTAND - W/O COUNTERTOP/DOOR/DRAWER/HARDWARE - PORTSMOUTH OAK
1	131843-02-SJ0	EA	CABINET - NIGHTSTAND - W/O COUNTERTOP/DOOR/DRAWER/HARDWARE - SIERRA MAPLE
2	133655-32-T53	EA	COUNTERTOP - LAMINATED - MYSTIQUE DAWN/PORTSMOUTH OAK
2	133655-32-TL0	EA	COUNTERTOP - LAMINATED - MYSTIQUE DAWN/SIERRA MAPLE
2	133655-32-TL1	EA	COUNTERTOP - LAMINATED - BRONZE LEGACY/SIERRA MAPLE
2	133655-32-TL2	EA	COUNTERTOP - LAMINATED - SOFT ROCK/SIERRA MAPLE
2	133655-32-T54	EA	COUNTERTOP - LAMINATED - BRONZE LEGACY/PORTSMOUTH OAK
2	133655-32-T55	EA	COUNTERTOP - LAMINATED - SOFT ROCK/PORTSMOUTH OAK
3	146774-01-R28	EA	CABINET - TV SHELF/LEFT HAND - W/O DOORS/HARDWARE - PORTSMOUTH OAK
3	146774-01-SJ0	EA	CABINET - TV SHELF/LEFT HAND - W/O DOORS/HARDWARE - SIERRA MAPLE
4	133023-07-R28	EA	WEDGE - TV - PORTSMOUTH OAK
4	133023-07-SJ0	EA	WEDGE - TV - SIERRA MAPLE
5	146782-01-02B	EA	BRACKET - TV SHELF - E-COATED
6	143253-02-P31	EA	CABINET - MEDICINE - W/O DOORS/HARDWARE - PORTSMOUTH OAK
6	143253-02-S35	EA	CABINET - MEDICINE - W/O DOORS/HARDWARE - SIERRA MAPLE
7	133654-27-T53	EA	COUNTERTOP - LAMINATED - MYSTIQUE DAWN/PORTSMOUTH OAK
7	133654-27-T54	EA	COUNTERTOP - LAMINATED - BRONZE LEGACY/PORTSMOUTH OAK
7	133654-27-T55	EA	COUNTERTOP - LAMINATED - SOFT ROCK/PORTSMOUTH OAK
7	133654-27-TL0	EA	COUNTERTOP - LAMINATED - MYSTIQUE DAWN/SIERRA MAPLE
7	133654-27-TL1	EA	COUNTERTOP - LAMINATED - BRONZE LEGACY/SIERRA MAPLE
7	133654-27-TL2	EA	COUNTERTOP - LAMINATED - SOFT ROCK/SIERRA MAPLE
8	P50412-01-S28	EA	CABINET - LAVATORY - W/O COUNTERTOP/DOORS/DRAWERS/HARDWARE - PORTSMOUTH OAK
8	P50412-01-SJ0	EA	CABINET - LAVATORY - W/O COUNTERTOP/DOORS/DRAWERS/HARDWARE - SIERRA MAPLE
9	150412-22-S28	EA	SHELF - W/PLASTIC MOLDING - PORTSMOUTH OAK
9	150412-22-SJ0	EA	SHELF - W/PLASTIC MOLDING - SIERRA MAPLE
10	137602-04-N30	EA	POCKET - MONITOR PANEL - PORTSMOUTH OAK
10	137602-04-SJ0	EA	POCKET - MONITOR PANEL - SIERRA MAPLE
10	137602-C7-R32	EA	POCKET - MONITOR PANEL - PORTSMOUTH OAK - AUX AUTO/MOTORAID
10	137602-C7-SR0	EA	POCKET - MONITOR PANEL - SIERRA MAPLE - AUX AUTO/MOTORAID
11	148603-01-S28	EA	CABINET - OVERHEAD/DINETTE - W/O DOORS/HARDWARE - PORTSMOUTH OAK
11	148603-01-SJ0	EA	CABINET - OVERHEAD/DINETTE - W/O DOORS/HARDWARE - SIERRA MAPLE
12	139373-01-N21	EA	CABINET - OVERHEAD/COUCH - W/O DOORS/HARDWARE - PORTSMOUTH OAK
12	139373-01-SJ0	EA	CABINET - OVERHEAD/COUCH - W/O DOORS/HARDWARE - SIERRA MAPLE

COPYRIGHT © 2007 WINNEBAGO INDUSTRIES INC.

CABINET & APPLIANCE GROUP (CONTINUED)

CABINET & APPLIANCE LAYOUT (CONTINUED)

KEY	PART NUMBER	U/M	DESCRIPTION
13	109908-B7-M07	EA	END CAP - OVERHEAD CABINET - PORTSMOUTH OAK FROM: 00-00-00 THRU: 07-17-05
13	156296-04-T53	EA	END CAP - OVERHEAD CABINET - PORTSMOUTH OAK FROM: 07-18-05 THRU: 99-99-99
13	109908-B7-S88	EA	END CAP - OVERHEAD CABINET - SIERRA MAPLE FROM: 00-00-00 THRU: 07-17-05
13	156296-04-TL0	EA	END CAP - OVERHEAD CABINET - SIERRA MAPLE FROM: 07-18-05 THRU: 99-99-99
14	140246-05-T53	EA	SHELF - W/EDGE MOLDING - F/SLIDEOUT - 69.1" - PORTSMOUTH OAK
14	140246-05-TL0	EA	SHELF - W/EDGE MOLDING - F/SLIDEOUT - 69.1" - SIERRA MAPLE
15	122021-02-02A	EA	ANGLE - W/HOLES - 13.7" LONG - OFF WHITE
16	137092-J4-T53	EA	DINETTE SEAT BACK - W/O HARDWARE - RH - PORTSMOUTH OAK
16	137092-J4-TL0	EA	DINETTE SEAT BACK - W/O HARDWARE - RH - SIERRA MAPLE
16	137092-K1-T53	EA	DINETTE SEAT BACK - W/O HARDWARE - RH - PORTSMOUTH OAK - GALLEY UPGRADE PACKAGE
16	137092-K1-TL0	EA	DINETTE SEAT BACK - W/O HARDWARE - RH - SIERRA MAPLE - GALLEY UPGRADE PACKAGE
17	122021-09-02A	EA	ANGLE - W/HOLES - OFF WHITE
18	P37092-29-T53	EA	CABINET/SEAT BASE - RIGHT HAND - W/O DOOR/DRAWER/HDW - PORTSMOUTH OAK
18	P37092-29-TL0	EA	CABINET/SEAT BASE - RIGHT HAND - W/O DOOR/DRAWER/HDW - SIERRA MAPLE
18	P37092-31-T53	EA	CABINET/SEAT BASE - RH - W/O DOOR/HDW - PORTSMOUTH OAK - GALLEY UPGRADE PACKAGE
18	P37092-31-TL0	EA	CABINET/SEAT BASE - RH - W/O DOOR/HDW - SIERRA MAPL - GALLEY UPGRADE PACKAGE
19	081295-01-N70	EA	SUPPORT - BED/DINETTE - 28" LONG - PORTSMOUTH OAK
19	081295-01-RE0	EA	SUPPORT - BED/DINETTE - 28" LONG - SIERRA MAPLE
20	P37092-28-T53	EA	CABINET/SEAT BASE - LEFT HAND - W/O DOOR/DRAWER/HDW - PORTSMOUTH OAK
20	P37092-28-TL0	EA	CABINET/SEAT BASE - LEFT HAND - W/O DOOR/DRAWER/HDW - SIERRA MAPLE
20	P37092-30-T53	EA	CABINET/SEAT BASE - LH - W/O DOOR/HDW - PORTSMOUTH OAK - GALLEY UPGRADE PACKAGE
20	P37092-30-TL0	EA	CABINET/SEAT BASE - LH - W/O DOOR/HDW - SIERRA MAPLE - GALLEY UPGRADE PACKAGE
21	137092-H9-T53	EA	DINETTE SEAT BACK - W/O HARDWARE - LH - PORTSMOUTH OAK
21	137092-H9-TL0	EA	DINETTE SEAT BACK - W/O HARDWARE - LH - SIERRA MAPLE
21	137092-J9-T53	EA	DINETTE SEAT BACK - W/O HARDWARE - LH - PORTSMOUTH OAK - GALLEY UPGRADE PACKAGE
21	137092-J9-TL0	EA	DINETTE SEAT BACK - W/O HARDWARE - LH - SIERRA MAPLE - GALLEY UPGRADE PACKAGE
22	144605-06-T53	EA	TABLE/DINETTE - LAMINATED - 41.6" X 24" - MYSTIQE DAWN/PORTSMOUTH OAK
22	144605-06-T54	EA	TABLE/DINETTE - LAMINATED - 41.6" X 24" - BRONZE LEGACY/PORTSMOUTH OAK
22	144605-06-T55	EA	TABLE/DINETTE - LAMINATED - 41.6" X 24" - SOFT ROCK/PORTSMOUTH OAK
22	144605-06-TL0	EA	TABLE/DINETTE - LAMINATED - 41.6" X 24" - MYSTIQE DAWN/SIERRA MAPLE
22	144605-06-TL1	EA	TABLE/DINETTE - LAMINATED - 41.6" X 24" - BRONZE LEGACY/SIERRA MAPLE
22	144605-06-TL2	EA	TABLE/DINETTE - LAMINATED - 41.6" X 24" - SOFT ROCK/SIERRA MAPLE
23	140921-02-01A	EA	BRACKET/TABLE SUPPORT - 18.5" - OFF WHITE
24	024275-13-000	EA	ROD - TABLE LIFT - OFF/WHITE
25	024281-15-000	EA	BRACKET/WALL - TABLE LIFT - 17.12"
26	143798-01-01A	EA	CATCH - FLOOR TO TABLE LEG - BRIGHT WHITE

COPYRIGHT © 2007 WINNEBAGO INDUSTRIES INC.

CABINET & APPLIANCE GROUP (CONTINUED)

CABINET & APPLIANCE LAYOUT (CONTINUED)

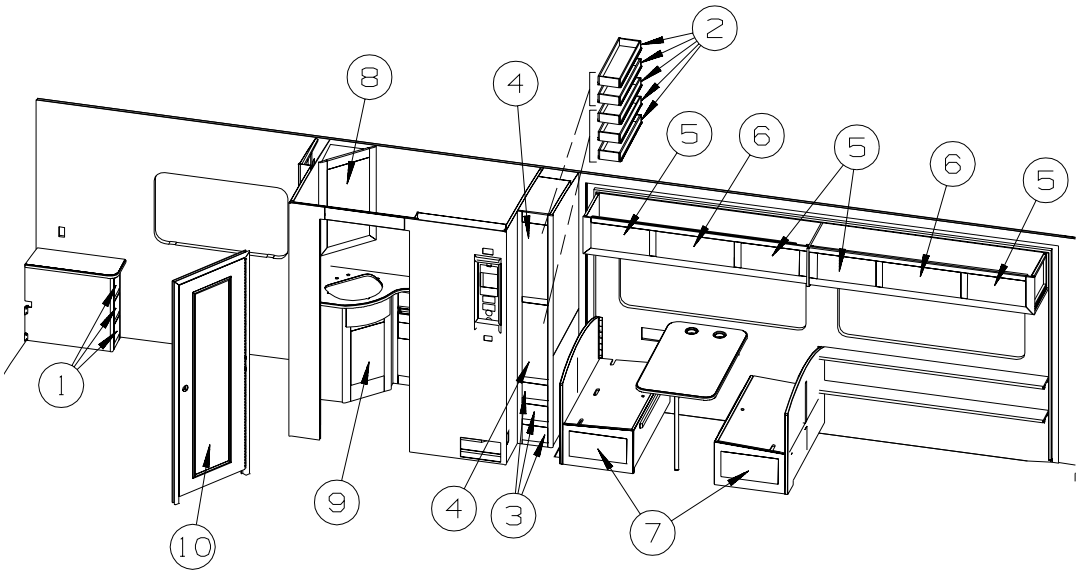

KEY	PART NUMBER	U/M	DESCRIPTION
1	153121-L0-T53	EA	DRAWER - OGEE EDGE - 5.3"W X 19.7"D - W/O SLIDES/HDW - PORTSMOUTH OAK
1	153121-L0-TL0	EA	DRAWER - OGEE EDGE - 5.3"W X 19.7"D - W/O SLIDES/HDW - SIERRA MAPLE
2	153120-B5-T53	EA	DRAWER/BOX - PANTRY - 6.8"W X 23.6"D - W/O SLIDES/HDW FROM: 00-00-00 THRU: 09-18-05
2	153120-N9-T53	EA	DRAWER/BOX - PANTRY - 6.8"W X 23.6"D - W/O SLIDES/HDW FROM: 09-19-05 THRU: 99-99-99
3	153121-P0-T53	EA	DRAWER - OGEE EDGE - 6.8"W X 23.6"D - W/O SLIDES/HDW - PORTSMOUTH OAK
3	153121-P0-TL0	EA	DRAWER - OGEE EDGE - 6.8"W X 23.6"D - W/O SLIDES/HDW - SIERRA MAPLE
4	136918-04-T53	EA	DOOR - FLAT/OGEE EDGE - 9" X 26.5" - W/O HARDWARE - PORTSMOUTH OAK
4	136918-04-TL0	EA	DOOR - FLAT/OGEE EDGE - 9" X 26.5" - W/O HARDWARE - SIERRA MAPLE
5	136954-22-T53	EA	DOOR - RAISED PANEL/OGEE EDGE - 10" X 19.1" - W/O HDW - PORTSMOUTH OAK
5	136954-22-TL0	EA	DOOR - RAISED PANEL/OGEE EDGE - 10" X 19.1" - W/O HDW - SIERRA MAPLE
6	136954-25-T11	EA	DOOR - RAISED PANEL/OGEE EDGE - 10" X 25.2" - W/O HDW - PORTSMOUTH OAK
6	136954-25-TL0	EA	DOOR - RAISED PANEL/OGEE EDGE - 10" X 25.2" - W/O HDW - SIERRA MAPLE
7	147084-07-T11	EA	DOOR - FLAT PANEL/OGEE EDGE - 10" X 19.1" - W/O HDW - PORTSMOUTH OAK
7	147084-07-S35	EA	DOOR - FLAT PANEL/OGEE EDGE - 10" X 19.1" - W/O HDW - SIERRA MAPLE
8	141506-06-T53	EA	DOOR - MIRRORED/OGEE EDGE - 15.7" X 27.9" - W/O HDW - PORTSMOUTH OAK
8	141506-06-TL0	EA	DOOR - MIRRORED/OGEE EDGE - 15.7" X 27.9" - W/O HDW - SIERRA MAPLE
9	136918-87-T53	EA	DOOR - FLAT/OGEE EDGE - 12.8" X 21.8" - W/O HARDWARE - PORTSMOUTH OAK
9	136918-87-TL0	EA	DOOR - FLAT/OGEE EDGE - 12.8" X 21.8" - W/O HARDWARE - SIERRA MAPLE
10	144645-04-R13	EA	DOOR - BATH - W/O FRAME (PICTURE)/TOWEL RACK/HDW - PORTSMOUTH OAK
10	144645-04-S67	EA	DOOR - BATH - W/O FRAME (PICTURE)/TOWEL RACK/HDW - SIERRA MAPLE

COPYRIGHT © 2007 WINNEBAGO INDUSTRIES INC.

CABINET & APPLIANCE GROUP (CONTINUED)

CABINET & APPLIANCE LAYOUT (CONTINUED)

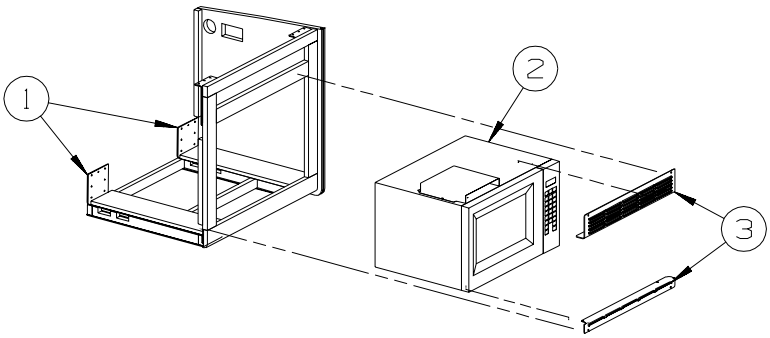

00-00-00 THRU: 02-08-06

KEY	PART NUMBER	U/M	DESCRIPTION
1	094750-10-000	EA	BRACKET - MICROWAVE - 89 DEGREE
2	153390-01-01A	EA	OVEN/MICROWAVE - 1.1 CU FT-NON-CONV-W/O TRIM-BLACK-UL/CSA
3	153390-02-01A	EA	TRIM KIT W/VENT - MICROWAVE 1.1 CU FT - BLACK - WHIRLPOOL

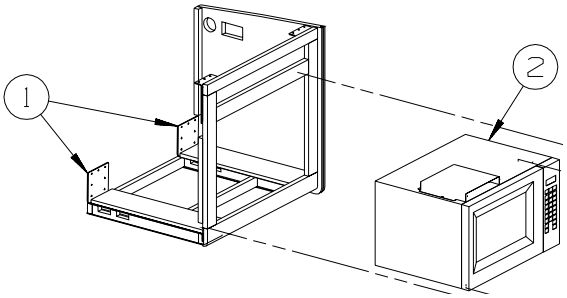

02-09-06 THRU: 99-99-99

KEY	PART NUMBER	U/M	DESCRIPTION
1	094750-10-000	EA	BRACKET - MICROWAVE - 89 DEGREE
2	158686-01-01A	EA	OVEN/MICROWAVE - .9 CU FT - NON-CONV - BLACK

COPYRIGHT © 2007 WINNEBAGO INDUSTRIES INC.

CABINET & APPLIANCE GROUP (CONTINUED)

CABINET & APPLIANCE LAYOUT (CONTINUED)

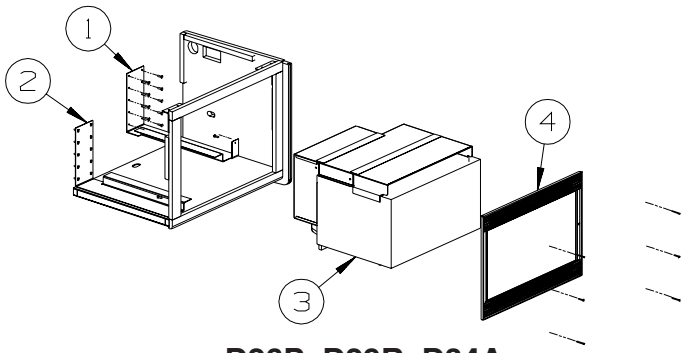

CONVECTION

D26P, D29R, D34A
FROM: 00-00-00 THRU: 04-26-05

KEY	PART NUMBER	U/M	DESCRIPTION
1	149418-01-02B	EA	BRACKET - MICROWAVE - E-COATED - NOT ILLUSTRATED
			FROM: 00-00-00 THRU: 05-12-05
1	149418-09-02B	EA	BRACKET - MICROWAVE - E-COATED
			FROM: 05-13-05 THRU: 99-99-99
2	149418-02-02B	EA	BRACKET - MICROWAVE - E-COATED - NOT ILLUSTRATED
			FROM: 00-00-00 THRU: 05-12-05
2	149418-10-02B	EA	BRACKET - MICROWAVE - E-COATED
			FROM: 05-13-05 THRU: 99-99-99
3*	150606-04-01A	EA	OVEN - MICROWAVE/CONVECTION/BLACK - .9 CU FT - #R-820BK
4	150606-05-01A	EA	TRIM KIT - MICROWAVE .9 CU FT - BLACK - MAGNADYNE #R820

***COMPONENT PARTS LISTED LATER IN THIS GROUP**

D26P, D29R, D34A
FROM: 04-27-05 THRU: 99-99-99

KEY	PART NUMBER	U/M	DESCRIPTION
1	149418-08-02B	EA	BRACKET - MICROWAVE - E-COATED - NOT ILLUSTRATED
			FROM: 00-00-00 THRU: 06-12-05
1	149418-12-02B	EA	BRACKET - MICROWAVE - E-COATED
			FROM: 06-13-05 THRU: 99-99-99
2	149418-07-02B	EA	BRACKET - MICROWAVE - E-COATED - NOT ILLUSTRATED
			FROM: 00-00-00 THRU: 06-12-05
2	149418-11-02B	EA	BRACKET - MICROWAVE - E-COATED
			FROM: 06-13-05 THRU: 99-99-99
3*	150606-04-01A	EA	OVEN - MICROWAVE/CONVECTION/BLACK - .9 CU FT - #R-820BK
4	150606-05-01A	EA	TRIM KIT - MICROWAVE .9 CU FT - BLACK - MAGNADYNE #R820

***COMPONENT PARTS LISTED LATER IN THIS GROUP**

COPYRIGHT © 2007 WINNEBAGO INDUSTRIES INC.

CABINET & APPLIANCE GROUP (CONTINUED)

CABINET & APPLIANCE LAYOUT (CONTINUED)

D30B, D33T, D35N
FROM: 00-00-00 THRU: 04-26-05

KEY	PART NUMBER	U/M	DESCRIPTION
1	149418-04-02B	EA	BRACKET - MICROWAVE - E-COATED
2	149418-01-02B	EA	BRACKET - MICROWAVE - E-COATED
3	150606-01-01A	EA	OVEN - MICROWAVE/CONVECTION/BLACK - 1.5 CU FT - #R-930AK
4	150606-02-01A	EA	TRIM KIT - MICROWAVE 1.5 CU FT - BLACK - SHARP #RK-66A

D30B, D33T, D35N
FROM: 04-27-05 THRU: 99-99-99

KEY	PART NUMBER	U/M	DESCRIPTION
1	149418-08-02B	EA	BRACKET - MICROWAVE - E-COATED - NOT ILLUSTRATED FROM: 00-00-00 THRU: 06-12-05
1	149418-12-02B	EA	BRACKET - MICROWAVE - E-COATED FROM: 06-13-05 THRU: 99-99-99
2	149418-07-02B	EA	BRACKET - MICROWAVE - E-COATED - NOT ILLUSTRATED FROM: 00-00-00 THRU: 06-12-05
2	149418-11-02B	EA	BRACKET - MICROWAVE - E-COATED FROM: 06-13-05 THRU: 99-99-99
3*	150606-04-01A	EA	OVEN - MICROWAVE/CONVECTION/BLACK - .9 CU FT - #R-820BK
4	150606-05-01A	EA	TRIM KIT - MICROWAVE .9 CU FT - BLACK - MAGNADYNE #R820

***COMPONENT PARTS LISTED LATER IN THIS GROUP**

COPYRIGHT © 2007 WINNEBAGO INDUSTRIES INC.

CABINET & APPLIANCE GROUP (CONTINUED)

CABINET & APPLIANCE LAYOUT (CONTINUED)

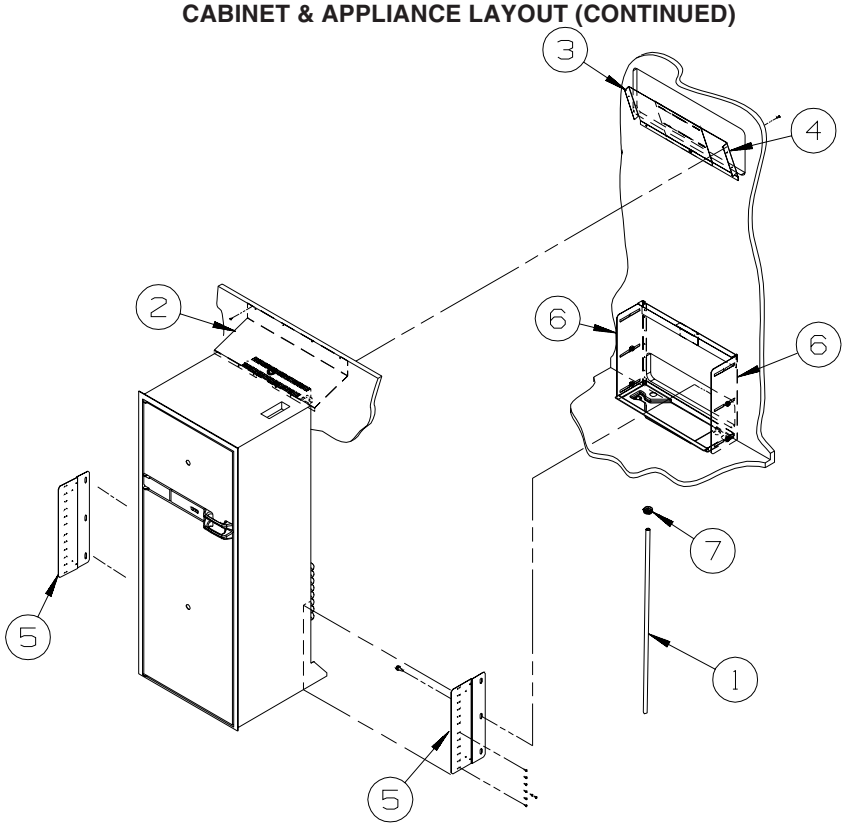

D26P

KEY	PART NUMBER	U/M	DESCRIPTION
1	112176-01-000	FT	TUBING - VINYL - REINFORCED - 1/2" ID
2	136966-04-02B	EA	BAFFLE - REFRIGERATOR - E-COATED
3	143195-01-02B	EA	BAFFLE - REFRIGERATOR - E-COATED
4	143195-02-02B	EA	BAFFLE - REFRIGERATOR - E-COATED
5	150740-01-02B	EA	BRACKET - REFRIGERATOR - E-COATED
6	150740-02-02B	EA	BRACKET - REFRIGERATOR - E-COATED
7	152417-01-01A	EA	CLAMP/RATCHET - F/REFRIDGERATOR DRIP TRAY HOSE - BLACK

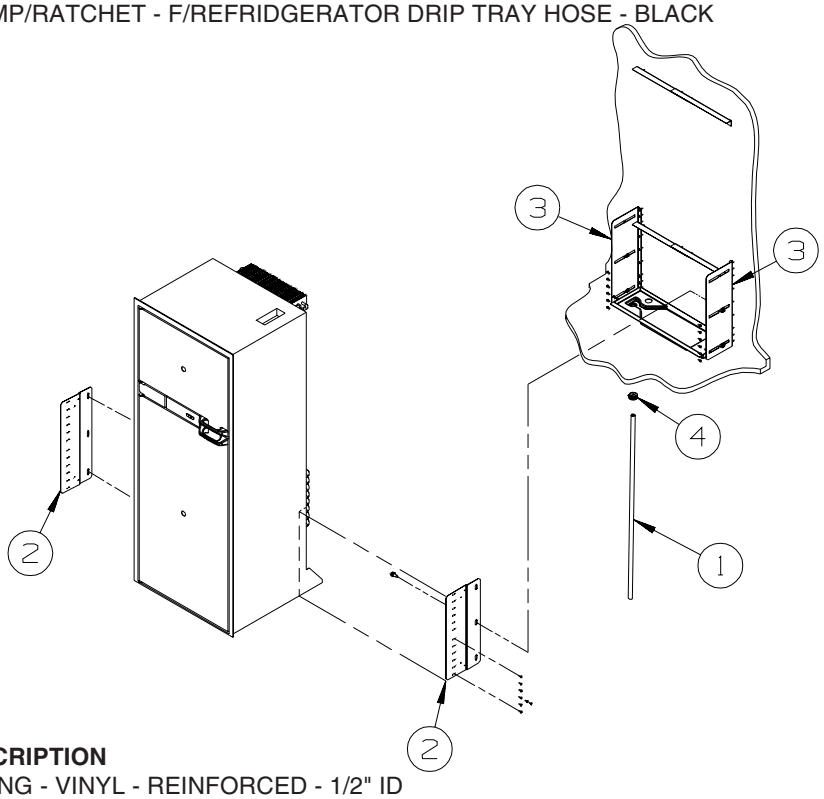

D29R, D33T, D35N

KEY	PART NUMBER	U/M	DESCRIPTION
1	112176-01-000	FT	TUBING - VINYL - REINFORCED - 1/2" ID
2	150740-01-02B	EA	BRACKET/TIEDOWN - REFRIGERATOR - E-COATED
3	150740-02-02B	EA	BRACKET/TIEDOWN - REFRIGERATOR - E-COATED
4	152417-01-01A	EA	CLAMP/RATCHET - F/REFRIGERATOR DRIP TRAY HOSE - BLACK

COPYRIGHT © 2007 WINNEBAGO INDUSTRIES INC.

CABINET & APPLIANCE GROUP (CONTINUED)

CABINET & APPLIANCE LAYOUT (CONTINUED)

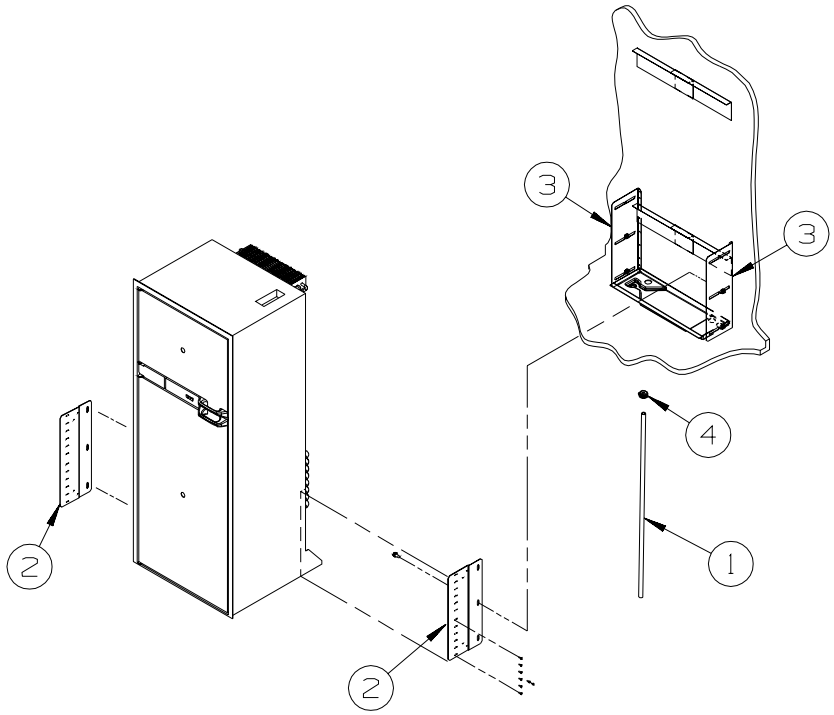

D30B

KEY	PART NUMBER	U/M	DESCRIPTION
1	112176-01-000	FT	TUBING - VINYL - REINFORCED - 1/2" ID
2	150740-01-02B	EA	BRACKET - REFRIGERATOR - E-COATED
3	150740-02-02B	EA	BRACKET - REFRIGERATOR - E-COATED
4	152417-01-01A	EA	CLAMP/RATCHET - F/REFRIDGERATOR DRIP TRAY HOSE - BLACK

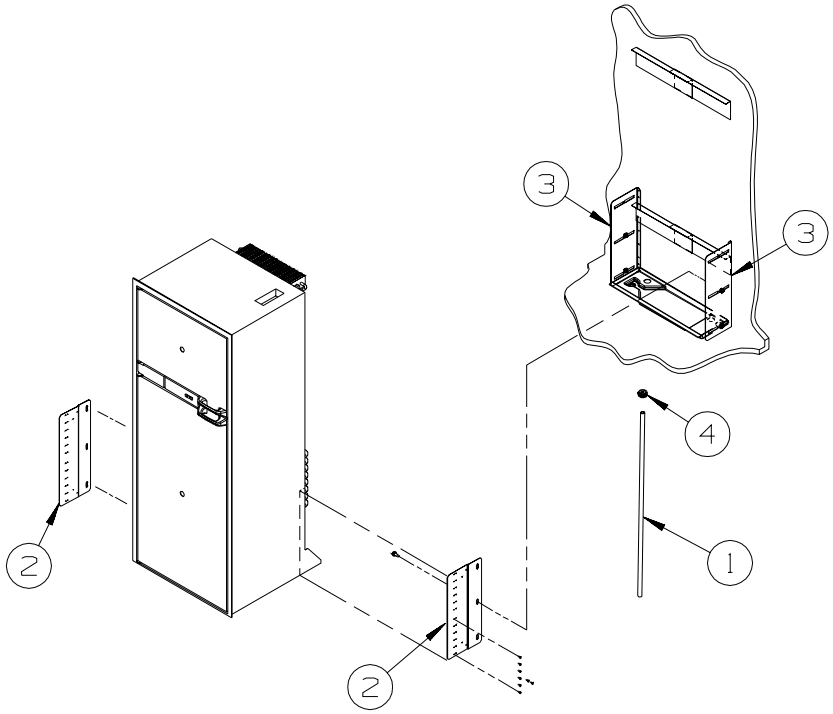

D34A

KEY	PART NUMBER	U/M	DESCRIPTION
1	112176-01-000	FT	TUBING - VINYL - REINFORCED - 1/2" ID
2	150740-01-02B	EA	BRACKET - REFRIGERATOR - E-COATED
3	150740-02-02B	EA	BRACKET - REFRIGERATOR - E-COATED
4	152417-01-01A	EA	CLAMP/RATCHET - F/REFRIDGERATOR DRIP TRAY HOSE - BLACK

COPYRIGHT © 2007 WINNEBAGO INDUSTRIES INC.

CABINET & APPLIANCE GROUP (CONTINUED)

COMPONENT PARTS FOR CABINET & APPLIANCE LAYOUT

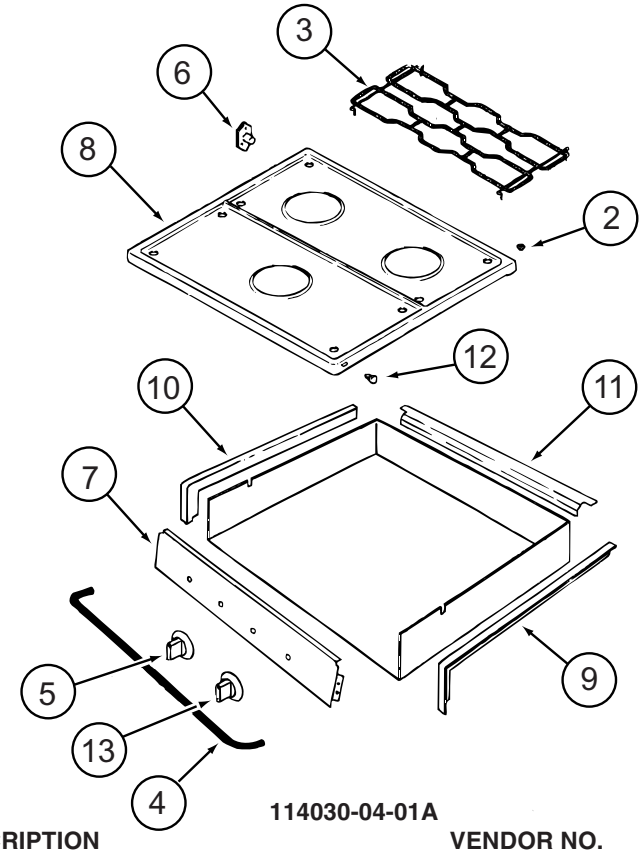

114030-04-01A

KEY	PART NUMBER	U/M	DESCRIPTION	VENDOR NO.
2	102020-01-709	EA	BUMPER-GRATE	8007P020-60
3	112881-04-702	EA	GRATE - BLACK	74007277
4	114030-02-700	EA	GUARD/FABRIC - TOWEL BAR	3609F006-70
5	128728-01-701	EA	KNOB - BURNER - REAR	74003941 (1 PER)
5	128728-01-702	EA	KNOB - BURNER - FRONT	74003942 (2 PER)
6	128728-01-703	EA	PIN/T-NUT F/HINGE	7103P109-60
7	114030-04-700	EA	PANEL - MANIFOLD - BLACK	74007325
8	126023-01-728	EA	TOP - MAIN (BLACK)	74003323
9	114030-01-704	EA	TRIM - RIGHT/BLACK TEXTURED	74002839
10	114030-01-705	EA	TRIM - LEFT/BLACK TEXTURED	74002840
11	114030-01-706	EA	TRIM - REAR/BLACK TEXTURED	74002841
12	102020-01-724	EA	BUMPER - MAIN TOP	8003P008-60
13	128728-01-707	EA	KNOB - IGNITER	74003944

CONTACT WINNEBAGO PART SALES FOR UNLISTED COMPONENT(S)

COPYRIGHT © 2007 WINNEBAGO INDUSTRIES INC.

CABINET & APPLIANCE GROUP (CONTINUED)

COMPONENT PARTS FOR CABINET & APPLIANCE LAYOUT (CONTINUED)

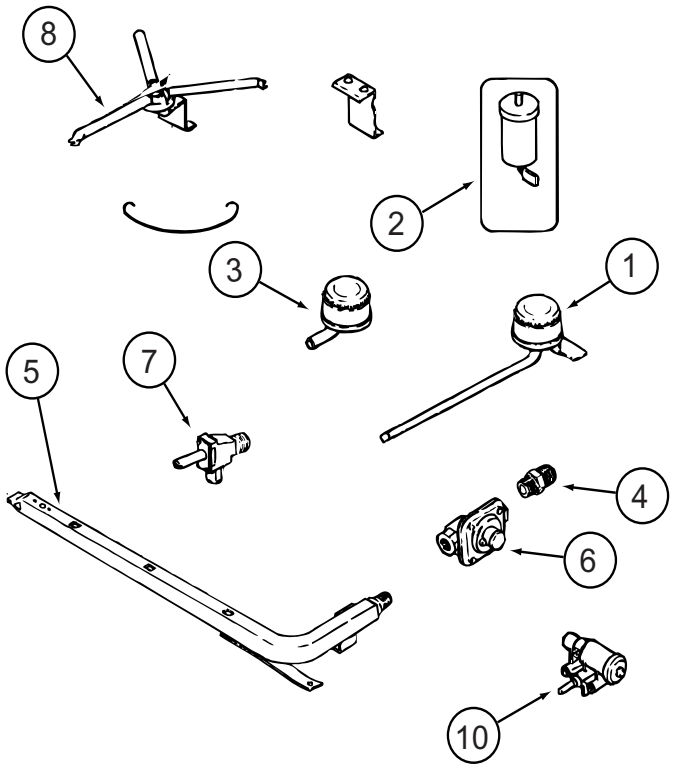

114030-04-01A (CONTINUED)

KEY	PART NUMBER	U/M	DESCRIPTION	VENDOR NO.
1	112881-04-700	EA	BURNER - TOP /LEFT - REAR	74004584
1	126023-01-700	EA	BURNER - TOP (RT-REAR) 5100 BTU	74004583
2	112881-04-705	EA	PUSH RING (ELECTRODE MTG)	7104P002-60
2	126023-01-711	EA	ELECTRODE - IGNITER (ONLY)	7432P077-60
3	112881-04-701	EA	BURNER - TOP/FRONT	74004582
4	135065-03-700	EA	FITTING - HALF UNION	74004234
5	135065-01-702	EA	PIPE/MANIFOLD	74004642
6	126023-02-702	EA	PIPE - MANIFOLD	74004360
7	126023-02-705	EA	VALVE - BURNER - REAR	74004362
7	126023-02-706	EA	VALVE - BURNER - FRONT	74004363
8	126023-01-736	EA	FLASH TUBE EXTENSION (REAR)	74003326
8	126023-01-737	EA	FLASH TUBE EXTENSION (FRONT)	74003327
10	126023-01-719	EA	IGNITER HEAD - TOP BURNER	74002413

CONTACT WINNEBAGO PART SALES FOR UNLISTED COMPONENT(S)

COPYRIGHT © 2007 WINNEBAGO INDUSTRIES INC.

CABINET & APPLIANCE GROUP (CONTINUED)

COMPONENT PARTS FOR CABINET & APPLIANCE LAYOUT (CONTINUED)

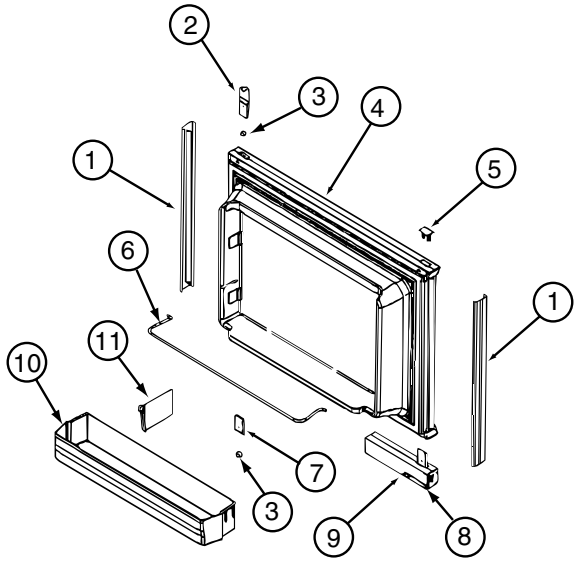

121568-06-01A, 121568-07-01A, 121568-08-01A

KEY	PART NUMBER	U/M	DESCRIPTION	VENDOR NO.
1	121568-03-700	EA	RETAINER-DOOR PNL/WAFFLE/BLK	619558-WDL-UPPER
2	120075-01-701	EA	HINGE-TOP RH/BOTTOM LH(DOOR)	618511
3	121568-03-701	EA	BUSHING - HINGE PIN/GRAY	619671
4	121568-03-702	EA	DOOR LINER-UPR/WAFFLED/BLACK	619627 - SMALL WDL
5	120075-01-702	EA	CAP, (HINGE PLUG)	618160
6	121568-01-700	EA	RAIL - DOOR UPPER	618618
7	120075-01-705	EA	HINGE-TOP LH/BOTTOM RH(DOOR)	618510
8	121568-03-705	EA	STORAGE LATCH - GRAY	619648
9	121568-03-721	EA	HANDLE/DOOR TOP LH/LWR RH	621465
9	121568-03-722	EA	HANDLE/DOOR LWR RH/TOP LH	621469
10	121568-01-701	EA	BIN - DOOR WHITE-WAFFLED LNR	618619 WDL

CONTACT WINNEBAGO PART SALES FOR UNLISTED COMPONENT(S)

COPYRIGHT © 2007 WINNEBAGO INDUSTRIES INC.

CABINET & APPLIANCE GROUP (CONTINUED)

COMPONENT PARTS FOR CABINET & APPLIANCE LAYOUT (CONTINUED)

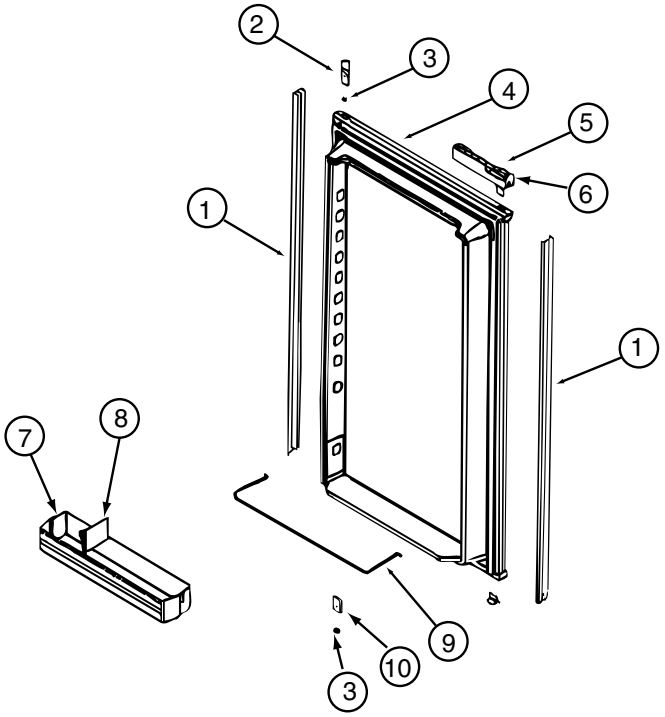

121568-06-01A, 121568-07-01A, 121568-08-01A (CONTINUED)

KEY	PART NUMBER	U/M	DESCRIPTION	VENDOR NO.
1	121568-03-706	EA	RETAINER-DOOR PNL/WAFFLE/BLK	619559-WDL-LOWER
2	120075-01-701	EA	HINGE-TOP RH/BOTTOM LH(DOOR)	618511
3	121568-03-701	EA	BUSHING - HINGE PIN/GRAY	619671
4	121568-03-707	EA	DOOR LINER-LWR/WAFFLED/B/TRM	619629
5	121568-03-721	EA	HANDLE/DOOR TOP LH/LWR RH	621465
5	121568-03-722	EA	HANDLE/DOOR LWR RH/TOP LH	621469
6	121568-03-705	EA	STORAGE LATCH - GRAY	619648
7	121568-01-701	EA	BIN - DOOR WHITE-WAFFLED LNR	618619 WDL
9	121568-01-704	EA	RAIL - DOOR LOWER	618578
10	120075-01-705	EA	HINGE-TOP LH/BOTTOM RH(DOOR)	618510
			CONTACT WINNEBAGO PART SALES FOR UNLISTED COMPONENT(S)	

COPYRIGHT © 2007 WINNEBAGO INDUSTRIES INC.

CABINET & APPLIANCE GROUP (CONTINUED)

COMPONENT PARTS FOR CABINET & APPLIANCE LAYOUT (CONTINUED)

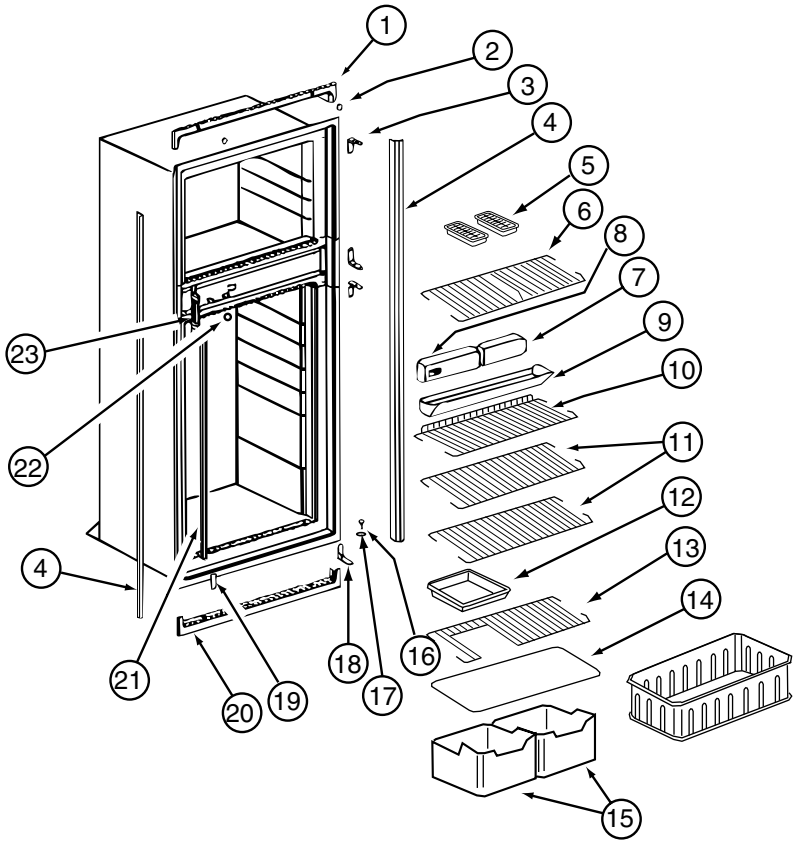

121568-06-01A, 121568-07-01A, 121568-08-01A (CONTINUED)

KEY	PART NUMBER	U/M	DESCRIPTION	VENDOR NO.
1	120075-01-713	EA	TRIM-TOP PIECE	619687
2	120075-01-714	EA	PLUG-HOLE (BLACK)	618170
3	121568-03-710	EA	HINGE/CABINET-TOP/RH-LWR/LH	619335 WAFFLED
4	121568-03-711	EA	TRIM - SIDE/BLACK	622295
6	121568-01-705	EA	SHELF - WIRE FREEZER	620250
7	121568-06-700	EA	FRONT BOX-N611	622002
8	121568-06-701	EA	CONTROL ASSY-OPTICAL/N611	621988
9	120075-01-720	EA	TRAY-DRIP	623250
9	120075-01-721	EA	LOUVER-DRIP TRAY	618176
11	121568-01-708	EA	SHELF - WIRE	620273
13	121568-01-707	EA	SHELF - WIRE - SHORT	620272
14	120075-01-725	EA	COVER-CRISPER	618158
15	121568-01-709	EA	CRISPER	618571
16	120075-01-727	EA	PIN-HINGE	618145
17	121568-03-701	EA	BUSHING - HINGE PIN/GRAY	619671
18	121568-03-715	EA	HINGE/CABINET-TOP/LH-LWR/RH	619336 WAFFLED
19	121568-03-716	EA	COVER - HINGE HOLES	619301
20	120075-01-729	EA	TRIM-BOTTOM PIECE	620958
21	121568-06-702	EA	CLIP - SHELF	61536522
22	121568-06-703	EA	HOLE PLUG - WHITE	620282
23	120075-01-732	EA	PLATE-STRIKE	618167

CONTACT WINNEBAGO PART SALES FOR UNLISTED COMPONENT(S)

COPYRIGHT © 2007 WINNEBAGO INDUSTRIES INC.

CABINET & APPLIANCE GROUP (CONTINUED)

COMPONENT PARTS FOR CABINET & APPLIANCE LAYOUT (CONTINUED)

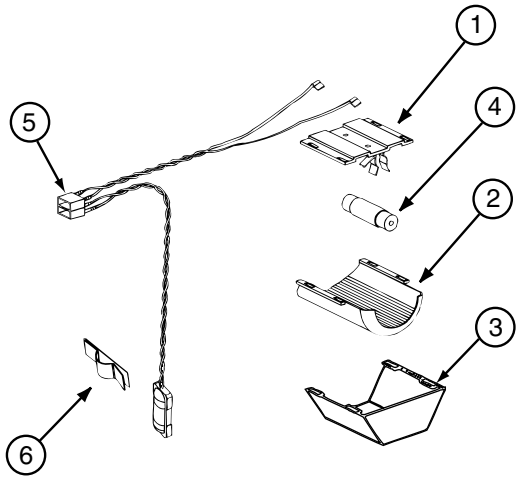

121568-03-01A, 121568-04-01A, 121568-05-01A, 121568-06-01A, 121568-07-01A, 121568-08-01A (CONTINUED)

KEY	PART NUMBER	U/M	DESCRIPTION	VENDOR NO.
1	084880-01-760	EA	CLIP (THERMISTER)	61689122
2	120075-01-735	EA	THERMISTER W/LAMP & WIRE/ASM	618548
3	084880-03-705	EA	BRACKET-LIGHT-INTERIOR	61629722
4	084880-03-706	EA	BULB-LAMP	61628922
6	084880-03-707	EA	COVER-LAMP, LENS	61627922
			CONTACT WINNEBAGO PART SALES FOR UNLISTED COMPONENT(S)	

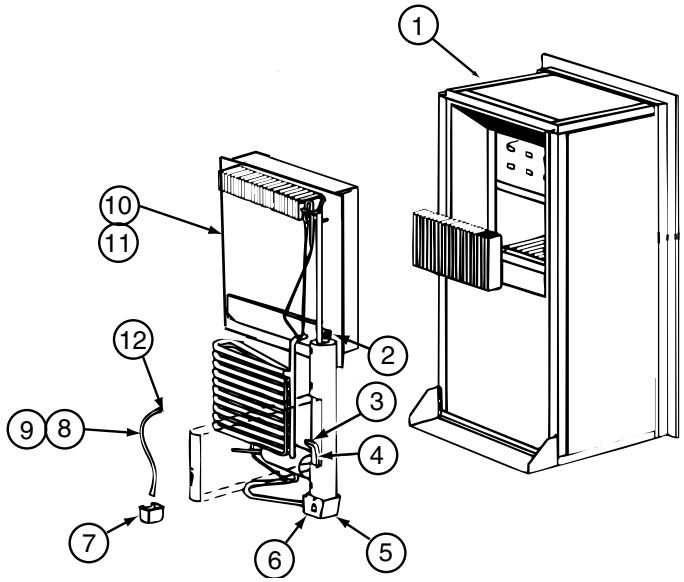

121568-06-01A, 121568-07-01A, 121568-08-01A (CONTINUED)

KEY	PART NUMBER	U/M	DESCRIPTION	VENDOR NO.
4	121568-06-704	EA	HEATER-AC/300W/120VAC	621702
10	120076-01-704	EA	COOLING UNIT, SERVICE PACK	618543
			CONTACT WINNEBAGO PART SALES FOR UNLISTED COMPONENT(S)	

COPYRIGHT © 2007 WINNEBAGO INDUSTRIES INC.

CABINET & APPLIANCE GROUP (CONTINUED)

COMPONENT PARTS FOR CABINET & APPLIANCE LAYOUT (CONTINUED)

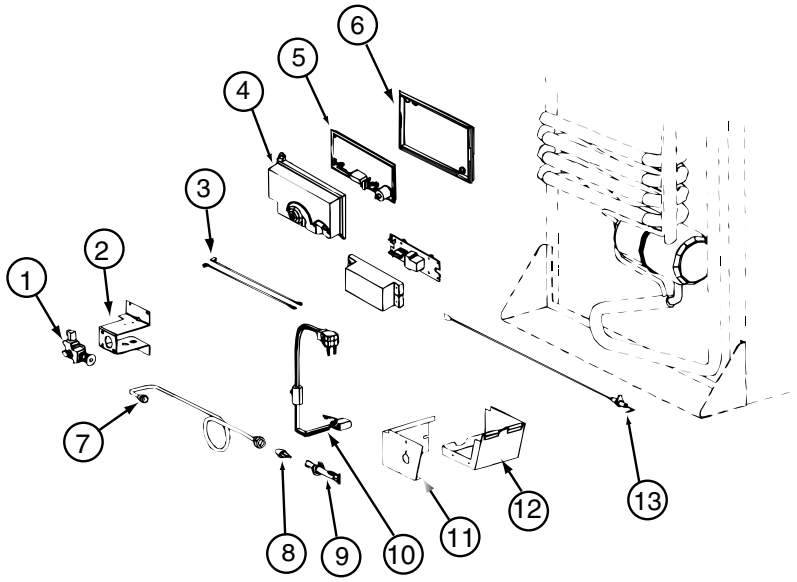

121568-06-01A, 121568-07-01A, 121568-08-01A (CONTINUED)

KEY	PART NUMBER	U/M	DESCRIPTION	VENDOR NO.
1	121568-06-705	EA	GAS VALVE/BRKT ASSY-COMBO	621439
1	121568-06-706	EA	GAS VALVE-COMBO/WRENCH FLAT	621329
4	120075-01-738	EA	COVER-POWER BOARD	618185
5	121568-06-707	EA	BOARD/POWER-N611	621991 = 621991001
6	120075-01-740	EA	COVER-BASE, POWER BOARD	618186
8	121568-06-708	EA	BURNER/ORFICE-ADAPTER KIT	621957
13	104137-06-715	EA	ELECTRODE-SPARK/SENSOR, SGL	61692222
			CONTACT WINNEBAGO PART SALES FOR UNLISTED COMPONENT(S)	

121568-05-01A, 121568-07-01A, 121568-08-01A (CONTINUED)

KEY	PART NUMBER	U/M	DESCRIPTION	VENDOR NO.
	121568-05-700	EA	FAN 12V KIT DBLE SIDEWALL	619020

COPYRIGHT © 2007 WINNEBAGO INDUSTRIES INC.

CABINET & APPLIANCE GROUP (CONTINUED)

COMPONENT PARTS FOR CABINET & APPLIANCE LAYOUT (CONTINUED)

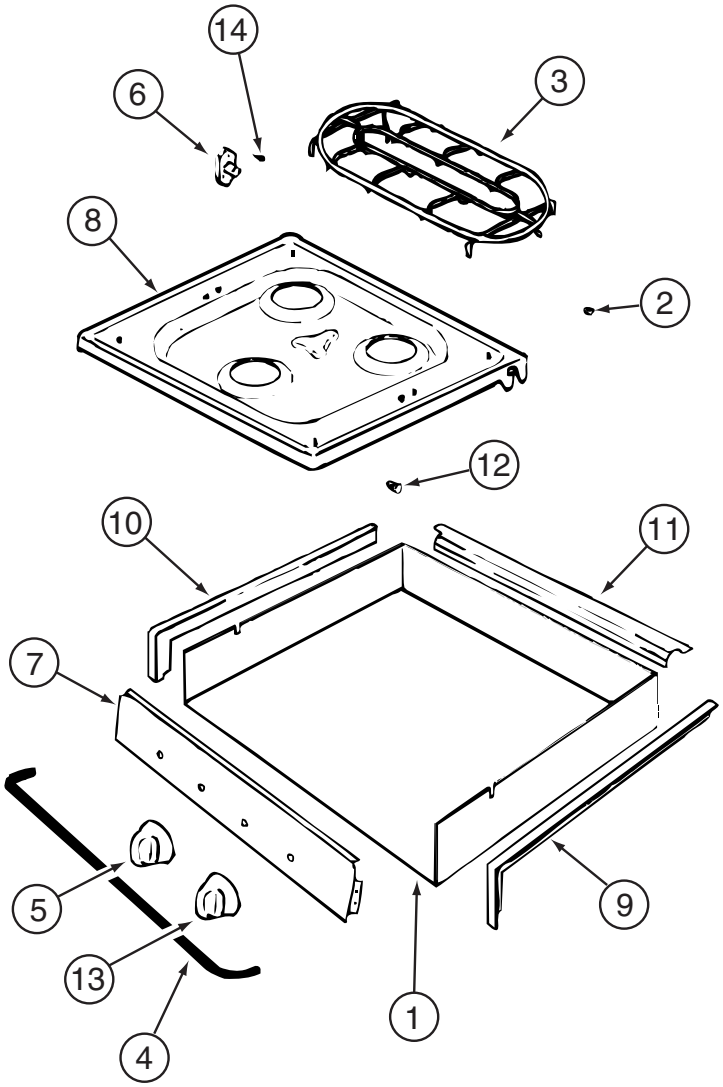

135065-03-01A, 135065-03-03A, 135065-04-01A

KEY	PART NUMBER	U/M	DESCRIPTION	VENDOR NO.
2	102020-01-709	EA	BUMPER-GRATE	8007-P020-60
3	135065-03-703	EA	GRATE - BLACK(SEALED BURNER)	74007304
4	114030-02-700	EA	GUARD/FABRIC - TOWEL BAR	3609F006-70
5	128728-01-701	EA	KNOB - BURNER - REAR	74003941
5	128728-01-702	EA	KNOB - BURNER - FRONT	74003942
6	128728-01-703	EA	PIN/T-NUT F/HINGE	7103P109-60
7	135065-03-704	EA	PANEL - MANIFOLD (BLACK)	74007330
8	128728-01-705	EA	TOP - MAIN - BLACK	74003928
8	135065-03-715	EA	TOP - MAIN - STAINLESS STEEL	74007299
9	114030-01-704	EA	TRIM - RIGHT/BLACK TEXTURED	74002839
10	114030-01-705	EA	TRIM - LEFT/BLACK TEXTURED	74002840
11	114030-01-706	EA	TRIM - REAR/BLACK TEXTURED	74002841
12	102020-01-724	EA	BUMPER-MAIN TOP	8003P008-60
13	128728-01-707	EA	KNOB - IGNITOR	74003944
			CONTACT WINNEBAGO PART SALES FOR UNLISTED COMPONENT(S)	

COPYRIGHT © 2007 WINNEBAGO INDUSTRIES INC.

CABINET & APPLIANCE GROUP (CONTINUED)

COMPONENT PARTS FOR CABINET & APPLIANCE LAYOUT (CONTINUED)

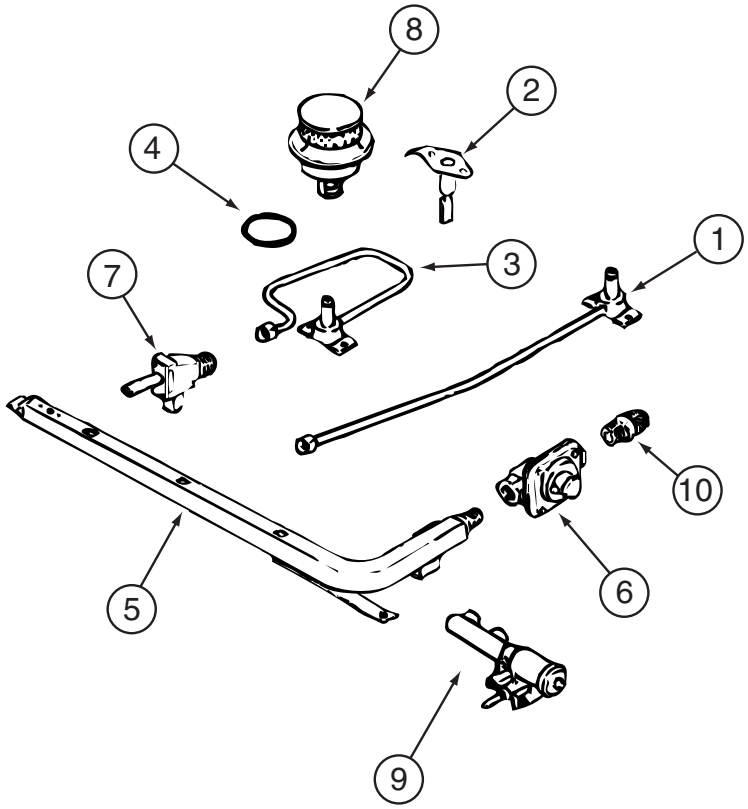

135065-03-01A, 135065-03-03A, 135065-04-01A (CONTINUED)

KEY	PART NUMBER	U/M	DESCRIPTION	VENDOR NO.
1	128728-01-708	EA	FITTING W/ORFICE/TUBE - REAR	74003931
2	135065-01-701	EA	IGNITOR/PORCELAIN-TOP BURNER	74004053
3	128728-01-710	EA	FITTING W/ORFICE/TUBE - FRT	74003930
4	135065-03-700	EA	FITTING - HALF UNION	74004234
5	135065-01-702	EA	PIPE/MANIFOLD	74004642
6	126023-02-703	EA	REGULATOR - PRESSURE	74004235
7	135065-01-703	EA	VALVE/BURNER - REAR	74004643
7	135065-01-704	EA	VALVE/BURNER-FRT-HI	74004644
7	135065-03-701	EA	SCREW - VALVE	71003231
8	135065-03-702	EA	SEALED BURNER ASM.(BLACK) RV	74003967
9	128728-01-716	EA	BURNER - IGNITOR	74003946
9	128728-01-717	EA	WIRES - IGNITOR	74003947

COPYRIGHT © 2007 WINNEBAGO INDUSTRIES INC.

CABINET & APPLIANCE GROUP (CONTINUED)

COMPONENT PARTS FOR CABINET & APPLIANCE LAYOUT (CONTINUED)

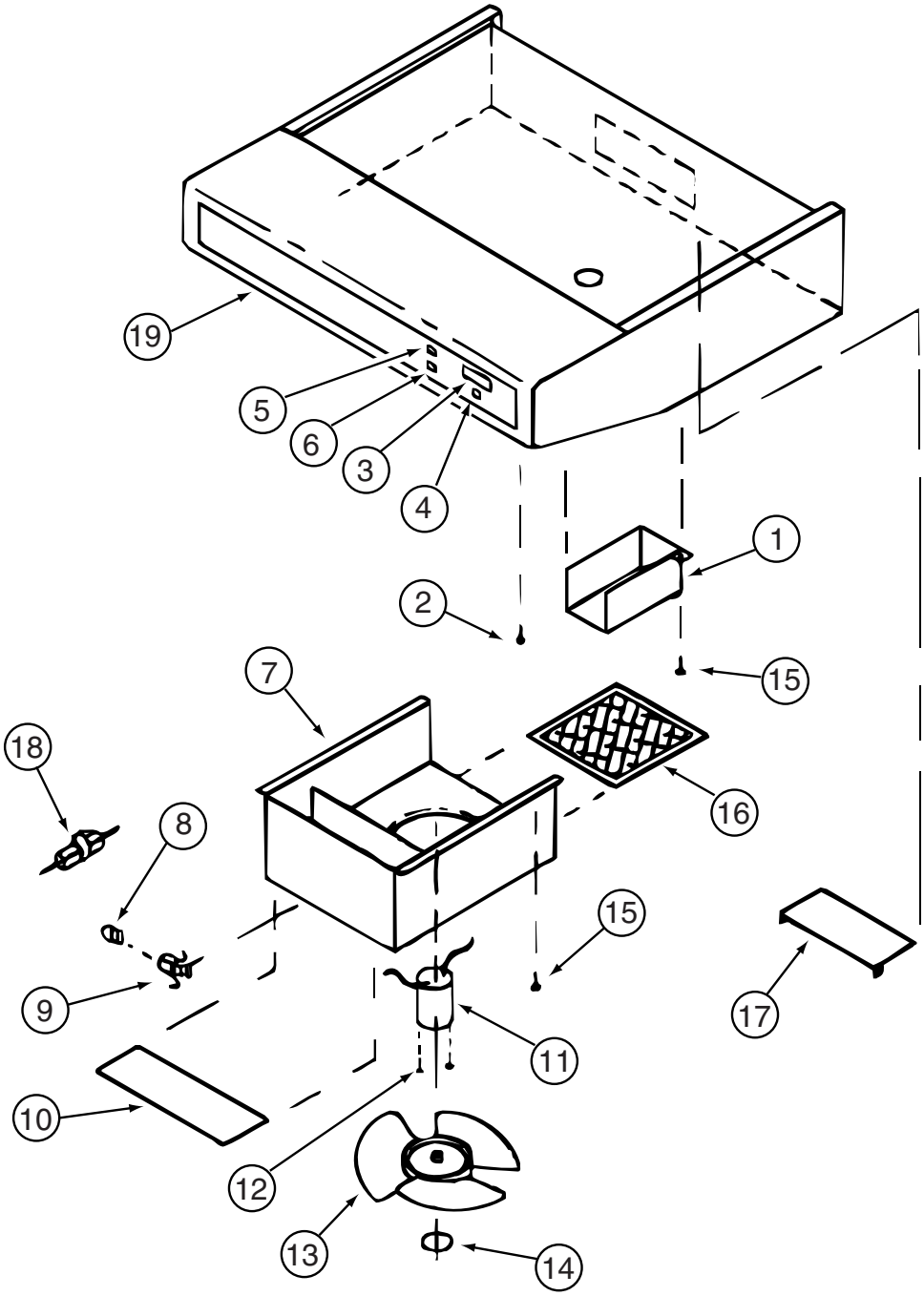

136354-01-01A, 136354-02-01A

KEY	PART NUMBER	U/M	DESCRIPTION	VENDOR NO.
3	100258-10-700	EA	GAUGE-HOUR METER, SCREW ON	L0150-00 WAS 150
4	096983-01-702	EA	SWITCH - MOM/OFF/MOM/3 TERM	L0112-00
6	096983-01-700	EA	SWITCH/1 SPEED -ON/OFF- BLK	00108-00
8	092696-01-709	EA	LAMP #912	VA415
9	092696-01-710	EA	HOLDER-LAMP	CB267-2
10	092696-02-701	EA	LENS-LAMP	CC179-2
11	090973-01-700	EA	MOTOR-12 VOLT, CSA & UL	CA508-1
13	090973-01-702	EA	BLADE-FAN	VA183-1
16	096983-01-707	EA	FILTER-MESH	CC246
17	100258-01-701	EA	DAMPER ASSEMBLY (METAL FLAP)	CAO-565-00
19	100258-01-700	EA	LABEL-HOOD NOSE	CC0428-00
			CONTACT WINNEBAGO PART SALES FOR UNLISTED COMPONENT(S)	

COPYRIGHT © 2007 WINNEBAGO INDUSTRIES INC.

CABINET & APPLIANCE GROUP (CONTINUED)

COMPONENT PARTS FOR CABINET & APPLIANCE LAYOUT (CONTINUED)

136354-05-01A, 136354-05-02A

KEY	PART NUMBER	U/M	DESCRIPTION	VENDOR NO.
3	100258-10-700	EA	GAUGE-HOUR METER, SCREW ON	L0150-00 WAS 150
4	096983-01-702	EA	SWITCH - MOM/OFF/MOM/3 TERM	L0112-00
6	096983-01-700	EA	SWITCH/1 SPEED -ON/OFF- BLK	L0108-00
8	117806-01-000	EA	BULB-12V NO.912 1.0 AMPS	GENERAL MOTOR HOMES
9	092696-01-710	EA	HOLDER-LAMP	CB267-02
10	096983-01-708	EA	LENS-LAMP	CC0179
11	136354-05-700	EA	MOTOR-12 VOLT	VC0536-02
13	136354-05-701	EA	BLADE-FAN 7" DIA	VD0216-00
16	096983-01-707	EA	FILTER-MESH	CC0246-00
17	100258-01-701	EA	DAMPER ASSEMBLY (METAL FLAP)	CA0565-00
19	100258-01-700	EA	LABEL-HOOD NOSE	CC0428-00
			CONTACT WINNEBAGO PART SALES FOR UNLISTED COMPONENT(S)	

136354-06-01A, 136354-06-02A

KEY	PART NUMBER	U/M	DESCRIPTION	VENDOR NO.
3	100258-10-700	EA	GAUGE-HOUR METER, SCREW ON	L0150-00 WAS 150
4	096983-01-702	EA	SWITCH - MOM/OFF/MOM/3 TERM	L0112-00
5	096983-01-700	EA	SWITCH/1 SPEED -ON/OFF- BLK	L0108-00
8	117806-01-000	EA	BULB-12V NO.912 1.0 AMPS	GENERAL MOTOR HOMES
9	092696-01-710	EA	HOLDER-LAMP	CB0267-02
10	096983-01-708	EA	LENS-LAMP	CC0179
11	136354-06-700	EA	MOTOR - FAN (CSA)	VC0535-02
13	136354-05-701	EA	BLADE-FAN 7" DIA	VD0216-00
16	096983-01-707	EA	FILTER-MESH	CC0246-00
17	100258-01-701	EA	DAMPER ASSEMBLY (METAL FLAP)	CA0565-00
19	100258-01-700	EA	LABEL-HOOD NOSE	CC0428-00
			CONTACT WINNEBAGO PART SALES FOR UNLISTED COMPONENT(S)	

150606-04-01A, 150606-04-02A

KEY	PART NUMBER	U/M	DESCRIPTION	VENDOR NO.
	150606-04-700	EA	RACK - BAKING	FAMI-A104WRM0

COPYRIGHT © 2007 WINNEBAGO INDUSTRIES INC.

CABINET & APPLIANCE GROUP (CONTINUED)

COMPONENT PARTS FOR CABINET & APPLIANCE LAYOUT (CONTINUED)

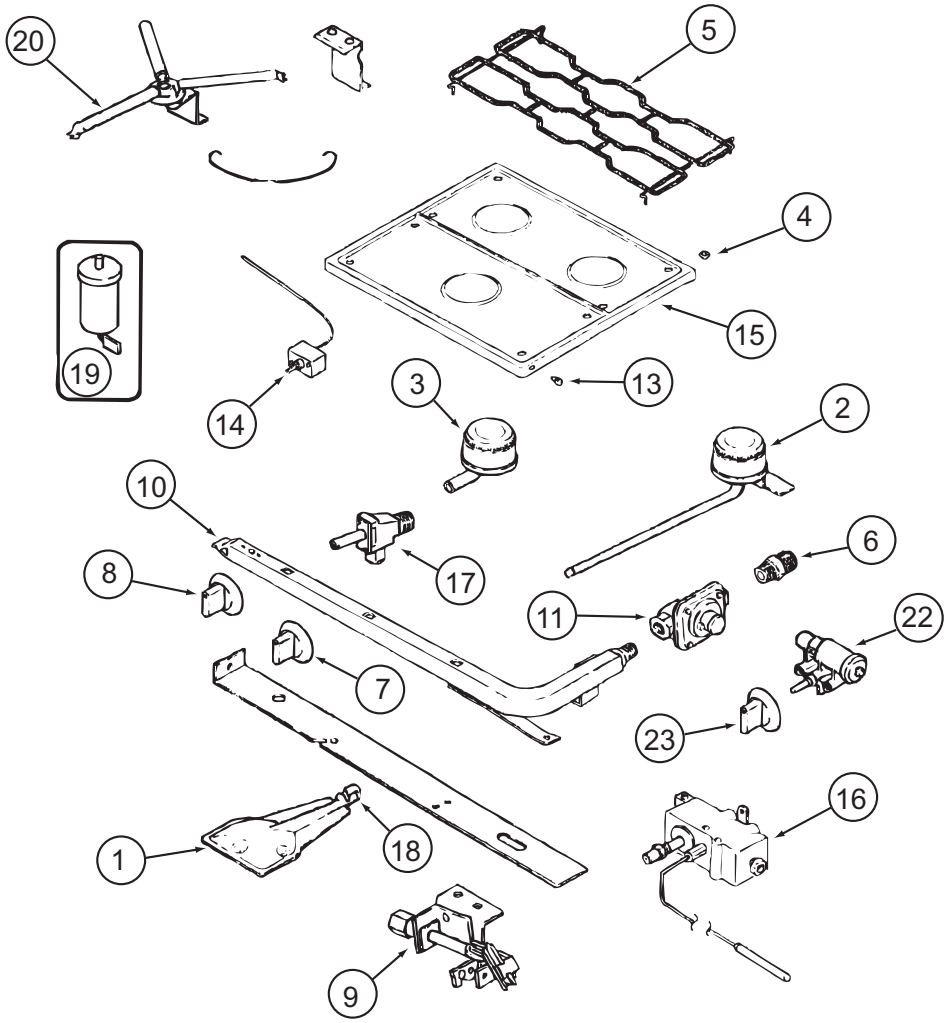

151277-01-01A, 151277-02-01A

KEY	PART NUMBER	U/M	DESCRIPTION	VENDOR NO.
1	151279-02-700	EA	BURNER - OVEN - W/SHUTTER	74009853
2	112881-04-700	EA	BURNER - TOP/LEFT REAR	74004584
2	126023-01-700	EA	BURNER-TOP (RT-REAR) 5100BTU	74004583
3	112881-04-701	EA	BURNER - TOP/FRONT	74004582
4	102020-01-709	EA	BUMPER-GRATE	8007P020-60
5	112881-04-702	EA	GRATE - BLACK	74007277
6	135065-03-700	EA	FITTING - HALF UNION	74004234
7	128728-01-701	EA	KNOB - BURNER - REAR	74003941 (1 PER)
7	128728-01-702	EA	KNOB - BURNER - FRONT	74003942 (2 PER)
8	151279-02-701	EA	KNOB - THERMOSTAT - BLACK	74009858
9	151279-01-700	EA	PILOT - BURNER - 16” SERIES	74009852
10	151279-02-702	EA	PIPE - MANIFOLD	74009856
11	112881-03-701	EA	REGULATOR KIT W/FITTINGS	12001285
13	102020-01-724	EA	BUMPER-MAIN TOP	8003P008-60
14	151279-02-703	EA	THERMOSTAT	74009855
15	151277-01-700	EA	TOP - MAIN (BLACK)	74007287
16	151279-02-704	EA	ELBOW BLOCK ASM (VALVE-OVEN)	74009864
17	151277-01-701	EA	VALVE/REAR - W/SET SCREW	12002254
17	151277-01-702	EA	VALVE/FRONT - W/SET SCREW	12002246
19	112881-04-705	EA	PUSH RING (ELECTRODE MTG)	7104P002-60
19	126023-01-711	EA	ELECTRODE - IGNITER (ONLY)	7432P077-60
20	126023-01-736	EA	FLASH TUBE EXTENSION (REAR)	74003326
20	126023-01-737	EA	FLASH TUBE EXTENSION (FRONT)	74003327
21	112881-04-708	EA	CLIP-FLASH TUBE	7112P068-60
22	126023-01-735	EA	KIT - IGNITOR TOP BRNER & KNOB	12001296=74002413&4
23	128728-01-707	EA	KNOB - IGNITOR	74003944
26	112881-04-709	EA	SHIELD-SPARK	3604F211-45

CONTACT WINNEBAGO PART SALES FOR UNLISTED COMPONENT(S)

COPYRIGHT © 2007 WINNEBAGO INDUSTRIES INC.

CABINET & APPLIANCE GROUP (CONTINUED)

COMPONENT PARTS FOR CABINET & APPLIANCE LAYOUT (CONTINUED)

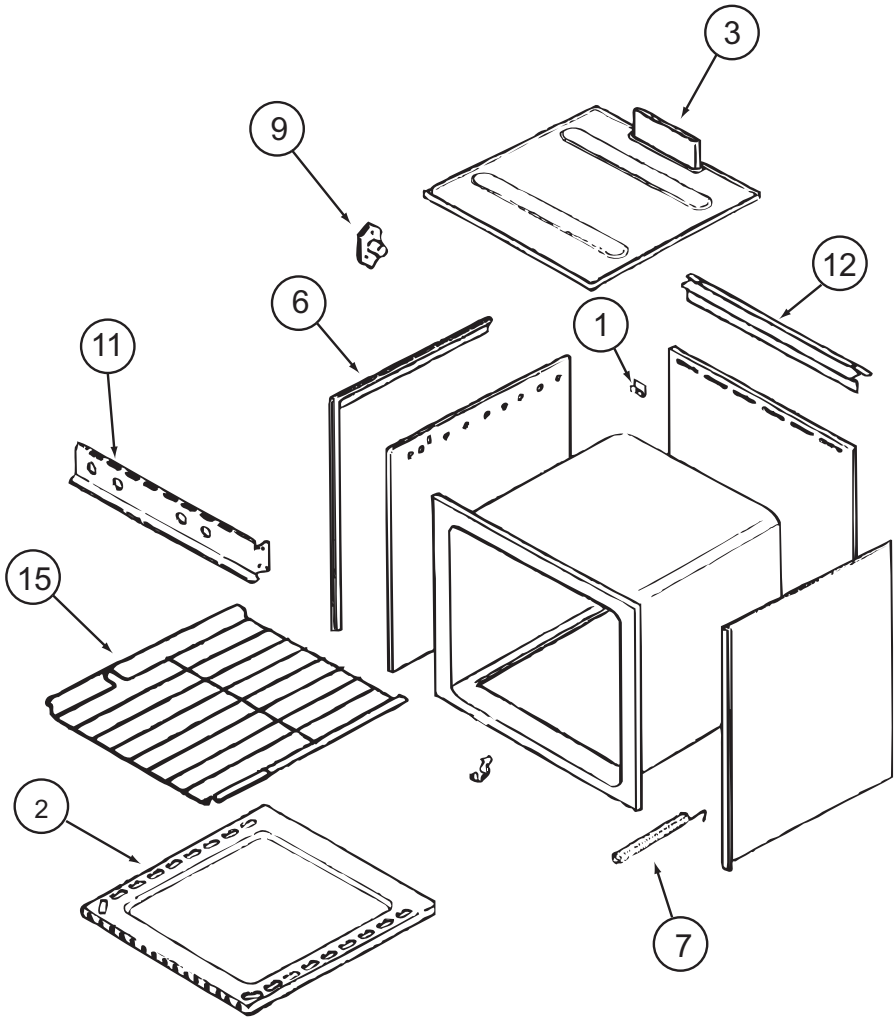

151277-01-01A (CONTINUED)

KEY	PART NUMBER	U/M	DESCRIPTION	VENDOR NO.
1	112881-03-702	EA	CLIP - MAIN TOP	74003998
2	126023-01-731	EA	BOTTOM - OVEN	2205F016-19
3	126023-01-718	EA	FLUE BOX ASSEMBLY	4006W075-80
6	126023-01-713	EA	TRIM - SIDE (RIGHT) BLACK	74002827
6	126023-01-714	EA	TRIM - SIDE (LEFT) BLACK	74002828
7	135066-03-700	EA	SPRING - OVEN DOOR	74001835
9	128728-01-703	EA	PIN/T-NUT F/HINGE	7103P109-60
11	112881-04-707	EA	MANIFOLD - BLACK	74007296
12	112881-01-721	EA	DEFLECT0R/FLUE-BLK-SEALED BR	74002829
15	126023-01-716	EA	RACK - OVEN	74003106
			CONTACT WINNEBAGO PART SALES FOR UNLISTED COMPONENT(S)	

112881-04-01A, 112881-05-01A, 151277-02-01A (CONTINUED)

KEY	PART NUMBER	U/M	DESCRIPTION	VENDOR NO.
1	112881-03-702	EA	CLIP - MAIN TOP	74003998
2	126023-01-731	EA	BOTTOM - OVEN	2205F016-19
3	126023-01-718	EA	FLUE BOX ASSEMBLY	4006W075-80
6	112881-01-719	EA	TRIM-FLAT LH BLACK TEXTURED	74002813
6	112881-01-720	EA	TRIM-FLAT RH BLACK TEXTURED	74002812
7	112881-02-702	EA	SPRING - OVEN DOOR F/1631 MOD	7803P051-60
9	128728-01-703	EA	PIN/T-NUT F/HINGE	7103P109-60
11	112881-04-707	EA	MANIFOLD - BLACK	74007296
12	112881-01-723	EA	DEFLECTOR/FLUE-BLK-NON SEAL	74002809
15	126023-01-716	EA	RACK - OVEN	74003106
			CONTACT WINNEBAGO PART SALES FOR UNLISTED COMPONENT(S)	

COPYRIGHT © 2007 WINNEBAGO INDUSTRIES INC.

CABINET & APPLIANCE GROUP (CONTINUED)

COMPONENT PARTS FOR CABINET & APPLIANCE LAYOUT (CONTINUED)

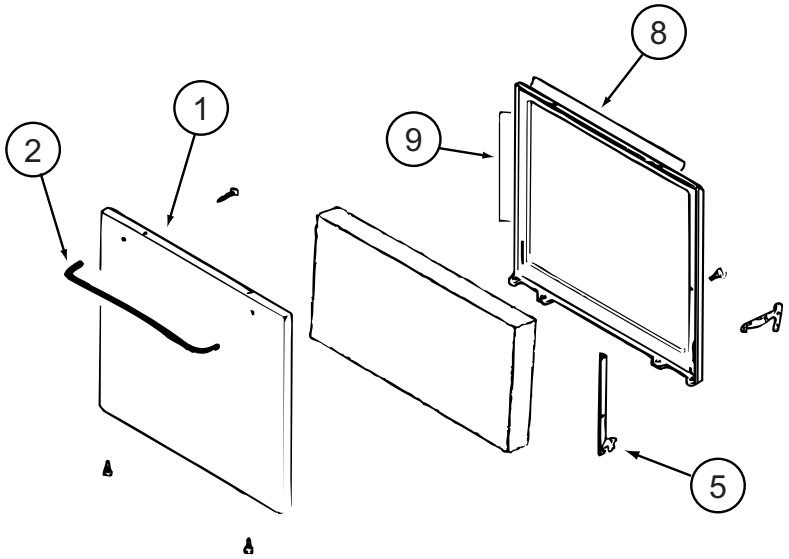

151277-01-01A (CONTINUED)

KEY	PART NUMBER	U/M	DESCRIPTION	VENDOR NO.
1	102022-01-704	EA	GLASS-OUTER	7902P261-60
1	112881-01-713	EA	DOOR/OVEN-TEXT/BLK NO WINDOW	2401F126-70
2	128727-01-701	EA	HANDLE - OVEN DOOR	74003929
5	151277-01-704	EA	HINGE KIT-OVEN DR/LT	12400028
5	151277-01-705	EA	HINGE KIT-OVEN DR/RT	12400029
8	126023-01-732	EA	SEAL/OVEN DR TOP	7212P014-60
9	135066-03-714	EA	SEAL - OVEN DOOR SIDES	7212P039-60
			CONTACT WINNEBAGO PART SALES FOR UNLISTED COMPONENT(S)	

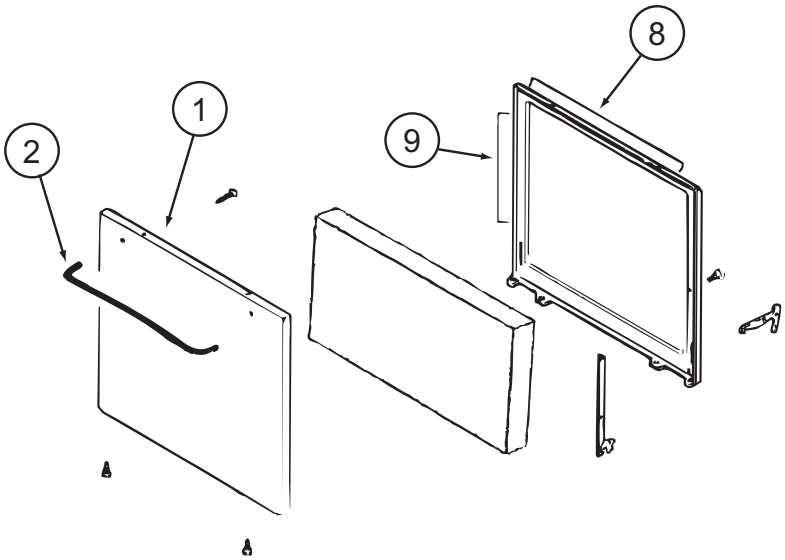

112881-04-01A, 112881-05-01A, 151277-02-01A (CONTINUED)

KEY	PART NUMBER	U/M	DESCRIPTION	VENDOR NO.
1	112881-01-713	EA	DR-TXT/BLK NO WNDW (112881-05/151277)	2401F126-70
1	112881-02-705	EA	DOOR-TXT/BLK-F/WINDOW (112881-04)	74001273
2	128727-01-701	EA	HANDLE - OVEN DOOR	74003929
8	126023-01-732	EA	SEAL/OVEN DR TOP	7212P014-60
9	126023-01-733	EA	SEAL/OVEN DR SIDES(2PCS)	7212P038-60
			CONTACT WINNEBAGO PART SALES FOR UNLISTED COMPONENT(S)	

COPYRIGHT © 2007 WINNEBAGO INDUSTRIES INC.

CABINET & APPLIANCE GROUP (CONTINUED)

COMPONENT PARTS FOR CABINET & APPLIANCE LAYOUT (CONTINUED)

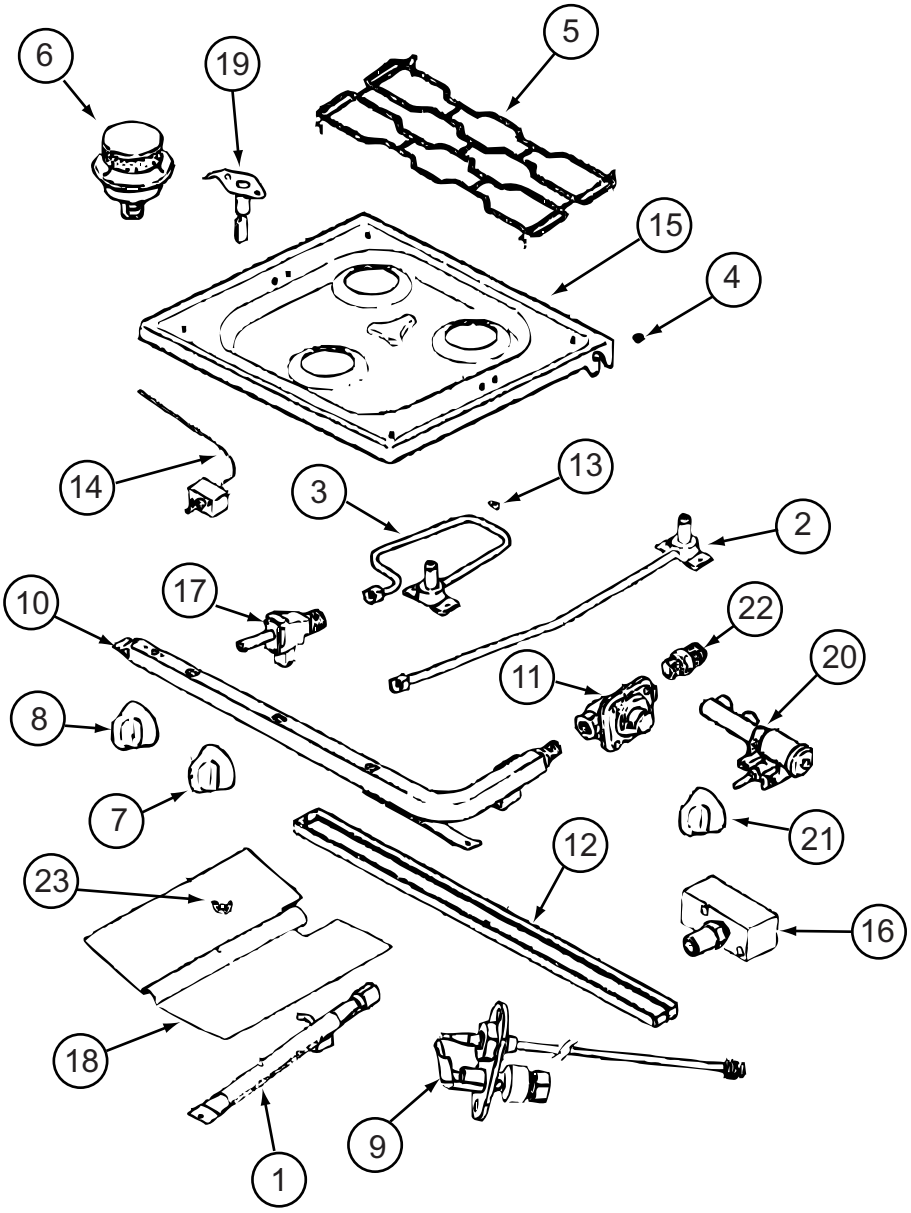

151277-03-01A, 151279-01-01A, 151279-02-01A/02A, 151279-03-01A

COPYRIGHT © 2007 WINNEBAGO INDUSTRIES INC.

CABINET & APPLIANCE GROUP (CONTINUED)

COMPONENT PARTS FOR CABINET & APPLIANCE LAYOUT (CONTINUED)

151277-03-01A, 151279-01-01A, 151279-02-01A/02A, 151279-03-01A (CONTINUED)

KEY	PART NUMBER	U/M	DESCRIPTION	VENDOR NO.
1	151279-02-700	EA	BURNER - OVEN - W/SHUTTER	74009853
2	128728-01-708	EA	FITTING W/ORFICE/TUBE - REAR	74003931
3	128728-01-710	EA	FITTING W/ORFICE/TUBE - FRT	74003930
4	102020-01-709	EA	BUMPER-GRATE	8007P020-60
5	135065-03-703	EA	GRATE - BLACK(SEALED BURNER)	74007304
6	135065-03-702	EA	SEALED BURNER ASM.(BLACK) RV	74003967
7	128728-01-701	EA	KNOB - BURNER - REAR	74003941 (1 PER)
7	128728-01-702	EA	KNOB - BURNER - FRONT	74003942 (2 PER)
8	151279-02-701	EA	KNOB - THERMOSTAT - BLACK	74009858
9	112881-04-706	EA	PILOT-OVEN (151279-01-01A ONLY)	74006334
9	151279-01-700	EA	PILOT-BURNER- 16" (151279-01-01A ONLY)	74009852
9	151279-02-705	EA	PILOT - OVEN - 22" SERIES	74010544
10	151279-02-702	EA	PIPE - MANIFOLD	74009856
11	126023-02-703	EA	REGULATOR - PRESSURE	74004235
11	112881-03-701	EA	REGULATOR KIT W/FITTINGS	12001285
13	102020-01-724	EA	BUMPER-MAIN TOP	8003P008-60
14	151279-02-703	EA	THERMOSTAT	74009855
15	128728-01-705	EA	TOP - MAIN - BLACK	74003928
15	135065-03-715	EA	TOP - MAIN - STAINLESS STEEL	74007299
16	151279-02-704	EA	ELBOW BLOCK ASM (VALVE-OVEN)	74009864
17	135065-01-703	EA	VALVE/BURNER - REAR	74004643
17	135065-01-704	EA	VALVE/BURNER-FRT-HI	74004644
18	135656-01-701	EA	MIXER/AIR	3411F003-34
19	135065-01-701	EA	IGNITOR/PORCELAIN-TOP BURNER	74004053
20	128728-01-716	EA	IGNITOR - F/BURNERS	74003946
20	128728-01-717	EA	WIRES - IGNITOR	74003947
21	128728-01-707	EA	KNOB - IGNITOR	74003944
22	135065-03-700	EA	FITTING - HALF UNION	74004234

CONTACT WINNEBAGO PART SALES FOR UNLISTED COMPONENT(S)

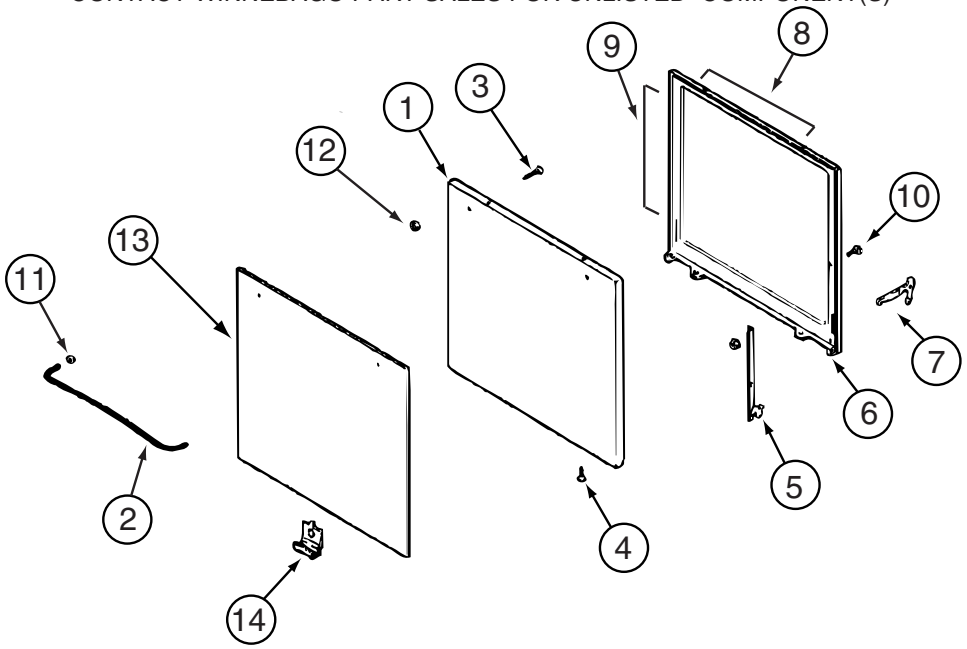

150778-01-01A, 151277-03-01A, 151279-02-01A, 151279-03-01A (CONTINUED)

KEY	PART NUMBER	U/M	DESCRIPTION	VENDOR NO.
1	126023-01-712	EA	PANEL - DOOR (BLACK)	74001190
2	128727-01-701	EA	HANDLE - OVEN DOOR	74003929
5	151277-01-704	EA	HINGE KIT-OVEN DR/LT	12400028
5	151277-01-705	EA	HINGE KIT-OVEN DR/RT	12400029
8	126023-01-732	EA	SEAL/OVEN DR TOP	7212P014-60
9	135066-03-714	EA	SEAL - OVEN DOOR SIDES	7212P039-60
13	102020-01-725	EA	GLASS OUTER	7902P266-60
14	126023-01-738	EA	CLIP - GLASS OVEN/BLACK	7112P093-60

CONTACT WINNEBAGO PART SALES FOR UNLISTED COMPONENT(S)

COPYRIGHT © 2007 WINNEBAGO INDUSTRIES INC.

CABINET & APPLIANCE GROUP (CONTINUED)

COMPONENT PARTS FOR CABINET & APPLIANCE LAYOUT (CONTINUED)

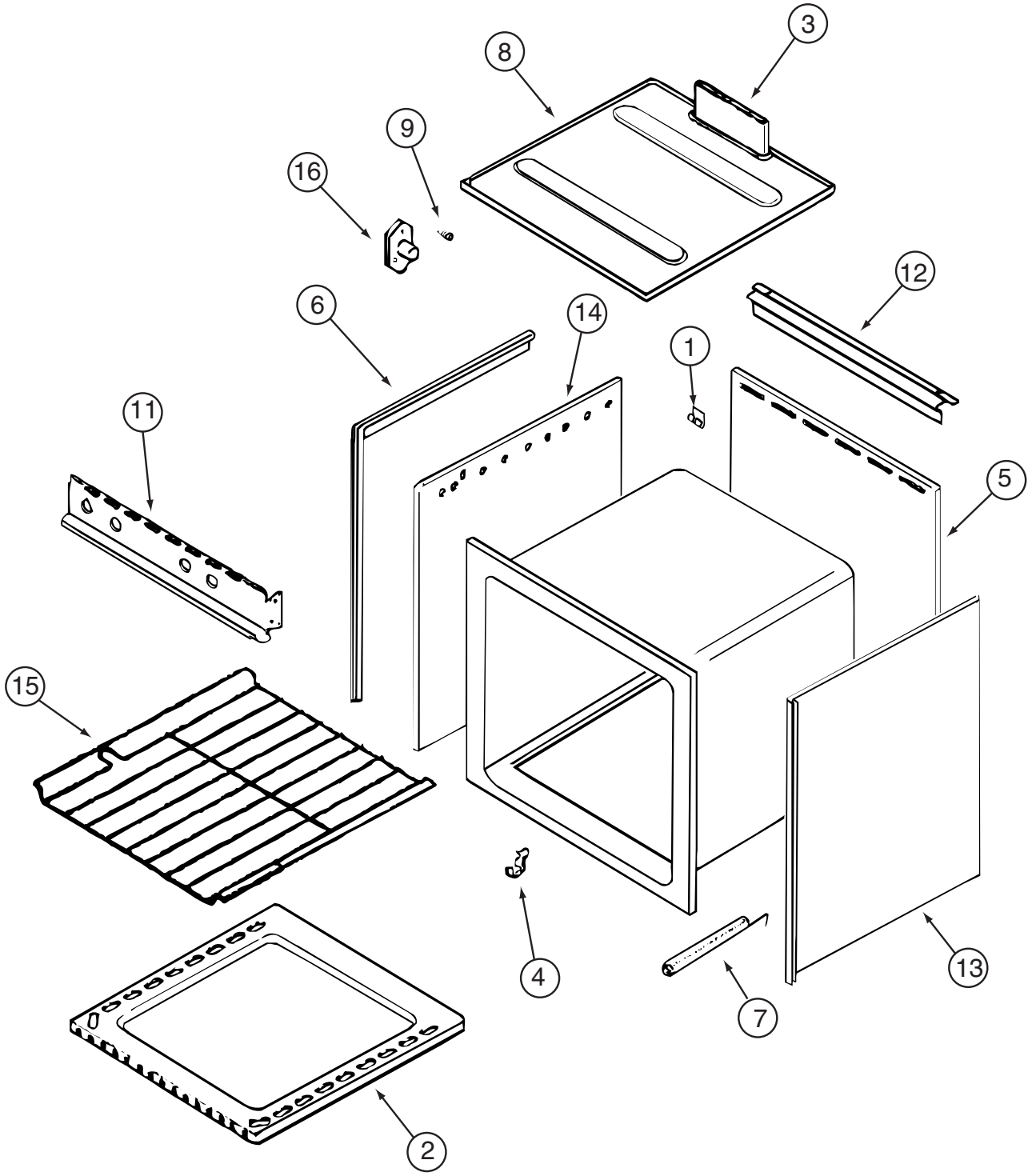

135066-03-01A/04A, 150778-01-01A, 151277-03-01A, 151279-02-01A/02A, 151279-03-01A (CONTINUED)

KEY	PART NUMBER	U/M	DESCRIPTION	VENDOR NO.
1	112881-03-702	EA	CLIP - MAIN TOP	74003998
2	126023-01-731	EA	BOTTOM - OVEN	2205F016-19
3	126023-01-718	EA	FLUE BOX ASSEMBLY	4006W075-80
6	126023-01-713	EA	TRIM - SIDE (RIGHT)	74002827
6	126023-01-714	EA	TRIM - SIDE (LEFT)	74002828
7	135066-03-708	EA	SPRING - OVEN DOOR	7803P053-60
9	128728-01-703	EA	PIN/T-NUT F/HINGE	7103P109-60
11	135066-03-701	EA	PANEL - MANIFOLD - BLACK	74007306
12	112881-01-721	EA	DEFLECTOR/FLUE-BLK-SEALED BR	74002829
15	126023-01-716	EA	RACK - OVEN	74003106

CONTACT WINNEBAGO PART SALES FOR UNLISTED COMPONENT(S)

COPYRIGHT © 2007 WINNEBAGO INDUSTRIES INC.

CHASSIS GROUP

FRAME

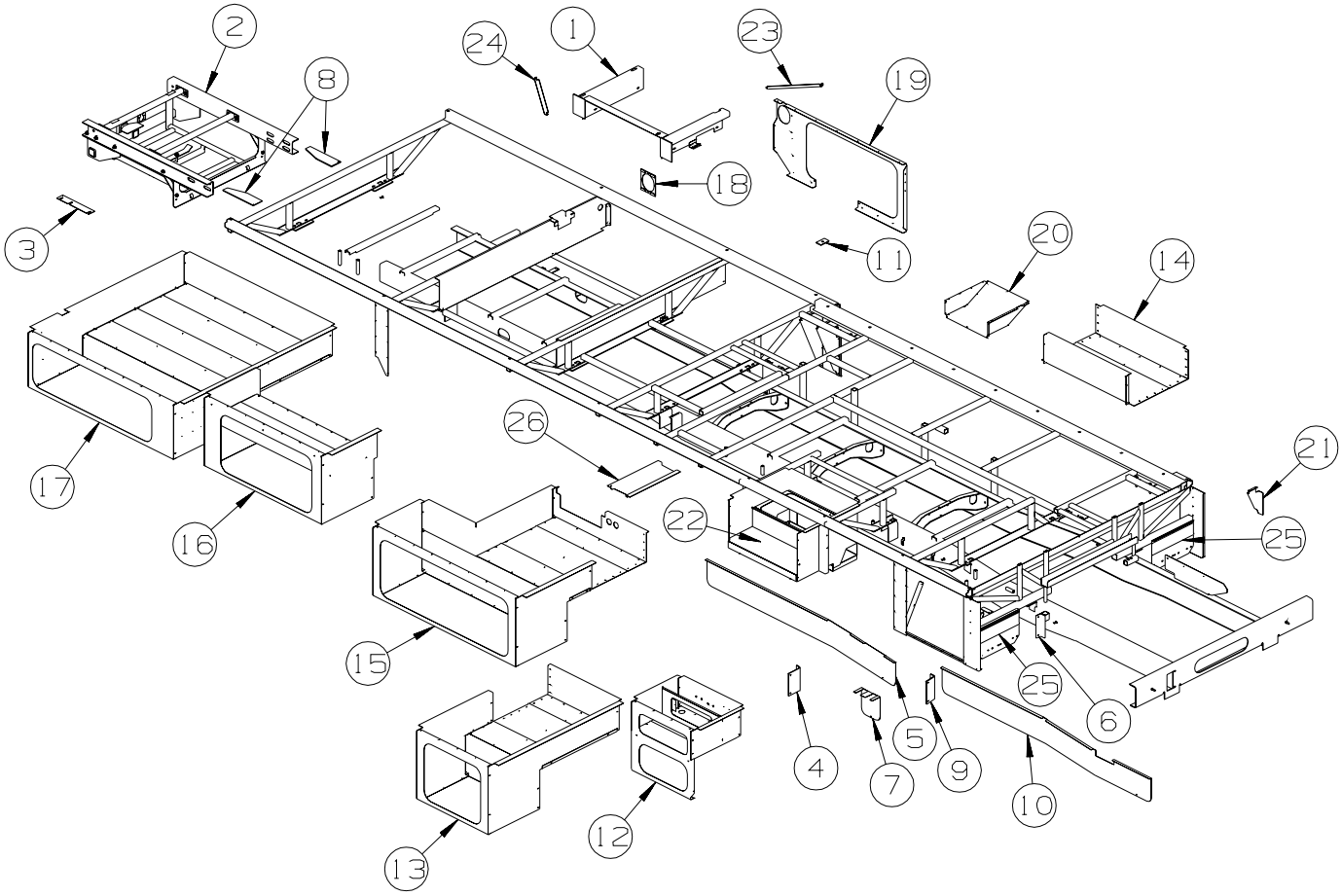

KEY	PART NUMBER	U/M	DESCRIPTION
1	138113-05-02B	EA	OUTRIGGER/GENERATOR - E-COATED
2	154052-07-01A	EA	CLIP/REAR EXTENSION RAIL - W/HITCH/TIRE CARRIER
3	136538-01-02B	EA	SHIM - HITCH - E-COATED
4	139188-01-02B	EA	BRACKET - LP SUPPORT
5	134325-01-02B	EA	SHIELD - HEAT/EXHAUST - E-COATED
6	139189-01-02B	EA	BRACKET - LP SUPPORT - E-COATED
7	134325-04-02B	EA	SHIELD - HEAT/EXHAUST - E-COATED
			FROM: 08-11-05 THRU: 99-99-99
8	133095-01-02B	EA	PLATE - CLIP - E-COATED
9	139188-02-02B	EA	BRACKET - LP SUPPORT
10	134325-01-02B	EA	SHIELD - HEAT/EXHAUST - E-COATED
			FROM: 00-00-00 THRU: 09-07-05
10	134325-02-02B	EA	SHIELD - HEAT/EXHAUST - E-COATED
			FROM: 09-08-05 THRU: 99-99-99
11	135712-01-02B	EA	PLATE - BODY MOUNT - E-COATED
12	137815-05-02B	EA	COMPARTMENT - RIGHT/FRONT - E-COATED
13	137814-08-02B	EA	COMPARTMENT - RIGHT - E-COATED
14	137814-09-02B	EA	COMPARTMENT - RIGHT - E-COATED
15	138726-09-02B	EA	COMPARTMENT - MIDDLE - E-COATED
16	138044-02-02B	EA	COMPARTMENT - DRAINAGE - RIGHT HAND - E-COATED
17	153020-08-02B	EA	COMPARTMENT - REAR - E-COATED
18	154223-01-02B	EA	SPACER/PLATE - FUEL FILL - E-COATED
19	142221-02-02B	EA	PLATE/SEAL - E-COATED
20	138056-05-02B	EA	PANEL - FURNACE COMPARTMENT - E-COATED
21	123440-14-02B	EA	SUPPORT - PANEL - 9.9"/7.6" X 4.8" - E-COATED
22	132607-08-02B	EA	BOX/ENTRANCE STEP - E-COATED
23	138075-09-02B	EA	ANGLE/SUPPORT - SEAL PLANE - E-COATED
24	138075-03-02B	EA	ANGLE/SUPPORT - SEAL PLANE - E-COATED
25	136391-01-02B	EA	GUARD/ROCK - STEEL - W/ANGLE - 18"W X 11"H - E-COATED
26	140963-01-02B	EA	SHIELD - EXHAUST - E-COATED - WORKHORSE

COPYRIGHT © 2007 WINNEBAGO INDUSTRIES INC.

CHASSIS GROUP (CONTINUED)

FRONT END

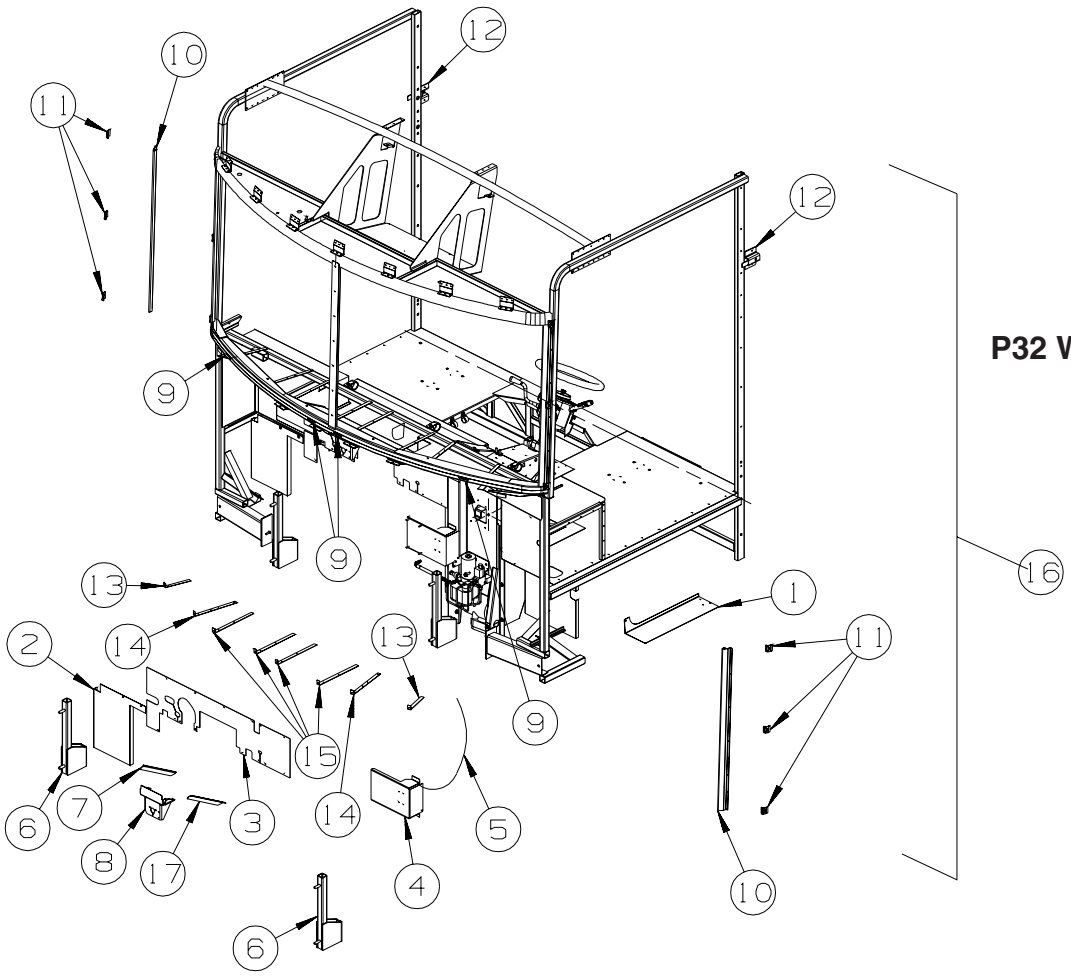

P32 WORKHORSE

KEY	PART NUMBER	U/M	DESCRIPTION
1	134371-01-01B	EA	ANGLE/MOUNT - WIPER MOTOR
2	121962-02-02B	EA	SHIELD/SPLASH - HEADLIGHT - E-COATED
3	117749-03-000	EA	BAFFLE - RADIATOR - TOP/P32
4	137355-02-02B	EA	BRACKET - RESERVOIR/WASHER - E-COATED
5	044317-01-000	FT	HOSE - FUEL - 3/8" ID
6	134807-01-02B	EA	SUPPORT - FRONT - E-COATED
7	134371-02-01B	EA	ANGLE/MOUNT - WIPER MOTOR
8	134506-01-01B	EA	BRACKET - WIPER MOTOR
9	126289-65-01B	EA	ANGLE - FORMED
10	137584-01-01B	EA	FRAME/PILLAR - WINDSHIELD
11	148935-01-01B	EA	BRACKET-WINDSHIELD
12	140387-02-01B	EA	MOUNT - SEATBELT/WALL - E-COATED
13	137047-06-01B	EA	STRAP - DEFROSTER PLENUM
14	137047-05-01B	EA	STRAP - DEFROSTER PLENUM
15	137047-04-01B	EA	STRAP - DEFROSTER PLENUM
16	148388-01-02B	EA	FRONT END

COPYRIGHT © 2007 WINNEBAGO INDUSTRIES INC.

CHASSIS GROUP (CONTINUED)

FRONT END (CONTINUED)

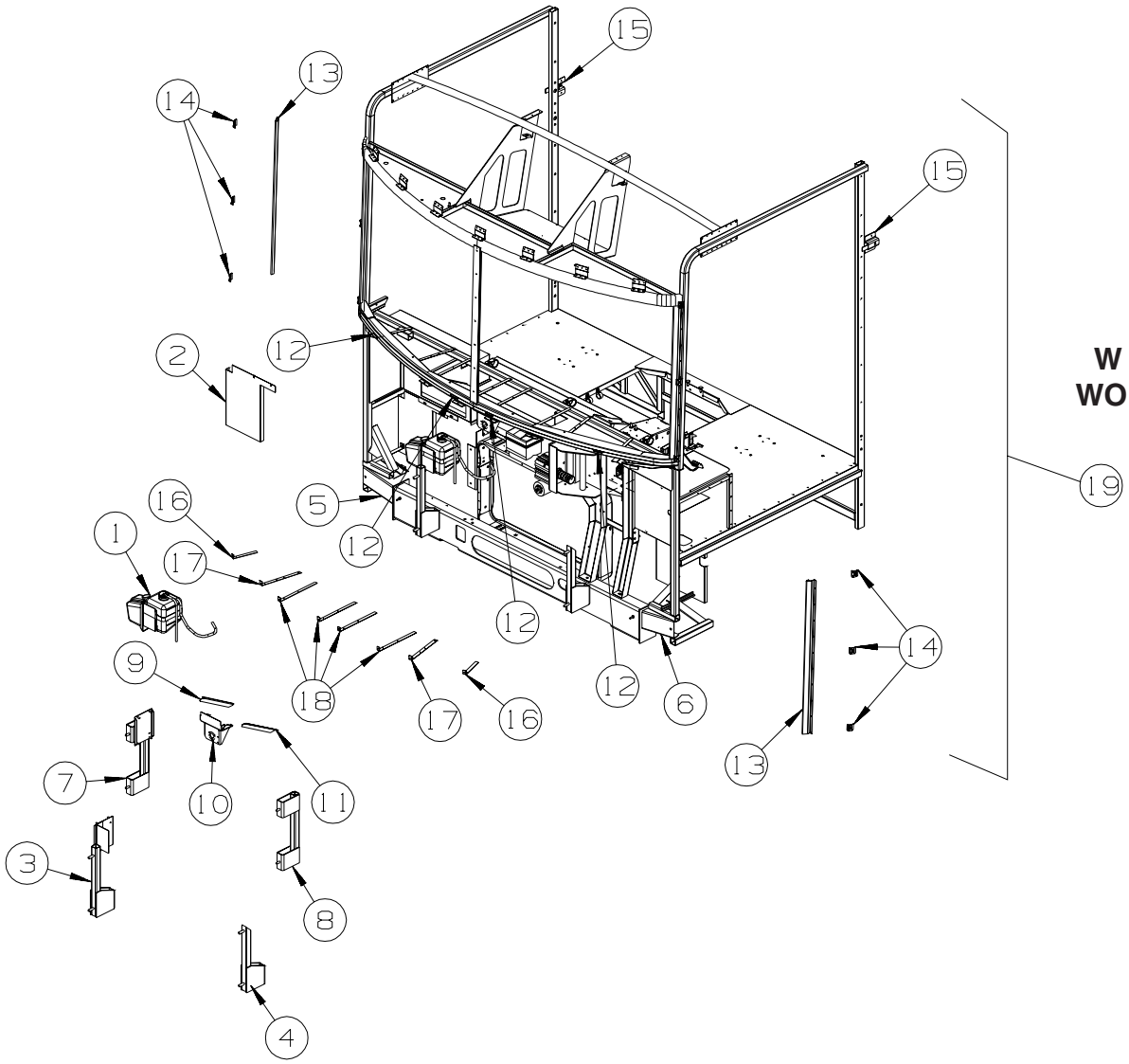

W - SERIES
WORKHORSE

KEY	PART NUMBER	U/M	DESCRIPTION
1	NOT USED		
2	121962-02-02B	EA	SHIELD/SPLASH - HEADLIGHT - E-COATED
3	134807-11-02B	EA	SUPPORT - FRONT - E-COATED
4	134807-12-02B	EA	SUPPORT - FRONT - E-COATED
5	137048-02-02B	EA	CHANNEL/SUPPORT - FRONT END - E-COATED
6	137048-01-02B	EA	CHANNEL/SUPPORT - FRONT END - E-COATED
7	NOT USED		
8	NOT USED		
9	134371-02-01B	EA	ANGLE/MOUNT - WIPER MOTOR
10	134506-01-01B	EA	BRACKET - WIPER MOTOR
11	134371-01-01B	EA	ANGLE/MOUNT - WIPER MOTOR
12	126289-65-01B	EA	ANGLE - FORMED
13	137584-01-01B	EA	FRAME/PILLAR - WINDSHIELD
14	148935-01-01B	EA	BRACKET-WINDSHIELD
15	140387-02-01B	EA	MOUNT - SEATBELT/WALL - E-COATED
16	137047-06-01B	EA	STRAP - DEFROSTER PLENUM
17	137047-05-01B	EA	STRAP - DEFROSTER PLENUM
18	137047-04-01B	EA	STRAP - DEFROSTER PLENUM
19	148388-03-02B	EA	FRONT END

COPYRIGHT © 2007 WINNEBAGO INDUSTRIES INC.

CHASSIS GROUP (CONTINUED)

FRONT END (CONTINUED)

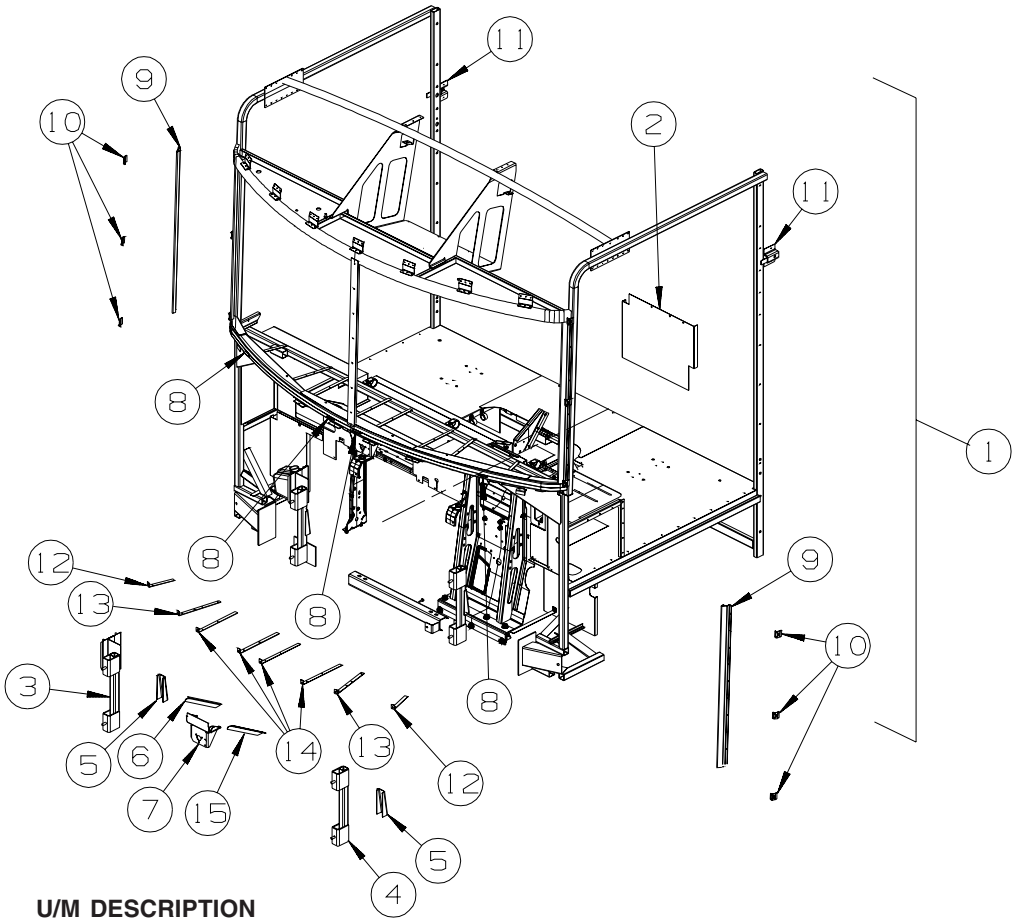

FORD

KEY	PART NUMBER	U/M	DESCRIPTION
1	153443-01-02B	EA	FRONT END - CHASSIS - E-COATED
2	144679-02-02B	EA	SHIELD/SPLASH - HEADLIGHT - E-COATED
3	152916-02-02B	EA	SUPPORT - FRONT - E-COATED
4	152916-01-02B	EA	SUPPORT - FRONT - E-COATED
5	117622-01-02B	EA	BRACE - TUBE/BUMPER - VERTICAL - E-COATED
6	134371-02-01B	EA	ANGLE/MOUNT - WIPER MOTOR
7	134506-01-01B	EA	BRACKET - WIPER MOTOR
8	126289-65-01B	EA	ANGLE - FORMED
9	137584-01-01B	EA	FRAME/PILLAR - WINDSHIELD
10	148935-01-01B	EA	BRACKET-WINDSHIELD
11	140387-02-01B	EA	MOUNT - SEATBELT/WALL - E-COATED
12	137047-04-01B	EA	STRAP - DEFROSTER PLENUM
13	137047-05-01B	EA	STRAP - DEFROSTER PLENUM
14	137047-06-01B	EA	STRAP - DEFROSTER PLENUM
15	134371-01-01B	EA	ANGLE/MOUNT - WIPER MOTOR

COPYRIGHT © 2007 WINNEBAGO INDUSTRIES INC.

CHASSIS GROUP (CONTINUED)

EXHAUST

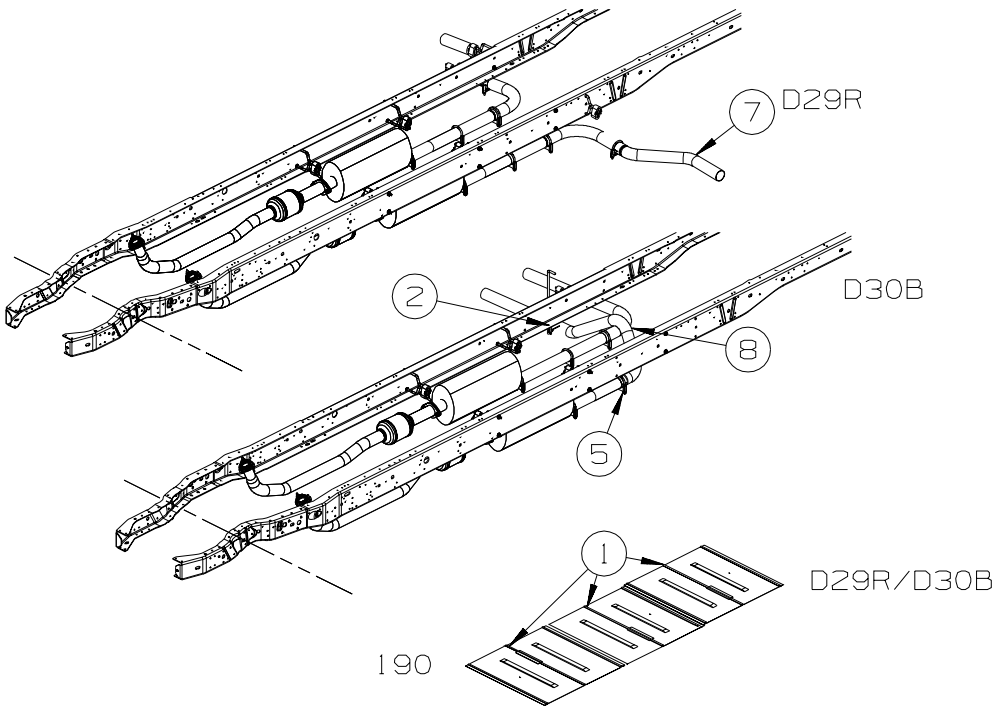

P32 WORKHORSE
D29R, D30B

KEY	PART NUMBER	U/M	DESCRIPTION
1	143712-02-02B	EA	SHIELD - HEAT/EXHAUST - E-COATED
2	122392-09-02B	EA	HANGER - TAILPIPE - E-COATED
3	N0T USED		
4	NOT USED		
5	094918-06-000	EA	CLAMP - EXHAUST - 3" - HEAVY DUTY
6	NOT USED		
7	129726-03-000	EA	PIPE - EXHAUST
8	141412-01-000	EA	PIPE - EXHAUST

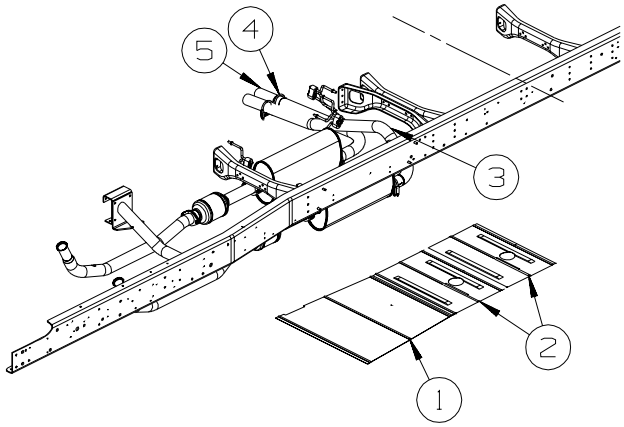

158.5" WHEELBASE

W - SERIES WORKHORSE
D26P

KEY	PART NUMBER	U/M	DESCRIPTION
1	128756-01-02B	EA	SHIELD - HEAT/EXHAUST - 33.9" X 16.9" - E-COATED
2	143712-01-02B	EA	SHIELD/HEAT - EXHAUST - E-COATED FROM: 00-00-00 THRU: 06-24-05
2	143712-07-02B	EA	SHIELD/HEAT - EXHAUST - E-COATED FROM: 06-25-05 THRU: 99-99-99
3	141412-01-000	EA	PIPE - EXHAUST
4	098762-05-000	EA	EXTENSION - EXHAUST - STRAIGHT - 3" O.D X 7.9" LONG - SST
5	155919-01-02B	EA	HANGER - TAILPIPE - DOUBLE - E-COATED

COPYRIGHT © 2007 WINNEBAGO INDUSTRIES INC.

CHASSIS GROUP (CONTINUED)
EXHAUST (CONTINUED)

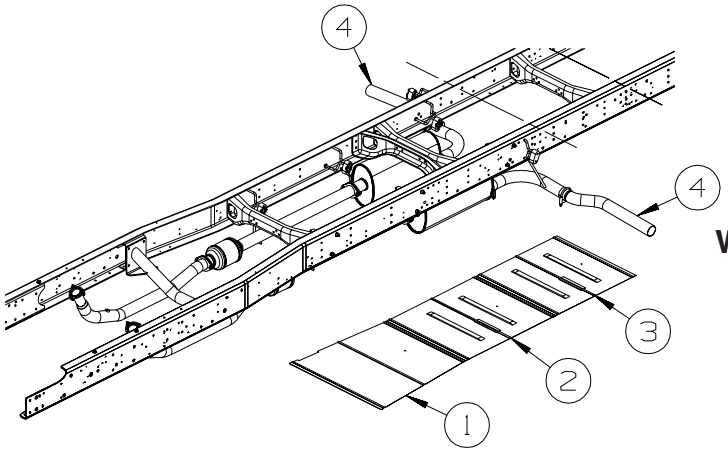

W - SERIES WORKHORSE
D29R

190" WHEELBASE

KEY	PART NUMBER	U/M	DESCRIPTION
1	128756-01-02B	EA	SHIELD - HEAT/EXHAUST - 33.9" X 16.9" - E-COATED
2	143712-05-02B	EA	SHIELD - HEAT/EXHAUST - E-COATED
3	143712-02-02B	EA	SHIELD - HEAT/EXHAUST - E-COATED
4	129726-02-000	EA	PIPE - EXHAUST

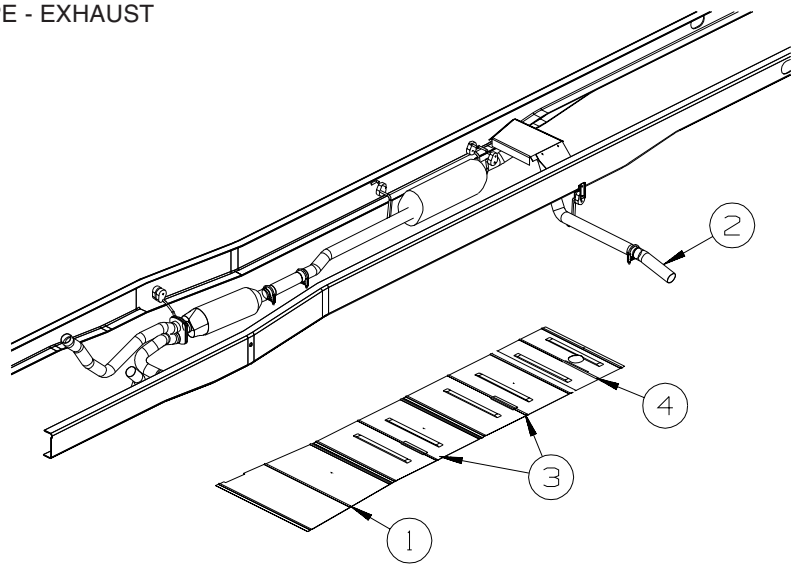

FORD
D29R

190" WHEELBASE

KEY	PART NUMBER	U/M	DESCRIPTION
1	128756-01-02B	EA	SHIELD - HEAT/EXHAUST - 33.9" X 16.9" - E-COATED
2	142985-01-000	EA	PIPE - EXHAUST
3	143712-05-02B	EA	SHIELD/HEAT - EXHAUST - E-COATED
4	143712-07-02B	EA	SHIELD/HEAT - EXHAUST - E-COATED

COPYRIGHT © 2007 WINNEBAGO INDUSTRIES INC.

CHASSIS GROUP (CONTINUED)
EXHAUST (CONTINUED)

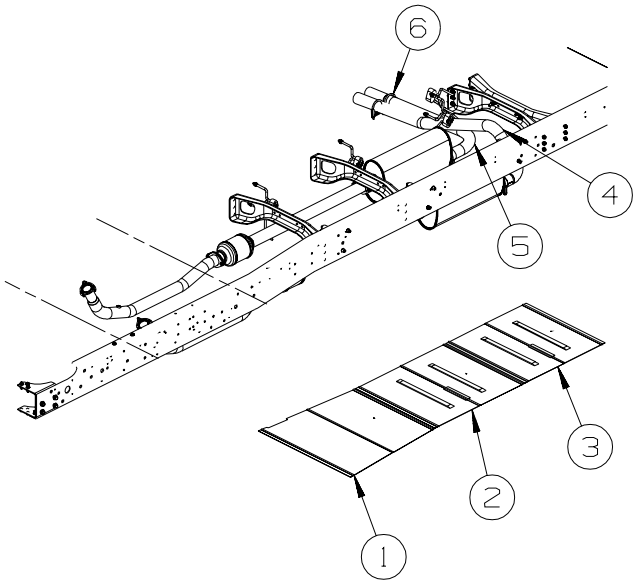

190" WHEELBASE

W - SERIES WORKHORSE
D30B

KEY	PART NUMBER	U/M	DESCRIPTION
1	128756-01-02B	EA	SHIELD - HEAT/EXHAUST - 33.9" X 16.9" - E-COATED
2	143712-05-02B	EA	SHIELD - HEAT/EXHAUST - E-COATED
3	143712-02-02B	EA	SHIELD - HEAT/EXHAUST - E-COATED
4	141412-01-000	EA	PIPE - EXHAUST
5	098762-05-000	EA	EXTENSION - EXHAUST - STRAIGHT - 3" O.D X 7.9" LONG - SST
6	155919-01-02B	EA	HANGER - TAILPIPE - DOUBLE - E-COATED

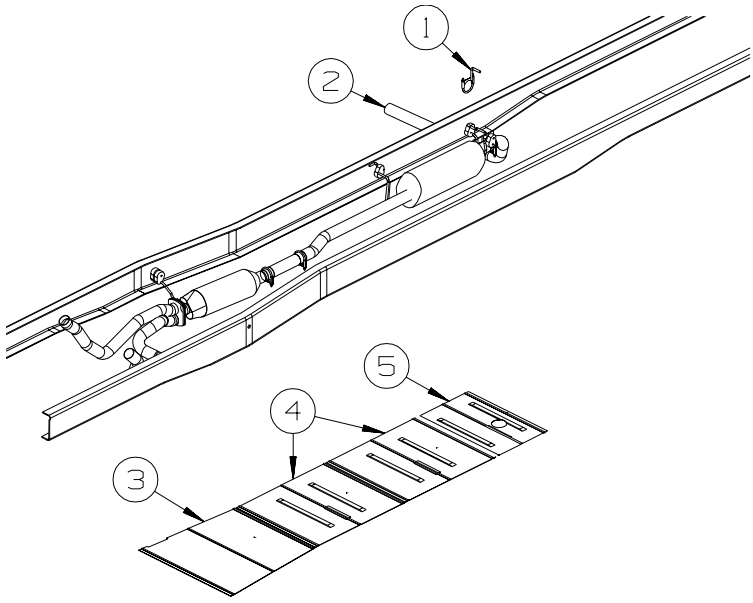

190" WHEELBASE

FORD
D30B

KEY	PART NUMBER	U/M	DESCRIPTION
1	122392-16-02B	EA	HANGER - TAILPIPE - E-COATED
	094918-01-000	EA	CLAMP - EXHAUST - 3" - GUILLOTINE STYLE
2	122529-03-000	EA	PIPE - EXHAUST
3	128756-01-02B	EA	SHIELD - HEAT/EXHAUST - 33.9" X 16.9" - E-COATED
4	143712-05-02B	EA	SHIELD/HEAT - EXHAUST - E-COATED
5	143712-07-02B	EA	SHIELD/HEAT - EXHAUST - E-COATED

COPYRIGHT © 2007 WINNEBAGO INDUSTRIES INC.

CHASSIS GROUP (CONTINUED)
EXHAUST (CONTINUED)

FORD
D33T

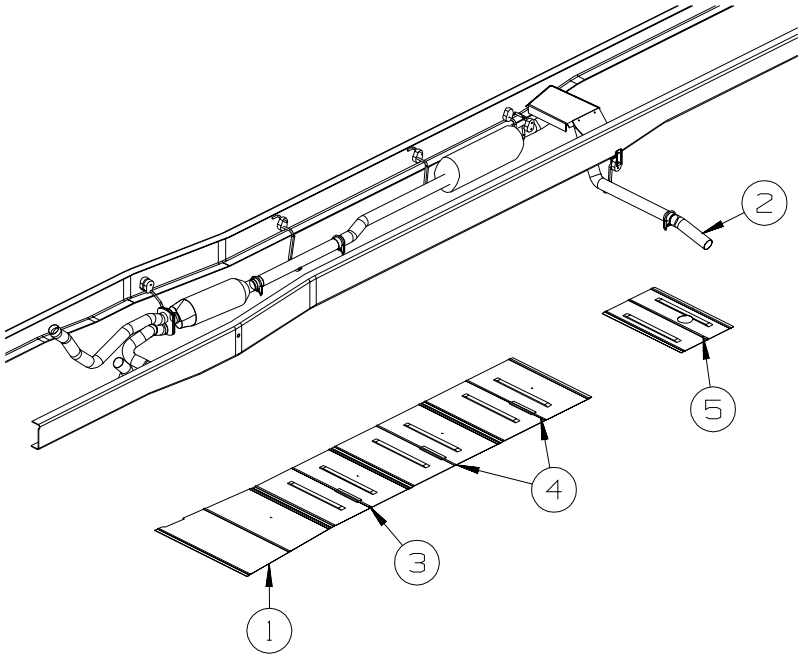

208" WHEELBASE

KEY	PART NUMBER	U/M	DESCRIPTION
1	128756-01-02B	EA	SHIELD - HEAT/EXHAUST - 33.9" X 16.9" - E-COATED
2	142985-01-000	EA	PIPE - EXHAUST
3	143712-02-02B	EA	SHIELD - HEAT/EXHAUST - E-COATED
4	143712-05-02B	EA	SHIELD/HEAT - EXHAUST - E-COATED
5	143712-07-02B	EA	SHIELD/HEAT - EXHAUST - E-COATED

FROM: 00-00-00 THRU: 02-15-06

W - SERIES WORKHORSE
D33T

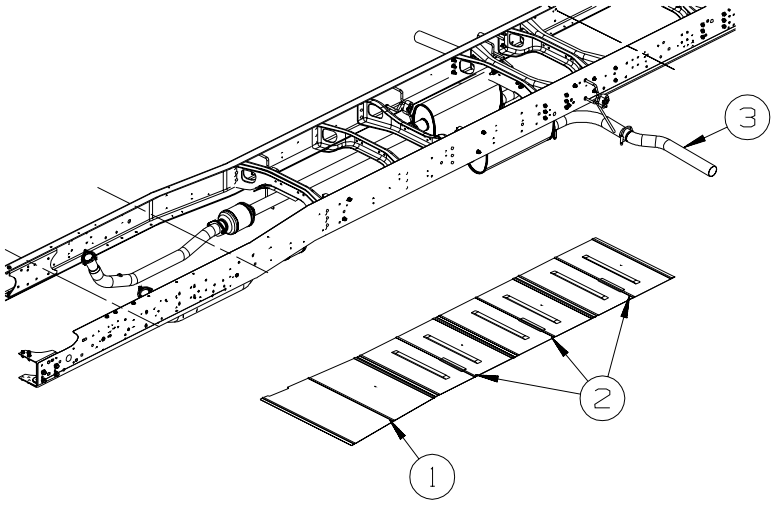

208" WHEELBASE

KEY	PART NUMBER	U/M	DESCRIPTION
1	128756-01-02B	EA	SHIELD - HEAT/EXHAUST - 33.9" X 16.9" - E-COATED
2	143712-02-02B	EA	SHIELD - HEAT/EXHAUST - E-COATED
3	129726-02-000	EA	PIPE - EXHAUST

COPYRIGHT © 2007 WINNEBAGO INDUSTRIES INC.

CHASSIS GROUP (CONTINUED)
EXHAUST (CONTINUED)

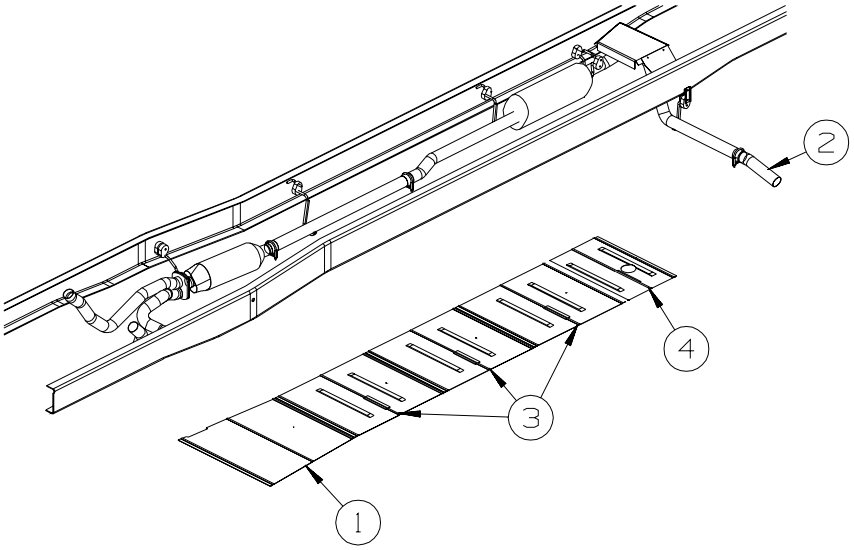

228" WHEELBASE

FORD
D34A, D35N

KEY	PART NUMBER	U/M	DESCRIPTION
1	128756-01-02B	EA	SHIELD - HEAT/EXHAUST - 33.9" X 16.9" - E-COATED
2	142985-01-000	EA	PIPE - EXHAUST
3	143712-05-02B	EA	SHIELD/HEAT - EXHAUST - E-COATED
4	143712-07-02B	EA	SHIELD/HEAT - EXHAUST - E-COATED

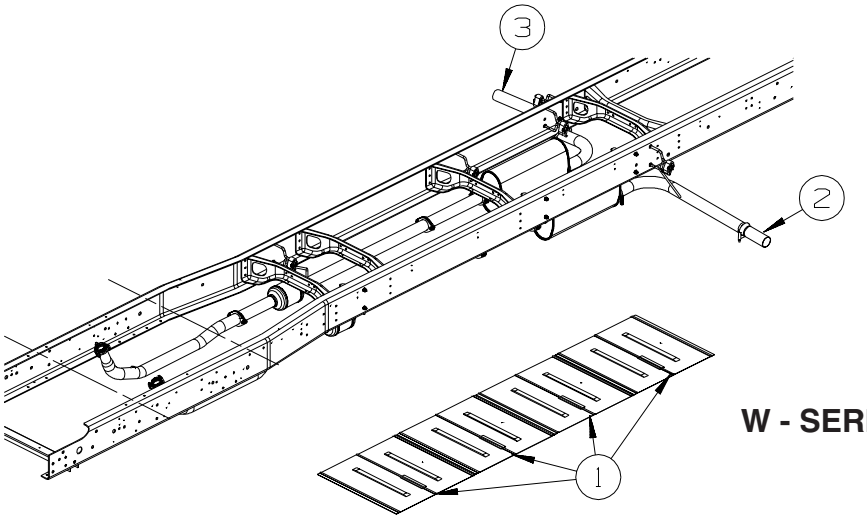

W - SERIES WORKHORSE
D34A

228" WHEELBASE

KEY	PART NUMBER	U/M	DESCRIPTION
1	143712-02-02B	EA	SHIELD - HEAT/EXHAUST - E-COATED
2	098762-05-000	EA	EXTENSION - EXHAUST - STRAIGHT - 3" O.D X 7.9" LONG - SST
	094918-01-000	EA	CLAMP - EXHAUST - 3" - GUILLOTINE STYLE
3	129726-02-000	EA	PIPE - EXHAUST

COPYRIGHT © 2007 WINNEBAGO INDUSTRIES INC.

CHASSIS GROUP (CONTINUED)
EXHAUST (CONTINUED)

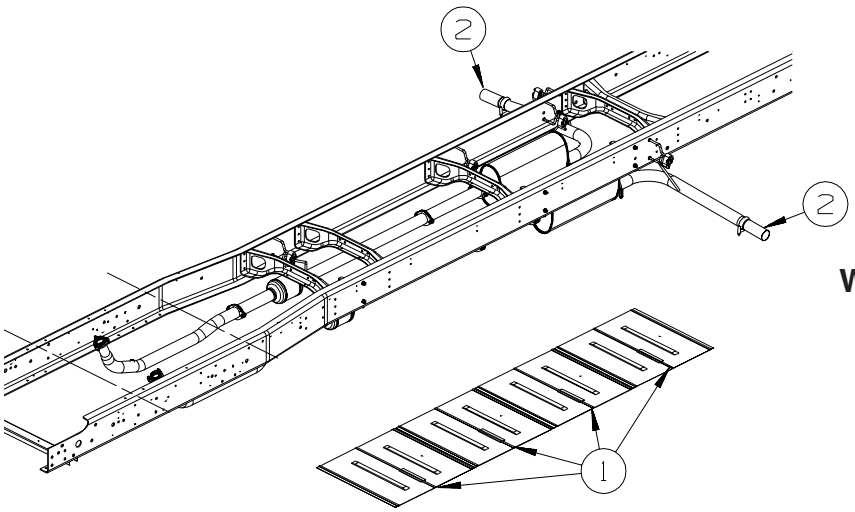

W - SERIES WORKHORSE
D35N

228" WHEELBASE

KEY	PART NUMBER	U/M	DESCRIPTION
1	143712-02-02B	EA	SHIELD - HEAT/EXHAUST - E-COATED
2	098762-05-000	EA	EXTENSION - EXHAUST - STRAIGHT - 3" O.D X 7.9" LONG - SST
	094918-01-000	EA	CLAMP - EXHAUST - 3" - GUILLOTINE STYLE

HITCH

D26P, D29R, D30B

KEY	PART NUMBER	U/M	DESCRIPTION
	154054-01-01A	EA	HITCH RECEIVER - BOLT ON CLASS III - BLACK
	140441-01-02B	EA	PLATE - SKID - E-COATED - WORKHORSE
	140441-03-02B	EA	PLATE - SKID - E-COATED - D29R FORD

COPYRIGHT © 2007 WINNEBAGO INDUSTRIES INC.

CHASSIS GROUP (CONTINUED)

FUEL

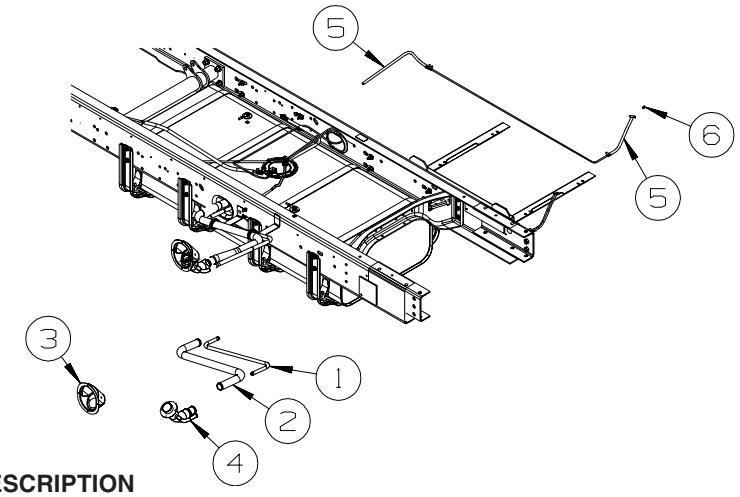

FORD

KEY	PART NUMBER	U/M	DESCRIPTION
1	129320-13-000	EA	PIPE - VENT - FILL - D29R
1	129320-06-000	EA	PIPE - VENT - FILL - D30B, D33T, D34A, D35N
2	129321-14-000	EA	TUBE - FUEL INLET - D29R
2	129321-06-000	EA	TUBE - FUEL INLET - D30B, D33T, D34A, D35N
3	128299-02-01A	EA	SHROUD - FUEL FILL
4	138884-02-000	EA	NECK - FUEL FILL - FORD
5	128139-03-000	FT	HOSE - FUEL - LOW PERMEABILITY - 1/4" DIAMETER
6	084884-01-000	EA	PLUG - BRASS - 3/8"

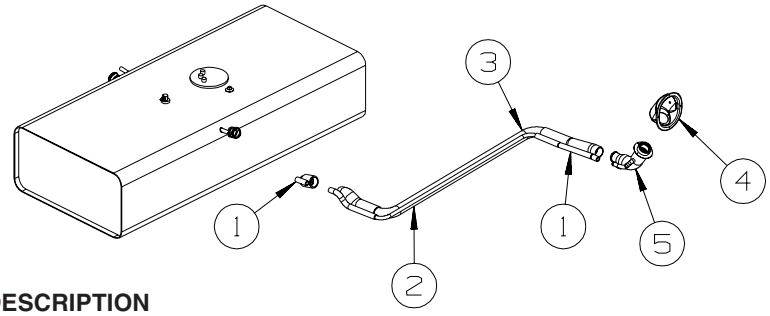

W - SERIES WORKHORSE

KEY	PART NUMBER	U/M	DESCRIPTION
1	128139-03-000	FT	HOSE - FUEL - LOW PERMEABILITY - 1/4" DIAMETER
2	128524-08-000	EA	PIPE - VENT - FUEL FILL - D26P
2	128524-04-000	EA	PIPE - VENT - FUEL FILL - D29R
2	128524-09-000	EA	PIPE - VENT - FUEL FILL - D30B - D33T
2	128524-06-000	EA	PIPE - VENT - FUEL FILL - D34A - D35N
3	124327-13-000	EA	TUBE - FUEL INLET - D26P
3	124327-08-000	EA	TUBE - FUEL INLET - D29R
3	124327-14-000	EA	TUBE - FUEL INLET - D30B - D33T
3	124327-11-000	EA	TUBE - FUEL INLET - D34A - D35N
4			CHASSIS SUPPLIED
5	127301-05-000	EA	NECK - FUEL FILL - UNLEADED

COPYRIGHT © 2007 WINNEBAGO INDUSTRIES INC.

CHASSIS GROUP (CONTINUED)
FUEL (CONTINUED)

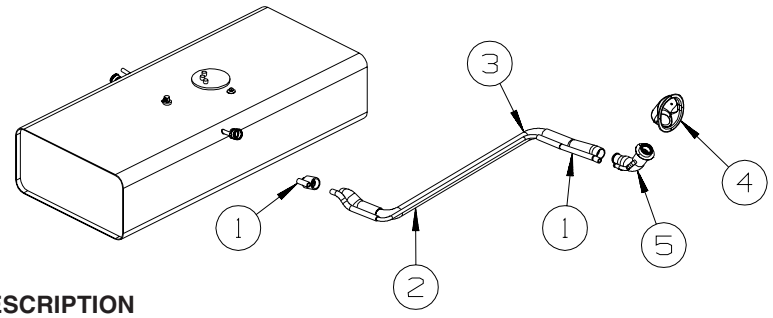

P32 WORKHORSE

KEY	PART NUMBER	U/M	DESCRIPTION
1	128139-02-000	FT	HOSE - FUEL - LOW PERMEABILITY - 5/8" DIAMETER
2	128524-01-000	EA	PIPE - VENT - FUEL FILL - D30B
2	128524-07-000	EA	PIPE - VENT - FUEL FILL - D29R
3	124327-04-000	EA	TUBE - FUEL INLET - D30B
3	124327-12-000	EA	TUBE - FUEL INLET - D29R
4			CHASSIS SUPPLIED
5	127301-05-000	EA	NECK - FUEL FILL - UNLEADED

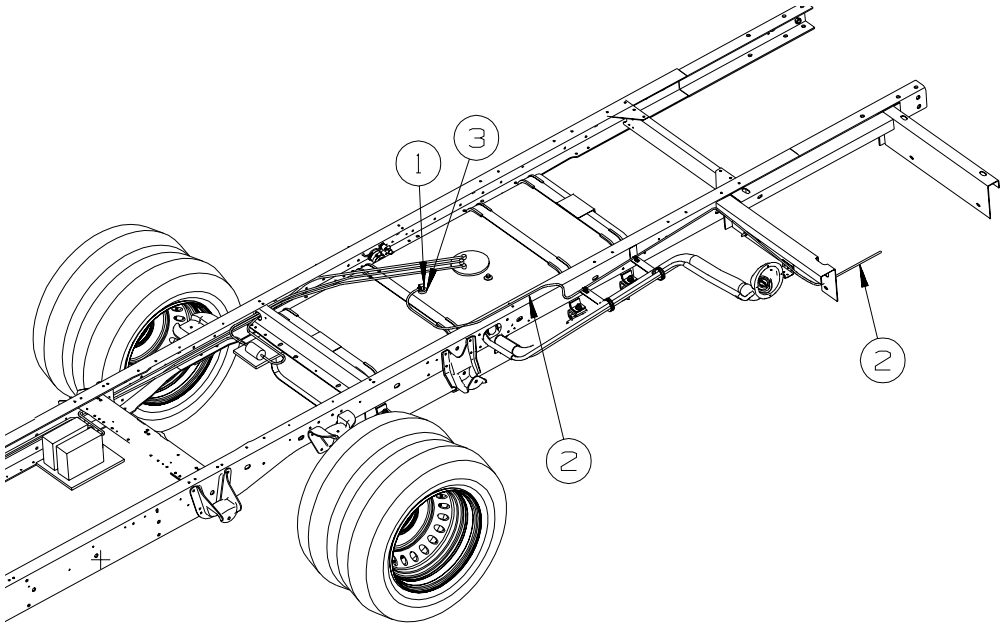

P32 WORKHORSE
D29R - D30B

KEY	PART NUMBER	U/M	DESCRIPTION
1	114254-01-000	EA	ADAPTER - 1/4"BARB X 1/8"MPT
2	128139-03-000	FT	HOSE - FUEL - LOW PERMEABILITY - 1/4" DIAMETER
3	068382-06-000	EA	BUSHING - 3/8"MPT X 1/8"FPT - BRASS

COPYRIGHT © 2007 WINNEBAGO INDUSTRIES INC.

CHASSIS GROUP (CONTINUED)
FUEL (CONTINUED)

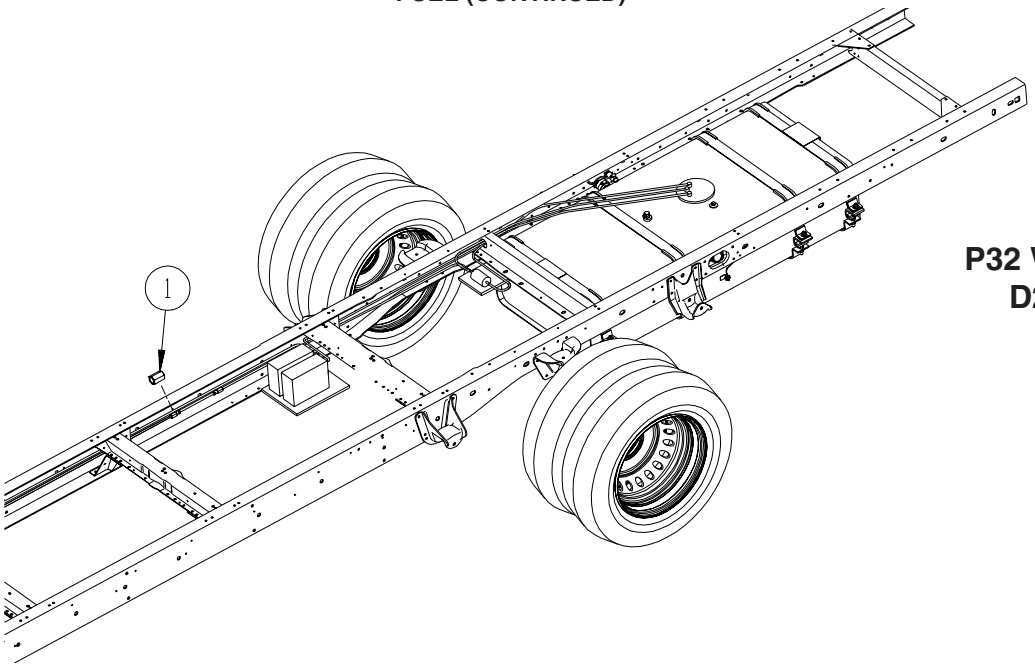

P32 WORKHORSE
D29R - D30B

KEY	PART NUMBER	U/M	DESCRIPTION
1	098779-02-000	EA	COUPLER - FUEL LINE - 1.2" LONG X .63" THREAD

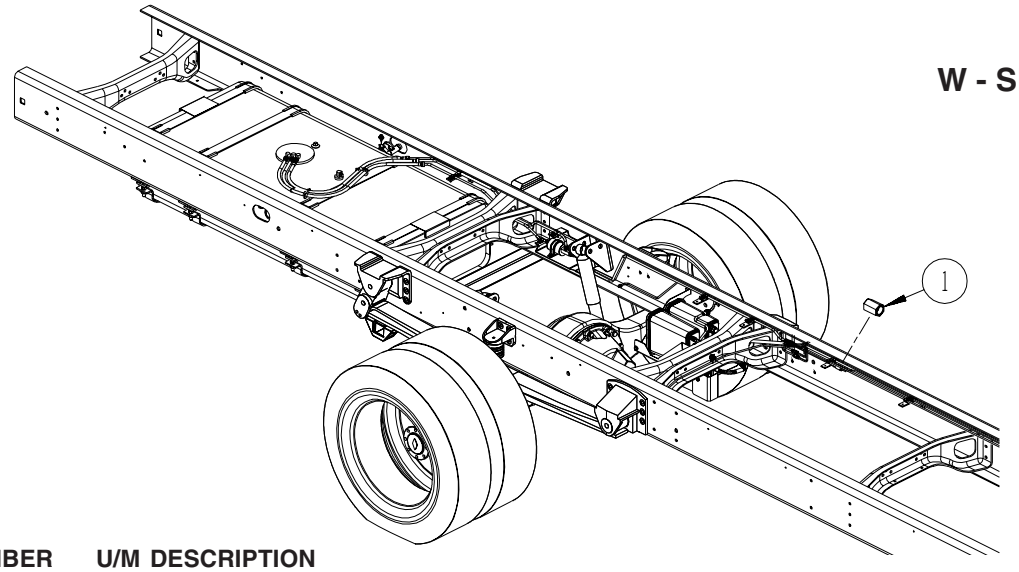

W - SERIES WORKHORSE

KEY	PART NUMBER	U/M	DESCRIPTION
1	098779-02-000	EA	COUPLER - FUEL LINE - 1.2" LONG X 16MM THREAD - STRETCHED CHASSIS ONLY

COPYRIGHT © 2007 WINNEBAGO INDUSTRIES INC.

CHASSIS GROUP (CONTINUED)

HYDRAULIC LEVELING

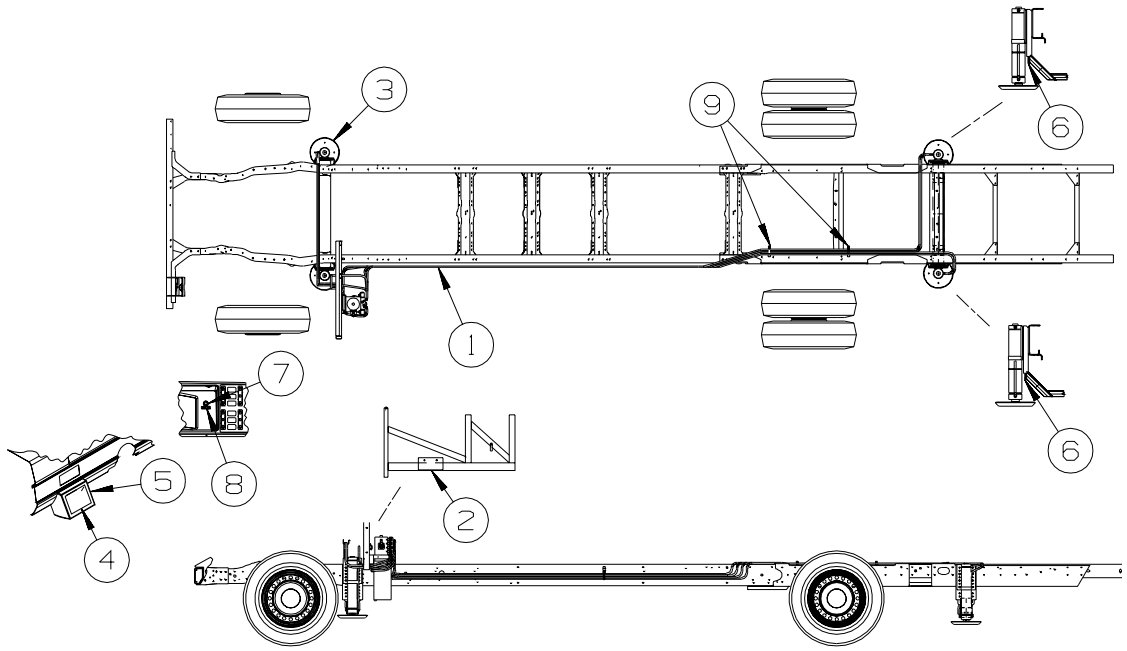

UP TO 05-31-05

KEY	PART NUMBER	U/M	DESCRIPTION
1	139644-03-000	EA	HOSE KIT - LEVELING JACKS
2	149803-01-02B	EA	BRACKET - PUMP/LEVELING
3	139641-04-000	EA	LEVELING SYSTEM - AUTO - (LEVEL BEST)-WORKHORSE P32-KWIKEE - D26P, D29R, D30B
3	139641-05-000	EA	LEVELING SYSTEM - AUTO - (LEVEL BEST) - FORD F53 - KWIKEE - D29R, D30B, D33T, D34A, D35N
3	139641-06-000	EA	LEVELING SYSTEM - AUTO - (LEVEL BEST)-WORKHORSE W22-KWIKEE - D34A, D35N
4	139643-03-000	EA	CONTROL - LEVEL - AUTO SYSTEM
5	139369-02-N21	EA	BEZEL - MONITOR - LEVELING
6	140083-01-000	EA	SPACER - JACK/CROSSMEMBER
7	133534-01-000	EA	LIGHT - RED INDICATOR WITH 1/4" TERMINALS
8	133533-01-01A	EA	LABEL - JACKS DOWN - CLEAR W/WHITE LETTERING
9	126624-01-02B	EA	ANGLE - WIRE SUPPORT - E-COAT

COPYRIGHT © 2007 WINNEBAGO INDUSTRIES INC.

CHASSIS GROUP (CONTINUED)

HYDRAULIC LEVELING (CONTINUED)

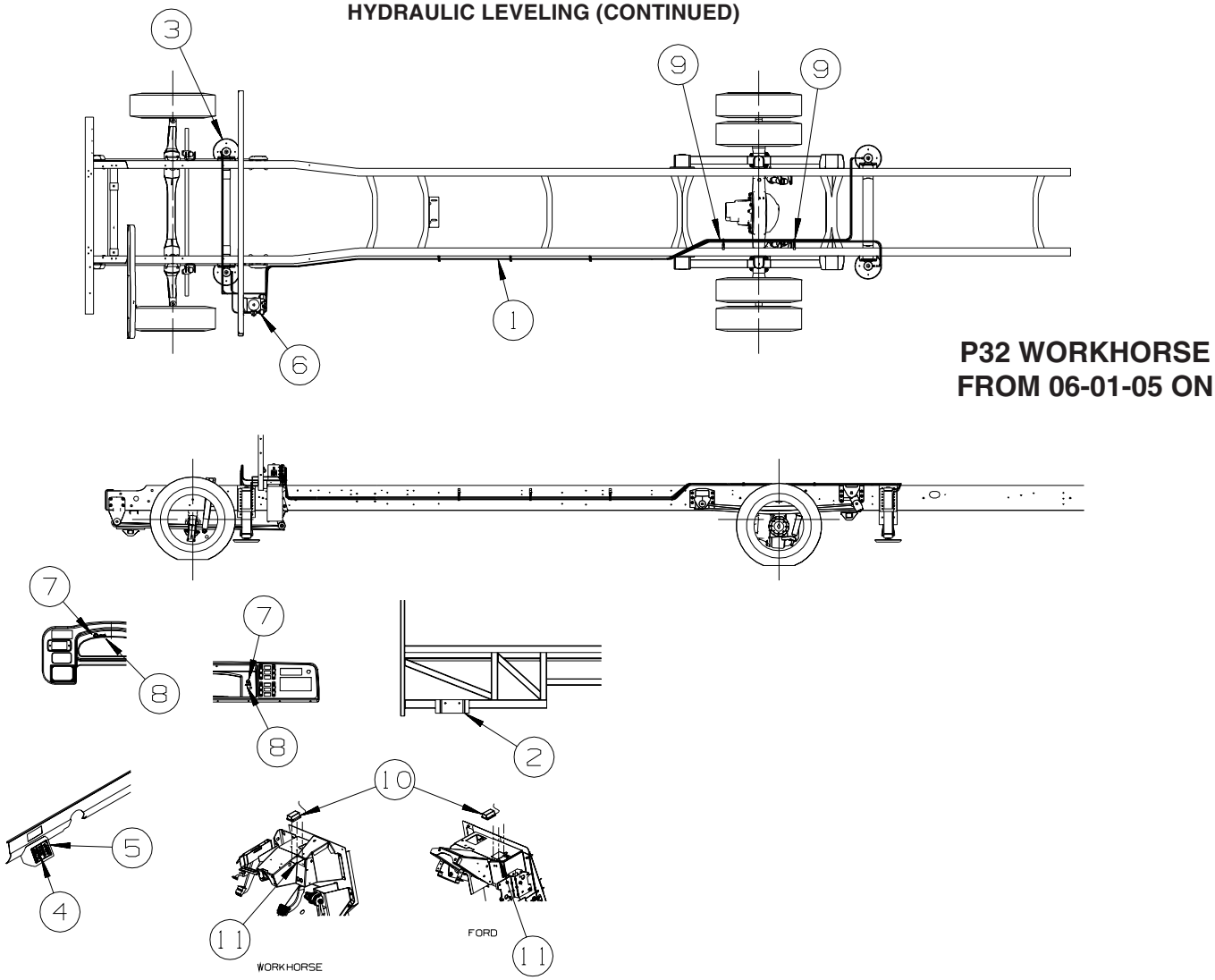

P32 WORKHORSE
FROM 06-01-05 ON

KEY	PART NUMBER	U/M	DESCRIPTION
1	139644-03-000	EA	HOSE KIT - LEVELING JACKS
2	149803-01-02B	EA	BRACKET - PUMP/LEVELING
3	139641-04-000	EA	LEVELING SYSTEM - AUTO - (LEVEL BEST)-WORKHORSE P32-KWIKEE - D29R, D30B
3	139641-05-000	EA	LEVELING SYSTEM - AUTO - (LEVEL BEST) - FORD F53 - KWIKEE - D29R, D30B, D33T, D34A, D35N
4	139643-03-000	EA	CONTROL - LEVEL - AUTO SYSTEM
5	139369-02-N21	EA	BEZEL - MONITOR - LEVELING
6	140083-01-000	EA	SPACER - JACK/CROSSMEMBER
7	133534-01-000	EA	LIGHT - RED INDICATOR WITH 1/4" TERMINALS
8	133533-01-01A	EA	LABEL - JACKS DOWN - CLEAR W/WHITE LETTERING
9	126624-01-02B	EA	ANGLE - WIRE SUPPORT - E-COAT

COPYRIGHT © 2007 WINNEBAGO INDUSTRIES INC.

CHASSIS GROUP (CONTINUED)

HYDRAULIC LEVELING (CONTINUED)

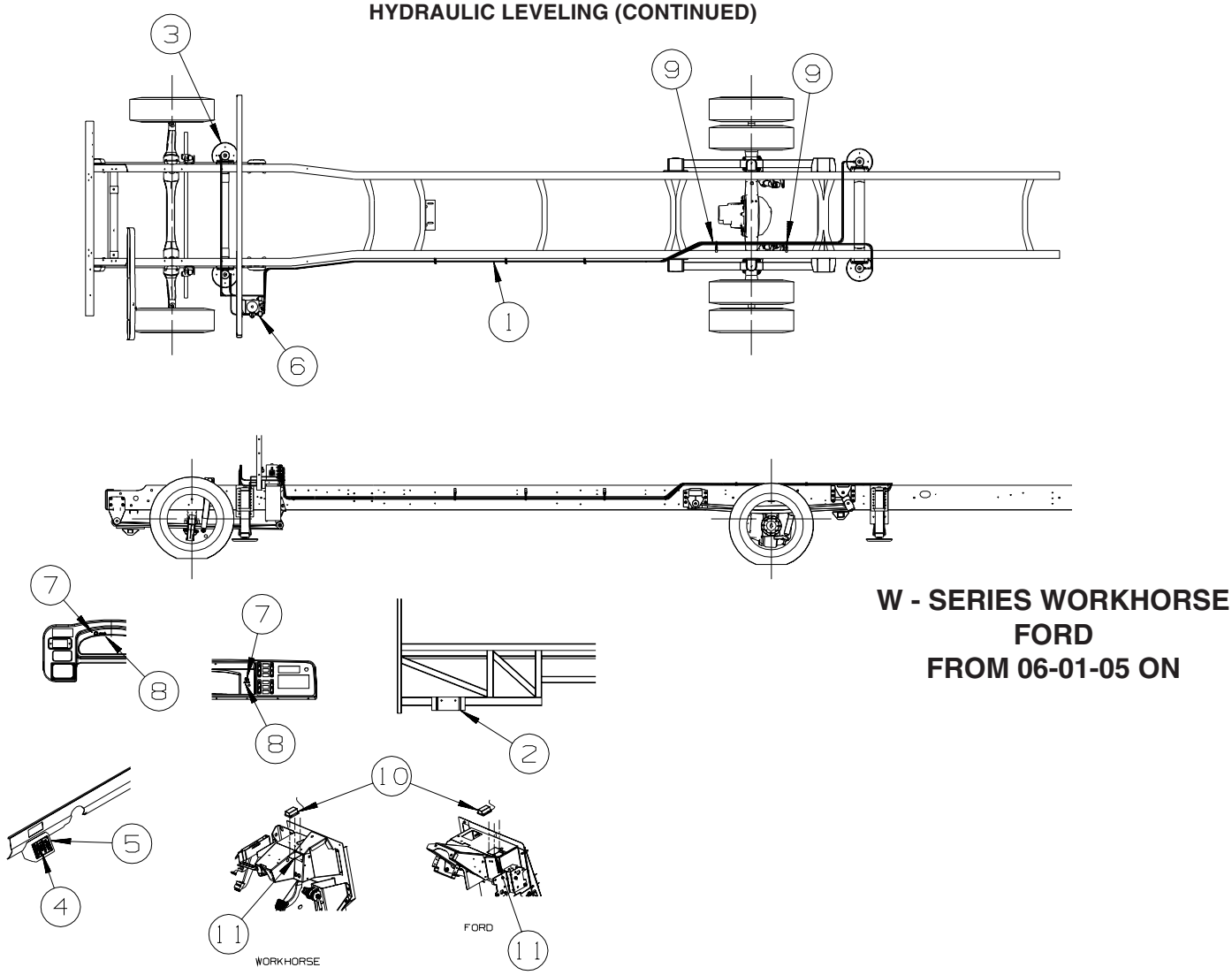

W - SERIES WORKHORSE
FORD
FROM 06-01-05 ON

KEY	PART NUMBER	U/M	DESCRIPTION
1	139644-03-000	EA	HOSE KIT - LEVELING JACKS
2	154816-01-02B	EA	BRACKET - PUMP/LEVELING - E-COATED
3	139641-07-000	EA	LEVELING SYSTEM - W/O PUMP - W/HARNESS - FORD F53-KWIKEE - D29R, D30B, D33T, D34A, D35N
3	139641-06-000	EA	LEVELING SYSTEM-AUTO-(LEVEL BEST)-WH W22-KWIKEE - D26P, D29R, D30B, D33T, D34A, D35N
4	139643-03-000	EA	CONTROL - LEVEL - AUTO SYSTEM
5	139369-02-N21	EA	BEZEL - MONITOR - LEVELING
6	156056-02-000	EA	PUMP - F/AUTOMATIC LEVELING SYSTEM
7	133534-01-000	EA	LIGHT - RED INDICATOR WITH 1/4" TERMINALS
8	133533-01-01A	EA	LABEL - JACKS DOWN - CLEAR W/WHITE LETTERING
9	126624-01-02B	EA	ANGLE - WIRE SUPPORT - E-COAT
10	156057-01-000	EA	SENSOR - F/AUTOMATIC LEVELING SYSTEM
11	153870-01-02B	EA	BRACKET - SENSOR/LEVEL - E-COATED - WORKHORSE
11	153870-02-02B	EA	BRACKET - SENSOR/LEVEL - E-COATED - FORD

COPYRIGHT © 2007 WINNEBAGO INDUSTRIES INC.

CHASSIS GROUP (CONTINUED)

SPARE TIRE

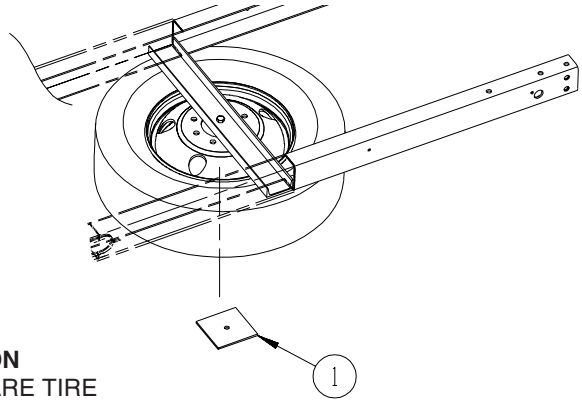

P32 WORKHORSE
D30B

KEY	PART NUMBER	U/M	DESCRIPTION
1	111685-01-000	EA	PLATE - SPARE TIRE
	064963-03-000	EA	WHEEL - STEEL - 6" X 19.5" - P32 WORKHORSE
	156482-01-000	EA	WHEEL-STEEL - 19.5 X 6,10B - W16, W18 WORKHORSE
	118814-05-000	EA	WHEEL - STEEL - 19.5" X 6.75" - W/STEM - GRAY - W20 WORKHORSE
	102340-08-000	EA	TIRE - 245/70R X 19.5F - GOODYEAR - FORD
	091673-07-000	EA	TIRE - 225/70R19.5 LRF - MICHELIN XRV - P32, W16 & W18 WORKHORSE
	102340-07-000	EA	TIRE - 245/70R X 19.5F - MICHELIN XRV - W20 WORKHORSE
	051377-01-000	EA	VALVE STEM
	051377-06-000	EA	VALVE STEM - .5" X 2 1/3" W/22 DEGREE BEND
	051377-07-000	EA	VALVE STEM

FORD
D30B, D33T, D34A, D35N
W - SERIES WORKHORSE
D30B, D33T, D35N

KEY	PART NUMBER	U/M	DESCRIPTION
	064963-03-000	EA	WHEEL - STEEL - 6" X 19.5" - WORKHORSE P32 (15,000/18,000)CHASSIS
	118814-05-000	EA	WHEEL - STEEL - 19.5" X 6.75" - W/STEM - GRAY - WORKHORSE W20 (20,700) CHASSIS
	102340-08-000	EA	TIRE - 245/70R X 19.5F - GOODYEAR - FORD
	091673-07-000	EA	TIRE - 225/70R19.5 LRF - MICHELIN XRV - WORKHORSE P32 (15,000/18,000)CHASSIS
	102340-07-000	EA	TIRE - 245/70R X 19.5F - MICHELIN XRV - WORKHORSE W20 (20,700) CHASSIS
	051377-01-000	EA	VALVE STEM
	051377-06-000	EA	VALVE STEM - .5" X 2 1/3" W/22 DEGREE BEND
	051377-07-000	EA	VALVE STEM

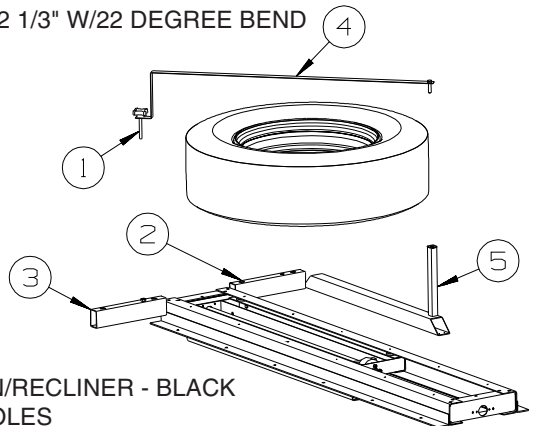

FORD/P32 WORKHORSE
D29R

W - SERIES
WORKHORSE
D26P, D29R, D34A

KEY	PART NUMBER	U/M	DESCRIPTION
1	134194-01-01A	EA	KNOB - HOLD DOWN/RECLINER - BLACK
2	148968-01-02B	EA	TUBE - STEEL, W/HOLES
3	148968-02-02B	EA	TUBE - STEEL, W/HOLES
4	148969-02-02B	EA	STRAP - SPARE TIRE - E-COATED
5	148982-01-02B	EA	BRACKET - SPARE TIRE - E-COATED
	064963-03-000	EA	WHEEL - STEEL - 6" X 19.5" - P32 WORKHORSE
	156482-01-000	EA	WHEEL-STEEL - 19.5 X 6,10B - W16, W18 WORKHORSE
	118814-05-000	EA	WHEEL - STEEL - 19.5" X 6.75" - W/STEM - GRAY - W20 WORKHORSE
	102340-08-000	EA	TIRE - 245/70R X 19.5F - GOODYEAR - FORD
	091673-07-000	EA	TIRE - 225/70R19.5 LRF - MICHELIN XRV - P32, W16 & W18 WORKHORSE
	102340-07-000	EA	TIRE - 245/70R X 19.5F - MICHELIN XRV - W20 WORKHORSE
	051377-01-000	EA	VALVE STEM
	051377-06-000	EA	VALVE STEM - .5" X 2 1/3" W/22 DEGREE BEND
	051377-07-000	EA	VALVE STEM

COPYRIGHT © 2007 WINNEBAGO INDUSTRIES INC.

CHASSIS GROUP (CONTINUED)
SUSPENSION

KEY	PART NUMBER	U/M	DESCRIPTION
*	122756-04-000	EA	SHOCK & STABILIZER KIT - WORKHORSE/WIDE BODY CHASSIS

***COMPONENT PARTS LISTED LATER IN THIS GROUP**

COMPONENT PARTS FOR SUSPENSION

122756-04-000

KEY	PART NUMBER	U/M	DESCRIPTION	VENDOR NO.
	122756-02-707	EA	DAMPNER - STEERING	T818SD
	122756-02-708	EA	BOOT - DAMPNER	T818SDB
	122756-02-709	EA	BUSHING PKG-STEERING DAMPNER	T818SDBSH
	122756-02-710	EA	BOLT PKG - STEERING DAMPNER	T818BSD
	122756-03-702	EA	SHOCK	557003
	122756-04-700	EA	BRACKET ASSEMBLY - DRIVER	T818L-WW
	122756-04-701	EA	BRACKET ASSEMBLY - PASSENGER	T818R-WW
	122756-04-702	EA	BOLT PACKAGE KIT	T818B-WW

COPYRIGHT © 2007 WINNEBAGO INDUSTRIES INC.

CHASSIS GROUP (CONTINUED)

WHEEL, TIRE, COVERS &/OR LINERS

KEY	PART NUMBER	U/M	DESCRIPTION
*	109443-08-000	EA	WHEEL COVER SET - '03 FORD F53 19.5" (1 SET = 4 COVERS) - FORD
*	109443-06-000	EA	WHEEL COVER SET - GM/WH 19.5" W/LONG STUDS - P32 WORKHORSE
*	154672-01-000	EA	LINER - WHEEL - SET/4 - 19.5 - 10 BOLT - FORD
*	110435-20-000	EA	LINER - WHEEL - SET/4 - 19.5 - 8 BOLT - W/METRIC JAMB NUTS - P32 WORKHORSE FROM: 00-00-00 THRU: 01-30-05
*	154672-01-000	EA	LINER - WHEEL - SET/4 - 19.5 - 10 BOLT - P32 WORKHORSE FROM: 01-31-05 THRU: 99-99-99
	145580-06-000	EA	LINER - WHEEL(SET OF 4) - 19.5"/10 BOLT - W16 & W18 WORKHORSE
	064963-03-000	EA	WHEEL - STEEL - 6" X 19.5" - P32 WORKHORSE
	156482-01-000	EA	WHEEL-STEEL - 19.5 X 6,10B - W16, W18 WORKHORSE
	118814-05-000	EA	WHEEL - STEEL - 19.5" X 6.75" - W/STEM - GRAY - W20 WORKHORSE
	102340-08-000	EA	TIRE - 245/70R X 19.5F - GOODYEAR - FORD
	091673-07-000	EA	TIRE - 225/70R19.5 LRF - MICHELIN XRV - P32, W16 & W18 WORKHORSE
	102340-07-000	EA	TIRE - 245/70R X 19.5F - MICHELIN XRV - W20 WORKHORSE
	051377-01-000	EA	VALVE STEM
	051377-06-000	EA	VALVE STEM - .5" X 2 1/3" W/22 DEGREE BEND
	077030-01-000	EA	EXTENSION - VALVE STEM - 1.25" - METAL
	077030-10-000	EA	EXTENSION - VALVE STEM - .50" - METAL
	095012-09-000	EA	EXTENSION/VALVE STEM - LIVE - 7.7" FROM: 00-00-00 THRU: 03-09-05
	095012-10-000	EA	EXTENSION/VALVE STEM - LIVE - 8.5" FROM: 03-10-05 THRU: 99-99-99
	095012-07-000	EA	STABILIZER/VALVE EXTENSION - LIVE - 4"
	080208-02-000	EA	BAR/LEVERAGE - LUG WRENCH - 13/16" DIA. - P32, W16, W18 WORKHORSE
	080208-05-000	EA	BAR/LEVERAGE - LUG WRENCH - .75" DIA. - W20 WORKHORSE
	080208-06-000	EA	LUG WRENCH - 1"/1.1" SOCKETS X 16.4" LONG - P32, W16, W18 WORKHORSE
	080208-04-000	EA	LUG WRENCH - 1.2"/1.3" SOCKETS X 13.8" LONG - W20 WORKHORSE

***COMPONENT PARTS LISTED LATER IN THIS GROUP**

COMPONENT PARTS FOR WHEEL, TIRE, COVERS &/OR LINERS

109443-06-000

KEY	PART NUMBER	U/M	DESCRIPTION	VENDOR NO.
	109443-01-700	EA	COVER-WHEEL 19.5 FRT/RR EA=1	SHAG95
	109443-01-701	EA	BRACKET-RET FRT 1EA=1 SET	SHAG95-FBS
	109443-01-703	EA	CAP-CENTER, HUB - DICOR	SHAU95-CAP
	109443-01-704	EA	CLIP-RETAINER	V160GM-PNT
	109443-06-701	EA	BRACKET-RET RR 1EA=1 SET	SHG795-RBS

109443-08-000

KEY	PART NUMBER	U/M	DESCRIPTION	VENDOR NO.
	109443-01-703	EA	CAP-CENTER, HUB - DICOR	SHAU95-CAP
	109443-07-700	EA	COVER/WHEEL-FRONT/REAR 8 LUG	SHAF95-COV
	109443-08-700	EA	BRACKET-RET FRT 1EA=1 SET	SHAF95M-FBS
	109443-08-701	EA	BRACKET-RET RR 1EA=1 SET	SHAF95M-RBS

110435-20-000

KEY	PART NUMBER	U/M	DESCRIPTION	VENDOR NO.
	110435-04-705	EA	DECAL-CTR HUB 2 3/4" DIAMOND	
	110435-10-705	EA	TOOL/JAMB NUT INSTALLATION	V195P7-TOL
	110435-15-700	EA	LINER - WHEEL - FRONT	V195F9-FWC
	110435-15-701	EA	LINER - WHEEL - REAR	V195F9-RWC
	110435-15-702	EA	JAMB NUT W/COVER - CRS THRD	V195F9-EJN
	110435-20-700	EA	LNC W/ENCL M14X1.5 JAM NUT	V195F9-EJN-MF

154672-01-000

KEY	PART NUMBER	U/M	DESCRIPTION	VENDOR NO.
	154672-01-700	EA	LINER - WHEEL - FRONT	V195F6-FWC
	154672-01-701	EA	LINER - WHEEL - REAR	V195F6-RWC

COPYRIGHT © 2007 WINNEBAGO INDUSTRIES INC.

CHASSIS GROUP (CONTINUED)

WHEEL, TIRE, COVERS &/OR LINERS (CONTINUED)

154672-01-000

KEY	PART NUMBER	U/M	DESCRIPTION	VENDOR NO.
	154672-01-700	EA	LINER - WHEEL - FRONT	V195F6-FWC
	154672-01-701	EA	LINER - WHEEL - REAR	V195F6-RWC

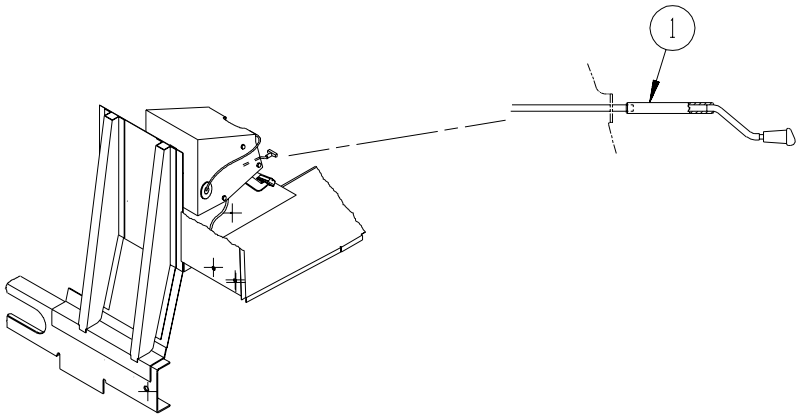

BRAKE

KEY	PART NUMBER	U/M	DESCRIPTION
1	113007-01-000	EA	PIN - SPRING - .375 X 3"

COPYRIGHT © 2007 WINNEBAGO INDUSTRIES INC.

CURTAIN & CUSHION GROUP

NOTICE

IN ORDER TO ASSIST OUR PARTS SALES DEPT. IN PROVIDING INTERIOR SOFTWARE ITEMS, PLEASE INCLUDE THE SERIAL NUMBER AND THE COLOR CODE NUMBER FROM THE VEHICLE CERTIFICATION LABEL WHEN ORDERING. THIS LABEL IS LOCATED ON THE LEFT SIDEWALL AT THE END OF THE DASH (A-BODY),OR ON THE DRIVER'S DOOR LATCH PLATE (C-BODY).

AN EXAMPLE OF A COLOR CODE NUMBER IS B07, WHICH DESIGNATES AN OVERALL COLOR SCHEME OF A PARTICULAR UNIT. THE COLOR LISTED AFTER THE ITEM DESCRIPTION ON THE MICROFICHE, INDICATES THE OVERALL UNIT COLOR. ORDER THE ITEM YOU DESIRE ACCORDING TO UNIT COLOR CODE. IF ALL COLORS USE THE SAME ITEM NO COLOR CODE WILL BE NOTED.

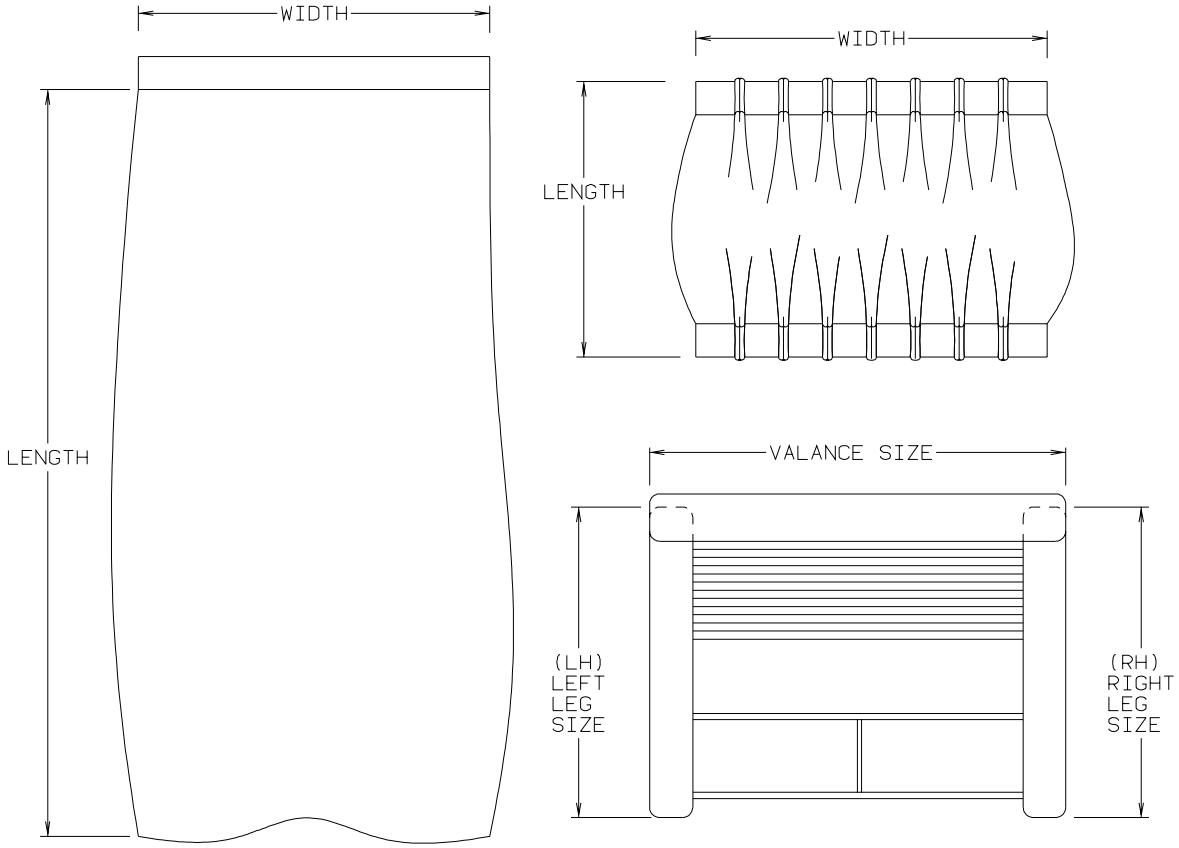

NOTE: USE THIS ILLUSTRATION WHEN DETERMINING LENGTH AND WIDTH MEASUREMENTS FOR CURTAINS. YOU WILL NOTE THE WIDTH MEASUREMENT IS TAKEN ON THE TOP OF THE CURTAIN WITH THE CURTAIN FULLY EXTENDED. THE LENGTH MEASUREMENT IS TAKEN FROM TOP TO BOTTOM. LEFT AND RIGHT WINDOW LEGS ARE DETERMINED WHEN FACING THE WINDOW.

COPYRIGHT © 2007 WINNEBAGO INDUSTRIES INC.

CURTAIN & CUSHION GROUP (CONTINUED)

CUSHION LAYOUT

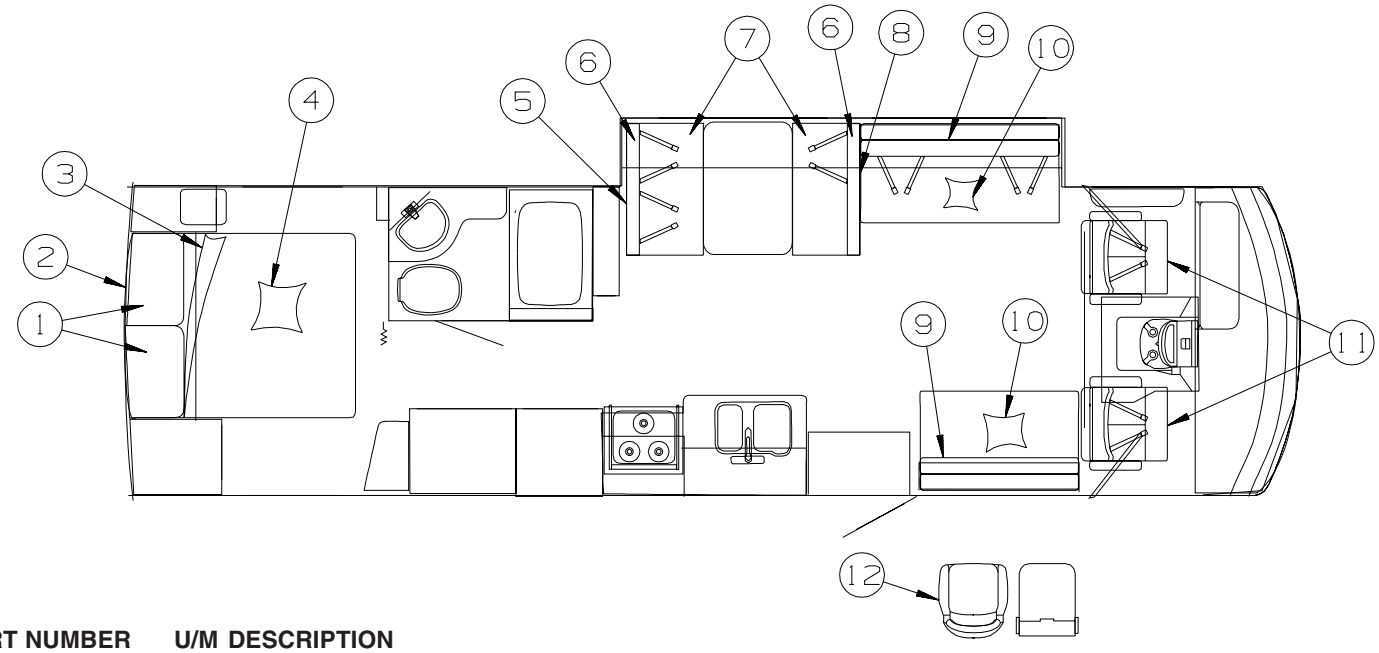

KEY	PART NUMBER	U/M	DESCRIPTION
1	104176-09-T53	EA	PILLOW SHAM - 30" (T53, TL0)
1	104176-09-T12	EA	PILLOW SHAM - 30" (T54, TL1)
1	104176-04-S30	EA	PILLOW SHAM - 30" (T55, TL2)
2	149184-01-T53	EA	HEADBOARD - TONYA - 60" (T53, TL0)
2	149184-01-T54	EA	HEADBOARD - TONYA - 60" (T54, TL1)
2	149184-01-S30	EA	HEADBOARD - TONYA - 60" (T55, TL2)
3	132336-06-T53	EA	BEDSPREAD/CAP - 60" X 75" (T53, TL0)
3	132336-06-T54	EA	BEDSPREAD/CAP - 60" X 75" (T54, TL1)
3	132336-06-S30	EA	BEDSPREAD/CAP - 60" X 75" (T55, TL2)
4	149228-02-T53	EA	PILLOW - TONYA - 18" (WELTED) (T53, TL0)
4	149228-04-T54	EA	PILLOW - TONYA - 18" (BRAIDED) (T54, TL1)
4	149228-02-S30	EA	PILLOW - TONYA - 18" (WELTED) (T55, TL2)
5	153519-08-T53	EA	PAD - TOP/LH - F/DINETTE BACK - W/TAB - FABRIC COVERED (T53, TL0)
5	153519-08-T54	EA	PAD - TOP/LH - F/DINETTE BACK - W/TAB - FABRIC COVERED (T54, TL1)
5	153519-08-T55	EA	PAD - TOP/LH - F/DINETTE BACK - W/TAB - FABRIC COVERED (T55, TL2)
6	153672-01-T53	EA	CUSHION - SEAT BACK - 13.5" X 42" X 5" (T53, TL0)
6	153672-01-T54	EA	CUSHION - SEAT BACK - 13.5" X 42" X 5" (T54, TL1)
6	153672-01-T55	EA	CUSHION - SEAT BACK - 13.5" X 42" X 5" (T55, TL2)
	P53672-01-T53	EA	COVER/BACK - 13.5" X 42" X 5" (T53, TL0)
	P53672-01-T54	EA	COVER/BACK - 13.5" X 42" X 5" (T54, TL1)
	P53672-01-T55	EA	COVER/BACK - 13.5" X 42" X 5" (T55, TL2)
7	153671-04-T53	EA	CUSHION - SEAT - 21" X 42" X 5" (T53, TL0)
7	153671-01-T54	EA	CUSHION - SEAT - 21" X 42" X 5" (T54, TL1)
7	153671-01-T55	EA	CUSHION - SEAT - 21" X 42" X 5" (T55, TL2)
	P53671-04-T53	EA	COVER/SEAT - 21" X 42" X 5" (T53, TL0)
	P53671-01-T54	EA	COVER/SEAT - 21" X 42" X 5" (T54, TL1)
	P53671-01-T55	EA	COVER/SEAT - 21" X 42" X 5" (T55, TL2)
8	153519-07-T53	EA	PAD - TOP/RH - F/DINETTE BACK - W/TAB - FABRIC COVERED (T53, TL0)
8	153519-07-T54	EA	PAD - TOP/RH - F/DINETTE BACK - W/TAB - FABRIC COVERED (T54, TL1)
8	153519-07-T55	EA	PAD - TOP/RH - F/DINETTE BACK - W/TAB - FABRIC COVERED (T55, TL2)
9			SEE SOFA AREA
10	149228-01-T53	EA	PILLOW - TONYA - 18" (BRAIDED) (T53, TL0)
10	149228-01-T54	EA	PILLOW - TONYA - 18" (BRAIDED) (T54, TL1)
10	149228-01-S30	EA	PILLOW - TONYA - 18" (BRAIDED) (T55, TL2)
11	135473-25-T53	EA	BUCKET SEAT - DRIVER/PASSENGER (T53, TL0)
11	135473-25-T54	EA	BUCKET SEAT - DRIVER/PASSENGER (T54, TL1)
11	135473-25-T55	EA	BUCKET SEAT - DRIVER/PASSENGER (T55, TL2)
11	135473-26-T53	EA	BUCKET SEAT - DRIVER/PASSENGER - LEATHER (T53, T55, TL0, TL2) - LEATHER
11	135473-26-T54	EA	BUCKET SEAT - DR/PS (T54, TL1) - LEATHER
12	138523-03-T53	EA	CHAIR - GLIDER - W/SWIVEL HOOP (T53, TL0)
12	138523-03-T54	EA	CHAIR - GLIDER - W/SWIVEL HOOP (T54, TL1)
12	138523-03-T55	EA	CHAIR - GLIDER - W/SWIVEL HOOP (T55, TL2)

COPYRIGHT © 2007 WINNEBAGO INDUSTRIES INC.

CURTAIN & CUSHION GROUP (CONTINUED)

BUCKET SEATS

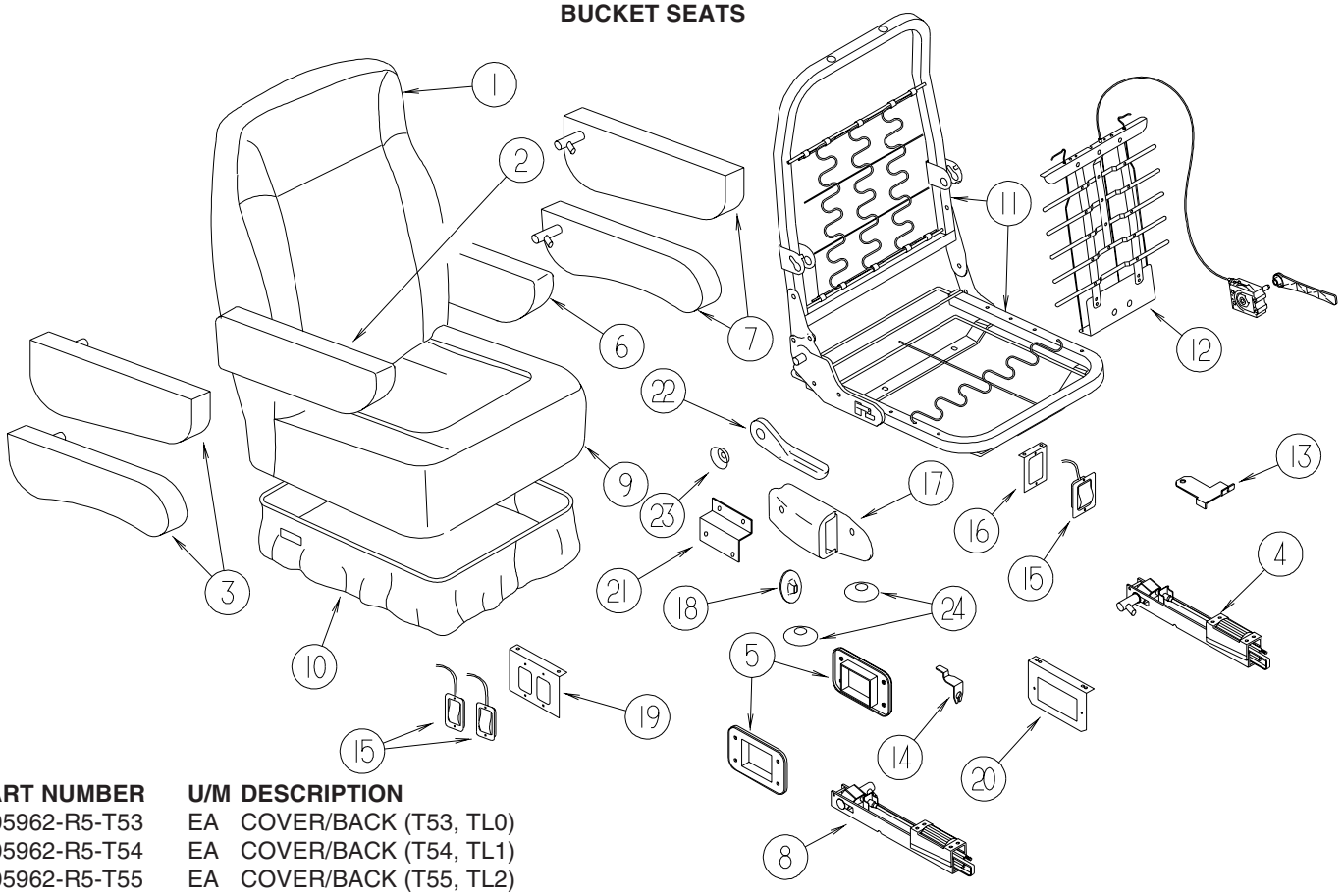

KEY	PART NUMBER	U/M	DESCRIPTION
1	M05962-R5-T53	EA	COVER/BACK (T53, TL0)
1	M05962-R5-T54	EA	COVER/BACK (T54, TL1)
1	M05962-R5-T55	EA	COVER/BACK (T55, TL2)
1	M05962-B5-TT0	EA	COVER/BACK (TT0, TT1)
1	M05962-V1-TT2	EA	COVER/BACK (TT2, TT3)
1	M05962-B5-SY7	EA	COVER/BACK (TT4, TT5)
1	M05962-V1-TT6	EA	COVER/BACK (TT6, TT7)
1	M05962-B5-TT8	EA	COVER/BACK (TT8, TT9)
1	M05962-B5-TU0	EA	COVER/BACK (TU0, TU1)
1	M05962-B5-TU2	EA	COVER/BACK (TU2, TU3)
1	M05962-S0-T53	EA	COVER/BACK (T53, T55, TL0, TL2) - LEATHER
1	M05962-S0-T54	EA	COVER/BACK (T54, TL1, TT0, TT1, TT2, TT3, TT4, TT5, TT6, TT7, TT8, TT9) - LEATHER
2	148652-07-T53	EA	ARMREST - RIGHT (T53, TL0)
2	148652-07-T54	EA	ARMREST - RIGHT (T54, TL1)
2	148652-07-T55	EA	ARMREST - RIGHT (T55, TL2)
2	129666-07-R34	EA	ARMREST - RIGHT HAND (TT0, TT1)
2	129666-21-TT2	EA	ARMREST - RIGHT HAND (TT2, TT3)
2	129666-07-TT4	EA	ARMREST - RIGHT HAND (TT4, TT5)
2	129666-21-TT6	EA	ARMREST - RIGHT HAND (TT6, TT7)
2	129666-07-R13	EA	ARMREST - RIGHT HAND (TT8, TT9)
2	129666-07-TU0	EA	ARMREST - RIGHT HAND (TU0, TU1)
2	129666-07-TU2	EA	ARMREST - RIGHT HAND (TU2, TU3)
2	148652-03-S46	EA	ARMREST - RIGHT - LEATHER (T53, T55, TL0, TL2) - LEATHER
2	148652-03-S52	EA	ARMREST - RIGHT (T54, TL1, TT0, TT1, TT2, TT3, TT4, TT5, TT6, TT7, TT8, TT9) - LEATHER
	P48652-07-T53	EA	COVER/ARMREST - RIGHT (T53, TL0)
	P48652-07-T54	EA	COVER/ARMREST - RIGHT (T54, TL1)
	P48652-07-T55	EA	COVER/ARMREST - RIGHT (T55, TL2)
	P29666-07-R34	EA	COVER/ARMREST - RIGHT HAND (TT0, TT1)
	P29666-21-TT2	EA	COVER/ARMREST - RIGHT HAND (TT2, TT3)
	P29666-07-SY7	EA	COVER/ARMREST - RIGHT HAND (TT4, TT5)
	P29666-21-TT6	EA	COVER/ARMREST - RIGHT HAND (TT6, TT7)
	P29666-07-R13	EA	COVER/ARMREST - RIGHT HAND (TT8, TT9)
	P29666-07-TU0	EA	COVER/ARMREST - RIGHT HAND (TU0, TU1)
	P29666-07-TU2	EA	COVER/ARMREST - RIGHT HAND (TU2, TU3)
	P48652-03-S46	EA	COVER/ARMREST - RIGHT - LEATHER (T53, T55, TL0, TL2) - LEATHER
	P48652-03-S52	EA	COVER/ARMREST - RT (T54, TL1, TT0, TT1, TT2, TT3, TT4, TT5, TT6, TT7, TT8, TT9) - LEATHER
3	130698-03-000	EA	ARMREST/MOLDED - RIGHT - W/O COVER (T53, T54, T55, TL0, TL1, TL2)
3	130698-01-000	EA	ARMREST-RT- W/O COVER (TT0, TT1, TT2, TT3, TT4, TT5, TT6, TT7, TT8, TT9, TU0, TU1, TU2, TU3)

COPYRIGHT © 2007 WINNEBAGO INDUSTRIES INC.

CURTAIN & CUSHION GROUP (CONTINUED)

BUCKET SEATS (CONTINUED)

KEY	PART NUMBER	U/M	DESCRIPTION
4	NOT USED		
5	NOT USED		
6	148652-08-T53	EA	ARMREST - LEFT (T53, TL0)
6	148652-08-T54	EA	ARMREST - LEFT (T54, TL1)
6	148652-08-T55	EA	ARMREST - LEFT (T55, TL2)
6	129666-08-R34	EA	ARMREST - LEFT HAND (TT0, TT1)
6	129666-22-TT2	EA	ARMREST - LEFT HAND (TT2, TT3)
6	129666-08-TT4	EA	ARMREST - LEFT HAND (TT4, TT5)
6	129666-22-TT6	EA	ARMREST - LEFT HAND (TT6, TT7)
6	129666-08-R13	EA	ARMREST - LEFT HAND (TT8, TT9)
6	129666-08-TU0	EA	ARMREST - LEFT HAND (TU0, TU1)
6	129666-08-TU2	EA	ARMREST - LEFT HAND (TU2, TU3)
6	148652-04-S46	EA	ARMREST - LEFT - LEATHER (T53, T55, TL0, TL2) - LEATHER
6	148652-04-S52	EA	ARMREST - LEFT (T54, TL1, TT0, TT1, TT2, TT3, TT4, TT5, TT6, TT7, TT8, TT9) - LEATHER
	P48652-08-T53	EA	COVER/ARMREST - LEFT (T53, TL0)
	P48652-08-T54	EA	COVER/ARMREST - LEFT (T54, TL1)
	P48652-08-T55	EA	COVER/ARMREST - LEFT (T55, TL2)
	P29666-08-R34	EA	COVER/ARMREST - LEFT HAND (TT0, TT1)
	P29666-22-TT2	EA	COVER/ARMREST - LEFT HAND (TT2, TT3)
	P29666-08-SY7	EA	COVER/ARMREST - LEFT HAND (TT4, TT5)
	P29666-22-TT6	EA	COVER/ARMREST - LEFT HAND (TT6, TT7)
	P29666-08-R13	EA	COVER/ARMREST - LEFT HAND (TT8, TT9)
	P29666-08-TU0	EA	COVER/ARMREST - LEFT HAND (TU0, TU1)
	P29666-08-TU2	EA	COVER/ARMREST - LEFT HAND (TU2, TU3)
	P48652-04-S46	EA	COVER/ARMREST - LEFT - LEATHER (T53, T55, TL0, TL2) - LEATHER
	P48652-04-S52	EA	COVER/ARMREST - LT (T54, TL1, TT0, TT1, TT2, TT3, TT4, TT5, TT6, TT7, TT8, TT9) - LEATHER
7	130698-04-000	EA	ARMREST/MOLDED - LEFT - W/O COVER (T53, T54, T55, TL0, TL1, TL2)
7	130698-02-000	EA	ARMREST-LT- W/O COVER (TT0, TT1, TT2, TT3, TT4, TT5, TT6, TT7, TT8, TT9, TU0, TU1, TU2, TU3)
8	NOT USED		
9	M05962-R6-T53	EA	COVER/SEAT (T53, TL0)
9	M05962-R6-T54	EA	COVER/SEAT (T54, TL1)
9	M05962-R6-T55	EA	COVER/SEAT (T55, TL2)
9	M05962-B6-TT0	EA	COVER/SEAT (TT0, TT1)
9	M05962-V2-TT2	EA	COVER/SEAT (TT2, TT3)
9	M05962-B6-SY7	EA	COVER/SEAT (TT4, TT5)
9	M05962-V2-TT6	EA	COVER/SEAT (TT6, TT7)
9	M05962-B6-TT8	EA	COVER/SEAT (TT8, TT9)
9	M05962-B6-TU0	EA	COVER/SEAT (TU0, TU1)
9	M05962-B6-TU2	EA	COVER/SEAT (TU2, TU3)
9	M05962-S1-T53	EA	COVER/SEAT (T53, T55, TL0, TL2) - LEATHER
9	M05962-S1-T54	EA	COVER/SEAT (T54, TL1, TT0, TT1, TT2, TT3, TT4, TT5, TT6, TT7, TT8, TT9) - LEATHER
10	148630-14-T53	EA	SKIRT - W/SEAT BELT SLOT (T53, TL0)
10	148630-14-T54	EA	SKIRT - W/SEAT BELT SLOT (T54, TL1)
10	148630-14-T55	EA	SKIRT - W/SEAT BELT SLOT (T55, TL2)
10	148630-01-S52	EA	SKIRT - W/SEAT BELT SLOT (TT0, TT1)
10	148630-20-TT2	EA	SKIRT - W/SEAT BELT SLOT (TT2, TT3)
10	148630-01-SY7	EA	SKIRT - W/SEAT BELT SLOT (TT4, TT5)
10	148630-20-TT6	EA	SKIRT - W/SEAT BELT SLOT (TT6, TT7)
10	148630-01-R42	EA	SKIRT - W/SEAT BELT SLOT (TT8, TT9)
10	148630-01-TU0	EA	SKIRT - W/SEAT BELT SLOT (TU0, TU1)
10	148630-01-TU2	EA	SKIRT - W/SEAT BELT SLOT (TU2, TU3)
10	148630-02-S72	EA	SKIRT - W/SEAT BELT SLOT - LEATHER (T53, T55, TL0, TL2) - LEATHER
10	148630-02-SA0	EA	SKIRT - W/BELT SLOT (T54, TL1, TT0, TT1, TT2, TT3, TT4, TT5, TT6, TT7, TT8, TT9) - LEATHER
11	134532-01-000	EA	FRAME - SEAT/HIGH BACK
12	NOT USED		
13	117125-01-02B	EA	BRACKET - CABLE MOUNT - ADJUSTER W/LOCK
14	108049-02-000	EA	CLIP - CABLE/PEDESTAL
15	108049-04-000	EA	CABLE - W/MINI LEVER ACTION SWITCH - 28" SHEATH/30" CABLE
16	NOT USED		
17	NOT USED		
18	NOT USED		

COPYRIGHT © 2007 WINNEBAGO INDUSTRIES INC.

CURTAIN & CUSHION GROUP (CONTINUED)

BUCKET SEATS (CONTINUED)

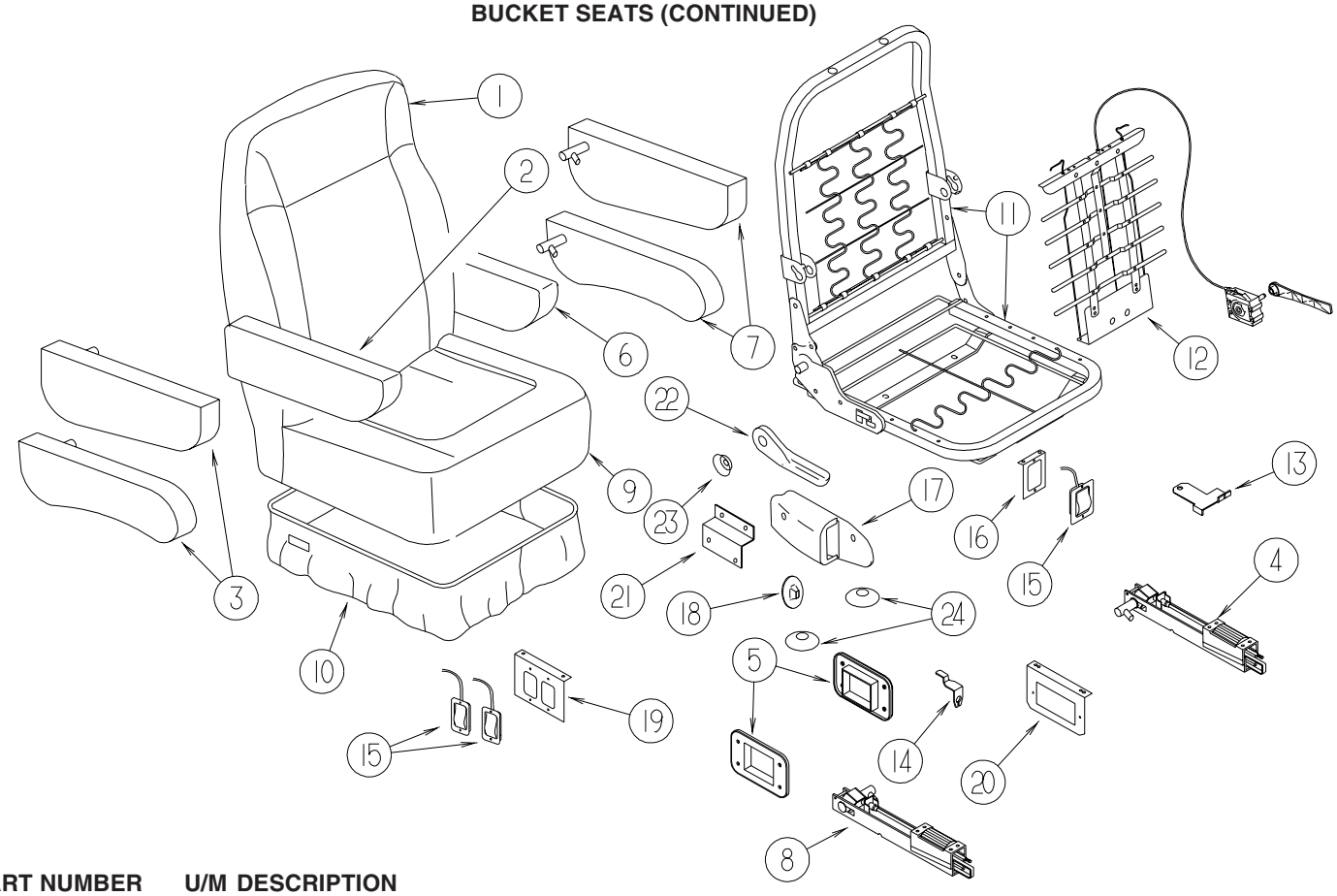

KEY	PART NUMBER	U/M	DESCRIPTION
19	127159-02-02B	EA	BRACKET - SEAT RELEASE - DUAL REMOTE - E-COATED
20	NOT USED		
21	NOT USED		
22	130802-02-000	EA	LEVER - RIGHT HAND
	130802-03-000	EA	SCREW F/LEVER
23	148668-01-01A	EA	CUP/TRIM COVER - F/LEVER - BLACK (T53, T54, T55, TL0, TL1, TL2)
24	NOT USED		
	152337-01-000	EA	PROTECTOR - SEAT - CLEAR VINYL

COPYRIGHT © 2007 WINNEBAGO INDUSTRIES INC.

CURTAIN & CUSHION GROUP (CONTINUED)

LOUNGE CHAIR

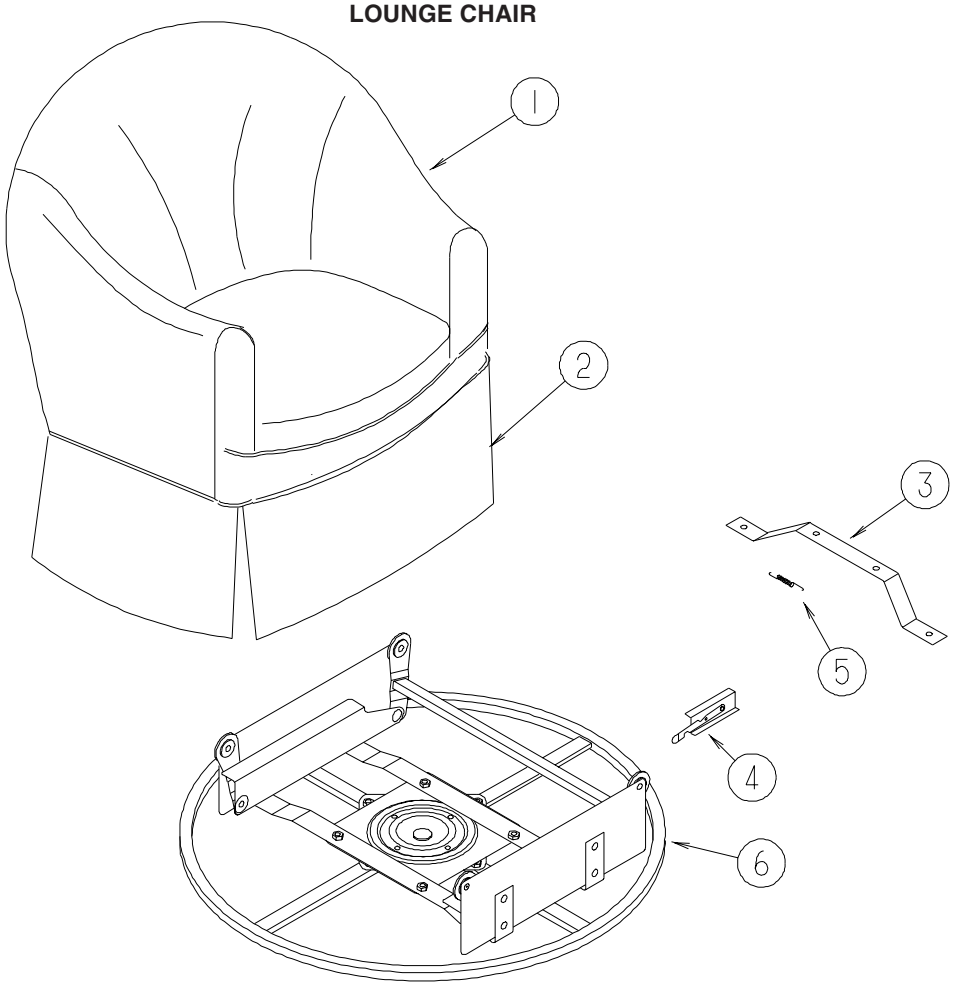

KEY	PART NUMBER	U/M	DESCRIPTION
1	P38523-02-T53	EA	COVER - CHAIR (T53, TL0)
1	P38523-02-T54	EA	COVER - CHAIR (T54, TL1)
1	P38523-02-T55	EA	COVER - CHAIR (T55, TL2)
1	P38523-01-TT0	EA	COVER - CHAIR/GLIDER (TT0, TT1)
1	P38523-03-TT2	EA	COVER - CHAIR (TT2, TT3)
1	P38523-01-SX0	EA	COVER - CHAIR/GLIDER (TT4, TT5)
1	P38523-03-TT6	EA	COVER - CHAIR (TT6, TT7)
1	P38523-01-R13	EA	COVER - CHAIR/GLIDER (TT8, TT9)
1	P38523-01-R11	EA	COVER - CHAIR/GLIDER (TU0, TU1)
1	P38523-01-TU2	EA	COVER - CHAIR/GLIDER (TU2, TU3)
2	139083-02-T53	EA	SKIRT - F/GLIDER CHAIR (T53, TL0)
2	139083-02-T54	EA	SKIRT - F/GLIDER CHAIR (T54, TL1)
2	139083-02-T55	EA	SKIRT - F/GLIDER CHAIR (T55, TL2)
2	139083-01-TT0	EA	SKIRT - F/GLIDER CHAIR (TT0, TT1)
2	139083-03-TT2	EA	SKIRT - F/GLIDER CHAIR (TT2, TT3)
2	139083-01-TT4	EA	SKIRT - F/GLIDER CHAIR (TT4, TT5)
2	139083-03-TT6	EA	SKIRT - F/GLIDER CHAIR (TT6, TT7)
2	139083-01-S07	EA	SKIRT - F/GLIDER CHAIR (TT8, TT9)
2	139083-01-S16	EA	SKIRT - F/GLIDER CHAIR (TU0, TU1)
2	139083-01-TU2	EA	SKIRT - F/GLIDER CHAIR (TU2, TU3)
3	139208-01-000	EA	SUPPORT BAR - TALL - W/HOOP
4	139342-01-000	EA	BRACKET - ROCKERLOCK
5	139342-02-000	EA	SPRING-#9GL-SPRING,LOCK OUT - SHROCK
6	133126-15-000	EA	BASE - SWIVEL/GLIDER - W/FLOOR RING

COPYRIGHT © 2007 WINNEBAGO INDUSTRIES INC.

CURTAIN & CUSHION GROUP (CONTINUED)

SOFA

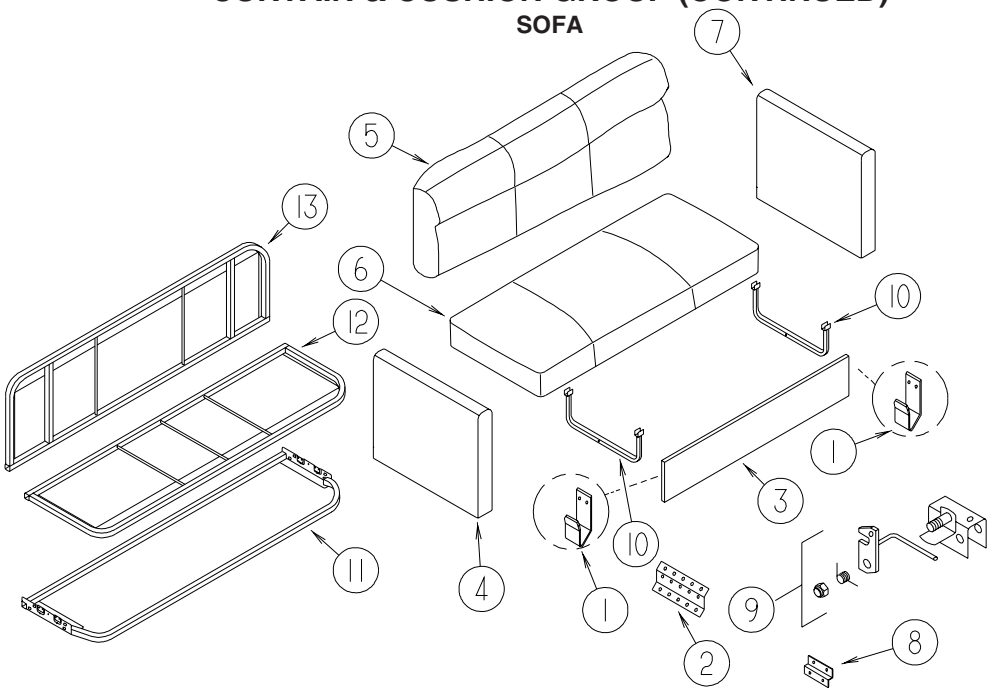

SOFA LH

KEY	PART NUMBER	U/M	DESCRIPTION
1	121906-01-02B	EA	BRACKET - KICKBOARD - E-COATED
2	NOT USED		
3	120992-09-T53	EA	PANEL/FRONT KICK - SOFA/BED - 67.5" - FABRIC COVERED (T53, TL0)
3	120992-09-T54	EA	PANEL/FRONT KICK - SOFA/BED - 67.5" - FABRIC COVERED (T54, TL1)
3	120992-09-S30	EA	PANEL/FRONT KICK - SOFA/BED - 67.5" - FABRIC COVERED (T55, TL2)
4	NOT USED		
5	135138-04-T53	EA	BACK - SOFA/BED - 67.5" (T53, TL0)
5	135138-04-T54	EA	BACK - SOFA/BED - 67.5" (T54, TL1)
5	135138-04-T55	EA	BACK - SOFA/BED - 67.5" (T55, TL2)
	P35138-04-T53	EA	COVER/BACK - SOFA/BED - 67.5" (T53, TL0)
	P35138-04-T54	EA	COVER/BACK - SOFA/BED - 67.5" (T54, TL1)
	P35138-04-S30	EA	COVER/BACK - SOFA/BED - 67.5" (T55, TL2)
6	135138-19-T53	EA	SEAT - SOFA/BED - 67.5" (T53, TL0)
6	135138-19-T54	EA	SEAT - SOFA/BED - 67.5" (T54, TL1)
6	135138-19-S30	EA	SEAT - SOFA/BED - 67.5" (T55, TL2)
	P35138-19-T53	EA	COVER/SEAT - SOFA/BED (T53, TL0)
	P35138-19-T54	EA	COVER/SEAT - SOFA/BED (T54, TL1)
	P35138-19-S30	EA	COVER/SEAT - SOFA/BED (T55, TL2)
7	155316-01-T53	EA	PANEL/END CAP - SOFA - FABRIC COVERED (T53, TL0)
7	155316-01-T54	EA	PANEL/END CAP - SOFA - FABRIC COVERED (T54, TL1)
7	155316-01-S30	EA	PANEL/END CAP - SOFA - FABRIC COVERED (T55, TL2)
8	NOT USED		
9	NOT USED		
10	127335-07-000	EA	LEG - SOFA/BED - 8"
11	127335-04-000	EA	FRAME/BASE - (SEAT) - 67.5"
			FROM: 00-00-00 THRU: 03-24-05
11	151290-20-000	EA	FRAME - BASE - 27.25" X 67.5"
			FROM: 03-25-05 THRU: 99-99-99
	136534-15-001	EA	MOTOR - DRIVE - SOFA
12	151290-05-000	EA	FRAME - SEAT - 67.5"
13	127335-05-000	EA	FRAME/BASE - (BACK) - 67.5"

COPYRIGHT © 2007 WINNEBAGO INDUSTRIES INC.

CURTAIN & CUSHION GROUP (CONTINUED)

SOFA (CONTINUED)

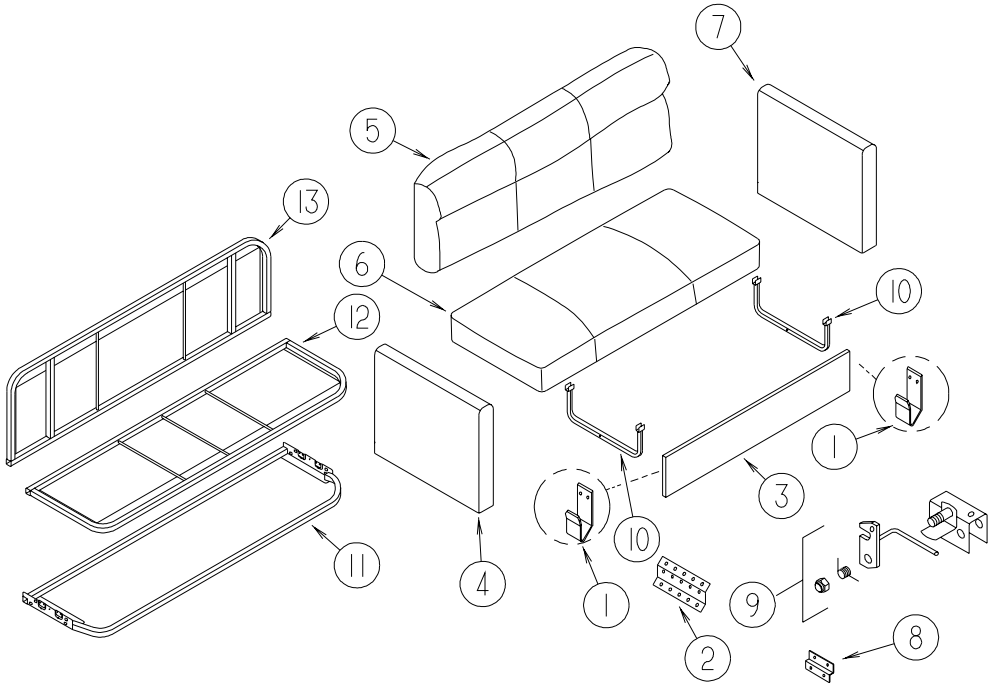

SOFA RH

KEY	PART NUMBER	U/M	DESCRIPTION
1	121906-01-02B	EA	BRACKET - KICKBOARD - E-COATED
2	NOT USED		
3	155857-03-T53	EA	PANEL/FRONT KICK - SOFA - 57" (T53, TL0)
3	155857-03-T54	EA	PANEL/FRONT KICK - SOFA - 57" (T54, TL1)
3	155857-03-T55	EA	PANEL/FRONT KICK - SOFA - 57" (T55, TL2)
4	134282-01-T53	EA	PANEL - RIGHT END/SHORT - SOFA/BED - FABRIC COVERED (T53, TL0)
4	134282-01-T12	EA	PANEL - RIGHT END/SHORT - SOFA/BED - FABRIC COVERED (T54, TL1)
4	134282-01-S30	EA	PANEL - RIGHT END/SHORT - SOFA/BED - FABRIC COVERED (T55, TL2)
5	157039-01-T53	EA	BACK - SOFA/BED - 56" (T53, TL0)
5	157039-01-T54	EA	BACK - SOFA/BED - 56" (T54, TL1)
5	157039-01-T55	EA	BACK - SOFA/BED - 56" (T55, TL2)
	157039-A1-T53	EA	COVER/BACK - SOFA/BED - 56" (T53, TL0)
	157039-A1-T54	EA	COVER/BACK - SOFA/BED - 56" (T54, TL1)
	157039-A1-T55	EA	COVER/BACK - SOFA/BED - 56" (T55, TL2)
6	157042-01-T53	EA	SEAT - SOFA/BED - 56" (T53, TL0)
6	157042-01-T54	EA	SEAT - SOFA/BED - 56" (T54, TL1)
6	157042-01-T55	EA	SEAT - SOFA/BED - 56" (T55, TL2)
	157042-A1-T53	EA	COVER/SEAT - SOFA/BED- 56" (T53, TL0)
	157042-A1-T54	EA	COVER/SEAT - SOFA/BED- 56" (T54, TL1)
	157042-A1-T55	EA	COVER/SEAT - SOFA/BED- 56" (T55, TL2)
7	134282-05-T53	EA	PANEL - LEFT END/TALL - SOFA/BED - FABRIC COVERED (T53, TL0)
7	134282-05-T54	EA	PANEL - LEFT END/TALL - SOFA/BED - FABRIC COVERED (T54, TL1)
7	134282-05-T55	EA	PANEL - LEFT END/TALL - SOFA/BED - FABRIC COVERED (T55, TL2)
8	116104-04-02B	EA	BRACKET - ZEE W/HOLES - 3.2" - E-COATED
9	NOT USED		
10	127335-12-000	EA	LEG - SOFA/BED - 10"
11	151290-23-000	EA	FRAME - BASE - 27.25" X 56"
12	151290-24-000	EA	FRAME - SEAT - 26.5" X 56"
13	151290-25-000	EA	FRAME - BACK - 14.5" X 56"

COPYRIGHT © 2007 WINNEBAGO INDUSTRIES INC.

CURTAIN & CUSHION GROUP (CONTINUED)

WINDOW TREATMENT

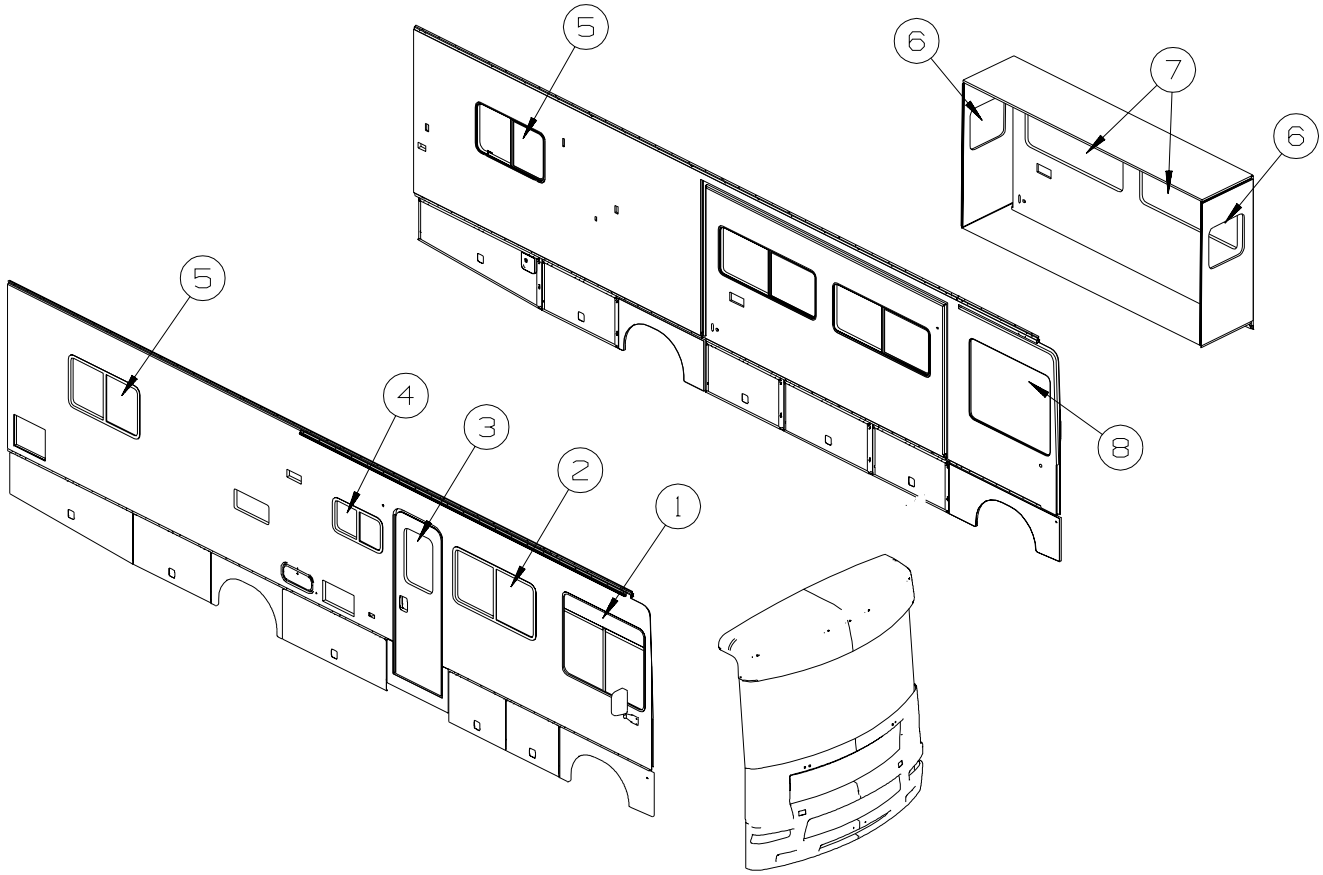

KEY	PART NUMBER	U/M	DESCRIPTION
1	101668-71-T53	EA	CURTAIN - RIGHT HAND - TAPE TOP - 40.5" X 110" (T53, TL0)
1	101668-71-T54	EA	CURTAIN - RIGHT HAND - TAPE TOP - 40.5" X 110" (T54, TL1)
1	101668-71-R98	EA	CURTAIN - RIGHT HAND - TAPE TOP - 40.5" X 110" (T55, TL2)
1	073260-42-T53	EA	TIEBACK - 6" X 18" (T53, TL0)
1	073260-42-T54	EA	TIEBACK - 6" X 18" (T54, TL1)
1	073260-42-R98	EA	TIEBACK - 6" X 18" (T55, TL2)
2	149201-16-T53	EA	VALANCE - TONYA - 53" (T53, TL0)
2	149201-16-T54	EA	VALANCE - TONYA - 53" (T54, TL1)
2	149201-16-T55	EA	VALANCE - TONYA - 53" (T55, TL2)
2	109041-31-02A	EA	BLIND - MINI - 49" X 30"
2	140789-42-S34	EA	BLIND - DAY/NIGHTER - 49" X 29" (T53, T55, TL0, TL2) - WINDOW COVERING EXCHANGE
2	140789-42-T54	EA	BLIND - DAY/NIGHTER - 49" X 29" (T54, TL1) - WINDOW COVERING EXCHANGE
3	153643-02-T53	EA	VALANCE - MODERATE - 12" X 32" (T53, TL0)
3	153643-02-T54	EA	VALANCE - MODERATE - 12" X 32" (T54, TL1)
3	153643-02-T55	EA	VALANCE - MODERATE - 12" X 32" (T55, TL2)
3	084755-57-P37	EA	SHADE - PULL - 27.25"
4	109041-44-02A	EA	BLIND - 30.5" X 18"
5	149201-04-T53	EA	VALANCE - TONYA - 46" (T53, TL0)
5	149201-04-T54	EA	VALANCE - TONYA - 46" (T54, TL1)
5	149201-04-S30	EA	VALANCE - TONYA - 46" (T55, TL2)
5	152664-29-T53	EA	LEG - RIGHT - 26" (T53, TL0)
5	152664-29-T54	EA	LEG - RIGHT - 26" (T54, TL1)
5	152664-29-T55	EA	LEG - RIGHT - 26" (T55, TL2)
5	152664-30-T53	EA	LEG - LEFT - 26" (T53, TL0)
5	152664-30-T54	EA	LEG - LEFT - 26" (T54, TL1)
5	152664-30-T55	EA	LEG - LEFT - 26" (T55, TL2)
5	109802-64-N21	EA	BLIND - PLEATED - 43" X 28" (T53, T55, TL0, TL2)
5	109802-64-T54	EA	BLIND - PLEATED - 43" X 28" (T54, TL1)
5	140789-02-N02	EA	BLIND - DAY/NIGHTER - 43" X 28" (T53, T55, TL0, TL2) - WINDOW COVERING EXCHANGE
5	140789-02-T54	EA	BLIND - DAY/NIGHTER - 43" X 28" (T54, TL1) - WINDOW COVERING EXCHANGE

COPYRIGHT © 2007 WINNEBAGO INDUSTRIES INC.

CURTAIN & CUSHION GROUP (CONTINUED)

WINDOW TREATMENT (CONTINUED)

KEY	PART NUMBER	U/M	DESCRIPTION
6	149201-09-T53	EA	VALANCE - TONYA - 26" (T53, TL0)
6	149201-09-T54	EA	VALANCE - TONYA - 26" (T54, TL1)
6	149201-09-S30	EA	VALANCE - TONYA - 26" (T55, TL2)
6	152664-49-T53	EA	LEG - RIGHT - 21.5" (T53, TL0)
6	152664-49-T54	EA	LEG - RIGHT - 21.5" (T54, TL1)
6	152664-49-T55	EA	LEG - RIGHT - 21.5" (T55, TL2)
6	152664-50-T53	EA	LEG - LEFT - 21.5" (T53, TL0)
6	152664-50-T54	EA	LEG - LEFT - 21.5" (T54, TL1)
6	152664-50-T55	EA	LEG - LEFT - 21.5" (T55, TL2)
6	109041-73-02A	EA	BLIND - MINI - 22.5" X 23"
6	140789-07-N02	EA	BLIND - DAY/NIGHTER - 22.5" X 23" (T53, T55, TL0, TL2) - WINDOW COVERING EXCHANGE
6	140789-07-T54	EA	BLIND - DAY/NIGHTER - 22.5" X 23" (T54, TL1) - WINDOW COVERING EXCHANGE
7	149201-01-T53	EA	VALANCE - TONYA - 62.5" (T53, TL0)
7	149201-01-T54	EA	VALANCE - TONYA - 62.5" (T54, TL1)
7	149201-01-S30	EA	VALANCE - TONYA - 62.5" (T55, TL2)
7	152445-13-T53	EA	LEG - RIGHT - 25" (T53, TL0)
7	152445-13-T54	EA	LEG - RIGHT - 25" (T54, TL1)
7	152445-13-T55	EA	LEG - RIGHT - 25" (T55, TL2)
7	152445-14-T53	EA	LEG - LEFT - 25" (T53, TL0)
7	152445-14-T54	EA	LEG - LEFT - 25" (T54, TL1)
7	152445-14-T55	EA	LEG - LEFT - 25" (T55, TL2)
7	109041-66-02A	EA	BLIND - MINI - 59" X 26"
7	140789-08-N02	EA	BLIND - DAY/NIGHTER - 59" X 26.5" (T53, T55, TL0, TL2) - WINDOW COVERING EXCHANGE
7	140789-08-T54	EA	BLIND - DAY/NIGHTER - 59" X 26.5" (T54, TL1) - WINDOW COVERING EXCHANGE
8	101668-72-T53	EA	CURTAIN - LEFT HAND - TAPE TOP - 40.5" X 110" (T53, TL0)
8	101668-72-T54	EA	CURTAIN - LEFT HAND - TAPE TOP - 40.5" X 110" (T54, TL1)
8	101668-72-R98	EA	CURTAIN - LEFT HAND - TAPE TOP - 40.5" X 110" (T55, TL2)
8	073260-42-T53	EA	TIEBACK - 6" X 18" (T53, TL0)
8	073260-42-T54	EA	TIEBACK - 6" X 18" (T54, TL1)
8	073260-42-R98	EA	TIEBACK - 6" X 18" (T55, TL2)

COPYRIGHT © 2007 WINNEBAGO INDUSTRIES INC.

CURTAIN & CUSHION GROUP (CONTINUED)

HARDWARE

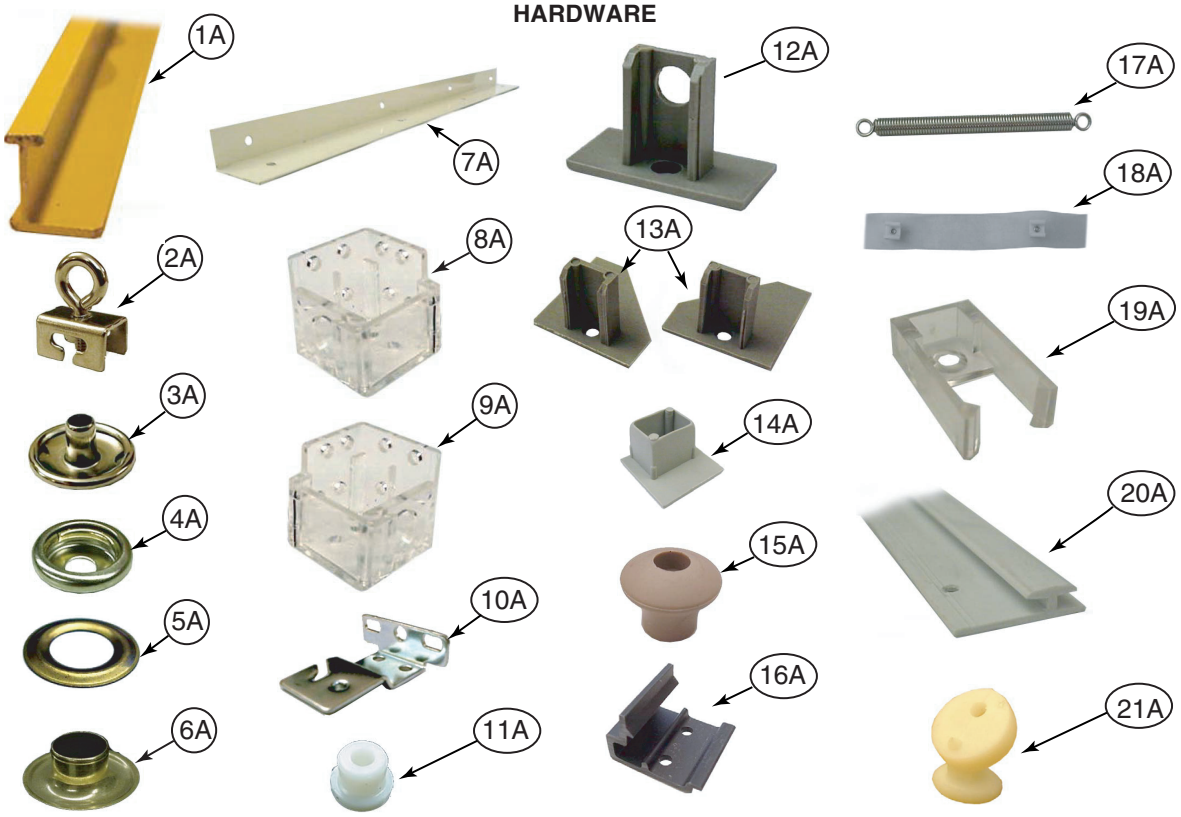

KEY	PART NUMBER	U/M	DESCRIPTION
1A	009700-04-002	EA	TRACK - CURTAIN - L-SHAPED - 15.5' - OFF WHITE - MINNIE WINNIE/SUNDANCER 400-SERIES
2A	009702-01-000	EA	END STOP - CURTAIN CARRIER - L ROD
3A	029155-01-000	EA	CAP - SNAP - 5/32" OUTSIDE DIAMETER OF PIN
4A	029156-01-000	EA	SOCKET - SNAP - 9/16" O.D.
5A	046867-02-000	EA	WASHER - HANDY BUTTON #3
6A	046867-03-000	EA	GROMMET - HANDY BUTTON #3
7A	075943-10-000	EA	BRACE - VALANCE - 20" - OFF WHITE
8A	083170-01-000	EA	BRACKET/BLIND - LEFT SIDE WHEN FACING WINDOW - CLEAR
9A	083170-02-000	EA	BRACKET/BLIND - RIGHT SIDE WHEN FACING WINDOW - CLEAR
10A	084434-01-000	EA	BRACKET - MOUNTING - ROLLER SHADE - 1 3/8"
11A	094896-02-000	EA	GROMMET - CORD/PLEATED BLIND - NYLON - GRAY
12A	094907-02-000	EA	END CAP - PLEATED BLIND/TOP - RH/LH - GRAY PLASTIC
13A	094907-04-000	EA	END CAP - PLEATED BLIND/BOTTOM - RH/LH
14A	094907-09-000	EA	END CAP/BLIND - CENTER RAIL - RH/LH
15A	097564-03-000	EA	HANDLE - KNOB - E-Z LIFT SHADE - TAN
	097593-02-000	FT	CORD - BLIND - PLEATED - GRAY
	097593-10-000	FT	CORD - BLIND - PLEATED - VANILLA
16A	097565-01-000	EA	BRACKET - MOUNTING - PLEATED BLIND
17A	097591-01-000	EA	SPRING - EXTENSION - PLEATED BLIND
17A	155748-01-000	EA	SPRING - EXTENSION - DAY/NIGHTER BLIND
18A	101031-01-000	YD	TAPE/GLIDE - 4.25" SPACING
19A	101033-02-000	EA	END CAP - LOW PROFILE TRACK - CLEAR
			FROM: 00-00-00 THRU: 09-04-05
	156172-04-01A	EA	END CAP - WALL TRACK - CLEAR
			FROM: 09-05-05 THRU: 99-99-99
20A	101033-08-000	EA	TRACK/WALL - 75" - FRT BUNK WINDOW OUTLOOK/SPIRIT 300-SERIES
			FROM: 00-00-00 THRU: 09-04-05
	156172-01-01A	EA	TRACK/WALL - 75" - BONE - FRT BUNK WINDOW OUTLOOK/SPIRIT 300-SERIES
			FROM: 09-05-05 THRU: 99-99-99
20A	101033-09-000	EA	TRACK - SIDE BUNK WDO OUTLOOK/SPIRIT 300/MINNIE WINNIE/SUNDANCER 400/VIEW/NAVION 500
			FROM: 00-00-00 THRU: 09-04-05
	156172-02-01A	EA	TRACK - 32" - SIDE BUNK WINDOW OUTLOOK/SPIRIT 300-SER/MINNIE WINNIE/SUNDANCER 400-SER
			FROM: 09-05-05 THRU: 99-99-99
	156172-03-01A	EA	TRACK/WALL - 20" -BONE - SIDE BUNK WINDOW VIEW/NAVION 500-SERIES
			FROM: 09-05-05 THRU: 99-99-99
21A	102555-03-000	EA	BRACKET - (CLEAT TYPE) - F/BLIND HOLDOWN - MILKY WHITE

COPYRIGHT © 2007 WINNEBAGO INDUSTRIES INC.

CURTAIN & CUSHION GROUP (CONTINUED)

HARDWARE (CONTINUED)

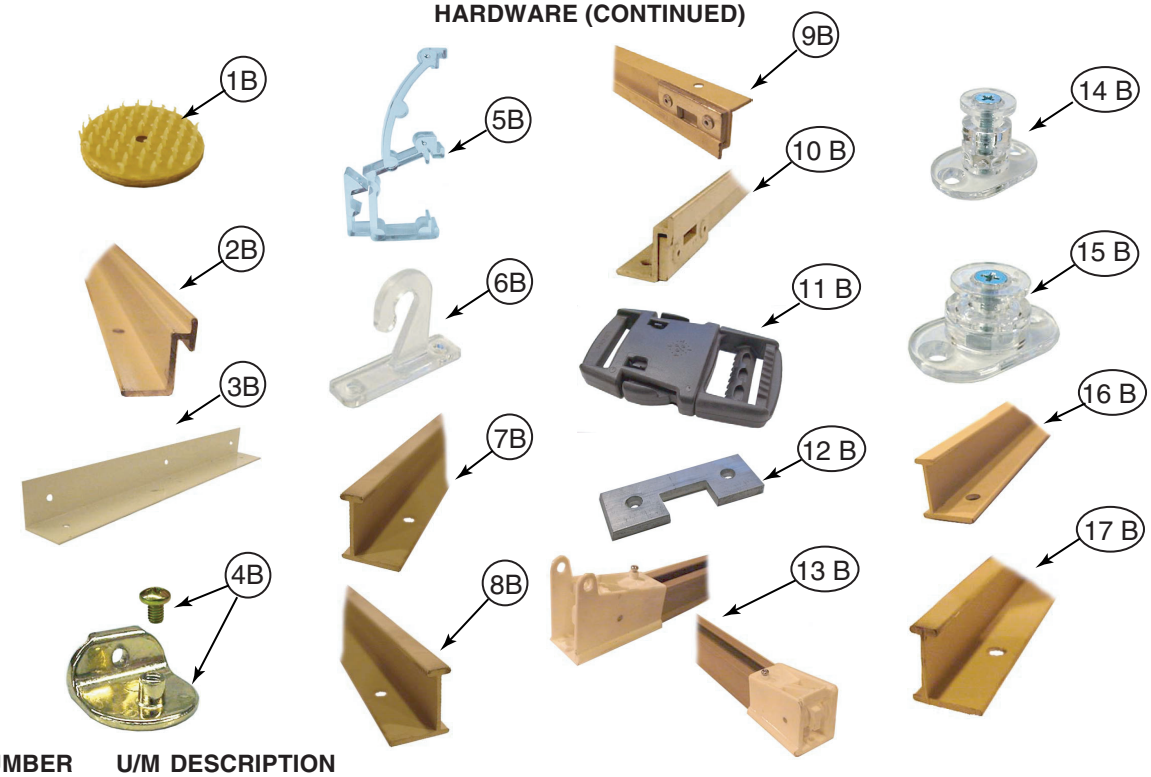

KEY	PART NUMBER	U/M	DESCRIPTION
1B	103242-01-000	EA	VELCRO HOOK - BEIGE 7/8" ROUND W/CENTER HOLE
	103242-02-000	EA	VELCRO HOOK - BLACK 7/8" ROUND W/CENTER HOLE
2B	105450-14-01A	EA	TRACK - CURTAIN - 90" - OFF WHITE - FRONT BUNK PRIVACY MINNIE/SPIRIT 300-SERIES
2B	105450-02-01A	EA	TRACK - CURTAIN - 48" - OFF WHITE - REAR PRIVACY MINNIE/SPIRIT 300-SERIES
2B	105450-08-01A	EA	TRACK - CURTAIN - 38" - OFF WHITE - REAR PRIVACY MINNIE/SPIRIT 300-SERIES
3B	105648-01-02A	EA	BRACE - VALANCE - 14" - OFF WHITE
4B	106544-01-000	EA	PULL - SHADE/BRASS
4B	106544-01-001	EA	SCREW - SHADE/BRASS
4B	106544-02-000	EA	PULL-SHADE - NICKEL
5B	109353-04-000	EA	CLIP - VALANCE SLAT MOUNTING - CLEAR PLASTIC
6B	109441-03-000	EA	BRACKET/HOOK - BLIND HOLD DOWN - NEW DESIGN/CLEAR
	109441-02-000	EA	SPACER/BRACKET - BLIND HOLD DOWN
7B	126456-03-05A	EA	TRACK/WRAPAROUND - PASSENGER - RIVERSTONE - ADVENTURER/SUNCRUISER G-SERIES
	126456-03-06A	EA	TRACK/WRAPAROUND - PASSENGER - CASHMERE - ADVENTURER/SUNCRUISER G-SERIES
8B	126456-04-05A	EA	TRACK/WRAPAROUND - DRIVER - RIVERSTONE - ADVENTURER/SUNCRUISER G-SERIES
	126456-04-06A	EA	TRACK/WRAPAROUND - DRIVER - CASHEMERE - ADVENTURER/SUNCRUISER G-SERIES
9B	127254-04-05A	EA	TRACK/WRAPARND-DRVR-GLACIER - SIGHTSEER/SUNOVA D-SERIES, VOYAGE/SUNRISE F-SERIES
10B	127254-14-03A	EA	TRACK/WRAPARND-PASS-GLACIER - SIGHTSEER/SUNOVA D-SERIES, VOYAGE/SUNRISE F-SERIES
11B	129491-01-000	EA	CATCH - SNAP HOOK - 1"
12B	130549-01-01A	EA	STOP - CURTAIN TRACK
13B	138460-07-03A	EA	TRACK - PASSENGER - RIVERSTONE- VECTRA/HORIZON S-SERIES/TOUR/ELLIPSE R-SERIES
	138460-07-04A	EA	TRACK - PASS ENGERY - CASHMERE- VECTRA/HORIZON S-SERIES/TOUR/ELLIPSE R-SERIES
13B	138460-08-03A	EA	TRACK - DRIVER - RIVERSTONE- VECTRA/HORIZON S-SERIES/TOUR/ELLIPSE R-SERIES
	138460-08-04A	EA	TRACK - DRIVER - CASHMERE- VECTRA/HORIZON S-SERIES/TOUR/ELLIPSE R-SERIES
14B	141634-01-000	EA	BRACKET-(BOBBIN TYPE) 7/8"H HOLDUPBASE(OVAL)-2 HOLE-CLEAR
15B	143805-01-000	EA	BRACKET-(BOBBIN TYPE) 1/2"H HOLDUPBASE(OVAL)-2 HOLES CLEAR
16B	146591-01-02A	EA	TRACK - CURTAIN - LEFT HAND - RIVERSTONE - JOURNEY/MERIDIAN P-SERIES
	146591-01-03A	EA	TRACK - CURTAIN - LEFT HAND - CASHMERE - JOURNEY/MERIDIAN P-SERIES
17B	146591-02-02A	EA	TRACK - CURTAIN - RIGHT HAND - RIVERSTONE - JOURNEY/MERIDIAN P-SERIES
	146591-02-03A	EA	TRACK - CURTAIN - RIGHT HAND - CASHMERE - JOURNEY/MERIDIAN P-SERIES
	154316-01-01A	EA	BRACE/ANGLE - W/HOLE - CASHMERE

ACCESSORIES

KEY	PART NUMBER	U/M	DESCRIPTION
	070578-02-N30	EA	BUTTON - SCREW - STUD - #30 VINYL
	057534-03-000	EA	TIEBACK - CLEAR PLASTIC - 7.5"

COPYRIGHT © 2007 WINNEBAGO INDUSTRIES INC.

CURTAIN & CUSHION GROUP (CONTINUED)

FABRICS

2005 FAMILY	T53/TL0 JASPER PARK	T54/TL1 GINGER SNAP	T55/TL2 STONEBROOK
BUCKET	580 WIDE MAN. REC.	580 WIDE MAN. REC.	580 WIDE MAN. REC.
	148797-20-000	148797-71-000	126883-W9-000
	148797-D5-000 welt	137813-58-000 welt	126883-W9-000 welt
	LEATHER - PUTTY	LEATHER - DRIFTWOOD	LEATHER - PUTTY
DINETTE	CURVED CLUB	CURVED CLUB	CURVED CLUB
	148797-D3-000	148797-70-000	126883-W8-000
	SEAT 148797-D5-000		
DINETTE PADS	148797-D5-000	137813-58-000	148797-W9-000
	148797-D3-000 (2"TABS)	148797-70-000 (2"TABS)	126883-W8-000 (2"TABS)
SOFA	695 COMFORT LOUNGE	695 COMFORT LOUNGE	695 COMFORT LOUNGE
	148797-D3-000	148797-70-000	126883-W8-000
LOUNGE CHAIR	465 GLIDER CHAIR	465 GLIDER CHAIR	465 GLIDER CHAIR
	148797-20-000	148797-71-000	126883-W9-000
LOUNGE WINDOWS	TONYA VALANCE	TONYA VALANCE	TONYA VALANCE
	BODY 148797-D5-000	BODY 137813-58-000	BODY 148797-W9-000
	OVERLAY - 148797-D3-000	OVERLAY - 148797-70-000	OVERLAY - 126883-W8-000
	LEGS - 148797-D5-000	LEGS - 137813-58-000	LEGS - 148797-W9-000
	CORD 139041-50-000	CORD 139041-53-000	CORD 139041-52-000
ENT. DOOR CLOCK	8" ROUND SATIN NICKEL	8" ROUND SATIN NICKEL	8" ROUND SATIN NICKEL
LOUNGE PILLOW	(1) TONYA STYLE	(1) TONYA STYLE	(1) TONYA STYLE
	BODY -148797-D5-000	BODY - 137813-58-000	BODY - 148797-W9-000
	"T" OVERLAY - 148797-D3-000	"T" OVERLAY - 148797-70-000	"T" OVERLAY - 126883-W8-000
	CORD TRIM - 139041-50-000	CORD TRIM - 139041-53-000	CORD TRIM - 139041-52-000
FWA	137813-M8-000	137813-G5-000	137813-27-000
DAY/NIGHTER	094911-53-000	094911-66-000	094911-53-000
	COTTON	PEARL	COTTON
GALLEY VALANCE	**MODERAT 148797-D3-000**	**MODERAT 148797-70-000**	**MODERAT 126883-W8-000**
D34 ONLY	**CORD TRIM 139041-50-000**	**CORD TRIM 139041-53-000**	**CORD TRIM 139041-52-000**
GALLEY BLINDS	C011 BEIGE	C011 BEIGE	C011 BEIGE
BEDROOM WDO TREATMENT	TONYA VALANCE	TONYA VALANCE	TONYA VALANCE
	BODY/LEGS 137813-M8-000	BODY/LEGS 137813-G5-000	BODY/LEGS 137813-27-000
	T-OVERLAY 137813-M7-000	T-OVERLAY 137813-G6-000	T-OVERLAY 137813-A1-000
BEDCOVER	BEDCAP W/1/2" N-G WELT	BEDCAP W/1/2" N-G WELT	BEDCAP W/1/2" N-G WELT
	137813-M7-000	137813-G6-000	137813-A1-000
QUILT PATTERN	6" CHANNEL	6" CHANNEL	6" CHANNEL
SHAMS	1/2" NON-GATH. WELT	1/2" NON-GATH. WELT	1/2" NON-GATH. WELT
	BODY 137813-M8-000	BODY 137813-G5-000	BODY 137813-A1-000
	WELT 137813-M7-000	WELT 137813-G6-000	WELT 137813-27-000
BED PILLOW	(1) TONYA STYLE	(1) TONYA STYLE	(1) TONYA STYLE
	BODY & WELT - 137813-M8-000	**BODY & T OVLY- 137813-G5-000**	BODY & WELT - 137813-27-000
	"T" OVERLAY - 137813-M7-000	**BRAID 139041-53-000**	BRAID 139041-52-000
HEADBOARD	TONYA W/1/2" WELT	TONYA W/1/2" WELT	TONYA W/1/2" WELT
	BODY - 137813-M8-000	BODY - 137813-G5-000	BODY - 137813-27-000
	T-OVERLAY - 137813-M7-000	T-OVERLAY - 137813-G6-000	T-OVERLAY - 137813-A1-000
	WELT - 137813-M7-000	WELT - 137813-G6-000	WELT - 137813-A1-000
CARPET	152251-05-02A	096060-H1-000	1522510-05-05A
CARPET TAPE	102695-18-000	102695-12-000	102695-22-000
VANITY STOOL	LID137813-M7-000	LID 137813-G6-000	LID 137813-A1-000
	LOWER BAND 137813-M8-000	LOWER BAND 137813-G5-00	LOWER BAND 137813-27-000
	LID WELT 137813-M8-000	LID WELT 137813-G5-000	LID WELT 137813-27-000
CEILING MATERIAL	113979-09-01A	113979-09-01A	113979-09-01A

COPYRIGHT © 2007 WINNEBAGO INDUSTRIES INC.

CURTAIN & CUSHION GROUP (CONTINUED)

FABRICS (CONTINUED)

TT2/TT3 BEACHGRASS BLUE	TT4/TT5 WILLOW GREEN	TT6/TT7 OYSTER BAY	TT8/TT9 OCEAN PACIFIC
580 WIDE MAN. REC.	580 WIDE MAN. REC.	580 WIDE MAN. REC.	580 WIDE MAN. REC.
126883-Y2-000	148797-52-000	148797-42-000	126883-V6-000
DRIFTWOOD	**DRIFTWOOD**		
CURVED CLUB	CURVED CLUB	CURVED CLUB	CURVED CLUB
126883-Y1-000	126883-X6-000	126883-V9-000	126883-T3-000
126883-Y1-000	148797-52-000	126883-v9-000	126883-V6-000
126883-Y2-000 (2" TABS)	126883-X6-000 (2" TABS)	148797-42-000 (2"TABS)	126883-T3-000 (2"TABS)
695 COMFORT LOUNGE	695 COMFORT LOUNGE	695 COMFORT LOUNGE	695 COMFORT LOUNGE
126883-Y1-000	126883-X6-000	126883-V9-000	126883-T3-000
465 GLIDER CHAIR	465 GLIDER CHAIR	465 GLIDER CHAIR	465 GLIDER CHAIR
126883-Y2-000	148797-52-000	148797-42-000	126883-V6-000
TONYA VALANCE	TONYA VALANCE	TONYA VALANCE	TONYA VALANCE
BODY&LEGS 126883-y1-000	BODY&LEGS 148797-52-000	BODY&LEGS 126883-v9-000	BODY&LEGS 126883-v6-000
OVERLAY/WELT-126883-Y2-000	OVERLAY/WELT-126883-X6-000	OVERLAY/WELT-148797-42-000	OVERLAY/WELT-126883-T3-000
126883-Y1-000 w/self welt on btm	148797-52-000 w/self welt on btm	126883-V9-000 w/self welt on btm	126883-V6-000 w/self welt on btm
8" ROUND SATIN NICKEL	8" ROUND SATIN NICKEL	8" ROUND SATIN NICKEL	8" ROUND SATIN NICKEL
(1) TONYA STYLE	(1) TONYA STYLE	(1) TONYA STYLE	(1) TONYA STYLE
BODY - 126883-Y1-000	BODY - 148797-52-000	BODY - 126883-V9-000	BODY - 126883-V6-000
OVERLAY/WLT-126883-Y2-000	OVERLAY/ WLT-1126883-X6-000	OVERLAY/WLT-148797-42-000	OVERLAY/WLT-126883-T3-000
137813-D5-000	072333-85-000	137813-88-000	072333-85-000
094911-53-000	094911-53-000	094911-53-000	094911-53-000
COTTON	COTTON	COTTON	COTTON
C011 BEIGE	C011 BEIGE	C011 BEIGE	C011 BEIGE
TONYA VALANCE	TONYA VALANCE	TONYA VALANCE	TONYA VALANCE
BODY/LEGS 137813-D5-000	BODY/LEGS 137813-82-000	BODY/LEGS 137813-88-000	BODY/LEGS 137813-C0-000
T-OVERLAY WWELT	T-OVERLAY W/WELT	T-OVERLAY W/WELT	T-OVERLAY W/WELT
137813-B1-000	137813-78-000	137813-87-000	137813-C0-000
BEDCAP W/1/2" N-G WELT	BEDCAP W/1/2" N-G WELT	BEDCAP W/1/2" N-G WELT	BEDCAP W/1/2" N-G WELT
137813-B1-000	137813-78-000	137813-87-000	137813-C0-000
6" CHANNEL	6" CHANNEL	6" CHANNEL	6" CHANNEL
1/2" NON-GATH. WELT	1/2" NON-GATH. WELT	1/2" NON-GATH. WELT	1/2" NON-GATH. WELT
BODY 137813-B1-000	BODY 137813-78-000	BODY 137813-87-000	BODY 137813-C0-000
WELT 137813-D5-000	WELT 137813-82-000	WELT 137813-88-000	WELT 137813-C0-000
(1) TONYA STYLE	(1) TONYA STYLE	(1) TONYA STYLE	(1) TONYA STYLE
BODY & WELT - 137813-D5-000	BODY & WELT - 137813-82-000	BODY & WELT - 137813-88-000	BODY & WELT -137813-C0-000
"T" OVERLAY - 137813-B1-000	"T" OVERLAY - 137813-78-000	"T" OVERLAY - 137813-87-000	"T" OVERLAY - 137813-C0-000
TONYA W/1/2" WELT	TONYA W/1/2" WELT	TONYA W/1/2" WELT	TONYA W/1/2" WELT
BODY - 137813-D5-000	BODY - 137813-82-000	BODY - 137813-88-000	BODY -137813-C0-000
T-OVERLAY - 137813-B1-000	T-OVERLAY - 137813-78-000	T-OVERLAY - 137813-87-000	T-OVERLAY - 137813-C0-000
WELT - 137813-B1-000	WELT - 137813-78-000	WELT - 137813-87-000	WELT - 137813-C0-000
152251-05-04A	152251-05-01A	152251-05-02A	152251-05-03A
102695-32-000	102695-28-000	102695-18-000	102695-33-000
LID - 137813-B1-000	LID - 137813-78-000	LID - 137813-87-000	LID - 137813-C0-000
LOWER BAND - 137813-D5-000	LOWER BAND - 137813-82-000	LOWER BAND - 137813-88-000	LOWER BAND - 137813-C0-000
LID WELT - 137813-D5-000	LID WELT - 137813-82-000	LID WELT - 137813-88-000	LID WELT -137813-C0-000
113979-09-01A	113979-09-01A	113979-09-01A	113979-09-01A

COPYRIGHT © 2007 WINNEBAGO INDUSTRIES INC.

DRIVERS COMPARTMENT GROUP

DASH

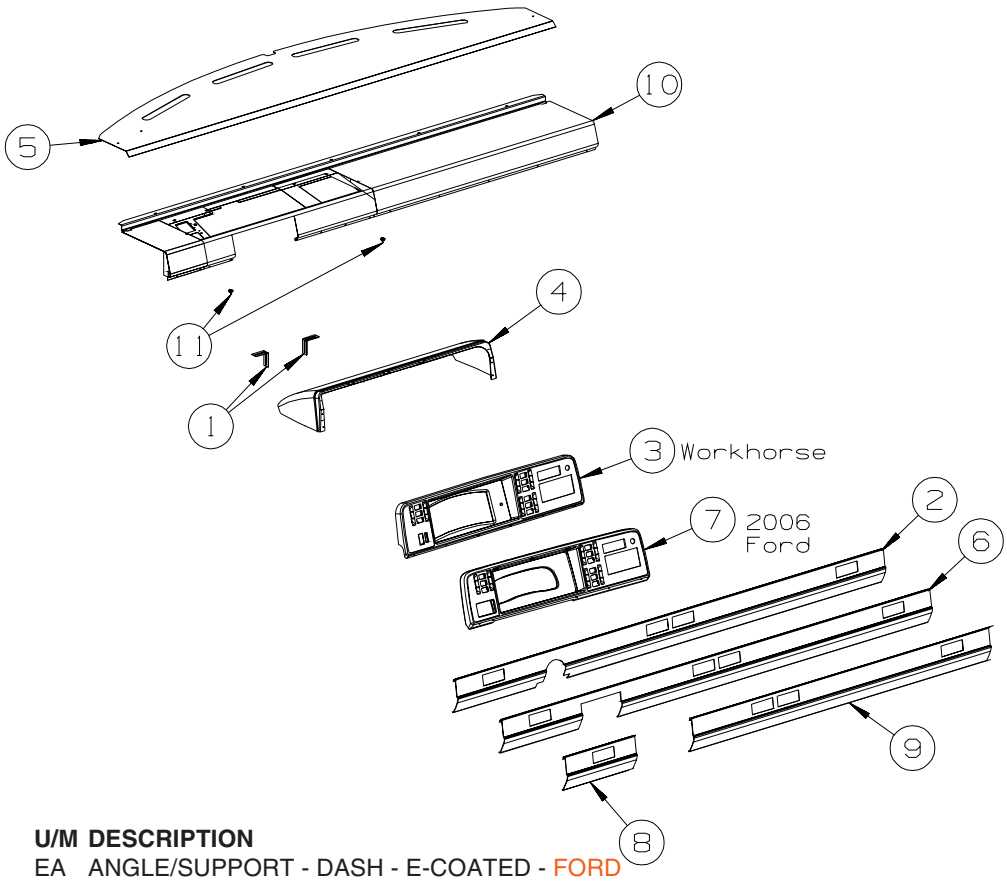

KEY	PART NUMBER	U/M	DESCRIPTION
1	143634-01-02B	EA	ANGLE/SUPPORT - DASH - E-COATED - FORD
2	114620-12-04A	EA	TRIM - LOWER DASH - 96" - GLACIER - P32 WORKHORSE
3	143642-01-03A	EA	BEZEL - INSTRUMENT PANE - RIVERSTONE - WORKHORSE
3	143642-01-04A	EA	BEZEL - INSTRUMENT PANEL - CASHMERE - WORKHORSE
4	125677-04-T53	EA	POD - INSTRUMENT PANEL - RIVERSTONE - FORD
4	125677-04-T54	EA	POD - INSTRUMENT PANE - CASHMERE - FORD
4	125677-02-T53	EA	POD - INSTRUMENT PANEL - RIVERSTONE - WORKHORSE
4	125677-02-T54	EA	POD - INSTRUMENT PANEL - CASHMERE - WORKHORSE
5	140037-02-02B	EA	PANEL - DASH TOP - E-COATED
6	114620-15-04A	EA	TRIM - LOWER DASH - GLACIER - W - SERIES WORKHORSE
7	103662-16-03A	EA	BEZEL/POD - INSTRUMENT PANEL - FORD - RIVERSTONE FROM: 00-00-00 THRU: 01-30-05
7	143642-02-03A	EA	BEZEL/POD - INSTRUMENT PANEL - FORD - RIVERSTONE FROM: 01-31-05 THRU: 99-99-99
7	103662-16-04A	EA	BEZEL/POD - INSTRUMENT PANEL - FORD - CASHMERE FROM: 00-00-00 THRU: 01-30-05
7	143642-02-04A	EA	BEZEL/POD - INSTRUMENT PANEL - FORD - CASHMERE FROM: 01-31-05 THRU: 99-99-99
8	111528-08-04A	EA	TRIM - DASH/LOWER - PASSENGER - GLACIER - FORD
9	111528-04-06A	EA	TRIM - DASH/LOWER - DRIVER - GLACIER - FORD
10	140038-01-02B	EA	DASH - E-COATED - WORKHORSE
10	140038-02-02B	EA	DASH - E-COATED - FORD
	106569-11-05A	EA	VINYL - LAMINATE - ALLANTE DOESKIN - 1/4" X 25" X 100"
	076767-05-000	EA	CABLE - STAINLESS STEEL - 15.5"
11	049176-01-000	EA	HEDLOCK II - 3/4 DIAMETER SCREW MOUNT

COPYRIGHT © 2007 WINNEBAGO INDUSTRIES INC.

DRIVERS COMPARTMENT GROUP (CONTINUED)

MOTOR COVER

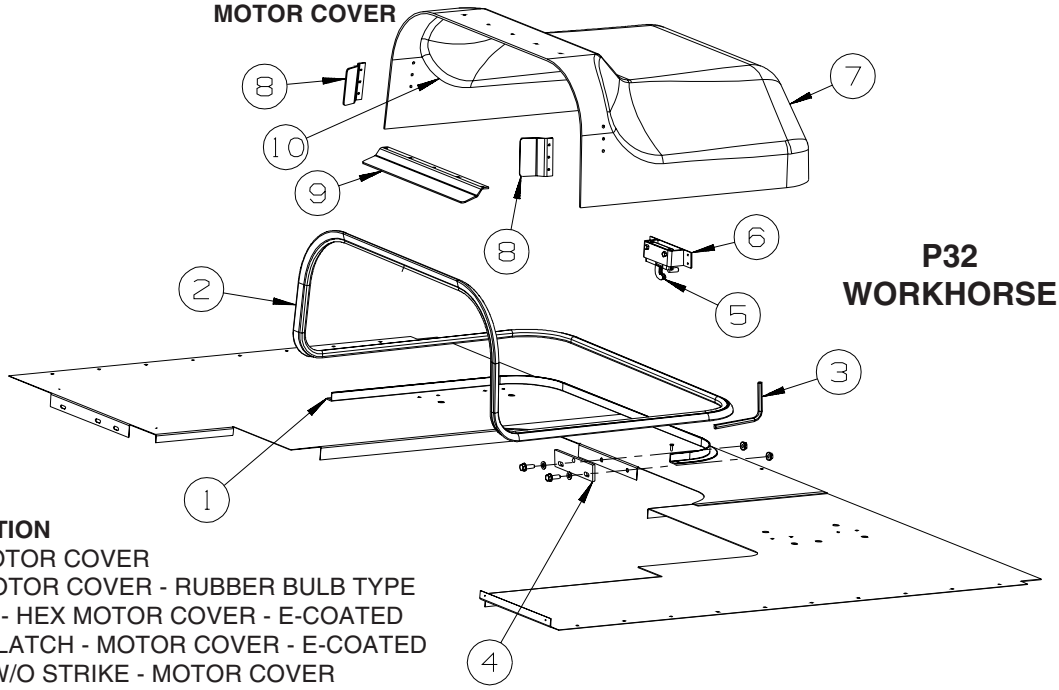

P32 WORKHORSE

KEY	PART NUMBER	U/M	DESCRIPTION
1	115860-04-01A	EA	TRIM - MOTOR COVER
2	039623-01-000	FT	SEAL - MOTOR COVER - RUBBER BULB TYPE
3	116833-01-02B	EA	WRENCH - HEX MOTOR COVER - E-COATED
4	115852-01-02B	EA	STRIKE - LATCH - MOTOR COVER - E-COATED
5	116581-01-000	EA	LATCH - W/O STRIKE - MOTOR COVER
6	115850-01-02B	EA	RETAINER - LATCH - MOTOR COVER - RIGHT HAND - E-COATED
7	129414-02-T53	EA	COVER - MOTOR - W/CARPET (T53, TL0, TT6, TT7, TU0, TU1, TU2, TU3)
7	129414-02-M32	EA	COVER - MOTOR - W/CARPET (T54, TL1)
7	129414-02-T55	EA	COVER - MOTOR - W/CARPET (T55, TL2)
7	129414-02-TT0	EA	COVER - MOTOR - W/CARPET (TT0, TT1, TT8, TT9)
7	129414-02-TT2	EA	COVER - MOTOR - W/CARPET (TT2, TT3)
7	129414-02-S28	EA	COVER - MOTOR - W/CARPET (TT4, TT5)
	129099-02-01A	EA	COVER - MOTOR - W/O CARPET - CHEVY P32 CHASSIS
8	115855-02-02B	EA	RETAINER - MOTOR COVER/SIDE - E-COATED
9	115855-01-02B	EA	RETAINER - MOTOR COVER/TOP - E-COATED
10	NOT USED		

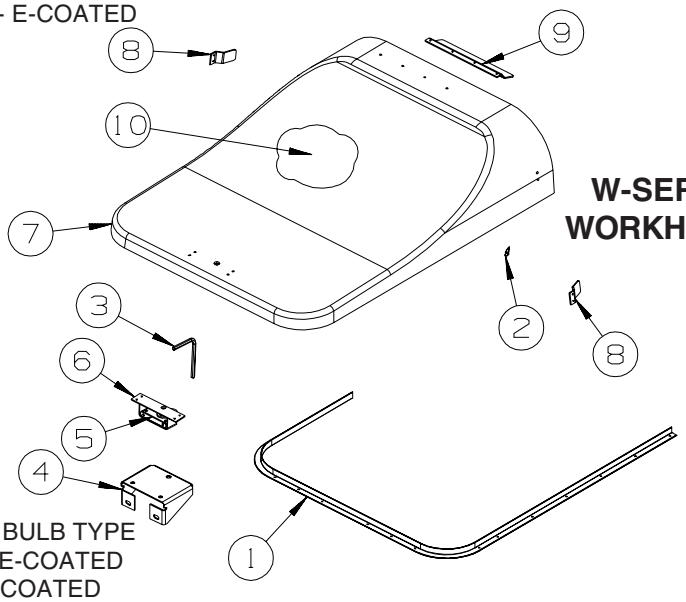

W-SERIES WORKHORSE

KEY	PART NUMBER	U/M	DESCRIPTION
1	137332-01-01A	EA	TRIM - MOTOR COVER
2	039623-01-000	FT	SEAL - MOTOR COVER - RUBBER BULB TYPE
3	116833-01-02B	EA	WRENCH - HEX MOTOR COVER - E-COATED
4	137305-02-02B	EA	BRACKET - STRIKE SUPPORT - E-COATED
5	116581-01-000	EA	LATCH - W/O STRIKE - MOTOR COVER
6	115850-01-02B	EA	RETAINER - LATCH - MOTOR COVER - RIGHT HAND - E-COATED
7	137097-01-T53	EA	COVER - MOTOR - W/CARPET (T53, TL0, TT6, TT7, TU0, TU1, TU2, TU3)
7	137097-01-T65	EA	COVER - MOTOR - W/CARPET (T54, TL1)
7	137097-01-T55	EA	COVER - MOTOR - W/CARPET (T55, TL2)
7	137097-01-TT0	EA	COVER - MOTOR - W/CARPET (TT0, TT1, TT8, TT9)
7	137097-01-TT2	EA	COVER - MOTOR - W/CARPET (TT2, TT3)
7	137097-01-T56	EA	COVER - MOTOR - W/CARPET (TT4, TT5)
	137096-01-01A	EA	COVER - MOTOR - W/O CARPET
8	115855-04-02B	EA	RETAINER - MOTOR COVER/SIDE - E-COATD
9	115855-03-02B	EA	RETAINER - MOTOR COVER/TOP - E-COATED
10	134497-01-000	SF	FOIL/ALUMINUM - REINFORCED
	140168-01-000	EA	INSULATION/ENGINE COVER

COPYRIGHT © 2007 WINNEBAGO INDUSTRIES INC.

DRIVERS COMPARTMENT GROUP (CONTINUED)

MOTOR COVER (CONTINUED)

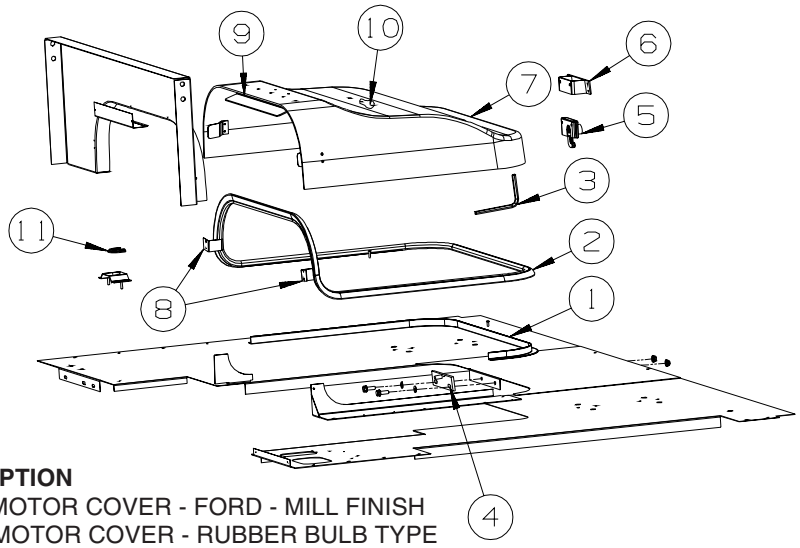

FORD

KEY	PART NUMBER	U/M	DESCRIPTION
1	115860-06-01A	EA	TRIM - MOTOR COVER - FORD - MILL FINISH
2	039623-01-000	FT	SEAL - MOTOR COVER - RUBBER BULB TYPE
3	116833-01-02B	EA	WRENCH - HEX MOTOR COVER - E-COATED
4	115852-01-02B	EA	STRIKE - LATCH - MOTOR COVER - E-COATED
5	116581-01-000	EA	LATCH - W/O STRIKE - MOTOR COVER
6	115850-01-02B	EA	RETAINER - LATCH - MOTOR COVER - RIGHT HAND - E-COATED
7	153971-02-T53	EA	COVER - MOTOR - W/CARPET (T53, TL0, TT6, TT7, TU0, TU1, TU2, TU3)
7	153971-02-T54	EA	COVER - MOTOR - W/CARPET (T54, TL1)
7	153971-02-T55	EA	COVER - MOTOR - W/CARPET (T55, TL2)
7	153971-02-TT0	EA	COVER - MOTOR - W/CARPET (TT0, TT1, TT8, TT9)
7	153971-02-TT2	EA	COVER - MOTOR - W/CARPET (TT2, TT3)
7	153971-02-T56	EA	COVER - MOTOR - W/CARPET (TT4, TT5)
	153970-01-01A	EA	COVER - MOTOR - W/O CARPET - FORD
8	115855-04-02B	EA	RETAINER - MOTOR COVER/SIDE - E-COATED
9	115855-01-02B	EA	RETAINER - MOTOR COVER/TOP - E-COATED
10	134497-01-000	SF	FOIL/ALUMINUM - REINFORCED
11	143798-01-01A	EA	CATCH - FLOOR TO TABLE LEG - BRIGHT WHITE

COPYRIGHT © 2007 WINNEBAGO INDUSTRIES INC.

DRIVERS COMPARTMENT GROUP (CONTINUED)

BEVERAGE TRAY

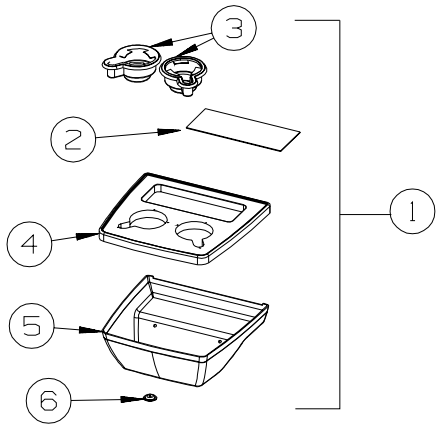

FORD

KEY	PART NUMBER	U/M	DESCRIPTION
1	149301-03-S28	EA	TRAY - BEVERAGE - W/CONVENIENCE TRAY - GLACIER
2	122717-11-01A	EA	PAD - NON-SKID - PSA - 4.5" X 11"
3	133831-01-01A	EA	HOLDER - CUP W/THREE CENTERLINE RUBBER FINGERS
4	148918-01-01A	EA	TRAY - BEVERAGE CENTER - SANDSTONE
5	149256-02-04A	EA	COVER - BEVERAGE TRAY BOTTOM - GLACIER
6	143798-02-01A	EA	CATCH - TABLE LEG TO FLOOR - BRIGHT WHITE

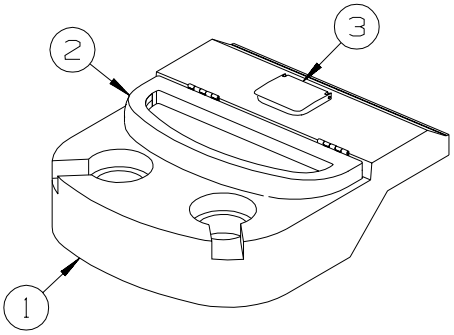

P32 WORKHORSE

KEY	PART NUMBER	U/M	DESCRIPTION
1	126008-02-N21	EA	TRAY - BEVERAGE - W/DOOR
	128114-01-04A	EA	TRAY/BEVERAGE - GLACIER
2	128113-01-N21	EA	LID - BEVERAGE TRAY
3	118719-01-01A	EA	ASHTRAY - TOP MOUNT - BLACK PLASTIC
	126010-01-03A	EA	SPACER - BEVERAGE TRAY - GLACIER

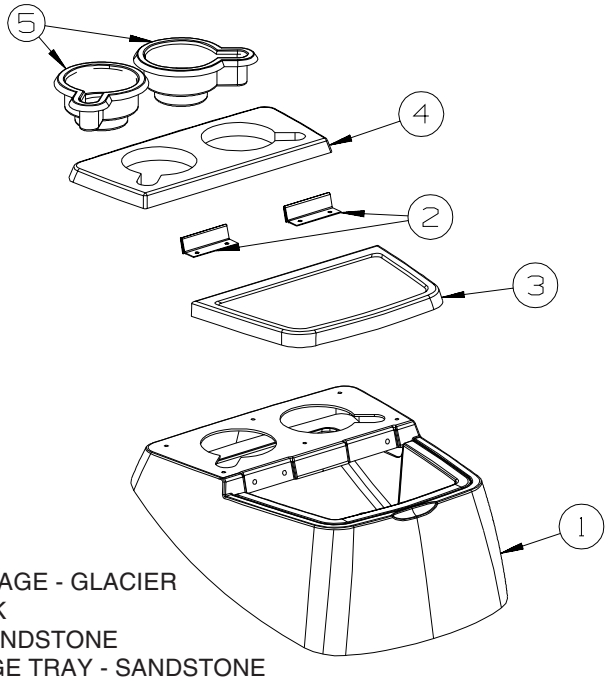

W-SERIES WORKHORSE

KEY	PART NUMBER	U/M	DESCRIPTION
1	139268-01-01A	EA	TRAY - BEVERAGE - GLACIER
2	139279-01-04B	EA	HINGE - BLACK
3	139285-01-03A	EA	LID/DOOR - SANDSTONE
4	139296-01-03A	EA	LID - BEVERAGE TRAY - SANDSTONE
5	133831-01-01A	EA	HOLDER - CUP W/THREE CENTERLINE RUBBER FINGERS

COPYRIGHT © 2007 WINNEBAGO INDUSTRIES INC.

DRIVERS COMPARTMENT GROUP (CONTINUED)

FRONT INTERIOR

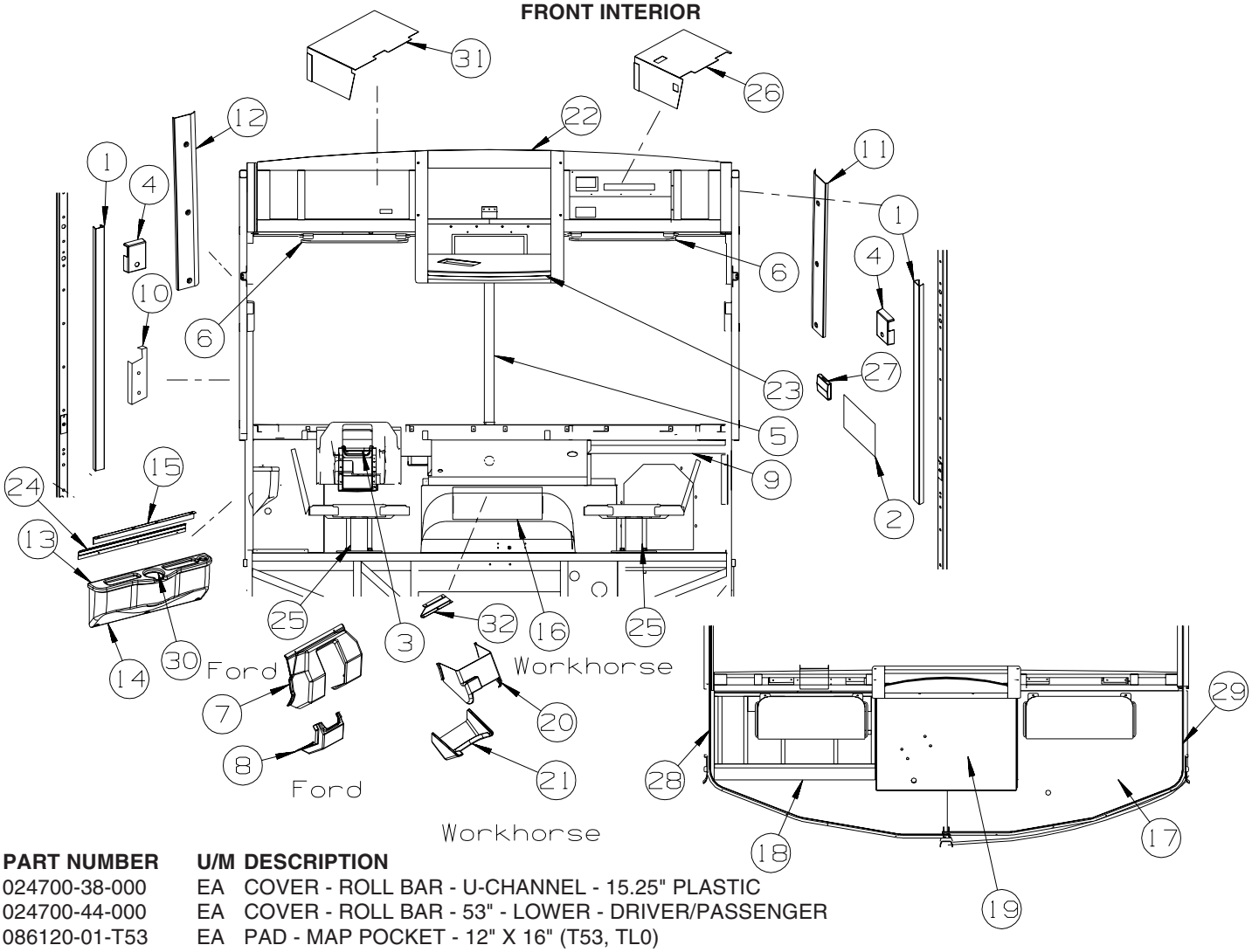

KEY	PART NUMBER	U/M	DESCRIPTION
1	024700-38-000	EA	COVER - ROLL BAR - U-CHANNEL - 15.25" PLASTIC
1	024700-44-000	EA	COVER - ROLL BAR - 53" - LOWER - DRIVER/PASSENGER
2	086120-01-T53	EA	PAD - MAP POCKET - 12" X 16" (T53, TL0)
2	086120-01-T54	EA	PAD - MAP POCKET - 12" X 16" (T54, TL1)
2	086120-01-S30	EA	PAD - MAP POCKET - 12" X 16" (T55, TL2)
2	086120-01-TT0	EA	PAD - MAP POCKET - 12" X 16" (TT0, TT1)
2	086120-01-TT2	EA	PAD - MAP POCKET - 12" X 16" (TT2, TT3)
2	086120-01-TT4	EA	PAD - MAP POCKET - 12" X 16" (TT4, TT5)
2	086120-01-TT6	EA	PAD - MAP POCKET - 12" X 16" (TT6, TT7)
2	086120-01-TT8	EA	PAD - MAP POCKET - 12" X 16" (TT8, TT9)
2	086120-01-TU0	EA	PAD - MAP POCKET - 12" X 16" (TU0, TU1)
2	086120-01-TU2	EA	PAD - MAP POCKET - 12" X 16" (TU2, TU3)
3	103498-09-000	EA	BOOT - STEERING COLUMN - W/1/2 CIRCLE - WORKHORSE
4	103961-03-01A	EA	COVER - BRACKET - SEATBELT/OFF WHITE
5	118452-10-02A	EA	TRIM - WINDSHIELD/CENTER - GLACIER
6	123298-04-05A	EA	SUNVISOR - 10.5" X 21" - DRIVER/PASSENGER - GLACIER
7	131804-01-04A	EA	COVER - STEERING COLUMN - UPPER - GLACIER - FORD
8	125795-01-04A	EA	COVER - STEERING COLUMN/LOWER - GLACIER - FORD
9	126340-05-01A	EA	DECAL - LOGO - SIGHTSEER - 3D - CHAMPAGNE BEIGE
10	127901-01-03A	EA	PANEL - TOEKICK/LEFT HAND - GLACIER
11	136351-03-02A	EA	TRIM - A-PILLAR - INTERIOR/PASSENGER - GLACIER
12	136351-04-02A	EA	TRIM - A-PILLAR - INTERIOR/DRIVER - GLACIER
13	132297-06-04A	EA	PANEL-TRIM - BEVERAGE TRAY
14	132354-05-04A	EA	PANEL/TRIM - INNER - W/O BEVERAGE TRAY - GLACIER
14	132354-06-04A	EA	PANEL/TRIM - INNER - W/O BEVERAGE TRAY - GLACIER - MIRRORS-EXTERIOR W/DEFROST
	142434-01-000	EA	LEVEL - BUBBLE - MOUNTED
	122717-06-01A	FT	PAD - NON-SKID - PSA - 5"W
15	132595-02-02B	EA	ANGLE/SUPPORT/TRIM PANEL - E-COATED
16	126008-02-N21	EA	TRAY - BEVERAGE - W/DOOR - P32 WORKHORSE
16	139275-01-R32	EA	TRAY - BEVERAGE - W/DOOR - W-SERIES WORKHORSE
16	149301-03-S28	EA	TRAY - BEVERAGE - W/CONVENIENCE TRAY - GLACIER - FORD
17	134146-05-S28	EA	PANEL - OVERHEAD/FRONT/BOTTOM/RIGHT HAND

COPYRIGHT © 2007 WINNEBAGO INDUSTRIES INC.

DRIVERS COMPARTMENT GROUP (CONTINUED)

FRONT INTERIOR (CONTINUED)

KEY	PART NUMBER	U/M	DESCRIPTION
18	134146-06-S28	EA	PANEL - OVERHEAD/FRONT/BOTTOM/LEFT HAND
19	P34142-03-S28	EA	COVER - TV - OVERHEAD/BOTTOM - VINYL COVERED
	134142-03-000	EA	COVER - TV - OVERHEAD/BOTTOM
20	137851-01-04A	EA	COVER - STEERING COLUMN - GLACIER - WORKHORSE
21	137878-02-04A	EA	COVER - STEERING COLUMN - FRONT - GLACIER - WORKHORSE
22	144351-03-S28	EA	CABINET - FRAME/TV - W/O DOORS/HARDWARE - PORTSMOUTH OAK FROM: 00-00-00 THRU: 11-30-05
22	144351-06-T53	EA	CABINET - FRAME/TV - W/O DOORS/HARDWARE - PORTSMOUTH OAK FROM: 12-01-05 THRU: 99-99-99
22	144351-03-SJ0	EA	CABINET - FRAME/TV - W/O DOORS/HARDWARE - SIERRA MAPLE FROM: 00-00-00 THRU: 11-30-05
22	144351-06-TL0	EA	CABINET - FRAME/TV - W/O DOORS/HARDWARE - SIERRA MAPLE FROM: 12-01-05 THRU: 99-99-99
23	144278-02-S28	EA	CABINET/BASE - TV - W/O DOORS/HARDWARE - PORTSMOUTH OAK
23	144278-02-SJ0	EA	CABINET/BASE - TV - W/O DOORS/HARDWARE - SIERRA MAPLE
24	130034-11-02B	EA	CLIP - TRIM - E-COATED
25	133408-01-000	EA	PEDESTAL - SEAT - DRIVER/PASSENGER - 9 3/4"
26	136422-03-R28	EA	PANEL - CLOSEOUT
27	118718-01-02A	EA	HOLDER/DRINK - COLLAPSIBLE MUG - WHITE PLASTIC
28	127254-14-03A	EA	TRACK/WRAPAROUND - PASSENGER - GLACIER
29	127254-04-05A	EA	TRACK/WRAPAROUND - DRIVER - GLACIER
30	134566-01-01A	EA	HOLDER - CUP - TWO STEP - BLACK
31	136422-04-R28	EA	PANEL - CLOSEOUT FROM: 00-00-00 THRU: 08-21-05
31	136422-05-T53	EA	PANEL - CLOSEOUT FROM: 08-22-05 THRU: 99-99-99
32	126010-01-03A	EA	SPACER - BEVERAGE TRAY - GLACIER

COPYRIGHT © 2007 WINNEBAGO INDUSTRIES INC.

DRIVERS COMPARTMENT GROUP (CONTINUED)

FRONT INTERIOR (CONTINUED)

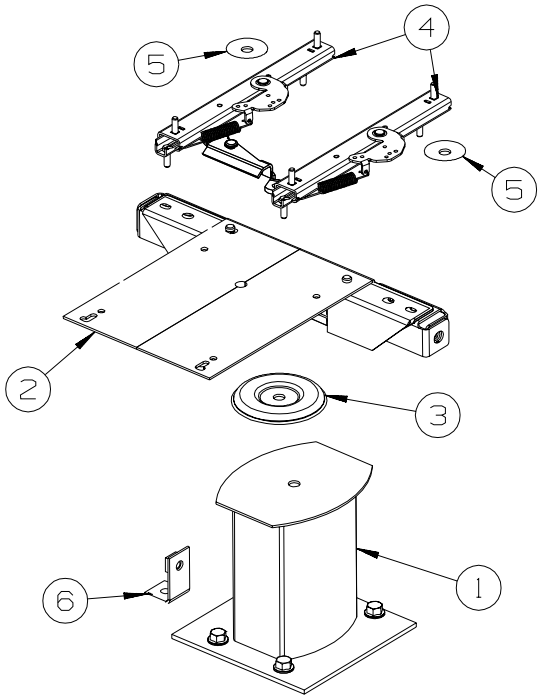

DRIVER

KEY	PART NUMBER	U/M	DESCRIPTION
1	133408-01-000	EA	PEDESTAL - SEAT/DRIVER - 9 3/4"
2	133408-19-000	EA	TOP PLATE - DRIVERS - W/ANCHOR
3	107921-06-000	EA	BEARING KIT - PEDESTAL
4	131566-04-000	EA	SLIDE/SEAT - HEAVY DUTY LOCKING - 5"
	119952-07-000	EA	WIRE - LATCH RELEASE/ROTARY
5	131566-05-000	EA	WASHER - SLIDE SPACER
6	133408-04-000	EA	BRACKET - ANCHOR/FLOOR

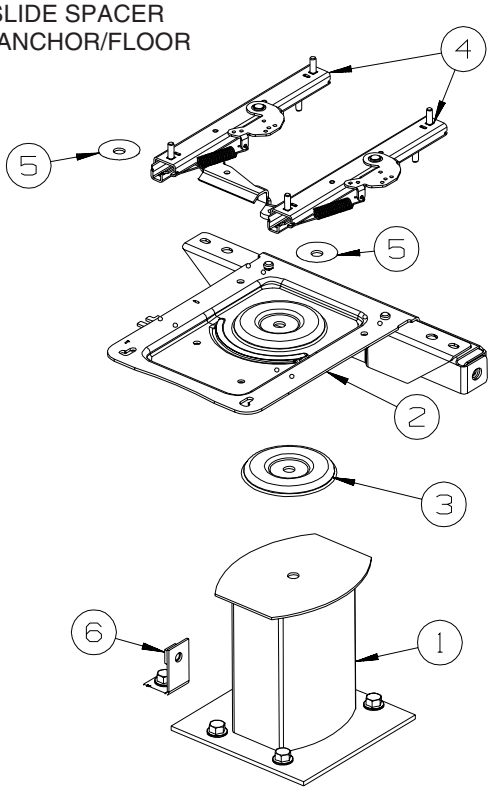

PASSENGER

KEY	PART NUMBER	U/M	DESCRIPTION
1	133408-01-000	EA	PEDESTAL - SEAT - DRIVER/PASSENGER - 9 3/4"
2	133408-20-000	EA	TOP PLATE - PASSENGER - W/ANCHOR
3	107921-06-000	EA	BEARING KIT - PEDESTAL
4	131566-04-000	EA	SLIDE/SEAT - HEAVY DUTY LOCKING - 5"
	119952-07-000	EA	WIRE - LATCH RELEASE/ROTARY
5	131566-05-000	EA	WASHER - SLIDE SPACER
6	133408-04-000	EA	BRACKET - ANCHOR/FLOOR

COPYRIGHT © 2007 WINNEBAGO INDUSTRIES INC.

DRIVERS COMPARTMENT GROUP (CONTINUED)

FRONT INTERIOR (CONTINUED)

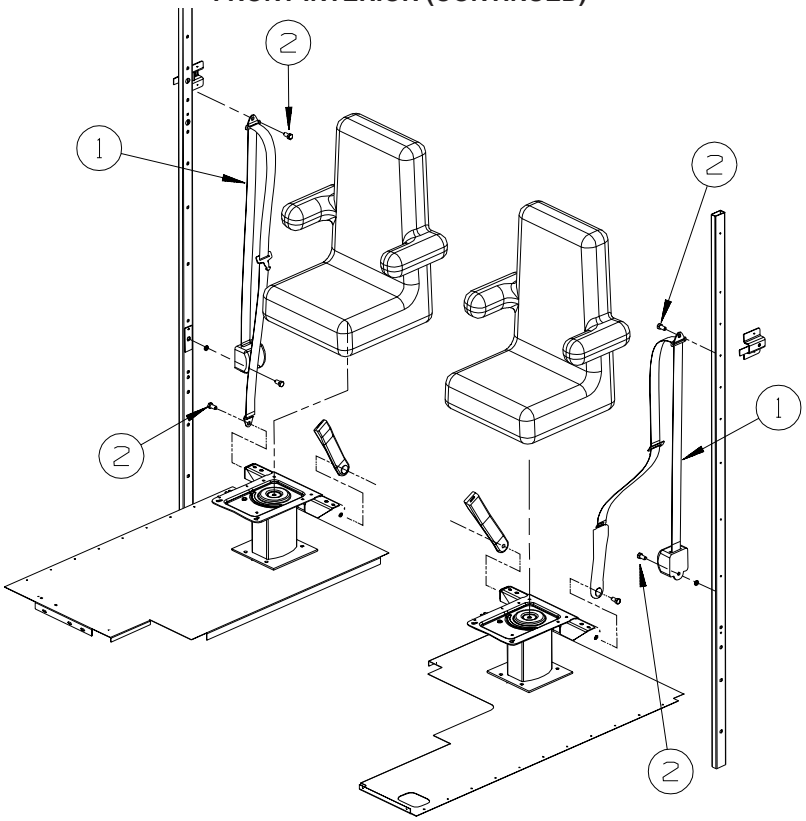

KEY	PART NUMBER	U/M	DESCRIPTION
1*	091990-04-01A	EA	SEAT BELT/SHOULDER HARNESS - DRIVERS/PASSENGER - BLACK
2	109146-01-000	EA	BOLT - SHOULDER/SEAT BELT

***COMPONENT PARTS LISTED LATER IN THIS GROUP**

COMPONENT PARTS FOR FRONT INTERIOR

091990-04-01A

KEY	PART NUMBER	U/M	DESCRIPTION	VENDOR NO.
	091990-01-701	EA	EXTENDER 9" FOR A8408 3 PT	I-1331-02
	091990-01-703	EA	RECEIVER/FEMALE END-SEATBELT	I-1159-02
	091990-05-700	EA	SLEEVE/BUCKLE COVER-PLASTIC	209S-2
	091990-05-701	EA	CAP/COVER - BOLT HOLE COVER	209SC-02
	091990-05-702	EA	SLEEVE/RETRACTABLE COVER	309C-02
	091990-05-703	EA	EXTENDER 12"	I-1442-02

COPYRIGHT © 2007 WINNEBAGO INDUSTRIES INC.

DRIVERS COMPARTMENT GROUP (CONTINUED)

CABINETS

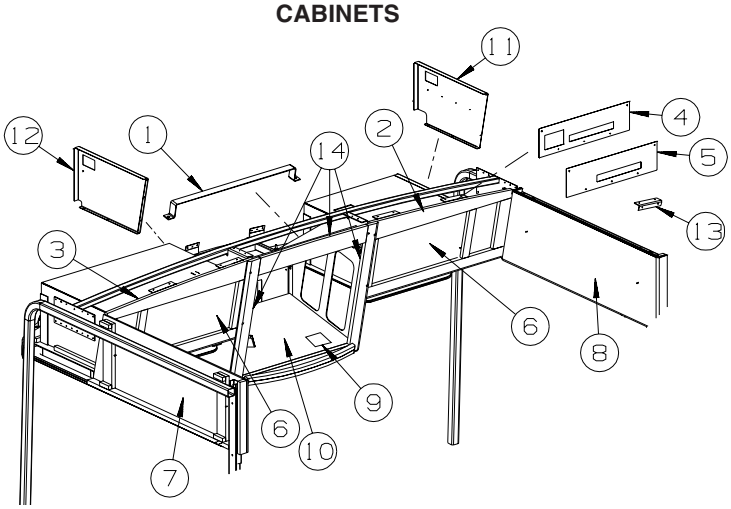

KEY	PART NUMBER	U/M	DESCRIPTION
1	133790-20-02B	EA	STRAP - TIEDOWN - TV - E-COATED
2	148442-01-T53	EA	CABINET - OVHD/FRONT/RIGHT HAND - W/O DOORS/HDW - PORTSMOUTH OAK (T53)
2	148442-01-T54	EA	CABINET - OVHD/FRONT/RIGHT HAND - W/O DOORS/HDW - PORTSMOUTH OAK (T54)
2	148442-01-S30	EA	CABINET - OVHD/FRONT/RIGHT HAND - W/O DOORS/HDW - PORTSMOUTH OAK (T55)
2	148442-01-TL0	EA	CABINET - OVHD/FRONT/RIGHT HAND - W/O DOORS/HDW - SIERRA MAPLE (TL0)
2	148442-01-TL1	EA	CABINET - OVHD/FRONT/RIGHT HAND - W/O DOORS/HDW - SIERRA MAPLE (TL1)
2	148442-01-SJ2	EA	CABINET - OVHD/FRONT/RIGHT HAND - W/O DOORS/HDW - SIERRA MAPLE (TL2)
2	148442-01-TT0	EA	CABINET - OVHD/FRONT/RIGHT HAND - W/O DOORS/HDW - PORTSMOUTH OAK (TT0)
2	148442-01-TT1	EA	CABINET - OVHD/FRONT/RIGHT HAND - W/O DOORS/HDW - SIERRA MAPLE (TT1)
2	148442-01-TT2	EA	CABINET - OVHD/FRONT/RIGHT HAND - W/O DOORS/HDW - PORTSMOUTH OAK (TT2)
2	148442-01-TT3	EA	CABINET - OVHD/FRONT/RIGHT HAND - W/O DOORS/HDW - SIERRA MAPLE (TT3)
2	148442-01-TT4	EA	CABINET - OVHD/FRONT/RIGHT HAND - W/O DOORS/HDW - PORTSMOUTH OAK (TT4)
2	148442-01-TT5	EA	CABINET - OVHD/FRONT/RIGHT HAND - W/O DOORS/HDW - SIERRA MAPLE (TT5)
2	148442-01-TT6	EA	CABINET - OVHD/FRONT/RIGHT HAND - W/O DOORS/HDW - PORTSMOUTH OAK (TT6)
2	148442-01-TT7	EA	CABINET - OVHD/FRONT/RIGHT HAND - W/O DOORS/HDW - SIERRA MAPLE (TT7)
2	148442-01-TT8	EA	CABINET - OVHD/FRONT/RIGHT HAND - W/O DOORS/HDW - PORTSMOUTH OAK (TT8)
2	148442-01-TT9	EA	CABINET - OVHD/FRONT/RIGHT HAND - W/O DOORS/HDW - SIERRA MAPLE (TT9)
2	148442-01-TU0	EA	CABINET - OVHD/FRONT/RIGHT HAND - W/O DOORS/HDW - PORTSMOUTH OAK (TU0)
2	148442-01-TU1	EA	CABINET - OVHD/FRONT/RIGHT HAND - W/O DOORS/HDW - SIERRA MAPLE (TU1)
2	148442-01-TU2	EA	CABINET - OVHD/FRONT/RIGHT HAND - W/O DOORS/HDW - PORTSMOUTH OAK (TU2)
2	148442-01-TU3	EA	CABINET - OVHD/FRONT/RIGHT HAND - W/O DOORS/HDW - SIERRA MAPLE (TU3)
3	148442-02-T53	EA	CABINET - OVHD/FRONT/LEFT HAND - W/O DOORS/HDW - PORTSMOUTH OAK (T53)
3	148442-02-T54	EA	CABINET - OVHD/FRONT/LEFT HAND - W/O DOORS/HDW - PORTSMOUTH OAK (T54)
3	148442-02-S30	EA	CABINET - OVHD/FRONT/LEFT HAND - W/O DOORS/HDW - PORTSMOUTH OAK (T55)
3	148442-02-TL0	EA	CABINET - OVHD/FRONT/LEFT HAND - W/O DOORS/HDW - SIERRA MAPLE (TL0)
3	148442-02-TL1	EA	CABINET - OVHD/FRONT/LEFT HAND - W/O DOORS/HDW - SIERRA MAPLE (TL1)
3	148442-02-SJ2	EA	CABINET - OVHD/FRONT/LEFT HAND - W/O DOORS/HDW - SIERRA MAPLE (TL2)
3	148442-02-TT0	EA	CABINET - OVHD/FRONT/LEFT HAND - W/O DOORS/HDW - PORTSMOUTH OAK (TT0)
3	148442-02-TT1	EA	CABINET - OVHD/FRONT/LEFT HAND - W/O DOORS/HDW - SIERRA MAPLE (TT1)
3	148442-02-TT2	EA	CABINET - OVHD/FRONT/LEFT HAND - W/O DOORS/HDW - PORTSMOUTH OAK (TT2)
3	148442-02-TT3	EA	CABINET - OVHD/FRONT/LEFT HAND - W/O DOORS/HDW - SIERRA MAPLE (TT3)
3	148442-02-TT4	EA	CABINET - OVHD/FRONT/LEFT HAND - W/O DOORS/HDW - PORTSMOUTH OAK (TT4)
3	148442-02-TT5	EA	CABINET - OVHD/FRONT/LEFT HAND - W/O DOORS/HDW - SIERRA MAPLE (TT5)
3	148442-02-TT6	EA	CABINET - OVHD/FRONT/LEFT HAND - W/O DOORS/HDW - PORTSMOUTH OAK (TT6)
3	148442-02-TT7	EA	CABINET - OVHD/FRONT/LEFT HAND - W/O DOORS/HDW - SIERRA MAPLE (TT7)
3	148442-02-TT8	EA	CABINET - OVHD/FRONT/LEFT HAND - W/O DOORS/HDW - PORTSMOUTH OAK (TT8)
3	148442-02-TT9	EA	CABINET - OVHD/FRONT/LEFT HAND - W/O DOORS/HDW - SIERRA MAPLE (TT9)
3	148442-02-TU0	EA	CABINET - OVHD/FRONT/LEFT HAND - W/O DOORS/HDW - PORTSMOUTH OAK (TU0)
3	148442-02-TU1	EA	CABINET - OVHD/FRONT/LEFT HAND - W/O DOORS/HDW - SIERRA MAPLE (TU1)
3	148442-02-TU2	EA	CABINET - OVHD/FRONT/LEFT HAND - W/O DOORS/HDW - PORTSMOUTH OAK (TU2)
3	148442-02-TU3	EA	CABINET - OVHD/FRONT/LEFT HAND - W/O DOORS/HDW - SIERRA MAPLE (TU3)
4	144923-04-S28	EA	PANEL/SHELF - W/CUTOUTS F/VIDEO/INVERTER- VINYL COVERED - INVERTER-DC/AC, 300 WATT
5	144923-03-S28	EA	PANEL/SHELF - W/CUTOUTS - VINYL COVERED - INVERTER/CHARGER-DC/AC W/O
6	146028-54-T53	EA	DOOR - GLASS INSERT/OGEE EDGE - 12" X 21.8" - W/O HDW - PORTSMOUTH OAK
6	146028-54-TL0	EA	DOOR - GLASS INSERT/OGEE EDGE - 12" X 21.8" - W/O HDW - SIERRA MAPLE
7	138258-13-P31	EA	PANEL - FRONT/OVHD - LEFT HAND
8	138258-12-R65	EA	PANEL - FRONT/OVHD - RIGHT HAND
9	140364-01-01A	EA	FOAM - PAD - .5" X 8" X 8"

COPYRIGHT © 2007 WINNEBAGO INDUSTRIES INC.

DRIVERS COMPARTMENT GROUP (CONTINUED)

CABINETS (CONTINUED)

KEY	PART NUMBER	U/M	DESCRIPTION
10	091261-01-000	FT	SLIPNOT - ANTISLIP - 1' WIDE X 12' - BLACK
10	123816-01-000	FT	TAPE - DOUBLE SIDED - 1" X .020" X 200'
11	134147-04-02B	EA	PANEL/SHELF - RIGHT HAND - E-COATED
12	134147-03-02B	EA	PANEL/SHELF - RIGHT HAND - E-COATED
			FROM: 00-00-00 THRU: 08-21-05
12	134147-05-02B	EA	PANEL/SHELF - RIGHT HAND - E-COATED
			FROM: 08-22-05 THRU: 99-99-99
13	155345-01-02B	EA	BRACKET/SUPPORT - E-COATED
14	127842-01-01A	EA	SEAL - SIGHT SHIELD - 2" BLACK

COPYRIGHT © 2007 WINNEBAGO INDUSTRIES INC.

ELECTRICAL GROUP

110V BODY WIRING

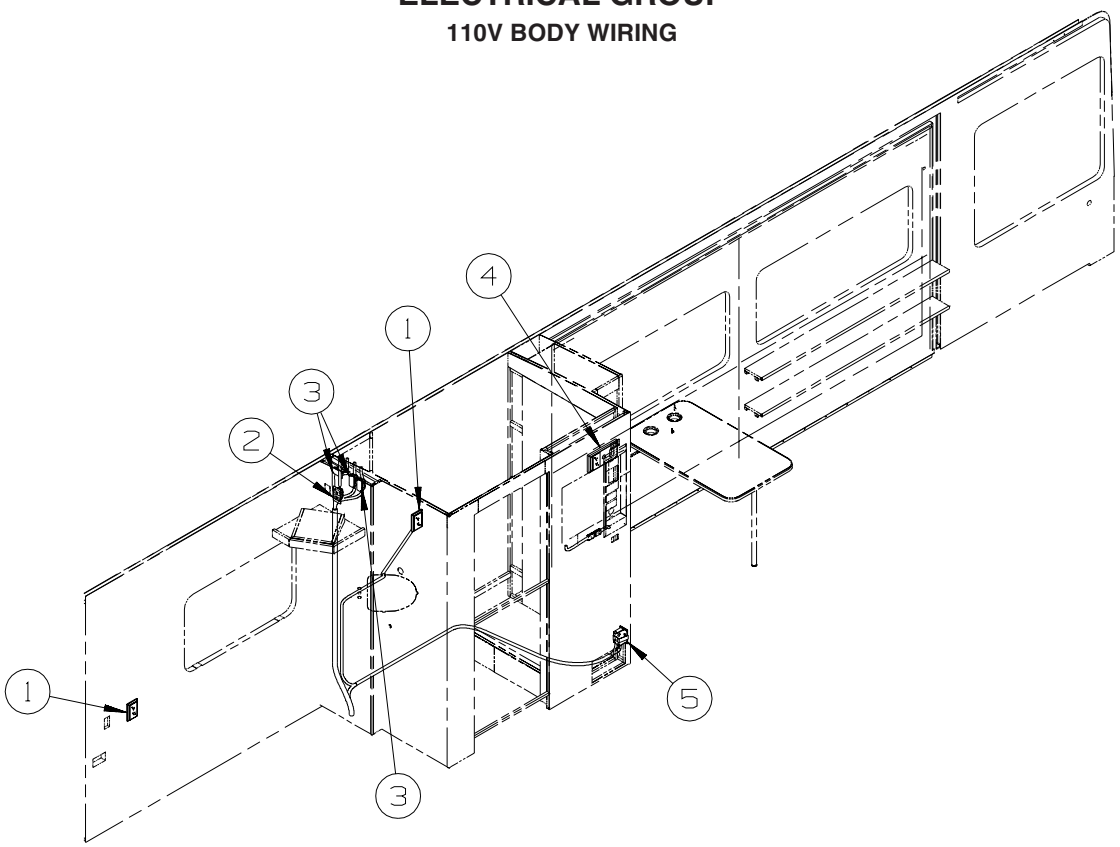

KEY	PART NUMBER	U/M	DESCRIPTION
1	058708-06-000	EA	RECEPTACLE - DUPLEX - WHITE
1	058708-01-000	EA	RECEPTACLE - ELECTRIC - DOUBLE - BROWN
1	133713-01-20A	EA	SPACER/RECEPTACLE - WHITE VINYL
1	133713-01-08A	EA	SPACER/RECEPTACLE - VINYL - PORTSMOUTH OAK
1	133713-01-22A	EA	SPACER/RECEPTACLE - VINYL - SIERRA MAPLE
2	058708-06-000	EA	RECEPTACLE - DUPLEX - WHITE
2	058708-01-000	EA	RECEPTACLE - ELECTRIC - DOUBLE - BROWN
3	058707-02-000	EA	RECEPTACLE - BLANK - JUNCTION BOX
4	058708-06-000	EA	RECEPTACLE - DUPLEX - WHITE
4	058708-01-000	EA	RECEPTACLE - ELECTRIC - DOUBLE - BROWN
4	133713-06-20A	EA	SPACER/RECEPTACLE - PHONE - VINYL - WHITE
4	133713-06-08A	EA	SPACER/RECEPTACLE - PHONE - VINYL - PORTSMOUTH OAK
4	133713-06-22A	EA	SPACER/RECEPTACLE - PHONE - VINYL - SIERRA MAPLE
5	147446-01-02A	EA	RECEPTACLE - GFCI - 15A 125V - BROWN
5	147450-01-02A	EA	PLATE - ELECTRICAL OUTLET - BROWN

COPYRIGHT © 2007 WINNEBAGO INDUSTRIES INC.

ELECTRICAL GROUP (CONTINUED)

110V BODY WIRING (CONTINUED)

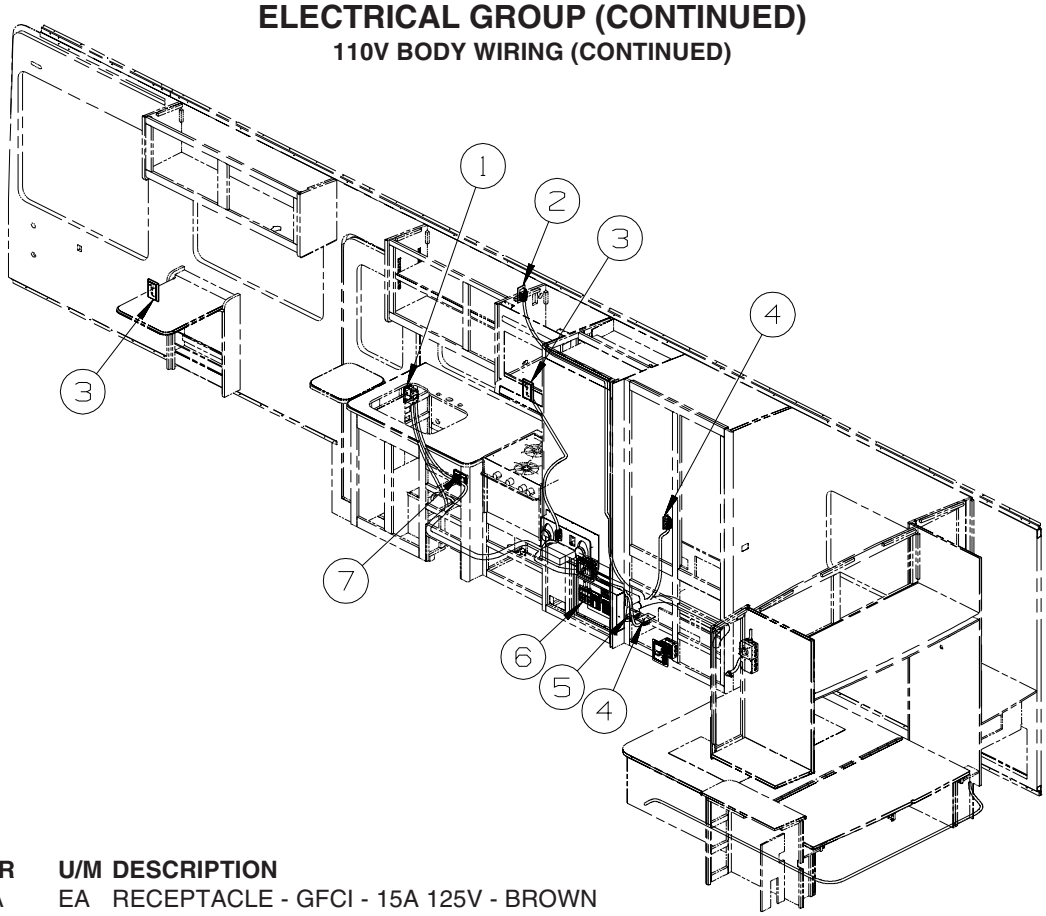

KEY	PART NUMBER	U/M	DESCRIPTION
1	147446-01-02A	EA	RECEPTACLE - GFCI - 15A 125V - BROWN
1	147450-01-02A	EA	PLATE - ELECTRICAL OUTLET - BROWN
2	058708-07-000	EA	RECEPTACLE - ELECTRICAL - SINGLE - WHITE
2	058708-05-000	EA	RECEPTACLE - ELECTRIC - SINGLE - BROWN
3	058708-06-000	EA	RECEPTACLE - DUPLEX - WHITE
3	058708-01-000	EA	RECEPTACLE - ELECTRIC - DOUBLE - BROWN
3	133713-01-20A	EA	SPACER/RECEPTACLE - WHITE VINYL
3	133713-01-08A	EA	SPACER/RECEPTACLE - VINYL - PORTSMOUTH OAK
3	133713-01-22A	EA	SPACER/RECEPTACLE - VINYL - SIERRA MAPLE
4	058707-01-000	EA	RECEPTACLE - ELECTRIC - SINGLE - BROWN
5	058707-02-000	EA	RECEPTACLE - BLANK - JUNCTION BOX
6	095721-31-000	EA	LABEL - CONTROL CENTER - 30 AMP - US
7	131826-01-01A	EA	RECEPTACLE - EXTERIOR - W/COVER/GASKET - WHITE

COPYRIGHT © 2007 WINNEBAGO INDUSTRIES INC.

ELECTRICAL GROUP (CONTINUED)

12V BODY WIRING

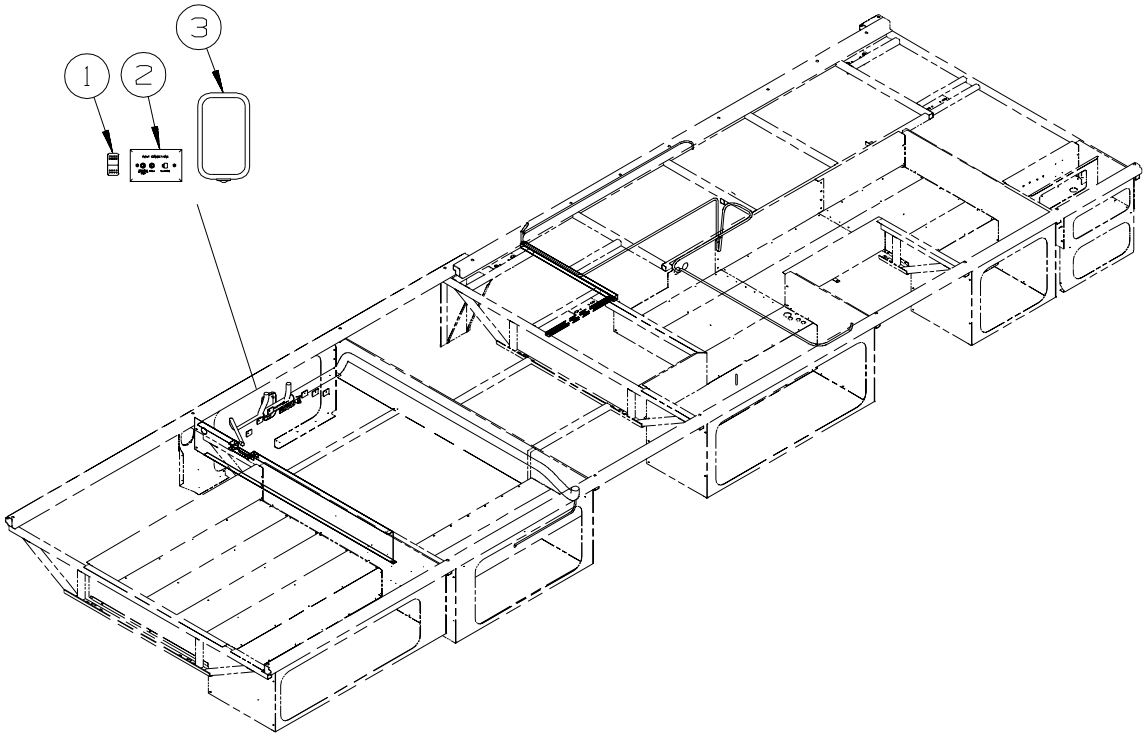

KEY	PART NUMBER	U/M	DESCRIPTION
1	108357-15-000	EA	SWITCH - ROCKER - DPDT - ON/NONE/ON - LIGHTED
1	108356-04-01A	EA	COVER/ACTUATOR SWITCH - 2 ROWS DIMPLES W/LENS-CONTURA-BLK
1	108355-01-000	EA	HOUSING - SWITCH
2	149557-02-01A	EA	PLATE/WALL - PHONE/DUAL COAXIAL/HORIZONTAL - WHITE
3*	137417-01-01A	EA	LIGHT - DOME - SINGLE - W/SWITCH/FROSTED LENS - WHITE

***COMPONENT PARTS LISTED LATER IN THIS GROUP**

COPYRIGHT © 2007 WINNEBAGO INDUSTRIES INC.

ELECTRICAL GROUP (CONTINUED)

12V BODY WIRING (CONTINUED)

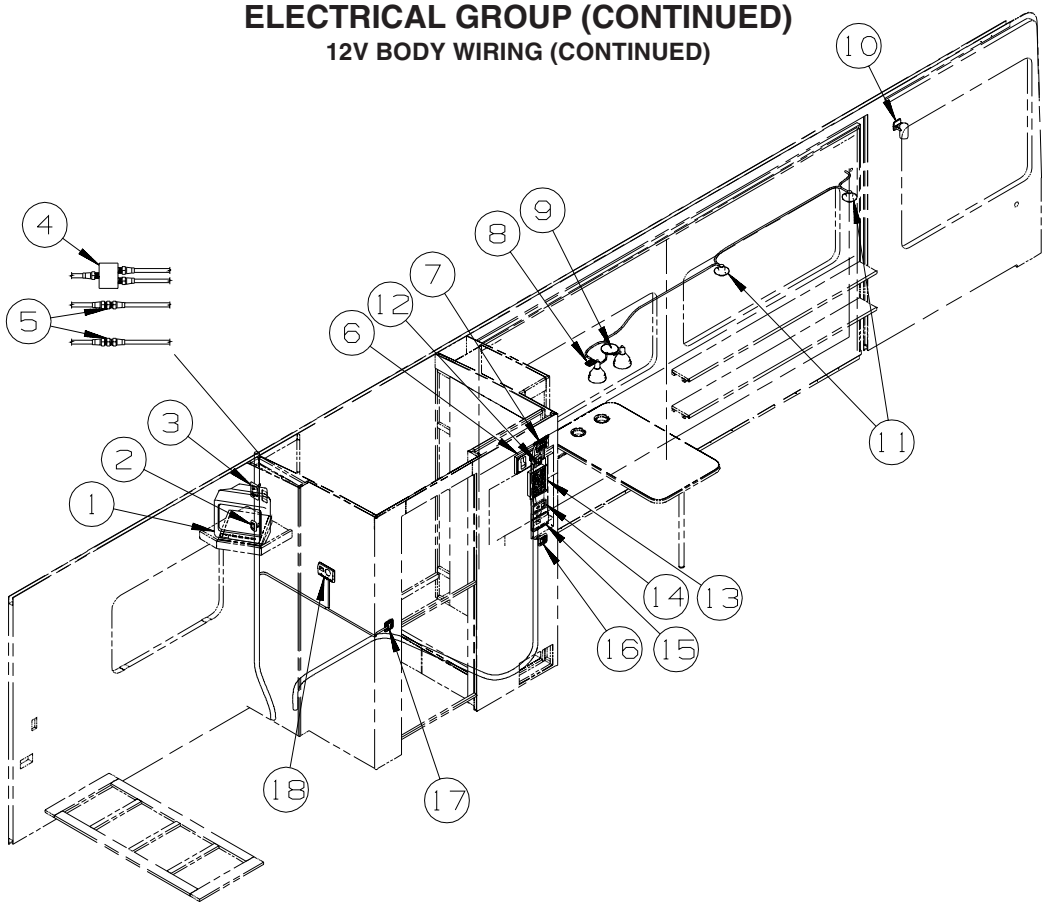

KEY	PART NUMBER	U/M	DESCRIPTION
1*	086231-10-000	EA	TV - 13" COLOR - AUDIOVOX - FLEX VISION/AVT-1498/DC - TV REAR
1	144819-01-02B	EA	BRACKET - TV - E-COATED - TV REAR
2	135740-01-02A	EA	SWITCH - ROCKER - SPST - ON/OFF - WHITE
2	135740-01-01A	EA	SWITCH - ROCKER - SPST - ON/OFF - BROWN
2	135741-01-02A	EA	SWITCH - BASE - SINGLE - WHITE
2	135741-01-01A	EA	SWITCH - BASE - SINGLE - BROWN
2	135742-45-01A	EA	BEZEL - SWITCH - TV - WHITE
2	135742-45-02A	EA	BEZEL - SWITCH - TV - BROWN
3	076319-27-000	EA	WALLPLATE/RECEPTACLE - WHITE
4	082134-01-000	EA	ADAPTER - TV - CABLE TO CABLE
4	086756-01-000	EA	SPLITTER - TV/2 WAY - ENTERTAINMENT CENTER/ EXT. W/CD
5	082134-01-000	EA	ADAPTER - TV - CABLE TO CABLE
6	093253-01-03A	EA	PLATE - WALL - TELEPHONE - WHITE
6	093253-01-02A	EA	PLATE - WALL - TELEPHONE - BROWN
6	132958-01-000	EA	RECEPTACLE - 12 VOLT - MOUNTING FLANGE - BLACK
7	138173-04-000	EA	CONTROL PANEL (TOUCH PAD) - ELECTRIC SLIDEOUT - #1802931
7	116549-01-000	EA	LABEL - WARNING - SLIDEOUT
8	135740-01-02A	EA	SWITCH - ROCKER - SPST - ON/OFF - WHITE
8	135740-01-01A	EA	SWITCH - ROCKER - SPST - ON/OFF - BROWN
8	135741-01-02A	EA	SWITCH - BASE - SINGLE - WHITE
8	135741-01-01A	EA	SWITCH - BASE - SINGLE - BROWN
8	135742-01-02A	EA	BEZEL - SWITCH - SINGLE - WHITE
8	135742-01-01A	EA	BEZEL - SWITCH - SINGLE - BROWN
9	093575-37-01A	EA	LIGHT - CEILING/DOUBLE - SATIN NICKEL
9	117805-01-000	EA	BULB - 12V - #921F - 1.4 AMPS
10	149590-01-02A	EA	LIGHT - READING/SWIVEL - W/O SWITCH - NICKEL
11	132427-01-02A	EA	LIGHT - READING/SWIVEL - ROUND - NICKEL
	123917-01-000	EA	BULB - 12V - HALOGEN SPOT

COPYRIGHT © 2007 WINNEBAGO INDUSTRIES INC.

ELECTRICAL GROUP (CONTINUED)

12V BODY WIRING (CONTINUED)

KEY	PART NUMBER	U/M	DESCRIPTION
12	135740-06-01A	EA	SWITCH - ROCKER - ON/OFF - LIGHTED - RED - WTR HTR-6GAL/110/LP/MTR/AUTO
12	135741-01-02A	EA	SWITCH - BASE - SINGLE - WHITE - WTR HTR-6GAL/110/LP/MTR/AUTO
12	135741-01-01A	EA	SWITCH - BASE - SINGLE - BROWN - WTR HTR-6GAL/110/LP/MTR/AUTO
12	135742-35-01A	EA	BEZEL - SWITCH - WATER HEATER/110 VOLT - WHITE - WTR HTR-6GAL/110/LP/MTR/AUTO
12	135742-35-02A	EA	BEZEL - SWITCH - WATER HEATER/110 VOLT - BROWN - WTR HTR-6GAL/110/LP/MTR/AUTO
13*	134940-06-01A	EA	PANEL - MONITOR - 2 TANK - W/GENERATOR SWITCH
14	127002-10-000	EA	PANEL/MONITOR - ENERGY MANAGEMENT SYSTEMS CTRL - W/3 PLUG
15	135618-01-01A	EA	THERMOSTAT - HEAT PUMP/FURNACE - WHITE - AC HEAT PUMP-2 HI EFFICIENCY
15	135618-03-01A	EA	THERMOSTAT - ROOF A/C & FURNACE - WHITE - A/C ROOF-HI EFF (2) W/EMS
16	135740-01-02A	EA	SWITCH - ROCKER - SPST - ON/OFF - WHITE - CEILING
16	135740-01-01A	EA	SWITCH - ROCKER - SPST - ON/OFF - BROWN - CEILING
16	135740-02-02A	EA	SWITCH - ROCKER - SPDT - ON/ON - WHITE - HALL
16	135740-02-01A	EA	SWITCH - ROCKER - SPDT - ON/ON - BROWN - HALL
16	135741-02-02A	EA	SWITCH - BASE - DOUBLE - WHITE
16	135741-02-01A	EA	SWITCH - BASE - DOUBLE - BROWN
16	135742-16-01A	EA	BEZEL - SWITCH - CEILING/HALL - WHITE
16	135742-16-02A	EA	BEZEL - SWITCH - CEILING/HALL - BROWN
17	135740-01-02A	EA	SWITCH - ROCKER - SPST - ON/OFF - WHITE
17	135740-01-01A	EA	SWITCH - ROCKER - SPST - ON/OFF - BROWN
17	135741-02-02A	EA	SWITCH - BASE - DOUBLE - WHITE
17	135741-02-01A	EA	SWITCH - BASE - DOUBLE - BROWN
17	135742-15-01A	EA	BEZEL - SWITCH - CEILING/SHOWER - WHITE
17	135742-15-02A	EA	BEZEL - SWITCH - CEILING/SHOWER - BROWN
18	135618-04-01A	EA	THERMOSTAT - ROOF A/C ONLY - WHITE
18	135618-03-01A	EA	THERMOSTAT - ROOF A/C & FURNACE - WHITE

***COMPONENT PARTS LISTED LATER IN THIS GROUP**

COPYRIGHT © 2007 WINNEBAGO INDUSTRIES INC.

ELECTRICAL GROUP (CONTINUED)

12V BODY WIRING (CONTINUED)

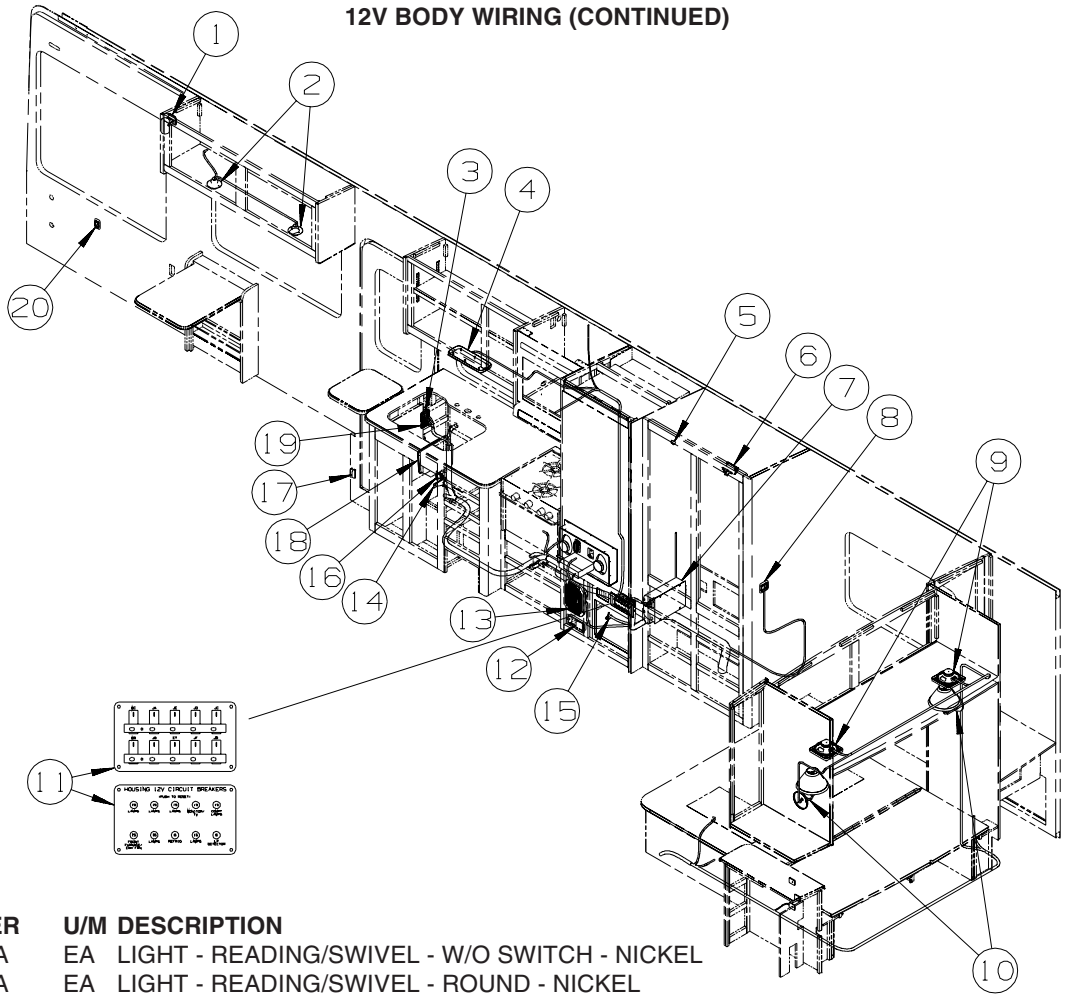

KEY	PART NUMBER	U/M	DESCRIPTION
1	149590-01-02A	EA	LIGHT - READING/SWIVEL - W/O SWITCH - NICKEL
2	132427-01-02A	EA	LIGHT - READING/SWIVEL - ROUND - NICKEL
	123917-01-000	EA	BULB - 12V - HALOGEN SPOT
3	135740-01-02A	EA	SWITCH - ROCKER - SPST - ON/OFF - WHITE
3	135740-01-01A	EA	SWITCH - ROCKER - SPST - ON/OFF - BROWN
3	135741-02-02A	EA	SWITCH - BASE - DOUBLE - WHITE
3	135741-02-01A	EA	SWITCH - BASE - DOUBLE - BROWN
3	135742-19-01A	EA	BEZEL - SWITCH - CEILING/PORCH - WHITE
3	135742-19-02A	EA	BEZEL - SWITCH - CEILING/PORCH - BROWN
4*	137417-05-01A	EA	LIGHT - DOME - DOUBLE - W/SWITCH/OPTIC LENS - WHITE
5	056264-01-000	EA	SWITCH - LEAF ACTUATOR
6*	087694-01-000	EA	LIGHT - WARDROBE/CLOSET - W/SWITCH
7	123058-02-000	EA	CONVERTER - 45 AMP - ELECTRONIC - 4 1/8"H X 7"W X 12 3/8"L
8	135740-01-02A	EA	SWITCH - ROCKER - SPST - ON/OFF - WHITE - CEILING
8	135740-01-01A	EA	SWITCH - ROCKER - SPST - ON/OFF - BROWN - CEILING
8	135740-02-02A	EA	SWITCH - ROCKER - SPDT - ON/ON - WHITE - HALL
8	135740-02-01A	EA	SWITCH - ROCKER - SPDT - ON/ON - BROWN - HALL
8	135741-02-02A	EA	SWITCH - BASE - DOUBLE - WHITE
8	135741-02-01A	EA	SWITCH - BASE - DOUBLE - BROWN
8	135742-16-01A	EA	BEZEL - SWITCH - CEILING/HALL - WHITE
8	135742-16-02A	EA	BEZEL - SWITCH - CEILING/HALL - BROWN
9	094097-01-000	EA	SPEAKER - RADIO/TV - W/O GRILLE - 5.25" DIAMETER
9	089340-02-000	EA	GRILLE - SPEAKER - 6.5" SQUARE
10	119258-47-01A	EA	LAMP - WALL - UL/CSA - SATIN NICKEL
10	119257-15-01A	EA	SHADE - LAMP - LINEN SILKARA
10	067479-01-000	EA	BULB - 12V - #1076 - 1.80 AMP
11	092547-06-000	EA	LABEL - CIRCUIT BREAKER
11	139067-01-02B	EA	PLATE - CIRCUIT BREAKER/HOUSE - E-COATED

COPYRIGHT © 2007 WINNEBAGO INDUSTRIES INC.

ELECTRICAL GROUP (CONTINUED)

12V BODY WIRING (CONTINUED)

KEY	PART NUMBER	U/M	DESCRIPTION
12	150138-01-01A	EA	DETECTOR - LP GAS - WHITE
12	150138-01-02A	EA	DETECTOR - LP GAS - BROWN
13	150090-01-000	EA	SPEAKER - 6" X 9" - SUB-WOOFER - MAGNADYNE LS69W - HOME THEATER SOUND SYSTEM
13	151569-01-01A	EA	GRILLE - SPEAKER - 6" X 9" - SUB WOOFER - BLACK - HOME THEATER SOUND SYSTEM
14	061424-01-000	EA	LIGHT - AISLE - 12 VOLT - RECTANGULAR
15	086233-01-000	EA	STUD - ISOLATED - 3/8" X 7/8" LONG
16	108357-06-000	EA	SWITCH - ROCKER - DPDT - MOM/OFF/MOM - 6 TERM - W/O COVER
16	108356-11-01A	EA	COVER/ACTUATOR SWITCH - 3 GROOVES - AUX BATT - BLACK
16	098351-07-02A	EA	PLATE/SWITCH - 1 GANG - CHROME - GENERATOR SWITCH
16	108355-01-000	EA	HOUSING - SWITCH
17	116995-02-000	EA	SWITCH/MAGNET - ELECTRIC STEP - BLACK/WHITE-CLOSED CIRCUIT
18	141679-03-000	EA	CHARGER/DOCK STATION ONLY - FOR #GMRS100 TWO-WAY RADIO
18	141679-04-000	EA	RADIO/TWO-WAY W/BATTERY (EACH = 1) - 5 MILE - ASA GMRS100 FROM: 00-00-00 THRU: 12-04-05
18	141679-05-000	EA	RADIO/TWO-WAY W/BATTERY (EACH = 1) - 9 MILE - ASA GMRS200 FROM: 12-05-05 THRU: 99-99-99
19	135740-01-02A	EA	SWITCH - ROCKER - SPST - ON/OFF - WHITE
19	135740-01-01A	EA	SWITCH - ROCKER - SPST - ON/OFF - BROWN
19	135741-01-02A	EA	SWITCH - BASE - SINGLE - WHITE
19	135741-01-01A	EA	SWITCH - BASE - SINGLE - BROWN
19	135742-11-01A	EA	BEZEL - SWITCH - STEP - WHITE
19	135742-11-02A	EA	BEZEL - SWITCH - STEP - BROWN
20	135740-01-02A	EA	SWITCH - ROCKER - SPST - ON/OFF - WHITE
20	135740-01-01A	EA	SWITCH - ROCKER - SPST - ON/OFF - BROWN
20	135741-01-02A	EA	SWITCH - BASE - SINGLE - WHITE
20	135741-01-01A	EA	SWITCH - BASE - SINGLE - BROWN
20	135742-01-02A	EA	BEZEL - SWITCH - SINGLE - WHITE
20	135742-01-01A	EA	BEZEL - SWITCH - SINGLE - BROWN

***COMPONENT PARTS LISTED LATER IN THIS GROUP**

COPYRIGHT © 2007 WINNEBAGO INDUSTRIES INC.

ELECTRICAL GROUP (CONTINUED)

12V BODY WIRING (CONTINUED)

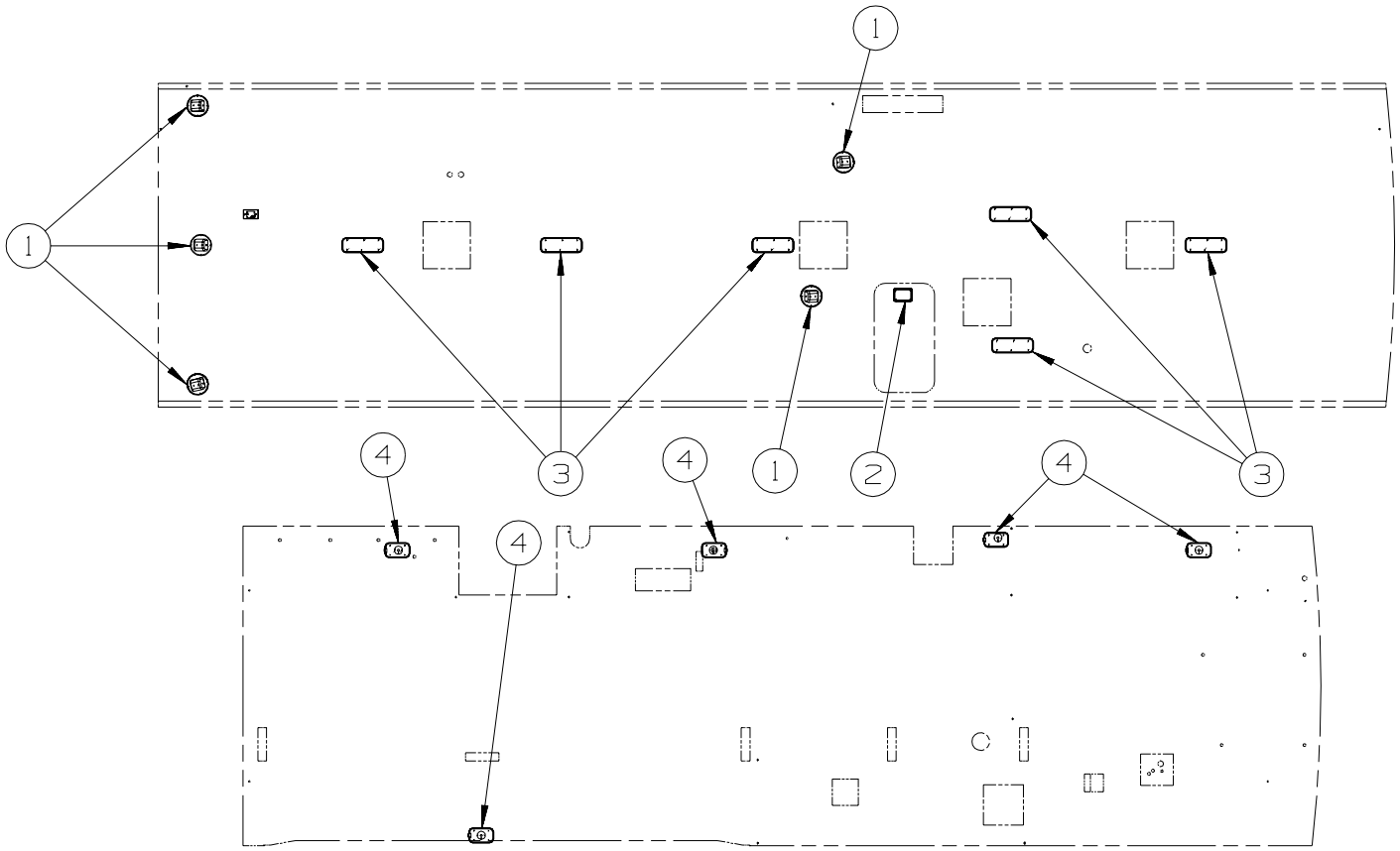

KEY	PART NUMBER	U/M	DESCRIPTION
1	151314-01-01A	EA	SPEAKER - CUBE/CEILING - WHITE - MAGNADYNE - LS3CM-WN - HOME THEATER SOUND SYSTEM
2*	121935-01-01A	EA	LIGHT - DOME - SHOWER
3*	137417-06-01A	EA	LIGHT - DOME - DOUBLE - W/O SWITCH - W/FROSTED LENS-WHITE
4*	137417-01-01A	EA	LIGHT - DOME - SINGLE - W/SWITCH/FROSTED LENS - WHITE

***COMPONENT PARTS LISTED LATER IN THIS GROUP**

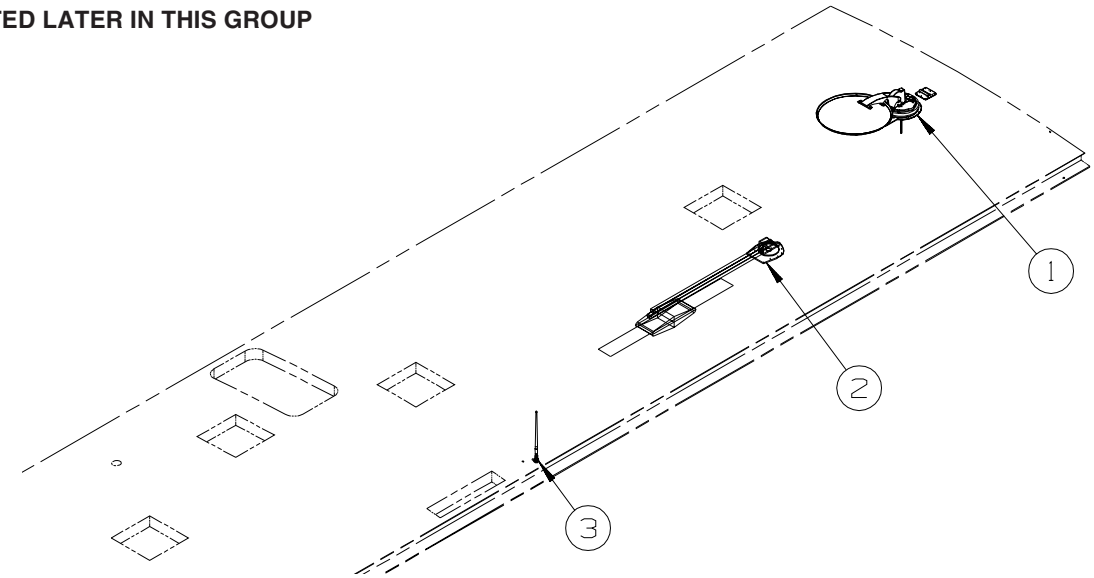

KEY	PART NUMBER	U/M	DESCRIPTION
1*	137135-02-000	EA	ANTENNA - SATELLITE DSS - W/SENSOR
2*	076319-23-000	EA	ANTENNA - TV ROOF MOUNT - 44.5" MAST
2*	076319-25-000	EA	KIT - HARDWARE INTERIOR
2	069726-02-000	EA	BUMPER - .88" OD X .40" THICK - BLACK
3	090944-01-000	EA	ANTENNA - RADIO - 16" RUBBER - W/72" LEAD WIRE - ENTERTAINMENT CENTER/EXT W/CD
3	109889-04-000	EA	EXTENDER - ANTENNA SHAFT - 3.7" - ENTERTAINMENT CENTER/EXT W/CD
3	147741-01-09B	EA	BRACKET - ANTENNA GROUND - GALVANIZED - ENTERTAINMENT CENTER/EXT W/CD

***COMPONENT PARTS LISTED LATER IN THIS GROUP**

COPYRIGHT © 2007 WINNEBAGO INDUSTRIES INC.

ELECTRICAL GROUP (CONTINUED)

110V BODY WIRING (CONTINUED)

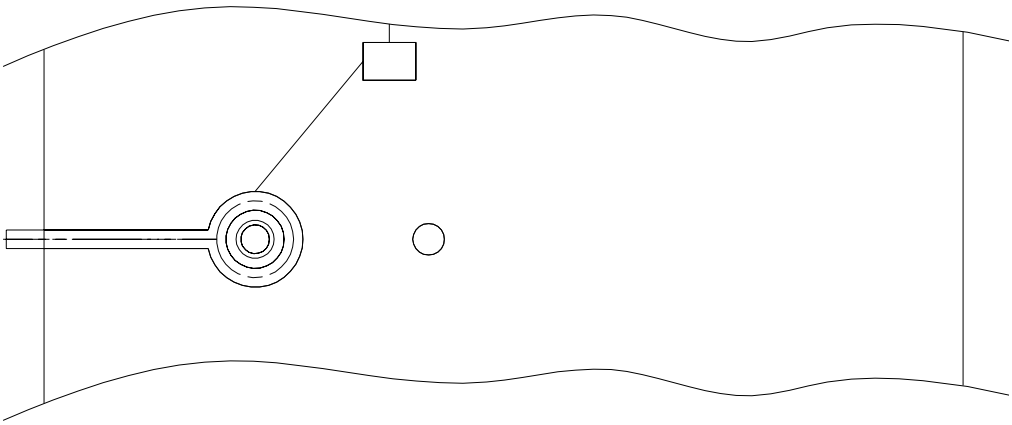

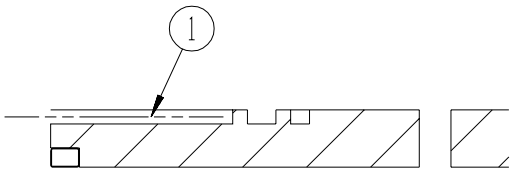

KEY	PART NUMBER	U/M	DESCRIPTION
1	154474-03-000	EA	CABLE - SATELLITE - COAX - 8' W/CONNECTORS

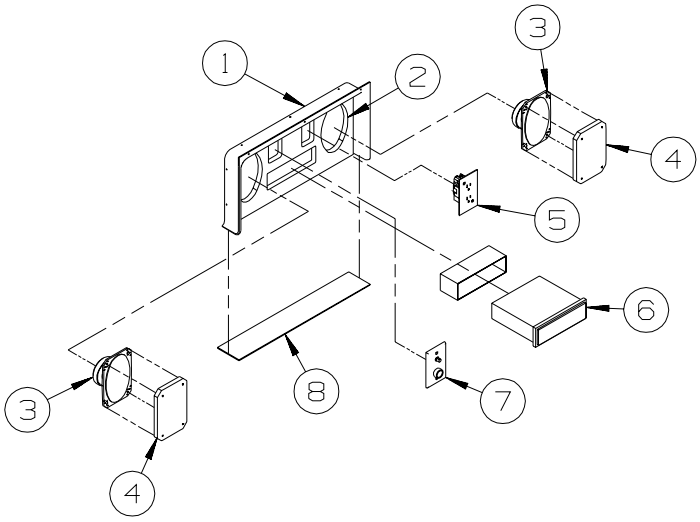

KEY	PART NUMBER	U/M	DESCRIPTION
1	124696-02-01A	EA	BOX-ENTERTAINMENT CTR/EXT-19.4"W X 10"H X 2.5"D - BRT WHT
	124696-01-01A	EA	BOX-ENTERTAINMENT CTR/EXT-19.4"W X 10"H X 10.2"D W/CUTOUTS
2	127409-02-L15	EA	PLATE - RADIO MOUNTING
3	110469-01-000	EA	SPEAKER - 4" X 6" OVAL - COAXIAL
4	110470-01-01A	EA	GRILLE - 4" X 6" - OVAL SPEAKER - BLACK
5	058708-01-000	EA	RECEPTACLE - ELECTRIC - DOUBLE - BROWN
6*	148231-01-000	EA	RADIO - AM/FM CD - W/REMOTE - MAGNADYNE M3100CD FROM: 00-00-00 THRU: 04-11-05
6*	155619-01-000	EA	RADIO - AM/FM CD - W/REMOTE - MAGNADYNE M3200CD FROM: 04-12-05 THRU: 99-99-99
7	076319-09-000	EA	WALLPLATE - TV CABLE RECEPTACLE - SINGLE - BROWN
8	104898-01-02A	EA	PLATE - PLASTIC BOTTOM - BRIGHT WHITE

***COMPONENT PARTS LISTED LATER IN THIS GROUP**

COPYRIGHT © 2007 WINNEBAGO INDUSTRIES INC.

ELECTRICAL GROUP (CONTINUED)

EXTERIOR LAMPS

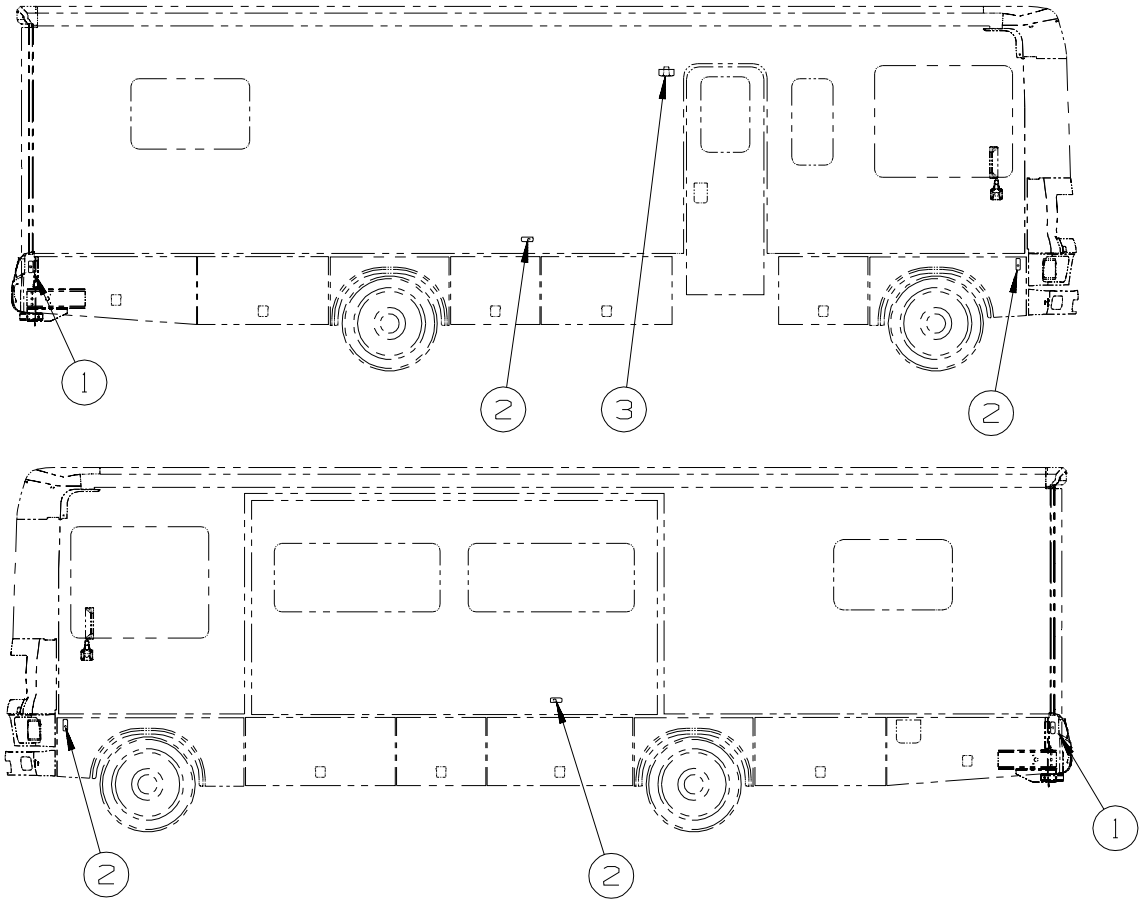

KEY	PART NUMBER	U/M	DESCRIPTION
1	111102-01-000	EA	BASE - MARKER LAMP
	036196-01-000	EA	BULB - 12V - #194 - .27 AMP - BAYONETTE
1	111102-03-000	EA	LENS - RED - MARKER LAMP
2	111102-01-000	EA	BASE - MARKER LAMP
	036196-01-000	EA	BULB - 12V - #194 - .27 AMP - BAYONETTE
2	111102-02-000	EA	LENS - AMBER - MARKER LAMP
3*	097917-01-06A	EA	LIGHT - PORCH - ENTRY DOOR - BRIGHT WHITE
	008215-01-000	EA	BULB - 12 VOLT - #1003 - .94 AMP

***COMPONENT PARTS LISTED LATER IN THIS GROUP**

COPYRIGHT © 2007 WINNEBAGO INDUSTRIES INC.

ELECTRICAL GROUP (CONTINUED)

EXTERIOR LAMPS (CONTINUED)

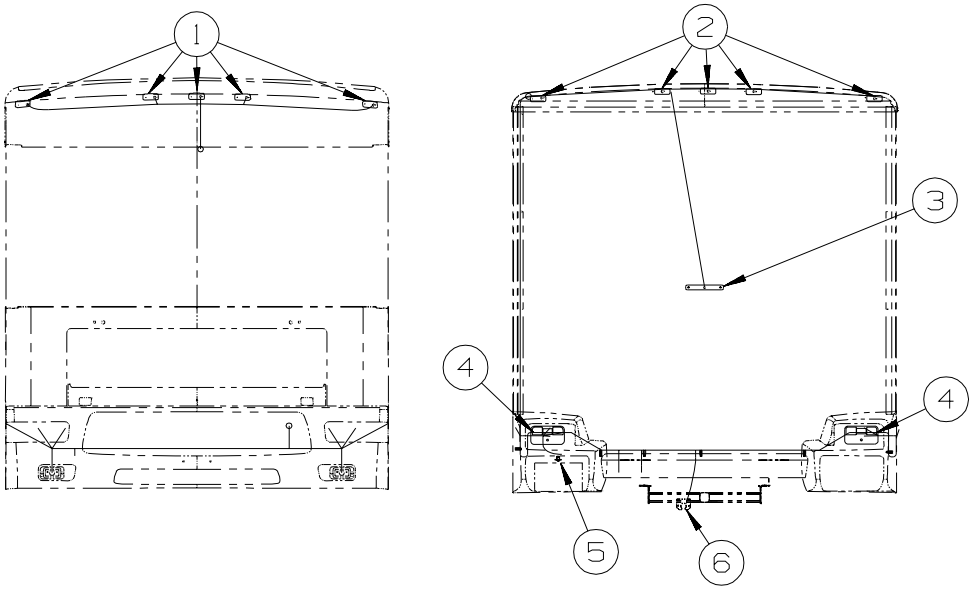

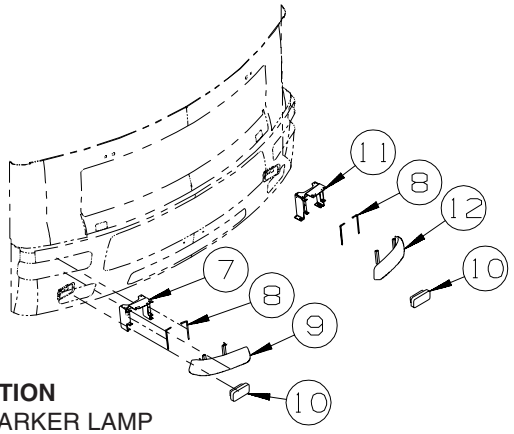

KEY	PART NUMBER	U/M	DESCRIPTION
1	111102-01-000	EA	BASE - MARKER LAMP
	036196-01-000	EA	BULB - 12V - #194 - .27 AMP - BAYONETTE
1	111102-02-000	EA	LENS - AMBER - MARKER LAMP
2	111102-01-000	EA	BASE - MARKER LAMP
	036196-01-000	EA	BULB - 12V - #194 - .27 AMP - BAYONETTE
2	111102-03-000	EA	LENS - RED - MARKER LAMP
3	136916-01-000	EA	LIGHT - BRAKE - CENTER MOUNT - RECTANGLE - 1.3" X 9.8"
4*	115632-03-01A	EA	LIGHT - STOP/TAIL/BACKUP
5	087201-01-000	EA	LIGHT - HALF ROUND - 1" X 1.7" - PLASTIC - BLACK OR WHITE
6*	113589-01-000	EA	CONNECTOR - PLUG - TRAILER
			FROM: 00-00-00 THRU: 01-02-05
6	146246-01-000	EA	CONNECTOR/PLUG - TRAILER - 7 PIN
			FROM: 01-03-05 THRU: 08-22-04
6	113589-02-000	EA	CONNECTOR - SOCKET - TRAILER
7	147901-01-02B	EA	BRACKET/HEADLAMP - PASSENGER - E-COATED
7	147901-02-02B	EA	BRACKET/HEADLAMP - DRIVER - E-COATED
8	148111-01-01A	EA	PIN-MOUNT - HEADLAMP - BLACK
9	148629-01-000	EA	HEADLAMP - PASSENGER/(HIGH/LOW) - W/BULB
9	148629-02-000	EA	HEADLAMP - DRIVER/(HIGH/LOW) - W/BULB
9	124187-01-000	EA	SOCKET/HOUSING - LOW BEAM HEADLAMP
9	124187-02-000	EA	SOCKET/HOUSING - HIGH BEAM HEADLAMP
10	084901-01-000	EA	LAMP - PARK/TURN - GM #916558 (BULB #2057)
			FROM: 00-00-00 THRU: 02-01-06
10	084901-01-000	EA	LAMP - PARK/TURN - AMBER
			FROM: 02-01-06 THRU: 99-99-99

***COMPONENT PARTS LISTED LATER IN THIS GROUP**

COPYRIGHT © 2007 WINNEBAGO INDUSTRIES INC.

ELECTRICAL GROUP (CONTINUED)

FRONT END

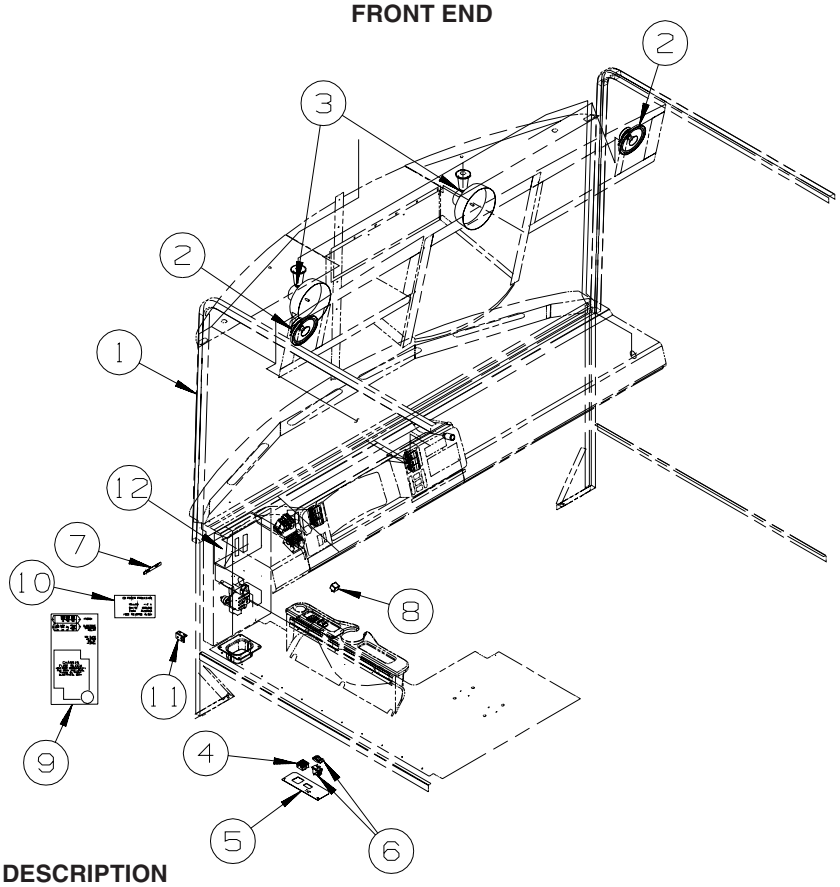

KEY	PART NUMBER	U/M	DESCRIPTION
1	152780-02-000	EA	CABLE/ANTENNA - SATELLITE RADIO SIRRUS FROM: 00-00-00 THRU: 12-04-05
1	158494-02-000	EA	CABLE/ANTENNA - SATELLITE - RADIO/SIRIUS FROM: 12-05-05 THRU: 99-99-99
2	094097-01-000	EA	SPEAKER - RADIO/TV - W/O GRILLE - 5.25" DIAMETER
3	122856-01-01A	EA	FAN-DEFROSTER-2 SPEED W/SWIVEL BASE/NON-OSCILLATING-CHROME
4	088246-01-000	EA	SWITCH/REMOTE MIRROR - W/2PIN & 6 PIN CONNECTORS/PIGTAIL
5	132514-01-02B	EA	PLATE - SWITCH - HEATED MIRROR - E-COATED
6	108357-14-000	EA	SWITCH - ROCKER - SPST-ON/OFF - 4 TERM W/LIGHT W/O COVER
6	108356-03-01A	EA	COVER/ACTUATOR SWITCH - 3 GROOVES W/LIGHT-CONTURA III-BLK
7	133533-04-01A	EA	LABEL - WINDOW/MIRROR HEAT - BLACK/CLEAR
8	063912-02-000	EA	RELAY - CANISTER - SPDT
9	111537-08-000	EA	LABEL - FUSES
10	104678-01-000	EA	LABEL - CB PREP
11	147428-01-02B	EA	BRACKET - Z - TEMP SENSOR
12	135420-20-000	EA	RECEIVER - SATELLITE RADIO SIRRUS

COPYRIGHT © 2007 WINNEBAGO INDUSTRIES INC.

ELECTRICAL GROUP (CONTINUED)

FRONT END (CONTINUED)

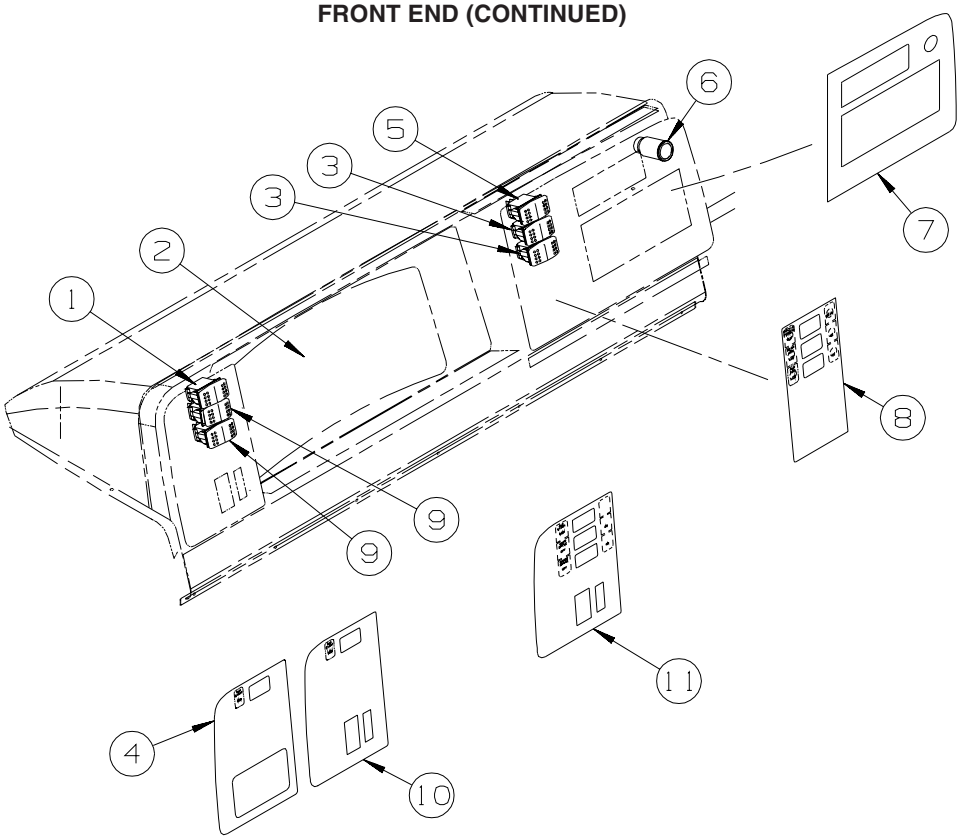

KEY	PART NUMBER	U/M	DESCRIPTION
1	108357-09-000	EA	SWITCH - ROCKER - SPDT - ON/NONE/MOM - 3 TERM - W/O COVER
1	108356-02-01A	EA	COVER/ACTUATOR SWITCH - 2 ROWS DIMPLES - BLACK
1	108355-01-000	EA	HOUSING - SWITCH
1	103603-01-000	EA	BULB - 12V - #74 - .12A WEDGE - GE 22-25 USED IN DASH
2			SUPPLIED BY CHASSIS MANUFACTURER - U.S.
2	144218-01-000	EA	CLUSTER - INSTRUMENT PANEL - MILES/KILOMETERS
3	108357-03-000	EA	SWITCH - ROCKER - SPDT - ON/OFF/ON - 3 TERM - W/O COVER
3	108356-02-01A	EA	COVER/ACTUATOR SWITCH - 2 ROWS DIMPLES - BLACK
3	108355-01-000	EA	HOUSING - SWITCH
3	096241-03-000	EA	SWITCH - BLANK - BLACK
3	103603-01-000	EA	BULB - 12V - #74 - .12A WEDGE - GE 22-25 USED IN DASH
4	104056-49-09A	EA	APPLIQUE - BEZEL/SWITCH - DRIVER - DARK PUTTY - FORD
5	108357-08-000	EA	SWITCH - ROCKER - DPDT - 0N/NONE/ON - 6 TERM - W/O COVER
5	108356-02-01A	EA	COVER/ACTUATOR SWITCH - 2 ROWS DIMPLES - BLACK
5	108355-01-000	EA	HOUSING - SWITCH
5	103603-01-000	EA	BULB - 12V - #74 - .12A WEDGE - GE 22-25 USED IN DASH
6	089294-01-000	EA	LIGHTER - CIGARETTE - W/SOCKET & WIRE
7	104056-54-09A	EA	APPLIQUE - BEZEL - PASSENGER - DRESS UP - DARK PUTTY
8	104056-53-09A	EA	APPLIQUE - BEZEL/3 SWITCH - PASSENGER - DARK PUTTY
	077031-01-000	EA	FILM - BLACK - 1" X 1.75"
	077031-03-000	EA	FILM - WHITE - .75" X 1"
			FROM: 00-00-00 THRU: 05-27-05
9	108356-02-01A	EA	COVER/ACTUATOR SWITCH - 2 ROWS DIMPLES - BLACK
9	108355-01-000	EA	HOUSING - SWITCH
9	103603-01-000	EA	BULB - 12V - #74 - .12A WEDGE - GE 22-25 USED IN DASH
10	104056-48-09A	EA	APPLIQUE - BEZEL/SWITCH - DRIVER - DARK PUTTY - P32 WORKHORSE
11	104056-64-09A	EA	APPLIQUE - BEZEL/OVERDRIVE SWITCH - PASSENGER - DARK PUTTY - W-SERIES WORKHORSE
			FROM: 00-00-00 THRU: 09-25-05
11	104056-65-09A	EA	APPLIQUE - BEZEL/OVERDRIVE SWITCH - PASSENGER - DARK PUTTY - W-SERIES WORKHORSE
			FROM: 09-26-05 THRU: 99-99-99

COPYRIGHT © 2007 WINNEBAGO INDUSTRIES INC.

ELECTRICAL GROUP (CONTINUED)

FRONT TV/VCR

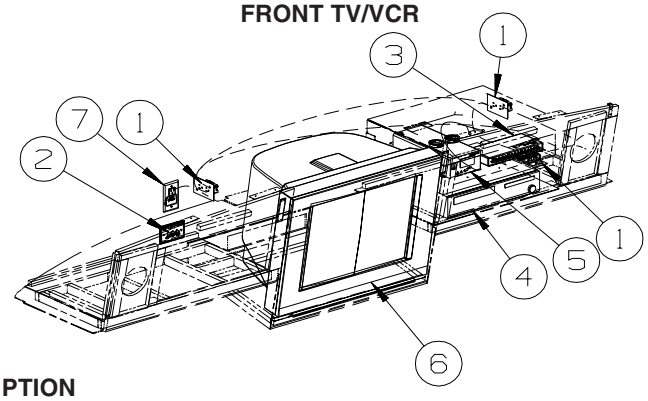

KEY	PART NUMBER	U/M	DESCRIPTION
1	058708-01-000	EA	RECEPTACLE - ELECTRIC - DOUBLE - BROWN
1	158542-02-01A	EA	LABEL - RECEPTACLE - ELECTRONICS - WHITE/BLACK
2	149557-04-01A	EA	PLATE/WALL - TRIPLE COAXIAL/HORIZONTAL - WHITE
3	142258-01-000	EA	SWITCH - VIDEO/ANTENNA POWER SUPPLY - VIDEO SELECTION SYSTEM
4*	145641-04-000	EA	DVD/VCR PLAYER - RCA DRC6300N - STEREO DVD/VCR FROM: 00-00-00 THRU: 10-09-05
4	145641-05-000	EA	DVD/VCR PLAYER - RCA DRC6350N - STEREO DVD/VCR FROM: 10-10-05 THRU: 99-99-99
4*	150089-01-000	EA	DVD/VCR PLAYER - RCA RTD300/SP - HOME THEATER SYSTEM
5	099048-04-000	EA	INVERTER - 300 WATT
6*	152441-01-000	EA	TV - 24" - STEREO/3 JACKS - RCA 24V511T FROM: 00-00-00 THRU: 11-30-05
6*	152441-02-000	EA	TV - 24" - STEREO/3 JACKS - RCA 24V412T FROM: 12-01-05 THRU: 99-99-99
7	156676-01-000	EA	CONTROLLER/OUTLET - POWER/TV - AUTO SHUTOFF W/IGNITION FROM: 08-22-05 THRU: 99-99-99

***COMPONENT PARTS LISTED LATER IN THIS GROUP**

COPYRIGHT © 2007 WINNEBAGO INDUSTRIES INC.

ELECTRICAL GROUP (CONTINUED)

COMPONENT PARTS FOR WIRING

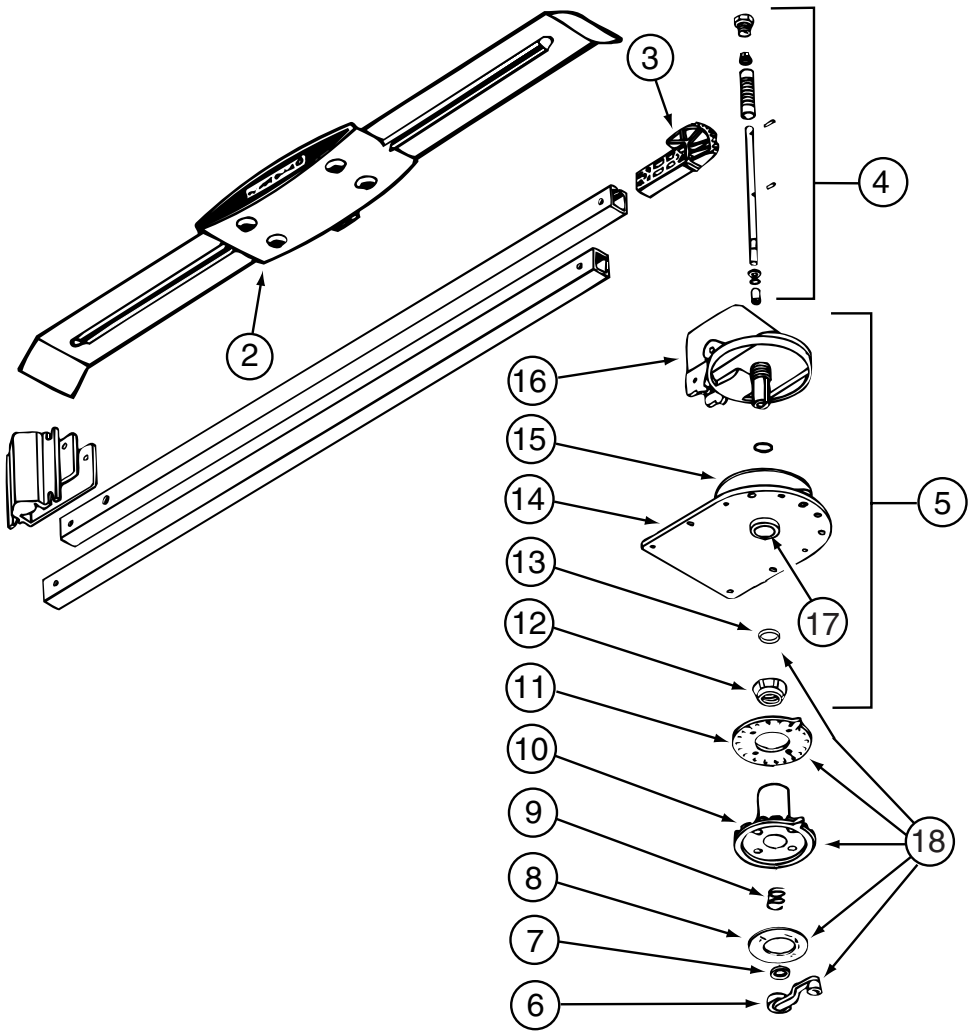

076319-23-000

KEY	PART NUMBER	U/M	DESCRIPTION	VENDOR NO.
2	076319-01-700	EA	HEAD-ANTENNA, AMPLIFIED	RVSA U/V
3	076319-01-701	EA	GEAR-ELEVATING, PLASTIC	2200046
4	076319-01-702	EA	SHAFT ASM-ELEVATING	RP-4000
5	076319-01-711	EA	BASE & LIFT ASM	2762802
7	076319-01-705	EA	GROMMET-NYLON, 7/8"ID	3200658
8	076319-01-708	EA	DECAL-CRANK	5413002
9	076319-01-707	EA	SPRING-HANDLE	2160822
11	076319-01-712	EA	PLATE - CEILING	3200608
12	076319-01-715	EA	NUT (GEAR HOUSING)	2200047
14	076319-01-713	EA	PLATE-BASE, STEEL	3100523
15	076319-01-703	EA	BEARING-NYLON, 5"OD	3200656
16	076319-01-714	EA	HOUSING, ROTATING GEAR	2200049
17	076319-01-704	EA	BEARING-NYLON, 1.25"OD	3200657
18	076319-01-709	EA	HANDLE-HEAD DIRECTIONAL	200644
	076319-01-716	EA	TUBING, ELEVATING	RP-2900
			CONTACT WINNEBAGO PART SALES FOR UNLISTED COMPONENT(S)	

076319-25-000

KEY	PART NUMBER	U/M	DESCRIPTION	VENDOR NO.
6	076319-01-706	EA	CRANK-W/SET SCREW UNIV/BEIGE	2750897
6	120233-01-710	EA	HANDLE-CRANK W/SCREW - WHITE	RP-6795
8	076319-01-708	EA	DECAL-CRANK	5413002
10	076319-25-700	EA	DIRECTIONAL HANDLE(WHITE)	3200612
11	076319-25-701	EA	PLATE - CEILING(WHITE)	3200609
13	120233-01-709	EA	WASHER-NYLON	RP-2658
			CONTACT WINNEBAGO PART SALES FOR UNLISTED COMPONENT(S)	

COPYRIGHT © 2007 WINNEBAGO INDUSTRIES INC.

ELECTRICAL GROUP (CONTINUED)

COMPONENT PARTS FOR WIRING (CONTINUED)

086231-10-000

KEY	PART NUMBER	U/M	DESCRIPTION	VENDOR NO.
	086231-08-700	EA	REMOTE-UNIVERSAL	0892325
	086231-10-700	EA	ADAPTER WIRE - (CIGARETTE)	0894000
	086231-10-701	EA	CONVERTER/POWER SUP 110/12 V	0891412

087694-01-000

KEY	PART NUMBER	U/M	DESCRIPTION	VENDOR NO.
	087694-01-700	EA	BULB	GE561

097917-01-06A

KEY	PART NUMBER	U/M	DESCRIPTION	VENDOR NO.
	097917-01-700	EA	LENS-LIGHT, CLEAR	30-78-021

115632-03-01A

KEY	PART NUMBER	U/M	DESCRIPTION	VENDOR NO.
	115632-03-700	EA	LENS - RED-(STOP/TAIL/BACK)	3092-704

121935-01-01A

KEY	PART NUMBER	U/M	DESCRIPTION	VENDOR NO.
	121935-01-700	EA	LENS ONLY	809511

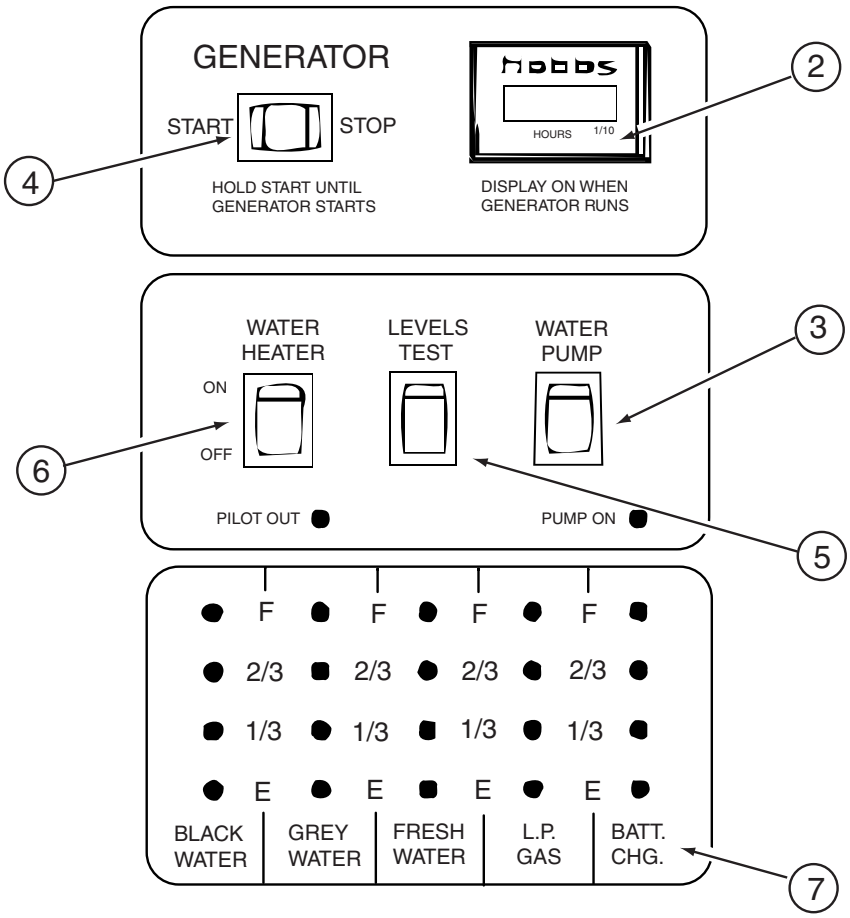

134940-01-01A

KEY	PART NUMBER	U/M	DESCRIPTION	VENDOR NO.
2	100258-10-701	EA	GAUGE-HR METER ONLY (LCD)	L0775-00
3	096983-01-703	EA	SWITCH - ON/ON	L0115-00
4	096983-01-702	EA	SWITCH - MOM/OFF/MOM/3 TERM	L0112-00
5	096983-01-701	EA	SWITCH - SPST/MOM 2 TERMINAL	L0111-00
6	134940-01-701	EA	SWITCH-SPST/ON-OFF/BLK W/LGT	L0109
7	134940-01-702	EA	CHASSIS - SILKSCREENED	CC0558-00
	100258-10-702	EA	HOUR METER(SNAP-IN)SW & WIRE	L4441-00
	134940-01-700	EA	BOARD - PC	L5118-01

COPYRIGHT © 2007 WINNEBAGO INDUSTRIES INC.

ELECTRICAL GROUP (CONTINUED)

COMPONENT PARTS FOR WIRING (CONTINUED)

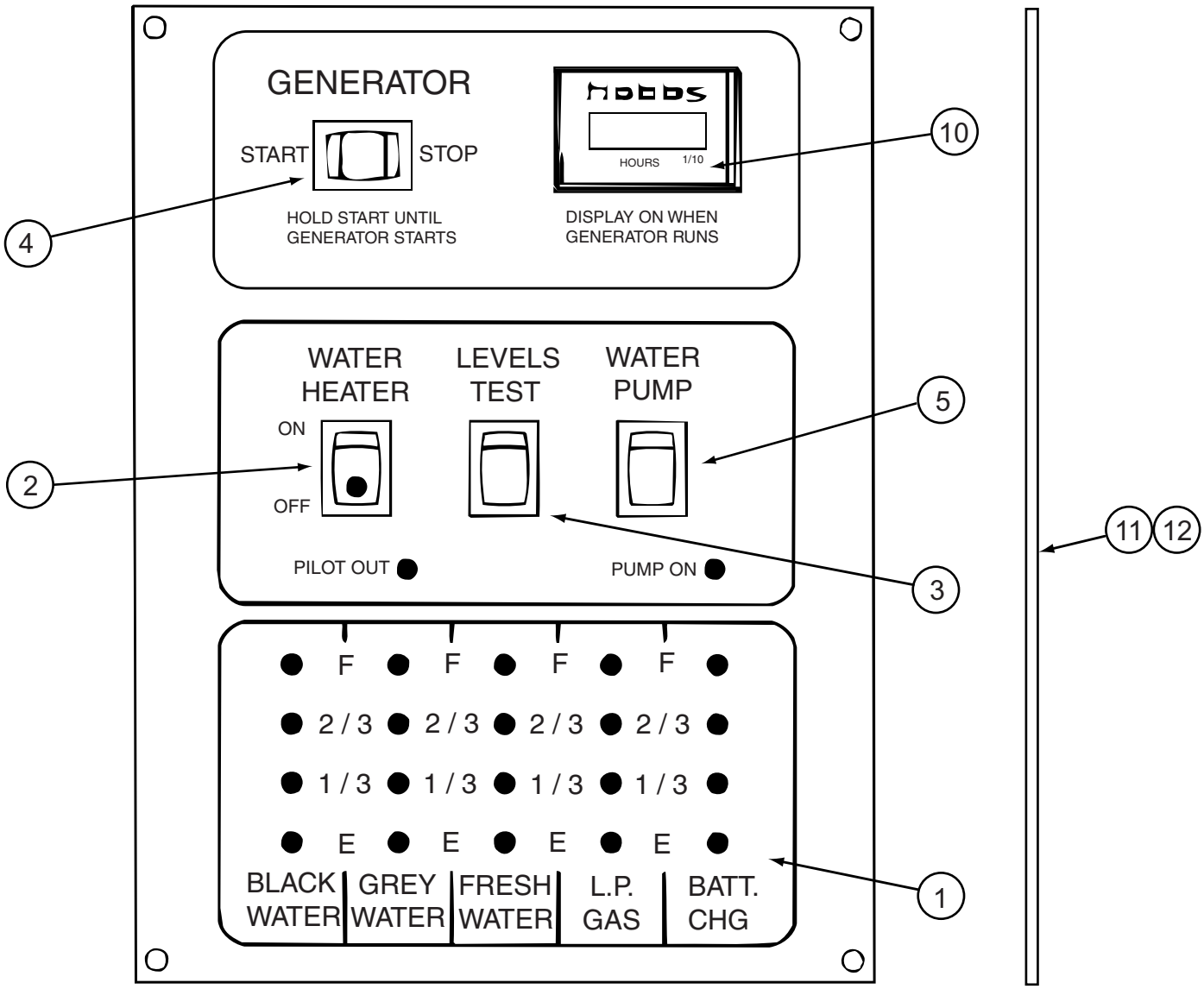

134940-06-01A

KEY	PART NUMBER	U/M	DESCRIPTION	VENDOR NO.
1	134940-01-702	EA	CHASSIS - SILKSCREENED	CC0558-00
2	134940-01-701	EA	SWITCH-SPST/ON-OFF/BLK W/LGT	L0109
3	096983-01-701	EA	SWITCH - SPST/MOM 2 TERMINAL	L0111-00
4	096983-01-702	EA	SWITCH - MOM/OFF/MOM/3 TERM	L0112-00
5	096983-01-703	EA	SWITCH - ON/ON	L0115-00
10	100258-10-701	EA	GAUGE-HR METER ONLY (LCD)	L0775-00
11	134940-06-700	EA	PC BOARD - SENSOR SYSTEM/RED	L5131-02

CONTACT WINNEBAGO PART SALES FOR UNLISTED COMPONENT(S)

COPYRIGHT © 2007 WINNEBAGO INDUSTRIES INC.

ELECTRICAL GROUP (CONTINUED)

COMPONENT PARTS FOR WIRING (CONTINUED)

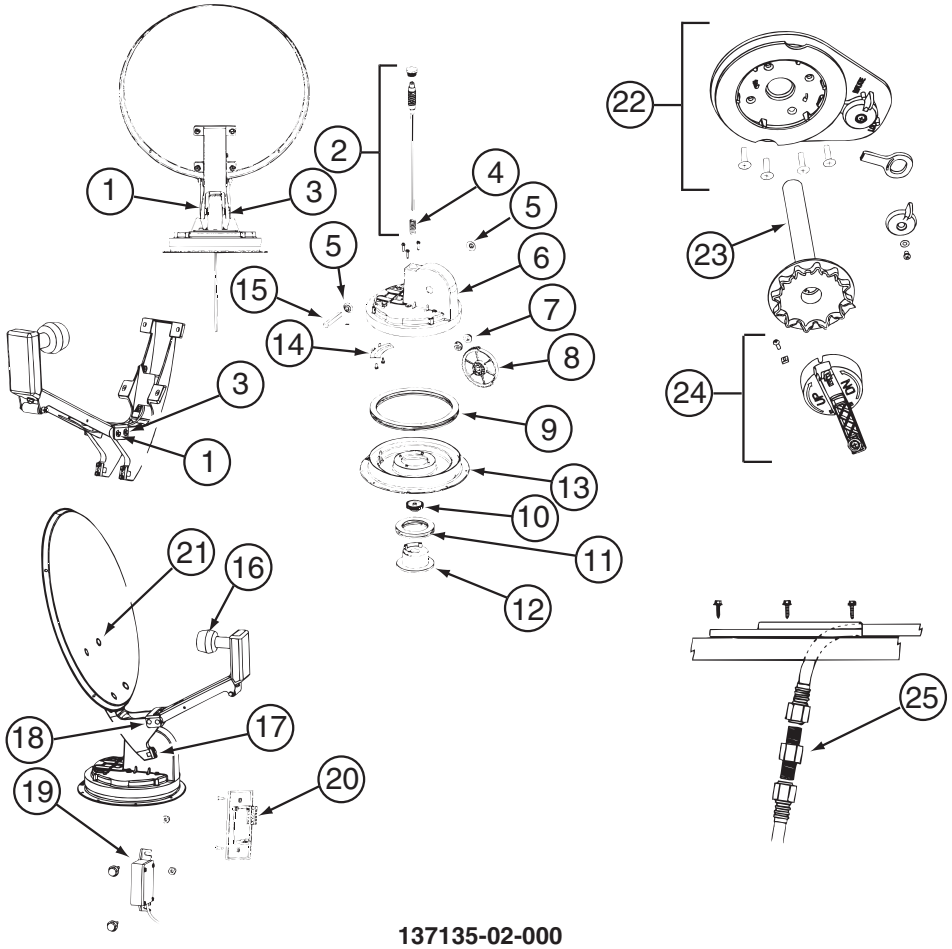

137135-02-000

KEY	PART NUMBER	U/M	DESCRIPTION	VENDOR NO.
1	120233-01-714	EA	CLIP-E	5160818
2	137135-01-703	EA	KIT ELEV - SHAFT/GEAR/SPRING	RP-4400
3	137135-01-704	EA	PIN - 1/4" X 3.25"	2160813
4	137135-01-705	EA	SPRING	2160818
5	137135-01-707	EA	SEAL - PIVOT SHAFT	2200852
6	137135-01-708	EA	TURRET	3100728
7	137135-01-709	EA	PIVOT BEARING	2200470
8	137135-01-711	EA	GEAR - ELEVATING	2200464
9	137135-01-712	EA	BEARING - OUTER	2590347
10	137135-01-714	EA	GEAR - ELEVATING SHAFT	2200465
11	137135-01-715	EA	BEARING - INNER	2590348
12	137135-01-716	EA	HUB	3100731
13	137135-01-713	EA	TURRET BASE	3100730
14	137135-01-710	EA	PLATE - ROTATE LIMIT	3720052
16	137135-02-703	EA	LOW NOISE BLOCK FILTER	LB-6000 - DUAL
17	137135-01-722	EA	CLAMP	2590343
18	137135-01-719	EA	BRACKET - PIVOT	2744945
19	137135-01-720	EA	DE-SENSOR UNIT W/43" CABLE	DM4000
20	137135-02-701	EA	BOX - SURFACE MOUNT	SM-100
21	137135-01-717	EA	BOLT - FLAT HEAD	2160362
22	120233-01-737	EA	PLATE/INT-W/DIRECTIONAL HDLE	RK-CEIL
23	120233-01-704	EA	DIAL/DIRECTIONAL 4"W/SPRING	3200364
24	120233-01-738	EA	HDW PKG-HANDLE/SPRING/WASHER	RK-HAND
25	137135-01-701	EA	CONNECTOR - F - MALE TO MALE	FS-8100
	120233-04-700	EA	KIT-WALL PLATE/CABLE - GRAY	DM4000
	137135-01-700	EA	ROOF WEDGE W/GASKET	RW-5000
	137135-01-706	EA	KIT-TURRET/SEAL/BEARING/GEAR	RP-RM30
	137135-01-718	EA	REFLECTOR/WHITE-46CM W/HDW	RP-35RM
	137135-02-700	EA	DE-SENSOR	2780096
	137135-02-704	EA	KIT-UPDATE DIRECTIONAL HDL	RP-RMDH
	137135-02-705	EA	KIT-TURRET & SHAFT COMPLETE	RP-RM46

CONTACT WINNEBAGO PART SALES FOR UNLISTED COMPONENT(S)

COPYRIGHT © 2007 WINNEBAGO INDUSTRIES INC.

ELECTRICAL GROUP (CONTINUED)

COMPONENT PARTS FOR WIRING (CONTINUED)

137417-01-01A, 137417-03-01A

KEY	PART NUMBER	U/M	DESCRIPTION	VENDOR NO.
	137417-01-700	EA	LENS - SINGLE (FROSTED)	810868

137417-05-01A

KEY	PART NUMBER	U/M	DESCRIPTION	VENDOR NO.
	137417-05-700	EA	LENS - DOUBLE OPTIC	810845

137417-06-01A

KEY	PART NUMBER	U/M	DESCRIPTION	VENDOR NO.
	137417-06-700	EA	LENS - DOUBLE WHITE	810867

145641-02-000, 145641-04-000

KEY	PART NUMBER	U/M	DESCRIPTION	VENDOR NO.
	145641-02-700	EA	REMOTE	260607

148231-01-000

KEY	PART NUMBER	U/M	DESCRIPTION	VENDOR NO.
	148231-01-700	EA	REMOTE	RC3100

145641-03-000

KEY	PART NUMBER	U/M	DESCRIPTION	VENDOR NO.
	145641-03-700	EA	REMOTE	RCR311DA1

148230-01-000, 148230-02-000

KEY	PART NUMBER	U/M	DESCRIPTION	VENDOR NO.
	148230-01-700	EA	REMOTE (TV)	260605

148230-03-000

KEY	PART NUMBER	U/M	DESCRIPTION	VENDOR NO.
	149040-02-700	EA	REMOTE (TV)	RCR311TBM1-RCA

148231-01-000

KEY	PART NUMBER	U/M	DESCRIPTION	VENDOR NO.
	148231-01-700	EA	REMOTE	RC3100

150089-01-000

KEY	PART NUMBER	U/M	DESCRIPTION	VENDOR NO.
	150089-01-700	EA	REMOTE	265683

152441-01-000

KEY	PART NUMBER	U/M	DESCRIPTION	VENDOR NO.
	152441-01-700	EA	REMOTE - TV	265714

155619-01-000

KEY	PART NUMBER	U/M	DESCRIPTION	VENDOR NO.
	155619-01-700	EA	REMOTE	RC3200

COPYRIGHT © 2007 WINNEBAGO INDUSTRIES INC.

ELECTRICAL GROUP (CONTINUED)

CIRCUIT BREAKERS, FUSES & RELAYS

KEY	PART NUMBER	U/M	DESCRIPTION
	008235-01-000	EA	FUSE - 15 AMP/12VOLT - AUTOMOTIVE
	062901-02-000	EA	FUSE - 5 AMP - AUTOMOTIVE
	062901-04-000	EA	FUSE - 10 AMP - AUTOMOTIVE
	062901-05-000	EA	FUSE - 15 AMP - AUTOMOTIVE
	062901-06-000	EA	FUSE - 20 AMP - AUTOMOTIVE
	062901-07-000	EA	FUSE - 25 AMP - AUTOMOTIVE
	062901-08-000	EA	FUSE - 30 AMP - AUTOMOTIVE
	063910-01-000	EA	HOUSING - RELAY
	063912-02-000	EA	RELAY - CANISTER - SPDT
	083209-01-000	EA	CIRCUIT BREAKER - 15 AMP - 120 VOLT - CANADIAN
	083209-02-000	EA	CIRCUIT BREAKER - 15/15 AMP - 120 VOLT
	083209-03-000	EA	CIRCUIT BREAKER - 15/20 AMP - 120 VOLT
	083209-04-000	EA	CIRCUIT BREAKER - 30 AMP - 120 VOLT
	083209-05-000	EA	CIRCUIT BREAKER - 20 AMP - 120 VOLT
	083209-06-000	EA	CIRCUIT BREAKER - 30/15 AMP - 120 VOLT
	083209-07-000	EA	CIRCUIT BREAKER - 20/20 AMP - 120 VOLT
	083209-10-000	EA	CIRCUIT BREAKER - 20/30 AMP - 120 VOLT
	083209-11-000	EA	CIRCUIT BREAKER - 20/15 AMP - 120 VOLT
	092786-01-000	EA	BUSS BAR-2.1" LONG
	092786-03-000	EA	BUSS BAR - 6.9" LONG
	092786-06-000	EA	BUSS BAR
	093654-01-000	EA	CIRCUIT BREAKER - 6 AMP - 12 VOLT - PUSH BUTTON - WHITE
	093654-02-000	EA	CIRCUIT BREAKER - 15 AMP - 12 VOLT - PUSH BUTTON - WHITE
	093654-03-000	EA	CIRCUIT BREAKER - 20 AMP - 12 VOLT - PUSH BUTTON - WHITE
	093654-11-000	EA	COVER - RESET BUTTON
	093655-01-000	EA	CIRCUIT BREAKER - 25 AMP - 12 VOLT - PUSH BUTTON - WHITE
	093655-02-000	EA	CIRCUIT BREAKER - 30 AMP - 12 VOLT - PUSH BUTTON - WHITE
	093655-03-000	EA	CIRCUIT BREAKER - 40 AMP - 12 VOLT - PUSH BUTTON - WHITE
	097611-01-000	EA	CIRCUIT BREAKER - 10 AMP
	097611-02-000	EA	CIRCUIT BREAKER - 30 AMP
	097611-03-000	EA	CIRCUIT BREAKER - 20 AMP
	100341-01-000	EA	FUSE HOLDER - IN LINE TYPE
	106656-01-000	EA	FUSE BLOCK - 4 CAVITY - AUTOFUSE
	113482-01-000	EA	CIRCUIT BREAKER - 55 AMP - MANUAL
	115187-01-000	EA	FUSE - 300 AMP - NON-DELAY
	115187-02-000	EA	HOLDER - FUSE
	115187-03-000	EA	FUSE - 60 AMP - NON-DELAY
	122811-01-000	EA	CIRCUIT BREAKER - 20/50/50/20 AMP - 250V
	125986-02-000	EA	FUSE - 5 AMP - AUTO - MINI BLADE
	125986-05-000	EA	FUSE - 15 AMP - AUTO - MINI BLADE
	141789-01-000	EA	SPACER - CIRCUIT BREAKER

COPYRIGHT © 2007 WINNEBAGO INDUSTRIES INC.

ELECTRICAL GROUP (CONTINUED)
CONVERTER, INVERTER, LOAD CENTERS

KEY	PART NUMBER	U/M	DESCRIPTION
	099048-04-000	EA	INVERTER - 300 WATT
	123058-02-000	EA	CONVERTER - 45 AMP - ELECTRONIC - 4 1/8"H X 7"W X 12 3/8"L

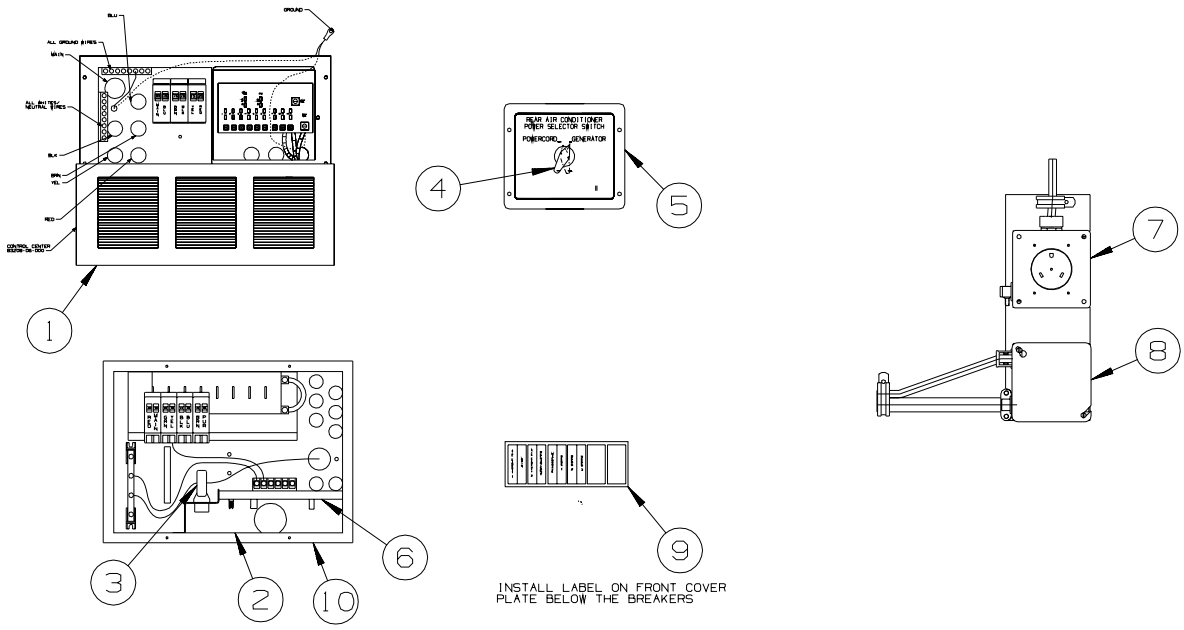

KEY	PART NUMBER	U/M	DESCRIPTION
1	083208-06-000	EA	CONTROL CENTER - 45 AMP/120V/12V - W/O BREAKERS/ELECTRONIC FROM: 00-00-00 THRU: 01-13-05
1	083208-07-000	EA	CONTROL CENTER - 45 AMP - 120V/12V - W/O BREAKERS FROM: 01-14-05 THRU: 99-99-99
2	141258-01-000	EA	LOAD CENTER - 120/240 - 50 AM
3	127002-07-000	EA	SENSOR - CURRENT
4	073937-03-000	EA	SWITCH - ROTARY- AC - SELECTOR - 3 DECK
5	121365-03-01A	EA	COVER - REAR A/C POWER SELECT SWITCH - POWERCORD/GENERATOR
6	127002-11-000	EA	MODULE - EMS CENTER - W/REMOTE SENSOR
7	024924-02-000	EA	RECEPTACLE - POWER CORD - W/PARTIAL PLATE
8	008289-01-000	EA	BOX - ELECTRIC/STEEL - 4" X 4" - 1/2" & 3/4" KNOCKOUTS
9	095721-27-000	EA	LABEL - CONTROL CENTER - 30 AMP
9	095721-31-000	EA	LABEL - CONTROL CENTER - 30 AMP - US - MOTOR AID
10	141258-02-000	EA	LOAD CENTER - COVER

COPYRIGHT © 2007 WINNEBAGO INDUSTRIES INC.

ELECTRICAL GROUP (CONTINUED)

BOXES & CORDS

KEY	PART NUMBER	U/M	DESCRIPTION
	008289-01-000	EA	BOX - ELECTRIC/STEEL - 4" X 4" - 1/2" & 3/4" KNOCKOUTS
	074890-01-000	EA	BOX - EXTENSION/STEEL - OPEN SIDES - 4" X 4" X 1 1/2"
	133070-01-000	EA	BOX - ELECTRIC/PLASTIC - 3" X 2" X 2.8" - UL
	133070-02-000	EA	BOX - ELECTRIC/PLASTIC - 3" X 2" X 2.8" - CSA
	131679-01-000	EA	BOX/ELECTRIC-WATERPROOF-4" X 4" - W/4 3/4"OUTLETS-UL/CSA
	008294-01-000	EA	COVER - ELECTRIC BOX - BLANK/STEEL - 4" X 4" - GRAY
	069238-01-000	EA	COVER - ELECTRICAL BOX - W/HOLE - 4" X 4" - GRAY
	074897-01-000	EA	COVER - ELECTRICAL BOX W/HOLES - 4" X 4"
	131680-01-000	EA	COVER - F/ELECTRIC BOX W/GASKET 4" X 4" - UL/CSA
	008054-01-000	EA	CORD - POWER - 10/3 WIRE - 30 AMP - 25'
	115832-01-000	FT	CORD - HEAVY DUTY - 14-2W GROUND
	092492-11-000	EA	SEAL - ELECTRIC BOX - 7" X 18.4"
	109925-04-000	EA	DOOR - ELECTRICAL BOX - GM/FORD

WIRE ASSEMBLIES

KEY	PART NUMBER	U/M	DESCRIPTION
	077069-02-000	EA	CABLE/EXTENSION - RADIO ANTENNA - 96"
	125853-04-000	EA	WIRE LOOM - ENTERTAINMENT CENTER
	126030-01-000	EA	WIRE ASM-WIPER/WASHER
	135420-02-000	EA	WIRE LOOM - RADIO
	135420-16-000	EA	WIRE LOOM - RADIO
	136514-02-000	EA	CABLE - MONITOR/CAMERA
	137135-03-000	EA	WIRE LOOM - DIGITAL ELEVATION SENSOR
	137135-04-000	EA	WIRE HARNESS - POWER - DIGITAL ELEVATION SENSOR
	142258-02-000	EA	WIRE LOOM - VIDEO SWITCH/POWER SUPPLY
	144677-07-000	EA	WIRE - MONITOR - POWER - 3 PIN TO 6 PIN (3 WIRE)
	145210-01-000	FT	CABLE - COAXIAL
	147313-01-000	EA	WIRE - OUTSIDE TEMP SENSOR - W/O SENSOR
	151316-03-000	EA	WIRE ASM - W/NON CONTACT SENSORS - GREY WATER - 43.2"
	151317-01-000	EA	WIRE ASM-W/NON CONTACT SENSORS-FRESH WATER/BLK TANK-3.9"
	151317-02-000	EA	WIRE ASM-W/NON CONTACT SENSORS-FRESH WATER/BLK TANK-23.6"

COPYRIGHT © 2007 WINNEBAGO INDUSTRIES INC.

ELECTRICAL GROUP (CONTINUED)

CONNECTORS & CONDUIT

KEY	PART NUMBER	U/M	DESCRIPTION
	007940-01-000	EA	RECEPTACLE/SLIDE 16 TO 12 AWG - FEMALE END
	007940-02-000	EA	RECEPTACLE/SLIDE 10 AWG
	007954-01-000	EA	RECEPTACLE - HOUSING - 6 POSITION
	007956-05-000	EA	INSULATOR - SHRINK - 1/4"ID X 1 1/2"
	008058-01-000	EA	ADAPTER - POWER CORD - 30 AMP TO 15 AMP
	008311-01-000	EA	CONNECTOR - WIRE NUT - INSULATED - RED
	008312-01-000	EA	CONNECTOR - WIRE NUT - INSULATED - BLUE
	008313-01-000	EA	CONNECTOR - WIRE NUT - INSULATED - YELLOW
	008314-01-000	EA	CONNECTOR - WIRE NUT - INSULATED - GRAY
	008328-01-000	EA	TERMINAL - RING - 12/10 WIRE - #10 STUD FIT
	008331-01-000	EA	TERMINAL - RING - TONGUE - #4 WIRE - 3/8" STUD - COPPER
	008348-01-000	EA	TERMINAL - RING - 3/8" STUD 2 GA. WIRE
	008355-01-000	EA	CONNECTOR - CABLE CLAMPING - 3/4"
	008356-01-000	EA	CONNECTOR - PLASTIC - 3/8"
	008356-02-000	EA	CONNECTOR - PLASTIC - 21/32"
	008398-01-000	EA	CONNECTOR - 1/2" X 90 DEGREE - FLEX CONDUIT - UL & CSA
	035416-04-000	EA	TERMINAL - RING - #10 STUD FIT - INSULATED BARREL #16/14
	041953-01-000	FT	CONDUIT - CONVOLUTE SLIT - .5" ID - POLYETHYLENE
	041953-02-000	FT	CONDUIT - CONVOLUTE SLIT - .6" ID - POLYETHYLENE
	041953-03-000	FT	CONDUIT - CONVOLUTE SLIT - 1" ID (CLOTHES ROD COVER)
	041953-06-000	FT	CONDUIT - CONVOLUTE SLIT - .4" ID - POLYETHYLENE
	041953-07-000	FT	CONDUIT - CONVOLUTE SLIT - .25" ID - POLYETHYLENE
	041953-08-000	FT	CONDUIT - CONVOLUTE SLIT - 1.5" ID - POLYETHYLENE
	041953-09-000	FT	CONDUIT - CONVOLUTE SLIT - .5" ID - NYLON
	041953-10-000	FT	CONDUIT - CONVOLUTE SLIT - .75" ID - NYLON
	041953-11-000	FT	CONDUIT - CONVOLUTE SLIT - 1.06" ID - NYLON
	041953-12-000	FT	CONDUIT - CONVOLUTE SOLID - 1.1" ID - NYLON
	041953-13-000	FT	CONDUIT - CONVOLUTE SLIT - 1.25" ID
	041953-14-000	FT	CONDUIT - CONVOLUTE SLIT - 1.5" ID
	041953-15-000	FT	CONDUIT - CONVOLUTE SLIT - 2"
	047443-01-000	EA	TERMINAL - .250 RECEPTACLE FIT - INSULATED - 16/14 AWG
	047443-02-000	EA	TERMINAL - .250 RECEPTACLE FIT - INSULATED - 12/10 AWG
	047443-05-000	EA	TERMINAL - .250 RECEPTICLE FIT - 18GA AWG
	058028-01-000	EA	CONNECTOR - ELECTRICAL PIGTAIL - NYLON - CLEAR
	077479-01-000	EA	BOOT - BATTERY TERMINAL - DOUBLE CABLE
	077479-02-000	EA	BOOT - BATTERY TERMINAL - SINGLE CABLE
	080015-02-000	EA	RECEPTACLE - FLAG - .185 - 16/14 GAUGE
	080015-03-000	EA	RECEPTACLE - FLAG - .250 - 14/16 GAUGE
	080015-04-000	EA	RECEPTACLE - FLAG - .187 - 16/14 GAUGE
	082109-01-000	EA	HOUSING - CONNECTOR - PACKARD
	087225-01-000	FT	SLEEVING - 1/2" - TYPE H
	087949-01-000	EA	BUSS BAR - 2 POSITION - .6" X 1.5"
	088473-01-000	EA	HOUSING - PIN - 12 CAVITY (3 ROWS OF 4)
	088473-02-000	EA	HOUSING - PIN - 15 CAVITY (3 ROWS OF 5)
	088473-03-000	EA	HOUSING - PIN - 9 CAVITY (3 ROWS OF 3)
	088473-04-000	EA	HOUSING - PIN - 8 CAVITY IN-LINE
	088473-06-000	EA	HOUSING - PIN - 6 CAVITY (2 ROWS OF 3)
	088473-07-000	EA	HOUSING - PIN - 5 CAVITY - IN-LINE
	088473-08-000	EA	HOUSING - PIN - 4 CAVITY - IN-LINE
	088473-09-000	EA	HOUSING - PIN - 3 CAVITY - IN-LINE
	088473-10-000	EA	HOUSING - PIN - 2 CAVITY - IN-LINE
	088473-12-000	EA	HOUSING - PIN - 3 CAVITY - BLUE
	088473-13-000	EA	HOUSING - PIN - 3 CAVITY - GREEN
	088473-14-000	EA	HOUSING - PIN - 3 CAVITY - RED
	088474-01-000	EA	HOUSING - SOCKET - 12 CAVITY
	088474-02-000	EA	HOUSING - SOCKET - 15 CAVITY
	088474-03-000	EA	HOUSING - SOCKET - 9 CAVITY
	088474-06-000	EA	HOUSING - SOCKET - 6 CAVITY
	088474-07-000	EA	HOUSING - SOCKET - 5 CAVITY
	088474-08-000	EA	HOUSING - SOCKET - 4 CAVITY
	088474-09-000	EA	HOUSING - SOCKET - 3 CAVITY
	088474-10-000	EA	HOUSING - SOCKET - 2 CAVITY
	088475-01-000	EA	PIN - CONNECTOR - 14-20 AWG
	088475-02-000	EA	PIN - CONNECTOR - 10-12 AWG

COPYRIGHT © 2007 WINNEBAGO INDUSTRIES INC.

ELECTRICAL GROUP (CONTINUED)

CONNECTORS & CONDUIT (CONTINUED)

KEY	PART NUMBER	U/M	DESCRIPTION
	088476-01-000	EA	TERMINAL - ELECTRICAL
	088476-02-000	EA	SOCKET - CONNECTOR - 12-10 GA - PRE-TIN
	098261-01-000	EA	SOCKET - CONNECTOR - WEATHERPACK - 12 AWG
	098261-02-000	EA	SOCKET - CONNECTOR - WEATHERPACK - 14-18 AWG
	098262-01-000	EA	SEAL - CONNECTOR - WEATHERPACK
	098264-01-000	EA	HOUSING - 2 PIN - WEATHER PACK - MALE W/FEMALE PINS
	098264-02-000	EA	HOUSING - 2 PIN - WEATHER PACK - FEMALE W/MALE PINS
	098265-02-000	EA	PIN - CONNECTOR - WEATHER PACK
	102777-02-000	EA	TERMINAL - RING - #6 STUD - 10 AWG
	103608-01-000	EA	SOCKET - WEDGE BASE W/LEADS
	104100-01-000	EA	HOUSING - 1 POSITION - 75 AMPS
	104100-03-000	EA	TERMINAL - 75 AMP
	106007-02-000	EA	TERMINAL - FEMALE - 10-12 AWG
	110178-01-000	EA	HOUSING - WIPER MOTOR
	112823-01-000	EA	SPLICE - REDUCER - 16-14 TO 18-22
	113135-01-000	EA	TERMINAL - FEMALE - M/P - 14-16 - F/SEALED TERMINAL
	113308-01-000	EA	TERMINAL - FEMALE - M/P - 14-16 - 280
	115931-02-000	EA	COVER - CONNECTOR - 50 AMP W/LOCKING RING
	115932-02-000	EA	CONNECTOR - FEMALE - 50 AMP/240 VOLT
	118571-01-000	EA	CONNECTOR - 3-WAY - MALE/SEALED
	118571-02-000	EA	CONNECTOR - 3-WAY - FEMALE/SEALED
	118571-05-000	EA	LOCK - SECONDARY - FEMALE
	118571-06-000	EA	LOCK - SECONDARY - MALE
	118820-01-000	EA	INSULATOR - TERMINAL
	129233-01-000	EA	HOUSING - 2-POSITION/FEMALE - 280-SERIES
	131681-01-000	EA	CONNECTOR - 3/4" SO CORD - UL/CS
	137207-01-000	EA	HOUSING - PIN - 2 CAVITY/HIGH AMP
	137208-01-000	EA	HOUSING - SOCKET - 2 CAVITY/HIGH AMP
	137209-01-000	EA	PIN - CONNECTOR - 10 AWG/HIGH AMP
	137210-01-000	EA	SOCKET - CONNECTOR - 10 AWG/HIGH AMP
	142520-01-000	EA	TERMINAL - FEMALE - MINI-FIT 16
	142522-02-000	EA	HOUSING - 6 PIN/MALE - MINI FIT
	142522-04-000	EA	HOUSING - 10 PIN/MALE - MINI FIT
	142522-05-000	EA	HOUSING - 12 PIN/MALE - MINI FIT
	142522-06-000	EA	HOUSING - 14 PIN/MALE - MINI FIT
	142524-01-000	EA	HOUSING - 4 PIN/FEMALE - WEATHER PACK
	142524-02-000	EA	HOUSING - 4 PIN/FEMALE - WEATHER PACK
	144283-01-000	EA	CONNECTOR - 110V - F/USE WITH SOW WIRE - BLUE
	144283-02-000	EA	CONNECTOR - 110V - F/USE WITH NM ROMEX WIRE - CLEAR
	145171-01-000	EA	CONNECTOR - COAXIAL
	148335-01-000	EA	HOUSING - 8-POSITION/MALE - 280-GT SERIES
	148335-02-000	EA	HOUSING - 4-POSITION/MALE - 280-GT SERIES
	149686-01-000	EA	TERMINAL - .250 RECEPTACLE
	149687-01-000	EA	HOUSING - 2 POSITION/MALE - PACKARD
	149687-02-000	EA	LOCK - F/2 POSITION HOUSING - PACKARD
	149688-01-000	EA	TERMINAL - MALE - 16 GAUGE WIRE
	154799-01-000	EA	HOUSING - 4-POSITION/FEMALE - 150-SERIES
	154799-02-000	EA	LOCK - SECONDARY - 4 POSITION
	156035-01-000	EA	HOUSING - 12-POSITION/FEMALE - 280-GT SERIES
	156041-01-000	EA	TERMINAL - FEMALE - 16-12 - 280-GT SERIES
	156043-01-000	EA	HOUSING - 2-POSITION/FEMALE - 480-MP SERIES
	156043-02-000	EA	LOCK - F/2 POSITION HOUSING - 480 SERIES
	156044-01-000	EA	TERMINAL - FEMALE - 16-12 - 280-GT - F/SEALED HOUSING
	156045-01-000	EA	HOUSING - 10-POSITION/FEMALE - 280-GT SERIES
	156045-02-000	EA	HOUSING - 4-POSITION/FEMALE - 280-GT SERIES

COPYRIGHT © 2007 WINNEBAGO INDUSTRIES INC.

ELECTRICAL GROUP (CONTINUED)

CHASSIS

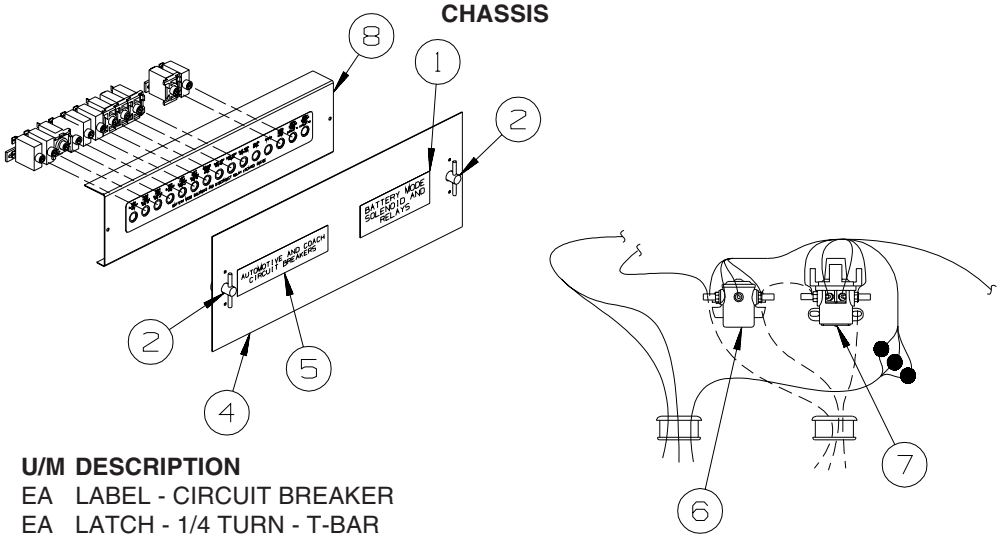

KEY	PART NUMBER	U/M	DESCRIPTION
1	093236-43-000	EA	LABEL - CIRCUIT BREAKER
2	098196-01-000	EA	LATCH - 1/4 TURN - T-BAR
3	098379-04-000	EA	LABEL - ELECTRICAL BOX - SIDE
4	109925-04-000	EA	DOOR - ELECTRICAL BOX - 6.9" X 18.5" - GM/FORD
	092492-11-000	EA	SEAL - ELECTRIC BOX - 7" X 18.4"
5	098379-01-000	EA	LABEL - CIRCUIT BREAKER - FRONT BOX
6	008188-01-000	EA	SOLENOID - 3 POST - BATTERY CHANGE OVER
7	086273-01-000	EA	RELAY - BATTERY DISCONNECT
8	118531-07-02B	EA	PLATE - CIRCUIT BREAKER - E-COATED

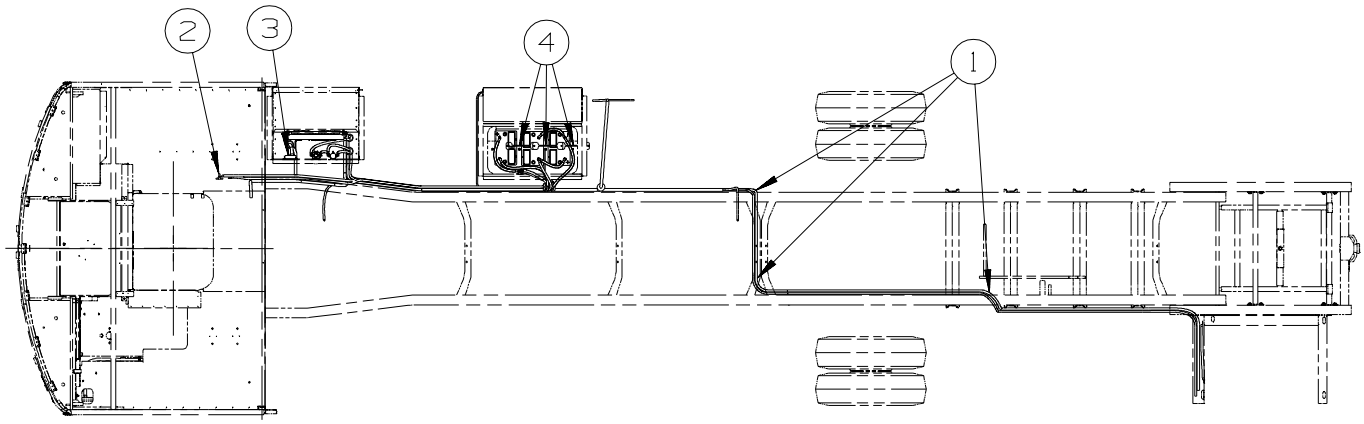

KEY	PART NUMBER	U/M	DESCRIPTION
1	113452-02-000	FT	SEAL/TRIM - FRONT - VINYL W/WIRE CARRIER - .027"
2	086233-01-000	EA	STUD - ISOLATED - 3/8" X 7/8" LONG
3	149825-01-000	EA	CONTROL MODULE - DIGISYNC/HIGH SPEED - F/C-BODY RAM
4	065450-05-000	EA	TIEDOWN - BATTERY - 8.4" TUBE
4	065451-05-000	EA	BRACKET/TIEDOWN - BATTERY - 7.7" FROM BRKT TO BRKT

COPYRIGHT © 2007 WINNEBAGO INDUSTRIES INC.

EXTERIOR BODY GROUP

GRAPHICS & PAINT

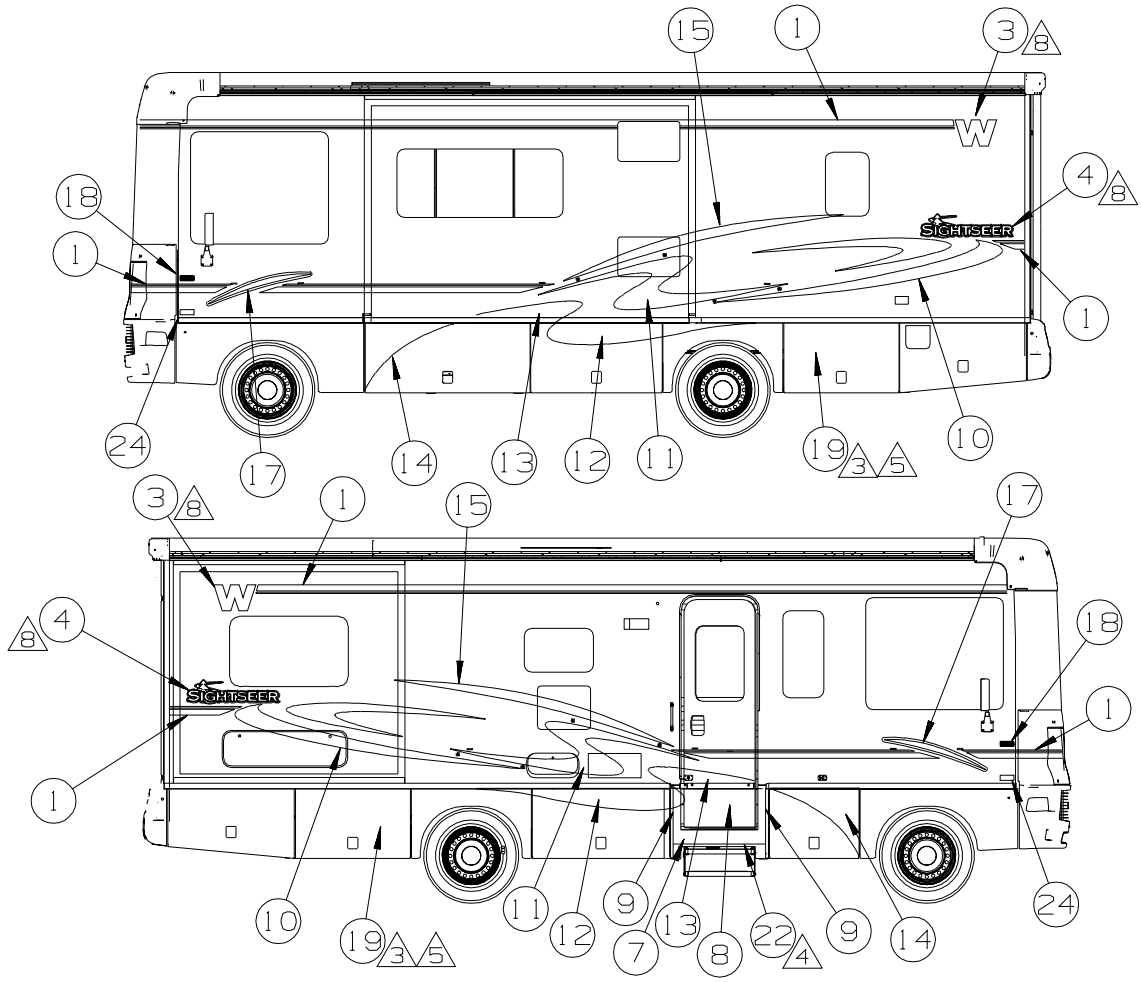

8. LOGO IS TO BE HELD TO ±1 MM ON HORIZONTAL PLANE (END TO END).

7. SPECIAL EDITION UNITS ONLY.

6. CENTER BETWEEN LADDER AND OUTSIDE OF COACH.

5. CLEAR COAT TO BE APPLIED ON PAINTED TO PROTECT PAINT.

4. FILM TO PROTECT BOTTOM OF DOOR FROM SCUFF MARKS.

3. PARTS BELOW FEATURE LINE WILL BE COLORED PRIOR TO ASSEMBLY.

2. CENTER ON UNIT.

1. APPLY PROTECTOR 116424-01 TO WATER HEATER LATCH.

NOTES:

(16H) FORD CHASSIS 18,000#/V10 ENG
(16M) FORD CHASSIS 20,500#/V10 ENG
(350) LADDER-EXTERIOR
(92K) EXTERIOR GRAPHICS PACKAGE #2
(27G) EXTERIOR GRAPHICS PACKAGE #1

COPYRIGHT © 2007 WINNEBAGO INDUSTRIES INC.

EXTERIOR BODY GROUP (CONTINUED)

GRAPHICS & PAINT (CONTINUED)

27G KEY	PART NUMBER	U/M	DESCRIPTION
1	10578I-99-CHT(02A)	FT	MULTISTRIPE-76.2M - MED PARCHMENT/DK CHERRY
2	120702-03-CHT(51A)	EA	DECAL-WINNEBAGO - DK CHERRY
3	135381-02-CHT(07A)	EA	DECAL-W - DK CHERRY
4	135453-03-CHT(03A)	EA	DECAL-SIGHTSEER,LG - BRT WHITE/DK CHERRY/MED PARCHMENT/BURGUNDY
5	135453-04-CHT(03A)	EA	DECAL-SIGHTSEER,SML - BRT WHITE/DK CHERRY/MED PARCHMENT/BURGUNDY
6	151687-01-CHT(01A)	EA	DECAL-BEZEL-DOMED,WINNEABGO - CHROME/PANTONE RED
7	138348-01-CHT(02A)	EA	DECAL-DOOR TRIM - MED PARCHMENT
8	138349-01-CHT(02A)	EA	DECAL-DOOR - MED PARCHMENT
9	139657-01-CHT(02A)	EA	DECAL-DOOR TRIM SIDE,RH - MED PARCHMENT
10	148521-01-CHT(02A)	EA	DECAL-SWIRL,RH - MED PARCHMENT/DK CHERRY
10	148521-02-CHT(02A)	EA	DECAL-SWIRL,LH - MED PARCHMENT/DK CHERRY
11	148523-01-CHT(02A)	EA	DECAL-S CURVE,RH - BURGUNDY
11	148523-02-CHT(02A)	EA	DECAL-S CURVE,LH - BURGUNDY
12	148524-01-CHT(01A)	EA	DECAL-PAINTLINE #3,RH - BRT WHITE
12	148524-02-CHT(01A)	EA	DECAL-PAINTLINE #3,LH - BRT WHITE
13	148525-01-CHT(02A)	EA	DECAL-PAINTLINE #2,RH - MED PARCHMENT
13	148525-02-CHT(02A)	EA	DECAL-PAINTLINE #2,LH - MED PARCHMENT
14	148526-01-CHT(01A)	EA	DECAL-PAINTLINE #1,RH - BRT WHITE
14	148526-02-CHT(01A)	EA	DECAL-PAINTLINE #1,LH - BRT WHITE
15	148528-01-CHT(02A)	EA	DECAL-SWEEP,RH - DK CHERRY
15	148528-02-CHT(02A)	EA	DECAL-SWEEP,LH - DK CHERRY
16	148531-01-CHT(02A)	EA	DECAL-HOOD & BACK - DK CHERRY/MED PARCHMENT/BURGUNDY
17	148532-01-CHT(02A)	EA	DECAL-SWEEP,SML,RH - BRT WHITE/BURGUNDY
17	148532-02-CHT(02A)	EA	DECAL-SWEEP,SML,LH - BRT WHITE/BURGUNDY
18	132664-02-CHT(01A)	EA	DECAL-WINNEBAGO,DOMED - CHROME/RED/BLACK
△3 → 19	XXXXXXXXXXXX	EA	COLORED PLASTIC AND STEEL - MED PARCHMENT
20	150691-01-CHT(02A)	EA	DECAL-FRT/RR STRIPE,RH - MED PARCHMENT/DK CHERRY
21	150691-02-CHT(02A)	EA	DECAL-FRT/RR STRIPE,LH - MED PARCHMENT/DK CHERRY
22	109506-01-000	EA	FILM-URETHANE PROTECTANT
23 ← △7	147534-01-CHT(01A)	EA	DECAL-SPECIAL EDITION - BLACK
16M 16H 24	129922-02-CHT(01A)	EA	EMBLEM-TRITON V10 - BLACK/SILVER MET/SILVER

92K KEY	PART NUMBER	U/M	DESCRIPTION
1	10578I-99-CHT(03A)	FT	MULTISTRIPE-76.2MM - TAUPE MIST/MOSS GREEN
2	120702-03-CHT(52A)	EA	DECAL-WINNEBAGO - MOSS GREEN
3	135381-02-CHT(08A)	EA	DECAL-W - DEEP FOREST GREEN
4	135453-03-CHT(04A)	EA	DECAL-SIGHTSEER,LG - BRT WHITE/DEEP FOREST GREEN/MED PARCHMENT/MOSS GREEN/DK TUNDRA
5	135453-04-CHT(04A)	EA	DECAL-SIGHTSEER,SML - BRT WHITE/DEEP FOREST GREEN/MED PARCHMENT/MOSS GREEN/DK TUNDRA
6	151687-01-CHT(01A)	EA	DECAL-BEZEL-DOMED - CHROME/PANTONE RED
7	138348-01-CHT(02A)	EA	DECAL-DOOR TRIM - MED PARCHMENT
8	138349-01-CHT(02A)	EA	DECAL-DOOR - MED PARCHMENT
9	139657-01-CHT(02A)	EA	DECAL-DOOR TRIM SIDE,RH - MED PARCHMENT
10	148521-01-CHT(03A)	EA	DECAL-SWIRL,RH - DEEP FOREST GREEN/DK TUNDRA
10	148521-02-CHT(03A)	EA	DECAL-SWIRL,LH - DEEP FOREST GREEN/DK TUNDRA
11	148523-01-CHT(03A)	EA	DECAL-S CURVE,RH - MOSS GREEN
11	148523-02-CHT(03A)	EA	DECAL-S CURVE,LH - MOSS GREEN
12	148524-01-CHT(01A)	EA	DECAL-PAINTLINE #3,RH - BRT WHITE
12	148524-02-CHT(01A)	EA	DECAL-PAINTLINE #3,LH - BRT WHITE
13	148525-01-CHT(02A)	EA	DECAL-PAINTLINE #2,RH - MED PARCHMENT
13	148525-02-CHT(02A)	EA	DECAL-PAINTLINE #2,LH - MED PARCHMENT
14	148526-01-CHT(01A)	EA	DECAL-PAINTLINE #1,RH - BRT WHITE
14	148526-02-CHT(01A)	EA	DECAL-PAINTLINE,#1,LH - BRT WHITE
15	148528-01-CHT(03A)	EA	DECAL-SWEEP,RH - TAUPE MIST
15	148528-02-CHT(03A)	EA	DECAL-SWEEP,LH - TAUPE MIST
16	148531-01-CHT(03A)	EA	DECAL-HOOD & BACK - DK TUNDRA/DEEP FOREST GREEN/MOSS GREEN
17	148532-01-CHT(03A)	EA	DECAL-SWEEP,SML,RH - BRT WHITE/MOSS GREEN
17	148532-02-CHT(03A)	EA	DECAL-SWEEP,SML,LH - BRT WHITE/MOSS GREEN
18	132664-02-CHT(01A)	EA	DECAL-WINNEBAGO,DOMED - CHROME/RED/BLACK
△3 → 19	XXXXXXXXXXXX	EA	COLORED PLASTIC AND STEEL - MED PARCHMENT
20	150691-01-CHT(03A)	EA	DECAL-FRT/RR STRIPE,RH - TAUPE MIST/MOSS GREEN
21	150691-02-CHT(03A)	EA	DECAL-FRT/RR STRIPE,LH - TAUPE MIST/MOSS GREEN
22	109506-01-000	EA	FILM-URETHANE PROTECTANT
23 ← △7	147534-01-CHT(01A)	EA	DECAL-SPECIAL EDITION - BLACK
16M 16H 24	129922-02-CHT(01A)	EA	EMBLEM-TRITON V10 - BLACK/SILVER MET/SILVER

COPYRIGHT © 2007 WINNEBAGO INDUSTRIES INC.

EXTERIOR BODY GROUP (CONTINUED)

GRAPHICS & PAINT (CONTINUED)

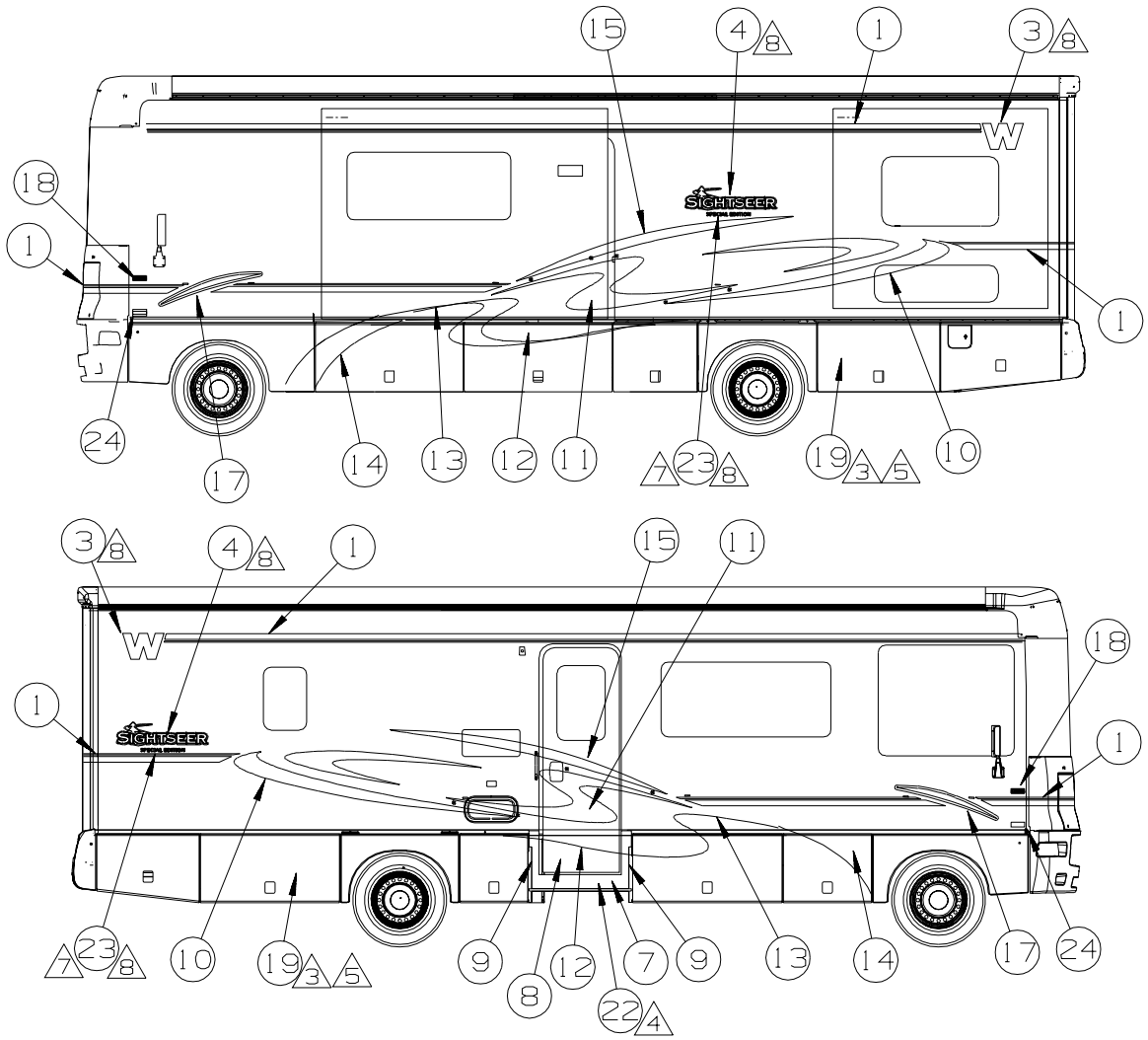

SPECIAL EDITION W/ 27G & 92K GRAPHICS PKG #1 & #2

NOTES:

1. APPLY PROTECTOR 116424-01 TO WATER HEATER LATCH.

2. CENTER ON UNIT.

3. PARTS BELOW FEATURE LINE WILL BE COLORED PRIOR TO ASSEMBLY.

4. FILM TO PROTECT BOTTOM OF DOOR FROM SCUFF MARKS.

5. CLEAR COAT TO BE APPLIED ON PAINTED TO PROTECT PAINT.

6. CENTER BETWEEN LADDER AND OUTSIDE OF COACH.

7. SPECIAL EDITION UNITS ONLY.

8. LOGO IS TO BE HELD TO ±1 MM ON HORIZONTAL PLANE (END TO END).

(16H) FORD CHASSIS 18,000#/V10 ENG

(16M) FORD CHASSIS 20,500#/V10 ENG

(350) LADDER-EXTERIOR

(92K) EXTERIOR GRAPHICS PACKAGE #2

(27G) EXTERIOR GRAPHICS PACKAGE #1

COPYRIGHT © 2007 WINNEBAGO INDUSTRIES INC.

EXTERIOR BODY GROUP (CONTINUED)

GRAPHICS & PAINT (CONTINUED)

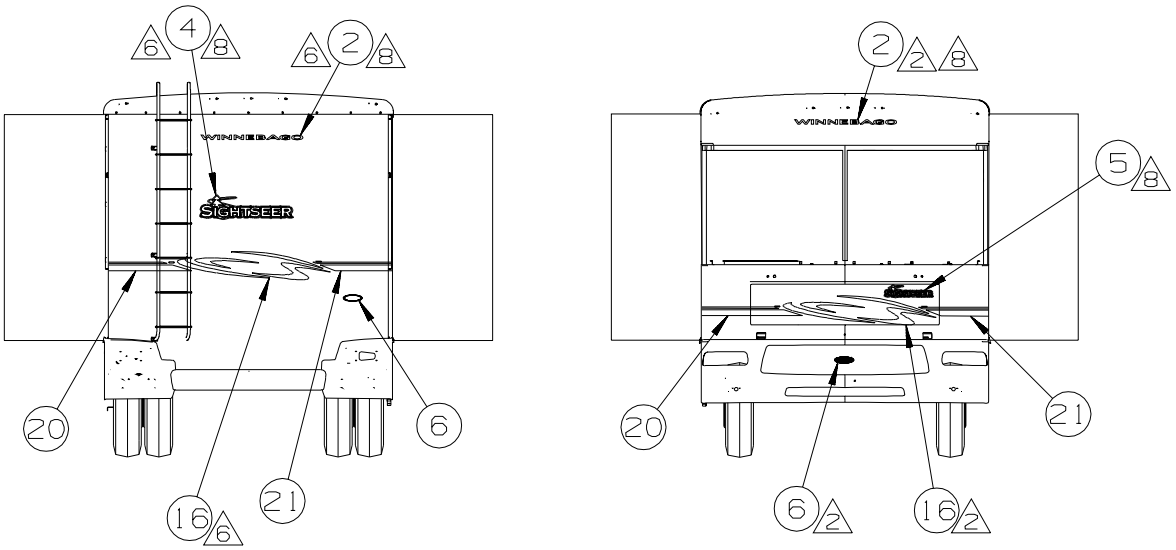

(27G) KEY	PART NUMBER	U/M	DESCRIPTION
1	105781-99-CHT(02A)	FT	MULTISTRIPE-76.2M - MED PARCHMENT/DK CHERRY
2	120702-03-CHT(51A)	EA	DECAL-WINNEBAGO - DK CHERRY
3	135381-02-CHT(07A)	EA	DECAL-W - DK CHERRY
4	135453-03-CHT(03A)	EA	DECAL-SIGHTSEER,LG - BRT WHITE/DK CHERRY/MED PARCHMENT/BURGUNDY
5	135453-04-CHT(03A)	EA	DECAL-SIGHTSEER,SML - BRT WHITE/DK CHERRY/MED PARCHMENT/BURGUNDY
6	151687-01-CHT(01A)	EA	DECAL-BEZEL-DOMED,WINNEABGO - CHROME/PANTONE RED
7	138348-01-CHT(02A)	EA	DECAL-DOOR TRIM - MED PARCHMENT
8	138349-01-CHT(02A)	EA	DECAL-DOOR - MED PARCHMENT
9	139657-01-CHT(02A)	EA	DECAL-DOOR TRIM SIDE,RH - MED PARCHMENT
10	148521-01-CHT(02A)	EA	DECAL-SWIRL,RH - MED PARCHMENT/DK CHERRY
10	148521-02-CHT(02A)	EA	DECAL-SWIRL,LH - MED PARCHMENT/DK CHERRY
11	148523-01-CHT(02A)	EA	DECAL-S CURVE,RH - BURGUNDY
11	148523-02-CHT(02A)	EA	DECAL-S CURVE,LH - BURGUNDY
12	148524-01-CHT(01A)	EA	DECAL-PAINTLINE #3,RH - BRT WHITE
12	148524-02-CHT(01A)	EA	DECAL-PAINTLINE #3,LH - BRT WHITE
13	148525-01-CHT(02A)	EA	DECAL-PAINTLINE #2,RH - MED PARCHMENT
13	148525-02-CHT(02A)	EA	DECAL-PAINTLINE #2,LH - MED PARCHMENT
14	148526-01-CHT(01A)	EA	DECAL-PAINTLINE #1,RH - BRT WHITE
14	148526-02-CHT(01A)	EA	DECAL-PAINTLINE #1,LH - BRT WHITE
15	148528-01-CHT(02A)	EA	DECAL-SWEEP,RH - DK CHERRY
15	148528-02-CHT(02A)	EA	DECAL-SWEEP,LH - DK CHERRY
16	148531-01-CHT(02A)	EA	DECAL-HOOD & BACK - DK CHERRY/MED PARCHMENT/BURGUNDY
17	148532-01-CHT(02A)	EA	DECAL-SWEEP,SML,RH - BRT WHITE/BURGUNDY
17	148532-02-CHT(02A)	EA	DECAL-SWEEP,SML,LH - BRT WHITE/BURGUNDY
18	132664-02-CHT(01A)	EA	DECAL-WINNEBAGO,DOMED - CHROME/RED/BLACK
△3 → 19	XXXXXXXXXXXX	EA	COLORED PLASTIC AND STEEL - MED PARCHMENT
20	150691-01-CHT(02A)	EA	DECAL-FRT/RR STRIPE,RH - MED PARCHMENT/DK CHERRY
21	150691-02-CHT(02A)	EA	DECAL-FRT/RR STRIPE,LH - MED PARCHMENT/DK CHERRY
22	109506-01-000	EA	FILM-URETHANE PROTECTANT
23 ← △7	147534-01-CHT(01A)	EA	DECAL-SPECIAL EDITION - BLACK
(16M)(16H) 24	129922-02-CHT(01A)	EA	EMBLEM-TRITON V10 - BLACK/SILVER MET/SILVER

(92K) KEY	PART NUMBER	U/M	DESCRIPTION
1	105781-99-CHT(03A)	FT	MULTISTRIPE-76.2MM - TAUPE MIST/MOSS GREEN
2	120702-03-CHT(52A)	EA	DECAL-WINNEBAGO - MOSS GREEN
3	135381-02-CHT(08A)	EA	DECAL-W - DEEP FOREST GREEN
4	135453-03-CHT(04A)	EA	DECAL-SIGHTSEER,LG - BRT WHITE/DEEP FOREST GREEN/MED PARCHMENT/MOSS GREEN/DK TUNDRA
5	135453-04-CHT(04A)	EA	DECAL-SIGHTSEER,SML - BRT WHITE/DEEP FOREST GREEN/MED PARCHMENT/MOSS GREEN/DK TUNDRA
6	151687-01-CHT(01A)	EA	DECAL-BEZEL-DOMED - CHROME/PANTONE RED
7	138348-01-CHT(02A)	EA	DECAL-DOOR TRIM - MED PARCHMENT
8	138349-01-CHT(02A)	EA	DECAL-DOOR - MED PARCHMENT
9	139657-01-CHT(02A)	EA	DECAL-DOOR TRIM SIDE,RH - MED PARCHMENT
10	148521-01-CHT(03A)	EA	DECAL-SWIRL,RH - DEEP FOREST GREEN/DK TUNDRA
10	148521-02-CHT(03A)	EA	DECAL-SWIRL,LH - DEEP FOREST GREEN/DK TUNDRA
11	148523-01-CHT(03A)	EA	DECAL-S CURVE,RH - MOSS GREEN
11	148523-02-CHT(03A)	EA	DECAL-S CURVE,LH - MOSS GREEN
12	148524-01-CHT(01A)	EA	DECAL-PAINTLINE #3,RH - BRT WHITE
12	148524-02-CHT(01A)	EA	DECAL-PAINTLINE #3,LH - BRT WHITE
13	148525-01-CHT(02A)	EA	DECAL-PAINTLINE #2,RH - MED PARCHMENT
13	148525-02-CHT(02A)	EA	DECAL-PAINTLINE #2,LH - MED PARCHMENT
14	148526-01-CHT(01A)	EA	DECAL-PAINTLINE #1,RH - BRT WHITE
14	148526-02-CHT(01A)	EA	DECAL-PAINTLINE,#1,LH - BRT WHITE
15	148528-01-CHT(03A)	EA	DECAL-SWEEP,RH - TAUPE MIST
15	148528-02-CHT(03A)	EA	DECAL-SWEEP,LH - TAUPE MIST
16	148531-01-CHT(03A)	EA	DECAL-HOOD & BACK - DK TUNDRA/DEEP FOREST GREEN/MOSS GREEN
17	148532-01-CHT(03A)	EA	DECAL-SWEEP,SML,RH - BRT WHITE/MOSS GREEN
17	148532-02-CHT(03A)	EA	DECAL-SWEEP,SML,LH - BRT WHITE/MOSS GREEN
18	132664-02-CHT(01A)	EA	DECAL-WINNEBAGO,DOMED - CHROME/RED/BLACK
△3 → 19	XXXXXXXXXXXX	EA	COLORED PLASTIC AND STEEL - MED PARCHMENT
20	150691-01-CHT(03A)	EA	DECAL-FRT/RR STRIPE,RH - TAUPE MIST/MOSS GREEN
21	150691-02-CHT(03A)	EA	DECAL-FRT/RR STRIPE,LH - TAUPE MIST/MOSS GREEN
22	109506-01-000	EA	FILM-URETHANE PROTECTANT
23 ← △7	147534-01-CHT(01A)	EA	DECAL-SPECIAL EDITION - BLACK
(16M)(16H) 24	129922-02-CHT(01A)	EA	EMBLEM-TRITON V10 - BLACK/SILVER MET/SILVER

COPYRIGHT © 2007 WINNEBAGO INDUSTRIES INC.

EXTERIOR BODY GROUP (CONTINUED)

GRAPHICS & PAINT (CONTINUED)

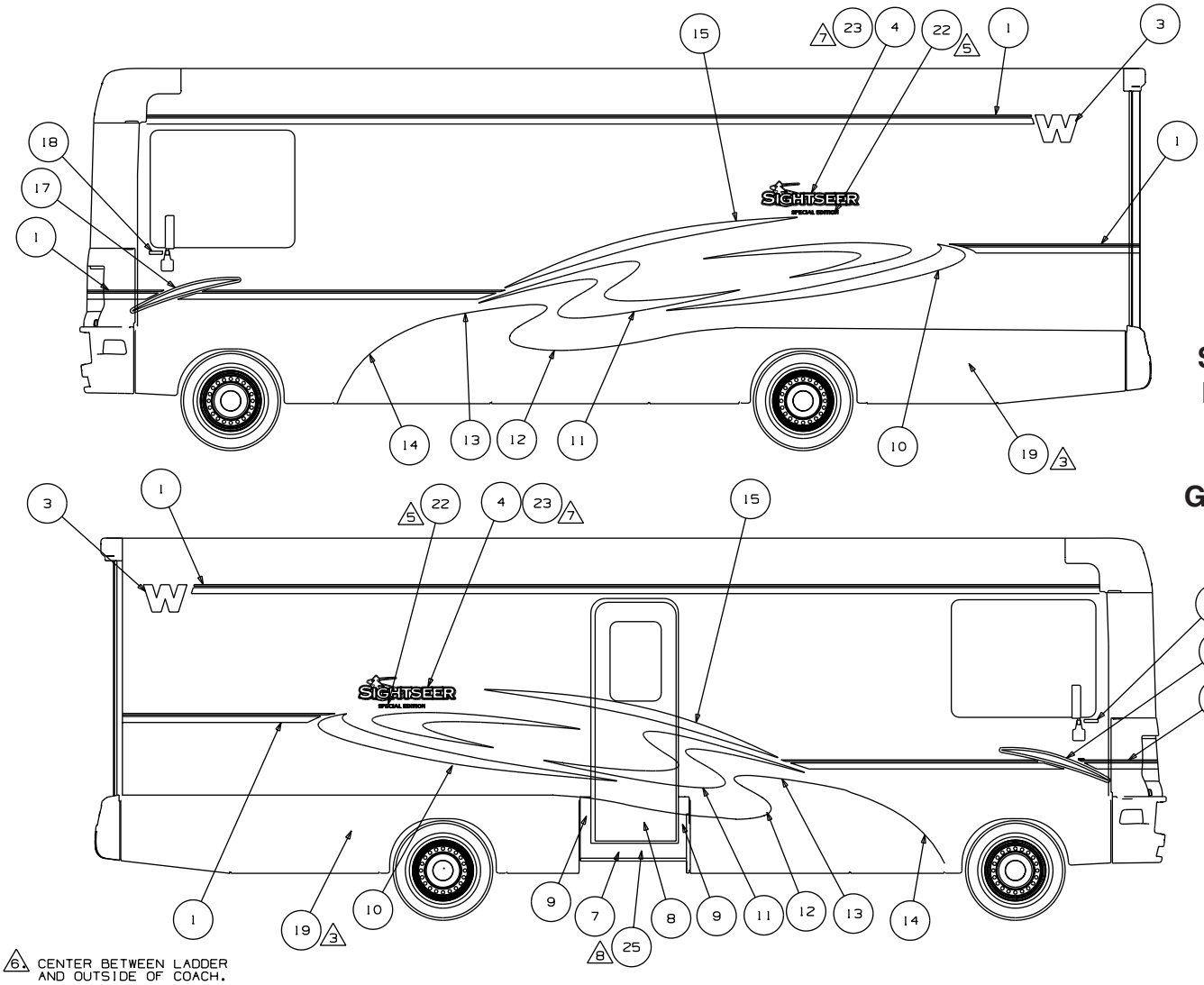

SPECIAL EDITION W/ 24E GRAPHICS PKG #3

NOTES:

6. CENTER BETWEEN LADDER AND OUTSIDE OF COACH.
5. SPECIAL EDITION UNITS ONLY.
4. CONTINUE MULTISTRIPE ONTO WINGWALLS OF SLIDEOUT.
3. PARTS BELOW FEATURE LINE WILL BE COLORED PRIOR TO ASSEMBLY.
2. CENTER ON UNIT.
1. APPLY PROTECTOR 116424-01 TO WATER HEATER LATCH.

8. FILM TO PROTECT BOTTOM OF DOOR FROM SCUFF MARKS.
7. DECAL WILL BE USED ON CHALET RENTAL UNITS INSTEAD OF SIGHTSEER DECAL, ALL OTHER PARTS SAME AS SIGHTSEER.

• 2006 CHALET RENTAL PROGRAM

KEY	PART NUMBER	U/M	DESCRIPTION (6)(2)
1	105781-99-CHT(01A)	FT	MULTISTRIPE-76.2MM - STONE GRAY/MED DK ROYAL BLUE
2	120702-03-CHT(11A)	EA	DECAL-WINNEBAGO - MED DK ROYAL BLUE
3	135381-02-CHT(03A)	EA	DECAL-W - MED DK ROYAL BLUE
4	135453-03-CHT(02A)	EA	DECAL-SIGHTSEER,LG - BRT WHITE/DK BRT TEAL/STONE GRAY/BLAZER BLUE/MED DK ROYAL BLUE
5	135453-04-CHT(02A)	EA	DECAL-SIGHTSEER,SML - BRT WHITE/DK BRT TEAL/STONE GRAY/BLAZER BLUE/MED DK ROYAL BLUE
6	137618-01-CHT(01A)	EA	DECAL-BEZEL,DOMED GRILLE LOGO - GOLD/BLACK
7	138348-01-CHT(01A)	EA	DECAL-DOOR TRIM - SANDSTONE
8	138349-01-CHT(01A)	EA	DECAL-DOOR - SANDSTONE
9	139657-01-CHT(01A)	EA	DECAL-DOOR TRIM SIDE,RH - SANDSTONE
10	148521-01-CHT(01A)	EA	DECAL-SWIRL,RH - MED DK ROYAL BLUE/STONE GRAY
10	148521-02-CHT(01A)	EA	DECAL-SWIRL,LH - MED DK ROYAL BLUE/STONE GRAY
11	148523-01-CHT(01A)	EA	DECAL-S CURVE,RH - BLAZER BLUE
11	148523-02-CHT(01A)	EA	DECAL-S CURVE,LH - BLAZER BLUE
12	148524-01-CHT(01A)	EA	DECAL-PAINT LINE #3,RH - BRT WHITE
12	148524-02-CHT(01A)	EA	DECAL-PAINT LINE #3,LH - BRT WHITE
13	148525-01-CHT(01A)	EA	DECAL-PAINT LINE #2,RH - SANDSTONE
13	148525-02-CHT(01A)	EA	DECAL-PAINT LINE #2,LH - SANDSTONE
14	148526-01-CHT(01A)	EA	DECAL-PAINT LINE #1,RH - BRT WHITE
14	148526-02-CHT(01A)	EA	DECAL-PAINT LINE #1,LH - BRT WHITE
15	148528-01-CHT(01A)	EA	DECAL-SWEEP,RH - STONE GRAY
15	148528-02-CHT(01A)	EA	DECAL-SWEEP,LH - STONE GRAY
16	148531-01-CHT(01A)	EA	DECAL-HOOD & BACK - STONE GRAY/MED DK ROYAL BLUE/BLAZER BLUE
17	148532-01-CHT(01A)	EA	DECAL-SWEEP,SML,RH - BRT WHITE/BLAZER BLUE
17	148532-02-CHT(01A)	EA	DECAL-SWEEP,SML,LH - BRT WHITE/BLAZER BLUE
18	132664-01-CHT(01A)	EA	DECAL-WINNEBAGO,DOMED - GOLD/CHROME/BLACK
(3)→ 19	XXXXXXXXXXXXXXXXX	EA	COLORED PLASTIC AND STEEL - SANDSTONE - DUPONT #4949U
20	150691-01-CHT(01A)	EA	DECAL-FRT/RR STRIPE,RH - STONE GRAY/MED DK ROYAL BLUE
21	150691-02-CHT(01A)	EA	DECAL-FRT/RR STRIPE,LH - STONE GRAY/MED DK ROYAL BLUE
22 ←(5)	147534-01-CHT(01A)	EA	DECAL-SPECIAL EDITION - BLACK
•(7)→ 23	129744-01-CHT(11A)	EA	DECAL-LOGO,CHALET,LG - BLAZER BLUE/MED DK ROYAL BLUE
24 ←(7)•	129744-02-CHT(11A)	EA	DECAL-LOGO,CHALET,SML - BLAZER BLUE/MED DK ROYAL BLUE
25	109506-01-000	EA	FILM-URETHANE PROTECTION

AFTER 07-18-05

KEY NUMBERS 7, 8, 9, & 13 END IN (02A) NOT (01A) AND ARE PARCHMENT NOT SANDSTONE

COPYRIGHT © 2007 WINNEBAGO INDUSTRIES INC.

EXTERIOR BODY GROUP (CONTINUED)

GRAPHICS & PAINT (CONTINUED)

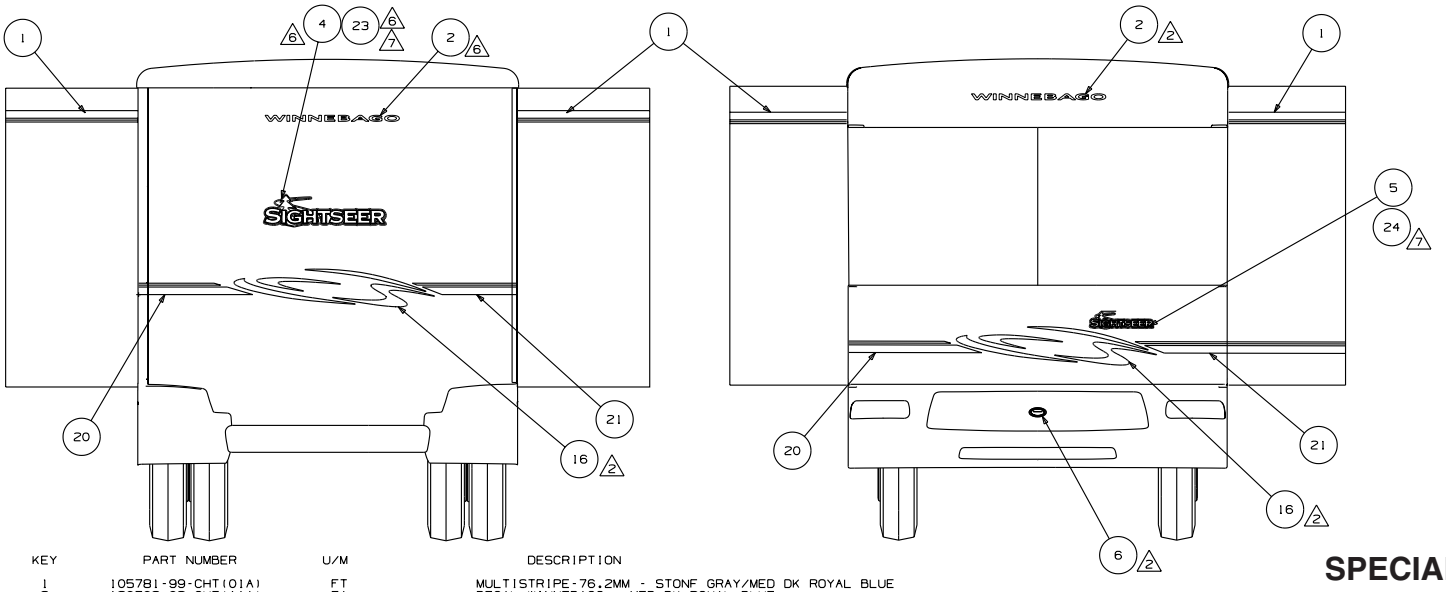

KEY	PART NUMBER	U/M	DESCRIPTION
1	105781-99-CHT(01A)	FT	MULTISTRIPE-76.2MM - STONE GRAY/MED DK ROYAL BLUE
2	120702-03-CHT(11A)	EA	DECAL-WINNEBAGO - MED DK ROYAL BLUE
3	135381-02-CHT(03A)	EA	DECAL-W - MED DK ROYAL BLUE
4	135453-03-CHT(02A)	EA	DECAL-SIGHTSEER,LG - BRT WHITE/DK BRT TEAL/STONE GRAY/BLAZER BLUE/MED DK ROYAL BLUE
5	135453-04-CHT(02A)	EA	DECAL-SIGHTSEER,SML - BRT WHITE/DK BRT TEAL/STONE GRAY/BLAZER BLUE/MED DK ROYAL BLUE
6	137618-01-CHT(01A)	EA	DECAL-BEZEL,DOMED GRILLE LOGO - GOLD/BLACK
7	138348-01-CHT(01A)	EA	DECAL-DOOR TRIM - SANDSTONE
8	138349-01-CHT(01A)	EA	DECAL-DOOR - SANDSTONE
9	139657-01-CHT(01A)	EA	DECAL-DOOR TRIM SIDE,RH - SANDSTONE
10	148521-01-CHT(01A)	EA	DECAL-SWIRL,RH - MED DK ROYAL BLUE/STONE GRAY
10	148521-02-CHT(01A)	EA	DECAL-SWIRL,LH - MED DK ROYAL BLUE/STONE GRAY
11	148523-01-CHT(01A)	EA	DECAL-S CURVE,RH - BLAZER BLUE
11	148523-02-CHT(01A)	EA	DECAL-S CURVE,LH - BLAZER BLUE
12	148524-01-CHT(01A)	EA	DECAL-PAINT LINE #3,RH - BRT WHITE
12	148524-02-CHT(01A)	EA	DECAL-PAINT LINE #3,LH - BRT WHITE
13	148525-01-CHT(01A)	EA	DECAL-PAINT LINE #2,RH - SANDSTONE
13	148525-02-CHT(01A)	EA	DECAL-PAINT LINE #2,LH - SANDSTONE
14	148526-01-CHT(01A)	EA	DECAL-PAINT LINE #1,RH - BRT WHITE
14	148526-02-CHT(01A)	EA	DECAL-PAINT LINE #1,LH - BRT WHITE
15	148528-01-CHT(01A)	EA	DECAL-SWEEP,RH - STONE GRAY
15	148528-02-CHT(01A)	EA	DECAL-SWEEP,LH - STONE GRAY
16	148531-01-CHT(01A)	EA	DECAL-HOOD & BACK - STONE GRAY/MED DK ROYAL BLUE/BLAZER BLUE
17	148532-01-CHT(01A)	EA	DECAL-SWEEP,SML,RH - BRT WHITE/BLAZER BLUE
17	149532-02-CHT(01A)	EA	DECAL-SWEEP,SML,LH - BRT WHITE/BLAZER BLUE
18	132664-01-CHT(01A)	EA	DECAL-WINNEBAGO,DOMED - GOLD/CHROME/BLACK
19	XXXXXXXXXXXXXXXXX	EA	COLORED PLASTIC AND STEEL - SANDSTONE - DUPONT #4949U
20	150691-01-CHT(01A)	EA	DECAL-FRT/RR STRIPE,RH - STONE GRAY/MED DK ROYAL BLUE
21	150691-02-CHT(01A)	EA	DECAL-FRT/RR STRIPE,LH - STONE GRAY/MED DK ROYAL BLUE
22	147534-01-CHT(01A)	EA	DECAL-SPECIAL EDITION - BLACK
23	129744-01-CHT(11A)	EA	DECAL-LOGO,CHALET,LG - BLAZER BLUE/MED DK ROYAL BLUE
24	129744-02-CHT(11A)	EA	DECAL-LOGO,CHALET,SML - BLAZER BLUE/MED DK ROYAL BLUE
25	109506-01-000	EA	FILM-URETHANE PROTECTION

SPECIAL EDITION W/ 24E GRAPHICS PKG #3

AFTER 07-18-05
KEY NUMBERS 7, 8, 9, & 13 END IN (02A) NOT (01A) AND ARE PARCHMENT NOT SANDSTONE

KEY	PART NUMBER	U/M	DESCRIPTION
	041561-03-000	EA	PAINT - 16 OUNCE SPRAY - OFF WHITE

DUPONT COLOR CODES ARE NOW FOUND IN THE PAINT CODE MANUAL.
YOU CAN FIND THIS MANUAL ON YOUR DEALER INDEX WEBPAGE UNDER SERVICE.

COPYRIGHT © 2007 WINNEBAGO INDUSTRIES INC.

EXTERIOR BODY GROUP (CONTINUED)

PANELS & TRIMS

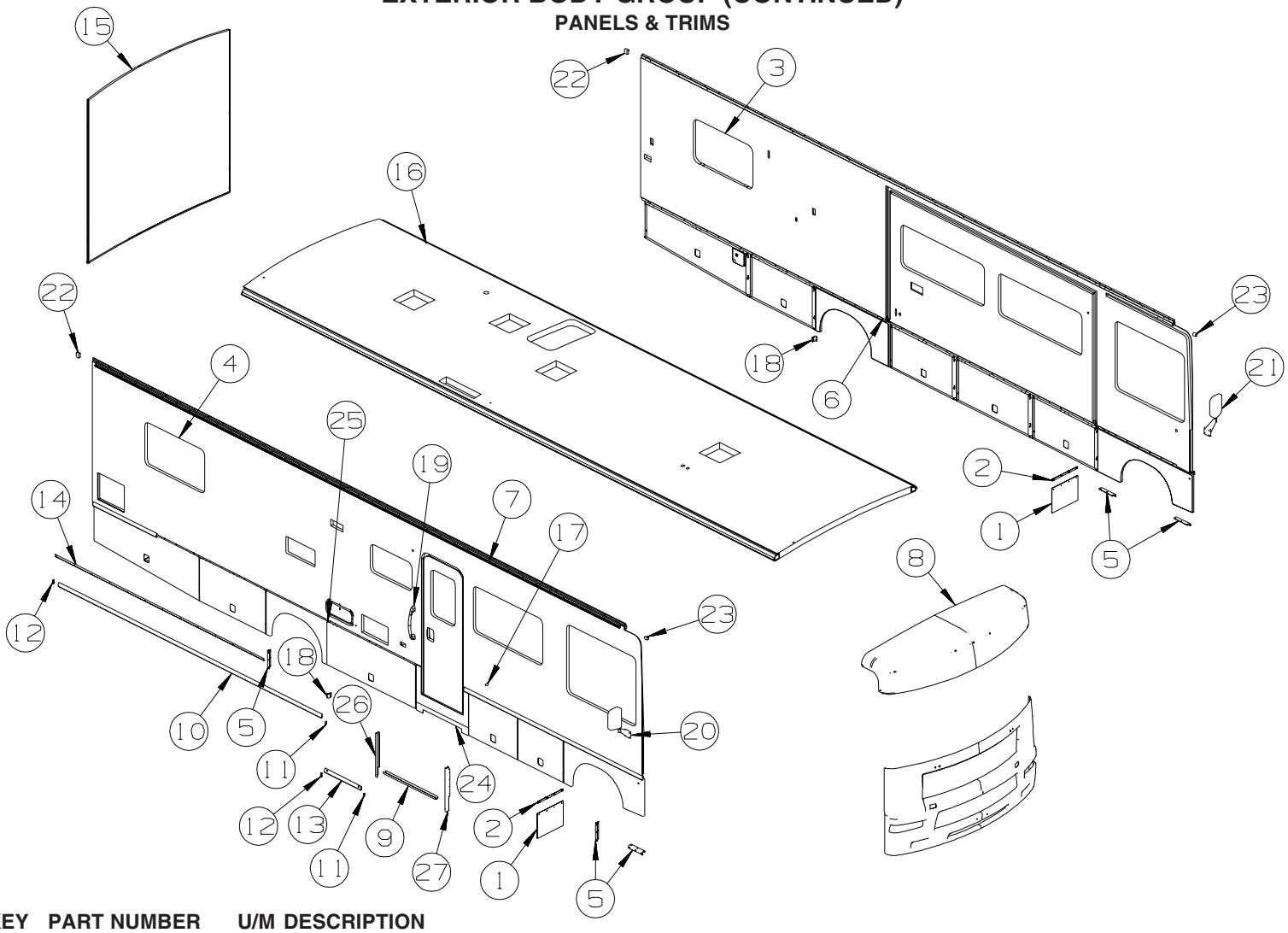

KEY	PART NUMBER	U/M	DESCRIPTION
1	017516-01-000	EA	MUD FLAP - 14"H X 18"W - W/O MOUNTING HOLES - BLACK
2	140922-01-02B	EA	PLATE - MUD FLAP - E-COATED
3	155929-01-T53	EA	SIDEWALL - DRIVER - W/O WINDOWS/TRIMS (T53, TL0)
3	155929-01-T54	EA	SIDEWALL - DRIVER - W/O WINDOWS/TRIMS (T54, TL1)
3	155929-01-TL2	EA	SIDEWALL - DRIVER - W/O WINDOWS/TRIMS (T55, TL2)
4	155928-01-T53	EA	SIDEWALL - PASSENGER - W/O WINDOWS/TRIMS (T53, TL0)
4	155928-01-T54	EA	SIDEWALL - PASSENGER - W/O WINDOWS/TRIMS (T54, TL1)
4	155928-01-TL2	EA	SIDEWALL - PASSENGER - W/O WINDOWS/TRIMS (T55, TL2)
5	113904-18-02B	EA	ANGLE - ATTACHMENT/WHEEL LIP - E-COATED
6	104692-01-000	FT	SEAL - ADHESIVE BACKED FOAM - 3/4" THICK X 3/4" WIDE X 25'
7	131483-01-01A	EA	RAIL - AWNING - 192" - BRIGHT WHITE - NOT ILLUSTRATED
			FROM: 00-00-00 THRU: 10-02-05
7	157284-01-01A	EA	RAIL - AWNING - 192" - BRIGHT WHITE
			FROM: 10-03-05 THRU: 99-99-99
8	138017-02-N21	EA	CAP - ROOF/FRONT SECTION - W/O LIGHTS/VENTS - W/WIRING
9	137599-05-04A	EA	TRIM - SIDEWALL/LOWER - 35.9" - PARCHMENT
10	146550-01-03A	EA	TRIM - COVER - SIDEWALL
11	146576-01-01A	EA	CAP - END/TRIM - RIGHT HAND
12	146576-02-01A	EA	CAP - END/TRIM - LEFT HAND- BRIGHT WHITE
13	149822-01-01A	EA	TRIM - SIDEWALL/ENTRY DOOR - 25.3" - BRIGHT WHITE
14	146548-01-01A	EA	TRIM - RETAINER
15	P53086-01-T53	EA	BACKWALL - W/O WINDOW/TRIMS (T53, TL0)
15	P53086-01-T54	EA	BACKWALL - W/O WINDOW/TRIMS (T54, TL1)
15	P53086-01-T55	EA	BACKWALL - W/O WINDOW/TRIMS (T55, TL2)
16	155930-01-T53	EA	ROOF - W/O LIGHTS/VENTS - W/WIRING
17	120863-02-000	EA	BUMPER - RUBBER/RADIUS TOP - 1" X 1 1/2"
18	113904-19-02B	EA	ANGLE - ATTACHMENT/WHEEL LIP - E-COATED
19	152854-01-01A	EA	HANDLE - ASSIST - WHITE W/BLACK RUBBER GRIP - 18 5/8"

COPYRIGHT © 2007 WINNEBAGO INDUSTRIES INC.

EXTERIOR BODY GROUP (CONTINUED)

PANELS & TRIMS (CONTINUED)

KEY	PART NUMBER	U/M	DESCRIPTION
20*	106015-14-01A	EA	MIRROR - EXTERIOR ADJUSTABLE GLASS - PASSENGER
20*	106015-12-01A	EA	MIRROR - EXTERIOR REMOTE/HEAT - PASSENGER - MIRRORS EXTERIOR W/DEFROST
21*	106015-15-01A	EA	MIRROR - EXTERIOR ADJUSTABLE GLASS - DRIVER
21*	106015-13-01A	EA	MIRROR - EXTERIOR REMOTE/HEAT - DRIVER - MIRRORS EXTERIOR W/DEFROST
22	156094-01-000	EA	FOAM - PLUG - SIDEWALL TUBE
23	156094-02-000	EA	FOAM - PLUG - SIDEWALL TUBE
24	121117-04-03A	EA	ANGLE - W/O SLOTS - 4.3" X 4.6" - PARCHMENT - NOT ILLUSTRATED
			FROM: 00-00-00 THRU: 01-08-06
24	138021-05-18B	EA	PANEL-TRIM MED PARCH
			FROM: 01-09-06 THRU: 99-99-99
25	153498-01-01A	EA	BUMPER - RUBBER - WHITE
26	133100-02-04A	EA	TRIM - SIDEWALL - 24.5" - PARCHMENT
27	133100-01-04A	EA	TRIM - SIDEWALL - 24.5" - PARCHMENT

***COMPONENT PARTS LISTED LATER IN THIS GROUP**

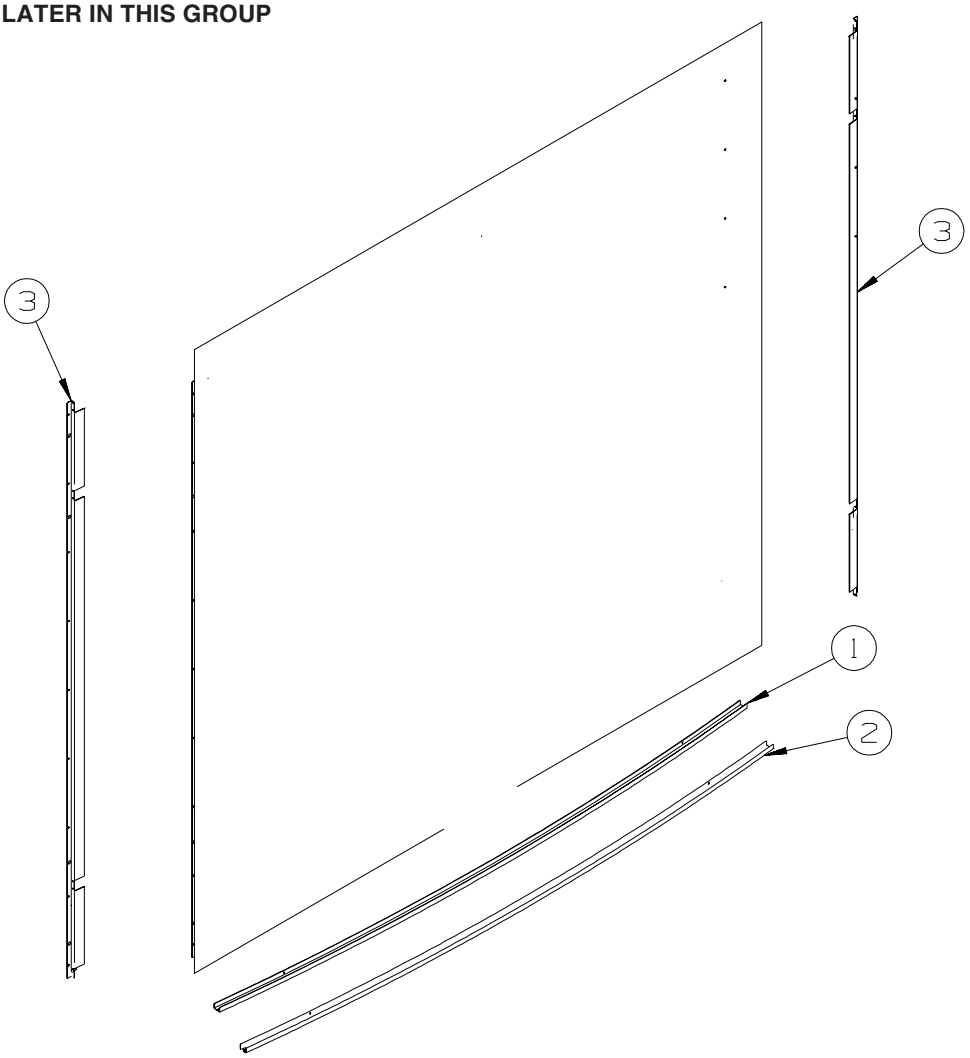

BACKWALL

KEY	PART NUMBER	U/M	DESCRIPTION
1	140118-01-01A	EA	TRIM - BACKWALL - LOWER - 98.3" - BRIGHT WHITE
2	114248-02-01A	EA	ANGLE - PLASTIC - .7” X .4” X 96.7" - MODERN IVORY
3	135270-01-02B	EA	BRACKET/Z - BACKWALL MOUNT - E-COAT

COPYRIGHT © 2007 WINNEBAGO INDUSTRIES INC.

EXTERIOR BODY GROUP (CONTINUED)

PANELS & TRIMS (CONTINUED)

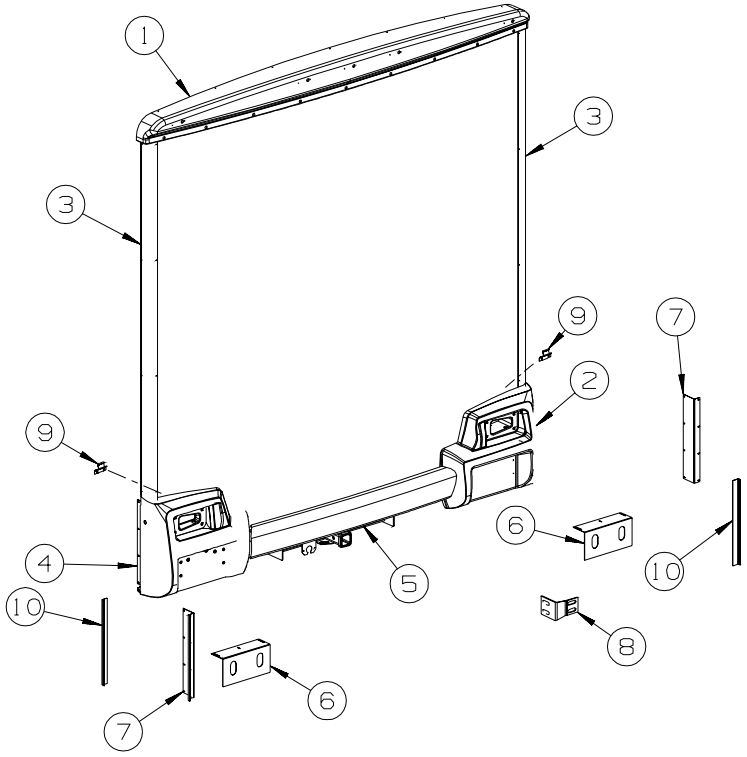

	D26P	D29R	D30B	D33T	D34A	D35N
16H & 16M	- - -	138162-01-cht 138162-02-cht	138162-03-cht 138162-04-cht	138162-03-cht 138162-04-cht	138162-03-cht 138162-04-cht	138162-03-cht 138162-04-cht
1PM & 1PN	- - -	138162-01-cht 138162-02-cht	138162-01-cht 138162-02-cht	...	138162-03-cht 138162-04-cht	138162-03-cht 138162-04-cht
1PJ & 1PL	138162-01-cht 138162-02-cht	138162-01-cht 138162-02-cht	138162-03-cht 138162-04-cht	138162-03-cht 138162-04-cht	...	...

(16H) FORD CHASSIS 18,000 LB
(16M) FORD CHASSIS 20,500 LB
(1PM) WORKHORSE 18,000 LB (P32)
(1PN) WORKHORSE 20,7000 LB (P32)
(1PJ) WORKHORSE 16,000 LB (W16)
(1PL) WORKHORSE 18,000 LB (W18)

KEY	PART NUMBER	U/M	DESCRIPTION
1	137582-02-N21	EA	CAP - REAR/ROOF - W/O LIGHTS/VENTS - W/WIRING - BRIGHT WHT
2	138054-03-T53	EA	TRIM - BACKWALL - LOWER/RIGHT HAND - PARCHMENT
2	138054-03-N21	EA	TRIM - BACKWALL - LOWER/RIGHT HAND - SANDSTONE - SPECIAL EDITIONS FROM: 00-00-00 THRU: 07-18-05
2	138054-03-T53	EA	TRIM - BACKWALL - LOWER/RIGHT HAND - PARCHMENT - SPECIAL EDITIONS FROM: 07-19-05 THRU: 99-99-99
3	139969-01-02A	EA	COVE - BACKWALL - BRIGHT WHITE
4	138054-04-T53	EA	TRIM - BACKWALL - LOWER/LEFT HAND - PARCHMENT
4	138054-04-N21	EA	TRIM - BACKWALL - LOWER/LEFT HAND - SANDSTONE - SPECIAL EDITIONS FROM: 00-00-00 THRU: 07-18-05
4	138054-04-T53	EA	TRIM - BACKWALL - LOWER/LEFT HAND - PARCHMENT - SPECIAL EDITIONS FROM: 07-19-05 THRU: 99-99-99
5	138055-02-T53	EA	PANEL - BUMPER/REAR - W/O HARDWARE - PARCHMENT
5	138055-02-N21	EA	PANEL - BUMPER/REAR - W/O HARDWARE - SANDSTONE - SPECIAL EDITIONS FROM: 00-00-00 THRU: 07-18-05
5	138055-02-T53	EA	PANEL - BUMPER/REAR - W/O HARDWARE - PARCHMENT - SPECIAL EDITIONS FROM: 07-19-05 THRU: 99-99-99
6	139870-01-02B	EA	BRACKET - MOUNT - TRIM - LOWER - E-COATED
7	139811-01-02B	EA	SEAL PLANE/ANGLE MOUNT FILLER (SIDEWALL/BACKWALL ATTACH)
8		EA	SEE TABLE FOR BRACKET/BUMPER
9	073050-04-000	EA	CLIP/MOUNTING - VALANCE PANEL
10	132721-02-02B	EA	BRACKET/MOUNT - TRIM - REAR - E-COATED

COPYRIGHT © 2007 WINNEBAGO INDUSTRIES INC.

EXTERIOR BODY GROUP (CONTINUED)

COMPONENT PARTS FOR PANELS & TRIMS

106015-12-01A

KEY	PART NUMBER	U/M	DESCRIPTION	VENDOR NO.
	106015-12-700	EA	MIRROR-FLAT-W/W/O HEAT	709448
	106015-12-701	EA	MIRROR-CONVEX - W/W/O HEAT	709449
	106015-12-702	EA	CAP/SCREW - (PKG OF 4) - BLK	748329 RND
	106015-12-703	EA	CONVEX GLASS/HANDSET/HOUSING	7095892
	106015-19-701	EA	GLASS/FLAT-W/BEZEL/HEAT/ANTI	709644
	119774-09-700	EA	PLATE-INNER SUPT/MIRROR HEAD	709418-7RH
	131431-01-701	EA	MOTOR	7475400

106015-13-01A

KEY	PART NUMBER	U/M	DESCRIPTION	VENDOR NO.
	106015-12-700	EA	MIRROR-FLAT-W/W/O HEAT	709448
	106015-12-701	EA	MIRROR-CONVEX - W/W/O HEAT	709449
	106015-12-702	EA	CAP/SCREW - (PKG OF 4) - BLK	748329 RND
	106015-12-703	EA	CONVEX GLASS/HANDSET/HOUSING	7095892
	106015-19-701	EA	GLASS/FLAT-W/BEZEL/HEAT/ANTI	709644
	119774-09-701	EA	PLATE INNER SUPT/MIRROR HEAD	709419-7LH
	131431-01-701	EA	MOTOR	7475400

106015-14-01A

KEY	PART NUMBER	U/M	DESCRIPTION	VENDOR NO.
	106015-12-700	EA	MIRROR-FLAT-W/W/O HEAT	709448
	106015-12-701	EA	MIRROR-CONVEX - W/W/O HEAT	709449
	106015-12-702	EA	CAP/SCREW - (PKG OF 4) - BLK	748329 RND
	106015-12-703	EA	CONVEX GLASS/HANDSET/HOUSING	7095892
	106015-19-701	EA	GLASS/FLAT-W/BEZEL/HEAT/ANTI	709644
	119774-09-700	EA	PLATE-INNER SUPT/MIRROR HEAD	709418-7RH

106015-15-01A

KEY	PART NUMBER	U/M	DESCRIPTION	VENDOR NO.
	106015-12-700	EA	MIRROR-FLAT-W/W/O HEAT	709448
	106015-12-701	EA	MIRROR-CONVEX - W/W/O HEAT	709449
	106015-12-702	EA	CAP/SCREW - (PKG OF 4) - BLK	748329 RND
	106015-12-703	EA	CONVEX GLASS/HANDSET/HOUSING	7095892
	106015-19-701	EA	GLASS/FLAT-W/BEZEL/HEAT/ANTI	709644
	119774-09-701	EA	PLATE INNER SUPT/MIRROR HEAD	709419-7LH

COPYRIGHT © 2007 WINNEBAGO INDUSTRIES INC.

EXTERIOR BODY GROUP (CONTINUED)

FRONT END

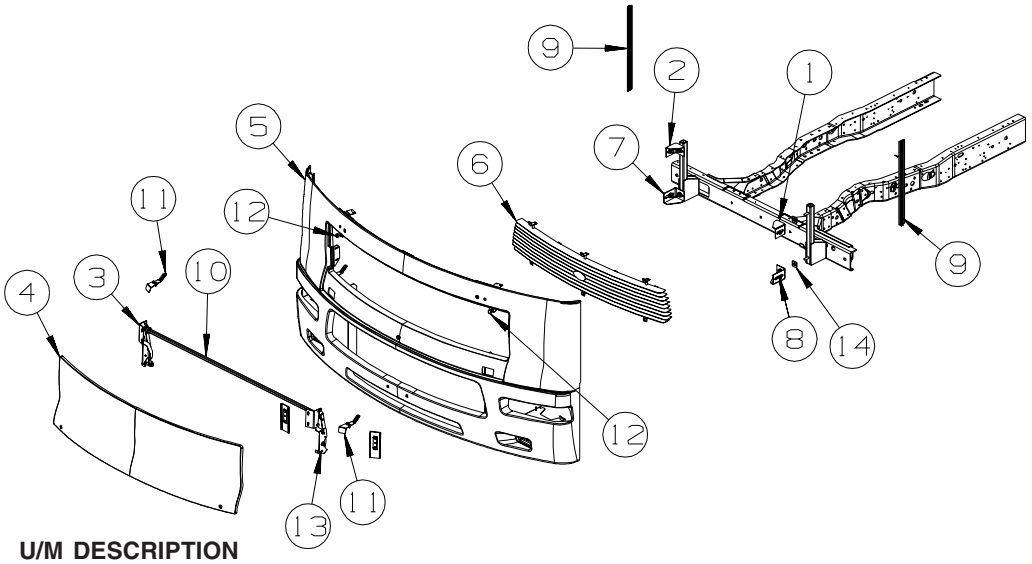

KEY	PART NUMBER	U/M	DESCRIPTION
1	128455-06-02B	EA	BRACKET - BUMPER - E-COATED
2	128455-05-02B	EA	BRACKET - BUMPER - E-COATED
3	137072-03-01A	EA	HINGE - HOOD - RIGHT HAND - BLACK
4	137590-01-N21	EA	HOOD - FRONT
5	147557-02-S28	EA	PANEL - FRONT/LOWER
6	137913-08-01A	EA	GRILLE - FRONT/UPPER - PARCHMENT
6	137913-08-02A	EA	GRILLE - FRONT/UPPER - SANDSTONE - SPECIAL EDITION FROM: 00-00-00 THRU: 07-18-05
6	137913-08-01A	EA	GRILLE - FRONT/UPPER - PARCHMENT - SPECIAL EDITION FROM: 07-19-05 THRU: 99-99-99
7	128455-02-02B	EA	BRACKET - BUMPER - E-COATED
8	128455-01-02B	EA	BRACKET - BUMPER - E-COATED
9	092041-10-01A	EA	TRIM - FRONT/REAR CAP (SIDEWALL) - 25.2" - BRIGHT WHITE
9	091985-01-07A	FT	INSERT - TRIM - REAR CAP TO SIDEWALL - .66" - BRIGHT WHITE
10	137300-01-02B	EA	TUBE/TIMING - HOOD - 63.2" - E-COATED - WORKHORSE
10	154091-02-02B	EA	TUBE/TIMING - HOOD - E-COATED - FORD FROM: 00-00-00 THRU: 01-30-05
10	154091-05-02B	EA	TUBE/TIMING - HOOD - E-COATED - FORD FROM: 01-31-05 THRU: 99-99-99
11	141017-01-02B	EA	SUPPORT/HINGE - FRONT - E-COATED
12	058786-01-000	EA	BOLT - HOOD ADJUSTMENT - 5/16"-18 X 1.5"-2"- W/BLACK PAD
13	137072-04-01A	EA	HINGE - HOOD - LEFT HAND - BLACK FROM: 00-00-00 THRU: 10-28-05
13	137072-14-01A	EA	HINGE - HOOD - DRIVER - BLACK FROM: 10-29-05 THRU: 99-99-99
14	116617-02-02B	EA	SPACER - BUMPER

COPYRIGHT © 2007 WINNEBAGO INDUSTRIES INC.

EXTERIOR BODY GROUP (CONTINUED)

FRONT END (CONTINUED)

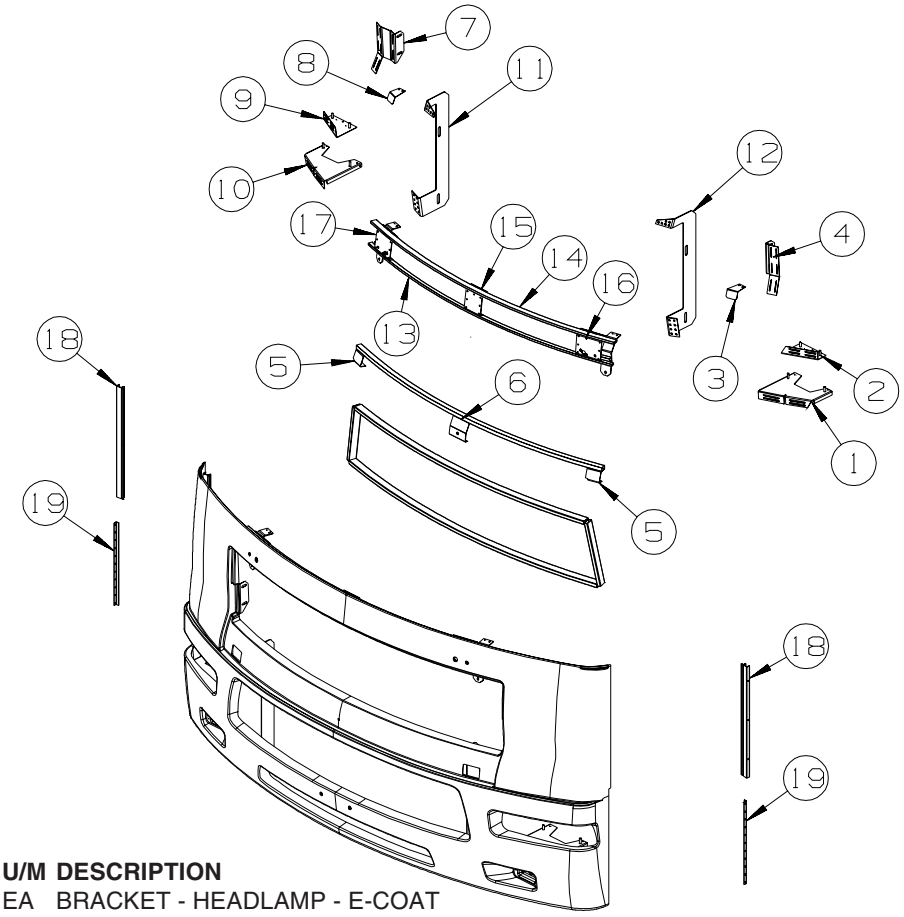

KEY	PART NUMBER	U/M	DESCRIPTION
1	147895-04-02B	EA	BRACKET - HEADLAMP - E-COAT
2	147894-04-02B	EA	BRACKET - HEADLAMP - E-COAT
3	141018-02-02B	EA	BRACKET/HINGE - FRONT/DRIVER - E-COATED
4	134530-06-02B	EA	SUPPORT - HOOD LINK - E-COATED
5	137679-01-02B	EA	STRIKE - HOOD LATCH - E-COATED
6	133770-02-02B	EA	BRACKET - HOOD SUPPORT - E-COATED
7	134530-05-02B	EA	SUPPORT - HOOD LINK - E-COATED
8	141018-01-02B	EA	BRACKET/HINGE - FRONT/PASSENGER - E-COATED
9	147894-02-02B	EA	BRACKET - HEADLAMP - E-COAT
10	147895-02-02B	EA	BRACKET - HEADLAMP - E-COAT
11	137591-03-02B	EA	BRACKET - FRONT MOUNT/RIGHT HAND - E-COATED
12	137591-04-02B	EA	BRACKET - FRONT MOUNT/LEFT HAND - E-COATED
13	134066-04-02B	EA	BRACKET - ZEE - W/HOLES - E-COATED
14	132864-01-01A	EA	SUPPORT - FRONT/INNER PANEL TRIM
15	149784-03-S46	EA	SUPPORT - WIPER
16	149788-08-02B	EA	SUPPORT - PIVOT SHAFT - E-COATED
17	125849-02-02A	EA	BRACE-WIPER/HOOD - BLACK
18	132864-01-01A	EA	SUPPORT - FRONT/INNER PANEL TRIM
19	134066-04-02B	EA	BRACKET - ZEE - W/HOLES - E-COATED

COPYRIGHT © 2007 WINNEBAGO INDUSTRIES INC.

EXTERIOR BODY GROUP (CONTINUED)

LADDER

KEY	PART NUMBER	U/M	DESCRIPTION
	129639-03-01A	EA	LADDER - 89" - 7 STEP - BRUSHED ALUMINUM
	130163-06-01A	EA	LADDER EXTENSION/LOWER - 24.4" - 2 STEP - BRUSHED ALUMINUM

STRUCTURAL COMPONENTS

KEY	PART NUMBER	U/M	DESCRIPTION
	002726-01-001	EA	GARNISH - U-CHANNEL - 1.38" X 19' - SERRATED
	076054-X9-000	EA	FIBERGLASS SHEET - 22.1" X 70.6" - BRIGHT WHITE
	077517-62-000	EA	FIBERGLASS SHEET - 48" X 96" - BRIGHT WHITE
	089297-01-000	SF	PLYWOOD - LUAN - OVERLAY GRADE - 4' X 8'
	100619-01-000	BF	FOAM - EXPANDED POLYSTYRENE - 1.34" X 48" X 96"
	100619-02-000	BF	FOAM - EXPANDED POLYSTYRENE - 1.5" X 48" X 96"
	100619-04-000	BF	FOAM - EXPANDED POLYSTYRENE - .5" X 48" X 96"
	100619-05-000	BF	FOAM - EXPANDED POLYSTYRENE - .75" X 48" X 96"-1.5"DENSITY
	100619-16-000	BF	FOAM - EXPANDED POLYSTYRENE - .75" X 48" X 96"-2" DENSITY
	100619-27-000	BF	FOAM - EXPANDED POLYSTYRENE - 3" X 48" X 92.8"
	108535-05-03A	SF	FIBERGLASS SHEET - 108" X 500' ROLL - BRIGHT WHITE
	116942-03-01A	LB	ALUMINUM - .7" X 40" X 158"
	120107-01-000	EA	FOAM - ROOF COVE - 2.8" X 96" LONG
	120107-02-000	EA	FOAM - PLUG - ROOF TUBE - 2.2" X 2.9" X 1.8" LONG
	120107-03-000	EA	FOAM - PLUG - SIDEWALL TUBE - 1.2" X 2.1" X 1.8" LONG
	148884-03-01A	EA	FIBERGLASS SHEET - 96.7" X 355.7" - HIGH GLOSS
	148884-04-01A	EA	FIBERGLASS SHEET - 99.5" X 100.2" - HIGH GLOSS
	148884-10-01A	EA	FIBERGLASS SHEET - 22.1" X 68.2" - HIGH GLOSS-BRIGHT WHITE
	148884-11-01A	EA	FIBERGLASS SHEET - 26.1" X 68.2" - HIGH GLOSS
	148884-13-01A	EA	FIBERGLASS SHEET - 78.9" X 309.4" - HIGH GLOSS
	148884-15-01A	EA	FIBERGLASS SHEET - 78.9" X 372.1" - HIGH GLOSS
	148884-16-01A	EA	FIBERGLASS SHEET - 78.9" X 396.1" - HIGH GLOSS
	148884-20-01A	EA	FIBERGLASS SHEET - 4" X 93.8" - HIGH GLOSS - BRIGHT WHITE
	148884-22-01A	EA	FIBERGLASS SHEET - 47.9" X 95.8" - HIGH GLOSS-BRIGHT WHITE
	148884-27-01A	EA	FIBERGLASS SHEET - 25" X 48" - HIGH GLOSS
	148884-24-01A	EA	FIBERGLASS SHEET - 78.9" X 330.2" - HIGH GLOSS-BRIGHT WHITE

COPYRIGHT © 2007 WINNEBAGO INDUSTRIES INC.

EXTERIOR BODY GROUP (CONTINUED)

AWNINGS

SIGHTSEER PATIO AWNINGS

FEATURE COLOR	MODEL	COLOR DESIGNATION	AWNING FABRIC	AWNING LENGTH	WEATHER WRAP(MANUAL)	PART # MANUAL	VENDOR
27G	D26P	BURGUNDY ROSE (DZ)	VINYL	11.5'	VYL/BRT WHT	113874-03-49A	A&E
CHERRY &	D29R	BURGUNDY ROSE (DZ)	VINYL	16'	VYL/BRT WHT	113874-06-49A	A&E
BURGUNDY	D30B	BURGUNDY ROSE (DZ)	VINYL	16'	VYL/BRT WHT	113874-06-49A	A&E
	D33T	BURGUNDY ROSE (DZ)	VINYL	18'	VYL/BRT WHT	113874-07-49A	A&E
	D34A	BURGUNDY ROSE (DZ)	VINYL	18'	VYL/BRT WHT	153692-02-49A	A&E
	D35N	BURGUNDY ROSE (DZ)	VINYL	16'	VYL/BRT WHT	113874-06-49A	A&E
	D26P	MOSS TRANSITIONAL (EV)	VINYL	11.5'	VYL/BRT WHT	113874-03-47A	A&E
92K	D29R	MOSS TRANSITIONAL (EV)	VINYL	16'	VYL/BRT WHT	113874-06-47A	A&E
GREEN &	D30B	MOSS TRANSITIONAL (EV)	VINYL	16'	VYL/BRT WHT	113874-06-47A	A&E
TAUPE	D33T	MOSS TRANSITIONAL (EV)	VINYL	18'	VYL/BRT WHT	113874-07-47A	A&E
	D34A	MOSS TRANSITIONAL (EV)	VINYL	18'	VYL/BRT WHT	153692-02-47A	A&E
	D35N	MOSS TRANSITIONAL (EV)	VINYL	16'	VYL/BRT WHT	113874-06-47A	A&E
24E	D26P	N/A					
BLUE,	D29R	GULF BLUE	VINYL	16'	VYL/BRT WHT	113874-06-50A	A&E
STONE GRAY	D30B	GULF BLUE	VINYL	16'	VYL/BRT WHT	113874-06-50A	A&E
	D33T	N/A					
	D34A	N/A					
	D35N	N/A					

KEY	PART NUMBER	U/M	DESCRIPTION
*	113874-01-02A	EA	HARDWARE KIT - AWNING - W/O STANDOFF BRACKET-BRIGHT WHITE
	153692-01-01A	EA	HARDWARE KIT - F/2 STEP (STANDARD) - BRIGHT WHITE - D34A
	113874-11-01A	EA	SCREW/LAG - AWNING - 1/4" X 1" STAINLESS STEEL
	113874-12-01A	EA	SCREW/LAG - AWNING - 1/4" X 2 3/4" STAINLESS STEEL
	137054-01-02A	EA	BRACKET - AWNING - BRIGHT WHITE
	146457-02-03A	EA	BRACKET - AWNING - BRIGHT WHITE - D34A
	143181-11-01A	EA	AWNING/WEATHERPROOF - SPACER KIT - BRIGHT WHITE - D34A

***COMPONENT PARTS LISTED LATER IN THIS GROUP**

COPYRIGHT © 2007 WINNEBAGO INDUSTRIES INC.

EXTERIOR BODY GROUP (CONTINUED)

COMPONENT PARTS FOR AWNINGS

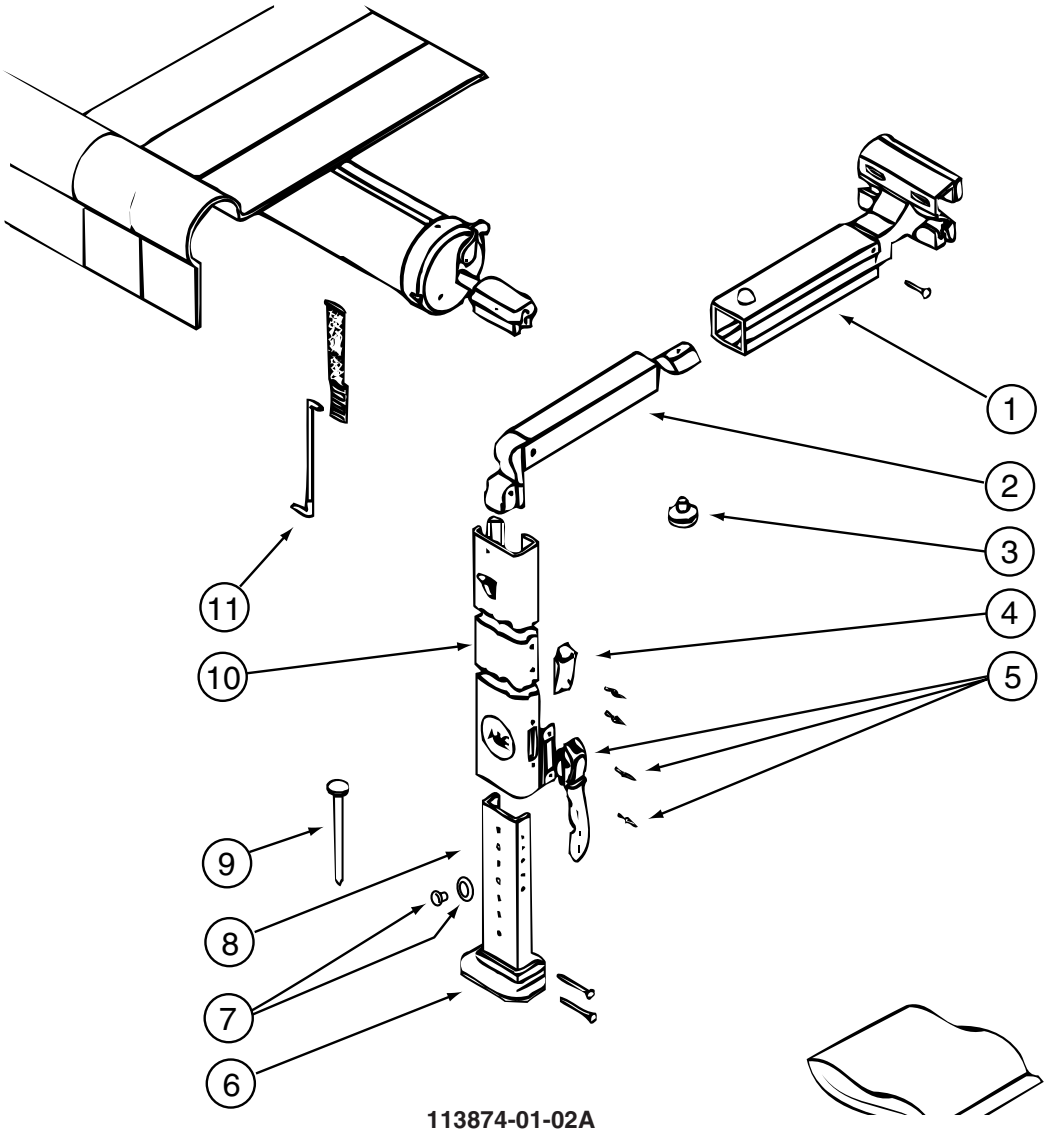

113874-01-02A

KEY	PART NUMBER	U/M	DESCRIPTION	VENDOR NO.
1	113874-01-714	EA	RAFTER - MAIN RH/LH BRT/WHT	830295.536F
2	113874-01-715	EA	RAFTER - SECONDARY BRT/WHT	830463.511F
3	113874-01-702	EA	KNOB - ADJUSTING	3105421.014
4	113874-01-706	EA	LOCK - TRAVEL	830587.001
5	113874-01-707	EA	HANDLE - LIFT W/RIVETS	830644
6	113874-01-712	EA	FOOT - PATIO	730366-001
7	113874-01-710	EA	PLUG-STOP KIT	830456
8	113874-01-717	EA	ARM - ADJUSTABLE BRT/WHT	830467.517/F
9	113874-01-709	EA	NAIL-SPIKE, 8"	113006
10	113874-01-716	EA	ARM - MAIN SUPPORT BRT/WHT	3104502.293/F
11	113874-01-703	EA	ROD-CENTER PULL W/ACCESSORY	830152.102

COPYRIGHT © 2007 WINNEBAGO INDUSTRIES INC.

EXTERIOR DOORS & COMPARTMENTS GROUP

DOOR & COMPARTMENT LAYOUT

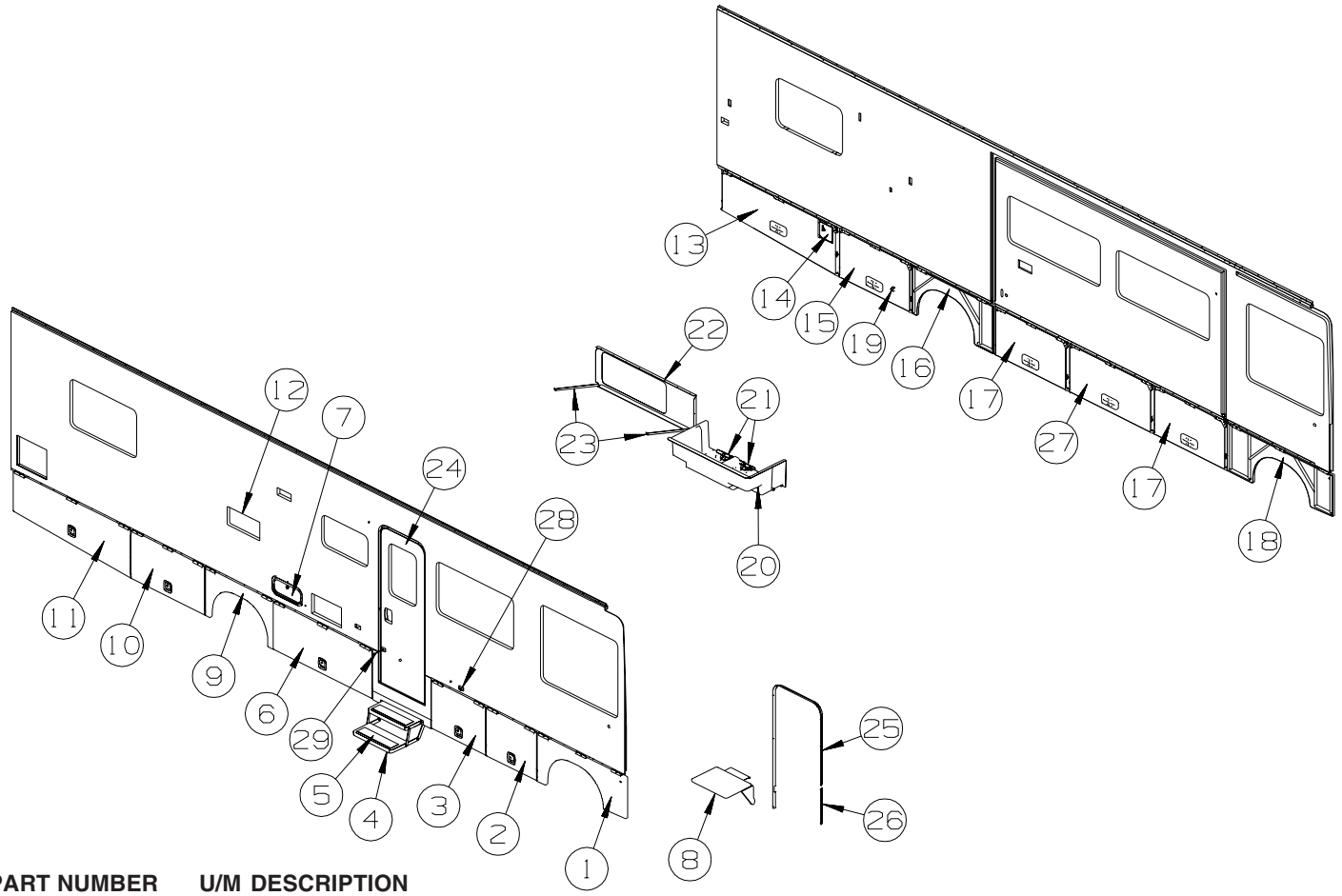

KEY	PART NUMBER	U/M	DESCRIPTION
1	147493-01-S28	EA	PANEL/WHEEL LIP - FRONT
	139793-03-01A	EA	HINGE - CENTER/VALANCE DOOR - W/O BALL STUD
2	141743-01-T53	EA	VALANCE/DOOR - W/O PADDLE LATCH/HDW - 31.2" X 24.3"
	132873-99-000	EA	ROD - LATCH - 9.4" W/3/4" DOG LEG
	132873-A0-000	EA	ROD - LATCH - 11.3" W/3/4" DOG LEG
			FROM: 00-00-00 THRU: 08-28-05
	135624-96-01B	EA	ROD - LATCH
			FROM: 08-29-05 THRU: 99-99-99
	142569-12-000	EA	SPRING/GAS - 90 LB - 15" EXTENDED/9.5" COMPRESSED
	130053-02-01A	EA	STRIKER - LUGGAGE DOOR - OFF SET - BLACK
	143793-01-01A	EA	SHIM/STRIKER - LUGGAGE - 1.5" - BLACK
	120494-04-02B	EA	SHIM - STRIKER - LUGGAGE DOOR - 3/16" - E-COATED
	132892-08-01A	FT	SEAL - BULB/SINGLE - W/U CHANNEL - BLACK
3	141743-39-T53	EA	VALANCE/DOOR - W/O PADDLE LATCH/HDW - 33.6" X 24.3"
	132873-H2-000	EA	ROD - LATCH - 10.7" W/3/4" DOG LEG
	132873-H3-000	EA	ROD - LATCH - 12.5" W/3/4" DOG LEG
			FROM: 00-00-00 THRU: 08-28-05
	135624-C0-01B	EA	ROD - LATCH
			FROM: 08-29-05 THRU: 99-99-99
	142569-12-000	EA	SPRING/GAS - 90 LB - 15" EXTENDED/9.5" COMPRESSED
	130053-02-01A	EA	STRIKER - LUGGAGE DOOR - OFF SET - BLACK
	143793-01-01A	EA	SHIM/STRIKER - LUGGAGE - 1.5" - BLACK
	120494-04-02B	EA	SHIM - STRIKER - LUGGAGE DOOR - 3/16" - E-COATED
	132892-08-01A	FT	SEAL - BULB/SINGLE - W/U CHANNEL - BLACK
4*	094707-03-01A	EA	STEP - ELECTRIC DOUBLE - W/BLACK CONTROL BOX - KWIKEE
			FROM: 00-00-00 THRU: 07-26-05
4*	094707-04-01A	EA	STEP - ELECTRIC DOUBLE - KWIKEE
			FROM: 07-27-05 THRU: 99-99-99
	116975-01-01A	EA	LATCH - W/O STRIKE - BLACK - NEW STYLE
	138787-02-02B	EA	CHANNEL/MOUNT - E-COAT
5	133114-01-01A	EA	TREAD - STEP/RUBBER - 28.5" - TAUPE

COPYRIGHT © 2007 WINNEBAGO INDUSTRIES INC.

EXTERIOR DOORS & COMPARTMENTS GROUP (CONTINUED)

DOOR & COMPARMENT LAYOUT (CONTINUED)

KEY	PART NUMBER	U/M	DESCRIPTION
6	141743-40-T53	EA	VALANCE/DOOR - W/O PADDLE LATCH/HDW - 61.1" X 24.3"
	132873-H4-000	EA	ROD - LATCH - 24.5" W/3/4" DOG LEG
	132873-H5-000	EA	ROD - LATCH - 26.3" W/3/4" DOG LEG
			FROM: 00-00-00 THRU: 08-28-05
	135624-C1-01B	EA	ROD - LATCH
			FROM: 08-29-05 THRU: 99-99-99
	142569-12-000	EA	SPRING/GAS - 90 LB - 15" EXTENDED/9.5" COMPRESSED
	130053-02-01A	EA	STRIKER - LUGGAGE DOOR - OFF SET - BLACK
	143793-01-01A	EA	SHIM/STRIKER - LUGGAGE - 1.5" - BLACK
	120494-04-02B	EA	SHIM - STRIKER - LUGGAGE DOOR - 3/16" - E-COATED
	132892-08-01A	FT	SEAL - BULB/SINGLE - W/U CHANNEL - BLACK
7	126945-09-N42	EA	DOOR/STORAGE - W/O HARDWARE - 18.3" X 9.9"
8	142034-01-01A	EA	SHELF - F/EXTERIOR TV - BRIGHT WHITE
9	147492-01-T53	EA	PANEL/WHEEL LIP - REAR
	139793-03-01A	EA	HINGE - CENTER/VALANCE DOOR - W/O BALL STUD
10	141743-03-T53	EA	VALANCE/DOOR - W/O PADDLE LATCH/HDW - 45.6" X 24.3"
	121947-01-01A	EA	BOLT - SLIDE/LATCH - W/PLASTIC PLUNGER
	132873-A3-000	EA	ROD - LATCH - 16.6" W/3/4" DOG LEG
	132873-A4-000	EA	ROD - LATCH - 18.6" W/3/4" DOG LEG
			FROM: 00-00-00 THRU: 08-28-05
	135624-97-01B	EA	ROD - LATCH
			FROM: 08-29-05 THRU: 99-99-99
	142569-12-000	EA	SPRING/GAS - 90 LB - 15" EXTENDED/9.5" COMPRESSED
	130053-02-01A	EA	STRIKER - LUGGAGE DOOR - OFF SET - BLACK
	143793-01-01A	EA	SHIM/STRIKER - LUGGAGE - 1.5" - BLACK
	120494-04-02B	EA	SHIM - STRIKER - LUGGAGE DOOR - 3/16" - E-COATED
	132892-08-01A	FT	SEAL - BULB/SINGLE - W/U CHANNEL - BLACK
11	141743-42-T53	EA	VALANCE/DOOR - PASS W/O LATCH/HDW - 24.3" X 72.6" X 20.1"
	132873-H6-000	EA	ROD - LATCH - 30.2" W/3/4" DOG LEG
	132873-H7-000	EA	ROD - LATCH - 32" W/3/4" DOG LEG
			FROM: 00-00-00 THRU: 08-28-05
	135624-C2-01B	EA	ROD - LATCH
			FROM: 08-29-05 THRU: 99-99-99
	142569-17-000	EA	SPRING/GAS - 90 LB - 12" EXTENDED/8.5" COMPRESSED
	130053-02-01A	EA	STRIKER - LUGGAGE DOOR - OFF SET - BLACK
	143793-01-01A	EA	SHIM/STRIKER - LUGGAGE - 1.5" - BLACK
	120494-04-02B	EA	SHIM - STRIKER - LUGGAGE DOOR - 3/16" - E-COATED
	132892-08-01A	FT	SEAL - BULB/SINGLE - W/U CHANNEL - BLACK
12*	084103-08-000	EA	DOOR - VENT - REFRIGERATOR - W/O JAMB - BRIGHT WHITE
12	084104-08-000	EA	JAMB - VENT DOOR/REFRIGERATOR - BRIGHT WHITE
13	141743-41-T53	EA	VALANCE/DOOR - DRVR W/O LATCH/HDW - 20.1" X 72.6" X 24.3"
	132873-H6-000	EA	ROD - LATCH - 30.2" W/3/4" DOG LEG
	132873-H7-000	EA	ROD - LATCH - 32" W/3/4" DOG LEG
			FROM: 00-00-00 THRU: 08-28-05
	135624-C2-01B	EA	ROD - LATCH
			FROM: 08-29-05 THRU: 99-99-99
	142569-17-000	EA	SPRING/GAS - 90 LB - 12" EXTENDED/8.5" COMPRESSED
	130053-02-01A	EA	STRIKER - LUGGAGE DOOR - OFF SET - BLACK
	143793-01-01A	EA	SHIM/STRIKER - LUGGAGE - 1.5" - BLACK
	120494-04-02B	EA	SHIM - STRIKER - LUGGAGE DOOR - 3/16" - E-COATED
	132892-08-01A	FT	SEAL - BULB/SINGLE - W/U CHANNEL - BLACK
14	131905-03-T53	EA	PANEL/DOOR - FUEL FILL - W/O LOCK - SANDSTONE
*	110506-A2-000	EA	LOCK - TWIST - 26.45MM
	110506-51-000	EA	CASE/CYLINDER - TWIST LATCH - W/O CAM - 1" - 596669
	110506-78-000	EA	CAM - LATCHING - 2.3"
	153306-01-01A	EA	HINGE - PIANO - 1 1/2" X 5" - UNPAINTED

COPYRIGHT © 2007 WINNEBAGO INDUSTRIES INC.

EXTERIOR DOORS & COMPARTMENTS GROUP (CONTINUED)

DOOR & COMPARMENT LAYOUT (CONTINUED)

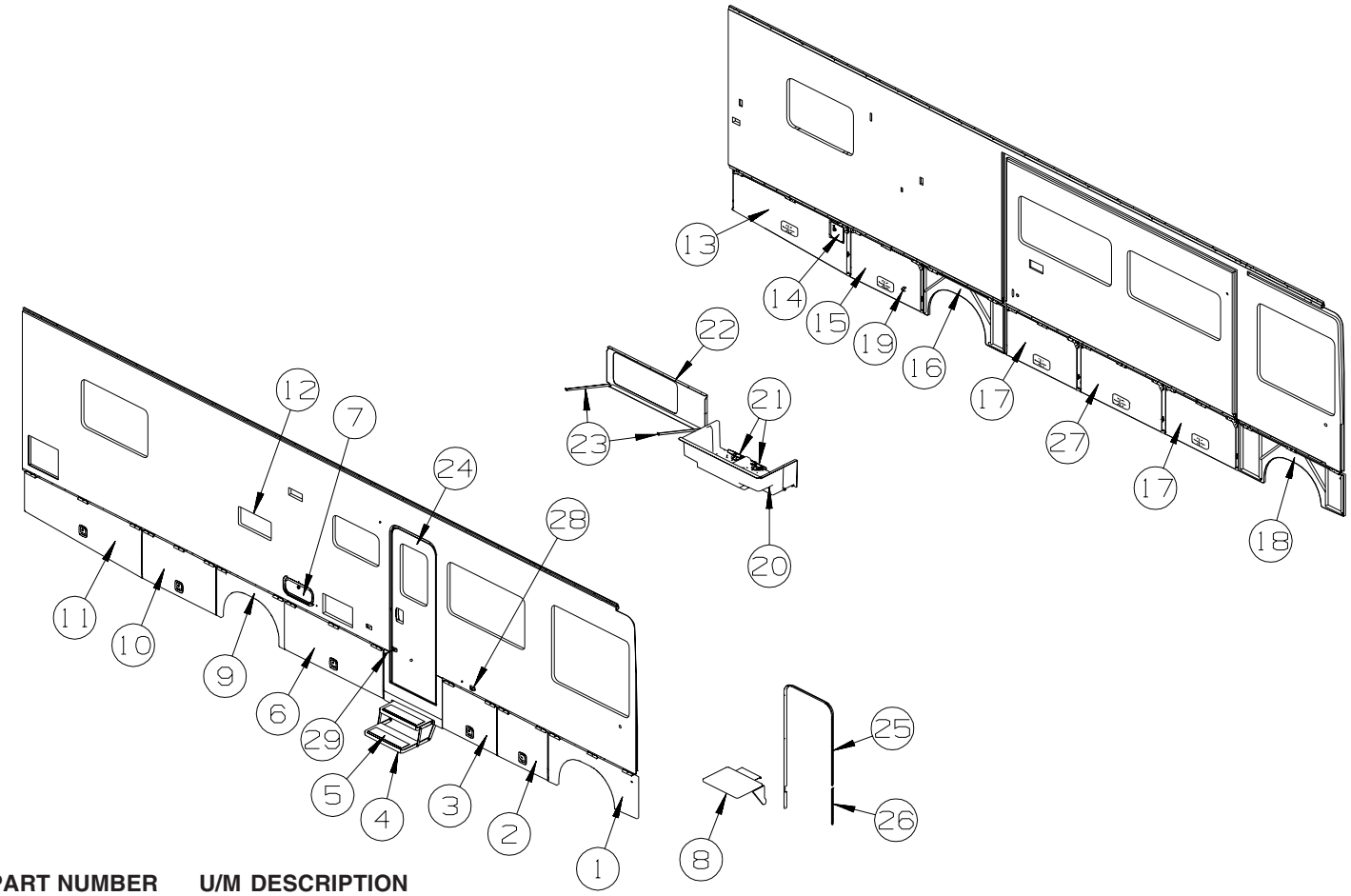

KEY	PART NUMBER	U/M	DESCRIPTION
15	141743-03-T53	EA	VALANCE/DOOR - W/O PADDLE LATCH/HDW - 45.6" X 24.3"
	132873-A3-000	EA	ROD - LATCH - 16.6" W/3/4" DOG LEG
	132873-A4-000	EA	ROD - LATCH - 18.6" W/3/4" DOG LEG
			FROM: 00-00-00 THRU: 08-28-05
	135624-97-01B	EA	ROD - LATCH
			FROM: 08-29-05 THRU: 99-99-99
	142569-12-000	EA	SPRING/GAS - 90 LB - 15" EXTENDED/9.5" COMPRESSED
	130053-02-01A	EA	STRIKER - LUGGAGE DOOR - OFF SET - BLACK
	143793-01-01A	EA	SHIM/STRIKER - LUGGAGE - 1.5" - BLACK
	120494-04-02B	EA	SHIM - STRIKER - LUGGAGE DOOR - 3/16" - E-COATED
	107721-07-000	FT	SEAL - ACCESS DOOR - .9"WIDE X 1.1"HIGH
16	147492-04-T53	EA	PANEL/WHEEL LIP - REAR
	139793-03-01A	EA	HINGE - CENTER/VALANCE DOOR - W/O BALL STUD
17	141743-03-T53	EA	VALANCE/DOOR - W/O PADDLE LATCH/HDW - 45.6" X 24.3"
	132873-A3-000	EA	ROD - LATCH - 16.6" W/3/4" DOG LEG
	132873-A4-000	EA	ROD - LATCH - 18.6" W/3/4" DOG LEG
			FROM: 00-00-00 THRU: 08-28-05
	135624-97-01B	EA	ROD - LATCH
			FROM: 08-29-05 THRU: 99-99-99
	142569-12-000	EA	SPRING/GAS - 90 LB - 15" EXTENDED/9.5" COMPRESSED
	130053-01-01A	EA	STRIKER - LUGGAGE DOOR - FLUSH - BLACK
	130053-02-01A	EA	STRIKER - LUGGAGE DOOR - OFF SET - BLACK
	143793-01-01A	EA	SHIM/STRIKER - LUGGAGE - 1.5" - BLACK
	120494-04-02B	EA	SHIM - STRIKER - LUGGAGE DOOR - 3/16" - E-COATED
	132892-08-01A	FT	SEAL - BULB/SINGLE - W/U CHANNEL - BLACK
18	147493-02-S28	EA	PANEL/WHEEL LIP - FRONT
	139793-03-01A	EA	HINGE - CENTER/VALANCE DOOR - W/O BALL STUD
19	131383-03-02A	EA	BRACKET - SHOWER HEAD - WHITE
20	144574-01-01A	EA	COMPARTMENT - DRAINAGE - PLASTIC
21*	142226-02-01A	EA	HATCH - POWER
22	137934-20-02B	EA	PLATE/SEAL - E-COATED
23	138075-01-02B	EA	ANGLE/SUPPORT - SEAL PLANE - E-COATED

COPYRIGHT © 2007 WINNEBAGO INDUSTRIES INC.

EXTERIOR DOORS & COMPARTMENTS GROUP (CONTINUED)

DOOR & COMPARMENT LAYOUT (CONTINUED)

KEY	PART NUMBER	U/M	DESCRIPTION
24	P32206-08-S28	EA	DOOR - ENTRY W/SCREEN DOOR - W/O WINDOW/LATCH (T53, TL0)
24	P32206-08-T54	EA	DOOR - ENTRY W/SCREEN DOOR - W/O WINDOW/LATCH (T54, TL1)
24	P32206-08-S29	EA	DOOR - ENTRY W/SCREEN DOOR - W/O WINDOW/LATCH (T55, TL2)
ENTRY DOOR LOCK CYLINDERS			
	138287-11-000	EA	CYLINDER/LOCK - ENTRY DOOR - MASTER W/3M ICON - (3041)
	138287-12-000	EA	CYLINDER/LOCK - ENTRY DOOR - MASTER W/3M ICON - (3042)
	138287-13-000	EA	CYLINDER/LOCK - ENTRY DOOR - MASTER W/3M ICON - (3043)
	138287-14-000	EA	CYLINDER/LOCK - ENTRY DOOR - MASTER W/3M ICON - (3044)
	138287-15-000	EA	CYLINDER/LOCK - ENTRY DOOR - MASTER W/3M ICON - (3045)
	138287-16-000	EA	CYLINDER/LOCK - ENTRY DOOR - MASTER W/3M ICON - (3046)
	138287-17-000	EA	CYLINDER/LOCK - ENTRY DOOR - MASTER W/3M ICON - (3047)
	138287-18-000	EA	CYLINDER/LOCK - ENTRY DOOR - MASTER W/3M ICON - (3048)
	138287-19-000	EA	CYLINDER/LOCK - ENTRY DOOR - MASTER W/3M ICON - (3049)
	138287-20-000	EA	CYLINDER/LOCK - ENTRY DOOR - MASTER W/3M ICON - (3050)
	138288-11-000	EA	KEY - REVERSIBLE - #3041 - T/M 16169-02-3041
	138288-12-000	EA	KEY - REVERSIBLE - #3042 - T/M 16169-02-3042
	138288-13-000	EA	KEY - REVERSIBLE - #3043 - T/M 16169-02-3043
	138288-14-000	EA	KEY - REVERSIBLE - #3044 - T/M 16169-02-3044
	138288-15-000	EA	KEY - REVERSIBLE - #3045 - T/M 16169-02-3045
	138288-16-000	EA	KEY - REVERSIBLE - #3046 - T/M 16169-02-3046
	138288-17-000	EA	KEY - REVERSIBLE - #3047 - T/M 16169-02-3047
	138288-18-000	EA	KEY - REVERSIBLE - #3048 - T/M 16169-02-3048
	138288-19-000	EA	KEY - REVERSIBLE - #3049 - T/M 16169-02-3049
	138288-20-000	EA	KEY - REVERSIBLE - #3050 - T/M 16169-02-3050
	138292-01-000	EA	SEAL - LOCK CYLINDER
VALANCE DOOR, WATER FILL & FUEL FILL DOOR LOCK CYLINDERS			
	138289-11-000	EA	CYLINDER/LOCK - ACCESS DOORS - REDUCED SENSITIVITY (3041)
	138289-12-000	EA	CYLINDER/LOCK - ACCESS DOORS - REDUCED SENSITIVITY (3042)
	138289-13-000	EA	CYLINDER/LOCK - ACCESS DOORS - REDUCED SENSITIVITY (3043)
	138289-14-000	EA	CYLINDER/LOCK - ACCESS DOORS - REDUCED SENSITIVITY (3044)
	138289-15-000	EA	CYLINDER/LOCK - ACCESS DOORS - REDUCED SENSITIVITY (3045)
	138289-16-000	EA	CYLINDER/LOCK - ACCESS DOORS - REDUCED SENSITIVITY (3046)
	138289-17-000	EA	CYLINDER/LOCK - ACCESS DOORS - REDUCED SENSITIVITY (3047)
	138289-18-000	EA	CYLINDER/LOCK - ACCESS DOORS - REDUCED SENSITIVITY (3048)
	138289-19-000	EA	CYLINDER/LOCK - ACCESS DOORS - REDUCED SENSITIVITY (3049)
	138289-20-000	EA	CYLINDER/LOCK - ACCESS DOORS - REDUCED SENSITIVITY (3050)
25	139100-01-01A	EA	GARNISH/RADIUS - ENTRY DOOR - BRIGHT WHITE
26	139101-01-01A	EA	GARNISH/STRAIGHT - W/NOTCH - 36.31" - BRIGHT WHITE
27	141743-04-T53	EA	VALANCE/DOOR - W/O PADDLE LATCH/HDW - 52.2" X 24.3"
	135624-98-01B	EA	ROD - LATCH
	132873-A5-000	EA	ROD - LATCH - 21.9" W/3/4" DOG LEG FROM: 00-00-00 THRU: 08-28-05
	132873-C7-000	EA	ROD - LATCH - 19.9" W/3/4" DOG LEG FROM: 08-29-05 THRU: 99-99-99
	142569-12-000	EA	SPRING/GAS - 90 LB - 15" EXTENDED/9.5" COMPRESSED
	130053-02-01A	EA	STRIKER - LUGGAGE DOOR - OFF SET - BLACK
	143793-01-01A	EA	SHIM/STRIKER - LUGGAGE - 1.5" - BLACK
	120494-04-02B	EA	SHIM - STRIKER - LUGGAGE DOOR - 3/16" - E-COATED
	132892-08-01A	FT	SEAL - BULB/SINGLE - W/U CHANNEL - BLACK
28	104099-02-04A	EA	CATCH/RETAINER - DOOR HOLDER - BRIGHT WHITE
29	104099-03-04A	EA	CATCH - DOOR HOLDER - STRIKE - 6" - BRIGHT WHITE
30	120863-02-000	EA	BUMPER - RUBBER/RADIUS TOP - 1" X 1 1/2"

***COMPONENT PARTS LISTED LATER IN THIS GROUP**

COPYRIGHT © 2007 WINNEBAGO INDUSTRIES INC.

EXTERIOR DOORS & COMPARTMENTS GROUP (CONTINUED)

DOOR & COMPARMENT LAYOUT (CONTINUED)

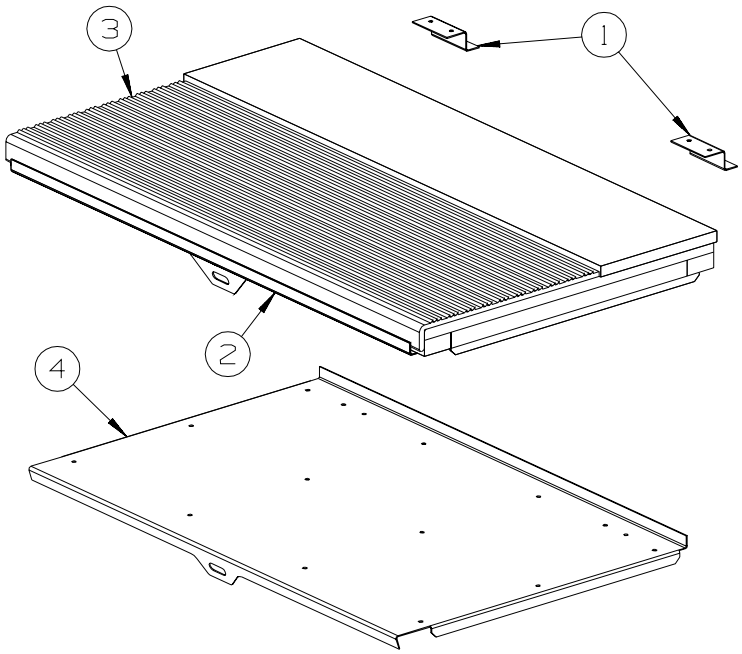

KEY	PART NUMBER	U/M	DESCRIPTION
1	101222-01-04A	EA	BRACKET - CATCH - LID - E-COATED
2	P20256-04-000	EA	LID/DOOR - ENTRY STEP - W/O CARPET/HARDWARE - D26P
2	P20256-07-000	EA	LID/DOOR - ENTRY STEP - W/O CARPET/HARDWARE - D29R, D30B, D33T, D35N
2	P20256-12-000	EA	LID/DOOR - ENTRY STEP - W/O CARPET/HARDWARE - D34A
3	133114-04-01A	EA	TREAD - STEP/RUBBER - W/LIP - 27.1" X 9.8" - TAUPE - D26P
3	133114-02-01A	EA	TREAD - STEP/RUBBER - W/LIP - 28.5" X 9.8" - TAUPE - D29R, D30B, D33T, D34A, D35N
4	123330-02-02B	EA	SUPPORT - ENTRY STEP - E-COATED - D26P
4	123330-03-02B	EA	SUPPORT - ENTRY STEP - E-COATED - D29R, D30B, D33T, D35N
4	123330-07-02B	EA	SUPPORT - ENTRY STEP - E-COATED - D34A

COPYRIGHT © 2007 WINNEBAGO INDUSTRIES INC.

EXTERIOR DOORS & COMPARTMENTS GROUP (CONTINUED)

COMPONENT PARTS FOR DOOR & COMPARTMENT LAYOUT

084103-08-000

KEY	PART NUMBER	U/M	DESCRIPTION	VENDOR NO.
	084104-01-700	EA	LOCK-MALE, FASTENER	201-721-010
	084104-01-701	EA	LOCK-FEMALE, FASTENER	201-802-010

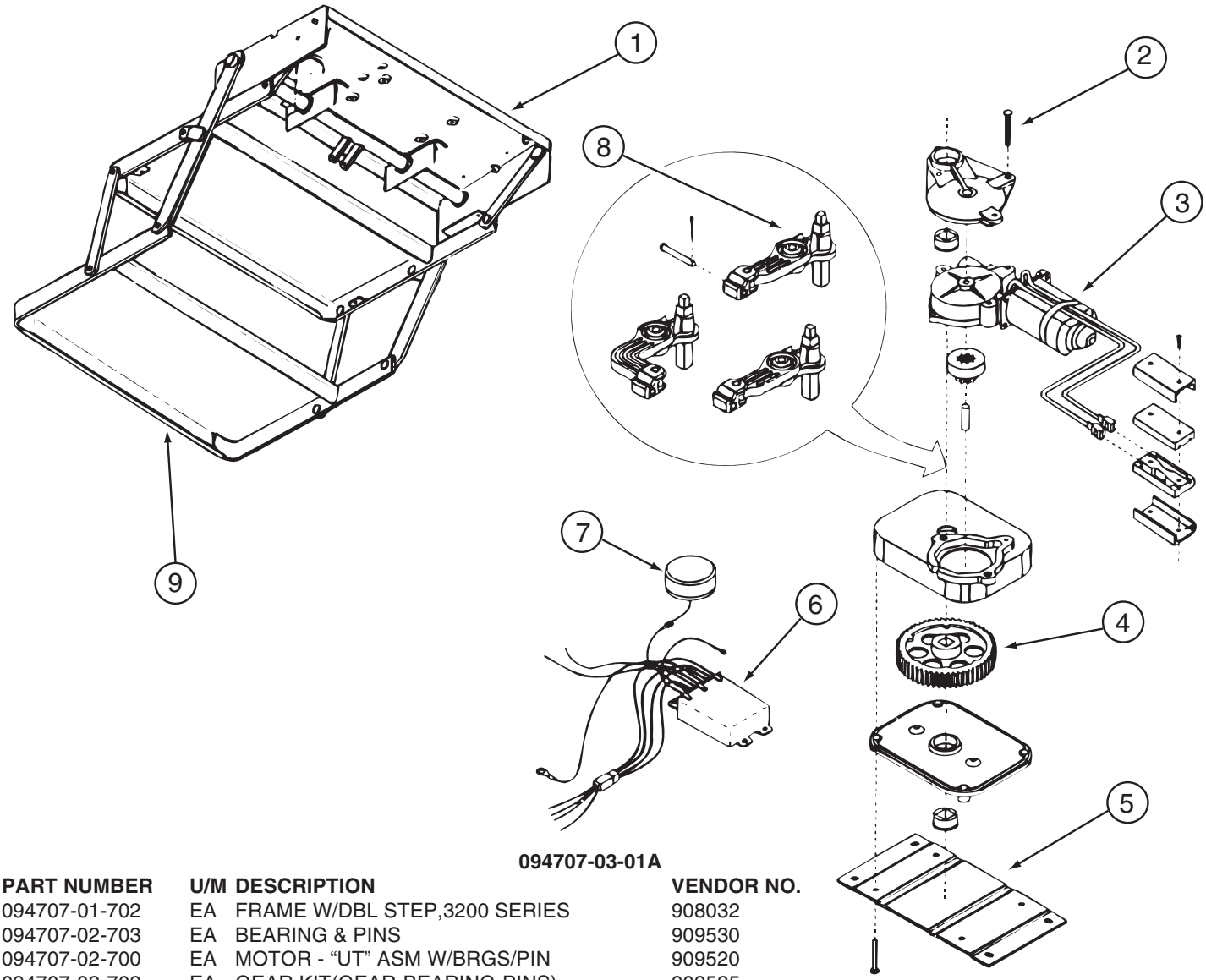

094707-03-01A

KEY	PART NUMBER	U/M	DESCRIPTION	VENDOR NO.
1	094707-01-702	EA	FRAME W/DBL STEP,3200 SERIES	908032
2	094707-02-703	EA	BEARING & PINS	909530
3	094707-02-700	EA	MOTOR - “UT” ASM W/BRGS/PIN	909520
4	094707-02-702	EA	GEAR KIT(GEAR-BEARING-PINS)	909525
5	094707-02-704	EA	CONNECTOR-MOTOR ASM.W/PLATES	909537
6	094707-03-700	EA	KIT CONTROL/SWITCH-RETROFIT	909506005
7	088746-01-705	EA	LIGHT-UNDER STEP	9004
7	088733-01-700	EA	BULB	9004
8	094707-02-701	EA	LINKAGE ASM. W/BEARINGS-PINS	909534
9	094707-02-707	EA	TREAD - NON-SKID - BLACK	909333
	094707-02-706	EA	GEAR BOX ASM. W/O MOTOR	9524
	094707-02-708	EA	TREAD - NON-SKID - YELLOW	909331
	094707-03-701	EA	PLUG - 4-WAY - PACKARD	909306

COPYRIGHT © 2007 WINNEBAGO INDUSTRIES INC.

EXTERIOR DOORS & COMPARTMENTS GROUP (CONTINUED)

COMPONENT PARTS FOR DOOR & COMPARTMENT LAYOUT (CONTINUED)

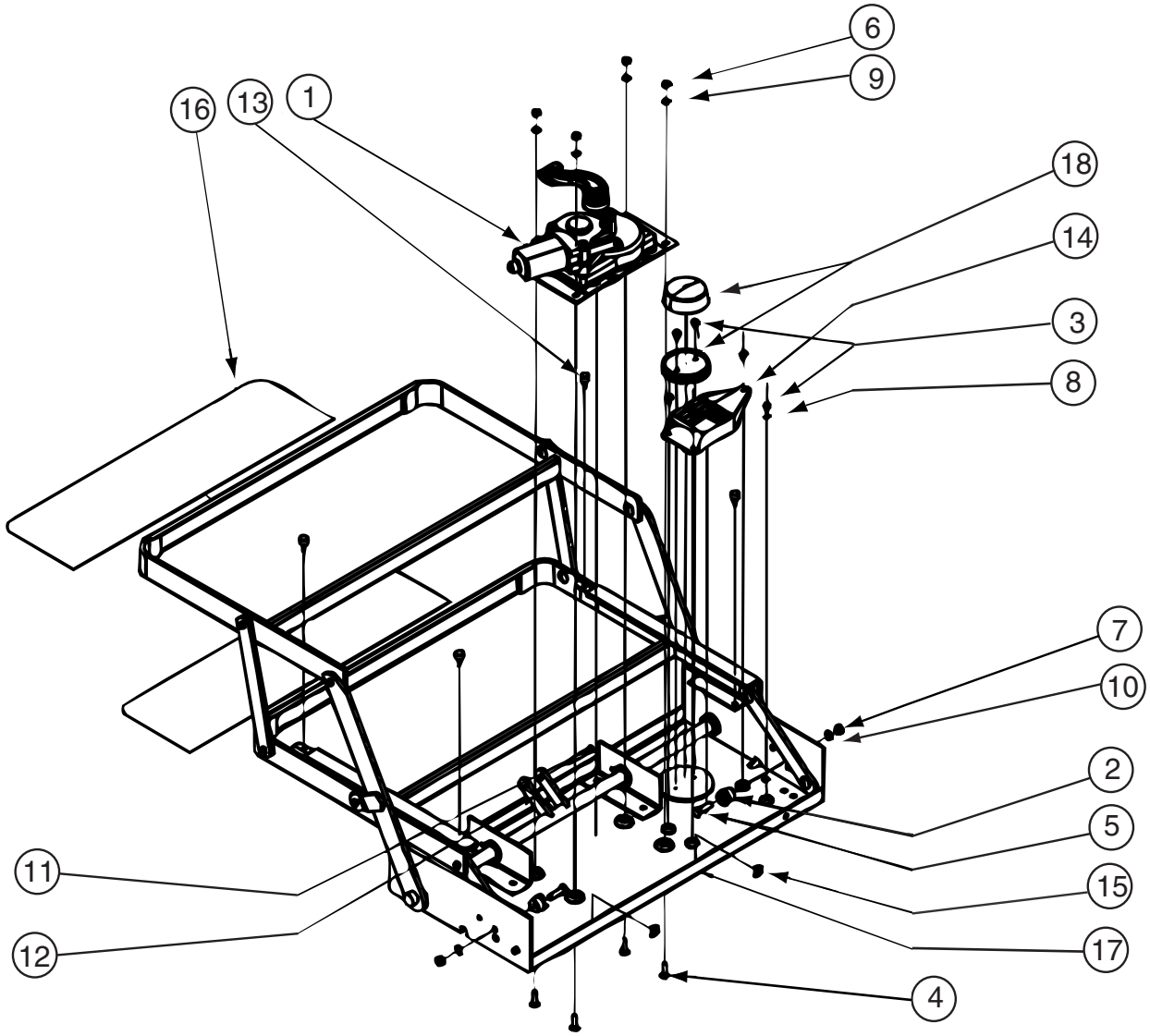

094707-04-01A

KEY	PART NUMBER	U/M	DESCRIPTION	VENDOR NO.
1	094707-04-701	EA	MOTOR “AM 214” F/IMGL STEPS	1101428
1	094707-04-703	EA	GEAR BOX W/LINKAGE-CURVED	1101425
2	143709-01-700	EA	CAM STOP	1102200
12	094707-04-702	EA	COTTOR PIN - W/CLEVIS PIN	905205000
13	143709-01-701	EA	BUMPER - BLACK (RUBBER STOP)	1602000
14	094707-04-700	EA	CONTROL UNIT W/OVERRIDE	909510000
16	143709-01-702	EA	TREAD/NON-SKID 6” X 21” BLK	1915260
17	094707-04-704	EA	FRAME W/DBL STEP-32REINF SRS	3202082
18	088746-01-705	EA	LIGHT-UNDER STEP	9004
	094707-03-701	EA	PLUG - 4-WAY - PACKARD	909306
	094707-04-711	EA	KWIKTEST - W/4-WAY PIGTAIL	909518000
			CONTACT WINNEBAGO PART SALES FOR UNLISTED COMPONENT(S)	

110506-A1-000, 110506-A2-000, 110506-26-000, 110506-27-000, 110506-36-000

KEY	PART NUMBER	U/M	DESCRIPTION	VENDOR NO.
	110506-40-700	EA	HDWE KIT	596950AAL

142226-02-01A

KEY	PART NUMBER	U/M	DESCRIPTION	VENDOR NO
	142226-02-700	EA	TAB/LOCKING - ESCAPE (RED)	9667709

COPYRIGHT © 2007 WINNEBAGO INDUSTRIES INC.

EXTERIOR DOORS & COMPARTMENTS GROUP (CONTINUED)

COMPARTMENT DOOR PIECE PARTS

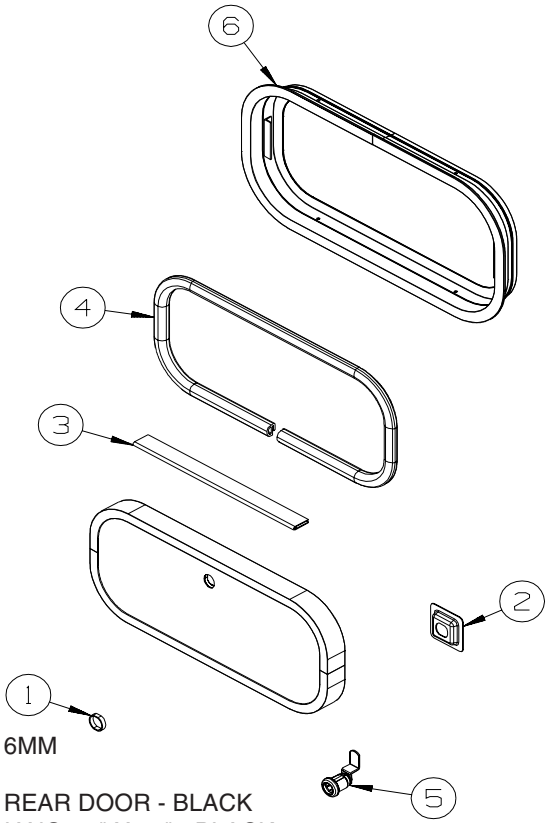

KEY	PART NUMBER	U/M	DESCRIPTION
1	139325-01-000	EA	SPACER - LOCK - 6MM
	139337-01-000	EA	GASKET - LOCK
2	097111-02-04A	EA	POCKET - LOCK - REAR DOOR - BLACK
3	081801-FN-000	EA	HINGE - DOOR - PIANO - 2" X 96" - BLACK
3	081801-V3-000	EA	HINGE - DOOR - PIANO - 2" X 96" - BRIGHT WHITE
4	106850-02-000	FT	SEAL-E - SPONGE RUBBER - .43" X .75"
			FROM: 00-00-00 THRU: 07-31-05
4	156386-01-01A	FT	SEAL - BULB - .4” X .5” - W/ADHESIVE BACK - NOT ILLUSTRATED
			FROM: 08-01-05 THRU: 99-99-99
5	138290-02-000	EA	CASE - W/CAM - W/O CYLINDER/KEY
6	056795-01-000	FT	TAPE-SEAL, 1/8" X 3/8" WIDE - PRESS ON
			FROM: 09-26-05 THRU: 99-99-99

COPYRIGHT © 2007 WINNEBAGO INDUSTRIES INC.

EXTERIOR DOORS & COMPARTMENTS GROUP (CONTINUED)

COMPARTMENT DOOR PIECE PARTS (CONTINUED)

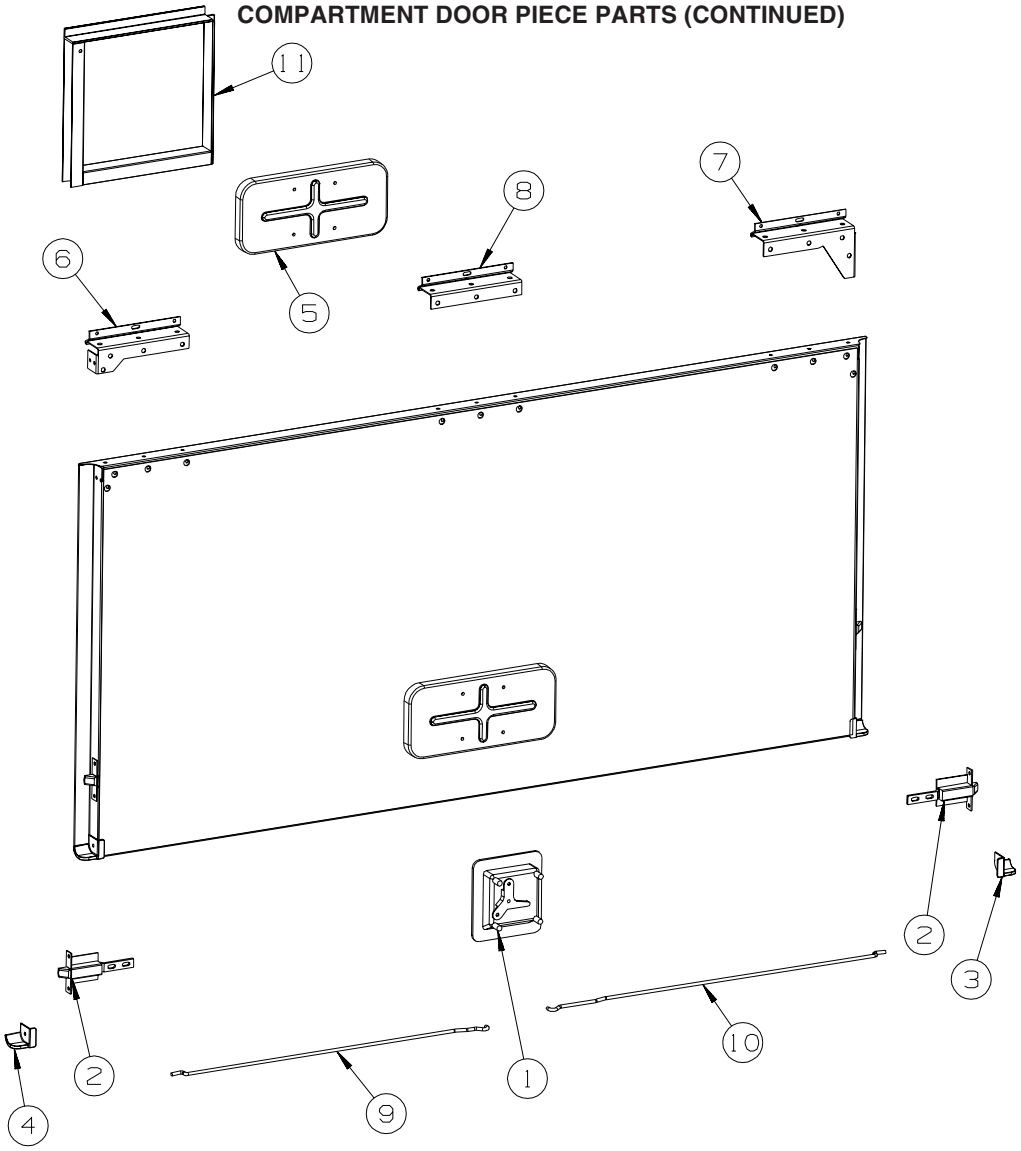

KEY	PART NUMBER	U/M	DESCRIPTION
1	112949-02-05A	EA	LATCH - PADDLE NON-LOCKING - BLACK FROM: 00-00-00 THRU: 08-28-05
1	154900-02-01A	EA	LATCH/PADDLE - NON LOCKING - COMPT DOOR - BLACK FROM: 08-29-05 THRU: 99-99-99
1	138277-01-01A	EA	LATCH/PADDLE - COMPARTMENT DOOR - BLACK - KEY ONE FROM: 00-00-00 THRU: 08-28-05
1	154900-01-01A	EA	LATCH/PADDLE - LOCKING - COMPT DOOR - KEY ONE - BLACK FROM: 08-29-05 THRU: 99-99-99
2	121947-01-01A	EA	BOLT - SLIDE W/PLASTIC PLUNGER
3	135276-01-03A	EA	REINFORCEMENT - CORNER - LEFT HAND (FACING DOOR)-PARCHMENT
3	135276-01-02A	EA	REINFORCEMENT - CORNER - LEFT HAND (FACING DOOR)-SANDSTONE
4	135276-02-03A	EA	REINFORCEMENT - CORNER -RIGHT HAND (FACING DOOR)-PARCHMENT
4	135276-02-02A	EA	REINFORCEMENT - CORNER -RIGHT HAND (FACING DOOR)-SANDSTONE
5	137359-01-01A	EA	COVER - LATCH - WHITE
6	139793-01-01A	EA	HINGE - RIGHT HAND/VALANCE DOOR - W/BALL STUD
6	139793-04-01A	EA	HINGE - RIGHT HAND/VALANCE DOOR - W/O BALL STUD - REAR PASSENGER
7	139793-05-01A	EA	HINGE - LEFT HAND/VALANCE DOOR - W/O BALL STUD
7	139793-02-01A	EA	HINGE - LEFT HAND/VALANCE DOOR - W/BALL STUD - REAR PASSENGER
8	139793-03-01A	EA	HINGE - CENTER/VALANCE DOOR - W/O BALL STUD
9	132873-01-000	EA	ROD - LATCH (BLANK) - 37.3" FROM: 00-00-00 THRU: 08-28-05
9	135624-71-01B	EA	ROD - LATCH (BLANK) - 37.3" FROM: 08-29-05 THRU: 99-99-99
10	132873-02-000	EA	ROD - LATCH (BLANK) - 37.3"
11	133049-04-T53	EA	TRIM - FUEL FILL - D26P - D29R
11	133049-07-T53	EA	TRIM - FUEL FILL - D30B - D33T - D34A - D35N

COPYRIGHT © 2007 WINNEBAGO INDUSTRIES INC.

EXTERIOR DOORS & COMPARTMENTS GROUP (CONTINUED)

ENTRY

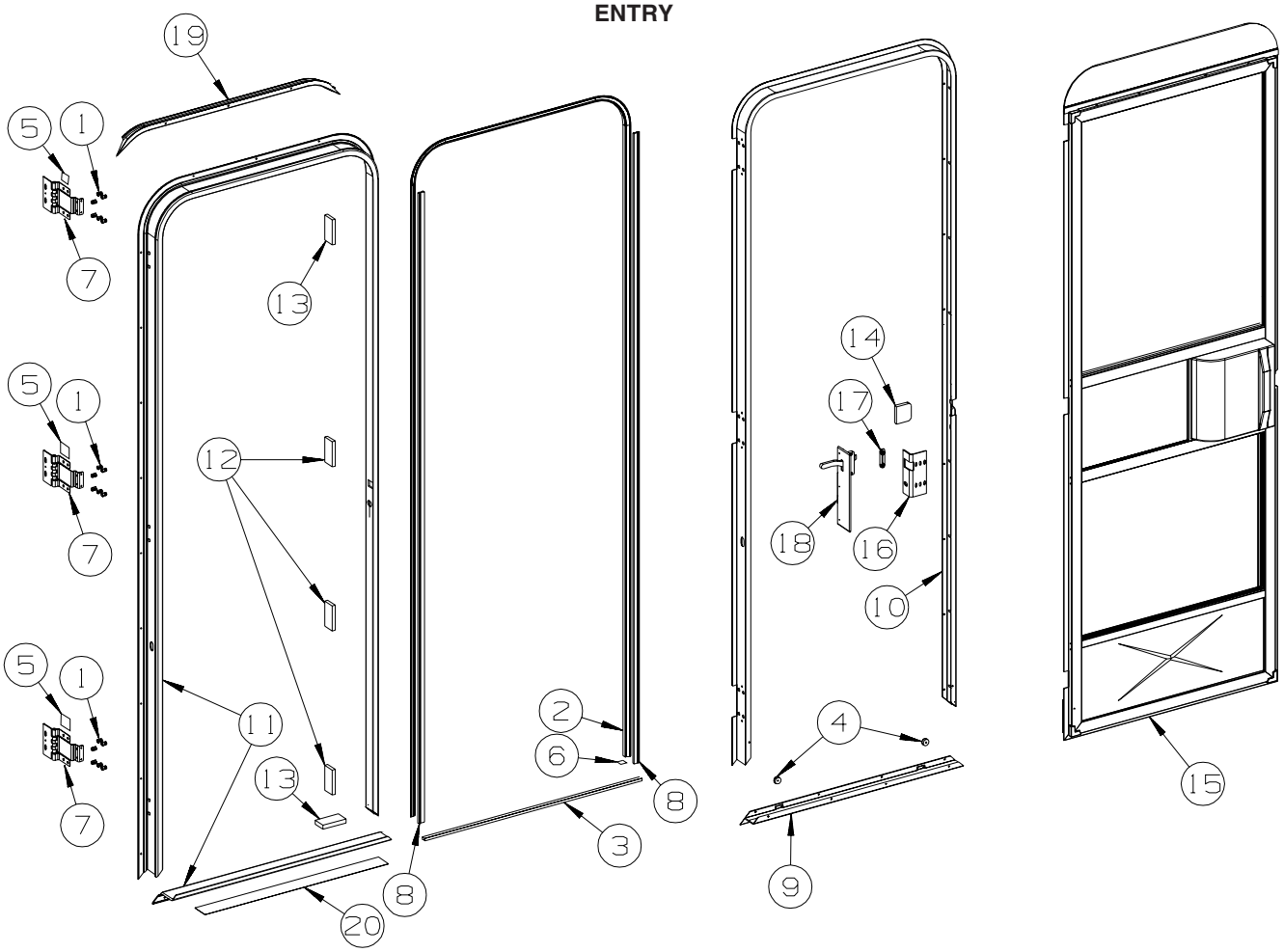

KEY	PART NUMBER	U/M	DESCRIPTION
1	039715-01-000	EA	NUT-SERT - 1/4" DIAMETER - 20 THREADS
2	075671-04-000	FT	SEAL - SPONGE - LAZY T - W/ADHESIVE STRIP - .5" WIDE
3	075673-05-000	FT	SEAL/PILE - .5" HIGH W/ADHESIVE BACK - BLACK
4	081914-02-000	EA	BUMPER - RUBBER - ROUND - 5/16" DIA. X 13/64" THICK
5	100128-02-000	FT	SEAL - FOAM/ADHESIVE BACK - .37" WIDE X .37" THICK
6	104692-01-000	FT	SEAL - ADHESIVE BACKED FOAM - 3/4" THICK X 3/4" WIDE X 25'
7	106719-01-05A	EA	HINGE - ENTRY DOOR - BRIGHT WHITE
8	118929-01-01A	FT	SEAL - PILE - PUSH ON
9	121893-03-02A	EA	FRAME - ENTRY DOOR/LOWER - BRIGHT WHITE
10	121894-27-01A	EA	FRAME - ENTRY DOOR - BRIGHT WHITE
11	121898-14-01A	EA	JAMB - DOOR/ENTRANCE - BRIGHT WHITE
12	125724-01-000	EA	SHIM - DOOR, ENTRANCE
13	125724-02-000	EA	SHIM - DOOR, ENTRANCE
14	130096-05-000	EA	FOAM - SCREEN DOOR, RETAINER
15	P32208-02-L32	EA	DOOR - SCREEN - W/O HARDWARE
16	137401-01-03B	EA	BRACKET - DOOR ANGLE - OFF WHITE
17	148364-01-12B	EA	STRIKE - SCREEN DOOR - BRIGHT WHITE
18	132915-01-01A	EA	LATCH - SCREEN DOOR - BLACK
19	139054-19-01A	EA	CAP - DRIP - JAMB MOUNTED - BRIGHT WHITE
20	038327-01-000	EA	TAPE - ANTI-SLIP - 2" X 60'

COPYRIGHT © 2007 WINNEBAGO INDUSTRIES INC.

EXTERIOR DOORS & COMPARTMENTS GROUP (CONTINUED)

ENTRY (CONTINUED)

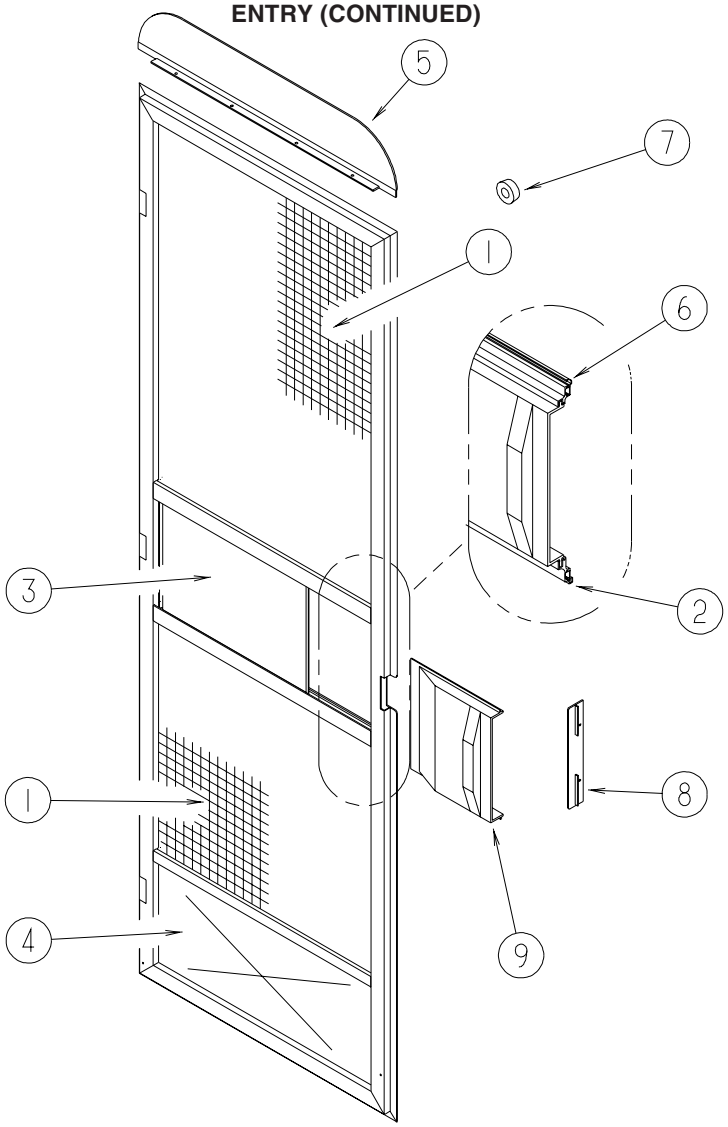

SCREEN

KEY	PART NUMBER	U/M	DESCRIPTION
1	002293-02-000	SF	SCREEN - 26" - CHARCOAL
2	002294-01-000	FT	SPLINE - SCREENING - .13" X .14"
3	016454-18-000	EA	INSERT/CENTER - SCREEN DOOR
4	078552-09-000	EA	INSERT - SCREEN DOOR - LOWER
5	078595-03-000	EA	PLATE - SCREEN DOOR
6	078777-08-000	FT	CHANNEL - SLIDER - 4 FOOT INCREMENTS
7	120863-09-000	EA	BUMPER - RUBBER/RADIUS TOP - 3/4" X 3/8" - LT GRAY
8	132081-01-01A	EA	STRIKE - SLIDER - SCREEN DOOR - BRIGHT WHITE
9	132082-01-01A	EA	SLIDER - SCREEN DOOR - BRIGHT WHITE

COPYRIGHT © 2007 WINNEBAGO INDUSTRIES INC.

EXTERIOR DOORS & COMPARTMENTS GROUP (CONTINUED)

LATCH - ENTRY

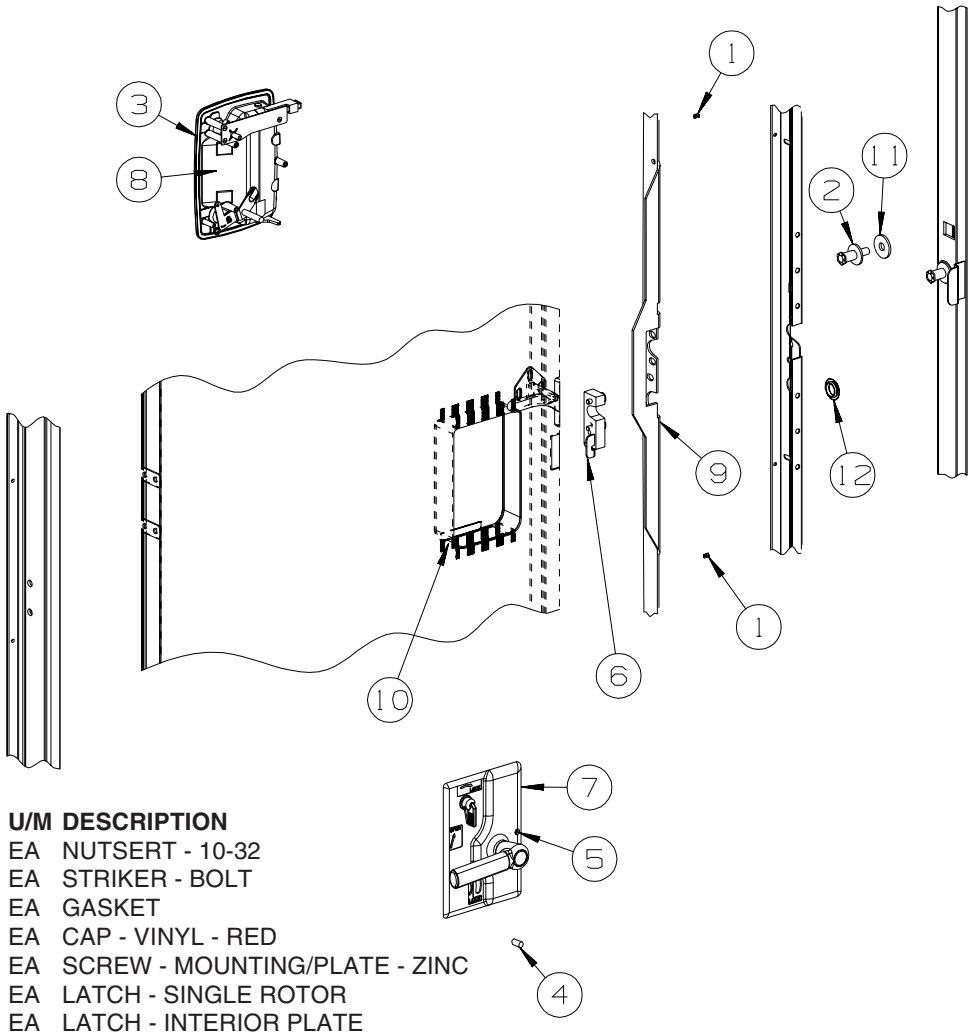

KEY	PART NUMBER	U/M	DESCRIPTION
1	072893-04-000	EA	NUTSERT - 10-32
2	092927-20-000	EA	STRIKER - BOLT
3	112782-04-01A	EA	GASKET
4	112782-05-01A	EA	CAP - VINYL - RED
5	112782-08-01A	EA	SCREW - MOUNTING/PLATE - ZINC
6	112782-22-01A	EA	LATCH - SINGLE ROTOR
7	112782-21-01A	EA	LATCH - INTERIOR PLATE
8	112782-20-01A	EA	LATCH - EXTERIOR - W/O LOCK CYLINDER W/ICON-REVERSIBLE KEY
9	132207-01-02B	EA	STIFFENER/DOOR - FORMED - E-COATED
10	137230-01-01A	EA	SPACER - NOTCHED, MILL
11	147900-01-01A	EA	SPACER - STRIKE BOLT, MILL
12	061420-14-000	EA	PLUG/PLASTIC - 7/8” DIAMETER - BLACK

COPYRIGHT © 2007 WINNEBAGO INDUSTRIES INC.

EXTERIOR SLIDEOUT GROUP

FRONT

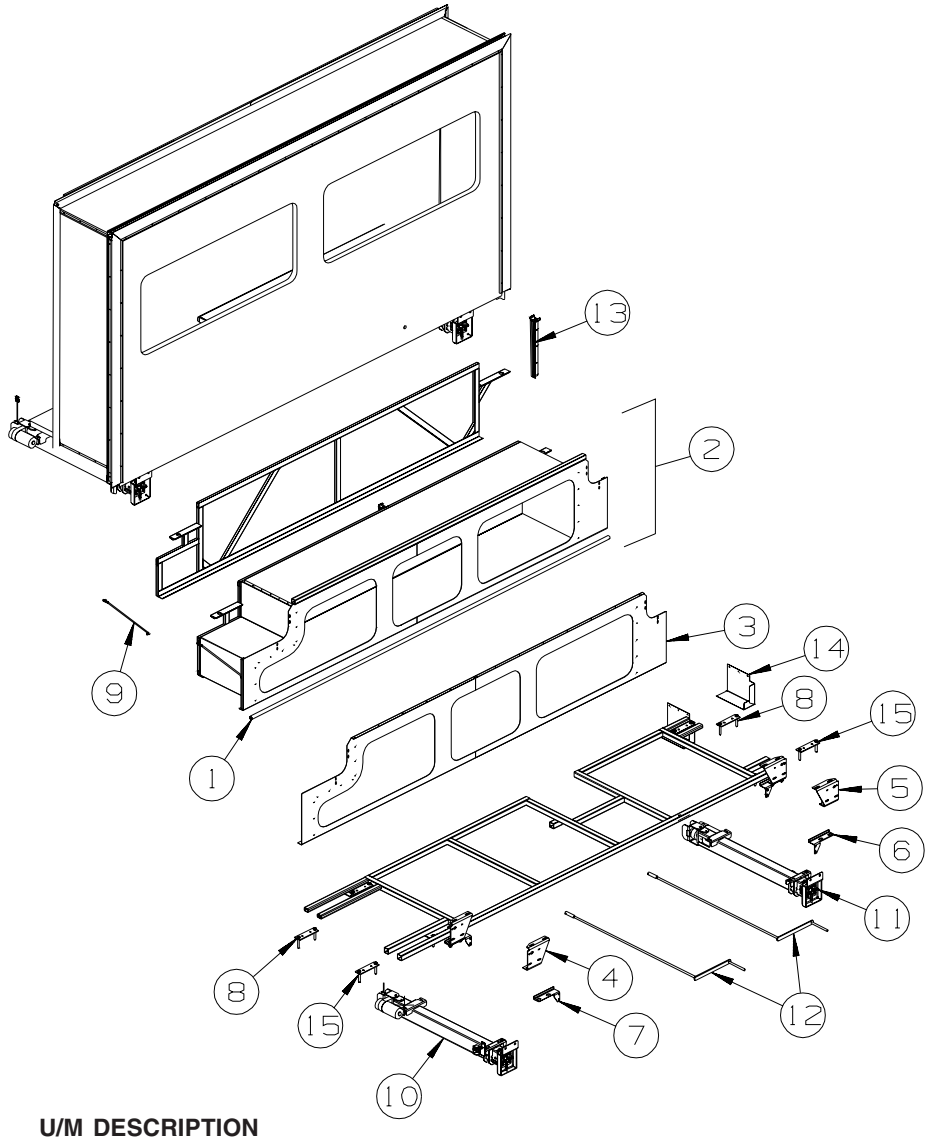

KEY	PART NUMBER	U/M	DESCRIPTION
1	126516-01-01A	FT	TRIM - VINYL/EXTRUDED - 8'
2	141162-09-S28	EA	COMPARTMENT - F/SLIDEOUT
3	137064-11-02B	EA	SEAL PLANE - F/SLIDEOUT - E-COATED
4	127030-07-02B	EA	BRACKET - INNER FRONT/MOUNT - E-COATED
5	127030-08-02B	EA	BRACKET - INNER REAR/MOUNT - E-COATED
6	125888-05-02B	EA	BRACKET/SLIDEOUT COMPARTMENT - RIGHT HAND - E-COATED
7	125888-06-02B	EA	BRACKET/SLIDEOUT COMPARTMENT - LEFT HAND - E-COATED
8	136995-03-02B	EA	PLATE W/BOLTS - 6.9" X 2" W/1/2" X 3" BOLTS
9	107865-26-000	EA	ROD - SUPPORT - VALANCE PANEL - 18.9"
10*	148875-01-000	EA	SLIDEOUT - ELECTRIC 30" - RIGHT HAND
11*	148875-02-000	EA	SLIDEOUT - ELECTRIC 30" - LEFT HAND
12	138173-06-000	EA	CRANK - SLIDEOUT
13	126591-02-02B	EA	CARRIER - WIRE LOOM - F/SLIDEOUT ROOM - E-COATED
14	138777-01-02B	EA	COVER - MOTOR - F/SLIDEOUT - E-COATED
15	136995-05-02B	EA	PLATE W/BOLTS - 5.9" X 1" W/7/16" X 3" BOLTS

***COMPONENT PARTS LISTED LATER IN THIS GROUP**

COPYRIGHT © 2007 WINNEBAGO INDUSTRIES INC.

EXTERIOR SLIDEOUT GROUP (CONTINUED)

FRONT (CONTINUED)

NOTICE

BRIGHT WHITE TRIMS WERE USED FROM: 00-00-00 THRU: 06-19-05
ALMOND TRIMS WEWRE USED FROM: 06-20-05 THRU: 99-99-99

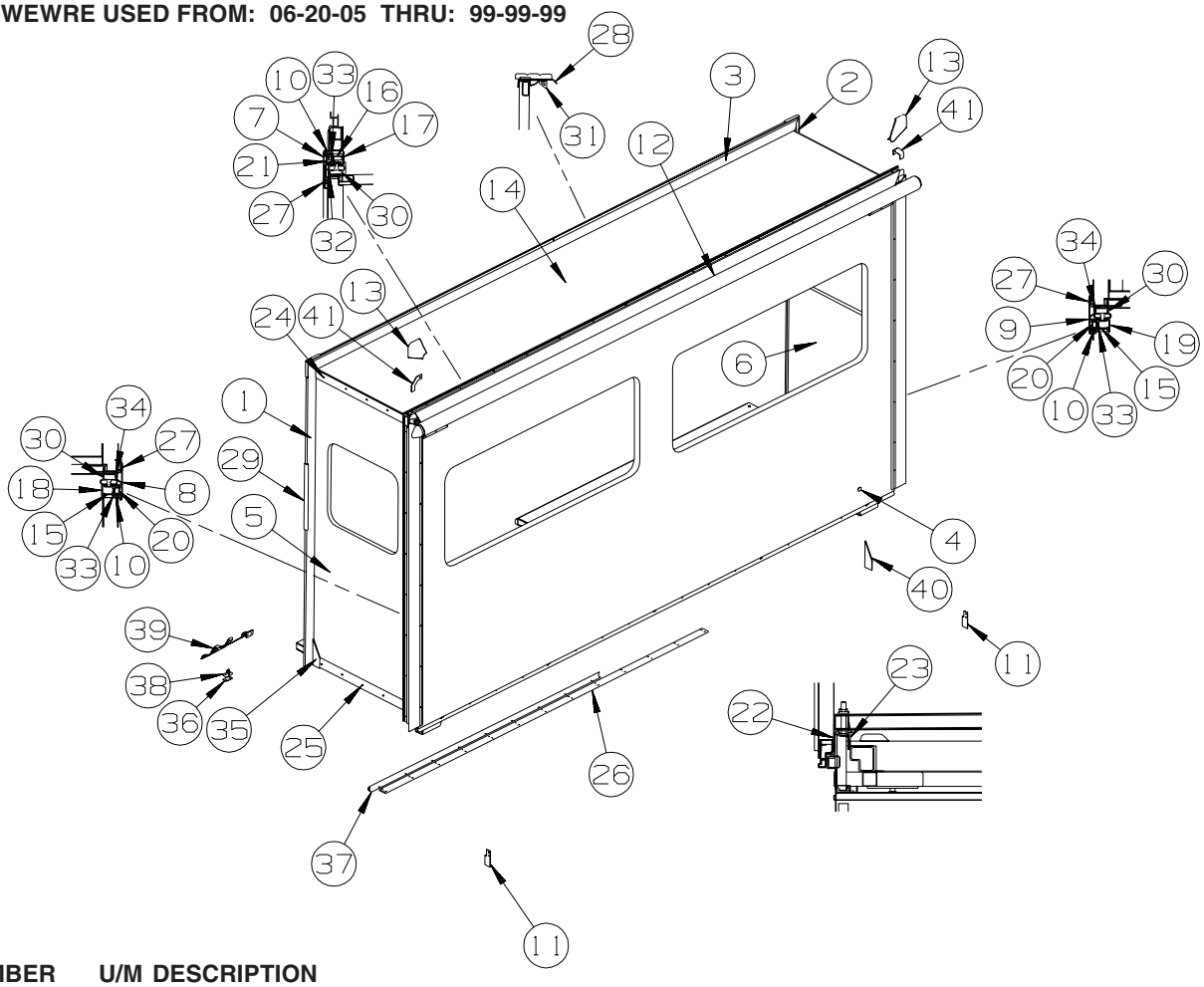

KEY	PART NUMBER	U/M	DESCRIPTION
1	139624-01-02A	EA	TRIM/SEAL - INNER/RIGHT HAND - 73.4" - ALMOND
2	139624-02-02A	EA	TRIM/SEAL - INNER/LEFT HAND - 73.4" - ALMOND
3	139624-06-02A	EA	TRIM/SEAL - INNER/TOP - 145.2” - ALMOND
4	155929-11-T53	EA	SLUG - F/SLIDEOUT (T53, TL0)
4	155929-11-T54	EA	SLUG - F/SLIDEOUT (T54, TL1)
4	155929-11-TL2	EA	SLUG - F/SLIDEOUT (T55, TL2)
5	153296-07-T53	EA	PANEL END - F/SLIDEOUT (T53, TL0)
5	153296-07-T54	EA	PANEL END - F/SLIDEOUT (T54, TL1)
5	153296-07-T55	EA	PANEL END - F/SLIDEOUT (T55, TL2)
6	153297-07-T53	EA	PANEL END - F/SLIDEOUT (T53, TL0)
6	153297-07-T54	EA	PANEL END - F/SLIDEOUT (T54, TL1)
6	153297-07-T55	EA	PANEL END - F/SLIDEOUT (T55, TL2)
7	139625-06-01A	EA	TRIM/SEAL - W/MITERED ENDS - 147.2” - BRIGHT WHITE - NOT ILLUSTRATED FROM: 00-00-00 THRU: 01-02-06
7	156417-04-01A	EA	TRIM/SEAL - W/MITERED ENDS - 143.6" - BRIGHT WHITE FROM: 01-03-06 THRU: 99-99-99
8	139625-42-01A	EA	TRIM/SEAL - W/RH MITERED END - 76.2” - BRIGHT WHITE - NOT ILLUSTRATED FROM: 00-00-00 THRU: 01-02-06
8	156417-23-01A	EA	TRIM/SEAL - W/MITERED ENDS - 74.5" - BRIGHT WHITE FROM: 01-03-06 THRU: 99-99-99
9	139625-43-01A	EA	TRIM/SEAL - W/LH MITERED END - 76.2” - BRIGHT WHITE- NOT ILLUSTRATED FROM: 00-00-00 THRU: 01-02-06
9	156417-24-01A	EA	TRIM/SEAL - W/MITERED ENDS - 74.5" - BRIGHT WHITE FROM: 01-03-06 THRU: 99-99-99
10	099418-01-000	FT	SEAL - D-SECTION/ADHESIVE BACK - .44" X .44" - BLK RUBBER - NOT ILLUSTRATED FROM: 00-00-00 THRU: 02-12-06
10	158297-01-000	FT	SEAL - D-SECTION/BULB/TEE - ADHESIVE BACK - BLACK FROM: 02-13-06 THRU: 99-99-99

COPYRIGHT © 2007 WINNEBAGO INDUSTRIES INC.

EXTERIOR SLIDEOUT GROUP (CONTINUED)

FRONT (CONTINUED)

KEY	PART NUMBER	U/M	DESCRIPTION
11	126546-01-02A	EA	COVER - END/SIDEWALL SLIDEOUT - BRIGHT WHITE - NOT ILLUSTRATED
			FROM: 00-00-00 THRU: 01-02-06
11	126546-03-02A	EA	COVER - END/SIDEWALL - BRIGHT WHITE - NOT ILLUSTRATED
			FROM: 01-03-06 THRU: 01-29-06
11	126546-03-03A	EA	COVER - END/SIDEWALL - BLACK
			FROM: 01-30-06 THRU: 99-99-99
12	122977-07-03A	EA	AWNING/SLIDEOUT W/COVER - 147" - WHITE - VINYL/VINYL WRAP
13	116444-04-12B	EA	TRIM/KEY CORNER - SLIDEOUT - 3.1" X 3.1" - BRT WHITE - NOT ILLUSTRATED
			FROM: 00-00-00 THRU: 01-02-06
13	156416-01-12B	EA	BRACKET - CORNER TRIM/SLIDEOUT - 3.1"X 3.1" - BRIGHT WHITE
			FROM: 01-03-06 THRU: 99-99-99
14	153716-04-T53	EA	ROOF - F/SLIDEOUT
15	142718-01-01A	EA	RETAINER - SIDEWALL/SLIDEOUT - 72.8"
16	142718-02-01A	EA	RETAINER - SIDEWALL/SLIDEOUT - 144.9" - MILL
17	142719-01-02A	EA	TRIM/SIDEWALL - TOP/SLIDEOUT - 146.7" - ALMOND - NOT ILLUSTRATED
			FROM: 00-00-00 THRU: 01-02-06
17	151761-01-02A	EA	TRIM - SIDEWALL/SLIDEOUT/TOP - 146.4" - ALMOND
			FROM: 01-03-06 THRU: 99-99-99
18	142720-08-02A	EA	TRIM - SIDEWALL/SLIDEOUT - 74.4" - ALMOND - NOT ILLUSTRATED
			FROM: 00-00-00 THRU: 01-02-06
18	151760-04-02A	EA	TRIM - SIDEWALL/SLIDEOUT - 74.5" - ALMOND
			FROM: 01-03-06 THRU: 99-99-99
19	142720-06-02A	EA	TRIM - SIDEWALL/SLIDEOUT - 74.4" - ALMOND - NOT ILLUSTRATED
			FROM: 00-00-00 THRU: 01-02-06
19	151760-03-02A	EA	TRIM - SIDEWALL/SLIDEOUT - 74.5" - ALMOND
			FROM: 01-03-06 THRU: 99-99-99
20	136824-45-01A	EA	TRIM - SIDEWALL/SLIDEOUT - 74.4"
21	136824-05-01A	EA	TRIM - SIDEWALL/SLIDEOUT - 146.4" - BRIGHT WHITE
22	128621-39-01A	EA	BRACKET/ZEE - SLIDEOUT - 140.4” - MILL
23	115075-03-000	FT	SEAL - WIPE - .25" X 2.9"
24	138659-01-01A	EA	TRIM/FEATURE STRIP - 181.7" - BRIGHT WHITE - NOT ILLUSTRATED
			FROM: 00-00-00 THRU: 01-02-06
24	158375-01-01A	EA	TRIM - FEATURE STRIP - 29.6" - BRIGHT WHITE
			FROM: 01-03-06 THRU: 99-99-99
25	125051-03-01A	EA	TRIM - FEATURE STRIP/LOWER - 29.3" - BRIGHT WHITE - NOT ILLUSTRATED
			FROM: 00-00-00 THRU: 01-02-06
	075673-05-000	FT	SEAL - PILE - ADHESIVE BACK - BLACK
			FROM: 00-00-00 THRU: 01-02-06
25	158030-02-01A	EA	TRIM - FEATURE STRIP/LOWER - 2.3" X 29.1" - BRIGHT WHITE
			FROM: 01-03-06 THRU: 99-99-99
26	152641-01-000	EA	SKID/GLIDE - SLIDEOUT ROOM - 1/4"X2"X117.9"- POLYETHYLENE
27	105312-01-07A	FT	INSERT - FEATURE STRIP - VINYL - BRIGHT WHITE
28	125466-02-04A	EA	SUPPORT - ROOF/INTERIOR - ALMOND
29	130262-05-000	EA	PROTECTOR - CORNER - .4" X .7"
30	136978-01-01A	FT	SEAL - SLIDEOUT - SINGLE WIPE LIP - BLACK
31	146056-01-000	FT	SEAL - TRIANGLE - W/PSA
32	133954-07-01A	EA	TRIM/SEAL - 141.8” - BRIGHT WHITE
33	142549-01-000	EA	CLIP - “S” TYPE
34	133954-05-01A	EA	TRIM/SEAL - 67.9" - BRIGHT WHITE
35	157809-01-01A	EA	SEAL - FOAM BLOCK/RIGHT SIDE - ADHESIVE BACK
36	135622-01-02B	EA	PLATE - TIEDOWN - SLIDEOUT ROOM
37	151282-05-01A	EA	TRIM - CARPET EDGE/F-ANGLE - 67.8" - BLACK
38	135619-02-01A	EA	PLATE - TIEDOWN - SLIDEOUT ROOM
39	135619-01-01A	EA	STRAP - TIEDOWN - SLIDEOUT ROOM
40	157809-02-01A	EA	SEAL - FOAM BLOCK/LEFT SIDE - ADHESIVE BACK
41	156151-01-02A	EA	PROTECTOR - CORNER - SLIDEOUT - BRIGHT WHITE
			FROM: 01-03-06 THRU: 99-99-99

COPYRIGHT © 2007 WINNEBAGO INDUSTRIES INC.

EXTERIOR SLIDEOUT GROUP (CONTINUED)

FRONT (CONTINUED)

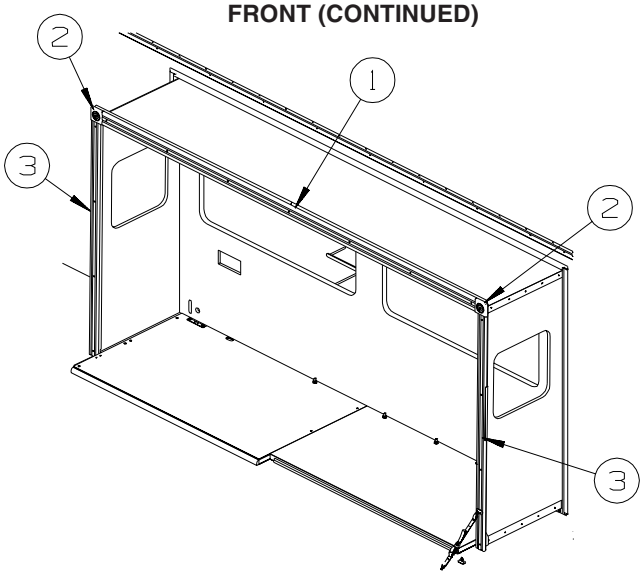

KEY	PART NUMBER	U/M	DESCRIPTION
1	132663-06-08A	EA	MOLDING-VINYL WRAP/PRE DRILLED - .6" X 3.8" X 137.4" - OAK
1	132663-06-22A	EA	MOLDING-VINYL WRAP/PRE DRILLED - .6"X3.8"X137.4"SIERRA MPL
2	132844-01-08A	EA	BLOCK - CORNER - 3.9" X 3.9" - PORTSMOUTH OAK
2	132844-01-22A	EA	BLOCK - CORNER - 3.9" X 3.9" - SIERRA MAPLE
3	132663-04-08A	EA	MOLDING-VINYL WRAP/PRE DRILLED-.6"X3"X70.2" - PORTS OAK
3	132663-04-22A	EA	MOLDING-VINYL WRAP/PRE DRILLED-.6"X3"X70.2" - SIERRA MAPLE

COMPONENT PARTS FOR FRONT

148875-01-000, 148875-02-000

KEY	PART NUMBER	U/M	DESCRIPTION	VENDOR NO.
	130294-04-700	EA	SCREW - 5/16"-18 X 1 1/2"	1202060
	131281-01-702	EA	PIN/CLEVIS-1/4" PLATED	1213190
	131281-01-704	EA	HAIRPIN/COTTER - 3/8" SPRING	1213460
	131682-01-700	EA	ROLLER - (BEARING)	1912040
	138173-01-701	EA	POP RIVET - SS 3/16"X1/4"	1214630
	138173-01-707	EA	WEAR PUCK - PLASTIC F/DRIVE	1612523
	140457-01-701	EA	BUSHING - 1" X 3/4" X 1/2"ID	1614006
	140457-01-704	EA	SHAFT/AXLE - REAR ROLLER	7204523
	148875-01-700	EA	PIN/COTTER - 3/32" X 1/2"	1213520
	148875-01-701	EA	PIN/ROLL - 3/16" X 3/4"	1213693
	148875-01-702	EA	PIN/ROLL - 1/4" X 1"	1213701
	148875-01-703	EA	NUT - PLASTIC - 1"	1612548
	148875-01-704	EA	END CARRIER - PLASTIC - 1"	1612549
	148875-01-705	EA	MOTOR/LINEAR - SLIDE ROOM	1820111
	148875-01-706	EA	DRIVE SCREW - SLIDE ROOM	1820401
	148875-01-707	EA	END GUIDE F/SCREW - 1"	1820450

COPYRIGHT © 2007 WINNEBAGO INDUSTRIES INC.

GENERATOR GROUP

GAS

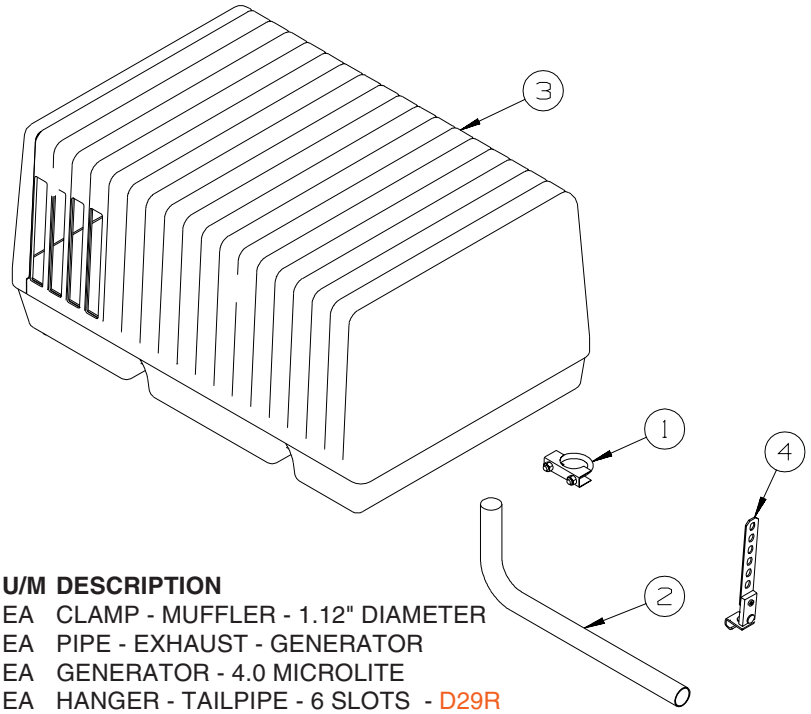

MICROLITE
D26P, D29R, D30B

KEY	PART NUMBER	U/M	DESCRIPTION
1	007125-04-000	EA	CLAMP - MUFFLER - 1.12" DIAMETER
2	105958-23-000	EA	PIPE - EXHAUST - GENERATOR
3	109982-03-000	EA	GENERATOR - 4.0 MICROLITE
4	007131-01-000	EA	HANGER - TAILPIPE - 6 SLOTS - D29R

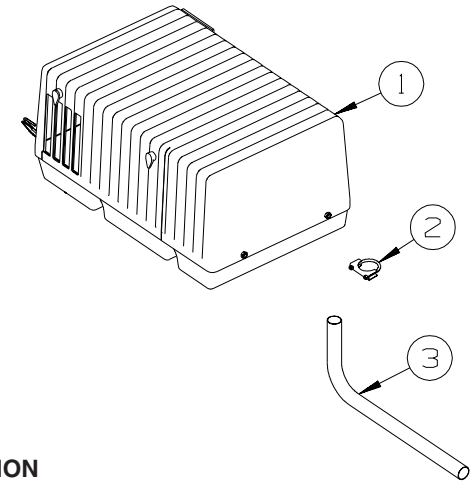

MARQUIS GOLD
D33T, D34A, D35N

KEY	PART NUMBER	U/M	DESCRIPTION
1	135707-07-000	EA	GENERATOR - 5.5 - 30/20 - GAS - MARQUIS GOLD
2	007125-03-000	EA	CLAMP - MUFFLER - 1.5" DIAMETER
3	105958-07-000	EA	PIPE - EXHAUST - 1.4" INLET X 1.5"O.D. - 4.9" X 20.1"

COPYRIGHT © 2007 WINNEBAGO INDUSTRIES INC.

HEATING & A/C GROUP

AUTOMOTIVE

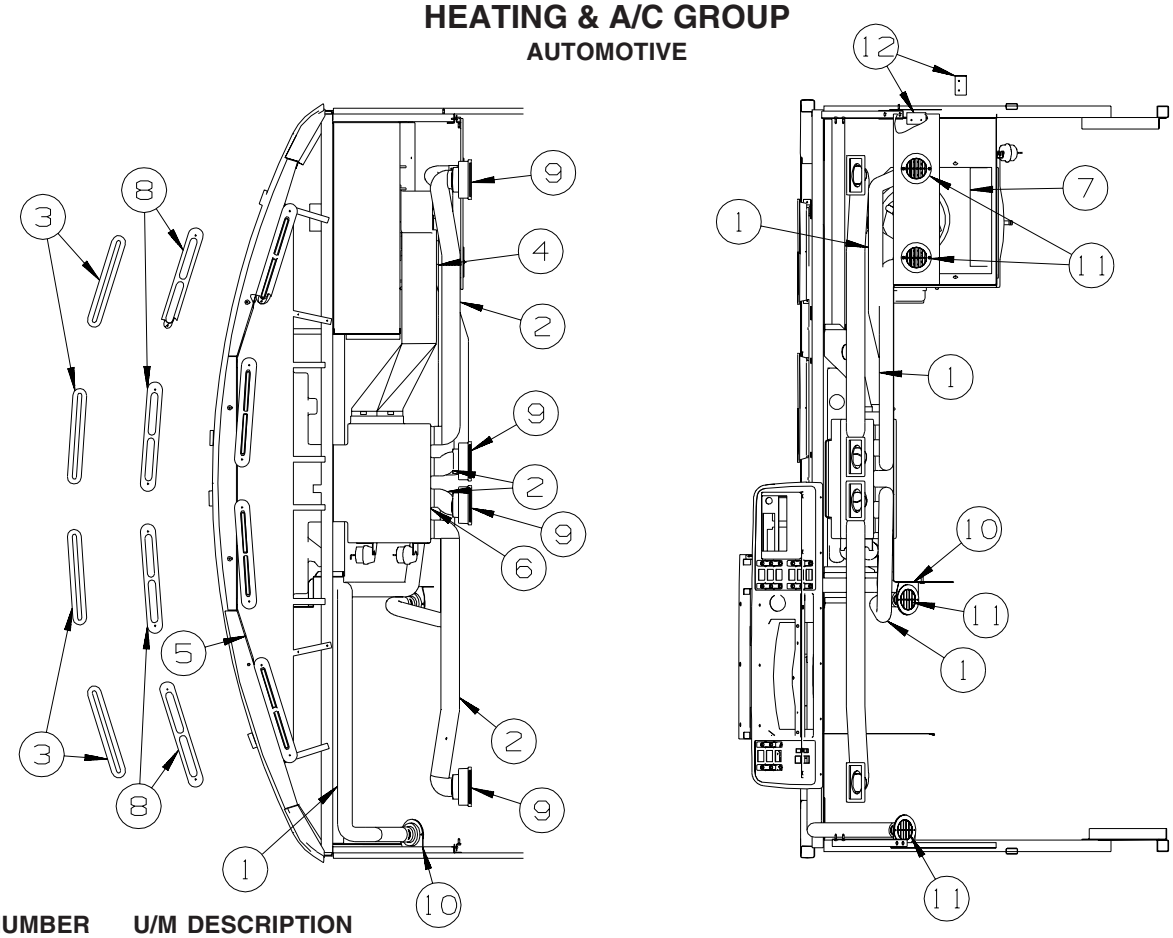

KEY	PART NUMBER	U/M	DESCRIPTION
1	007076-01-000	EA	HOSE - FLEXIBLE PVC - 2" ID - INCREMENTS OF 50'
2	007281-01-000	EA	HOSE - FLEXIBLE PVC - 2 1/2" ID X 50'
3	077075-01-000	EA	GASKET - INSTRUMENT PANEL/DEFROSTER PLENUM - .6" X 10.2"
4	103016-03-000	EA	PLENUM - TRANSITION
5	103017-03-000	EA	PLENUM - DEFROSTER
6*	103930-39-000	EA	CONTROL/PLENUM - ROTARY
7*	103930-55-000	EA	EVAPORATOR/HEATER - NONCHARGED - SINGLE OUTPUT
8	135265-01-04A	EA	VENT - DEFROSTER - PLASTIC - GLACIER
9	135803-01-01A	EA	LOUVER - A/C - 2.5" X 5.2" - BLACK
10	136157-03-02B	EA	BRACKET - HEATER - E-COATED
11	024990-05-000	EA	OUTLET - DEFROSTER - W/SWIVEL - 2" SLEEVE/4" OD - BLACK
12	156732-01-01A	EA	BRACE
	113452-02-000	FT	SEAL/TRIM - FRONT - VINYL W/WIRE CARRIER - .027" - WHERE HOSES CROSS METAL

***COMPONENT PARTS LISTED LATER IN THIS GROUP**

COPYRIGHT © 2007 WINNEBAGO INDUSTRIES INC.

HEATING & A/C GROUP (CONTINUED)

AUTOMOTIVE (CONTINUED)

WORKHORSE

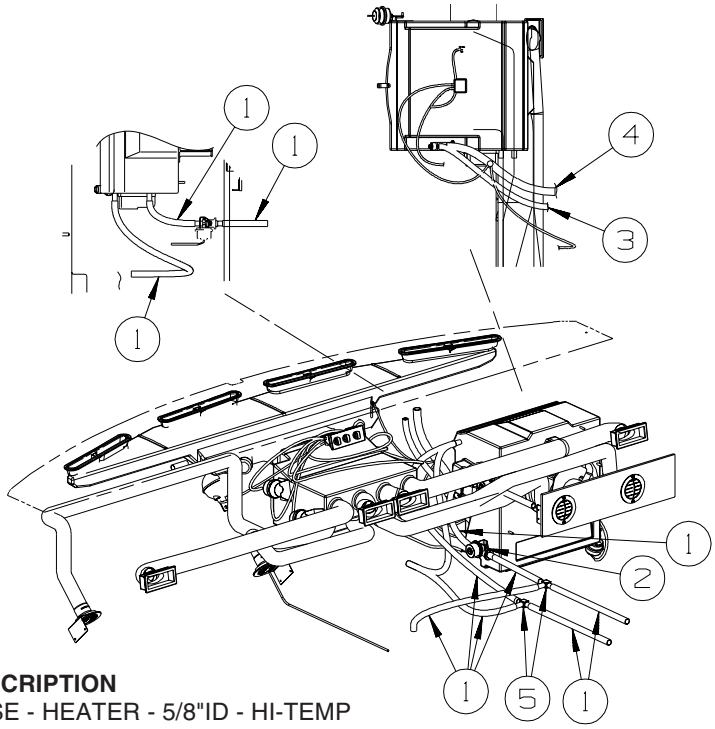

KEY	PART NUMBER	U/M	DESCRIPTION
1	007108-01-000	FT	HOSE - HEATER - 5/8"ID - HI-TEMP
2	103930-23-000	EA	VALVE/WATER - 2 PORT/VACUUM CONTROLLED - “NEW DESIGN”
3*	103930-46-000	EA	HOSE - EXPANSION BLOCK (EVAPORATOR) TO COMPRESSOR
4*	103930-47-000	EA	HOSE - EXPANSION VALVE (EVAPORATOR) TO DRIER
5	076776-01-000	EA	TEE - BEADED - 5/8" X 5/8" X 5/8"

***COMPONENT PARTS LISTED LATER IN THIS GROUP**

FORD

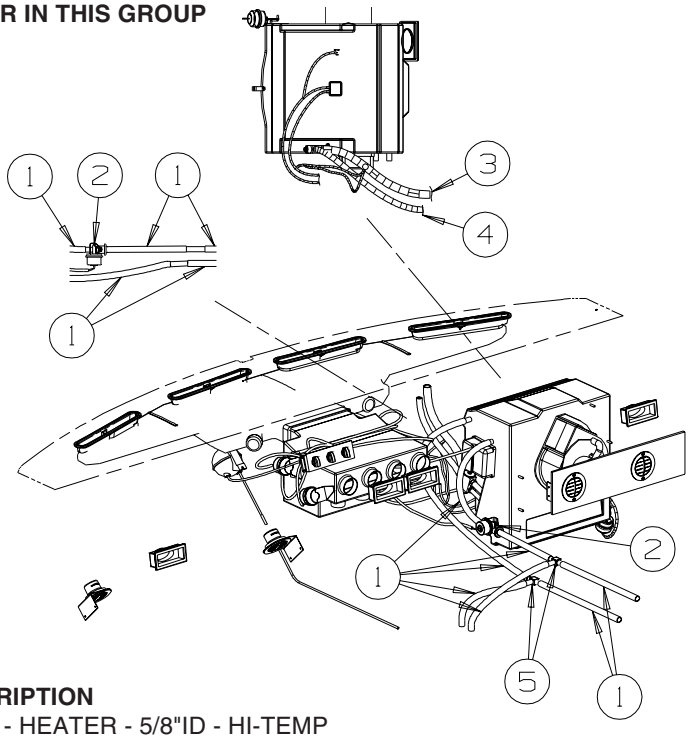

KEY	PART NUMBER	U/M	DESCRIPTION
1	007108-01-000	FT	HOSE - HEATER - 5/8"ID - HI-TEMP
2	103930-23-000	EA	VALVE/WATER - 2 PORT/VACUUM CONTROLLED - “NEW DESIGN”
3*	103930-44-000	EA	HOSE - EVAPORATOR/DRYER - #6
4*	103930-45-000	EA	HOSE - EVAPORATOR/COMPRESSOR - FORD
5	076776-01-000	EA	TEE - BEADED - 5/8" X 5/8" X 5/8"

***COMPONENT PARTS LISTED LATER IN THIS GROUP**

COPYRIGHT © 2007 WINNEBAGO INDUSTRIES INC.

HEATING & A/C GROUP (CONTINUED)

COMPONENT PARTS FOR AUTOMOTIVE

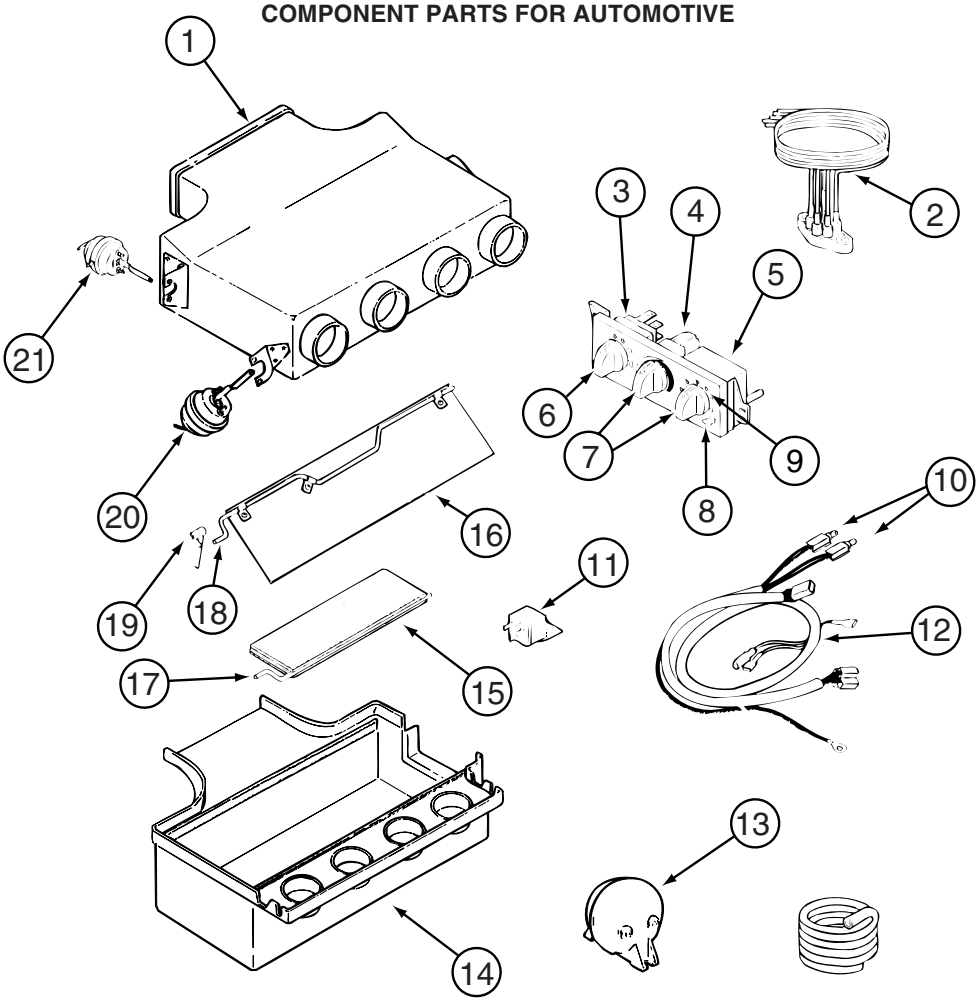

103930-39-000

KEY	PART NUMBER	U/M	DESCRIPTION	VENDOR NO.
1	103930-39-705	EA	PLENUM - TOP	060-0482
2	103930-33-703	EA	VACUUM HARNESS	036-0466
3	103930-33-707	EA	SWITCH - BLOWER	032-00066
4	103930-33-708	EA	SWITCH - POTENTIOMETER	032-0184
5	103930-33-709	EA	SWITCH - VACUUM	032-0183
6	103930-33-712	EA	KNOB - BLOWER	062-00539
7	103930-33-713	EA	KNOB - TEMPERATURE	062-0540
8	103930-33-702	EA	CONTROL PANEL	083-0169
9	103930-33-710	EA	DECAL F/CONTROL HEAD	058-0102
10	103930-33-705	EA	LIGHT BULBS	035-0030
11	103930-02-707	EA	RELAY-BOSCH W/RESISTER	031-0001
12	103930-33-711	EA	WIRE HARNESS-W/BULBS(CAVITY)	036-0496
13	103930-02-710	EA	CANISTER-VACUUM	054-0002
14	103930-39-707	EA	PLENUM - BOTTOM	060-0483
15	103930-39-706	EA	PLATE - DOOR - A/C	071-0623
16	103930-04-700	EA	DOOR - DEFROSTER-A/C	071-0149
17	103930-39-700	EA	ROD - DOOR - AC/HEAT	073-067
18	103930-39-701	EA	ROD - DOOR - AC/DEFROST	073-0069
19	103930-39-704	EA	SPRING	022-0119
20	103930-02-708	EA	MOTOR-VACUUM SERVO, A/C	030-0025
21	103930-33-701	EA	MOTOR - VACUUM, 3 STAGE	030-0105

103930-44-000

KEY	PART NUMBER	U/M	DESCRIPTION	VENDOR NO
	103930-29-701	EA	O'RING F/LOW PRESSURE SWITCH	045-0483
	103930-44-700	EA	HOSE ASSEMBLY #6	085-0462
	113245-01-711	EA	O'RING #6	045-0129

COPYRIGHT © 2007 WINNEBAGO INDUSTRIES INC.

HEATING & A/C GROUP (CONTINUED)

COMPONENT PARTS FOR AUTOMOTIVE (CONTINUED)

103930-45-000

KEY	PART NUMBER	U/M	DESCRIPTION	VENDOR NO.
	103930-17-702	EA	O'RING #10	045-0127
	103930-45-700	EA	HOSE - #10 EVAP/COMP - 3'	085-0463

103930-46-000

KEY	PART NUMBER	U/M	DESCRIPTION	VENDOR NO
	103930-17-702	EA	O'RING #10	045-0127
	103930-29-701	EA	O'RING F/LOW PRESSURE SWITCH	045-0483
	103930-46-700	EA	HOSE - #10 EVAP/COMP - 4.3'	085-0486

103930-47-000

KEY	PART NUMBER	U/M	DESCRIPTION	VENDOR NO
	103930-47-700	EA	HOSE - #6-EVAP/DRIER - 2.2'	085-0485
	113245-01-710	EA	O'RING, #12	045-0128

COPYRIGHT © 2007 WINNEBAGO INDUSTRIES INC.

HEATING & A/C GROUP (CONTINUED)

COMPONENT PARTS FOR AUTOMOTIVE (CONTINUED)

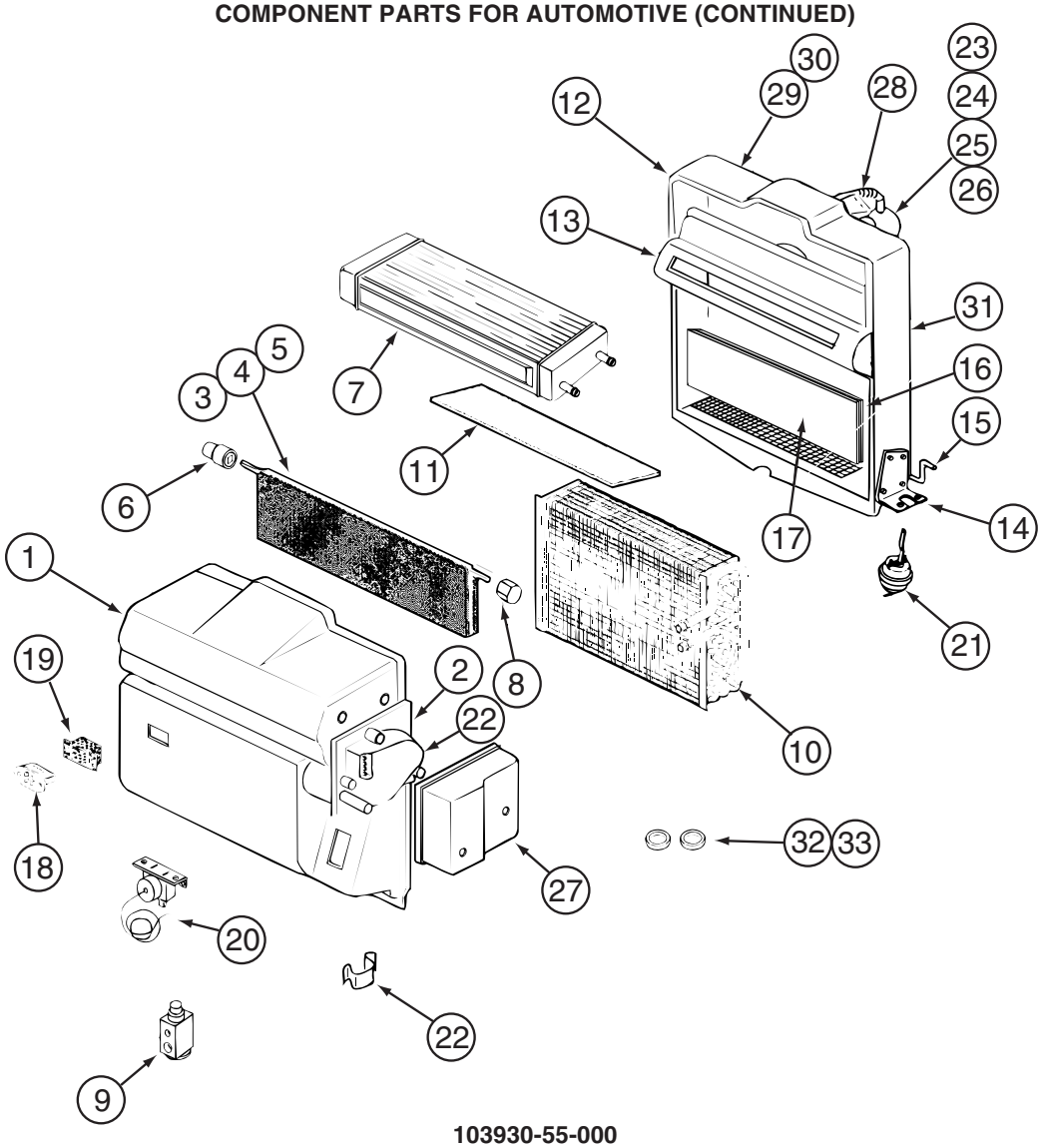

103930-55-000

KEY	PART NUMBER	U/M	DESCRIPTION	VENDOR NO.
1	103930-55-701	EA	CASE - FRONT	062-0658
2	103930-30-701	EA	PLATE - MOTOR MOUNT	062-0544
3	103930-55-705	EA	DOOR - BLEND AIR	071-0892
6	103930-30-702	EA	BUSHING/DRIVE (BLEND DOOR)	062-0168
7	103930-55-706	EA	CORE - HEATER - W/GASKET	084-0271
8	103930-30-709	EA	COUPLING - BLEND DOOR SHAFT	062-0634
9	103930-20-700	EA	VALVE-EXPANSION-BLOCK, 2 TON	034-0032
10	103930-55-700	EA	CORE-EVAPORATOR	041-00168
12	103930-55-702	EA	CASE-REAR	062-0657
14	103930-01-708	EA	BRACKET-VACUUM MOTOR	070-0113
15	103930-20-704	EA	ROD-DOOR-RECIRCULATING	073-0018
16	103930-55-707	EA	DOOR - RECIRCULATION	071-0891
18	103930-01-710	EA	RESISTOR-FUSED, A/C 4 TERM	035-0006
20	103930-01-711	EA	THERMOSTAT	033-0003
21	103930-02-708	EA	MOTOR-VACUUM SERVO, A/C	030-0025
22	103930-30-703	EA	MOTOR - SERVO	030-0104
23	103930-20-707	EA	HOUSING-BLOWER	062-0145
24	103930-55-703	EA	MOTOR-BLOWER W/O PIGTAIL	030-0137
25	103930-01-717	EA	WHEEL-BLOWER, CLOCKWISE	062-0010
26	103930-20-708	EA	CLIP-MOTOR SHAFT	022-0001
27	103930-30-704	EA	COVER - SERVO	062-0545
32	113245-01-707	EA	O'RING #8	045-0126
33	103930-17-702	EA	O'RING #10	045-0127
	103930-55-704	EA	CORE-HEATER	042-0059
	110279-01-703	EA	HOSE-VENT F/BLOWER MOTOR	051-0034
			CONTACT WINNEBAGO PART SALES FOR UNLISTED COMPONENT(S)	

COPYRIGHT © 2007 WINNEBAGO INDUSTRIES INC.

HEATING & A/C GROUP (CONTINUED)

FURNACE

KEY	PART NUMBER	U/M	DESCRIPTION
*	139980-02-000	EA	FURNACE - 30000 BTU - SF QUIET - SUBURBAN SF-30 2321J - FURNACE-30,000BTU
*	143563-02-000	EA	FURNACE - 40000 BTU HIGH QUIET - SUBURBAN SH-42 2346A - FURNACE-40,000 BTU
	098668-23-000	EA	DOOR - ACCESS - FURNACE - BRIGHT WHITE
	130837-02-01A	EA	REGISTER - HEAT - W/DAMPER - DURA BEIGE
	137965-01-02A	EA	REGISTER - 11.2" X 3.6"(9.7 X 2.1"R/O) W/O DAMPER-ANT PWTR
	137965-02-02A	EA	REGISTER - 11.2" X 3.6"(9.7 X 2.1"R/O) W/DAMPER - ANT PWTR
	056464-10-000	EA	REGISTER W/O DAMPER - 4" DIAMETER - PLASTIC - BEIGE
	093614-01-02A	EA	GRILLE - AIR RETURN - 15.9" X 7.9" - BEIGE
	093614-02-02A	EA	GRILLE - AIR RETURN - 9.9" X 9.9" - BEIGE
	093614-11-01A	EA	GRILLE - AIR RETURN - 13.9" X 7.9" - BEIGE
	009198-01-000	FT	DUCT - HEAT - FLEXIBLE - 4" ID X 25'
	009198-02-000	FT	DUCT - HEAT - FLEXIBLE - 2" ID X 25'
	143563-06-000	EA	DUCT KIT - BOTTOM
	092776-01-000	EA	ADAPTER - DUCT - 2"
	069636-02-000	EA	CONNECTOR - DUCT - 4" ID
	098668-26-000	EA	BOTTOM DUCT KIT - 40,000 BTU
	143563-05-000	EA	GASKET - FIBERGLASS - SUBURBAN #071018
	009200-01-000	EA	TAPE - FURNACE - 1 1/2"

***COMPONENT PARTS LISTED LATER IN THIS GROUP**

COPYRIGHT © 2007 WINNEBAGO INDUSTRIES INC.

HEATING & A/C GROUP (CONTINUED)

COMPONENT PARTS FOR FURNACE

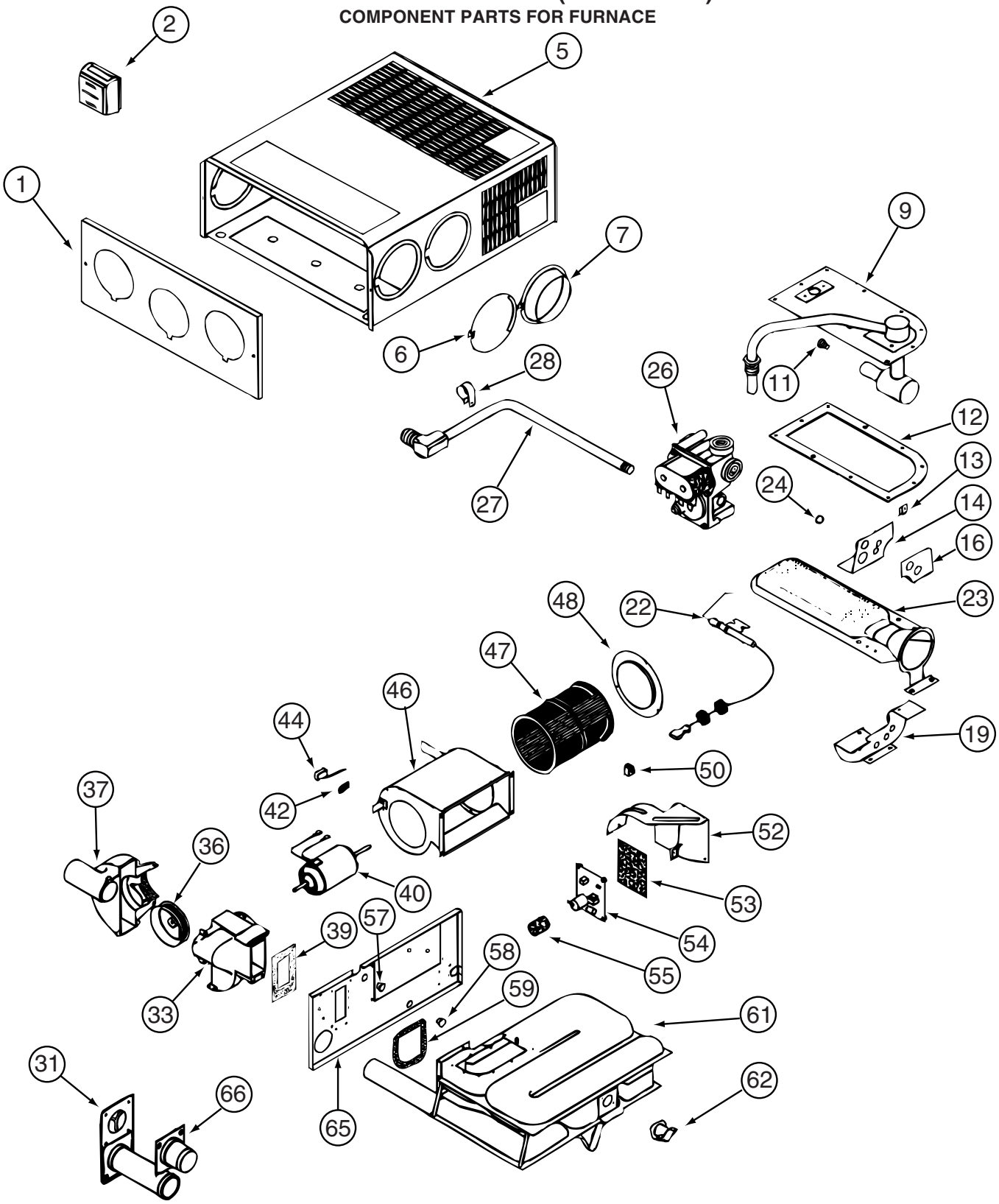

139980-02-000

COPYRIGHT © 2007 WINNEBAGO INDUSTRIES INC.

HEATING & A/C GROUP (CONTINUED)

COMPONENT PARTS FOR FURNACE (CONTINUED)

139980-02-000 (CONTNUED)

KEY	PART NUMBER	U/M	DESCRIPTION	VENDOR NO.
9	139980-01-700	EA	MANIFOLD ASSEMBLY	171571
11	092300-02-701	EA	ORIFICE-MAIN BURNER (NT-30BW	180214
12	098668-22-703	EA	GASKET - BURNER ACCESS COVER	070811
22	139980-01-701	EA	ELECTRODE	232286
23	098668-02-700	EA	BURNER ASSEMBLY,SF-30 & SF35	010745
26	098668-01-718	EA	VALVE-GAS SF S.N.974903079	161122
27	139980-01-702	EA	PIPE ASSEMBLY/GAS INLET	171574
31	098668-01-707	EA	TUBE ASSEMBLY, EXHAUST W/CAP	260231
33	139980-01-703	EA	HOUSING/COMB. - FRONT/HALF	390852
36	098668-01-706	EA	WHEEL-COMBUSTION AIR	350184
37	139980-01-704	EA	HOUSING/COMB. - REAR/HALF	390848
39	139980-01-705	EA	GASKET/FIREWALL-COMB AIR	071084
40	139980-01-706	EA	MOTOR ASSEMBLY W/GASKET	232682
42	101990-01-714	EA	GASKET-MICROSWITCH	230877
44	098668-21-700	EA	SWITCH-MICRO-W/O FLAG 3 1/4"	232261
46	139980-01-708	EA	BLOWER ASSEMBLY - ROOM AIR	390739BK
47	098668-01-711	EA	WHEEL-BLOWER, ROOM AIR	350129
48	139980-01-709	EA	ORFICE RING	390696
50	139980-01-710	EA	SWITCH - ON/OFF	232351
52	139980-01-711	EA	PANEL ASSEMBLY-MODULE BD	101663
53	139980-01-712	EA	INSULATOR - MODULE BD	070807
54	098668-22-705	EA	MODULE BD W/RELAY TIME DELAY	520820
55	139980-01-713	EA	CAP/INSULATOR-MODULE BD	070973
57	139980-01-714	EA	BUSHING - UNIVERSAL	070362
58	139980-01-715	EA	BUSHING - STRAIN RELIEF	231809
59	098668-01-716	EA	GASKET-FIREWALL,CHAMBER SIDE	070808
61	139980-01-716	EA	CHAMBER ASSEMBLY - FINAL	021149BK
62	098668-21-701	EA	SWITCH - LIMIT	232504
66	098668-01-713	EA	TUBE ASSEMBLY, INTAKE	051248

CONTACT WINNEBAGO PART SALES FOR UNLISTED COMPONENT(S)

COPYRIGHT © 2007 WINNEBAGO INDUSTRIES INC.

HEATING & A/C GROUP (CONTINUED)

COMPONENT PARTS FOR FURNACE (CONTINUED)

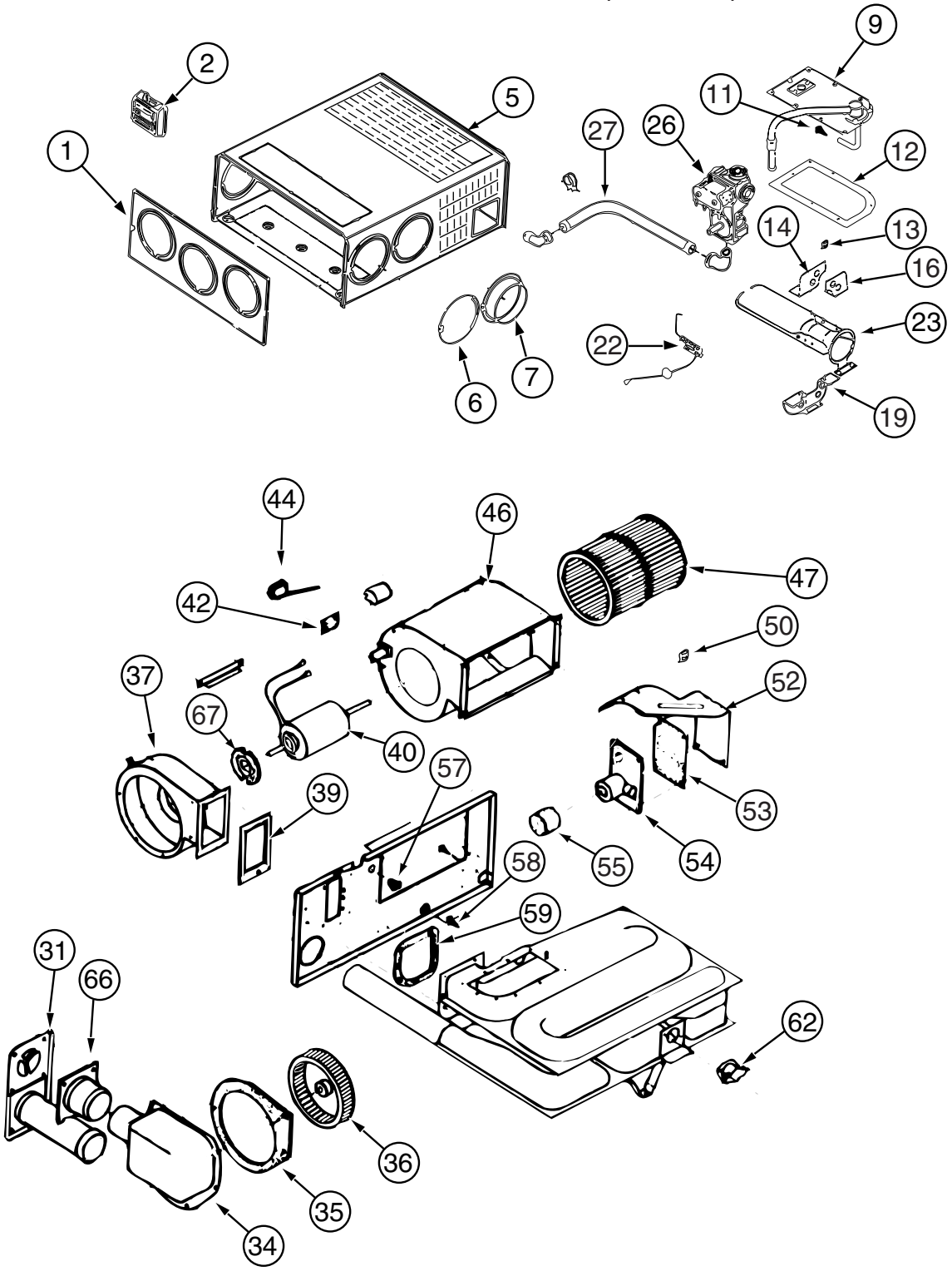

143563-02-000

COPYRIGHT © 2007 WINNEBAGO INDUSTRIES INC.

HEATING & A/C GROUP (CONTINUED)

COMPONENT PARTS FOR FURNACE (CONTINUED)

143563-02-000 (CONTINUED)

KEY	PART NUMBER	U/M	DESCRIPTION	VENDOR NO.
1	143563-01-700	EA	CABINET - FRONT	101907
2			SEE 12 VOLT WIRING AREAS FOR CORRECT THERMOSTAT	
5	143563-02-700	EA	CABINET	101915
7	075696-02-703	EA	COLLAR - DUCT	050715
9	143563-01-702	EA	MANIFOLD ASSEMBLY	171599
11	143563-02-701	EA	ORFICE - MAIN BURNER	180309
12	098668-22-703	EA	GASKET - BURNER ACCESS COVER	070811
14	143563-02-702	EA	PLATE - SECONDARY AIR/TOP BACK	063198
16	143563-02-703	EA	PLATE - SECONDARY AIR/TOP FRT	062933
19	143563-02-704	EA	PLATE - SECONDARY AIR/BOTTOM	062935
22	139980-01-701	EA	ELECTRODE	232286
23	098668-11-701	EA	BURNER ASSEMBLY, SF-42F	010799
26	098668-01-718	EA	VALVE-GAS SF S.N.974903079	161122
27	143563-01-707	EA	PIPE ASSEMBLY (GAS INLET)	171603
31	098668-01-707	EA	TUBE ASSEMBLY, EXHAUST W/CAP	260231
34	143563-01-708	EA	BOX ASM (COMB. AIR INTAKE)	051430BK
35	143563-01-709	EA	GASKET (COMB. AIR HOUSING)	071108
36	143563-01-710	EA	WHEEL (COMBUSTION AIR)	350199
37	143563-01-711	EA	HOUSING (COMBUSTION AIR)	390862BK
39	143563-01-715	EA	GASKET-FIREWALL/COMB. AIR	071107
40	143563-02-705	EA	MOTOR ASSEMBLY	232726
42	101990-01-714	EA	GASKET-MICROSWITCH	230877
44	098668-21-700	EA	SWITCH-MICRO-W/O FLAG 3 1/4"	232261
46	143563-01-713	EA	BLOWER ASSEMBLY(ROOM AIR)	390867BK
47	143563-01-714	EA	WHEEL - ROOM AIR	350198
50	139980-01-710	EA	SWITCH - ON/OFF	232351
52	139980-01-711	EA	PANEL ASSEMBLY-MODULE BD	101663
53	139980-01-712	EA	INSULATOR - MODULE BD	070807
54	098668-22-705	EA	MODULE BD W/RELAY TIME DELAY	520820
55	139980-01-713	EA	CAP/INSULATOR-MODULE BD	070973
57	139980-01-714	EA	BUSHING - UNIVERSAL	070362
58	139980-01-715	EA	BUSHING - STRAIN RELIEF	231809
59	098668-01-716	EA	GASKET-FIREWALL,CHAMBER SIDE	070808
62	143563-02-706	EA	SWITCH - LIMIT	232735
66	098668-01-713	EA	TUBE ASSEMBLY, INTAKE	051248
67	075697-07-703	EA	GASKET - MOTOR	070448
	143563-02-707	EA	CHAMBER ASM. - FINAL	021172BK
			CONTACT WINNEBAGO PART SALES FOR UNLISTED COMPONENT(S)	

COPYRIGHT © 2007 WINNEBAGO INDUSTRIES INC.

HEATING & A/C GROUP (CONTINUED)

REAR HEATER

KEY	PART NUMBER	U/M	DESCRIPTION
*	084405-01-000	EA	HEATER - REAR/DUCTED - W/MOTOR AID
	056464-10-000	EA	REGISTER W/O DAMPER - 4" DIAMETER - PLASTIC - BEIGE
	009198-01-000	FT	DUCT - HEAT - FLEXIBLE - 4" ID X 25'
	069636-02-000	EA	CONNECTOR - DUCT - 4" ID
	118761-01-000	EA	REDUCER - 4"-2" - GALVANIZED
	007108-01-000	FT	HOSE - HEATER - 5/8" ID - HI-TEMP
	079059-02-000	EA	HOSE - 90 DEGREE - .61" ID X 4" X 6"
	079059-04-000	EA	HOSE - 90 DEGREE - .61"ID X 3.07" X 3.07"
	089353-01-000	EA	UNION - 5/8" - TUBE TO TUBE

***COMPONENT PARTS LISTED LATER IN THIS GROUP**

COMPONENT PARTS FOR REAR HEATER

084405-01-000

KEY	PART NUMBER	U/M	DESCRIPTION	VENDOR NO.
	084405-01-700	EA	CORE-HEATER	FT200229
	084405-01-701	EA	FAN BLADES	HV029931
	084405-01-702	EA	MOTOR ASSEMBLY, 12 VOLT	RV010348

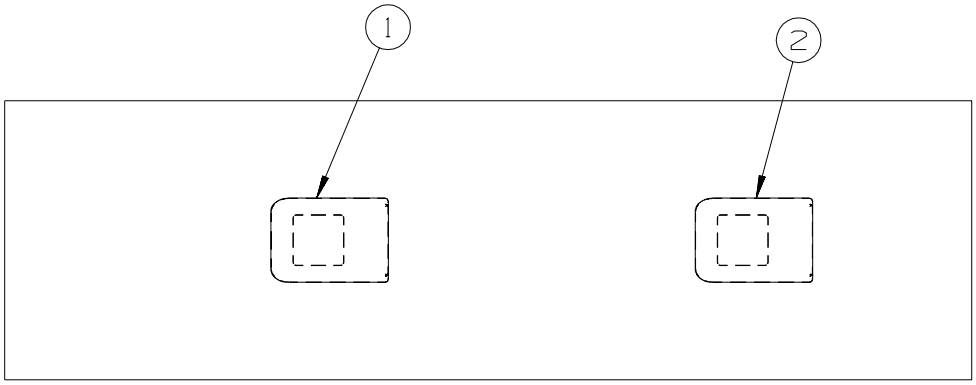

ROOF

KEY	PART NUMBER	U/M	DESCRIPTION
1*	131188-03-01A	EA	A/C/ROOF - 14,800 BTU/MACH 15 - NEW MODEL #8335B676 - WHT
1*	131187-03-01A	EA	A/C - ROOF - MACH 3 POWER SAVER - WHITE
1*	131188-04-01A	EA	A/C - ROOF - 14,800 BTU/HEAT PUMP - #8535B676- WHT - AC HEAT PUMP-1
1*	131187-04-01A	EA	A/C - ROOF - MACH 3 POWER SAVER - WHITE - AC HEAT PUMP-2 HI EFFICIENCY
1	131184-02-01A	EA	BOARD - DIVIDER - SILVER
1*	131184-01-01A	EA	CEILING ASSEMBLY - A/C DUCTED - WHITE
1*	131184-05-01A	EA	CEILING ASSEMBLY - HEAT PUMP - WHITE - AC HEAT PUMP-1/AC HEAT PUMP-2 HI EFFICIENCY
2*	131186-02-01A	EA	A/C - ROOF - MACH 1 POWER SAVER - 9,600 BTU - WHITE
2*	131187-04-01A	EA	A/C - ROOF - MACH 3 POWER SAVER - WHITE - AC HEAT PUMP-2 HI EFFICIENCY
2	131184-02-01A	EA	BOARD - DIVIDER - SILVER
2*	131184-01-01A	EA	CEILING ASSEMBLY - A/C DUCTED - WHITE
2*	131184-05-01A	EA	CEILING ASSEMBLY - HEAT PUMP - WHITE - AC HEAT PUMP-1/AC HEAT PUMP-2 HI EFFICIENCY

***COMPONENT PARTS LISTED LATER IN THIS GROUP**

COPYRIGHT © 2007 WINNEBAGO INDUSTRIES INC.

HEATING & A/C GROUP (CONTINUED)

COMPONENT PARTS FOR ROOF

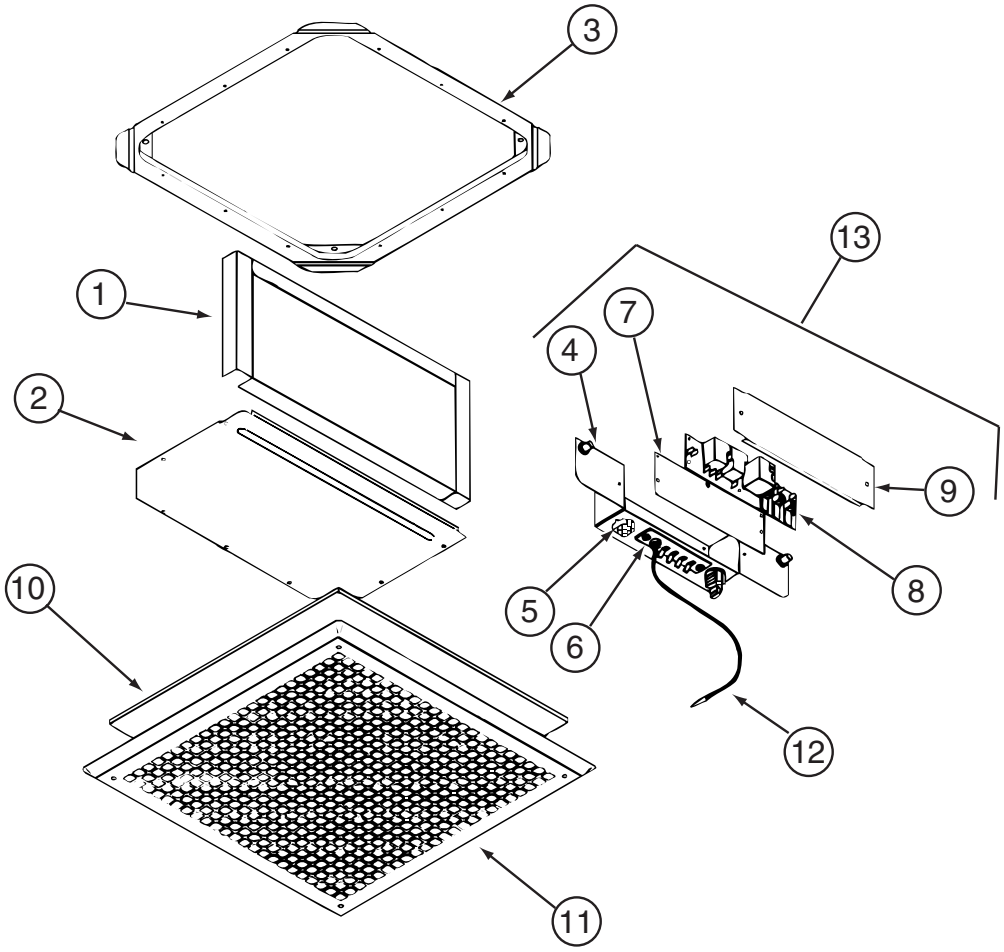

131184-01-01A

KEY	PART NUMBER	U/M	DESCRIPTION	VENDOR NO.
1	131184-01-707	EA	DUCT DIVIDER	8330-3501
5	131184-01-700	EA	PLUG ASSEMBLY	7330A389
6	131184-01-701	EA	TERMINAL BOARD	7330B3201
7	131184-01-702	EA	ISOLATOR - BLANK	7330C365
8	108892-01-702	EA	BOARD-P.C.	7330A3211
10	108892-01-703	EA	FILTER	6798A3761
11	108892-01-704	EA	GRILLE 16 3/8X16 3/8 RETURN	6798-3041
12	131184-01-704	EA	COIL SENSOR	7330-6111
13	131184-01-705	EA	JUNCTION BOX ASSEMBLY	7330B5551
	131184-01-703	EA	SMALL PARTS PKG	8330-5961
			CONTACT WINNEBAGO PART SALES FOR UNLISTED COMPONENT(S)	

COPYRIGHT © 2007 WINNEBAGO INDUSTRIES INC.

HEATING & A/C GROUP (CONTINUED)

COMPONENT PARTS FOR ROOF (CONTINUED)

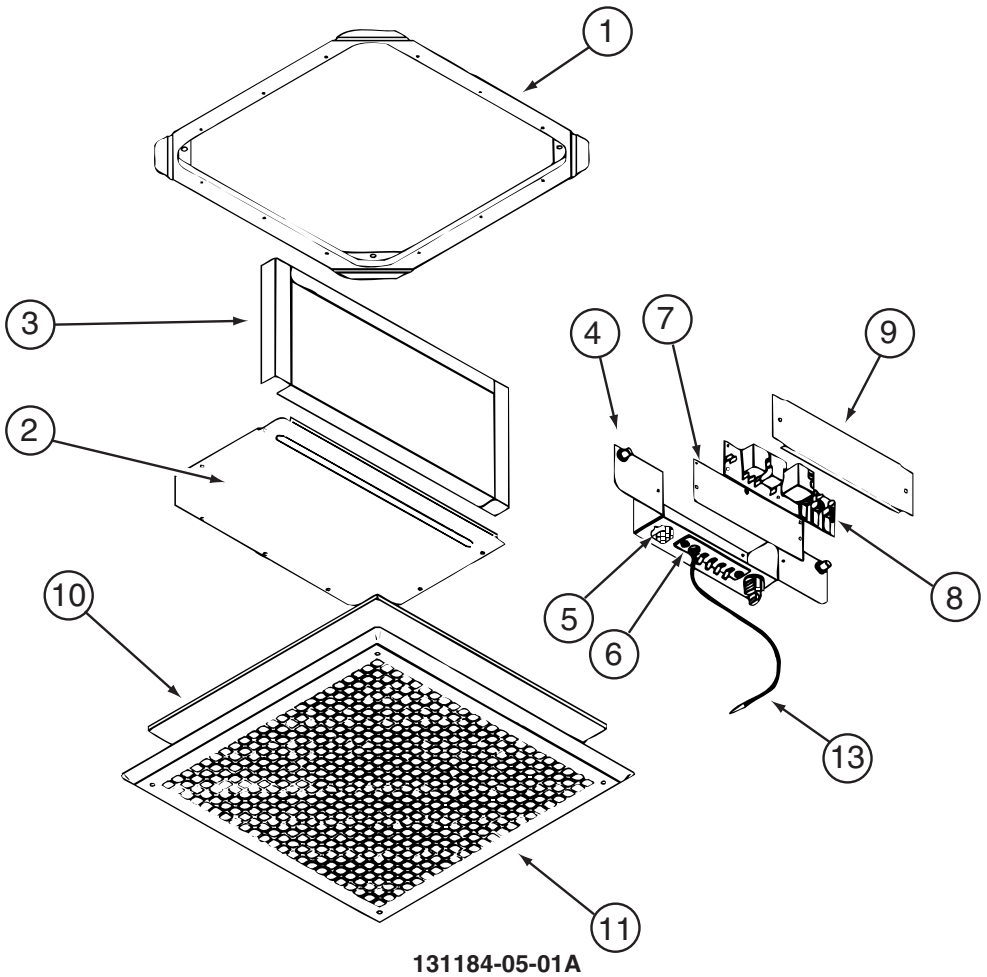

131184-05-01A

KEY	PART NUMBER	U/M	DESCRIPTION	VENDOR NO.
4	131184-05-700	EA	BOX - JUNCTION	8530-5091
5	131184-04-700	EA	PLUG ASSEMBLY	7530A340
6	131184-04-702	EA	BOARD - TERMINAL	7530B3201
7	131184-01-702	EA	ISOLATOR - BLANK	7330C365
8	131184-04-705	EA	BOARD - P.C.	7330B3311
10	108892-01-703	EA	FILTER	6798A3761
11	108892-01-704	EA	GRILLE 16 3/8X16 3/8 RETURN	6798-3041
13	105620-12-719	EA	COIL SENSOR	7330A3231
	131184-01-703	EA	SMALL PARTS PKG	8330-5961
			CONTACT WINNEBAGO PART SALES FOR UNLISTED COMPONENT(S)	

COPYRIGHT © 2007 WINNEBAGO INDUSTRIES INC.

HEATING & A/C GROUP (CONTINUED)

COMPONENT PARTS FOR ROOF (CONTINUED)

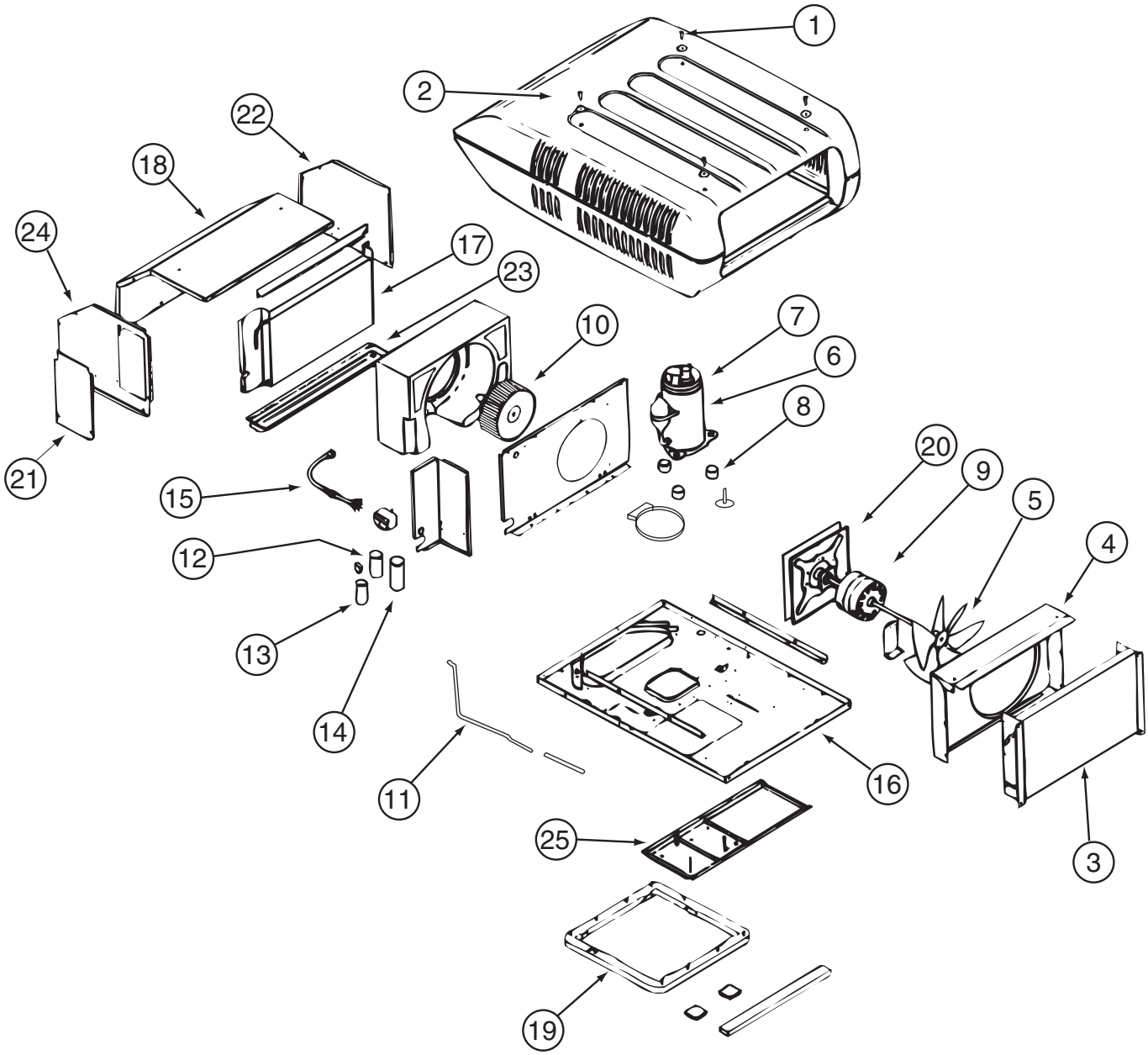

131186-02-01A

KEY	PART NUMBER	U/M	DESCRIPTION	VENDOR NO.
2	131185-03-700	EA	SHROUD - ROOF AIR	8333-4161
3	115219-01-700	EA	COIL-CONDENSER	1452A1321
5	093763-01-712	EA	BLADE-FAN-CONDENSER	6733-3221
6	126859-01-700	EA	COMPRESSOR RK124AT-001-A4Y	1450-2109
7	126859-01-701	EA	OVERLOAD PROTECTORMRA# 4761	1450-0061
8	105620-01-706	EA	MOUNTING PKG.,COMP., 3 PER	6759-3081
9	131186-01-700	EA	MOTOR - 115V, 60 HURTZ	1468-3109
10	131185-01-702	EA	BLOWER WHEEL PACKAGE	1472-1091
12	126859-01-703	EA	CAPACITOR - RUN	1499-5671
13	093763-01-704	EA	CAPACITOR-FAN	1499-5461
14	105620-10-704	EA	START COMPACITOR	1497-0861
15	105620-10-705	EA	PTCR (START DEVICE) - W/CAP.	8333A9021
18	131186-01-701	EA	EVAPORATOR COIL	1452-1521
21	131185-01-704	EA	MOTOR MOUNT & SEAL KIT	8333-5151
	093306-01-701	EA	DECAL PACKAGE, LEFT & RIGHT	6798B3591
	108889-01-710	EA	PAD-FILLER, CONDENSER SEAL	6759B3971
	126859-01-706	EA	LINE - SUCTION	7532A130
			CONTACT WINNEBAGO PART SALES FOR UNLISTED COMPONENT	

COPYRIGHT © 2007 WINNEBAGO INDUSTRIES INC.

HEATING & A/C GROUP (CONTINUED)

COMPONENT PARTS FOR ROOF (CONTINUED)

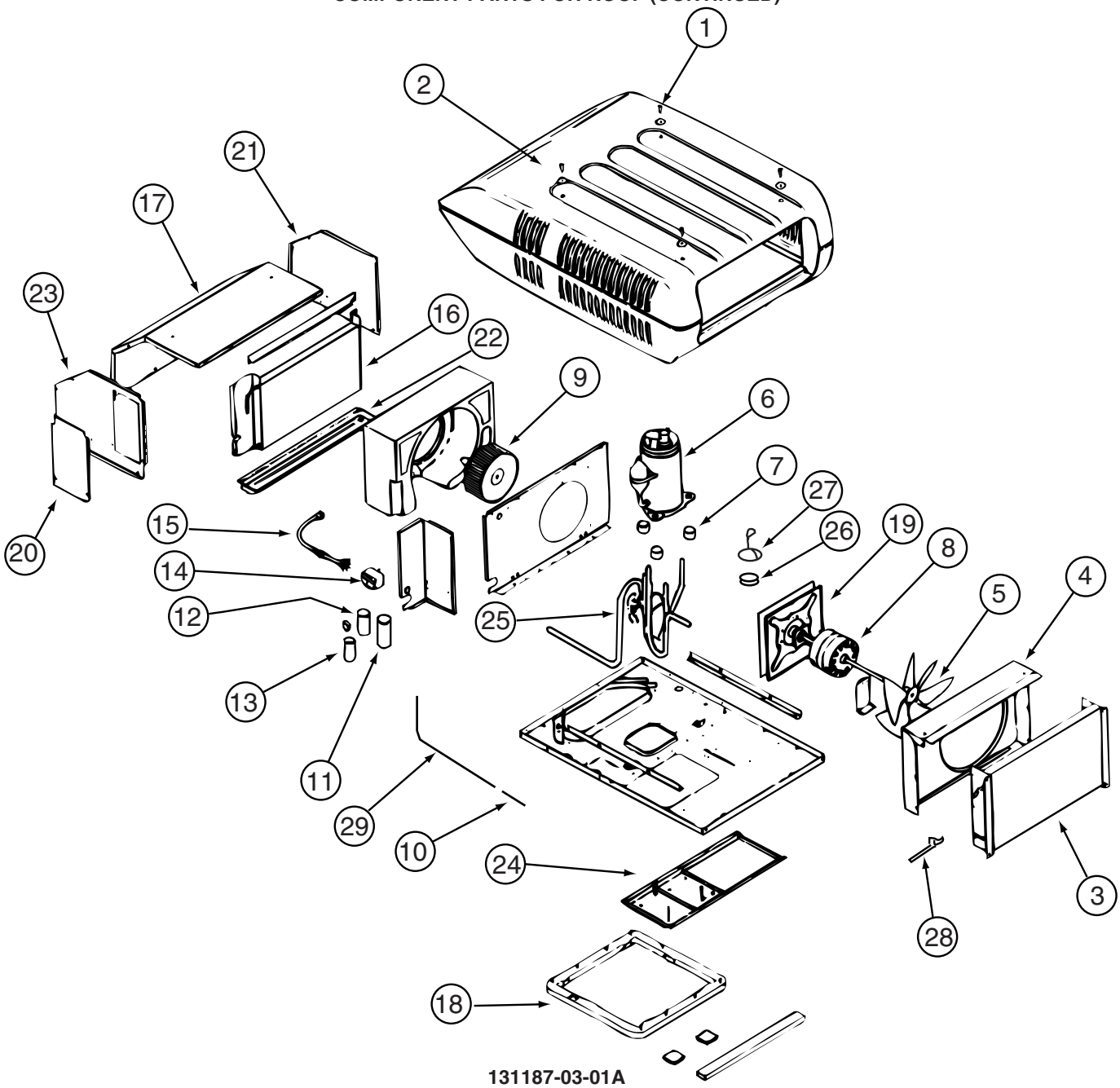

131187-03-01A

KEY	PART NUMBER	U/M	DESCRIPTION	VENDOR NO.
2	131185-03-700	EA	SHROUD - ROOF AIR	8333-4161
3	115219-01-700	EA	COIL-CONDENSER	1452A1321
5	093763-01-712	EA	BLADE-FAN-CONDENSER	6733-3221
6	126860-01-700	EA	COMPRESSOR RK136AT-002-A4Y	1450A2119
7	105620-01-706	EA	MOUNTING PKG.,COMP., 3 PER	6759-3081
8	131186-01-700	EA	MOTOR - 115V, 60 HURTZ	1468-3109
9	131185-01-702	EA	BLOWER WHEEL PACKAGE	1472-1091
11	126859-01-703	EA	CAPACITOR - RUN	1499-5671
12	105620-01-725	EA	CAPACITOR-BLOWER,I.D. 7.5MFD	1499-5461
13	105620-10-705	EA	PTCR (START DEVICE) - W/CAP.	8333A9021
16	131186-01-701	EA	EVAPORATOR COIL	1452-1521
19	131185-01-704	EA	MOTOR MOUNT & SEAL KIT	8333-5151
	093306-01-701	EA	DECAL PACKAGE, LEFT & RIGHT	6798B3591
	105620-10-704	EA	START COMPACITOR	1497-0861
	108889-01-710	EA	PAD-FILLER, CONDENSER SEAL	6759B3971
	126859-01-706	EA	LINE - SUCTION	7532A130
	126860-01-701	EA	OVERLOAD PROTECTOR MRA# 1460	1450-0071
			CONTACT WINNEBAGO PART SALES FOR UNLISTED COMPONENT	

COPYRIGHT © 2007 WINNEBAGO INDUSTRIES INC.

HEATING & A/C GROUP (CONTINUED)

COMPONENT PARTS FOR ROOF (CONTINUED)

131187-04-01A

KEY	PART NUMBER	U/M	DESCRIPTION	VENDOR NO.
2	131185-03-700	EA	SHROUD - ROOF AIR	8333-4161
3	131188-02-700	EA	CONDENSER COIL	1452-1441
5	093763-01-712	EA	BLADE-FAN-CONDENSER	6733-3221
6	126860-01-700	EA	COMPRESSOR RK136AT-002-A4Y	1450A2119
7	105620-01-706	EA	MOUNTING PKG.,COMP., 3 PER	6759-3081
8	131186-01-700	EA	MOTOR - 115V, 60 HURTZ	1468-3109
9	131185-01-702	EA	BLOWER WHEEL PACKAGE	1472-1091
10	105620-12-711	EA	RESTRICTOR - BY FLOW	1454-2521
11	126859-01-703	EA	CAPACITOR - RUN	1499-5671
12	093763-01-704	EA	CAPACITOR-FAN	1499-5461
13	105620-10-705	EA	PTCR (START DEVICE) - W/CAP.	8333A9021
16	131186-01-701	EA	EVAPORATOR COIL	1452-1521
18	037648-01-714	EA	GASKET PACKAGE	8332-3301
19	131185-01-704	EA	MOTOR MOUNT & SEAL KIT	8333-5151
25	131188-02-704	EA	VALVE/REVERSE ASSEMBLY	7535A5301
26	105620-12-708	EA	COIL - SOLENOID	1460-1081
27	131188-02-705	EA	WIRE HARNESS F/SOLENOID	7535-109
28	131188-02-706	EA	SWITCH - FREEZE	1460-2041
29	131188-02-707	EA	LIQUID LINE	7535-135
			CONTACT WINNEBAGO PART SALES FOR UNLISTED COMPONENT	

COPYRIGHT © 2007 WINNEBAGO INDUSTRIES INC.

HEATING & A/C GROUP (CONTINUED)

COMPONENT PARTS FOR ROOF (CONTINUED)

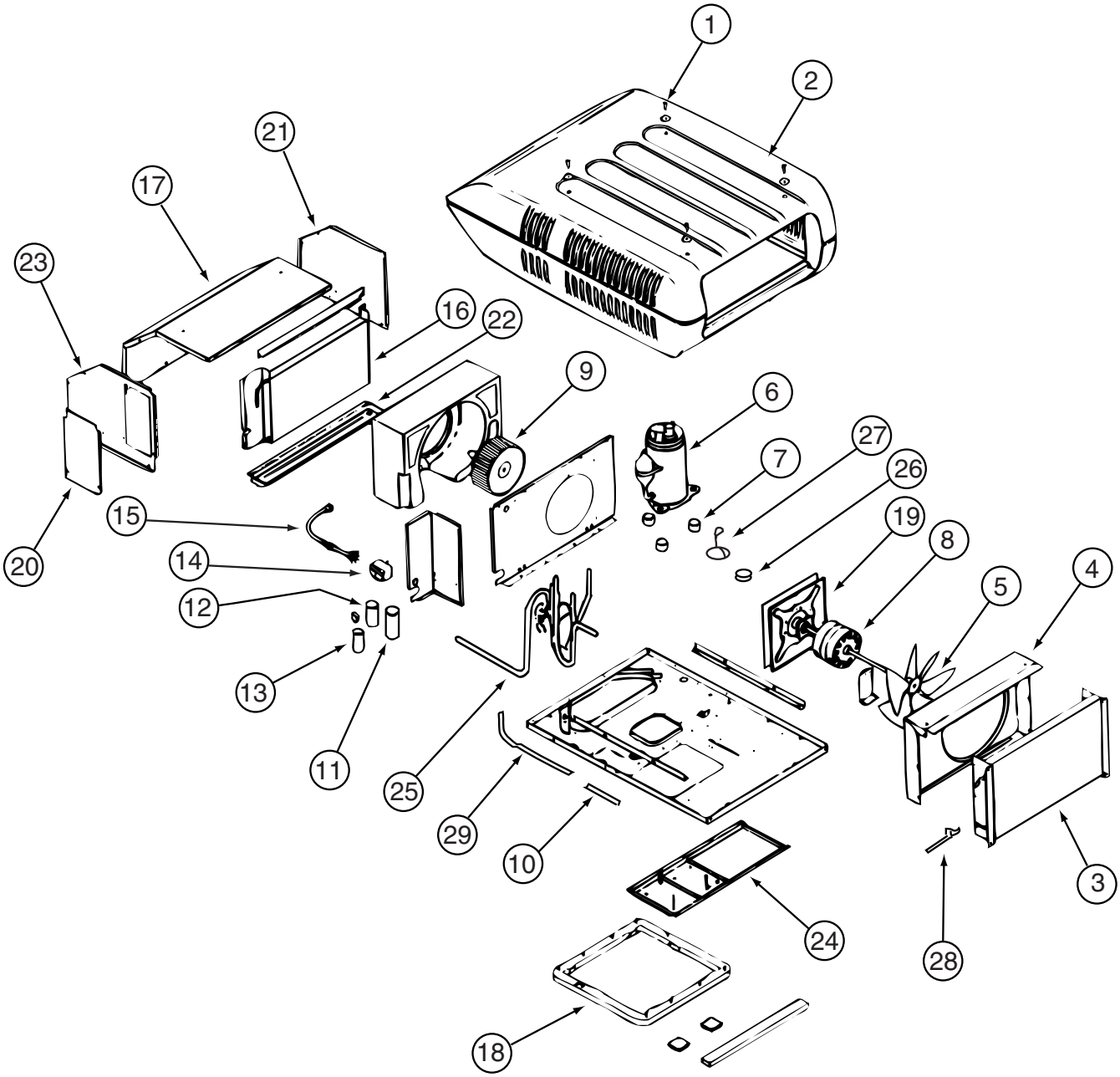

131188-03-01A

KEY	PART NUMBER	U/M	DESCRIPTION	VENDOR NO.
2	131185-03-700	EA	SHROUD-ROOF AIR W/HAIL GUARD	8333-4161
3	115219-01-700	EA	COIL-CONDENSER	1452A1321
5	093763-01-712	EA	BLADE-FAN-CONDENSER	6733-3221
6	131188-01-700	EA	COMPRESSOR - TECUMSEH	1450A2609
7	105620-01-706	EA	MOUNTING PKG.,COMP., 3 PER	6759-3081
8	131185-01-701	EA	MOTOR (115V, 60HZ)	1468-3069
9	131185-01-702	EA	BLOWER WHEEL PACKAGE	1472-1091
11	131188-01-701	EA	RUN CAP. (COMP-40MFD/370V)	1499-5721
12	108889-01-708	EA	CAPACITOR-FAN, 7.5MFD. 370U	1499-5461
13	126859-01-704	EA	CAPACITOR - START	1497-0871
14	091225-01-709	EA	RELAY-START	1497-4131
16	131186-01-701	EA	EVAPORATOR COIL	1452-1521
18	037648-01-714	EA	GASKET PACKAGE	8332-3301
19	131185-01-704	EA	MOTOR MOUNT & SEAL KIT	8333-5151
	093306-01-701	EA	DECAL PACKAGE, LEFT & RIGHT	6798B3591
	108889-01-710	EA	PAD-FILLER, CONDENSER SEAL	6759B3971
	131188-01-702	EA	LINE - SUCTION	7335A134
	131188-01-703	EA	LINE - DISCHARGE	7335A135
			CONTACT WINNEBAGO PART SALES FOR UNLISTED COMPONENT(S)	

COPYRIGHT © 2007 WINNEBAGO INDUSTRIES INC.

HEATING & A/C GROUP (CONTINUED)

COMPONENT PARTS FOR ROOF (CONTINUED)

131188-04-01A

KEY	PART NUMBER	U/M	DESCRIPTION	VENDOR NO.
3	131188-02-700	EA	CONDENSER COIL	1452-1441
5	093763-01-712	EA	BLADE-FAN-CONDENSER	6733-3221
6	131188-02-701	EA	COMPRESSOR(TECUMSEH-RK225AT)	1450A2069
7	105620-01-706	EA	MOUNTING PKG.,COMP., 3 PER	6759-3081
8	131185-01-701	EA	MOTOR (115V, 60HZ)	1468-3069
9	131185-01-702	EA	BLOWER WHEEL PACKAGE	1472-1091
10	131188-02-702	EA	RESTRICTOR - BY FLOW	1454-2501
11	131188-01-701	EA	RUN CAP. (COMP-40MFD/370V)	1499-5721
12	093763-01-704	EA	CAPACITOR-FAN (INDOOR MOTOR)	1499-5461
13	131188-02-703	EA	CAPACITOR-START(21-25MFD)	1497-0211
14	091225-01-709	EA	RELAY-START	1497-4131
16	131186-01-701	EA	EVAPORATOR COIL	1452-1521
18	037648-01-714	EA	GASKET PACKAGE	8332-3301
19	131185-01-704	EA	MOTOR MOUNT & SEAL KIT	8333-5151
25	131188-02-704	EA	VALVE/REVERSE ASSEMBLY	7535A5301
26	105620-12-708	EA	COIL - SOLENOID	1460-1081
27	131188-02-705	EA	WIRE HARNESS F/SOLENOID	7535-109
28	131188-02-706	EA	SWITCH - FREEZE	1460-2041
29	131188-02-707	EA	LIQUID LINE	7535-135
			CONTACT WINNEBAGO PART SALES FOR UNLISTED COMPONENT(S)	

COPYRIGHT © 2007 WINNEBAGO INDUSTRIES INC.

INTERIOR FINISH GROUP

MOLDINGS & TRIMS
PORTSMOUTH OAK, SIERRA MAPLE

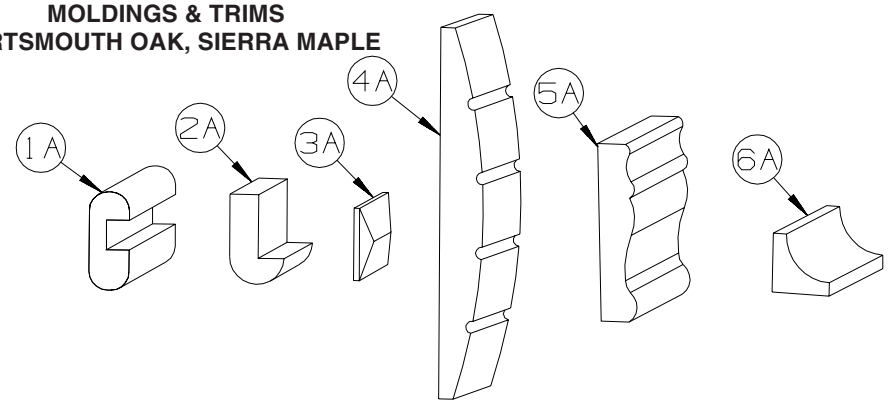

KEY	PART NUMBER	U/M	DESCRIPTION
1A	M09412-62-N42	EA	MOLDING/SHELF EDGE - .6" X 1.3" X 96" - PORTSMOUTH OAK
1A	M09412-62-M52	EA	MOLDING/SHELF EDGE - .6" X 1.3" X 96" - CHERRY - CONCERT CHERRY
1A	M09412-62-M62	EA	MOLDING/SHELF EDGE - .6" X 1.3" X 96" - WASHED MAPLE - WASHED MAPLE
1A	M09412-62-RC3	EA	MOLDING/SHELF EDGE - .6" X 1.3" X 96" - HONEY CHERRY - HONEY CHERRY
1A	M09412-62-SA3	EA	MOLDING/SHELF EDGE - .6" X 1.3" X 96" - MAPLE - SIERRA MAPLE
2A	M09450-77-PC0	EA	MOLDING - TRIM/HDWD W/LIP -.4"X3.2"X79.6" - PORTSMOUTH OAK
2A	M09450-77-PC1	EA	MOLDING - TRIM/HDWD W/LIP -.4"X3.2"X79.6" - CONCERT CHERRY
2A	M09450-77-PC2	EA	MOLDING - TRIM/HDWD W/LIP -.4"X3.2"X79.6" - WASHED MAPLE
2A	M09450-77-RC3	EA	MOLDING - TRIM/HDWD W/LIP -.4"X3.2"X79.6" - HONEY CHERRY
2A	M09501-31-TG0	EA	MOLDING/TRIM - .8" X 3.5" X 86.2" - PORTSMOUTH OAK
2A	M09501-31-TG1	EA	MOLDING/TRIM - .8" X 3.5" X 86.2" - CONCERT CHERRY
2A	M09501-31-TG2	EA	MOLDING/TRIM - .8" X 3.5" X 86.2" - WASHED MAPLE
2A	M09501-31-TG3	EA	MOLDING/TRIM - .8" X 3.5" X 86.2" - HONEY CHERRY
2A	M09501-31-TD3	EA	MOLDING/TRIM - .8" X 3.5" X 86.2" - SIERRA MAPLE
2A	M09501-32-TD3	EA	MOLDING/TRIM - W/NOTCH - .8" X 2.5" X 86.2"
2A	M09501-32-TG0	EA	MOLDING/TRIM - W/NOTCH - .8" X 2.5" X 86.2" - PORTSMOUTH OAK
2A	M09501-32-TG1	EA	MOLDING/TRIM - W/NOTCH - .8" X 2.5" X 86.2"-CONCERT CHERRY
2A	M09501-32-TG2	EA	MOLDING/TRIM - W/NOTCH - .8" X 2.5" X 86.2" - WASHED MAPLE,
2A	M09501-32-TG3	EA	MOLDING/TRIM - W/NOTCH - .8" X 2.5" X 86.2" - HONEY CHERRY
2A	M09503-52-T77	EA	MOLDING/TRIM - .75" X 1.2" X 86.5" - PORTSMOUTH OAK
2A	M09503-52-T78	EA	MOLDING/TRIM - .75" X 1.2" X 86.5" - CONCERT CHERRY
2A	M09503-52-T79	EA	MOLDING/TRIM - .75" X 1.2" X 86.5" - WASHED MAPLE
2A	M09503-52-T80	EA	MOLDING/TRIM - .75" X 1.2" X 86.5" - SIERRA MAPLE
2A	M09511-43-T77	EA	MOLDING - TRIM - W/NOTCH - .8" X 1.4" X 86.3" - PORTSMOUTH OAK
2A	M09511-43-T78	EA	MOLDING - TRIM - W/NOTCH - .8" X 1.4" X 86.3" - CONCERT CHERRY
2A	M09511-43-T79	EA	MOLDING - TRIM - W/NOTCH - .8" X 1.4" X 86.3" - WASHED MAPLE
2A	M09438-25-RA3	EA	MOLDING - HARDWOOD-W/NOTCH - 1.4"X 80.2" - CHERRY/HONEY - HONEY CHERRY
2A	M09511-43-T80	EA	MOLDING - TRIM - W/NOTCH - .8" X 1.4" X 86.3" - SIERRA MAPLE
2A	M09511-44-T77	EA	MOLDING - TRIM - W/NOTCH - 1" X 86.4" - PORTSMOUTH OAK
2A	M09511-44-T78	EA	MOLDING - TRIM - W/NOTCH - 1" X 86.4" - CONCERT CHERRY
2A	M09511-44-T79	EA	MOLDING - TRIM - W/NOTCH - 1" X 86.4" - WASHED MAPLE
2A	M09454-25-RA3	EA	MOLDING - HARDWOOD-W/NOTCH - 1" X 77.6" - HONEY CHERRY
2A	M09511-44-T80	EA	MOLDING - TRIM - W/NOTCH - 1" X 86.4" - SIERRA MAPLE
2A	M09515-72-TD0	EA	MOLDING/TRIM - .8" X 2.2" X 86.1" - PORTSMOUTH OAK
2A	M09515-72-TD1	EA	MOLDING/TRIM - .8" X 2.2" X 86.1" - CONCERT CHERRY
2A	M09515-72-TD2	EA	MOLDING/TRIM - .8" X 2.2" X 86.1" - WASHED MAPLE
2A	M09515-72-TD3	EA	MOLDING/TRIM - .8" X 2.2" X 86.1" - SIERRA MAPLE
2A	M09515-73-TD0	EA	MOLDING/TRIM - 4" X 86.1" - PORTSMOUTH OAK
2A	M09515-73-TD1	EA	MOLDING/TRIM - 4" X 86.1" - CONCERT CHERRY
2A	M09515-73-TD2	EA	MOLDING/TRIM - 4" X 86.1" - WASHED MAPLE
2A	M09515-73-TD3	EA	MOLDING/TRIM - 4" X 86.1" - SIERRA MAPLE
3A	M09471-37-R44	EA	MOLDING - TRIM/VEE - .2" X 1" X 33" - PORTSMOUTH OAK
3A	M09471-37-R45	EA	MOLDING - TRIM/VEE - .2" X 1" X 33" - CONCERT CHERRY
3A	M09471-37-R46	EA	MOLDING - TRIM/VEE - .2" X 1" X 33" - WASHED MAPLE
3A	M09471-37-SD3	EA	MOLDING - TRIM/VEE - .2" X 1" X 33" - HONEY CHERRY
3A	M09471-91-R68	EA	MOLDING - TRIM/VEE - .2" X 1" X 34.4" - PORTSMOUTH OAK
3A	M09471-91-R69	EA	MOLDING - TRIM/VEE - .2" X 1" X 34.4" - CONCERT CHERRY
3A	M09471-91-R76	EA	MOLDING - TRIM/VEE - .2" X 1" X 34.4" - WASHED MAPLE
3A	M09471-91-SA3	EA	MOLDING - TRIM/VEE - .2" X 1" X 34.4" - SIERRA MAPLE
3A	M09477-88-S34	EA	MOLDING - TRIM/VEE - .2" X 1" X 19.9" - WASHED MAPLE
3A	M09477-88-S35	EA	MOLDING - TRIM/VEE - .2" X 1" X 19.9" - SIERRA MAPLE
3A	M09501-30-SD0	EA	MOLDING - TRIM/VEE - .2" X 1" X 35.1" - PORTSMOUTH OAK

COPYRIGHT © 2007 WINNEBAGO INDUSTRIES INC.

INTERIOR FINISH GROUP (CONTINUED)

MOLDINGS & TRIMS (CONTINUED)

KEY	PART NUMBER	U/M	DESCRIPTION
3A	M09501-30-SD1	EA	MOLDING - TRIM/VEE - .2" X 1" X 35.1" - CONCERT CHERRY
3A	M09501-30-SD2	EA	MOLDING - TRIM/VEE - .2" X 1" X 35.1" - WASHED MAPLE
3A	M09501-30-SD3	EA	MOLDING - TRIM/VEE - .2" X 1" X 35.1" - HONEY CHERRY
3A	M09501-37-TG0	EA	MOLDING - TRIM/VEE - .2" X 1" X 19.2" - PORTSMOUTH OAK
3A	M09501-37-TG1	EA	MOLDING - TRIM/VEE - .2" X 1" X 19.2" - CONCERT CHERRY
3A	M09501-37-TG2	EA	MOLDING - TRIM/VEE - .2" X 1" X 19.2" - WASHED MAPLE
3A	M09501-37-TD3	EA	MOLDING - TRIM/VEE - .2" X 1" X 19.2" - SIERRA MAPLE
3A	M09501-37-TG3	EA	MOLDING - TRIM/VEE - .2" X 1" X 19.2" - HONEY CHERRY
3A	M09501-63-T77	EA	MOLDING - TRIM/VEE - .2" X 1" X 15" - PORTSMOUTH OAK
3A	M09501-63-T78	EA	MOLDING - TRIM/VEE - .2" X 1" X 15" - CONCERT CHERRY
3A	M09501-63-T79	EA	MOLDING - TRIM/VEE - .2" X 1" X 15" - WASHED MAPLE
3A	M09501-63-T80	EA	MOLDING - TRIM/VEE - .2" X 1" X 15" - SIERRA MAPLE
3A	M09503-62-TG0	EA	MOLDING - TRIM/VEE - .2" X 1" X 26.3" - PORTSMOUTH OAK
3A	M09503-62-TG1	EA	MOLDING - TRIM/VEE - .2" X 1" X 26.3" - CONCERT CHERRY
3A	M09503-62-TG2	EA	MOLDING - TRIM/VEE - .2" X 1" X 26.3" - WASHED MAPLE
3A	M09503-62-TG3	EA	MOLDING - TRIM/VEE - .2" X 1" X 26.3" - HONEY CHERRY
3A	M09511-90-TG0	EA	MOLDING - TRIM/VEE - .2" X 1" X 42.1" - PORTSMOUTH OAK
3A	M09511-90-TG1	EA	MOLDING - TRIM/VEE - .2" X 1" X 42.1" - CONCERT CHERRY
3A	M09511-90-TG3	EA	MOLDING - TRIM/VEE - .2" X 1" X 42.1" - HONEY CHERRY
3A	M09511-90-TG2	EA	MOLDING - TRIM/VEE - .2" X 1" X 42.1" - WASHED MAPLE
3A	M09515-71-T78	EA	MOLDING - TRIM/VEE - .2" X 1" X 14.9" - CONCERT CHERRY
3A	M09515-71-T77	EA	MOLDING - TRIM/VEE - .2" X 1" X 14.9" - PORTSMOUTH OAK
3A	M09515-71-T80	EA	MOLDING - TRIM/VEE - .2" X 1" X 14.9" - SIERRA MAPLE
3A	M09515-71-T79	EA	MOLDING - TRIM/VEE - .2" X 1" X 14.9" - WASHED MAPLE
3A	M09520-15-TD0	EA	MOLDING - TRIM/VEE - .2" X 1" X 15.3" - PORTSMOUTH OAK
3A	M09520-15-TD1	EA	MOLDING - TRIM/VEE - .2" X 1" X 15.3" - CONCERT CHERRY
3A	M09520-15-TD2	EA	MOLDING - TRIM/VEE - .2" X 1" X 15.3" - WASHED MAPLE
3A	M09520-15-TD3	EA	MOLDING - TRIM/VEE - .2" X 1" X 15.3" - SIERRA MAPLE
3A	M09520-96-T59	EA	MOLDING - TRIM/VEE - .2" X 1" X 32.7" - PORTSMOUTH OAK
3A	M09520-96-T60	EA	MOLDING - TRIM/VEE - .2" X 1" X 32.7" - CONCERT CHERRY
3A	M09520-96-T61	EA	MOLDING - TRIM/VEE - .2" X 1" X 32.7" - WASHED MAPLE
3A	M09520-96-TP0	EA	MOLDING - TRIM/VEE - .2" X 1" X 32.7" - SIERRA MAPLE
3A	M09511-32-T77	EA	MOLDING - TRIM/VEE - .4" X 1" X 26.8" - PORTSMOUTH OAK
3A	M09511-32-T78	EA	MOLDING - TRIM/VEE - .4" X 1" X 26.8" - CONCERT CHERRY
3A	M09511-32-T79	EA	MOLDING - TRIM/VEE - .4" X 1" X 26.8" - WASHED MAPLE
3A	M09511-32-T80	EA	MOLDING - TRIM/VEE - .4" X 1" X 26.8" - SIERRA MAPLE
3A	M09511-84-T77	EA	MOLDING - TRIM/VEE - .4" X 1" X 13.5" - PORTSMOUTH OAK
3A	M09511-84-T78	EA	MOLDING - TRIM/VEE - .4" X 1" X 13.5" - CONCERT CHERRY
3A	M09511-84-T79	EA	MOLDING - TRIM/VEE - .4" X 1" X 13.5" - WASHED MAPLE
3A	M09511-84-T80	EA	MOLDING - TRIM/VEE - .4" X 1" X 13.5" - SIERRA MAPLE
3A	M09511-85-T77	EA	MOLDING - TRIM/VEE - .4" X 1" X 10.7" - PORTSMOUTH OAK
3A	M09511-85-T78	EA	MOLDING - TRIM/VEE - .4" X 1" X 10.7" - CONCERT CHERRY
3A	M09511-85-T79	EA	MOLDING - TRIM/VEE - .4" X 1" X 10.7" - WASHED MAPLE
3A	M09511-85-T80	EA	MOLDING - TRIM/VEE - .4" X 1" X 10.7" - SIERRA MAPLE
3A	M09511-86-T77	EA	MOLDING - TRIM/VEE - .4" X 1" X 28.3" - PORTSMOUTH OAK
3A	M09511-86-T78	EA	MOLDING - TRIM/VEE - .4" X 1" X 28.3" - CONCERT CHERRY
3A	M09511-86-T79	EA	MOLDING - TRIM/VEE - .4" X 1" X 28.3" - WASHED MAPLE
3A	M09511-86-T80	EA	MOLDING - TRIM/VEE - .4" X 1" X 28.3" - SIERRA MAPLE
3A	M09477-63-S46	EA	MOLDING - TRIM/VEE - .4" X 1" X 64.1" - PORTSMOUTH OAK - BATH DOOR TRIM
3A	M09477-63-S47	EA	MOLDING - TRIM/VEE - .4" X 1" X 64.1" - CONCERT CHERRY - BATH DOOR TRIM
3A	M09477-63-S48	EA	MOLDING - TRIM/VEE - .4" X 1" X 64.1" - WASHED MAPLE - BATH DOOR TRIM
3A	M09477-63-SR0	EA	MOLDING - TRIM/VEE - .4" X 1" X 64.1" - SIERRA MAPLE - BATH DOOR TRIM
3A	M09477-64-S46	EA	MOLDING - TRIM/VEE - .4" X 1" X 14.9" - PORTSMOUTH OAK - BATH DOOR TRIM
3A	M09477-64-S47	EA	MOLDING - TRIM/VEE - .4" X 1" X 14.9" - CONCERT CHERRY - BATH DOOR TRIM
3A	M09477-64-S48	EA	MOLDING - TRIM/VEE - .4" X 1" X 14.9" - WASHED MAPLE - BATH DOOR TRIM
3A	M09477-64-SR0	EA	MOLDING - TRIM/VEE - .4" X 1" X 14.9" - SIERRA MAPLE - BATH DOOR TRIM
4A	M09462-54-R89	EA	MOLDING - FLUTED, CURVED - .6” X 6” X 82.7” - PORTSMOUTH OAK
4A	M09462-54-R90	EA	MOLDING - FLUTED, CURVED - .6” X 6” X 82.7” - CONCERT CHERRY
4A	M09462-54-R91	EA	MOLDING - FLUTED, CURVED - .6” X 6” X 82.7” - WASHED MAPLE
4A	M09462-54-RE3	EA	MOLDING - FLUTED, CURVED - .6” X 6” X 82.7” - HONEY CHERRY

COPYRIGHT © 2007 WINNEBAGO INDUSTRIES INC.

INTERIOR FINISH GROUP (CONTINUED)

MOLDINGS & TRIMS (CONTINUED)

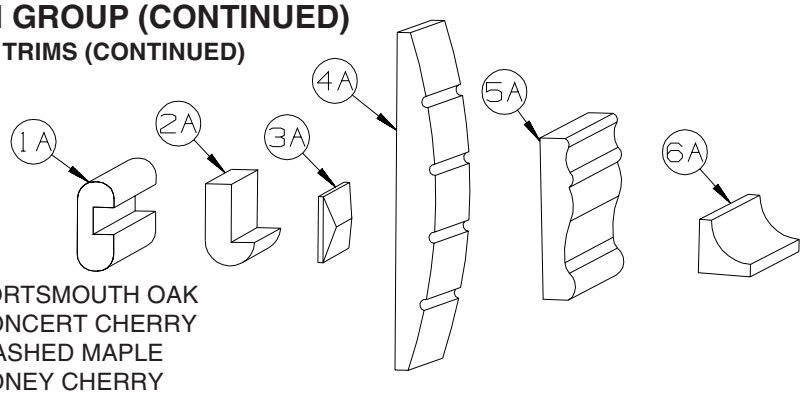

KEY	PART NUMBER	U/M	DESCRIPTION
5A	M09462-66-R74	EA	TRIM - RAIL - .5” X 2.4” X 96” - PORTSMOUTH OAK
5A	M09462-66-R75	EA	TRIM - RAIL - .5” X 2.4” X 96” - CONCERT CHERRY
5A	M09462-66-R76	EA	TRIM - RAIL - .5” X 2.4” X 96” - WASHED MAPLE
5A	M09462-66-RE0	EA	TRIM - RAIL - .5” X 2.4” X 96” - HONEY CHERRY
5A	M09462-66-SA3	EA	TRIM - RAIL - .5” X 2.4” X 96” - SIERRA MAPLE
6A	M09471-79-R38	EA	MOLDING - TRIM/COVE - .8" X .8" X 95.8" - OAK/PORTS OAK - PORTSMOUTH OAK
6A	M09471-79-R39	EA	MOLDING - TRIM/COVE - .8" X .8" X 95.8" - CHERRY/CHERRY - CONCERT CHERRY
6A	M09471-79-R46	EA	MOLDING - TRIM/COVE - .8" X .8" X 95.8" - MAPLE/MAPLE - WASHED MAPLE
6A	M09471-79-RE0	EA	MOLDING - TRIM/COVE - .8" X .8" X 95.8" - HONEY/CHERRY- HONEY CHERRY
6A	M09471-79-SA3	EA	MOLDING - TRIM/COVE - .8" X .8" X 95.8" - HONEY/MAPLE - SIERRA MAPLE

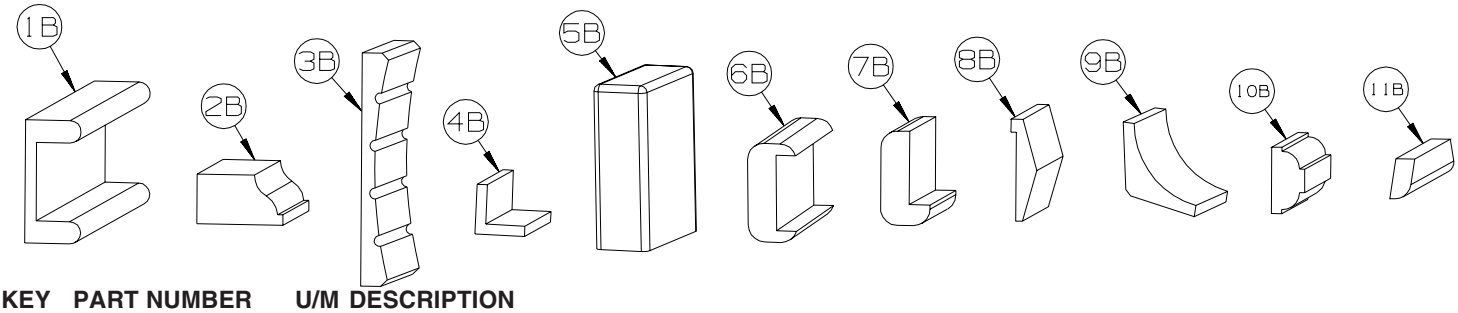

KEY	PART NUMBER	U/M	DESCRIPTION
1B	M09501-84-TG0	EA	MOLDING/TRIM - CAP/WALL - 2.2" X 85.9" - PORTSMOUTH OAK
1B	M09501-84-TG1	EA	MOLDING/TRIM - CAP/WALL - 2.2" X 85.9" - CONCERT CHERRY
1B	M09501-84-TG2	EA	MOLDING/TRIM - CAP/WALL - 2.2" X 85.9" - WASHED MAPLE
1B	M09501-84-TG3	EA	MOLDING/TRIM - CAP/WALL - 2.2" X 85.9" - HONEY CHERRY
2B	M09511-28-T77	EA	MOLDING/TRIM - .8" X 1.3" X 91.8" - PORTSMOUTH OAK
2B	M09511-28-T78	EA	MOLDING/TRIM - .8" X 1.3" X 91.8" - CONCERT CHERRY
2B	M09511-28-T79	EA	MOLDING/TRIM - .8" X 1.3" X 91.8" - WASHED MAPLE
2B	M09511-28-T80	EA	MOLDING/TRIM - .8" X 1.3" X 91.8" - SIERRA MAPLE
3B	M09511-73-TE4	EA	MOLDING/TRIM - FLUTED - 4.1" X 92.5" - PORTSMOUTH OAK
3B	M09511-73-TE5	EA	MOLDING/TRIM - FLUTED - 4.1" X 92.5" - CONCERT CHERRY
3B	M09511-73-TE6	EA	MOLDING/TRIM - FLUTED - 4.1" X 92.5" - WASHED MAPLE
3B	M09511-73-TE7	EA	MOLDING/TRIM - FLUTED - 4.1" X 92.5" - SIERRA MAPLE
4B	M09511-81-TA0	EA	MOLDING/TRIM - FLUTED - 4.1" X 92.5" - PORTSMOUTH OAK
4B	M09511-81-TA1	EA	MOLDING/TRIM - FLUTED - 4.1" X 92.5" - CONCERT CHERRY
4B	M09511-81-TA2	EA	MOLDING/TRIM - FLUTED - 4.1" X 92.5" - WASHED MAPLE
4B	M09511-81-TA3	EA	MOLDING/TRIM - FLUTED - 4.1" X 92.5" - SIERRA MAPLE
5B	M09515-81-T01	EA	MOLDING/HARDWOOD STRAIGHT - 74.3” - WASHED MAPLE
5B	M09515-81-T02	EA	MOLDING/HARDWOOD STRAIGHT - 74.3” - HONEY CHERRY
6B	M09511-42-T77	EA	MOLDING - TRIM - W/NOTCH - 1.5" X 86.4" - PORTSMOUTH OAK
6B	M09511-42-T78	EA	MOLDING - TRIM - W/NOTCH - 1.5" X 86.4" - CONCERT CHERRY
6B	M09511-42-T79	EA	MOLDING - TRIM - W/NOTCH - 1.5" X 86.4" - WASHED MAPLE
6B	M09511-42-T80	EA	MOLDING - TRIM - W/NOTCH - 1.5" X 86.4" - SIERRA MAPLE
7B	M09515-18-T77	EA	MOLDING - HARDWOOD-W/NOTCH - 1.4"X 86.2" - PORTSMOUTH OAK
7B	M09515-18-T78	EA	MOLDING - HARDWOOD-W/NOTCH - 1.4"X 86.2" - CONCERT CHERRY
7B	M09515-18-T79	EA	MOLDING - HARDWOOD-W/NOTCH - 1.4"X 86.2" - WASHED MAPLE
7B	M09515-18-T80	EA	MOLDING - HARDWOOD-W/NOTCH - 1.4"X 86.2" - SIERRA MAPLE
8B	M09515-52-TG0	EA	MOLDING - TRIM/VEE - 1.5" X 73.9" - PORTSMOUTH OAK
8B	M09515-52-TG1	EA	MOLDING - TRIM/VEE - 1.5" X 73.9" - CONCERT CHERRY
8B	M09515-52-TG2	EA	MOLDING - TRIM/VEE - 1.5" X 73.9" - WASHED MAPLE
8B	M09515-52-TG3	EA	MOLDING - TRIM/VEE - 1.5" X 73.9" - HONEY CHERRY
9B	Y00074-72-438	EA	MOLDING/CROWN - VINYL WRAPPED - PORTSMOUTH OAK - 96" - PORTSMOUTH OAK
9B	Y00074-62-438	EA	MOLDING/CROWN - VINYL WRAPPED - CONCERT CHERRY - 96" - CONCERT CHERRY
9B	Y00074-A2-438	EA	MOLDING/CROWN - VINYL WRAPPED - MAPLE - 96" - WASHED MAPLE
9B	Y00074-92-438	EA	MOLDING/CROWN - VINYL WRAPPED - SIERRA MAPLE - 96" - SIERRA MAPLE
10B	Y00076-42-438	EA	MOLDING/TRIM - .5" X 1" X 96" - OAK (UNSTAINED)
10B	Y00076-32-438	EA	MOLDING/TRIM - .5" X 1" X 96" - CHERRY (UNSTAINED)
10B	Y00076-22-438	EA	MOLDING/TRIM - .5" X 1" X 96" - MAPLE (UNSTAINED)

COPYRIGHT © 2007 WINNEBAGO INDUSTRIES INC.

INTERIOR FINISH GROUP (CONTINUED)

MOLDINGS & TRIMS (CONTINUED)

KEY	PART NUMBER	U/M	DESCRIPTION
11B	Y00086-72-438	EA	MOLDING - VINYL WRAP - .7" X 1.6" X 96" - PORTSMOUTH OAK - PORTSMOUTH OAK
11B	Y00086-62-438	EA	MOLDING - VINYL WRAP - .7" X 1.6" X 96" - CHERRY - CONCERT CHERRY
11B	Y00086-A2-438	EA	MOLDING - VINYL WRAP - .7" X 1.6" X 96" - WASHED MAPLE
11B	Y00086-82-438	EA	MOLDING - VINYL WRAP - .7" X 1.6" X 96" - HONEY CHERRY - HONEY CHERRY
11B	Y00086-92-438	EA	MOLDING - VINYL WRAP - .7" X 1.6" X 96" - SIERRA MAPLE - SIERRA MAPLE
11B	Y00087-72-438	EA	MOLDING - VINYL WRAP - .7" X 2.9" X 96" - PORTSMOUTH OAK
11B	Y00087-62-438	EA	MOLDING - VINYL WRAP - .7" X 2.9" X 96" - CONCERT CHERRY
11B	Y00087-A2-438	EA	MOLDING - VINYL WRAP - .7" X 2.9" X 96" - WASHED MAPLE
11B	Y00087-82-438	EA	MOLDING - VINYL WRAP - .7" X 2.9" X 96" - HONEY CHERRY
11B	Y00087-92-438	EA	MOLDING - VINYL WRAP - .7" X 2.9" X 96" - SIERRA MAPLE
11B	Y00267-72-438	EA	MOLDING - VINYL WRAP/MITERED - .6" X 96" - PORTSMOUTH OAK
11B	Y00267-62-438	EA	MOLDING - VINYL WRAP/MITERED - .6" X 96" - CONCERT CHERRY
11B	Y00267-A2-438	EA	MOLDING - VINYL WRAP/MITERED - .6" X 96" - WASHED MAPLE
11B	Y00267-92-438	EA	MOLDING - VINYL WRAP/MITERED - .6" X 96" - SIERRA MAPLE
11B	Y00300-72-438	EA	MOLDING - VINYL WRAP - .3" X .6" X 96" - PORTSMOUTH OAK
11B	Y00300-62-438	EA	MOLDING - VINYL WRAP - .3" X .6" X 96" - CONCERT CHERRY
11B	Y00300-A2-438	EA	MOLDING - VINYL WRAP - .3" X .6" X 96" - WASHED MAPLE
11B	Y00300-92-438	EA	MOLDING - VINYL WRAP - .3" X .6" X 96" - SIERRA MAPLE

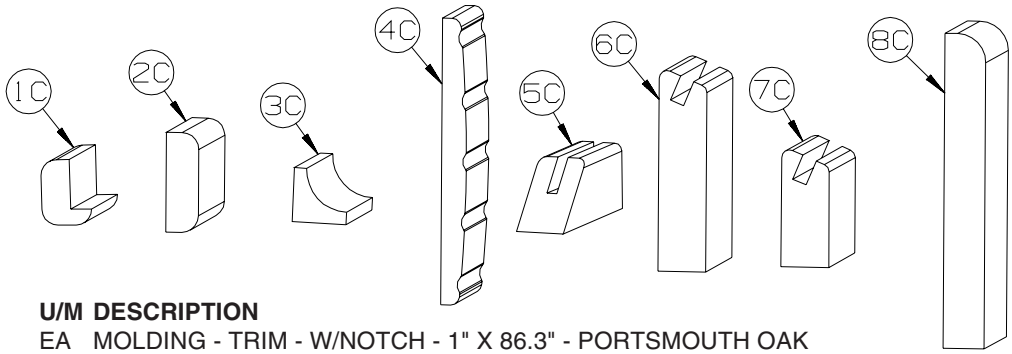

KEY	PART NUMBER	U/M	DESCRIPTION
1C	M09520-19-TD0	EA	MOLDING - TRIM - W/NOTCH - 1" X 86.3" - PORTSMOUTH OAK
1C	M09520-19-TD1	EA	MOLDING - TRIM - W/NOTCH - 1" X 86.3" - CONCERT CHERRY
1C	M09520-19-TD2	EA	MOLDING - TRIM - W/NOTCH - 1" X 86.3" - WASHED MAPLE
1C	M09520-19-TD3	EA	MOLDING - TRIM - W/NOTCH - 1" X 86.3" - HONEY CHERRY
1C	M09525-27-UF1	EA	MOLDING - HARDWOOD - .75" X 1.4" X 32.4" - CONCERT CHERRY
1C	M09525-27-UF2	EA	MOLDING - HARDWOOD - .75" X 1.4" X 32.4" - WASHED MAPLE
1C	M09525-27-UF3	EA	MOLDING - HARDWOOD - .75" X 1.4" X 32.4" - SIERRA MAPLE
2C	M09511-46-T77	EA	MOLDING/TRIM - .5" X 1.5" X 86.5" - PORTSMOUTH OAK
2C	M09511-46-T78	EA	MOLDING/TRIM - .5" X 1.5" X 86.5" - CONCERT CHERRY
2C	M09511-46-T79	EA	MOLDING/TRIM - .5" X 1.5" X 86.5" - WASHED MAPLE
2C	M09511-46-T80	EA	MOLDING/TRIM - .5" X 1.5" X 86.5" - SIERRA MAPLE
3C	M09471-79-R38	EA	MOLDING - TRIM/COVE - .8" X .8" X 96" - PORTSMOUTH OAK
3C	M09471-79-R39	EA	MOLDING - TRIM/COVE - .8" X .8" X 96" - CONCERT CHERRY
3C	M09471-79-R46	EA	MOLDING - TRIM/COVE - .8" X .8" X 96" - WASHED MAPLE
3C	M09471-79-RE0	EA	MOLDING - TRIM/COVE - .8" X .8" X 96" - HONEY CHERRY
3C	M09471-79-SA3	EA	MOLDING - TRIM/COVE - .8" X .8" X 96" - SIERRA MAPLE
4C	M09511-38-T89	EA	MOLDING - TRIM/FLUTED - 5" X 91.8" - PORTSMOUTH OAK
4C	M09511-38-T90	EA	MOLDING - TRIM/FLUTED - 5" X 91.8" - CONCERT CHERRY
4C	M09511-38-T91	EA	MOLDING - TRIM/FLUTED - 5" X 91.8" - WASHED MAPLE
4C	M09511-38-T92	EA	MOLDING - TRIM/FLUTED - 5" X 91.8" - SIERRA MAPLE
5C	Y00223-42-438	EA	MOLDING - HARDWOOD/OAK - .7" X 1" X 96"
5C	Y00223-32-438	EA	MOLDING - HARDWOOD/CHERRY - .7" X 1" X 96"
5C	Y00223-22-438	EA	MOLDING - HARDWOOD/MAPLE - .7" X 1" X 96"
6C	Y00258-72-438	EA	MOLDING/VINYL WRAP-BEVELED-.73" X 3.1" X 96" - PORTSMOUTH OAK
6C	Y00258-62-438	EA	MOLDING/VINYL WRAP-BEVELED-.73" X 3.1" X 96" - CONCERT CHERRY
6C	Y00258-A2-438	EA	MOLDING/VINYL WRAP-BEVELED ENDS-.73"X3.1"X96" - WASHED MAPLE
6C	Y00258-92-438	EA	MOLDING/VINYL WRAP-BEVELED-.73" X 3.1" X 96" - SIERRA MAPLE
7C	Y00259-72-438	EA	MOLDING/VINYL WRAP-BEVELED-.73" X 1.8" X 96" - PORTSMOUTH OAK
7C	Y00259-62-438	EA	MOLDING/VINYL WRAP-BEVELED-.73" X 1.8" X 96" - CONCERT CHERRY
7C	Y00259-A2-438	EA	MOLDING/VINYL WRAP-BEVELED-.73"X1.8"X96" - WASHED MAPLE
7C	Y00259-92-438	EA	MOLDING/VINYL WRAP-BEVELED-.73"X1.8"X96" - SIERRA MAPLE
8C	Y00331-72-438	EA	MOLDING/TRIM - VINYL - .7" X 5.5" X 96" - PORTSMOUTH OAK
8C	Y00331-62-438	EA	MOLDING/TRIM - VINYL - .7" X 5.5" X 96" - CONCERT CHERRY
8C	Y00331-A2-438	EA	MOLDING/TRIM - VINYL - .7" X 5.5" X 96" - WASHED MAPLE
8C	Y00331-92-438	EA	MOLDING/TRIM - VINYL - .7" X 5.5" X 96" - SIERRA MAPLE

COPYRIGHT © 2007 WINNEBAGO INDUSTRIES INC.

INTERIOR FINISH GROUP (CONTINUED)

MOLDINGS & TRIMS (CONTINUED)

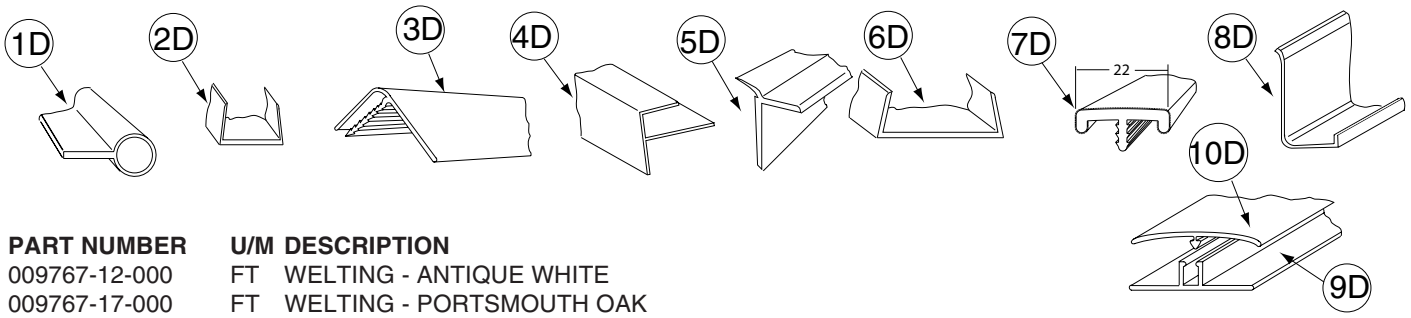

KEY	PART NUMBER	U/M	DESCRIPTION
1D	009767-12-000	FT	WELTING - ANTIQUE WHITE
1D	009767-17-000	FT	WELTING - PORTSMOUTH OAK
2D	009778-25-000	FT	U-CHANNEL - 1" - BEIGE ILLUSION
2D	009778-38-000	FT	U-CHANNEL - 1" - BONE
2D	009778-32-000	FT	U-CHANNEL - 1" - PORTSMOUTH OAK
2D	009778-34-000	FT	U-CHANNEL - 1" - CONCERT CHERRY
2D	009778-27-000	FT	U-CHANNEL - 1" - WASHED MAPLE
2D	009778-35-000	FT	U-CHANNEL - 1" - HONEY CHERRY
2D	009778-36-000	FT	U-CHANNEL - 1" - SIERRA MAPLE
3D	009809-30-000	EA	MOLDING - CORNER - OUTSIDE - 1" X 84" - BEIGE ILLUSION
3D	009809-37-000	EA	MOLDING - CORNER - OUTSIDE - 1" X 84" - BONE
3D	009809-32-000	EA	MOLDING - CORNER - OUTSIDE - 1" X 84" - PORTSMOUTH OAK
3D	009809-33-000	EA	MOLDING - CORNER - OUTSIDE - 1" X 84" - CONCERT CHERRY
3D	009809-31-000	EA	MOLDING - CORNER - OUTSIDE - 1" X 84" - WASHED MAPLE
3D	009809-34-000	EA	MOLDING - CORNER - OUTSIDE - 1" X 84" - HONEY CHERRY
3D	009809-35-000	EA	MOLDING - CORNER - OUTSIDE - 1" X 84" - SIERRA MAPLE
4D	009812-31-000	EA	MOLDING - CORNER - 1/2" W/1/4"CHAN X 84" - BEIGE ILLUSION
4D	009812-40-000	EA	MOLDING - CORNER - 1/2" W/1/4"CHAN X 84" - BONE
4D	009812-35-000	EA	MOLDING - CORNER - 1/2" W/1/4"CHAN X 84" - PORTSMOUTH OAK
4D	009812-36-000	EA	MOLDING - CORNER - 1/2" W/1/4"CHAN X 84" - CONCERT CHERRY
4D	009812-33-000	EA	MOLDING - CORNER - 1/2" W/1/4"CHAN X 84" - WASHED MAPLE
4D	009812-37-000	EA	MOLDING - CORNER - 1/2" W/1/4"CHAN X 84" - HONEY CHERRY
4D	009812-38-000	EA	MOLDING - CORNER - 1/2" W/1/4"CHAN X 84" - SIERRA MAPLE
5D	022992-11-000	FT	MOLDING - REVERSE COVE - T-SHAPED - IVORY
5D	022992-18-000	FT	MOLDING - REVERSE COVE - T-SHAPED - BONE
5D	022992-14-000	FT	MOLDING - REVERSE COVE - T-SHAPED - BRIGHT WHITE
6D	070504-42-000	FT	U-CHANNEL - PLASTIC - .13" X 84" - BEIGE ILLUSION
6D	070504-69-000	FT	U-CHANNEL - PLASTIC - .13" X 84" - BONE
6D	070504-43-000	FT	U-CHANNEL - PLASTIC - .9" X 96" - BEIGE ILLUSION
6D	070504-70-000	FT	U-CHANNEL - PLASTIC - .8" X 84" - BONE
6D	070504-57-000	FT	U-CHANNEL - PLASTIC - .13" X 84" - PORTSMOUTH OAK
6D	070504-58-000	FT	U-CHANNEL - PLASTIC - .9" X 84" - PORTSMOUTH OAK
6D	070504-60-000	FT	U-CHANNEL - PLASTIC - .13" X 84" - CONCERT CHERRY
6D	070504-61-000	FT	U-CHANNEL - PLASTIC - .9" X 84" - CONCERT CHERRY
6D	070504-50-000	FT	U-CHANNEL - PLASTIC - .13" X 96" - WASHED MAPLE
6D	070504-51-000	FT	U-CHANNEL - PLASTIC - .9" X 96" - WASHED MAPLE
6D	070504-62-000	FT	U-CHANNEL - PLASTIC - 1.65" X 84" - HONEY CHERRY
6D	070504-63-000	FT	U-CHANNEL - PLASTIC - .9" X 84" - HONEY CHERRY
6D	070504-65-000	FT	U-CHANNEL - PLASTIC - 1.65" X 84" - SIERRA MAPLE
6D	070504-66-000	FT	U-CHANNEL - PLASTIC - .9" X 84" - SIERRA MAPLE
7D	083620-15-000	FT	MOLDING-T - W/EDGE LIP - 7/8" FACE - BEIGE ILLUSION
7D	083620-25-000	FT	MOLDING-T - W/EDGE LIP - 7/8" FACE - BONE
7D	083620-20-000	FT	MOLDING-T - W/EDGE LIP - 7/8" FACE - PORTSMOUTH OAK
7D	083620-21-000	FT	MOLDING-T - W/EDGE LIP - 7/8" FACE - CONCERT CHERRY/HONEY CHERRY
7D	083620-19-000	FT	MOLDING-T - W/EDGE LIP - 7/8" FACE - WASHED MAPLE
7D	083620-22-000	FT	MOLDING-T - W/EDGE LIP - 7/8" FACE - SIERRA MAPLE
8D	085746-04-000	FT	TRIM-J - CARPET 1.2" X .5" ANGLE - 12' LONG - OFF WHITE
9D	086229-01-000	EA	RETAINER - BATTEN - .75" X 92.1" - ANY COLOR
10D	086229-20-000	EA	BATTEN - 1" X 96" - BEIGE

COPYRIGHT © 2007 WINNEBAGO INDUSTRIES INC.

INTERIOR FINISH GROUP (CONTINUED)

MOLDINGS & TRIMS (CONTINUED)

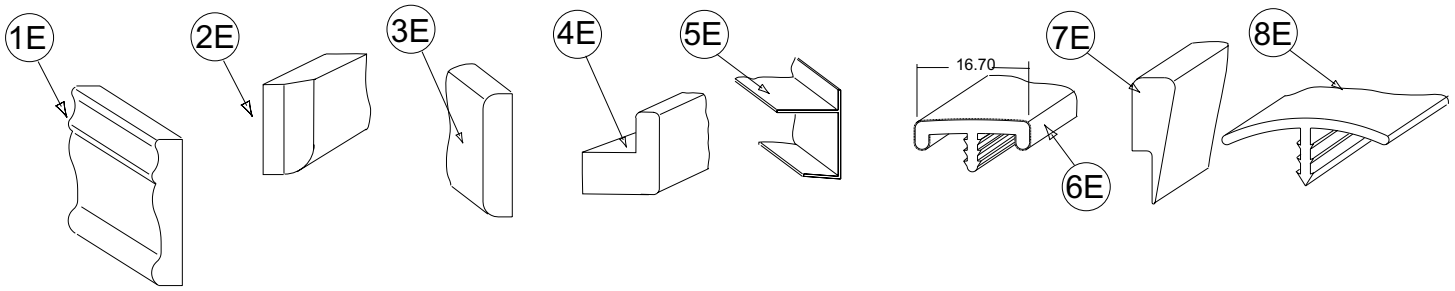

KEY	PART NUMBER	U/M	DESCRIPTION
1E	100182-10-N47	EA	TRIM/WOOD - CHAIR RAIL - 2.5" X 8' - PORTSMOUTH OAK
1E	100182-10-P85	EA	TRIM/WOOD - CHAIR RAIL - 2.5" X 8' - CONCERT CHERRY
1E	100182-10-J70	EA	TRIM/WOOD - CHAIR RAIL - 2.5" X 8' - WASHED MAPLE
1E	100182-10-RA3	EA	TRIM/WOOD - CHAIR RAIL - 2.5" X 8' - HONEY CHERRY
1E	100182-10-S67	EA	TRIM/WOOD - CHAIR RAIL - 2.5" X 8' - SIERRA MAPLE
2E	100659-30-N75	EA	MOLDING - TRIM - 8' - PORTSMOUTH OAK
2E	100659-30-N74	EA	MOLDING - TRIM - 8' - CONCERT CHERRY
2E	100659-30-M84	EA	MOLDING - TRIM - 8' - WASHED MAPLE
2E	100659-27-RA3	EA	MOLDING - TRIM - HONEY CHERRY
2E	100659-31-SA3	EA	MOLDING - TRIM - SIERRA MAPLE
3E	100818-01-12A	EA	MOLDING - VINYL WRAPPED - 1.6" X .4" X 84" - PORTSMOUTH OAK
3E	100818-01-13A	EA	MOLDING - VINYL WRAPPED - 1.6" X .4" X 84" - CONCERT CHERRY
3E	100818-01-21A	EA	MOLDING - VINYL WRAPPED - 1.6" X .4" X 84" - WASHED MAPLE
3E	100818-01-14A	EA	MOLDING - VINYL WRAPPED - 1.6" X .4" X 84" - HONEY CHERRY
3E	100818-01-22A	EA	MOLDING - VINYL WRAPPED - 1.6" X .4" X 84" - SIERRA MAPLE
4E	100819-01-12A	EA	MOLDING - VINYL WRAPPED-L-SHAPED-1.5"X1.5"X84" - PORTSMOUTH OAK
4E	100819-01-13A	EA	MOLDING - VINYL WRAPPED-L-SHAPED-1.5"X1.5"X84" - CONCERT CHERRY
4E	100819-01-21A	EA	MOLDING - VINYL WRAPPED-L-SHAPED-1.5"X1.5"X84" - WASHED MAPLE
4E	100819-01-14A	EA	MOLDING - VINYL WRAPPED-L-SHAPED-1.5"X1.5"X84" - HONEY CHERRY
4E	100819-01-22A	EA	MOLDING - VINYL WRAPPED-L-SHAPED-1.5"X1.5"X84" - SIERRA MAPLE
5E	103186-01-07A	FT	MOLDING/PLASTIC - 3/8" U-CHANNEL-3/4" FACE -BEIGE ILLUSION
5E	103186-01-09A	FT	MOLDING/PLASTIC - 3/8" U-CHAN'L-3/4" FACE - PORTSMOUTH OAK
5E	103186-01-10A	FT	MOLDING/PLASTIC - 3/8" U-CHAN'L-3/4" FACE - CONCERT CHERRY
5E	103186-01-08A	FT	MOLDING/PLASTIC - 3/8" U-CHANNEL-3/4"FACE-WASHED MAPLE 8' - WASHED MAPLE
5E	103186-01-11A	FT	MOLDING/PLASTIC - 3/8" U-CHAN'L-3/4" FACE - HONEY CHERRY
5E	103186-01-12A	FT	MOLDING/PLASTIC - 3/8" U-CHAN'L-3/4" FACE - SIERRA MAPLE
5E	103186-02-07A	FT	MOLDING/PLASTIC-1" U-CHAN'L-1 3/8" FACE - BEIGE ILLUSION
5E	103186-02-09A	FT	MOLDING/PLASTIC - 1" U-CHAN'L-1 3/8" FACE - PORTSMOUTH OAK
5E	103186-02-10A	FT	MOLDING/PLASTIC - 1" U-CHAN'L-1 3/8" FACE - CONCERT CHERRY
5E	103186-02-08A	FT	MOLDING/PLASTIC - 1" U-CHANNEL-1 3/8"FACE - WASHED MAPLE
5E	103186-02-11A	FT	MOLDING/PLASTIC - 1" U-CHAN'L-1 3/8" FACE - HONEY CHERRY
5E	103186-02-12A	FT	MOLDING/PLASTIC - 1" U-CHAN'L-1 3/8" FACE - SIERRA MAPLE
6E	104676-02-08A	FT	MOLDING-T - W/EDGE LIP - 11/16" FACE - PORTSMOUTH OAK
6E	104676-02-09A	FT	MOLDING-T - W/EDGE LIP - 11/16" FACE - CONCERT CHERRY
6E	104676-02-06A	FT	MOLDING-T - W/EDGE LIP - 11/16" FACE - WASHED MAPLE
6E	104676-02-10A	FT	MOLDING-T - W/EDGE LIP - 11/16" FACE - HONEY CHERRY
6E	104676-02-12A	FT	MOLDING-T - W/EDGE LIP - 11/16" FACE - SIERRA MAPLE
6E	105004-01-12A	EA	MOLDING - VINYL WRAPPED - 1" X 96" - PORTSMOUTH OAK
6E	105004-01-13A	EA	MOLDING - VINYL WRAPPED 1" X 8' - CONCERT CHERRY
6E	105004-01-21A	EA	MOLDING - VINYL WRAPPED - 1" X 8' - WASHED MAPLE
6E	105004-01-22A	EA	MOLDING - VINYL WRAPPED - 1" X 8' - SIERRA MAPLE
8E	105709-02-000	FT	MOLDING-T - W/EDGE LIP 3/4" FACE - BEIGE ILLUSION

COPYRIGHT © 2007 WINNEBAGO INDUSTRIES INC.

INTERIOR FINISH GROUP (CONTINUED)

MOLDINGS & TRIMS (CONTINUED)

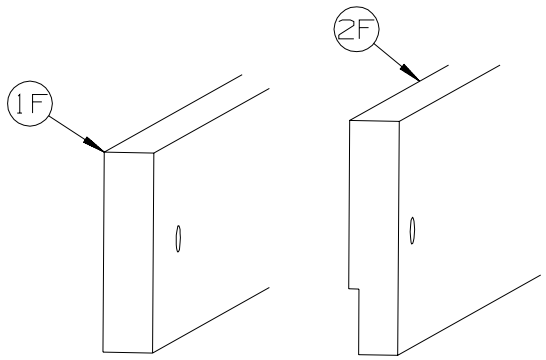

KEY	PART NUMBER	U/M	DESCRIPTION
1F	116951-45-R68	EA	MOLDING - TRIM - 3" X 30.3" - PORTSMOUTH OAK
1F	116951-45-R69	EA	MOLDING - TRIM - 3" X 30.3" - CONCERT CHERRY
1F	116951-45-R76	EA	MOLDING - TRIM - 3" X 30.3" - WASHED MAPLE
1F	116951-45-SA3	EA	MOLDING - TRIM - 3" X 30.3" - SIERRA MAPLE
2F	116951-37-R68	EA	MOLDING - TRIM - 3.5" X 38.6" - PORTSMOUTH OAK
2F	116951-37-R69	EA	MOLDING - TRIM - 3.5" X 38.6" - CONCERT CHERRY
2F	116951-37-R76	EA	MOLDING - TRIM - 3.5" X 38.6" - WASHED MAPLE
2F	116951-37-SA3	EA	MOLDING - TRIM - 3.5" X 38.6" - SIERRA MAPLE
2F	116951-51-SA0	EA	MOLDING - TRIM - 3.5" X 47.3" - PORTSMOUTH OAK
2F	116951-51-SA1	EA	MOLDING - TRIM - 3.5" X 47.3" - CONCERT CHERRY
2F	116951-51-SA2	EA	MOLDING - TRIM - 3.5" X 47.3" - WASHED MAPLE
2F	116951-51-SA3	EA	MOLDING - TRIM - 3.5" X 47.3" - SIERRA MAPLE
2F	116951-55-TD0	EA	MOLDING - TRIM - 4.5" X 52.3" - PORTSMOUTH OAK
2F	116951-55-TD1	EA	MOLDING - TRIM - 4.5" X 52.3" - CONCERT CHERRY
2F	116951-55-TD2	EA	MOLDING - TRIM - 4.5" X 52.3" - WASHED MAPLE
2F	116951-55-TD3	EA	MOLDING - TRIM - 4.5" X 52.3" - SIERRA MAPLE
2F	116951-56-TD0	EA	MOLDING - TRIM - 4.5" X 52.3" - PORTSMOUTH OAK
2F	116951-56-TD1	EA	MOLDING - TRIM - 4.5" X 52.3" - CONCERT CHERRY
2F	116951-56-TD2	EA	MOLDING - TRIM - 4.5" X 52.3" - WASHED MAPLE
2F	116951-56-TD3	EA	MOLDING - TRIM - 4.5" X 52.3" - SIERRA MAPLE

COPYRIGHT © 2007 WINNEBAGO INDUSTRIES INC.

INTERIOR FINISH GROUP (CONTINUED)

MOLDINGS & TRIMS (CONTINUED)

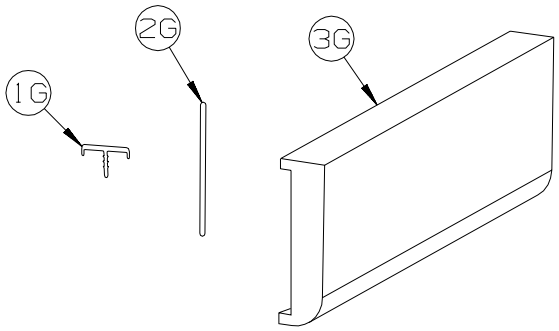

KEY	PART NUMBER	U/M	DESCRIPTION
1G	119520-01-01A	FT	MOLDING-T - OFFSET W/EDGE LIP - 1.3" FACE - OFF WHITE
1G	119520-01-04A	FT	MOLDING-T - OFFSET W/EDGE LIP - 1.3" FACE - PORTSMOUTH OAK
1G	119520-01-02A	FT	MOLDING-T - OFFSET W/EDGE LIP - 1.3" FACE - CONCERT CHERRY
1G	119520-01-03A	FT	MOLDING-T - OFFSET W/EDGE LIP - 1.3" FACE - WASHED MAPLE
1G	119520-01-05A	FT	MOLDING-T - OFFSET W/EDGE LIP - 1.3" FACE - SIERRA MAPLE
1G	119520-03-03A	FT	MOLDING-T - OFFSET W/EDGE LIP - 1" FACE - WASHED MAPLE
1G	119520-03-06A	FT	MOLDING-T - OFFSET W/EDGE LIP - 1" FACE - HONEY CHERRY
2G	127842-01-01A	FT	SEAL - SIGHT SHIELD - 2" BLACK
	137885-A2-438	EA	LUMBER - VINYL WRAPPED - .7" X .75" X 96" - CONCERT CHERRY
	137885-D2-438	EA	LUMBER - VINYL WRAPPED - .7" X 1.5" X 96" - CONCERT CHERRY
	137885-E2-438	EA	LUMBER - VINYL WRAPPED - .7" X 2" X 96" - CONCERT CHERRY
	137885-F2-438	EA	LUMBER - VINYL WRAPPED - .7" X 2.5" X 96" - CONCERT CHERRY
	137885-G2-438	EA	LUMBER - VINYL WRAPPED - .7" X 3" X 96" - CONCERT CHERRY
	137885-H2-438	EA	LUMBER - VINYL WRAPPED - .7" X 3.5" X 96" - CONCERT CHERRY
	137885-J2-438	EA	LUMBER - VINYL WRAPPED - .7" X 5.5" X 96" - CONCERT CHERRY
	137885-J2-743	EA	LUMBER - VINYL WRAPPED - .7" X 5.5" X 108" - CONCERT CHERRY
	137885-K2-438	EA	LUMBER - VINYL WRAPPED - .7" X 3.9" X 96" - CONCERT CHERRY
	137885-R2-438	EA	LUMBER - VINYL WRAPPED - .7" X 3" X 96" - CONCERT CHERRY
3G	137887-D2-134	EA	MOLDING - VINYL WRAPPED - .7" X 1.6" X 84" - CONCERT CHERRY
3G	137887-D2-743	EA	MOLDING - VINYL WRAPPED - .7" X 1.6" X 108" - CONCERT CHERRY
3G	137887-F2-134	EA	MOLDING - VINYL WRAPPED - .7" X 2.5" X 84" - CONCERT CHERRY
3G	137887-F2-743	EA	MOLDING - VINYL WRAPPED - .7" X 2.5" X 108" - CONCERT CHERRY
3G	137887-F2-438	EA	MOLDING - VINYL WRAPPED - .7" X 2.5" X 96" - CONCERT CHERRY
	137894-A2-438	EA	LUMBER - VINYL WRAPPED - .7" X .75" X 96" - PORTSMOUTH OAK
	137894-D2-438	EA	LUMBER - VINYL WRAPPED - .7" X 1.5" X 96" - PORTSMOUTH OAK
	137894-E2-438	EA	LUMBER - VINYL WRAPPED - .7" X 2" X 96" - PORTSMOUTH OAK
	137894-F2-438	EA	LUMBER - VINYL WRAPPED - .7" X 2.5" X 96" - PORTSMOUTH OAK
	137894-G2-438	EA	LUMBER - VINYL WRAPPED - .7" X 3" X 96" - PORTSMOUTH OAK
	137894-H2-438	EA	LUMBER - VINYL WRAPPED - .7" X 3.5" X 96" - PORTSMOUTH OAK
	137894-J2-438	EA	LUMBER - VINYL WRAPPED - .7" X 5.5" X 96" - PORTSMOUTH OAK
	137894-J2-743	EA	LUMBER - VINYL WRAPPED - .7" X 5.5" X 96" - PORTSMOUTH OAK
	137894-K2-438	EA	LUMBER - VINYL WRAPPED - .7" X 3.9" X 96" - PORTSMOUTH OAK
	137894-R2-438	EA	LUMBER - VINYL WRAPPED - .7" X 3" X 96" - PORTSMOUTH OAK
3G	137895-D2-134	EA	MOLDING - VINYL WRAPPED - .7" X 1.6" X 84"-PORTSMOUTH OAK
3G	137895-D2-743	EA	MOLDING - VINYL WRAPPED - .7" X 1.6" X 108"-PORTSMOUTH OAK
3G	137895-F2-438	EA	MOLDING - VINYL WRAPPED - .7" X 2.5" X 96" - PORTSMOUTH OAK
3G	137895-F2-743	EA	MOLDING - VINYL WRAPPED - .7" X 2.5" X 108" - PORTSMOUTH OAK
	146419-A2-438	EA	LUMBER - VINYL WRAPPED - .7" X .75" X 96" - HONEY CHERRY
	146419-D2-438	EA	LUMBER - VINYL WRAPPED - .7" X 1.5" X 96" - HONEY CHERRY
	146419-E2-438	EA	LUMBER - VINYL WRAPPED - .7" X 2" X 96" - HONEY CHERRY
	146419-F2-438	EA	LUMBER - VINYL WRAPPED - .7" X 2.5" X 96" - HONEY CHERRY
	146419-G2-438	EA	LUMBER - VINYL WRAPPED - .7" X 3" X 96" - HONEY CHERRY
	146419-H2-438	EA	LUMBER - VINYL WRAPPED - .7" X 3.5" X 96" - HONEY CHERRY
	146419-J2-438	EA	LUMBER - VINYL WRAPPED - .7" X 5.5" X 96" - HONEY CHERRY
	146419-J2-743	EA	LUMBER - VINYL WRAPPED - .7" X 5.5" X 108" - HONEY CHERRY
	146419-K2-438	EA	LUMBER - VINYL WRAPPED - .7" X 3.9" X 96" - HONEY CHERRY
	146419-R2-438	EA	LUMBER - VINYL WRAPPED - .7" X 3" X 96" - HONEY CHERRY
3G	146425-D2-134	EA	MOLDING - VINYL WRAPPED - .7" X 1.6" X 83.9" - HONEY CHERRY
3G	146425-F2-438	EA	MOLDING - VINYL WRAPPED - .7" X 2.6" X 96" - HONEY CHERRY

COPYRIGHT © 2007 WINNEBAGO INDUSTRIES INC.

INTERIOR FINISH GROUP (CONTINUED)

MOLDINGS & TRIMS (CONTINUED)

KEY	PART NUMBER	U/M	DESCRIPTION
	149325-A2-438	EA	LUMBER - VINYL WRAPPED - .7" X .75" X 96" - WASHED MAPLE
	149325-D2-438	EA	LUMBER - VINYL WRAPPED - .7" X 1.5" X 96" - WASHED MAPLE
	149325-E2-438	EA	LUMBER - VINYL WRAPPED - .7" X 2" X 96" - WASHED MAPLE
	149325-F2-438	EA	LUMBER - VINYL WRAPPED - .7" X 2.5" X 96" - WASHED MAPLE
	149325-G2-438	EA	LUMBER - VINYL WRAPPED - .7" X 3" X 96" - WASHED MAPLE
	149325-H2-438	EA	LUMBER - VINYL WRAPPED - .7" X 3.5" X 96" - WASHED MAPLE
	149325-J2-438	EA	LUMBER - VINYL WRAPPED - .7" X 5.5" X 96" - WASHED MAPLE
	149325-J2-743	EA	LUMBER - VINYL WRAPPED - .7" X 5.5" X 108" - WASHED MAPLE
	149325-K2-438	EA	LUMBER - VINYL WRAPPED - .7" X 3.9" X 96" - WASHED MAPLE
	149325-R2-438	EA	LUMBER - VINYL WRAPPED - .7" X 3" X 96" - WASHED MAPLE
3G	149326-D2-134	EA	MOLDING - VINYL WRAPPED - .7" X 1.5" X 83.9" - WASHED MAPLE
3G	149326-D2-743	EA	MOLDING - VINYL WRAPPED - .7" X 1.5" X 108" - WASHED MAPLE
3G	149326-F2-134	EA	MOLDING - VINYL WRAPPED - .7" X 2.5" X 83.9" - WASHED MAPLE
3G	149326-F2-438	EA	MOLDING - VINYL WRAPPED - .7" X 2.5" X 96" - WASHED MAPLE
3G	149326-F2-743	EA	MOLDING - VINYL WRAPPED - .7" X 2.5" X 108" - WASHED MAPLE
	149330-A2-438	EA	LUMBER - VINYL WRAPPED - .7" X .75" X 96" - SIERRA MAPLE
	149330-D2-438	EA	LUMBER - VINYL WRAPPED - .7" X 1.5" X 96" - SIERRA MAPLE
	149330-E2-438	EA	LUMBER - VINYL WRAPPED - .7" X 2" X 96" - SIERRA MAPLE
	149330-F2-438	EA	LUMBER - VINYL WRAPPED - .7" X 2.5" X 96" - SIERRA MAPLE
	149330-G2-438	EA	LUMBER - VINYL WRAPPED - .7" X 3" X 96" - SIERRA MAPLE
	149330-H2-438	EA	LUMBER - VINYL WRAPPED - .7" X 3.5" X 96" - SIERRA MAPLE
	149330-J2-438	EA	LUMBER - VINYL WRAPPED - .7" X 5.5" X 96" - SIERRA MAPLE
	149330-J2-743	EA	LUMBER - VINYL WRAPPED - .7" X 5.5" X 108" - SIERRA MAPLE
	149330-K2-438	EA	LUMBER - VINYL WRAPPED - .7" X 3.9" X 96" - SIERRA MAPLE
	149330-R2-438	EA	LUMBER - VINYL WRAPPED - .7" X 3" X 96" - SIERRA MAPLE
3G	149331-D2-134	EA	MOLDING - VINYL WRAPPED - .7" X 1.5" X 83.9" - SIERRA MAPLE
3G	149331-D2-743	EA	MOLDING - VINYL WRAP - .7" X 1.5" X 108" - SIERRA MAPLE
3G	149331-F2-134	EA	MOLDING - VINYL WRAPPED - .7" X 2.5" X 83.9" - SIERRA MAPLE
3G	149331-F2-438	EA	MOLDING - VINYL WRAPPED - .7" X 2.5" X 96" - SIERRA MAPLE
3G	149331-F2-743	EA	MOLDING - VINYL WRAPPED - .7" X 2.5" X 108" - SIERRA MAPLE

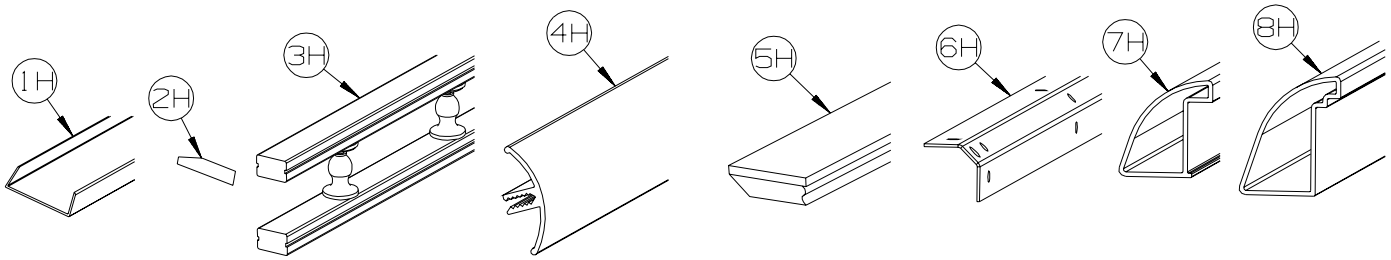

KEY	PART NUMBER	U/M	DESCRIPTION
1H	141260-01-01A	FT	U-CHANNEL - 1" - VILLAGE OAK - PORTSMOUTH OAK/WASHED MAPLE/SIERRA MAPLE
1H	141260-01-02A	FT	U-CHANNEL - 1" - GRADY BROWN - CONCERT CHERRY/HONEY CHERRY
1H	141260-02-01A	FT	U-CHANNEL - 1 1/8" - VILLAGE OAK - PORTSMOUTH OAK/WASHED MAPLE/SIERRA MAPLE
1H	141260-02-02A	FT	U-CHANNEL - 1 1/8" - GRADY BROWN - CONCERT CHERRY/HONEY CHERRY
2H	146306-01-01A	FT	TRANSITION - CARPET/TILE
3H	150167-01-07A	EA	RAIL - DECORATIVE - 96" W/O REVERSE SIDE GROOVE - PORTSMOUTH OAK
3H	150167-01-02A	EA	RAIL - DECORATIVE - 96" W/O REVERSE SIDE GROOVE - SALEM CHERRY - CONCERT CHERRY
3H	150167-01-03A	EA	RAIL - DECORATIVE - 96" W/O REVERSE SIDE GROOVE - WASHED MAPLE
3H	150167-01-09A	EA	RAIL - DECORATIVE - 96" W/O REVERSE SIDE GROOVE - SIERRA MAPLE
4H	151653-10-01A	EA	TRIM/RADIUS - CABINET CORNER - 79.6" - HAMMER TONE SILVER
4H	151653-10-02A	EA	TRIM/RADIUS - CABINET CORNER - 79.6" - DULL METALLIC
5H	151676-26-S46	EA	MOLDING/TRIM - .75" X 1.6" X 80.2" - PORTSMOUTH OAK
5H	151676-26-S47	EA	MOLDING/TRIM - .75" X 1.6" X 80.2" - CONCERT CHERRY
5H	151676-26-S48	EA	MOLDING/TRIM - .75" X 1.6" X 80.2" - WASHED MAPLE
5H	151676-26-SR0	EA	MOLDING/TRIM - .75" X 1.6" X 80.2" - SIERRA MAPLE
6H	151861-05-02B	EA	ANGLE - SUPPORT/CORNER - 1.4" X 78.6" - E-COATED
7H	151893-01-01A	EA	TRIM/RADIUS - CABINET BOTTOM - 72.6" - HAMMER TONE SILVER
7H	151893-01-02A	EA	TRIM/RADIUS - CABINET BOTTOM - 72.6" - DULL METALLIC
8H	152077-01-01A	EA	TRIM/RADIUS - CABINET BOTTOM - 27.7" - HAMMER TONE SILVER
8H	152077-01-02A	EA	TRIM/RADIUS - CABINET BOTTOM - 27.7" - DULL METALLIC

COPYRIGHT © 2007 WINNEBAGO INDUSTRIES INC.

INTERIOR FINISH GROUP (CONTINUED)

PANELING & LAMINATES

KEY	PART NUMBER	U/M	DESCRIPTION
	088272-K6-000	SF	PANELING - CYPRESS - 4' X 7' (T53, TL0)
	088272-L7-000	SF	PANELING - TAYLOR/MINK - 4' X 7.4' (T54, TL1) FROM: 00-00-00 THRU: 05-15-05
	088272-N0-000	SF	PANELING - VENICE PLASTER/MINK - 4' X 7.4' (T54, TL1) FROM: 05-16-05 THRU: 03-21-06
	088272-L0-000	SF	PANELING - D'VINCI ALMOND - 1/8" X 4' X 7' (T54, TL1) FROM: 03-22-06 THRU: 99-99-99
	088272-K7-000	SF	PANELING - STONE - 4' X 7' (T55, TL2)
	088272-L9-000	SF	PNLG - FRNCSCO/FRN - 4' X 7' (TT0, TT1, TT2, TT3, TT4, TT5, TT6, TT7, TT8, TT9, TU0, TU1, TU2, TU3)
	074497-42-000	SF	PANELING - PORTSMOUTH OAK - 1/8" X 4' X 8'
	074497-48-000	SF	PANELING - SIERRA MAPLE - 1/8" X 4' X 8'
	076773-15-000	SF	PANELING - 2 SIDED/PORTSMOUTH OAK - 1/8" X 4' X 8'
	076773-19-000	SF	PANELING - 2 SIDED/SIERRA MAPLE - 1/8" X 4' X 8'
	088272-H9-000	SF	PANELING - PEBBLE EMBOSSED - WHITE - 4' X 7' FROM: 00-00-00 THRU: 05-15-05
	088272-M9-000	SF	PANELING - WHITE THATCHED - 4' X 8' FROM: 05-16-05 THRU: 99-99-99
	085284-H9-000	FT	BATT TAPE - ADHESIVE BACKED - DECORATIVE - CYPRESS (T53, TL0)
	085284-J2-000	FT	BATT TAPE - ADHESIVE BACKED - DECORATIVE - TAYLOR MINK (T54, TL1) FROM: 00-00-00 THRU: 05-15-05
	085284-L0-000	FT	BATT TAPE - ADHESIVE BACKED - DECORATIVE - VENICE PLASTER/MINK (T54, TL1) FROM: 05-16-05 THRU: 03-21-06
	085284-J3-000	FT	BATT TAPE - ADHESIVE BACKED - DECORATIVE - D'VINCI ALMOND (T54, TL1) FROM: 03-22-06 THRU: 99-99-99
	085284-H9-000	FT	BATT TAPE - ADHESIVE BACKED - DECORATIVE - CYPRESS (T55, TL2)
	085284-J0-000	FT	BATT TAPE - FRNCSC/FRN (TT0, TT1, TT2, TT3, TT4, TT5, TT6, TT7, TT8, TT9, TU0, TU1, TU2, TU3)
	085284-G8-000	FT	BATT TAPE - ADHESIVE BACKED - PORTSMOUTH OAK
	085284-J4-000	FT	BATT TAPE - ADHESIVE BACKED - SIERRA MAPLE
	085284-F9-000	FT	BATT TAPE - ADHESIVE BACKED - PEBBLE EMBOSSED FROM: 00-00-00 THRU: 05-15-05
	085284-F9-000	FT	BATT TAPE - ADHESIVE BACKED - DECORATIVE - WHITE THATCHED FROM: 05-16-05 THRU: 99-99-99
	088263-H5-000	FT	BATT STRIP - DECORATIVE - CYPRESS (T53, TL0)
	088262-H9-000	FT	BATT STRIP - DECORATIVE - TAYLOR MINK (T54, TL1) FROM: 00-00-00 THRU: 05-15-05
	088263-K6-000	FT	BATT STRIP - DECORATIVE - VENICE PLASTER/MINK (T54, TL1) FROM: 05-16-05 THRU: 03-21-06
	088263-J0-000	EA	BATT STRIP - DECORATIVE - D'VINCI ALMOND (T54, TL1) FROM: 03-22-06 THRU: 99-99-99
	088263-H6-000	FT	BATT STRIP - DECORATIVE - STONE (T55, TL2)
	088263-H7-000	FT	BATT STRIP - FRNCSC/FRN (TT0, TT1, TT2, TT3, TT4, TT5, TT6, TT7, TT8, TT9, TU0, TU1, TU2, TU3)
	069733-87-000	EA	BATT STRIP - WOODGRAINED/PORTSMOUTH OAK - 8'
	088263-J1-000	EA	BATT STRIP - WOODGRAINED/SIERRA MAPLE - 8'
	000885-A5-000	SF	PARTICLE BOARD - 3/8" X 4' X 8' - WHITE PEB EMB - 1 SIDED FROM: 00-00-00 THRU: 05-15-05
	000885-C3-000	SF	PARTICLE BOARD - 3/8" X 4' X 8' - WHITE THATCH EMB - 1 SIDED FROM: 05-16-05 THRU: 99-99-99
	000885-92-000	SF	PARTICLE BOARD - 3/8" X 4' X 8' - PORTSMOUTH OAK - 1 SIDED
	000885-B1-000	SF	PARTICLE BOARD - 3/8" X 4' X 8' - SIERRA MAPLE - 1 SIDED
	000885-93-000	SF	PARTICLE BOARD - 3/8" X 4' X 8' - PORTSMOUTH OAK - 2 SIDED
	000885-B0-000	SF	PARTICLE BOARD - 3/8" X 4' X 8' - SIERRA MAPLE - 2 SIDED
	000885-94-000	SF	PARTICLE BOARD - 1/2" X 4' X 8' - PORTSMOUTH OAK - 2 SIDED
	000885-B3-000	SF	PARTICLE BOARD - 1/2" X 4' X 8' - SIERRA MAPLE - 2 SIDED
	000885-95-000	SF	PARTICLE BOARD - 3/4" X 4' X 8' - PORTSMOUTH OAK - 2 SIDED
	000885-B2-000	SF	PARTICLE BOARD - 3/4" X 4' X 8' - SIERRA MAPLE - 2 SIDED
	126339-01-000	SF	BOARD - WHEAT - 60" X 72"
	057882-04-000	SF	TAMBOUR - 48" X 96" SHEET - UNFINISHED

COPYRIGHT © 2007 WINNEBAGO INDUSTRIES INC.

INTERIOR FINISH GROUP (CONTINUED)

PANELING & LAMINATES (CONTINUED)

KEY	PART NUMBER	U/M	DESCRIPTION
	074498-B4-000	SF	LAMINATE - PLASTIC - MYSTIQUE DAWN - 5' X 8' (T53, TL0)
	074498-A3-000	SF	LAMINATE - PLASTIC - BRONZE LEGACY - 5' X 8' (T54, TL1)
	074498-B5-000	SF	LAMINATE - PLASTIC - SOFT ROCK - 5' X 8' (T55, TL2)
	074498-A1-000	SF	LAMINATE - LINO FRIEZE-5' X 8' (TT0, TT1, TT2, TT3, TT4, TT5, TT6, TT7, TT8, TT9, TU0, TU1, TU2, TU3)
	074498-40-000	SF	LAMINATE - PLASTIC - OFF WHITE - 4' X 8'
	074498-95-000	SF	LAMINATE - PLASTIC - PORTSMOUTH OAK - 4' X 8'
	076325-39-000	FT	MOLDING - EDGEBAND - 1 5/16" X .030" - ALMOND
	076325-40-000	FT	MOLDING - EDGEBAND - .93" X .024" - ALMOND
	076325-78-000	FT	MOLDING - EDGEBAND - .93" X .024" - PORTSMOUTH OAK
	076325-83-000	FT	MOLDING - EDGEBAND - .93" X .024" - SIERRA MAPLE
	130247-01-04A	FT	MOLDING/PLASTIC - T/OFFSET - W/1.3" FACE - PORTSMOUTH OAK
	130247-01-06A	FT	MOLDING/PLASTIC - T/OFFSET - W/1.3" FACE - SIERRA MAPLE

COPYRIGHT © 2007 WINNEBAGO INDUSTRIES INC.

INTERIOR FINISH GROUP (CONTINUED)

INTERIOR TRIM LAYOUT

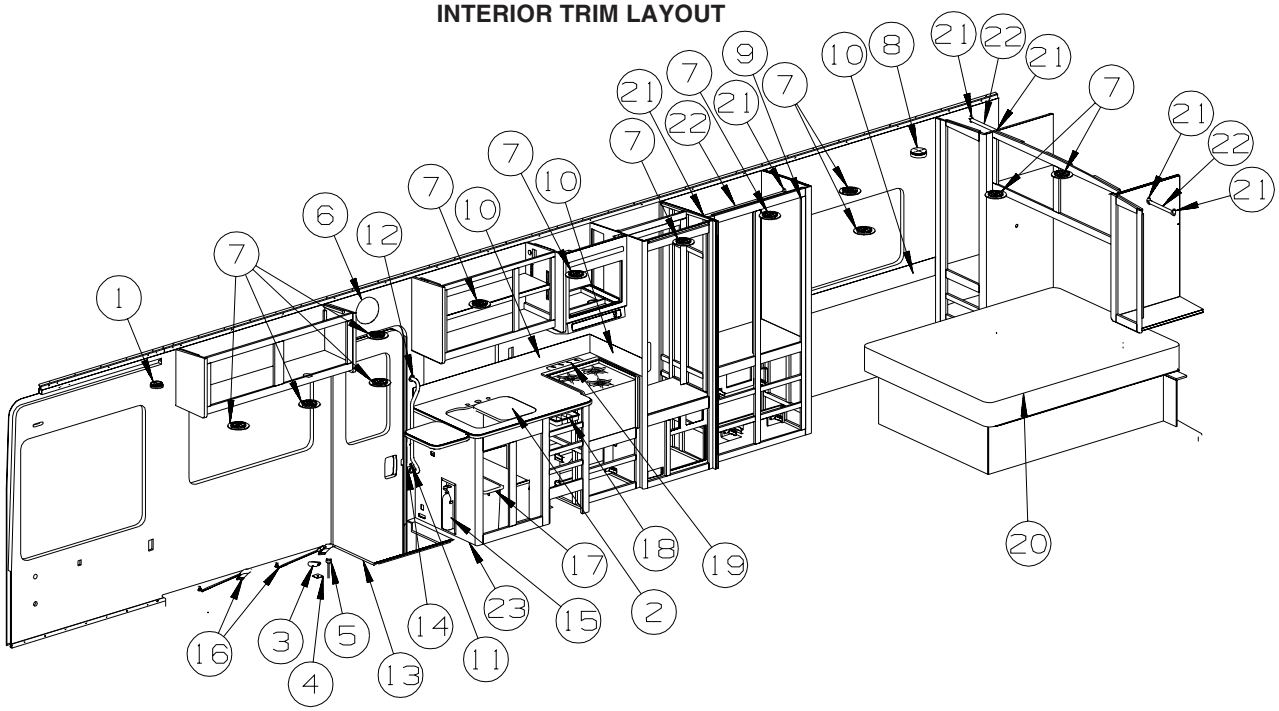

KEY	PART NUMBER	U/M	DESCRIPTION
1	072852-01-000	EA	DETECTOR - SMOKE - W/9 VOLT BATTERY - US
1	072852-02-000	EA	DETECTOR - SMOKE - W/9 VOLT BATTERY - CANADIAN
1	077956-01-000	EA	LABEL - WARNING/SMOKE DETECTOR
2	103610-04-T53	EA	COVER - SINK - 15.7" X 13.8" - LINO FRIEZE (T53, TL0)
2	103610-04-S34	EA	COVER - SINK - 15.7" X 13.8" - EGGSHELL MOSAIC (T54, TL1)
2	103610-04-T55	EA	COVER - SINK - 15.7" X 13.8" - GRAY TRANQUILITY (T55, TL2)
3	134057-01-11B	EA	BRACKET - RECLINER - FLAT BLACK
4	134128-02-02B	EA	PLATE - W/HOLES - W/WELDNUT - E-COATED
5	137598-01-01A	EA	KNOB - HOLD DOWN - RECLINER
6	142368-01-02A	EA	CLOCK - 8" ROUND - SATIN NICKEL
7	120134-01-02A	EA	REGISTER - W/DAMPER - 4" PIPE/6.4" O.D. FACE - WHITE
8	125136-02-000	EA	DETECTOR/CO - GAS MODEL - 9 VOLT
9*	131595-01-01A	EA	DOOR/FOLDING-36.9"X 74.9"-4 CEILING BRKTS & STRAIGHT TRACK
	057534-03-000	EA	TIEBACK - CLEAR PLASTIC - 7.5"
10	132610-05-39A	FT	WALLPAPER - BORDER - 7" - SELF-ADHESIVE (T53, TL0)
10	132610-05-32A	FT	WALLPAPER - BORDER - 7" - SELF-ADHESIVE (T54, TL1)
10	132610-05-27A	FT	WALLPAPER - BORDER - 7" - SELF-ADHESIVE (T55, TL2)
11	140151-02-02A	EA	COVER - SCREW - BRIGHT WHITE
12	137605-01-01A	EA	RAIL - HAND - INTERIOR ENTRY DOOR - BLACK
13	139955-06-02A	EA	TRIM - STEP/ENTRY - 29.3" - TITANIUM
14	148362-01-01A	EA	COVER - BRACKET/STRIKE - BRIGHT WHITE
15	094499-03-000	EA	EXTINGUISHER/FIRE - DRY - 10BC - W/GAUGE/BRACKET
15*	094499-02-000	EA	EXTINGUISHER/FIRE - DRY - 10BC - W/GAUGE - CANADIAN
15	094499-04-000	EA	STRAP - FIRE EXTINGUISHER MOUNTING - METAL
16	007021-01-000	EA	SEAT BELT - 2" X 90" - BLACK
17	130818-02-01A	EA	TRASH CONTAINER - 20 QUART ALMOND - GALLEY UPGRADE PACKAGE
18	100081-01-01A	EA	TRAY - SILVERWARE - 9" X 13.3" RUBBERMAID ALMOND PLASTIC - GALLEY UPGRADE PACKAGE
19	153433-01-T53	EA	HOLDER - KNIFE (T53, T54, T55) - GALLEY UPGRADE PACKAGE
19	153433-01-TL0	EA	HOLDER - KNIFE (TL0, TL1, TL2) - GALLEY UPGRADE PACKAGE
20	154430-01-000	EA	MATTRESS - INNERSPRING - 60" X 74.5"
21	Y00136-21-218	EA	DOWEL - WOOD - CLOTHES ROD - 1"DIAMETER X 4'
22	152301-01-01A	EA	FLANGE - PLASTIC - 1" CLOTHES ROD HOLDER - WHITE
23	M09471-79-R38	EA	MOLDING - TRIM/COVE - .8" X .8" X 96" - PORTSMOUTH OAK
23	M09471-79-SA3	EA	MOLDING - TRIM/COVE - .8" X .8" X 96" - SIERRA MAPLE

***COMPONENT PARTS LISTED LATER IN THIS GROUP**

COPYRIGHT © 2007 WINNEBAGO INDUSTRIES INC.

INTERIOR FINISH GROUP (CONTINUED)

INTERIOR TRIM LAYOUT (CONTINUED)

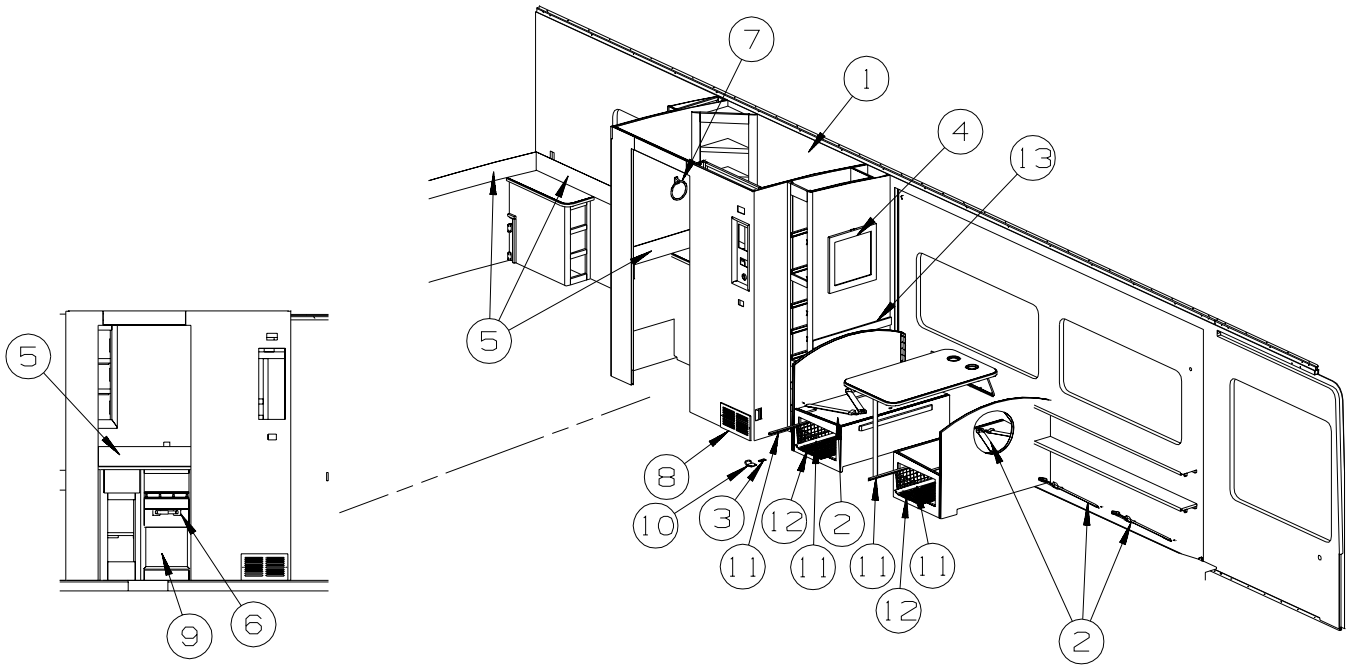

KEY	PART NUMBER	U/M	DESCRIPTION
1*	115011-03-02A	EA	DOOR SHOWER - SLIDING/BYPASS W/40" LOWER TRACK-CHROME/AQUA
2	007021-01-000	EA	SEAT BELT - 2" X 90" - BLACK
3	150700-01-02B	EA	PLATE/MOUNTING - RESTRAINT/CHILD - 1" X 2.3" - E-COATED
4	131493-02-36A	EA	PICTURE - DECORATIVE - 13" X 15" - BALSAM LEAF (T53, TL0)
4	131493-02-35A	EA	PICTURE - DECORATIVE - 13" X 15" - BOTANICAL (T54, TL1)
4	131493-08-02A	EA	PICTURE - DECORATIVE - 14" X 14" - POLYMONIUMS (T55, TL2)
5	132610-05-39A	FT	WALLPAPER - BORDER - 7" - SELF-ADHESIVE (T53, TL0)
5	132610-05-32A	FT	WALLPAPER - BORDER - 7" - SELF-ADHESIVE (T54, TL1)
5	132610-05-27A	FT	WALLPAPER - BORDER - 7" - SELF-ADHESIVE (T55, TL2)
6	145980-01-02A	EA	HOLDER - TOILET TISSUE - CHROME
7	145980-06-03A	EA	TOWEL RING - CHROME
8	093614-11-01A	EA	GRILLE - AIR RETURN - 13.9" X 7.9" - BEIGE
9	137602-10-R89	EA	POCKET - MAGAZINE RACK - W/RAIL (PEWTER) - PORTSMOUTH OAK
9	137602-10-S79	EA	POCKET - MAGAZINE RACK - W/RAIL (PEWTER) - SIERRA MAPLE
10	150697-02-02B	EA	BRACKET - RESTRAINT/CHILD - E-COATED
11	149728-01-01A	EA	BASKET/DRAWER - WHITE - 12.9"W X 20.7"D X 7.3"H - GALLEY UPGRADE PACKAGE
12	149728-02-01A	EA	RUNNER/RAIL - F/BASKET - 21"DEEP - GALLEY UPGRADE PACKAGE
13	100182-10-N47	EA	TRIM/WOOD - CHAIR RAIL - 2.5" X 8' - PORTSMOUTH OAK
13	100182-10-S67	EA	TRIM/WOOD - CHAIR RAIL - 2.5" X 8' - SIERRA MAPLE

***COMPONENT PARTS LISTED LATER IN THIS GROUP**

COPYRIGHT © 2007 WINNEBAGO INDUSTRIES INC.

INTERIOR FINISH GROUP (CONTINUED)

COMPONENT PARTS FOR INTERIOR TRIM LAYOUT

094499-02-000

KEY	PART NUMBER	U/M	DESCRIPTION	VENDOR NO
	094499-01-700	EA	BRACKET MTG. W/PLAS. STRAP	294039

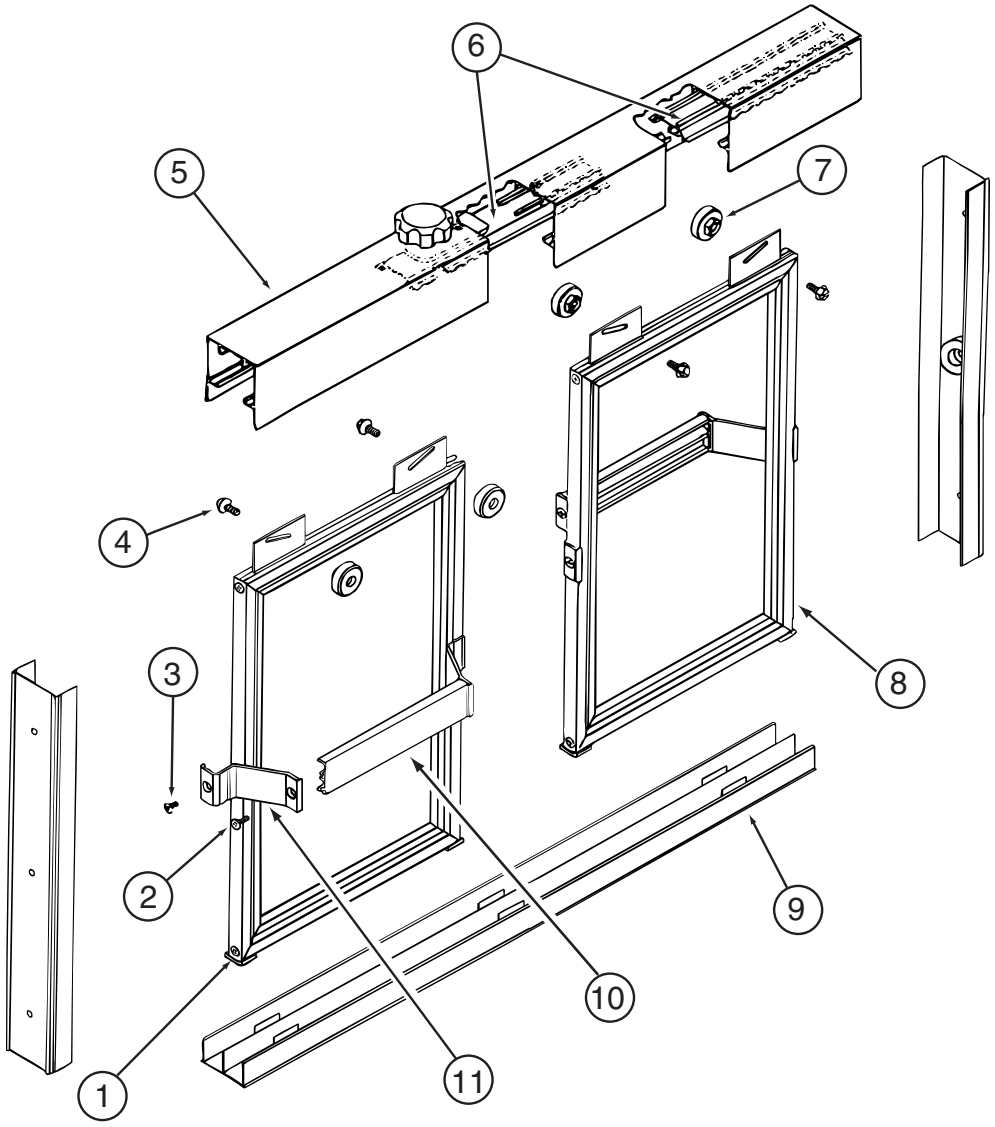

115011-03-02A

KEY	PART NUMBER	U/M	DESCRIPTION	VENDOR NO.
2	115011-03-700	EA	SCREW F/TOWEL BAR/HEADER	612F-B
3	115011-03-703	EA	SCREW F/TOWEL BAR BRKTS	638F-B CHROME
4	115011-01-705	EA	SCREW-ROLLER, (HEX HEAD)	832HEX
5	115011-03-705	EA	HEADER-W/O ANTI JUMP GUARD	120B - CHROME
6	115011-01-710	EA	HEADER(ANTI JUMP/LOCK)W/CLIP	130MIDDLE
6	115011-01-716	EA	GUARD-ANTI JUMP-W/O TENSION	130END
7	115011-01-704	EA	ROLLERS	PN193
8	115011-01-706	FT	GLAZING VINYL-BLACK	C169C
9	115011-03-704	EA	TRACK-BOTTOM- 50" CHROME	90B
10	115011-03-701	EA	BAR-TOWEL - SILVER	136B
11	115011-03-702	EA	BRACKET-TOWEL BAR - SILVER	135B
12	115011-03-706	EA	JAMB - WALL SHOWER DOOR	1268
	115011-01-711	EA	KNOB-TENSION,(HEADER W/BOLT)	1420K-1420S
	115011-01-714	EA	BUMPER - RATTLE/SHOWER DOOR	5168S
	115011-01-715	EA	PAD - FOAM	116R

CONTACT WINNEBAGO PART SALES FOR UNLISTED COMPONENT(S)

COPYRIGHT © 2007 WINNEBAGO INDUSTRIES INC.

INTERIOR FINISH GROUP (CONTINUED)

COMPONENT PARTS FOR INTERIOR TRIM LAYOUT (CONTINUED)

131595-01-01A, 131595-05-01A, 131595-10-01A

KEY	PART NUMBER	U/M	DESCRIPTION	VENDOR NO.
	117431-01-707	EA	CATCH/PIN - PLASTIC	
	131595-01-700	EA	END STOP ONLY	
	131595-01-701	EA	BRACKET/MOUNTING	908956
	131595-01-702	EA	TRACK/STRAIGHT - 37"	

FLOOR COVERINGS

KEY	PART NUMBER	U/M	DESCRIPTION
	152251-05-02A	SY	CARPET - 4 SQUARE YARD INCREMENTS - BURLWOOD (T53,TL0, TT6, TT7, TU0, TU1, TU2, TU3)
	096060-H1-000	SY	CARPET - TAPIOCA - INCREMENTS OF 4 SQ YARDS (T54,TL1) FROM: 00-00-00 THRU: 01-23-05
	152251-06-01A	SY	CARPET - 4 SQUARE YARD INCREMENTS - WHEAT (T54,TL1) FROM: 01-24-05 THRU: 99-99-99
	152251-05-05A	SY	CARPET - 4 SQUARE YARD INCREMENTS - SKY BLUE (T55,TL2) FROM: 00-00-00 THRU: 09-18-05
	152251-06-02A	SY	CARPET - 4 SQUARE YARD INCREMENTS - LAMBS WOOL (T55,TL2) FROM: 09-19-05 THRU: 99-99-99
	152251-05-03A	SY	CARPET - 4 SQUARE YARD INCREMENTS - CLOUD BURST (TT0, TT1, TT8, TT9)
	152251-05-04A	SY	CARPET - 4 SQUARE YARD INCREMENTS - BUTTERCUP (TT2, TT3)
	152251-05-01A	SY	CARPET - 4 SQUARE YARD INCREMENTS - SAGE (TT4, TT5)
	093486-01-000	SY	CARPET - COMPARTMENT - 72" WIDE - DARK GRAY
	075233-01-000	SY	PAD - CARPET - 3/8" X 6' ROLL
	042720-37-000	SY	VINYL - FLOOR COVERING - DIAMOND
	089275-02-000	FT	STRIP - 3/4" X 84" BLACK POLYETHYLENE

COPYRIGHT © 2007 WINNEBAGO INDUSTRIES INC.

INTERIOR FINISH GROUP (CONTINUED)

HARDWARE

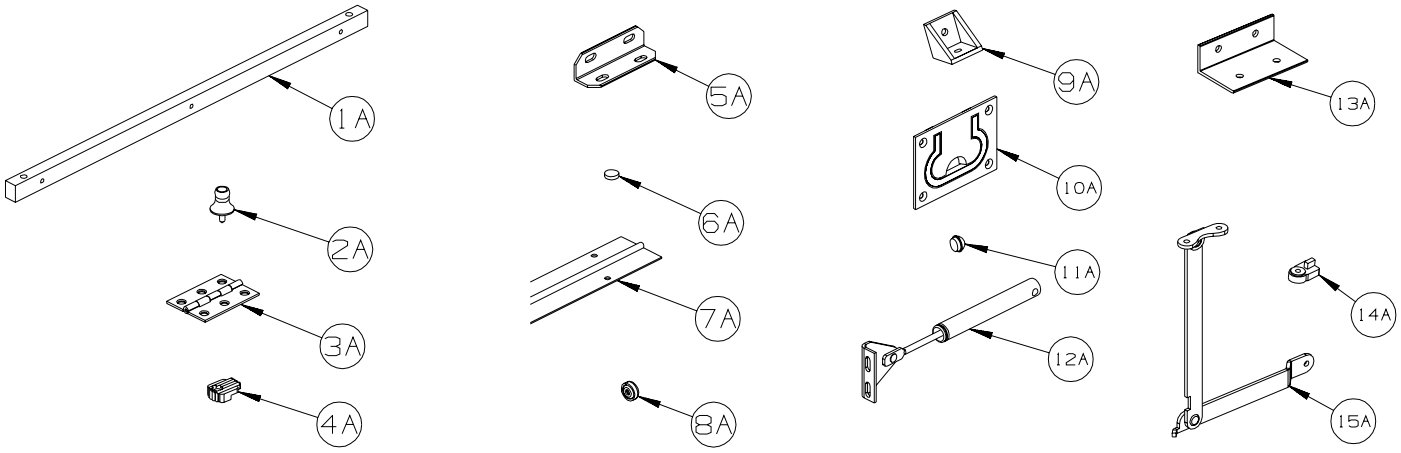

KEY	PART NUMBER	U/M	DESCRIPTION
1A	P34509-01-N01	EA	RAIL END - RH/LH - TOWEL RACK - PORTSMOUTH
1A	P34509-01-P14	EA	RAIL END - RH/LH - TOWEL RACK - CONCERT CHERRY
1A	P34509-01-J70	EA	RAIL END - RH/LH - TOWEL RACK - WASHED MAPLE
1A	P34509-01-RE0	EA	RAIL END - RH/LH - TOWEL RACK - HONEY CHERRY
1A	P34509-01-SA3	EA	RAIL END - RH/LH - TOWEL RACK - SIERRA MAPLE
2A	009013-01-000	EA	CATCH - BULLDOG - MALE/FEMALE
3A	009059-01-000	EA	HINGE - DOOR - 2" X 1.4" - BRASS
3A	009059-02-000	EA	HINGE - DOOR - 2" X 2.7" - BRASS
3A	009059-03-000	EA	HINGE - BRASS - 1.75"
3A	009059-04-000	EA	HINGE - 2” - ZINC
4A	009089-01-000	EA	CLIP - MIRROR
5A	016604-01-000	EA	BRACE - ANGLE - 2 1/2" - UNPAINTED METAL
5A	016604-05-000	EA	BRACE - ANGLE - 2 1/2" - OFF WHITE METAL
5A	016604-10-000	EA	BRACE - SEAT ANGLE - 2.5" - BLACK
6A	023320-01-000	EA	PAD - FELT 3/8" DIAMETER
7A	041389-19-000	EA	HINGE - PIANO - 1 1/2" X 71.9" - UNPAINTED
7A	041389-25-000	EA	HINGE - PIANO - 1 1/2" X 55" - UNPAINTED
7A	041389-32-000	EA	HINGE - PIANO - 68" - OFF WHITE
8A	057671-01-000	EA	COVER - SCREW - #8 - OFF WHITE
8A	057671-15-000	EA	COVER - SCREW - #8 - BRIGHT WHITE
8A	057671-16-000	EA	COVER - SCREW - #8 - SOFT WHITE
8A	057671-18-000	EA	COVER - SCREW - #8 - OFF WHITE
9A	065740-01-000	EA	BRACE - CABINET/CORNER - PLASTIC
10A	072871-01-000	EA	PULL - FLUSH - CHROME
11A	074045-13-000	EA	PLUG - OAK - 3/8" DOWEL-1/2" HEAD - PORTSMOUTH OAK
11A	074045-08-000	EA	PLUG - OAK - 3/8" DOWEL-1/2" HEAD - CONCERT CHERRY
11A	074045-12-000	EA	PLUG - OAK - 3/8" DOWEL-1/2" HEAD - WASHED MAPLE
11A	074045-14-000	EA	PLUG - OAK - 3/8" DOWEL-1/2" HEAD - HONEY CHERRY
11A	074045-15-000	EA	PLUG - OAK - 3/8" DOWEL-1/2" HEAD - SIERRA MAPLE
12A	074493-02-000	EA	SUPPORT - PISTON SPRING - CABINET DOOR - 26 LBS
12A	074493-03-000	EA	SUPPORT - PISTON SPRING - CABINET DOOR - 12 LBS
12A	074493-04-000	EA	SUPPORT - PISTON SPRING - CABINET DOOR - 32LBS
13A	083125-07-000	EA	BRACE - ANGLE/COUCH - 2.5" - OFF WHITE
13A	156732-01-02A	EA	BRACE - ANGLE/COUCH - 2.5" - OFF WHITE
14A	083204-03-000	EA	BUTTON - RETAINING MIRROR 5/16" TIP
15A	084412-01-000	EA	SUPPORT/HINGE KIT (LEFT & RIGHT HINGES)

COPYRIGHT © 2007 WINNEBAGO INDUSTRIES INC.

INTERIOR FINISH GROUP (CONTINUED)

HARDWARE (CONTINUED)

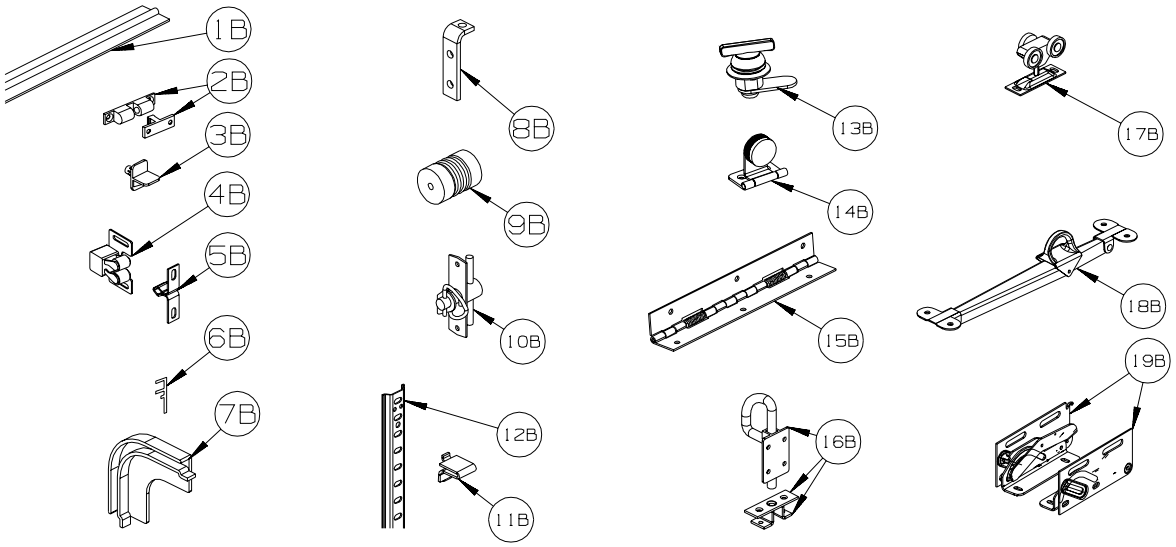

KEY	PART NUMBER	U/M	DESCRIPTION
1B	084413-01-000	EA	HINGE - 1" X 72" - ALUMINUM - W/HOLES
1B	134099-01-02A	EA	HINGE - PIANO - WRAP AROUND - 15.7" - NICKEL PLATED
2B	084451-01-000	EA	CATCH & LATCH - 1.7" - BRASS
3B	092907-01-000	EA	SUPPORT - SHELF - PIN - 1/4" - CLEAR PLASTIC
4B	093586-03-000	EA	CATCH - SPRING ROLLER - .377"
4B	093586-06-000	EA	CATCH - SPRING ROLLER - .236"
5B	093586-04-000	EA	STRIKE - SPRING STEEL - 1.14"
5B	093586-05-000	EA	STRIKE - SPRING STEEL - .943"
6B	093622-01-000	EA	TRACK - DOOR - TAMBOUR - PLASTIC - 8' LENGTHS
7B	093623-01-000	EA	CORNER - TRACK - TAMBOUR DOOR
8B	096826-01-01A	EA	BRACE-CABINET E-COATED
9B	097872-04-000	EA	DOWEL - WOOD - 1" DIAMETER X 1.38" LONG - UNFINISHED
10B	098196-01-000	EA	LATCH - 1/4 TURN - T-BAR
11B	098979-01-000	EA	CLIP - ADJUSTABLE SHELF
12B	098980-01-000	EA	PILASTER - ADJUSTABLE SHELF - 18"
12B	098980-02-000	EA	PILASTER - ADJUSTABLE SHELF - 12"
12B	098980-03-000	EA	PILASTER - ADJUSTABLE SHELF - 9"
12B	098980-04-000	EA	PILASTER - ADJUSTABLE SHELF - 48"
12B	098980-05-000	EA	PILASTER - ADJUSTABLE SHELF - 15"
12B	098980-06-000	EA	PILASTER - ADJUSTABLE SHELF - 24"
13B	100710-01-02A	EA	LOCK - GLASS DOOR/TWIST TYPE - NICKEL
14B	100711-01-02A	EA	HINGE - GLASS DOOR - NICKEL
15B	102920-01-01A	EA	HINGE - SPRING LOADED - BRASS
15B	102920-01-02A	EA	HINGE - SPRING LOADED - NICKEL
15B	129753-01-01A	EA	HINGE - SPRING LOADED - 19" X 19" - BLACK
16B	103256-01-000	EA	LATCH COMPLETE (SLIDE)
17B	103874-01-000	EA	HANGER - SLIDING DOOR
18B	104181-01-01A	EA	SUPPORT - LEAF 5.3" EXTENDS TO 7.5" - SAFETY RING - METAL
19B	108126-01-000	EA	TRAY HINGE SET (QTY. 2 PER SET)

COPYRIGHT © 2007 WINNEBAGO INDUSTRIES INC.

INTERIOR FINISH GROUP (CONTINUED)

HARDWARE (CONTINUED)

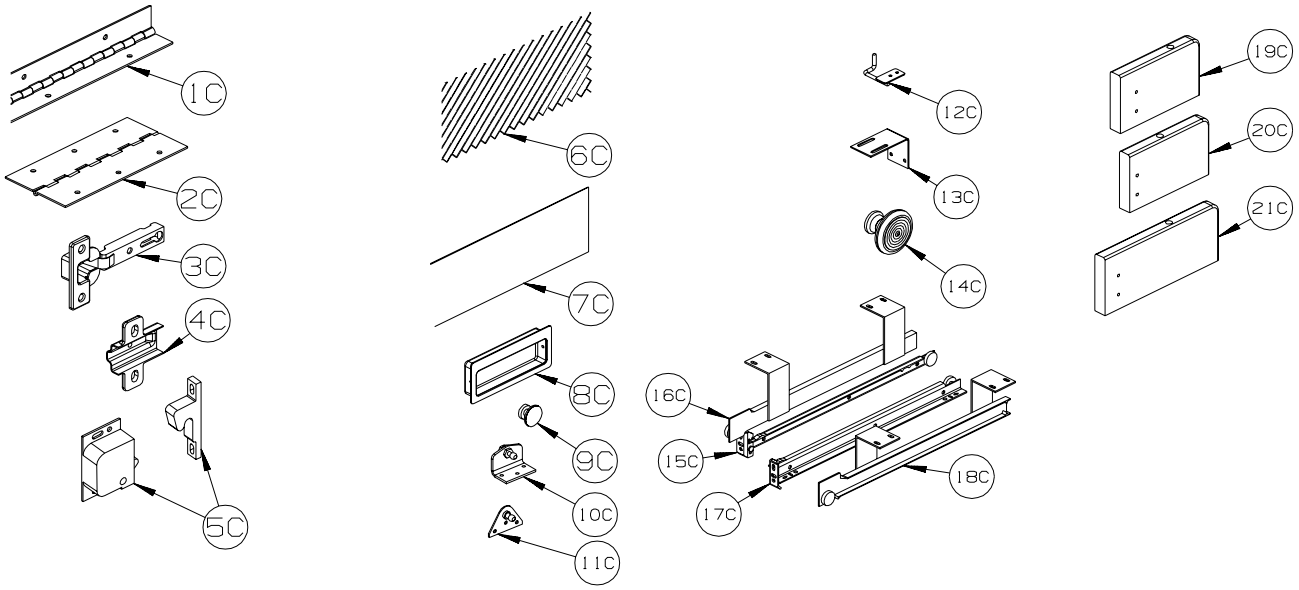

KEY	PART NUMBER	U/M	DESCRIPTION
1C	110496-01-01A	EA	HINGE - BRASS - 2” X 32”
1C	110496-01-02A	EA	HINGE - NICKEL - 2” X 32”
1C	110496-05-02A	EA	HINGE - NICKEL - 2" X 11.5"
2C	114278-02-000	EA	HINGE - CONTINUOUS - 3" WIDE
3C	114443-02-01A	EA	HINGE - CABINET DOOR - W/O CLIP - SILVER
4C	114443-03-01A	EA	CLIP - HINGE/CABINET DOOR - SILVER
5C	117095-01-01A	EA	LATCH - DOOR - GRABBER W/KEEPER - PLASTIC - BLK-5 LB PULL
5C	117095-02-01A	EA	LATCH - DOOR - GRABBER W/KEEPER - PLASTIC - BLK-10 LB PULL
5C	117095-03-01A	EA	LATCH - DOOR - GRABBER W/KEEPER - PLASTIC - BLK-15 LB PULL
6C	118200-01-01A	SF	MESH - PLASTIC 1/2" - 48" X LENGTH = SF - BLACK
7C	122717-06-01A	FT	PAD - NON-SKID - PSA - 5"W
8C	124311-01-01A	EA	HANDLE - RECESSED - BRASS
9C	125221-01-01A	EA	PULL - MIRROR - W/ROUND HANDLE
10C	126263-06-02B	EA	BRACKET - GAS SPRING W/INSIDE BALL STUD - E-COATED
	057460-02-000	EA	BALL STUD - F/GAS SPRING .39” - 5/16” -18
11C	126263-05-02B	EA	BRACKET - GAS SPRING W/BALL STUD - E-COATED
	057460-02-000	EA	BALL STUD - F/GAS SPRING .39” - 5/16” -18
11C	126263-08-02B	EA	BRACKET - GAS SPRING W/CENTERED BALL STUD - E-COATED
11C	126263-19-02B	EA	BRACKET - GAS SPRING W/BALL STUD - E-COATED
12C	130798-01-02B	EA	GUIDE - POCKET DOOR - E-COATED
13C	132871-02-02B	EA	BRACKET/L-ANGLE W/HOLES - 1.9" X 2.8" - E-COATED
14C	133313-01-03A	EA	PULL - DOOR/DWR - CHROME/BRASS - SPIRIT 300 SERIES, SUNDANCER AND SUNRISE
15C	136944-01-01A	EA	SLIDE - DRAWER/RIGHT HAND - 13.8"
16C	136944-02-01A	EA	SLIDE - CABINET/RIGHT HAND - 13.8"
17C	136944-03-01A	EA	SLIDE - DRAWER/LEFT HAND - 13.8"
18C	136944-04-01A	EA	SLIDE - CABINET/LEFT HAND - 13.8"
19C	137445-01-N42	EA	STOP - F/SLIDING DOOR - PORTSMOUTH OAK
19C	137445-01-P46	EA	STOP - F/SLIDING DOOR - CONCERT CHERRY
19C	137445-01-P56	EA	STOP - F/SLIDING DOOR - WASHED MAPLE
19C	137445-01-S67	EA	STOP - F/SLIDING DOOR - SIERRA MAPLE
20C	137445-02-P45	EA	STOP - F/SLIDING DOOR - PORTSMOUTH OAK
20C	137445-02-P46	EA	STOP - F/SLIDING DOOR - CONCERT CHERRY
20C	137445-02-P56	EA	STOP - F/SLIDING DOOR - WASHED MAPLE
20C	137445-02-S67	EA	STOP - F/SLIDING DOOR - SIERRA MAPLE
21C	137445-03-T77	EA	STOP - F/SLIDING DOOR - PORTSMOUTH OAK
21C	137445-03-T78	EA	STOP - F/SLIDING DOOR - CONCERT CHERRY
21C	137445-03-T79	EA	STOP - F/SLIDING DOOR - WASHED MAPLE
21C	137445-03-T80	EA	STOP - F/SLIDING DOOR - SIERRA MAPLE

COPYRIGHT © 2007 WINNEBAGO INDUSTRIES INC.

INTERIOR FINISH GROUP (CONTINUED)

HARDWARE (CONTINUED)

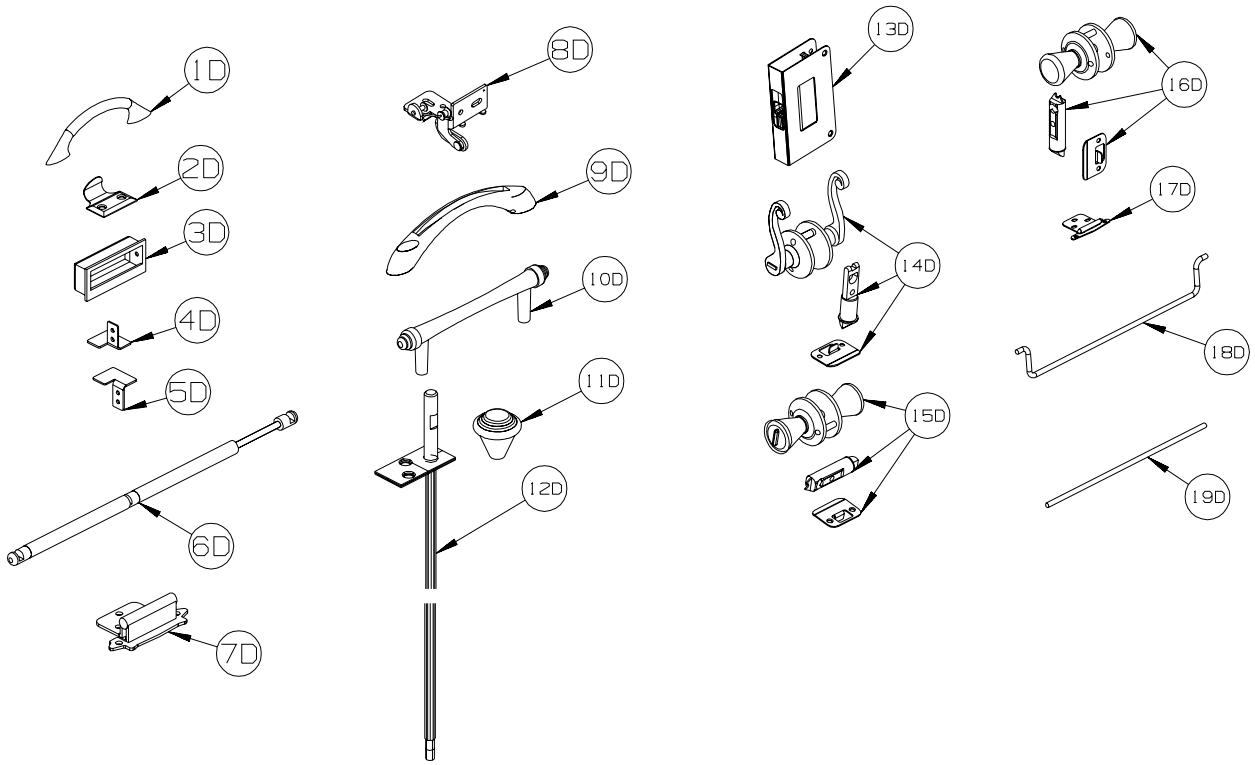

KEY	PART NUMBER	U/M	DESCRIPTION
1D	137446-01-01A	EA	PULL - CABINET - CHROME/BRASS - SPIRIT 300 SERIES, SUNOVA D-SERIES
2D	137463-01-01A	EA	LIFT - HOOK - SATIN BRASS
2D	137463-01-02A	EA	LIFT - HOOK - PEWTER
3D	139136-01-02A	EA	HANDLE - .75” RECESSED - PEWTER
3D	139136-02-01A	EA	HANDLE - .35” RECESSED - BRASS
3D	139136-02-02A	EA	HANDLE - .35” RECESSED - PEWTER
4D	139264-01-02B	EA	STOP - DOOR - TAMBOUR/RH HAND - E-COATED
5D	139264-02-02B	EA	STOP - DOOR - TAMBOUR/LH HAND - E-COATED
6D	142569-07-000	EA	SPRING/GAS - 20 LB - 20" EXTENDED/12" COMPRESSED
6D	142569-15-000	EA	SPRING/GAS - 120 LB - 20" EXTENDED/12" COMPRESSED
6D	142569-16-000	EA	SPRING/GAS - 90 LB - 20" EXTENDED/12" COMPRESSED
6D	142569-29-000	EA	SPRING/GAS - 20 LB - 9.9" EXTENDED/5.9" COMPRESSED
7D	143468-02-03A	EA	HINGE - SELF CLOSING - SATIN NICKEL
8D	144488-01-02A	EA	HINGE - CABINET - NICKEL
9D	144917-01-01A	EA	PULL - DRAWER - SATIN NICKEL - TOUR R-SERIES
10D	145172-01-02A	EA	PULL - CABINET DOOR - CHROME - ADVENTURER G-SERIES, JOURNEY P-SERIES
11D	145172-02-02A	EA	KNOB - CABINET DOOR - CHROME - ADVENTURER G-SERIES, JOURNEY P-SERIES
12D	145939-03-01A	EA	ROD/LATCH - AISLE DOOR - BRASS
13D	145939-04-02A	EA	LATCH/SLIDE - AISLE DOOR(1" THICK DOOR)-NICKEL/BLACK SLIDE
14D	146064-01-01A	EA	LOCK/PRIVACY (LOCKING) LEVER STYLE - POLISHED BRASS
14D	146064-01-02A	EA	LOCK/PRIVACY (LOCKING) LEVER STYLE - SATIN PEWTER
15D	146064-05-01A	EA	LOCK/PRIVACY (LOCKING) KNOB STYLE - SATIN NICKEL
16D	146064-06-01A	EA	LOCK/PASSAGE (NON LOCKING) KNOB STYLE - SATIN NICKEL
17D	146553-01-01A	EA	HINGE - CABINET DOOR - BURNISHED BRASS
17D	146553-01-03A	EA	HINGE - CABINET DOOR - SATIN NICKEL
18D	146801-01-01A	EA	ROD/TOWEL BAR (OFFSET) - BRASS
18D	146801-01-02A	EA	ROD/TOWEL BAR (OFFSET) - PEWTER
19D	146840-03-02A	EA	ROD - .25" X 11.7" - PEWTER
19D	146840-04-02A	EA	ROD - .25" X 13.1" - PEWTER
19D	146840-05-02A	EA	ROD - .25" X 14.8" - PEWTER
19D	146840-07-02A	EA	ROD - .25" X 4.2" - PEWTER

COPYRIGHT © 2007 WINNEBAGO INDUSTRIES INC.

INTERIOR FINISH GROUP (CONTINUED)

HARDWARE (CONTINUED)

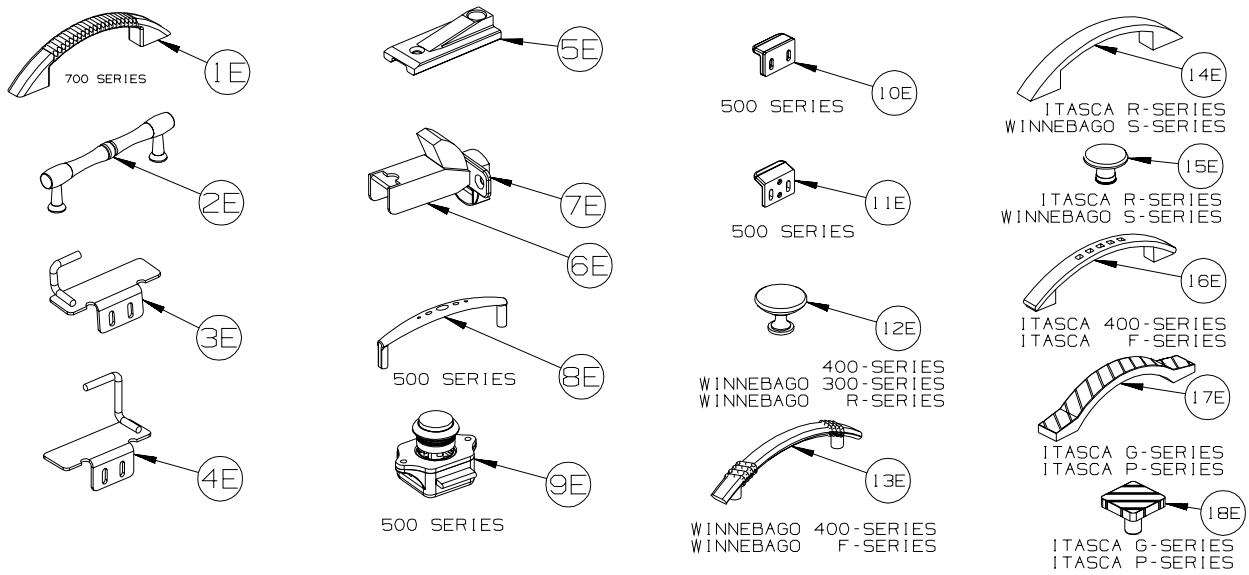

KEY	PART NUMBER	U/M	DESCRIPTION
1E	148816-01-01A	EA	PULL - CABINET DOOR - POLISHED BRASS - 331K ONLY
1E	148816-01-02A	EA	PULL - CABINET DOOR - NICKEL - ASPECT, CAMBRIA 700-SERIES
2E	149090-01-02A	EA	PULL - CABINET DOOR - NICKEL - OUTLOOK 300-SERIES, SIGHTSEER D-SERIES
3E	149607-01-02B	EA	GUIDE - F/POCKET DOOR - 1.6” BENT ROD - E-COATED
3E	149607-03-02B	EA	GUIDE - F/POCKET DOOR - 2.9” BENT ROD - E-COATED
4E	149607-04-02B	EA	GUIDE - F/POCKET DOOR - E-COATED
5E	150983-01-01A	EA	STRIKE/BLOCK - WEDGE STYLE - F/SLIDE DOOR - 3" X 1.2" - BLACK
6E	151305-01-01A	EA	HINGE - CONCEALED/SELF CLOSING - BRASS
7E	151305-02-01A	EA	PLATE/MOUNTING - F/HINGE - WHITE
8E	151372-01-01A	EA	PULL - DOOR/DRAWER - NICKLE - VIEW & NAVION 500-SERIES
9E	151380-01-01A	EA	LATCH - CABINET DOOR - PUSH BUTTON - VIEW & NAVION 500-SERIES
10E	151380-02-01A	EA	STRIKE - CABINET DOOR - VIEW & NAVION 500-SERIES
11E	151380-03-01A	EA	STRIKE - CABINET DOOR - VIEW & NAVION 500-SERIES
12E	152080-01-01A	EA	PULL-NICKEL - OUTLOOK 300-SERIES, MINNIE WINNIE, SUNDANCER 400-SERIES, TOUR R-SERIES
13E	152302-01-01A	EA	PULL - CABINET DOOR - SATIN NICKEL - MINNIE WINNIE 400-SERIES, VOYAGE F-SERIES
14E	152304-01-01A	EA	PULL - CABINET DOOR - BRONZE- ELLIPSE R-SERIES
14E	152304-01-02A	EA	PULL - CABINET DOOR - SATIN NICKEL - VECTRA S-SERIES
15E	152305-01-01A	EA	KNOB - DOOR/DRAWER - BRONZE - ELLIPSE R-SERIES
15E	152305-01-02A	EA	KNOB - DOOR/DRAWER - SATIN NICKEL- VECTRA S-SERIES
16E	152950-01-01A	EA	PULL - DOOR/DRAWER - BRUSHED NICKEL - SUNDANCER 400-SERIES, SUNRISE F-SERIES
17E	152951-01-01A	EA	PULL - DOOR/DRAWER - PEWTER - SUNCRUISER G-SERIES, MERIDIAN P-SERIES
18E	152952-01-01A	EA	PULL - KNOB/DRAWER - PEWTER - SUNCRUISER G-SERIES, MERIDIAN P-SERIES

COPYRIGHT © 2007 WINNEBAGO INDUSTRIES INC.

INTERIOR FINISH GROUP (CONTINUED)

HARDWARE (CONTINUED)

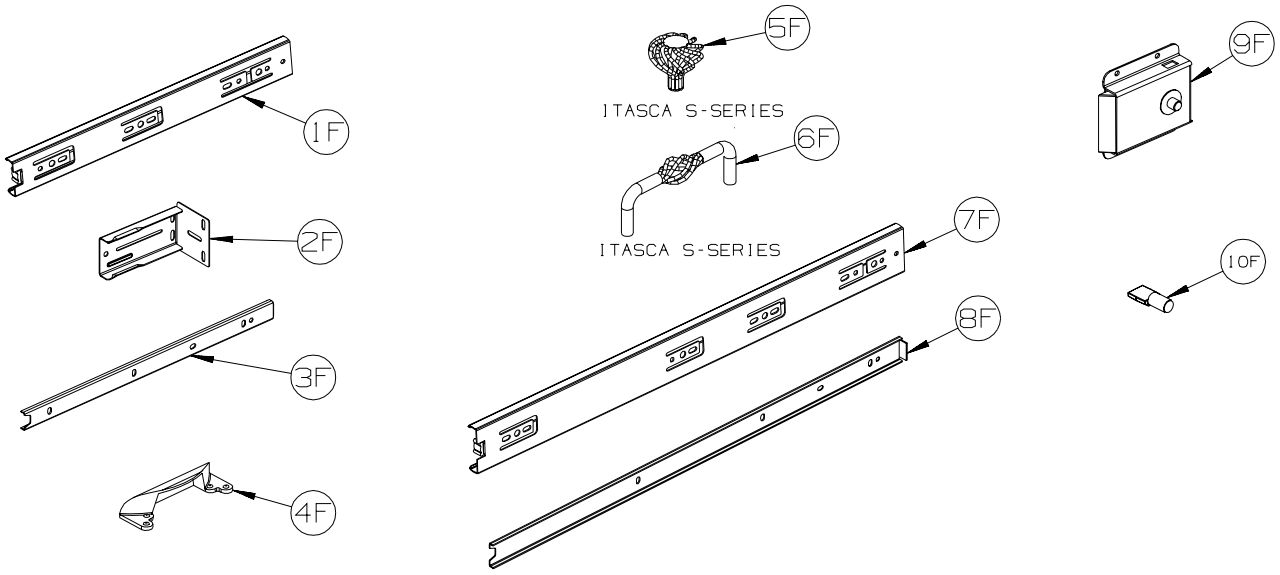

KEY	PART NUMBER	U/M	DESCRIPTION
1F	153000-01-01A	EA	SLIDE - CABINET MOUNT - 11.8"
1F	153000-03-01A	EA	SLIDE - CABINET MOUNT - 13.8"
1F	153000-05-01A	EA	SLIDE - CABINET MOUNT - 15.7"
1F	153000-07-01A	EA	SLIDE - CABINET MOUNT - 17.7"
1F	153000-09-01A	EA	SLIDE - CABINET MOUNT - 19.7"
1F	153000-11-01A	EA	SLIDE - CABINET MOUNT - 21.6"
1F	153000-14-01A	EA	SLIDE - CABINET MOUNT - 23.6"
1F	153000-16-01A	EA	SLIDE - CABINET MOUNT - 7.9"
1F	153000-18-01A	EA	SLIDE - CABINET MOUNT - 9.8"
2F	153000-13-01A	EA	BACKSOCKET - DRAWER SLIDE
3F	153000-02-01A	EA	SLIDE - DRAWER MOUNT - 11.8"
3F	153000-04-01A	EA	SLIDE - DRAWER MOUNT - 13.8"
3F	153000-06-01A	EA	SLIDE - DRAWER MOUNT - 15.7"
3F	153000-08-01A	EA	SLIDE - DRAWER MOUNT - 17.7"
3F	153000-10-01A	EA	SLIDE - DRAWER MOUNT - 19.7"
3F	153000-12-01A	EA	SLIDE - DRAWER MOUNT - 21.6"
3F	153000-15-01A	EA	SLIDE - DRAWER MOUNT - 23.4"
3F	153000-17-01A	EA	SLIDE - DRAWER MOUNT - 7.9"
3F	153000-19-01A	EA	SLIDE - DRAWER MOUNT - 9.8"
4F	153308-01-01A	EA	PULL - VANITY STOOL - SATIN NICKEL
5F	153335-01-01A	EA	PULL - KNOB - DOOR/DRAWER - ANTIQUE PEWTER - HORIZON S-SERIES
6F	153335-02-01A	EA	PULL - DOOR/DRAWER - ANTIQUE PEWTER - HORIZON S-SERIES
7F	153352-01-01A	EA	SLIDE - PANTRY - 19.7" - CABINET MOUNT
8F	153352-02-01A	EA	SLIDE - PANTRY - 19.5" - DRAWER MOUNT
9F	153353-01-01A	EA	LATCH - SLIDING/FLUSH - BLACK
10F	154385-01-01A	EA	PIN - SUPPORT/GLASS DOOR - 1/4" - BRASS
10F	154385-01-02A	EA	PIN - SUPPORT/GLASS DOOR - 1/4" - NICKEL

COPYRIGHT © 2007 WINNEBAGO INDUSTRIES INC.

LABELS GROUP

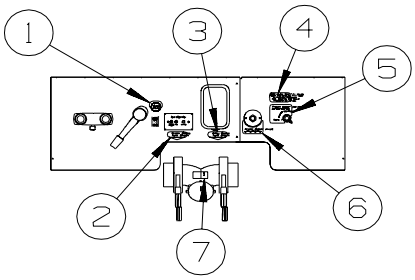

30B, 33T, 34A SERVICE PANEL

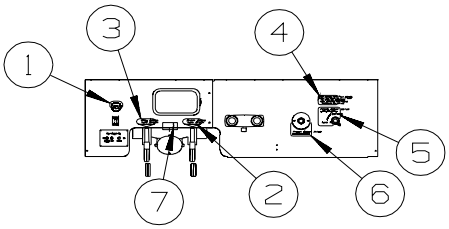

35N SERVICE PANEL

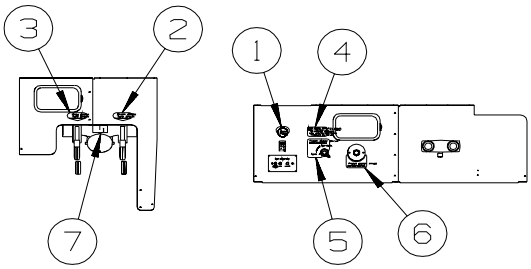

29R SERVICE PANEL

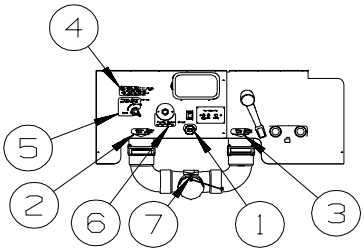

26P SERVICE PANEL

KEY	PART NUMBER	U/M	DESCRIPTION
1	152544-03-01A	EA	LABEL - SWITCHES
2	152543-03-01A	EA	LABEL - BLACK WASTE
3	152541-03-01A	EA	LABEL - GRAY WASTE
4	154292-01-01A	EA	LABEL - TANK FILL VALVE
5	152548-01-01A	EA	LABEL - VALVE/FRESH
6	152538-01-01A	EA	LABEL - FRESH WATER - PANTONE/CLEAR
7	144649-01-01A	EA	LABEL - ADJUSTABLE VALVE - WHITE ON CLEAR

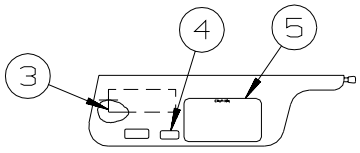

LABELS SHALL BE LOCATED ON OPPOSITE SIDE OF VISOR THAT THE AIR BAG LABEL IS INSTALLED ON

D, F AND C-BODIES

TYPICAL SEAT AND BELT CONFIGURATIONS

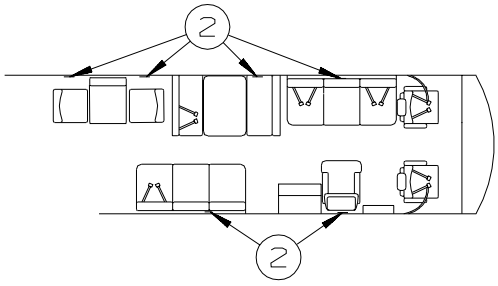

FOLDING CHAIRS

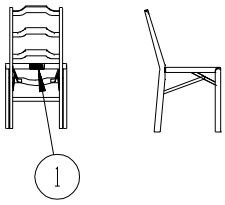

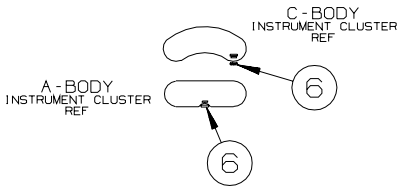

KEY	PART NUMBER	U/M	DESCRIPTION
1	134537-01-01A	EA	LABEL - OCCUPANCY - CHAIR - US
1	134537-02-01A	EA	LABEL - OCCUPANCY - CHAIR - CSA - CANADIAN
2	134538-01-01A	EA	LABEL - OCCUPANCY - NO SEAT BELT - BLACK ON CLEAR - US
2	134538-02-01A	EA	LABEL - OCCUPANCY - NO SEAT BELT - BLACK ON CLEAR - CSA - CANADIAN
3	126611-01-000	EA	LABEL - AIR BAG - VISOR
4	099689-01-000	EA	LABEL - WARNING - CANCER/TOXICITY
5	056259-01-000	EA	LABEL - SAFETY CHECK LIST
6	155692-01-01A	EA	LABEL - ODOMETER - READ IN MILE - BLACK/WHITE
6	155692-01-02A	EA	LABEL - ODOMETER - READ IN MILE - WHITE/CLEAR

COPYRIGHT © 2007 WINNEBAGO INDUSTRIES INC.

LABELS GROUP (CONTINUED)

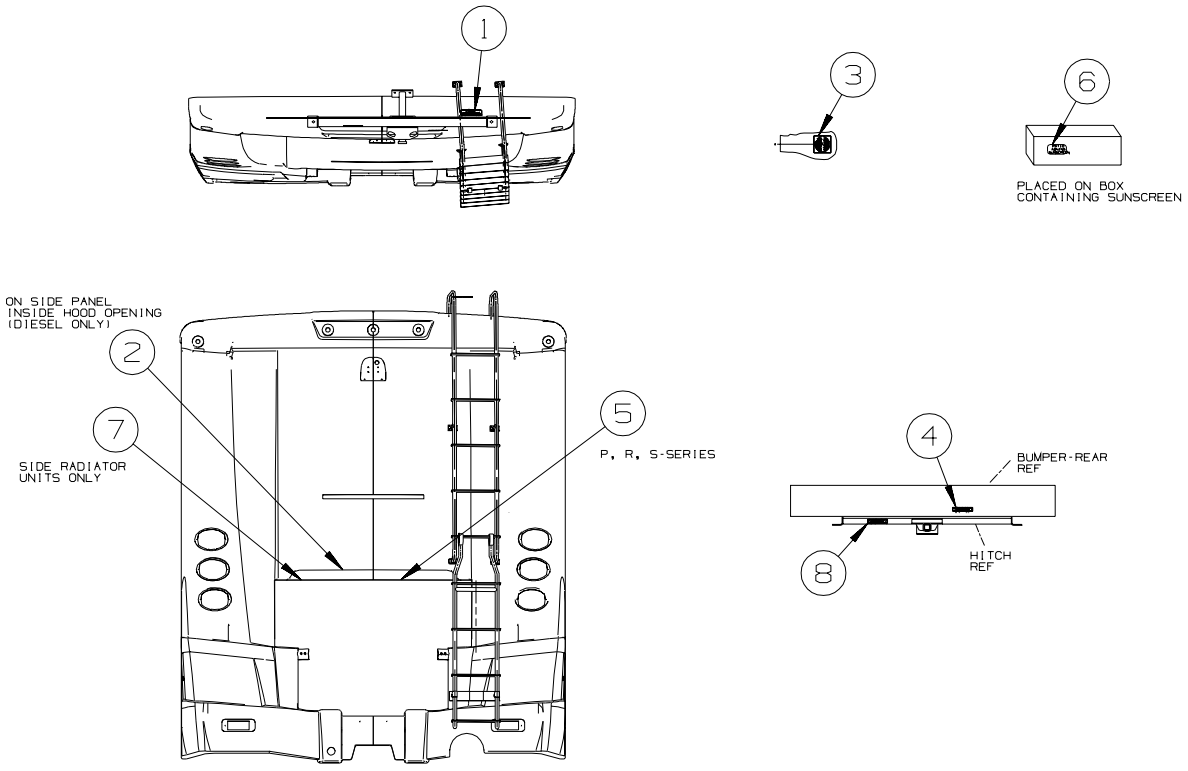

KEY	PART NUMBER	U/M	DESCRIPTION
1	128218-01-01A	EA	LABEL - WARNING - SLIPPERY ROOF
2	116756-03-000	EA	LABEL - WARNING - ETHER/STARTING - RED W/WHITE BACKGROUND
3	120431-01-000	EA	LABEL - LOCATION - COAXIAL CABLE/SATELLITE ANTENNA
4	129669-01-01A	EA	LABEL - HITCH/VEHICLE RATE - 350 - WHITE ON CLEAR - 500 SERIES & F35D ONLY
4	129669-01-02A	EA	LABEL - HITCH/VEHICLE RATE - 350 - BLACK ON CLEAR - 500 SERIES & F35D ONLY
4	129669-02-01A	EA	LABEL - HITCH/VEHICLE RATE - 500 - WHITE ON CLEAR
4	129669-02-02A	EA	LABEL - HITCH/VEHICLE RATE - 500 - BLACK ON CLEAR
5	156213-01-01A	EA	LABEL - CHASSIS BATTERY DISCONNECT - WHITE/BLACK
6	156214-01-01A	EA	LABEL - PATIO AWNING SUNSCREEN - WHITE/BLACK
7	134359-01-01A	EA	LABEL - WARNING - DRIVE BELTS
8	129669-01-01A	EA	LABEL - HITCH/VEHICLE RATE - 350 - WHITE ON CLEAR - 300, 400, 500, 700 SERIES & F35D ONLY
8	129669-01-02A	EA	LABEL - HITCH/VEHICLE RATE - 350 - BLACK ON CLEAR - 300, 400, 500, 700 SERIES & F35D ONLY
8	129669-02-01A	EA	LABEL - HITCH/VEHICLE RATE - 500 - WHITE ON CLEAR
8	129669-02-02A	EA	LABEL - HITCH/VEHICLE RATE - 500 - BLACK ON CLEAR

COPYRIGHT © 2007 WINNEBAGO INDUSTRIES INC.

LABELS GROUP (CONTINUED)

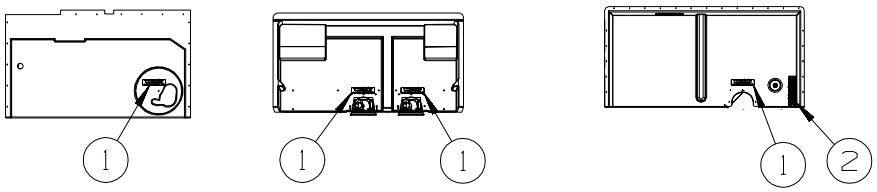

TYPICAL WATER CENTER COMPARTMENTS

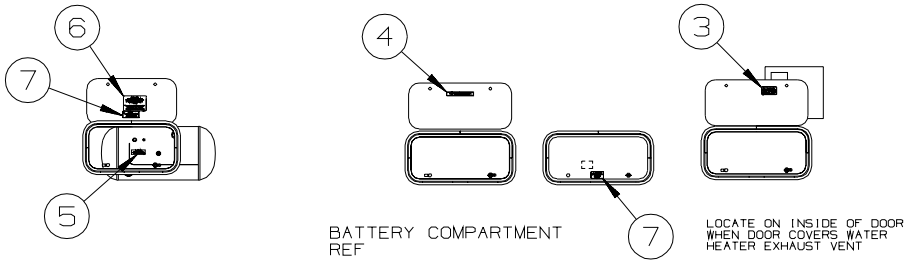

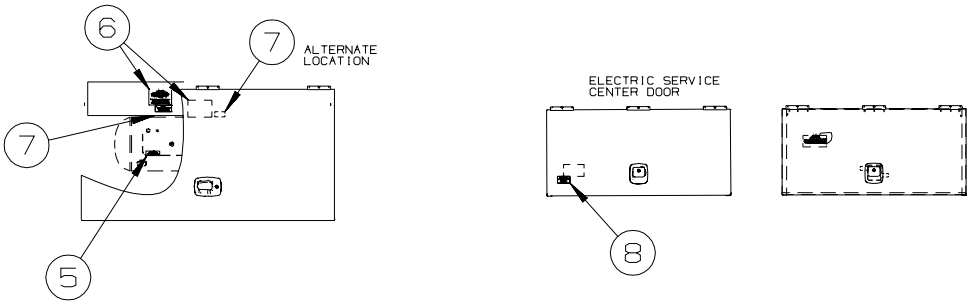

KEY	PART NUMBER	U/M	DESCRIPTION
1	123562-01-000	EA	LABEL - SERVICE/UTILITY ACCESS
2	147845-01-01A	EA	LABEL - DRIP VALVE
3	113402-01-000	EA	LABEL - CAUTION - WATER HEATER EXHAUST
4	065748-01-000	EA	LABEL - WARNING - BATTERY CHARGING - UL
4	065748-02-000	EA	LABEL - WARNING - BATTERY CHARGING - CSA - CANADIAN
5	079965-01-000	EA	LABEL - LPG - 80% CAPACITY
6	124520-01-02A	EA	LABEL - LP GAS ONLY - WHITE ON CLEAR
6	124520-01-01A	EA	LABEL - LP GAS ONLY - BLACK ON CLEAR
6	023769-01-000	EA	LABEL - WARNING - LPG - CANADIAN - CANADIAN
7	124519-01-02A	EA	LABEL - WARNING/REFUELING - WHITE ON CLEAR
7	124519-01-01A	EA	LABEL - WARNING/REFUELING - BLACK ON CLEAR
7	124519-02-02A	EA	LABEL - WARNING/REFUELING - WHITE ON CLEAR - CSA - CANADIAN
7	124519-02-01A	EA	LABEL - WARNING/REFUELING - BLACK ON CLEAR - CSA - CANADIAN
8	125306-01-01A	EA	LABEL - ELECTRICAL ENTRANCE - 110V 30 AMP - BLACK ON CLEAR
8	125306-01-02A	EA	LABEL - ELECTRICAL ENTRANCE - 110V 30 AMP - WHITE ON CLEAR
8	125306-04-01A	EA	LABEL - ELECTRICAL ENTRANCE-120/20V 50 AMP-BLACK ON CLEAR
8	125306-04-02A	EA	LABEL - ELECTRICAL ENTRANCE-120/240V 50 AMP-WHITE ON CLEAR

COPYRIGHT © 2007 WINNEBAGO INDUSTRIES INC.

LABELS GROUP (CONTINUED)

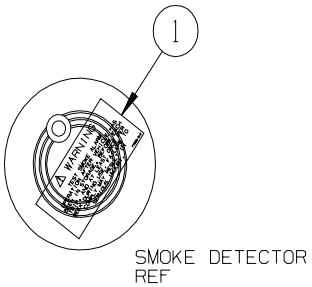

SMOKE DETECTOR
REF

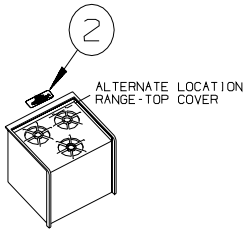

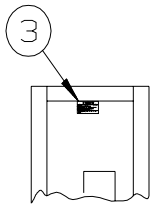

INSIDE OF GALLEY
CABINET DOOR
REF

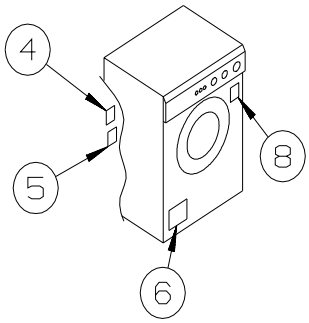

SLIDEOUT SWITCH

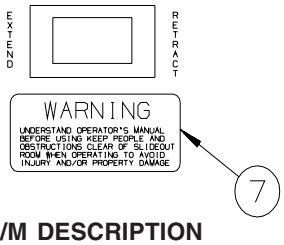

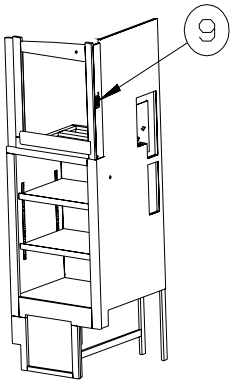

SWING OUT/SLIDING TV INSTL

KEY	PART NUMBER	U/M	DESCRIPTION
1	077956-01-000	EA	LABEL - WARNING/SMOKE DETECTOR
2	134539-01-01A	EA	LABEL - WARNING - STOVE/HEATING - US - BLACK ON CLEAR
2	134540-01-01A	EA	LABEL - WARNING - STOVE/HEATING - CSA - BLACK ON CLEAR - CANADIAN
3	073998-01-000	EA	LABEL - LPG/ODOR WARNING
4	147525-01-000	EA	LABEL - DRYER VENT CUTOUT
5	147524-01-000	EA	LABEL - DRYER VENTING
6	130670-01-01A	EA	LABEL - CAUTION DRYER VENTING - BLACK ON CLEAR - WASHER/DRYER
7	116549-02-000	EA	LABEL - WARNING - SLIDEOUT - 1.18” x 3”
8	153640-01-01A	EA	LABEL - WINTERIZATION - WASHER DRYER - WASHER/DRYER
9	079966-01-000	EA	LABEL - WARNING - STOWED - MOTION

COPYRIGHT © 2007 WINNEBAGO INDUSTRIES INC.

LABELS GROUP (CONTINUED)

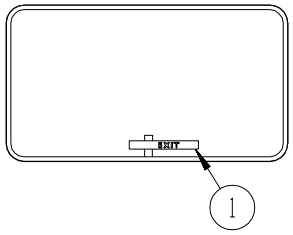

EXIT WINDOW
(POP-OUT STYLE)

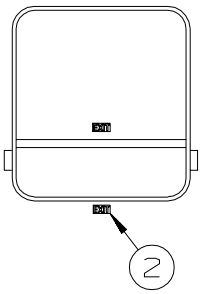

EXIT WINDOW
(HINGE STYLE)

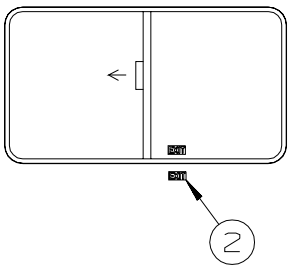

EXIT WINDOW
(SLIDER STYLE)

KEY	PART NUMBER	U/M	DESCRIPTION
1	107571-01-000	EA	LABEL - EXIT/ESCAPE WINDOW
2	039290-01-000	EA	LABEL - WARNING - EXIT

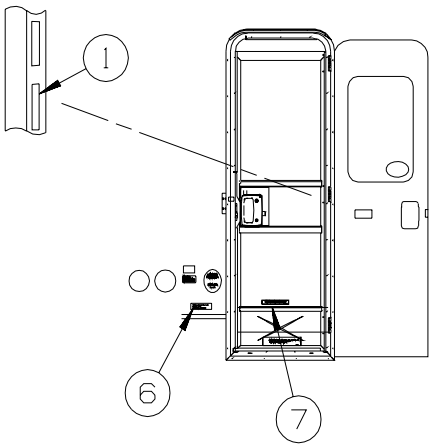

ENTRANCE DOOR

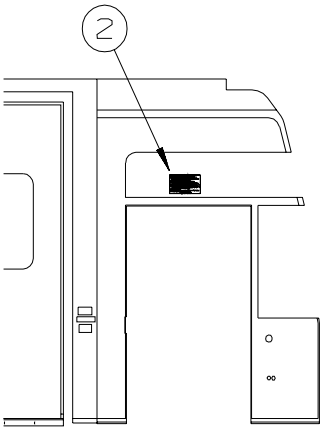

DRIVERS DOOR
(G-SERIES)

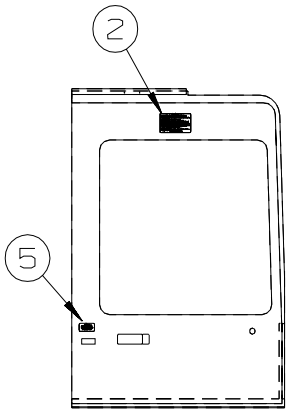

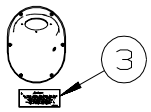

GASOLINE ONLY

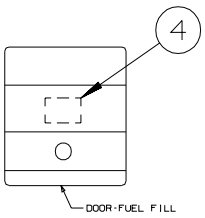

DOOR FUEL FILL
DIESEL ONLY

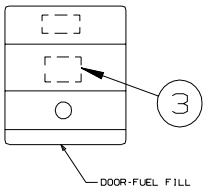

DOOR FUEL FILL
GASOLINE ONLY

KEY	PART NUMBER	U/M	DESCRIPTION
1	135869-01-02A	EA	LABEL - MERCURY CONTENT - WHITE ON CLEAR
1	135869-01-01A	EA	LABEL - MERCURY CONTENT - BLACK 0N CLEAR
2	056259-01-000	EA	LABEL - SAFETY CHECK LIST
3	124519-01-02A	EA	LABEL - WARNING/REFUELING - WHITE ON CLEAR
3	124519-01-01A	EA	LABEL - WARNING/REFUELING - BLACK ON CLEAR
3	124519-02-02A	EA	LABEL - WARNING/REFUELING - WHITE ON CLEAR - CSA - CANADIAN
3	124519-02-01A	EA	LABEL - WARNING/REFUELING - BLACK ON CLEAR - CSA - CANADIAN
4	068383-01-000	EA	LABEL - DIESEL FUEL
5	099689-01-000	EA	LABEL - WARNING - CANCER/TOXICITY
6	099509-01-000	EA	LABEL - AWNING INSTALLATION
7	065748-01-000	EA	LABEL - WARNING - BATTERY CHARGING - UL
7	065748-02-000	EA	LABEL - WARNING - BATTERY CHARGING -CSA - CANADIAN

COPYRIGHT © 2007 WINNEBAGO INDUSTRIES INC.

LP GROUP

LP SYSTEM

KEY	PART NUMBER	U/M	DESCRIPTION
	045703-03-000	EA	HOSE - LP - 3/8"ID X 18" - 3/8"MPT X 1/2"F SWIVEL - US
	045703-12-000	EA	HOSE - LP - 3/8"ID X 18" - 3/8"MPT X 1/2"F SWIVEL - CSA
	045703-14-000	EA	HOSE - LP - 3/8"ID X 157.5" - 1/2"F SWIVEL X 1/2"F SWIVEL
	045703-15-000	EA	HOSE - LP - 3/8"ID X 142" - 1/2"F SWIVEL X 3/8"F SWIVEL
	045703-17-000	EA	HOSE - LP - 3/8"ID X 24" - 1/2"F SWIVEL X 3/8"F SWIVEL US
*	144116-04-000	EA	TANK - LP - 60 LB - 14"D X 29.75"L
	106150-05-000	EA	REGULATOR - TWO STAGE
	144485-01-000	EA	COVER - LP REGULATOR
	010589-01-000	EA	NIPPLE - PIPE - 1/2" X 1 1/2" - BLACK
	040440-02-000	EA	TRANSMITTER - DIAL/BOLT-ON - 0-90 OHM 2 TERM(POWER/GROUND)
	141090-01-02B	EA	SHIELD - HEAT - E-COATED
	139061-02-02B	EA	COVER - LP LINES - FRONT - E-COATED - D30B, D33T, D35N
	139061-03-02B	EA	COVER - LP LINES - FRONT - E-COATED - D26P
	139062-02-02B	EA	COVER - LP LINES - FRONT/TOP - E-COATED - D30B, D35N
	151786-01-01A	EA	BRACKET - LP TANK MOUNTING
	010326-01-000	EA	ADAPTER - FLARE - W/CONE GASKET - 3/8"F X 1/2"F
	010329-01-000	EA	ADAPTER - 1/2"F X 1/2"MPT - BRASS
	010323-01-000	EA	ADAPTER - 3/8"F X 1/2"MPT - BRASS
	024250-01-000	EA	ADAPTER - BRASS - 3/8"F X 1/2"FPT
	010265-01-000	EA	ELBOW - BRASS - 90 DEGREE - 3/8"F X 1/2"FPT
	010377-02-000	EA	NUT - 3/8" FLARE - FORGED - BRASS
	010380-02-000	EA	NUT - 1/2" FLARE - FORGED - BRASS

***COMPONENT PARTS LISTED LATER IN THIS GROUP**

COMPONENT PARTS FOR LP SYSTEM

144116-04-000

KEY	PART NUMBER	U/M	DESCRIPTION	VENDOR NO.
	040421-01-712	EA	VALVE-SERV. W/O VAPOR RELIEF	V20373/V21202
	040421-01-713	EA	VALVE-RELIEF 1" W/SPRING 7"	V12560/V21207
	144116-01-700	EA	VALVE-OUTAGE(NO STEM REMOVE)	V20058
	144116-01-701	EA	VALVE/FILL 80 % W/YELLOW CAP	V13414
	144116-04-700	EA	FLOAT/SENDING UNIT W/O DIAL	G11530
	144116-04-701	EA	DIAL - TRANSMITER	G12845

COPYRIGHT © 2007 WINNEBAGO INDUSTRIES INC.

SEALANTS & FASTENERS GROUP

SEALANTS & ADHESIVES

KEY	PART NUMBER	U/M	DESCRIPTION
	004001-02-000	EA	GUN - PLEXUS ADHESIVE - W/O NOZZLE
	004001-05-000	EA	ADHESIVE - SCOTCH-WELD - 3M DP100 - CLEAR - 50ML
	004011-01-000	EA	ADHESIVE-3M-4475 TUBE
	010405-02-000	EA	TAPE - THREAD SEALING - 3/8"
	034552-06-000	EA	SILICONE - TUBE - W/NOZZLE - OFF WHITE
	063642-01-000	FT	TAPE - ADHESIVE - .4" X 1.5" X 180'
	064075-07-000	FT	SEAL - BULB - W/WIRED U CHANNEL - .3" X .5" CHANNEL-BLACK
	067788-01-000	EA	ADHESIVE - SPRAY - 3M - 19.5 OZ AEROSOL CAN
	069640-01-000	FT	SEALER - RIBBON - 1/4"DIAMETER X 30 FT - BLACK OR GRAY
	069640-02-000	FT	SEALER - TAPE - 1/8"THICK X 1/2"WIDE X 60 FT - GRAY
	069640-03-000	FT	SEALER - TAPE - 1/8"THICK X 3/4"WIDE X 60 FT - BLACK
	069640-07-000	FT	SEALER - TAPE - 3/32"THICK X 2"WIDE X 45 FT - GRAY
	069640-09-000	FT	SEALER - TAPE - 1/32"THICK X 2 1/2"WIDE X 80 FT - BRT WHT
	069640-10-000	FT	SEALER - TAPE - 1/32"THICK X 1 1/2"WIDE X 90 FT - BRT WHT
	069640-11-000	FT	SEALER - TAPE - 3/16"THICK X 3/8"WIDE X 40 FT - BLACK
	069640-13-000	FT	SEALER - TAPE - 3/32"THICK X 2"WIDE X 45 FT - BLACK
	069640-14-000	FT	SEALER - TAPE - 1/16"THICK X 1"WIDE X 100 FT - BLACK
	069640-15-000	FT	SEALER - TAPE - 1/16"THICK X 3/8"WIDE X 100 FT - BRT WHT
	069640-17-000	FT	SEALER - TAPE - 1/32"THICK X 1"WIDE X 150 FT - GRAY
	069640-18-000	FT	SEALER - TAPE - 1/8"THICK X 1/2"WIDE X 60 FT - BRT WHT
	069640-19-000	FT	SEALER - TAPE - 1/8"THICK X 3/4"WIDE X 60 FT - BRT WHT
	069640-20-000	FT	SEALER - TAPE - 1/8"THICK X 1/2"WIDE X 60 FT - BLACK
	069640-21-000	FT	SEALER - TAPE - 1/16"THICK X 1/2"WIDE X 100 FT - BRT WHT
	069640-22-000	FT	SEALER - TAPE - 1/32"THICK X 1/4"WIDE X 200 FT - BRT WHT
	069640-23-000	FT	SEALER - TAPE - 1/16"THICK X 3/4"WIDE X 100 FT - BRT WHT
	069640-27-000	FT	SEALER - TAPE - 1/16"THICK X 2 1/4"WIDE X 50 FT - BRT WHT
	069640-28-000	FT	SEALER - TAPE - 1/32"THICK X 1 7/8"WIDE X 90 FT - GRAY
	069640-30-000	FT	SEALER - TAPE - 1/32"THICK X 5/8"WIDE X 50 FT - GRAY
	069640-31-000	FT	SEALER - TAPE - 1/4"THICK X 3/4"WIDE X 15 FT - BLACK
	069640-32-000	FT	SEALER - TAPE - 1/16"THICK X 3/8"WIDE X 100 FT - BLACK
	069640-33-000	FT	SEALER - RIBBON - 3/8"DIAMETER X 20 FT - BLACK
	069640-34-000	FT	SEALER - RIBBON - 1/4"DIAMETER X 30 FT - BRIGHT WHITE
	072889-10-000	EA	SEALANT/URETHANE (HV) - TUBE W/NOZZLE TIP - BRIGHT WHITE
	072889-13-000	EA	SEALANT/URETHANE (LV) - TUBE W/NOZZLE TIP - VW WHITE
	072889-28-000	EA	SEALANT/URETHANE-10 OZ TUBE W/NOZZLE-SELF LEVELING-BRT WHT
	076322-01-000	FT	TAPE-DOUBLE COATED/ADHESIVE BK-.03"THK X .8"W X 216'- WHT
	076322-02-000	FT	TAPE-DOUBLE COATED/ADHESIVE BK-.05"THK X 1"W X 108' - WHT
	076322-03-000	FT	TAPE-DOUBLE COATED/ADHESIVE BK-.05"THK X .5"W X 108' - WHT
	076322-05-000	FT	TAPE-DOUBLE COATED/ADHESIVE BK-.05"THK X .8"W X 108' - WHT
	076322-07-000	FT	TAPE-DOUBLE COATED/ADHESIVE BK-.05"THK X .5"W X 200' - BLK
	076322-11-000	FT	TAPE-DOUBLE COATED/ADHESIVE BK-.02"THK X 1"W X 216' - CLR
	076322-13-000	FT	TAPE - FOAM/DOUBLE COATED - .020"THK X .75"W - CLEAR
	076322-21-000	FT	TAPE - FOAM/DOUBLE COATED - .045"THK X .50"W
	076322-22-000	FT	TAPE - FOAM/DOUBLE COATED - .045"THK X .75"W
	076322-23-000	FT	TAPE - FOAM/DOUBLE COATED - .045"THK X 1"W
	076322-25-000	FT	TAPE - FOAM/DOUBLE COATED - .025"THK X .5"W
	086276-01-000	EA	TAPE - DOUBLE SIDED - 1/2" WIDE X 108' LONG (SOLD BY ROLL)
	088479-01-000	EA	TAPE - ALUMINUM - 3"
	090340-01-000	FT	SEAL - FOAM - CLOSED CELL - 1/4" X 1/2" X 50'
	091255-02-000	FT	SEAL - ADHESIVE BACKED/FOAM - 3/64"THICK X 3/16"W X 1000'
	091255-03-000	FT	SEAL - ADHESIVE BACKED/FOAM - 1/4" THICK X 1/4"W X 1000'
	094401-01-000	EA	SEALER - BODY SEAM - FLEXICLEAR
	094401-04-000	EA	SEALER - BODY SEAM - CLEAR
	094401-05-000	EA	SEALER - BODY SEAM - 20OZ BLACK
	094401-06-000	EA	SEALER - BODY SEAM - 12OZ BLACK
	094401-07-000	EA	SEALER - BODY SEAM - CLEAR
	098408-01-000	FT	SEAL - SPONGE RUBBER - CLOSED CELL
	099069-01-000	FT	SEAL - RUBBER - CLOSED SPONGE - .5" WIDE X .12" THICK-BLK
	099418-01-000	FT	SEAL - D-SECTION/ADHESIVE BACK - .44” X .44” - BLK RUBBER
	107828-01-000	EA	SEALANT - SB - 190 EVERSEAL
	108716-02-000	EA	SILICONE - W/NOZZLE - BUFF - SELF LEVELING
	110274-01-000	FT	TAPE - DOUBLE SIDED/FOAM - .45" X 1" X 216' - BLACK
	112864-01-000	FT	SEAL - FOAM/BUTYL COVERED - 3/8" X 35'
	112864-02-000	FT	FOAM - BUTYL COVERED - 5/16" X 44'

COPYRIGHT © 2007 WINNEBAGO INDUSTRIES INC.

SEALANTS & FASTENERS GROUP (CONTINUED)

SEALANTS & ADHESIVES (CONTINUED)

KEY	PART NUMBER	U/M	DESCRIPTION
	112864-04-000	FT	FOAM - BUTYL COVERED - 3/8" X 1/8"
	112901-02-000	EA	ADHESIVE - PLEXUS - MA330 - 50ML - GRAY
	112901-03-000	EA	ADHESIVE - PLEXUS - MA300 - 50ML - WHITE
	112902-01-000	EA	NOZZLE - ELEMENT - 3/8" X 24
	112902-03-000	EA	MIXER NOZZLE - F/GUN #00400102000 - SCOTCH-WELD & PLEXUS
	112902-04-000	EA	NOZZLE - ELEMENT - 1/4" X 3.5"
	112902-05-000	EA	NOZZLE - BAYONET - 3/8" X 18
	112902-06-000	EA	NOZZLE - ELEMENT - 1/2" X 32
	120074-02-03A	EA	SILICONE - TUBE - W/O NOZZLE - LOW ODOR - SMOKEY WHITE
	120534-01-01A	EA	TAPE - SCOTCH - 3M - 1/2" FINE LINE
	123244-01-000	FT	TAPE - DOUBLE SIDED/FOAM - 5/64"THICK X 3/4"WIDE X 108'
	123816-01-000	FT	TAPE - DOUBLE SIDED - 1" X .020" X 200' - CLEAR
	123816-02-000	FT	TAPE - DOUBLE SIDED - 1/2" X .035" X 200' - CLEAR
	123816-03-000	FT	TAPE - DOUBLE SIDED - 1/2" X .020" X 200' - CLEAR
	123816-04-000	FT	TAPE - DOUBLE SIDED - 6" X .0035" X 750' - CLEAR
	123816-06-000	FT	TAPE - DOUBLE SIDED - 3/4" X 3/4" X 200' - CLEAR
	123816-07-000	FT	TAPE - DOUBLE SIDED - 1 3/4" X 200' - CLEAR
	126427-01-000	EA	ADHESIVE - ALL PURPOSE - ABS/PVC
	126427-02-000	EA	PRIMER - CLEANER - FLEX PIPING
	131264-01-11A	EA	SILICONE - TUBE - W/NOZZLE - BEIGE
	131264-01-12A	EA	SILICONE - TUBE - W/NOZZLE - BONE
	131264-02-01A	EA	SILICONE - TUBE - W/NOZZLE - VW GRAY - BATH ONLY
	131264-03-01A	EA	SILICONE - TUBE - W/O NOZZLE - SELF LEVELING -BRIGHT WHITE
	131264-04-01A	EA	SILICONE/SEALANT/ADHESIVE - FAST CURE F/GLASS/VINYL - B/W
	131264-04-02A	EA	SILICONE/SEALANT/ADHESIVE-FAST CURE F/GLASS/VINYL-SOFT WHT
	131264-05-01A	EA	SILICONE/SEALANT - ODORLESS - TUBE - W/NOZZLE - BLACK
	131264-05-02A	EA	SILICONE/SEALANT - ODORLESS - TUBE - W/NOZZLE - CLEAR
	131384-01-000	EA	ADHESIVE - JET WELD - 10 OZ CARTRIDGE
	132892-07-01A	FT	SEAL - BULB/SINGLE - W/U CHANNEL - .5" X 1" - BLACK
	152038-01-01A	EA	TAPE - PRESERVATION SEAL - 2" X 36YD ROLL - BLACK
	154585-01-01A	FT	SEAL - FOAM TAPE - ADHESIVE BACK - 3/8" X 3/8" - GRAY
	154585-02-01A	FT	SEAL - FOAM TAPE - ADHESIVE BACK - 3/4" X 1/2" - GRAY
	154585-03-01A	FT	SEAL - FOAM TAPE - ADHESIVE 2 SIDED - 1/8" X 3/4" - BLACK
	154585-04-01A	FT	SEAL - FOAM TAPE - ADHESIVE BACK - 5/8" X 1/8" - WHITE
	900390-01-000	EA	NOZZLE - SILICONE TUBE - 2.5" LONG - W/EXTERNAL THREADS
	900390-03-000	EA	NOZZLE - SILICONE TUBE - 2 3/4" LONG W/INTERNAL THREADS
	900563-17-000	EA	TAPE - 2 SIDED, 2" X 36 YDS

BOLTS, NUTS AND WASHERS

KEY	PART NUMBER	U/M	DESCRIPTION
	0MD54F-06-000	EA	NUT - HEX W/SERATED FLANGE
	000C12-04-40B	EA	BOLT - HEX - 1/4-20 X 2 1/2 - GRADE #5 ZINC
	000C12-04-20F	EA	BOLT - HEX - 1/4-20 X 1 1/4 - GRADE #5 - STAINLESS STEEL
	000C12-04-12A	EA	BOLT - HEX - 1/4-20 X 3/4 - PLAIN 5
	000C12-05-16B	EA	BOLT - HEX - 5/16 - 18X1 - GRADE #5 - ZINC
	000C12-05-40B	EA	BOLT - HEX - 5/16"-18 X 2.5" - GRADE #5 - ZINC
	000C12-08-44B	EA	BOLT - HEX - 1/2-13 X 2 3/4 - GRADE #5 - ZINC
	000C12-08-24B	EA	BOLT - HEX - 1/2-13 X 1 1/2 - GRADE #5 - ZINC
	000C13-07-40B	EA	BOLT - HEX - 7/16-20 X 2 1/2 - GRADE #5 - ZINC
	000C13-07-72B	EA	BOLT-HEX,7/16-20X4.50,ZN,5 05 D29R
	000C13-07-48B	EA	BOLT - HEX - 7/16-20 X 3 - GRADE #5 - ZINC
	000C14-07-28B	EA	BOLT - HEX - 7/16-14 X 1 3/4 - GRADE #8 - ZINC
	000C18-05-40A	EA	BOLT - ELEVATOR - 5/16-18 X 2 1/2 - PL
	000C26-04-18B	EA	BOLT - HEX - SERRATED FLANGE - 1/4-20 X 1 1/8 - ZINC
	000C26-04-14B	EA	BOLT - HEX - SERRATED FLANGE - 1/4-20 X 7/8 - ZINC
	000C26-04-12F	EA	BOLT - HEX - SERRATED FLANGE -1/4-20 X 3/4-STAINLESS STEEL
	000C26-04-10B	EA	BOLT - HEX - SERRATED FLANGE - 1/4-20 X 5/8 - ZINC
	000C26-05-12B	EA	BOLT - HEX - SERRATED FLANGE - 5/16-18 X 3/4 - ZINC
	000C26-06-20B	EA	BOLT - HEX - SERRATED FLANGE - 3/8-16 X 1 1/4 - ZINC
	000C26-06-12B	EA	BOLT - HEX - SERRATED FLANGE - 3/8-16 X 3/4 - ZINC
	000C26-06-40B	EA	BOLT - HEX - SERRATED FLANGE - 3/8-16 X 2 1/2 - ZINC
	000C26-06-28B	EA	BOLT - HEX - SERRATED FLANGE - 3/8-16 X 1 3/4 - ZINC
	000C26-08-28B	EA	BOLT - HEX - SERRATED FLANGE - 1/2-13 X 1 3/4 - ZINC
	000C26-08-24B	EA	BOLT - HEX - SERRATED FLANGE - 1/2-13 X 1 1/2 - ZINC

COPYRIGHT © 2007 WINNEBAGO INDUSTRIES INC.

SEALANTS & FASTENERS GROUP (CONTINUED)

BOLTS, NUTS AND WASHERS (CONTINUED)

KEY	PART NUMBER	U/M	DESCRIPTION
	000C27-08-48B	EA	BOLT-CARR 1/2-13X3.00 GR5 - 97 M-SERIES
	000D24-10-00B	EA	NUT - HEX - SELF LOCKING - 10-32 - ZINC
	000D28-10-00B	EA	NUT - HEX - W/NYLON LOCK - 10-32 - ZINC
	000D29-04-00F	EA	NUT - HEX - SELF LOCKING - 1/4 X 20 - STAINLESS STEEL
	000D29-04-00B	EA	NUT - HEX - SELF LOCKING - 1/4 X 20 - ZINC
	000D29-06-00B	EA	NUT - HEX - W/NYLON LOCK - 3/8-16 - ZINC
	000D29-09-00B	EA	NUT - HEX - SELF LOCKING - 9/16-12 - ZINC
	000D34-04-00B	EA	NUT - HEX - LOCKING - 1/4-20 - ZINC
	000D34-06-00B	EA	NUT - HEX - LOCKING - 3/8-16 GRADE C - ZINC
	000D39-04-00B	EA	NUT - HEX - LOCKING W/SERRATED FLANGE - 1/4-20 - ZINC
	000D39-05-00B	EA	NUT - HEX - LOCKING W/SERRATED FLANGE - 5/16-18 - ZINC
	000D39-06-00B	EA	NUT - HEX - LOCKING W/SERRATED FLANGE - 3/8-18 - ZINC
	000D39-07-00B	EA	NUT - HEX - LOCKING W/SERRATED FLANGE - 7/16-14 - ZINC
	000D39-08-00B	EA	NUT - HEX - LOCKING W/SERRATED FLANGE - 1/2-13 - ZINC
	000D44-07-00B	EA	NUT - HEX - LOCKING W/SERRATED FLANGE - 7/16-20 - ZINC
	000D44-08-00B	EA	NUT - HEX - LOCKING W/SERRATED FLANGE - 1/2-20 - ZINC
	000D46-04-00A	EA	NUT - HEX - WELD - 1/4-20 - PLAIN
	000D65-08-00B	EA	NUT - HEX - LOCKING W/SERRATED FLANGE - 8-32 - ZINC
	000D73-08-00C	EA	NUT - HEX FLANGE - 1/2-13
	000D75-09-00B	EA	NUT - HEX LOCKING - 9/16-12 - ZINC
	000D76-06-00B	EA	NUT - HEX FLANGE - 3/8-16
	000E11-04-00F	EA	WASHER - LOCKING - 1/4 MED SPLIT - STAINLESS STEEL
	000E11-07-00B	EA	WASHER - LOCKING - 7/16 MED SPLIT - ZINC
	000E11-08-00B	EA	WASHER - LOCKING - 1/2 MED SPLIT - ZINC
	000E13-17-00B	EA	WASHER - FLAT - 3/8 AR - ZINC
	000E13-18-00B	EA	WASHER - FLAT - 3/8 WIDE - ZINC
	000E13-20-00B	EA	WASHER - FLAT - 7/16 WIDE - ZINC
	000E13-22-00B	EA	WASHER - FLAT - 1/2 WIDE - ZINC
	000E13-26-00B	EA	WASHER - FLAT - 5/8 WIDE - ZINC
	000E14-10-00B	EA	WASHER - LOCKING - #10 EXTERNAL TOOTH - ZINC
	000E16-10-00B	EA	WASHER - HARDENED - 5/8 - FLAT - ZINC
	005081-01-000	EA	NUT - SPEED - C-TYPE - #8 SCREW
	039715-01-000	EA	NUT-SERT - 1/4" DIAMETER - 20 THREADS
	040921-01-000	EA	NUT - SPEED - U TYPE - #10-24 - BLACK
	040921-03-000	EA	NUT - SPEED - U TYPE - #10
	040921-04-000	EA	NUT - SPEED - U TYPE - #8-.59" LENGTH X .44" WIDTH
	040921-05-000	EA	NUT - SPEED - U-TYPE - 8-.67" X .44" WIDE
	041322-01-000	EA	WASHER - FLANGE - 15/32"ID X 2 3/8"OD - F/SEAT BELT MTG
	044364-02-000	EA	NUT - SPEED - FLAT - ROUND
	044533-01-000	EA	WASHER - 1 3/8"OD - FOR BUTTONS - PLASTIC
	051387-06-000	EA	BOLT - CARRIAGE W/O HOLE - 5/16-18 X 9 1/2 - ZINC
	058716-02-000	EA	WASHER - FLAT NYLON
	064081-03-000	EA	NUT - WING 3/8-16 - W/WELD NUT
	077071-01-000	EA	WASHER - FENDER - 3/16"ID X 1"OD
	087234-01-000	EA	NUT - JACK - 1/4 X 20 THD - MOLLY
	088787-12-000	EA	STUD - WELD - 1/4 - 20 X 1.0 LG - MN
	102333-01-06A	EA	BOLT - CARRIAGE - 7/16-14 STAINLESS STEEL CAP
	102540-02-000	EA	SEAL - SCREW
	106956-03-000	EA	BOLT - HEX TAP - 1/2-13NC X 3 - GRADE 5 - FULL THREAD/ZINC
	106956-10-000	EA	BOLT - HEX TAP - 9/16-12NC X 3 5/8 -GRD 5-FULL THREAD/ZINC
	106956-11-000	EA	BOLT - HEX TAP - 1/2-13NC X 2 1/2 - GRD 5-FULL THREAD/ZINC
	107397-01-000	EA	WASHER - FENDER - 3/4"ID X 1"OD
	108067-03-000	EA	STUD - WELD - 1/4 - 20 X 1/2 CD
	109917-03-000	EA	WASHER - 1" X .50"
	109917-04-000	EA	WASHER - 1" X .75"
	128444-01-000	EA	WASHER - SPRING - CONICAL
	135092-02-01A	EA	BOLT - HEX - SERRATED FLANGE - 1/2-20 X 2 1/2-GRADE 5 ZINC
	135092-05-01A	EA	BOLT - HEX - SERRATED FLANGE - 1/2-20 X 1 - GRADE 5 ZINC
	143399-01-01A	EA	NUT/RETAINING - 3/8"- 24 NFT
	144904-01-01A	EA	BOLT - ADJUSTMENT - HEADLAMP
	147284-02-000	EA	NUT/SELF RETAINING - 5/16"-18
	148817-01-000	EA	WASHER/SPUR - LOCKING

COPYRIGHT © 2007 WINNEBAGO INDUSTRIES INC.

SEALANTS & FASTENERS GROUP (CONTINUED)

SCREWS

KEY	PART NUMBER	U/M	DESCRIPTION
	0G1208-12-170	EA	SCREW - 8-18 X 3/4 POH - BRIGHT WHITE
	0G3908-08-170	EA	SCREW - SF/DR - 8-18 X 1/2 PPH - BRIGHT WHITE
	0G3908-08-410	EA	SCREW - SF/DR - 8-18 X 1/2 PPH - PARCHMENT
	0G3908-12-250	EA	SCREW - SF/DR - 8-18 X 3/4 PPH - DARK GRAY
	0G3908-16-170	EA	SCREW - SF/DR - 8-18 X 1 PPH - BRIGHT WHITE
	0G3908-24-170	EA	SCREW - SF/DR - 8-18 X 1 1/2 PPH - BRIGHT WHITE
	0G3910-12-170	EA	SCREW - SF/DR - 10-16 X 3/4 PPH - BRIGHT WHITE
	0G3910-12-380	EA	SCREW - SF/DR - 10-16 X .75 PPH - CASHMERE
	0G3910-12-370	EA	SCREW - SF/DR - 10-16 X .75 PPH - RIVERSTONE
	0G3910-24-170	EA	SCREW - SF/DR - 10-16 X 1 1/2 PPH - BRIGHT WHITE
	0G3910-32-330	EA	SCREW - SF/DR - 10-16 X 2.00 PPH - PUTTY
	0G5508-08-380	EA	SCREW - SF/DR - 8-18 X .5 PWH - CASHMERE
	0G5508-08-370	EA	SCREW - SF/DR - 8-18 X .5 PWH - RIVERSTONE
	0G5508-12-320	EA	SCREW - SF/DR - 8-18 X 3/4 PWH - GLACIER
	0G5508-12-170	EA	SCREW - SF/DR - 8-18 X 3/4 PWH - BRIGHT WHITE
	0G5508-12-330	EA	SCREW - SF/DR - 8-18 X 3/4 PWH - PUTTY
	0G5508-16-370	EA	SCREW - SF/DR - 8-18 X 1 PWH - RIVERSTONE
	0G5508-16-330	EA	SCREW - SF/DR - 8-18 X 1 PWH - PUTTY
	0G5508-16-250	EA	SCREW - SF/DR - 8-18 X 1 PWH - VW DARK GRAY
	0G5508-16-380	EA	SCREW - SF/DR - 8-18 X 1 PWH - CASHMERE
	0G6008-16-170	EA	SCREW - SF/DR - 8-18 X 1 POH - BRIGHT WHITE
	0G6012-32-170	EA	SCREW - SF/DR - 12-14 X 2 POH - BRIGHT WHITE
	0G6710-08-170	EA	SCREW - 10-12 X 1/2 PPH - BRIGHT WHITE
	0G6710-12-170	EA	SCREW - 10-12 X 3/4 PPH - BRIGHT WHITE
	0G6806-16-170	EA	SCREW - 6-18 X 1 POH - BRIGHT WHITE
	0G6810-24-280	EA	SCREW - 10-12 X 1 1/2 POH - SOFT WHITE
	000C20-06-24T	EA	SCREW - 3/8-16 X 1 1/2 - FLAT SOCKET
	000C28-05-24D	EA	CAPSCREW/BUTTON HEAD - 5/16-18 X 1 1/2 - #8-BLK PHOSPHATE
	000G11-06-08B	EA	SCREW - 6-20 X 1/2 PPH - ZINC
	000G11-06-10B	EA	SCREW - 6-20 X 5/8 PPH - ZINC
	000G11-06-10J	EA	SCREW - 6-20 X 5/8 PPH - BRASS
	000G11-07-08B	EA	SCREW - 7-19 X 1/2 PPH - ZINC
	000G11-08-12B	EA	SCREW - 8-18 X 3/4 PPH - ZINC
	000G11-08-06B	EA	SCREW - 8-18 X 3/8 PPH - ZINC
	000G11-08-08T	EA	SCREW - 8-18 X 1/2 PPH - FLUOROCARBON COATING
	000G11-08-12B	EA	SCREW - 8-18 X 3/4 PPH - ZINC
	000G11-08-12P	EA	SCREW - 8-18 X 3/4 PPH - DARK BROWN
	000G11-08-12S	EA	SCREW - 8-18 X 3/4 PPH - OFF WHITE
	000G11-08-12T	EA	SCREW - 8-18 X 3/4 PPH - BLACK MAGNESIUM
	000G11-08-20B	EA	SCREW - 8-18 X 1 1/4 PPH - ZINC
	000G11-08-20G	EA	SCREW - 8-18 X 1 1/4 - ANTIQUE BRASS
	000G11-10-12D	EA	SCREW - 10-16 X 3/4 PPH - BLACK
	000G12-06-12J	EA	SCREW - 6-20 X .75 POH - BRASS
	000G12-06-08T	EA	SCREW - 6-20 X 1/2 POH - BLACK
	000G12-10-16F	EA	SCREW - 10-16 X 1 POH - STAINLESS STEEL
	000G13-05-10B	EA	SCREW - 5-12 X 5/8 PFH - ZINC
	000G13-06-08B	EA	SCREW - 6-20 X 1/2 PFH - ZINC
	000G13-06-08G	EA	SCREW - 6-20 X 1/2 PFH - ANTIQUE BRASS
	000G13-06-10B	EA	SCREW - 6-20 X 5/8 PFH - ZINC
	000G13-06-10G	EA	SCREW - 6-20 X 5/8 PFH - ANTIQUE BRASS
	000G13-06-16J	EA	SCREW - 6-20 X 1 PFH - BRASS
	000G13-06-169	EA	SCREW - SF/DR - 6-20 X 1 PFH - SILVER
	000G13-06-24J	EA	SCREW - 6-20 X 1 1/2 PFH - BRASS
	000G13-07-10H	EA	SCREW - 7-19 X 5/8 PFH - BLACK
	000G13-07-12B	EA	SCREW - 7-19 X 3/4 PFH - ZINC
	000G13-08-16B	EA	SCREW - 8-18 X 1 PFH - ZINC
	000G13-08-109	EA	SCREW - 8-18 X 5/8 PFH
	000G13-08-10B	EA	SCREW - 8-18 X 5/8 PFH - ZINC
	000G13-08-24B	EA	SCREW - 8-18 X 1 1/2 PFH - ZINC
	000G16-04-24B	EA	SCREW - MACHINE - 1/4-20 X 1 1/2 PPH
	000G18-08-12B	EA	SCREW - MACHINE - 8-32 X 3/4 PPH - ZINC
	000G18-08-16B	EA	SCREW - MACHINE - 8-32 X 1 PPH - ZINC
	000G18-08-22B	EA	SCREW - MACHINE - 8-32 X 1 3/8 PPH - ZINC
	000G18-08-24B	EA	SCREW - MACHINE - 8-32 X 1 1/2 PPH - ZINC

COPYRIGHT © 2007 WINNEBAGO INDUSTRIES INC.

SEALANTS & FASTENERS GROUP (CONTINUED)

SCREWS (CONTINUED)

KEY	PART NUMBER	U/M	DESCRIPTION
	000G19-10-10B	EA	SCREW - MACHINE - 10-32 X 5/8 - PPH - ZINC
	000G19-10-08B	EA	SCREW - MACHINE - 10-32 X 1/2 PPH - ZINC
	000G19-10-20B	EA	SCREW - MACHINE - 10-32 X 1 1/2 PPH - ZINC
	000G19-10-12F	EA	SCREW - MACHINE - 10-32 X 3/4 PPH - STAINLESS STEEL
	000G36-10-12T	EA	SCREW - 10-24X 3/4 PFH TYPE 23 - BLACK
	000G39-06-10T	EA	SCREW - SF/DR - 6-20 X 5/8 PPH - BLACK
	000G39-06-16T	EA	SCREW - SF/DR - 6-20 X 1 PPH - BLACK
	000G39-08-06B	EA	SCREW - SF/DR - 8-18 X 3/8 PPH - ZINC
	000G39-08-08B	EA	SCREW - SF/DR - 8-18 X 1/2 PPH - ZINC
	000G39-08-08S	EA	SCREW - SF/DR - 8-18 X 1/2 PPH - OFF WHITE
	000G39-08-08T	EA	SCREW - SF/DR - 8-18 X 1/2 PPH - BLACK
	000G39-08-12T	EA	SCREW - SF/DR - 8-18 X 3/4 PPH - BLACK
	000G39-08-16B	EA	SCREW - SF/DR - 8-18 X 1 PPH - ZINC
	000G39-08-16S	EA	SCREW - SF/DR - 8-18 X 1 PPH - OFF WHITE
	000G39-08-16T	EA	SCREW - SF/DR - 8-18 X 1 PPH - BLACK
	000G39-08-24B	EA	SCREW - SF/DR - 8-18 X 1 1/2 PPH - ZINC
	000G39-08-24S	EA	SCREW - SF/DR - 8-18 X 1 1/2 - OFF WHITE
	000G39-08-24T	EA	SCREW - SF/DR - 8-18 X 1 1/2 PPH - BLACK
	000G39-08-32B	EA	SCREW - SF/DR - 8-18 X 2 PPH - ZINC
	000G39-10-10B	EA	SCREW - SF/DR - 10-16 X 5/8 PPH - ZINC
	000G39-10-12B	EA	SCREW - SF/DR - 10-16 X 3/4 PPH - ZINC
	000G39-10-08B	EA	SCREW - SF/DR - 10-16 X 1/2 PPH - ZINC
	000G39-10-48T	EA	SCREW - SF/DR - 10-16 X 3 PPH - BLACK
	000G39-10-48B	EA	SCREW - SF/DR - 10-16 X 3 - PPH - ZINC
	000G39-10-129	EA	SCREW - SF/DR - 10-16 X 3/4 PPH - FLUOROCARBON SILVER
	000G39-10-169	EA	SCREW - SF/DR - 10-16 X 1 PPH - FLU0R0CARBON SILVER
	000G39-10-32B	EA	SCREW - SF/DR - 10-16 X 2 - PPH - ZINC
	000G39-10-28T	EA	SCREW - SF/DR - 10-16 X 1 3/4" PPH - BLACK
	000G39-10-24T	EA	SCREW - SF/DR - 10-16 X 1 1/2" PPH - BLACK
	000G39-10-20T	EA	SCREW - SF/DR - 10-16 X 1 1/4 PPH - BLACK
	000G39-10-20B	EA	SCREW - SF/DR - 10-16 X 1 1/4 PPH - ZINC
	000G42-04-24B	EA	SCREW - SF/DR - 1/4-14 X 1 1/2 - ZINC
	000G42-04-16B	EA	SCREW - SF/DR - 1/4-14 X 1 HWH - ZINC
	000G52-06-05B	EA	SCREW - MACHINE - 6-32 X 5/16 PTH - ZINC
	000G52-06-06B	EA	SCREW - MACHINE - 6-32 X 3/8 PTH - ZINC
	000G54-04-14B	EA	SCREW - 1/4-20 X 7/8 PTH - TYPE 23 - ZINC PLATED
	000G55-08-16T	EA	SCREW - SF/DR - 8-18 X 1 PWH - BLACK
	000G55-08-124	EA	SCREW - SF/DR - 8-18 X 3/4 PWH - ASH GRAY
	000G56-12-48B	EA	SCREW - WOOD - 12-11 X 3 POH - SPECIAL HARDENED
	000G60-08-22B	EA	SCREW - SF/DR - 8-18 X 1.38 POH - ZINC
	000G60-08-20F	EA	SCREW - SF/DR - 8-19X1.25 POH
	000G60-08-16E	EA	SCREW - SF/DR - 8-1 X 1 POH - CHROME
	000G60-10-16J	EA	SCREW - SF/DR - 10-16 X 1 POH - BRIGHT BRASS
	000G60-10-28T	EA	SCREW - SF/DR - 10-16 X 1 3/4 - BLACK
	000G60-10-209	EA	SCREW - SF/DR - 10-16 X 1 1/4 POH - SILVER STALGAARD
	000G60-10-20B	EA	SCREW - SF/DR - 10-16 X 1 1/4 POH - ZINC
	000G62-06-249	EA	SCREW - SF/DR - 8-18 X 1.5 PPH - SILVER
	000G62-08-24B	EA	SCREW - SF/DR - 8-18 X 1 1/2 PFH
	000G67-08-32B	EA	SCREW - 8-15 X 2 PPH - ZINC
	000G67-10-08B	EA	SCREW - 10-12 X 1/2 PPH - ZINC
	000G67-10-08S	EA	SCREW - 10-12 X 1/2 PPH - OFF WHITE
	000G67-10-10B	EA	SCREW - 10-12 X 5/8 PPH - ZINC - TYPE A
	000G67-10-10P	EA	SCREW - 10-12 X 5/8 PPH - DARK BROWN
	000G67-10-10S	EA	SCREW - 10-12 X 5/8 PPH - OFF WHITE
	000G67-10-10T	EA	SCREW - 10-12 X 5/8 PPH - BLACK
	000G67-10-12P	EA	SCREW - 10-12 X 3/4 PPH - DARK BROWN
	000G67-10-24B	EA	SCREW - 10-12 X 1 1/2 PPH - ZINC
	000G67-10-24S	EA	SCREW - 10-12 X 1 1/2 PPH - OFF WHITE
	000G67-10-32J	EA	SCREW-10-12X2 PPH - BRIGHT BRASS
	000G68-06-10J	EA	SCREW - 6-18 X 5/8 POH - BRASS
	000G68-06-12S	EA	SCREW - 6-18 X 3/4 POH
	000G68-06-12J	EA	SCREW - 6-18 X 3/4 POH - BRASS
	000G68-06-12B	EA	SCREW - 6-18 X 3/4 POH - ZINC & CLEAR
	029130-01-000	EA	SCREW - SNAP STUD - #8-16 X 5/8" LONG

COPYRIGHT © 2007 WINNEBAGO INDUSTRIES INC.

SEALANTS & FASTENERS GROUP (CONTINUED)

SCREWS (CONTINUED)

KEY	PART NUMBER	U/M	DESCRIPTION
	029130-03-000	EA	SCREW - SNAP STUD - #8-16 X 1" LONG
	049465-01-000	EA	SCREW - 10-16 PTH W/WASHER - DARK BROWN
	049465-03-000	EA	SCREW - 10-16 X 1 POH W/WASHER - OFF WHITE
	049465-13-000	EA	SCREW-10+16X1 PTH W/WASHER - *ASH GRAY
	049465-17-000	EA	SCREW - 10-16 X 1 POH W/WASHER - BRIGHT WHITE
	049465-22-000	EA	SCREW - 10-16 X 1 1/2 POH W/WASHER - SABLE
	054434-02-000	EA	SCREW - SF/DR - 10-16 X 2 - ZINC
	054434-03-000	EA	SCREW - SF/DR - 10-16 X 2 - PWH - ZINC
	075908-01-000	EA	SCREW - MACHINE - 10-32 X .56 PTH - EXTERNAL TOOTH - ZINC
	076790-01-000	EA	SCREW - 6-20 X 1 1/4 PPH - BLACK
	076790-05-000	EA	SCREW - 6-20 X 1/2 PPH - BLACK - THREAD CUTTING/WOOD
	083554-01-000	EA	SCREW - DRYWALL - 8 X 1 1/4
	083554-04-000	EA	SCREW - DRYWALL - 8 X 2 1/2
	087721-01-000	EA	SCREW - FLAT HEAD - TAPPING - 1/4" X 1 1/4" LONG - ZINC
	097974-01-000	EA	SCREW - PARTICLE BOARD - 7-9 X 3/4 PPH
	097974-02-000	EA	SCREW-PART BD 8-9X.75 PFH - BEIGE
	101618-01-000	EA	SCREW - 1/4-20 X 3/4 HEX - TAPPING - STALGARD TYPE F
	113563-01-01A	EA	SCREW - 8 X 5/8 LONG SHOULDER/WASHER HEAD
	118383-01-04A	EA	RETAINER/RECESSED - F/.22" SCREW - BRIGHT WHITE
	118383-01-09A	EA	RETAINER/RECESSED - F/.22" SCREW - GLACIER
	118383-01-12A	EA	RETAINER/RECESSED - F/.22" SCREW - RIVERSTONE
	118383-01-11A	EA	RETAINER/RECESSED - F/.22" SCREW - CASHMERE
	118383-01-10A	EA	RETAINER/RECESSED - F/.22" SCREW - STORM GRAY
	118383-02-10A	EA	RETAINER/RECESSED - F/.27" SCREW - RIVERSTONE
	118383-02-13A	EA	RETAINER/RECESSED - F/.27" SCREW - OFF WHITE
	118383-02-11A	EA	RETAINER/RECESSED - F/.27" SCREW - CASHMERE
	118383-03-09A	EA	RETAINER/RECESSED - F/.32" SCREW - GLACIER
	118383-04-04A	EA	CAP - F/RECESSED RETAINER - BRIGHT WHITE
	118383-04-12A	EA	CAP - F/RECESSED RETAINER - STORM GRAY
	118383-04-11A	EA	CAP - F/RECESSED RETAINER - CASHMERE
	118383-04-10A	EA	CAP - F/RECESSED RETAINER - RIVERSTONE
	118383-04-09A	EA	CAP - F/RECESSED RETAINER - GLACIER
	118383-04-13A	EA	CAP - F/RECESSED RETAINER - OFF WHITE
	134126-01-01A	EA	SCREW/NAIL - HEX HEAD - 3/4"
	140040-01-000	EA	SCREW - 1/4-20 X 1 - BUTTON HEAD/SOCKET - W/LOCTITE
	149753-01-02A	EA	RETAINER/RECESSED - F/.22" SCREW - BRIGHT WHITE
	149753-01-02A	EA	RETAINER/RECESSED - F/.22" SCREW - BRIGHT WHITE
	149753-01-01A	EA	RETAINER/RECESSED - F/.22" SCREW - BLACK
	149753-02-02A	EA	CAP - F/RECESSED RETAINER - BRIGHT WHITE
	149753-02-01A	EA	CAP - F/RECESSED RETAINER - BLACK
	154938-01-02A	EA	SCREW - SF/DR - 10-16 X 3/4 PPH - W/SELF SEAL - BLACK
	154938-01-01A	EA	SCREW - SF/DR - 10-16 X 3/4 PPH - W/SELF SEAL-BRIGHT WHITE
	154938-02-03A	EA	SCREW - SF/DR - 8-18 X 1 PFH - W/SELF SEAL - SILVER
	154938-02-01A	EA	SCREW - SF/DR - 8-18 X 1 PFH - W/SELF SEAL - BRIGHT WHITE

CLAMPS, CLIPS, GROMMETS, RIVETS & PLUGS

KEY	PART NUMBER	U/M	DESCRIPTION
	000H14-06-06R	EA	RIVET-MANDREL BLIND,3/16 AL - CHERRY BSP-66
	000H16-04-06R	EA	RIVET - POP ALUMINUM - 1/8 X .313 - .375
	000H16-06-10R	EA	RIVET - POP ALUMINUM - 3/16 X .501 - .625
	007161-01-000	EA	CLAMP - HOSE - SPRING TYPE - 1/2"
	008386-01-000	EA	GROMMET - SNAP - 3/8" DIAMETER - NYLON
	010495-01-000	EA	CLAMP - CABLE - 9/16"ID - BLACK
	010495-02-000	EA	CLAMP - CABLE - 3/8"ID - BLACK
	010495-04-000	EA	CLAMP - CABLE - 11/16"ID - WHITE
	010497-01-000	EA	CLAMP - CLOSED - 5/8"ID
	010497-02-000	EA	CLAMP - CLOSED - 1.5"ID
	010497-03-000	EA	CLAMP - CLOSED - 1"ID - CUSHIONED
	010497-04-000	EA	CLAMP - CLOSED - 1 5/8"ID
	010497-05-000	EA	CLAMP - CLOSED - 1/2"ID
	010497-07-000	EA	CLAMP - CLOSED - 3/8"ID
	010497-10-000	EA	CLAMP - CLOSED - 7/8"ID
	010499-01-000	EA	CLAMP - CLOSED - 3/8"ID
	016188-03-000	EA	GROMMET - LP LINE - 3/8"HOLE X 2 1/2"LONG - RUBBER

COPYRIGHT © 2007 WINNEBAGO INDUSTRIES INC.

SEALANTS & FASTENERS GROUP (CONTINUED)

CLAMPS, CLIPS, GROMMETS, RIVETS & PLUGS (CONTINUED)

KEY	PART NUMBER	U/M	DESCRIPTION
	016188-04-000	EA	GROMMET - LP LINE - 1/2"HOLE X 2 1/2"LONG - RUBBER
	016188-05-000	EA	GROMMET - LP LINE - 3/8"HOLE X 1 1/4"LONG - RUBBER
	016188-06-000	EA	GROMMET - LP LINE - 3/8"HOLE X 3 1/4"LONG - RUBBER
	016188-07-000	EA	GROMMET - L/P LINE - 1/2"HOLE X 3 1/4"LONG
	016188-08-000	EA	GROMMET - LP LINE - 1/2"HOLE X 1 1/4"LONG - RUBBER
	016188-09-000	EA	GROMMET - LP LINE - .68"HOLE X 1 1/4"LONG - RUBBER
	016188-10-000	EA	GROMMET - LP GAS - .68" X 2.5"
	023942-01-000	EA	GROMMET - RUBBER - 2"OD
	061420-04-000	EA	PLUG/PLASTIC - 1 1/4" DIAMETER
	061420-05-000	EA	PLUG/PLASTIC - 1 1/2" DIAMETER
	061420-09-000	EA	PLUG/PLASTIC - 1.00" DIAMETER
	061420-12-000	EA	PLUG/PLASTIC - 1.50" DIAMETER - RED
	061420-13-000	EA	PLUG/PLASTIC - 3/8" - FLUSH
	061420-14-000	EA	PLUG/PLASTIC - 7/8" DIAMETER - BLACK
	061420-15-000	EA	PLUG/PLASTIC - 2" DIAMETER - BLACK
	061420-16-000	EA	PLUG/PLASTIC - 2 1/8" DIAMETER - BLACK
	062401-01-000	EA	CLAMP - HOSE - WORMGEAR - .25" - 1"
	062401-02-000	EA	CLAMP - HOSE - WORMGEAR - 1.56" - 2.5" ID
	062401-03-000	EA	CLAMP - HOSE - WORMGEAR - .22" - 1" ID
	062401-04-000	EA	CLAMP - HOSE - WORMGEAR - .69" - 1.25" ID
	062401-05-000	EA	CLAMP - HOSE - WORMGEAR - 2" - 3" ID
	062401-06-000	EA	CLAMP - HOSE - WORMGEAR - .22" - .62" ID
	062401-09-000	EA	CLAMP - HOSE - WORMGEAR - 2.8" - 3.75" ID
	062401-11-000	EA	CLAMP - HOSE - WORMGEAR - 3.50" - 4.50" ID
	062401-13-000	EA	CLAMP - HOSE - WORMGEAR
	071015-01-000	EA	GROMMET - RUBBER - .5"ID X 1"OD-W/.38" GROOVE - BLACK
	071015-22-000	EA	GROMMET - RUBBER - .62"ID X 1.12"OD W/.19" GROOVE - BLACK
	071015-26-000	EA	GROMMET - RUBBER - 1.5"ID X 2.1"OD W/.06" GROOVE - BLACK
	071015-29-000	EA	GROMMET - RUBBER - .3"ID X 1.3"OD W/.12" GROOVE - BLACK
	071015-30-000	EA	GROMMET - RUBBER - .3"ID X .81"OD W/.12" GROOVE - BLACK
	071015-37-000	EA	GROMMET - .81 ID FITS .56 MTL
	071015-39-000	EA	GROMMET - .75 ID FITS .06 MTL
	071015-41-000	EA	GROMMET - .125 ID FITS .188 MTL
	071015-42-000	EA	GROMMET - .25 ID FITS .06 MTL
	075148-02-000	EA	CLAMP - GROUNDING - BRONZE SCREWS
	077955-01-000	EA	CLIP/J - 3/8" - VINYL COATED
	080734-02-000	EA	CLIP - WIRE NYLON
	081211-01-000	EA	PLUG - PLASTIC - .31"DIA - BLACK
	081211-03-000	EA	PLUG - PLASTIC - .50"DIAMETER - TRUSS HEAD - BLACK
	081211-04-000	EA	PLUG - PLASTIC - .46"DIAMETER - TRUSS HEAD - BLACK
	083609-01-000	EA	CLAMP - WIRE - DUAL - EQUAL DIAMETERS - 5/8"
	083610-01-000	EA	CLAMP - WIRE - DUAL - UNEQUAL DIAMETERS - 3/4" & 1 1/4"
	083610-02-000	EA	CLAMP - WIRE - DUAL - UNEQUAL DIAMETERS - 3/4" & 2"
	083610-03-000	EA	CLAMP - WIRE - DUAL - EQUAL DIAMETERS - 2"
	088756-01-000	EA	GROMMET - WEB - 1 1/8"ID
	089329-02-000	EA	CLIP - SPRING
	091952-01-000	EA	CLIP - GRIPPER - 1" - BLACK VINYL COATED
	091952-02-000	EA	CLIP - GRIPPER - 3/4" - BLACK VINYL COATED
	091952-03-000	EA	CLIP - GRIPPER - 1/2" - BLACK VINYL COATED
	094362-02-000	EA	CLIP - XMAS TREE - BINDER HEAD - .9" LONG/ANY COLOR
	094362-05-000	EA	CLIP - XMAS TREE - ROUND HEAD - 1.4" LONG/ANY COLOR
	113133-02-01A	EA	RIVET - POP - ALUMINUM - 3/16 X .252 - .504 - BLACK
	114208-03-000	EA	GROMMET - EDGE LINER - FITS 2 1/2"
	114208-05-000	EA	GROMMET - EDGE LINER - FITS 2"
	118626-01-02A	EA	RIVET/POP - ALUMINUM - 3/16 X .08 - .375
	118626-01-01A	EA	RIVET/POP - ALUMINUM - 3/16 X 1.2"(GRIP RANGE .1"-.4")
	118626-02-01A	EA	RIVET/POP - ALUMINUM - 3/16 X .500 - .750
	118626-03-01A	EA	RIVET/POP - STAINLESS STEEL - 3/16 X .500 - .750
	137014-01-02A	EA	GROMMET - CABLE - BROWN
	137014-01-01A	EA	GROMMET - CABLE - ALMOND
	137014-01-03A	EA	GROMMET - CABLE - BLACK
	139118-02-01A	EA	GROMMET - SCREW - PLASTIC
	155498-01-01A	EA	CLAMP - CLOSED - 7/8"ID - VINYL DIP/GALVONIZED - BLACK

COPYRIGHT © 2007 WINNEBAGO INDUSTRIES INC.

SEALANTS & FASTENERS GROUP (CONTINUED)

MISCELLANEOUS FASTENERS

KEY	PART NUMBER	U/M	DESCRIPTION
	008343-01-000	EA	TIE - WIRE - 6"
	008343-02-000	EA	TIE - WIRE - 14"
	008343-03-000	EA	TIE - WIRE - 7 1/2" - BLACK
	029094-04-000	YD	VELCRO TAPE/LOOP - 1"WIDE - W/ADHESIVE BACK - BLACK
	029096-03-000	YD	VELCRO TAPE/HOOK - 1"WIDE - BLACK
	029096-04-000	YD	VELCRO TAPE/HOOK - 1"WIDE - BLACK - W/ADHESIVE BACK (PSA)
	048394-02-000	YD	VELCRO TAPE - HOOK - ADHESIVE BACK - 3/4" WIDE - BEIGE
	085774-01-000	FT	FASTENER - DUAL LOCK - 1" WIDE - ADHESIVE BACK - BLACK
	085774-02-000	FT	FASTENER - DUAL HOOK - 1" WIDE - ADHESIVE BACK - BLACK
	088792-02-000	YD	VELCRO TAPE - LOOP - 3/4" - ADHESIVE BACK - BEIGE
	088792-04-000	YD	VELCRO TAPE - HOOK - 5/8" - NON-ADHESIVE BACK - WHITE
	088792-05-000	YD	VELCRO TAPE - LOOP - 5/8" - NON-ADHESIVE BACK - WHITE
	108046-01-000	EA	CABLE TIE - SCREW MOUNT 8"
	108046-02-000	EA	CABLE TIE - SCREW MOUNT 15"
	110943-01-000	FT	FELT STRIP - 3/8" - ADHESIVE BACK - BLACK - 75' PER ROLL
	110943-02-000	FT	FELT STRIP - 3/8" - ADHESIVE BACK - WHITE
	143059-03-02A	EA	PAD/FELT - 1/4” THICK - ADHESIVE BACK - WHITE

COPYRIGHT © 2007 WINNEBAGO INDUSTRIES INC.

WATER & SEWAGE GROUP

DRAINAGE SYSTEM

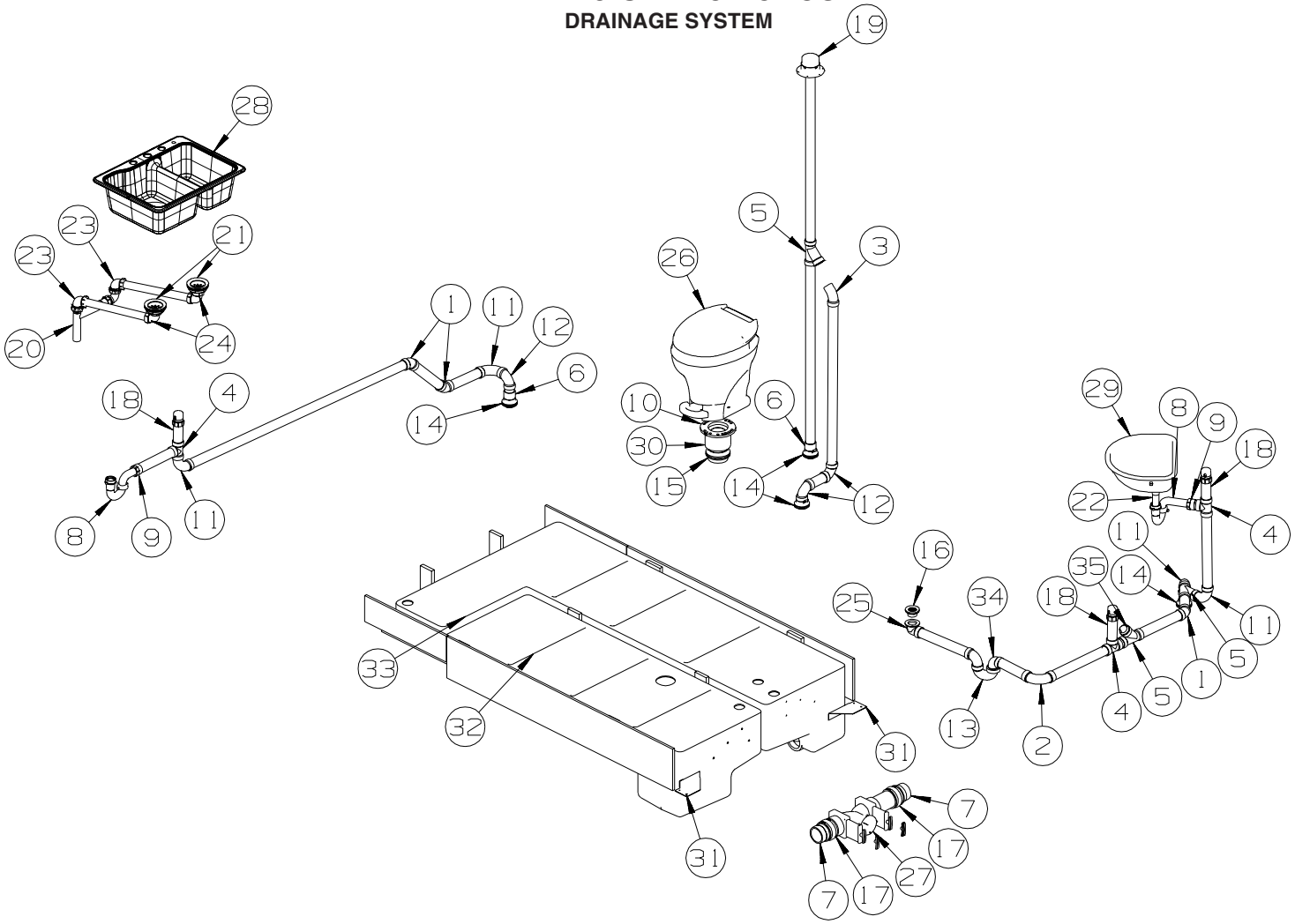

KEY	PART NUMBER	U/M	DESCRIPTION
1	010006-01-000	EA	ELBOW - 45 DEGREE - 1 1/2" HUB X HUB - PLASTIC
2	010008-01-000	EA	ELBOW - 90 DEGREE - 1 1/2" HUB X HUB - PLASTIC
3	010051-01-000	EA	ELBOW - 45 DEGREE - 1 1/2" SPIGOT X HUB - PLASTIC
4	010071-01-000	EA	TEE - SANITARY - 1 1/2" HUB X HUB X HUB - PLASTIC
5	010073-01-000	EA	WYE - 45 DEGREE - 1 1/2" HUB X HUB X HUB - PLASTIC
6	010115-01-000	EA	COUPLING - 1 1/2" HUB X HUB - PLASTIC
7	010129-03-000	EA	NIPPLE - 3" X 3" TOE - PLASTIC
8	107538-02-000	EA	P-TRAP - PLASTIC - 1 1/2" W/EXTENSION ARM
8	011071-01-000	EA	P-TRAP - 1 1/2" - CSA - PLASTIC - CANADIAN
9	152146-01-000	EA	CONNECTOR - 1 1/2"P X 1 1/2"MPT
10	024676-01-000	EA	FLANGE/CLOSET - 4" X 3" - BLACK PLASTIC
11	033761-01-000	EA	ELBOW - 90 DEGREE - TURN - 1 1/2" HUB X 1 1/2" SPIGOT
12	034250-01-000	EA	ELBOW - 90 DEGREE - LONG TURN - 1 1/2" HUB X HUB - ABS
13	037763-01-000	EA	P-TRAP - PLASTIC - 1 1/2 HXH W/UNION
14	061607-01-000	EA	GROMMET - HOLDING TANK - 1 1/2" NPS
15	061607-02-000	EA	GROMMET - HOLDING TANK - 3" NPS
16	066440-01-000	EA	STRAINER - SHOWER DRAIN - W/RUBBER WASHER
16	127440-02-01A	EA	WASHER - RUBBER - 1.8" X .1"
17	078406-01-000	EA	COUPLER - 3" X 3" W/CLAMPS - RUBBER
18	079968-01-000	EA	VENT - MECHANICAL/TRAP ARM - ANTI-SIPHON-2" X 7.3" PLASTIC
19	083558-03-000	EA	VENT - W/COVER - F/PLUMBING STACK - OFF WHITE
20	011091-02-000	EA	WASTE - CONTINUOUS - DOUBLE SINK
21	092303-01-000	EA	STRAINER - W/BASKET - GALLEY SINK - 4" OD
21	127440-02-01A	EA	WASHER - RUBBER - 1.8" X .1"
			FROM: 00-00-00 THRU: 01-16-06
22	106116-01-02A	EA	STRAINER/PLASTIC - STOPPER/TAILPIECE/GASKET & NUT-LAVATORY
22	106116-02-01A	EA	GASKET - STRAINER
23	125569-01-000	EA	ELBOW - 1 1/2" X 90 DEGREE - DOUBLE SLIP
24	126588-02-000	EA	ARM - WASTE - 1 1/2" X 20" - FEMALE

COPYRIGHT © 2007 WINNEBAGO INDUSTRIES INC.

WATER & SEWAGE GROUP (CONTINUED)

DRAINAGE SYSTEM (CONTINUED)

KEY	PART NUMBER	U/M	DESCRIPTION
25	131486-01-000	EA	ELBOW - DRAIN 1 1/2" - LOW PROFILE - TUB DRAIN
25	130403-01-000	EA	NUT - SLIP - W/WINGS 1 1/2"
26*	147421-01-01A	EA	TOILET/AQUA MAGIC 5 (HIGH) FOOTFLUSH - W/SPRAY - WHITE
27	136143-01-000	EA	VALVE - DUAL - 3" X 3"
27	139513-01-000	EA	HOSE - SEWER - 3" X 10' - W/ADAPTER
	062416-01-000	EA	ADAPTER - SEWER HOSE TO 3" PIPE
28	148870-01-01A	EA	SINK/DOUBLE - LRG/SML BASIN - 25" X 19" X 7"
29	142285-01-01A	EA	SINK - LAVATORY
30	143289-01-000	EA	ADAPTER - DUCT - 5"
31	139004-01-02B	EA	BRACKET/TIEDOWN - WATER TANK - E-COATED
32	133436-01-700	EA	TANK - HOLDING - 41 GALLON - W/3" NIPPLE - W/O FITTINGS
	010129-03-000	EA	NIPPLE - 3" X 3" TOE - PLASTIC
	010232-01-000	EA	FITTING - SPINWELD - PLASTIC 3FPT
	049032-01-000	EA	PATCH - SPINWELD - 3/8" - PLASTIC
33	142301-01-700	EA	TANK - HOLDING - 40 GALLON - W/3" NIPPLE OUTLET
	010129-03-000	EA	NIPPLE - 3" X 3" TOE - PLASTIC
	049032-01-000	EA	PATCH - SPINWELD - 3/8" - PLASTIC
34	010009-01-000	EA	ELBOW - 90 DEGREE - 1/4 BEND - 1 1/2" - PLASTIC
35	010166-01-000	EA	PLUG/THREADED - 1 1/4"MPT - PLASTIC - BLACK - UL
35	010122-01-000	EA	BUSHING/PLASTIC - REDUCER - 1 1/2"SMTH X 1 1/4"THD - BLACK

***COMPONENT PARTS LISTED LATER IN THIS GROUP**

COPYRIGHT © 2007 WINNEBAGO INDUSTRIES INC.

WATER & SEWAGE GROUP (CONTINUED)

COMPONENT PARTS FOR DRAINAGE SYSTEM

096927-01-02A

KEY	PART NUMBER	U/M	DESCRIPTION	VENDOR NO.
	096927-01-700	EA	SINK STOPPER	M9801
	096927-01-701	EA	TAILPIECE-DRAIN-LAVATORY	M9802

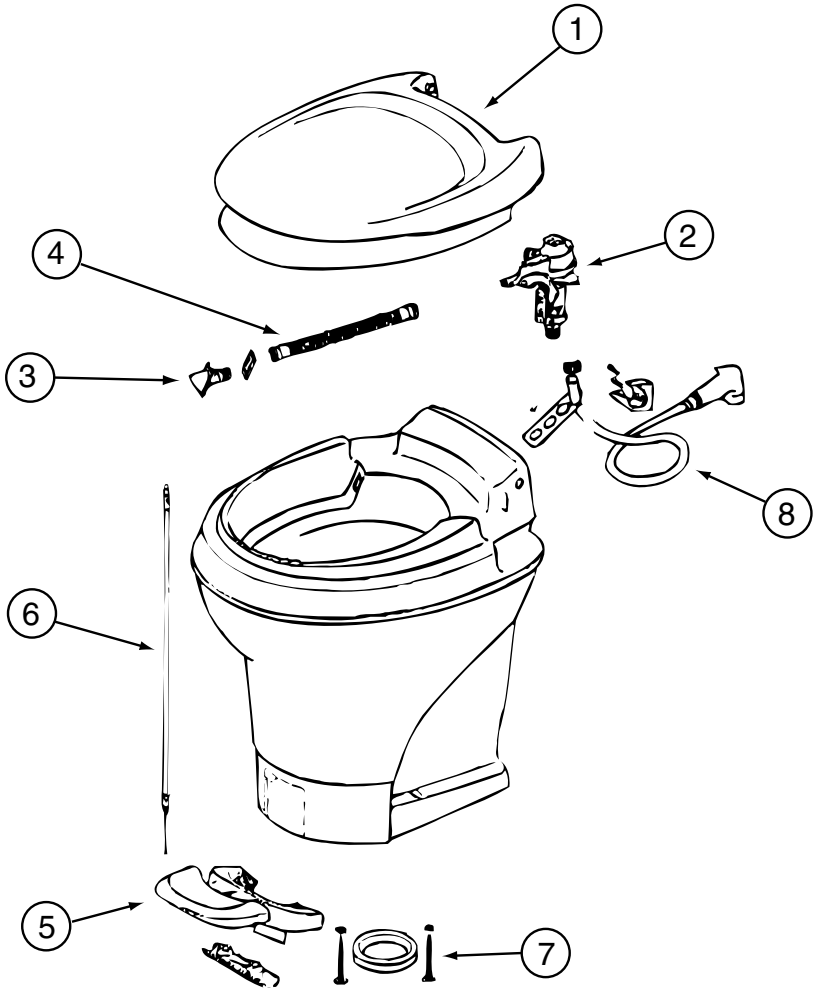

147421-01-01A, 147421-02-01A

KEY	PART NUMBER	U/M	DESCRIPTION	VENDOR NO.
1	147421-01-700	EA	SEAT & COVER ASSEMBLY(WHT)	31703
2	147421-01-701	EA	WATER MODULE ASSEMBLY	31705
3	147421-01-702	EA	NOZZLE ASSEMBLY	31706
4	147421-01-703	EA	LINK - WATER MODULE	31621
5	147421-01-704	EA	PEDAL - WHITE	31709
6	147421-01-705	EA	FOOT CABLE	31711
7	063740-01-706	EA	BOLT PACKAGE-FLOOR FLANGE	12524 THETFORD
8	132389-01-708	EA	HAND SPRAY KIT	19289
	147421-01-706	EA	SEAL - BLADE	31708
	147421-01-707	EA	CAP (UNIVERSAL BOLT) - WHITE	31713

COPYRIGHT © 2007 WINNEBAGO INDUSTRIES INC.

WATER & SEWAGE GROUP (CONTINUED)

WATER SYSTEM

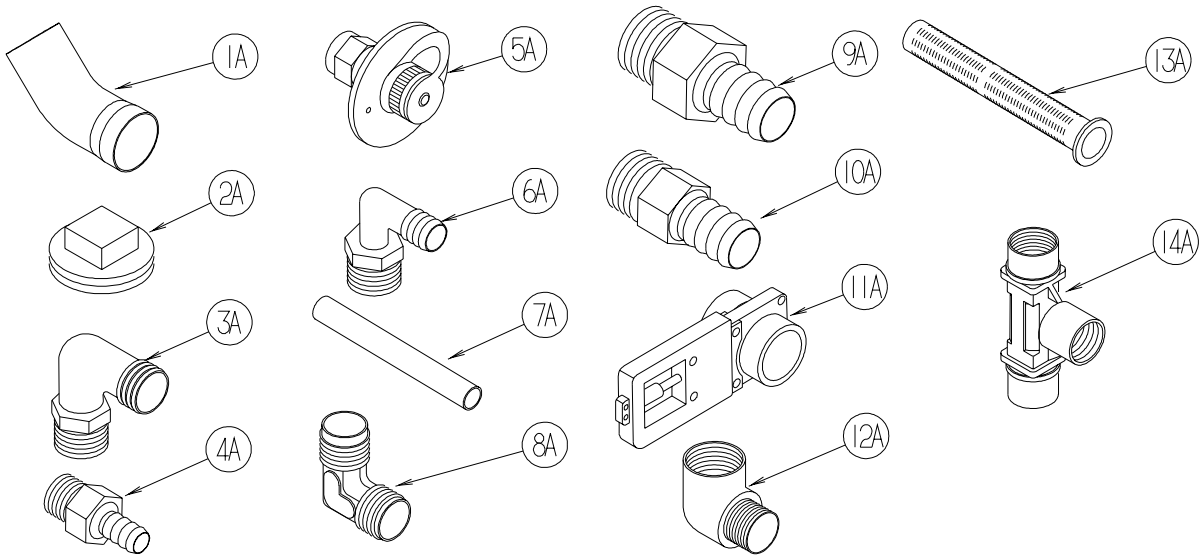

KEY	PART NUMBER	U/M	DESCRIPTION
1A	010009-01-000	EA	ELBOW - 90 DEGREE - 1/4 BEND - 1 1/2" PLASTIC
2A	010166-01-000	EA	PLUG/THREADED - 1 1/4"MPT - PLASTIC - BLACK - UL
3A	010219-01-000	EA	ELBOW - 1 1/4 MPT X 1 1/4 BARB - WATER FILL - PLASTIC
4A	010224-01-000	EA	ADAPTER - HOSE TO PIPE - 3/8 MPT X 3/8 BARB - PLASTIC
5A	010230-06-000	EA	FILL - CITY WATER - W/CHECK VALVE - MPT - BRUSHED ALUM
6A	035539-01-000	EA	ELBOW - 3/8 MPT X 3/8 BARB - PLASTIC
7A	039800-04-000	FT	TUBING - POLYBUTYL - 1/4"OD
7A	074462-02-000	FT	TUBING - VINYL - 3/8 ID X 20' - CLEAR
7A	112176-01-000	FT	TUBING - VINYL - REINFORCED - 1/2" ID
7A	124188-01-000	FT	TUBING - PEX - 1/2" ID X 20' - BLUE(COLD)
7A	124188-02-000	FT	TUBING - PEX - 1/2" ID X 20' - RED(HOT)
8A	039808-03-000	EA	ELBOW - 1/2" MPT X 1/2" MPT - PLASTIC
9A	044927-01-000	EA	ADAPTER - HOSE TO PIPE-1 1/4 MPTX1 1/4 BARB-BLACK PLASTIC
10A	044927-02-000	EA	ADAPTER - REDUCING - 1" MPT X 1.3" BARB - PLASTIC
11A	062421-03-000	EA	VALVE/DUMP W/O HANDLE - 1 1/2" X 1 1/2" HUB
	062421-05-000	EA	CABLE/ROD - F/DUMP VALVE - W/HANDLE - 48"
	062421-07-000	EA	CABLE/ROD - F/DUMP VALVE - W/HANDLE - 144"
	062421-08-000	EA	CABLE/ROD - F/DUMP VALVE - W/HANDLE - 108"
12A	065318-02-000	EA	ELBOW - 90 DEGREE - 3/8" MPT TO 3/8" FPT
13A	077954-02-000	EA	FILTER - WATER TANK - W/SCREEN IN TANK
14A	039798-01-000	EA	TEE - 1/2"MPT X 1/2"MPT X 1/2"MPT - PLASTIC

COPYRIGHT © 2007 WINNEBAGO INDUSTRIES INC.

WATER & SEWAGE GROUP (CONTINUED)

WATER SYSTEM (CONTINUED)

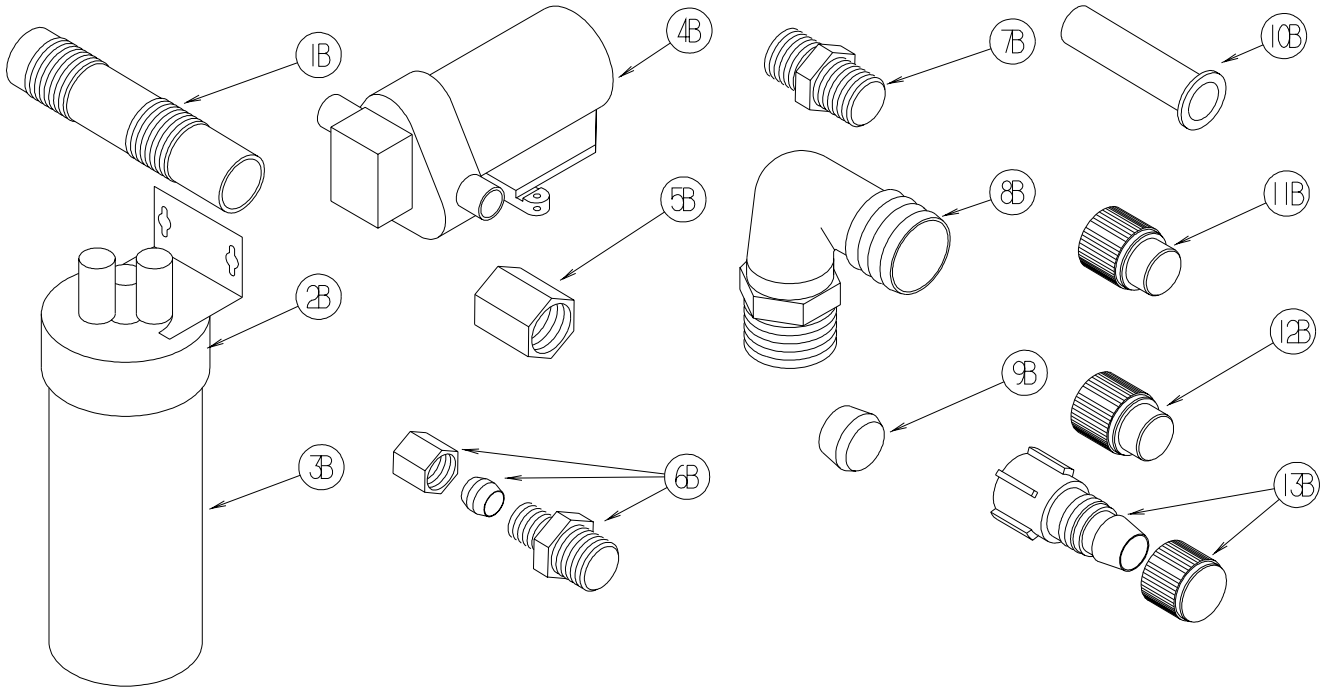

KEY	PART NUMBER	U/M	DESCRIPTION
1B	079381-01-000	FT	TUBING - RIBBED FLEXIBLE - WATER FILL - 1.4" ID
2B	087200-01-000	EA	FILTER-WATER PURIFCATION, EVERPURE QC2-AC
3B	087200-02-000	EA	CARTRIDGE-WATER FILTER,AC - EVERPURE 9601-11
4B*	098607-01-000	EA	PUMP - WATER - W/.5" MPT FITTING - FLOW 2.8 GPM
5B	101814-01-000	EA	COUPLING - FEMALE - 1/2" X 1/2" FPT - GRAY
6B	103798-01-000	EA	CONNECTOR - 1/4 OD X 3/8 MPT
7B	110438-02-000	EA	VALVE - CHECK - BRASS - 1/2 MPT X 1/2 MPT
8B	111223-02-000	EA	ELBOW - 1/2" MPT X 3/8" BARB - PLASTIC
8B	111223-03-000	EA	ELBOW - 3/4" MPT X 1/2" BARB - PLASTIC
8B	111223-04-000	EA	ELBOW - 1/2" MPT X 1/2" BARB - PLASTIC
9B	111888-01-000	EA	FERRULE - PLASTIC - .250 ID X .375 OD
10B	111888-02-000	EA	INSERT - BRASS - 1/4 COMP
11B	113697-01-000	EA	CAP - 3/8"P
12B	114427-01-000	EA	CAP - 1/2"P
13B	114427-02-000	EA	PLUG - W/COMP NUT - 1/2" PLASTIC PIPE/1/2" FLAIR-IT

COPYRIGHT © 2007 WINNEBAGO INDUSTRIES INC.

WATER & SEWAGE GROUP (CONTINUED)

WATER SYSTEM (CONTINUED)

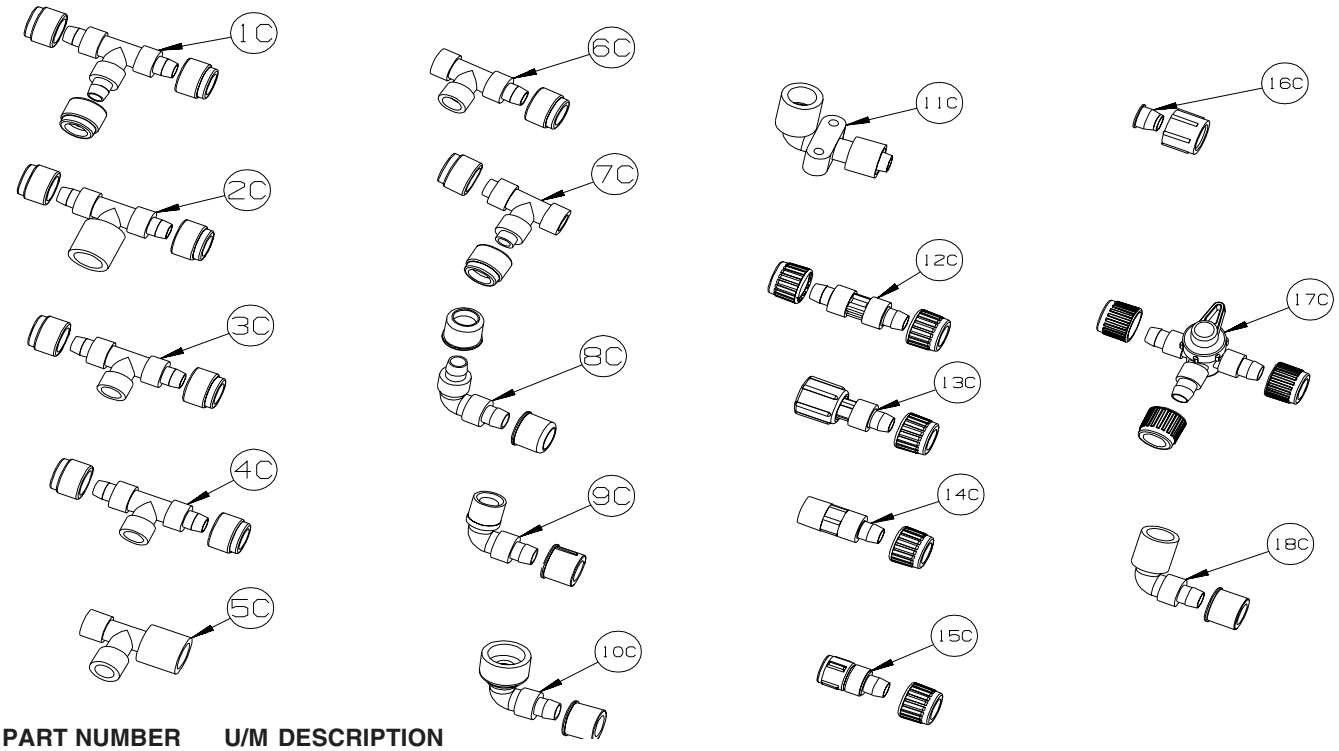

KEY	PART NUMBER	U/M	DESCRIPTION
1C	114428-01-000	EA	TEE - 1/2"P X 1/2"P X 1/2"P
2C	114428-02-000	EA	TEE - SWIVEL - 1/2"P X 1/2"P X 1/2"FPT
3C	114428-03-000	EA	TEE - 1/2"P X 1/2"P X 1/2"MPT
4C	114428-04-000	EA	TEE - 1/2"P X 1/2"P X 1/8"FPT
5C	114428-05-000	EA	TEE - 1/2" SWIVEL X 1/2" MPT X 1/2" MPT
6C	114428-06-000	EA	TEE - 1/2" P X 1/2" MPT X 1/2" MPT
7C	114428-07-000	EA	TEE - 1/2" P X 1/2" MPT X 1/2" P
8C	114429-01-000	EA	ELBOW - 1/2"P X 1/2"P
9C	114429-02-000	EA	ELBOW - 1/2"P X 1/2"MPT
9C	114429-04-000	EA	ELBOW - 1/2"P X 3/8"MPT
9C	114429-05-000	EA	ELBOW - 1/2"P X 3/4"MPT
9C	114429-10-000	EA	ELBOW - SWIVEL - 1/2"MPT X 1/2"FPT
10C	114429-06-000	EA	ELBOW - SWIVEL - 1/2"P X 3/4"FPT
10C	114429-08-000	EA	ELBOW - SWIVEL - 1/2"P X 1/2"FPT
11C	114429-09-000	EA	ELBOW - 1/2"P X 1/2"FPT DROP EAR
12C	114430-01-000	EA	ADAPTER - 1/2"P X 1/2"P
13C	114430-02-000	EA	ADAPTER - SWIVEL - 1/2"P X 1/2"FPT
13C	114430-04-000	EA	ADAPTER - SWIVEL - 1/2"P X 3/8"MPT
14C	114430-03-000	EA	ADAPTER - 1/2"P X 1/2"MPT
15C	114430-06-000	EA	ADAPTER - 1/2"P X 3/8"FPT
15C	114430-09-000	EA	ADAPTER - 1/2"P X 1/2"FPT
16C	114430-10-000	EA	ADAPTER - NUT - PIPE CONNECTION - 1/2"
17C	114431-01-000	EA	VALVE - 180 DEGREE/CENTER DRAIN - 1/2"P - THREE WAY
18C	114429-11-000	EA	ELBOW - 1/2"P X 1/2"FPT

COPYRIGHT © 2007 WINNEBAGO INDUSTRIES INC.

WATER & SEWAGE GROUP (CONTINUED)

WATER SYSTEM (CONTINUED)

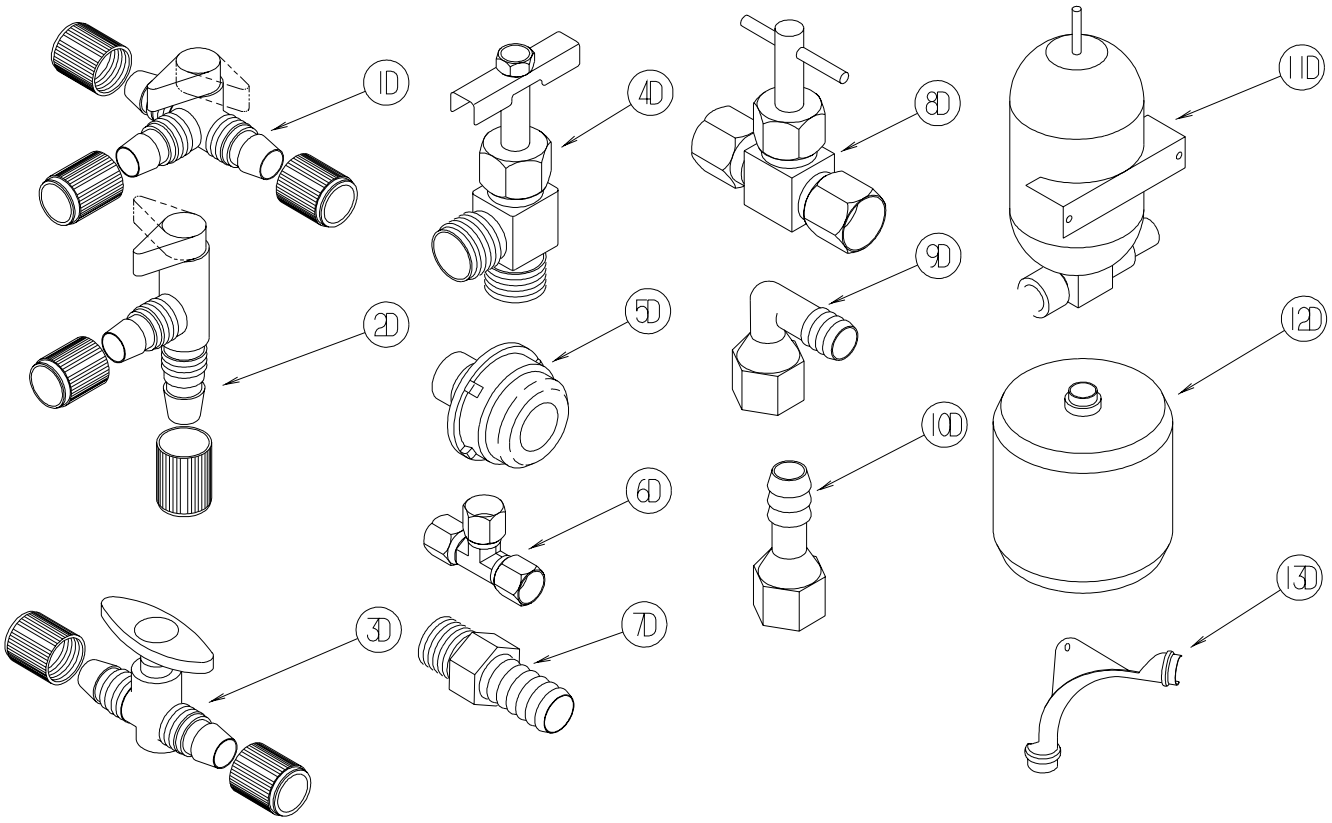

KEY	PART NUMBER	U/M	DESCRIPTION
1D	114431-02-000	EA	VALVE - WATER BYPASS - 1/2"P - THREE WAY (WATER HEATER)
2D	114431-03-000	EA	VALVE - 90 DEGREE DRAIN - 1/2"P
3D	114431-04-000	EA	VALVE - “INLINE SHUT-OFF” - 1/2"P
4D	114431-05-000	EA	VALVE - NEEDLE - 1/8" MPT X 1/4" COMPRESSION (ICE MAKER)
5D	114966-01-000	EA	FILTER - IN LINE - TWIST ON - 1/2" - NOT ILLUSTRATED FROM: 00-00-00 THRU: 09-26-04
5D	152925-01-01A	EA	FILTER - IN LINE - TWIST ON - 1/2" - BLACK - NOT ILLUSTRATED FROM: 09-27-04 THRU: 99-99-99
6D	118423-01-000	EA	FITTING - BRASS-TEE - 1/4C X 1/4C X 1/4C
7D	118809-01-000	EA	ADAPTER - 1/2" MPT X 3/8" BARB - PLASTIC
7D	118809-02-000	EA	ADAPTER - 1/2" MPT X 1/2" BARB - PLASTIC
8D	120868-01-000	EA	VALVE - NEEDLE - 1/4" COMPRESSION X 1/4" COMPRESSION
9D	123150-01-000	EA	ELBOW - 1/2 FPT X 1/2 BARB - SWIVEL
10D	123152-01-000	EA	ADAPTER - 1/2 FPT X 1/2 BARB - SWIVEL
11D	123243-01-000	EA	TANK - ACCUMULATOR - 24 OZ
12D	123317-01-000	EA	TANK - ACCUMULATOR - 2 GALLON
13D	124184-01-000	EA	SUPPORT - WATER LINE - BEND

COPYRIGHT © 2007 WINNEBAGO INDUSTRIES INC.

WATER & SEWAGE GROUP (CONTINUED)

WATER SYSTEM (CONTINUED)

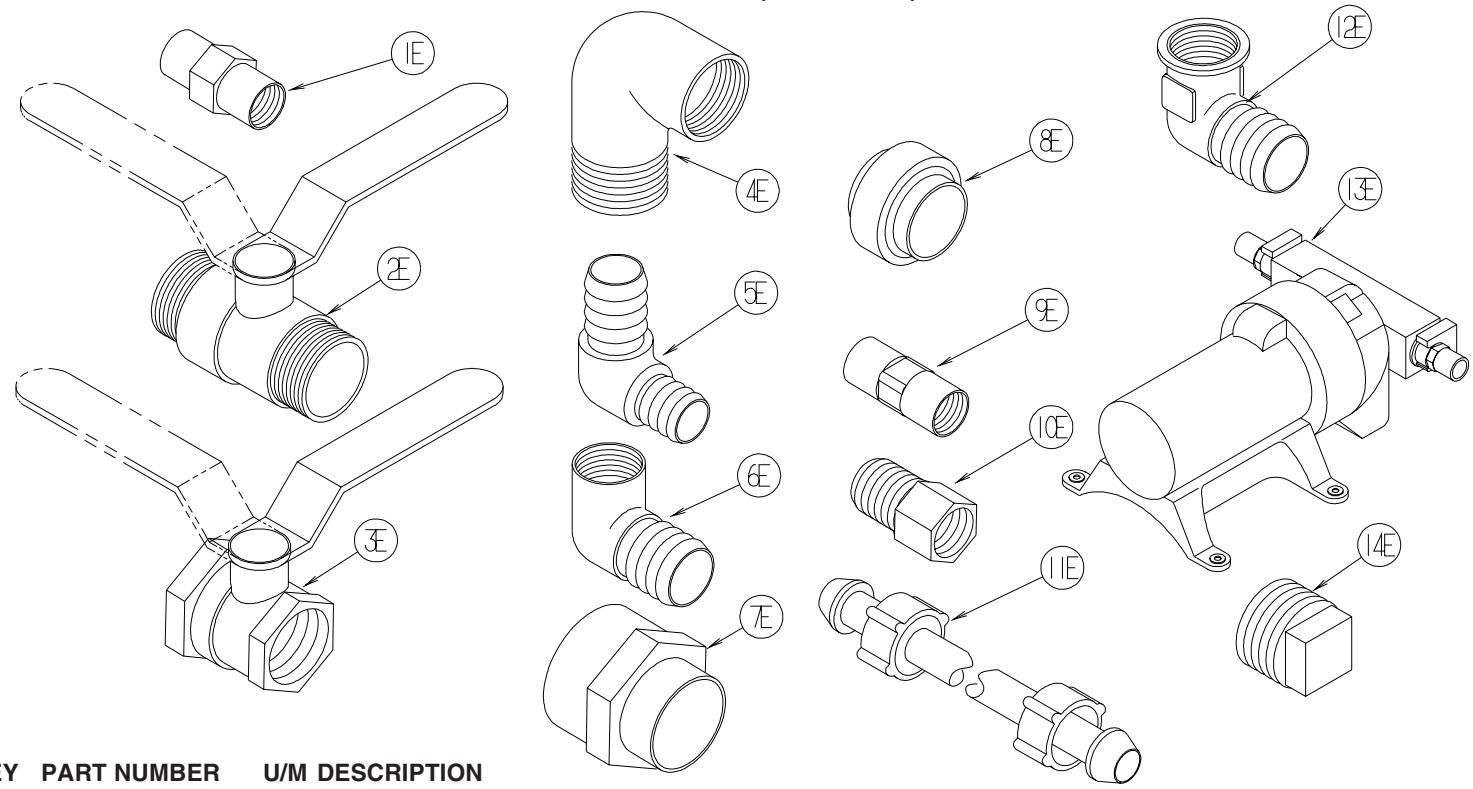

KEY	PART NUMBER	U/M	DESCRIPTION
1E	132148-01-000	EA	CONNECTOR - 1/2” X 1/2”MPT - BRASS
2E	132483-01-000	EA	VALVE/BALL - 1" - THREADED ENDS
3E	132483-02-000	EA	VALVE/BALL - 1/2" - BRASS - FPT
4E	132484-01-000	EA	ELBOW - 90 DEGREE - 1MPT X 1FPT - PLASTIC
5E	132781-01-000	EA	ELBOW - 1.3" BARB X 1.3" BARB - 90 DEGREE - PLASTIC
6E	132782-01-000	EA	ELBOW - 1"FPT X 1.3" BARB - 90 DEGREE - PLASTIC
7E	133835-01-000	EA	ADAPTER - REDUCING - 1 1/2" X 1 1/4"
8E	133889-01-000	EA	UNION - 1 1/2 DOUBLE SLIP - PVC
9E	135386-01-000	EA	NIPPLE - 1/2"
10E	136333-01-000	EA	ADAPTER - BRASS - 1/2"MPT X 1/2"FPT
11E	140821-01-000	EA	TUBE - WATER SUPPLY - 3/8" X 24"
11E	140821-02-000	EA	TUBE - WATER SUPPLY - 3/8" X 30"
11E	140821-03-000	EA	TUBE - WATER SUPPLY - 3/8" X 36"
11E	140821-04-000	EA	TUBE - WATER SUPPLY - 3/8" X 48"
11E	140821-05-000	EA	TUBE - WATER SUPPLY - 3/8" X 54"
11E	140821-06-000	EA	TUBE - WATER SUPPLY - 3/8" X 60"
11E	140821-07-000	EA	TUBE - WATER SUPPLY - 3/8" X 72"
11E	140821-08-000	EA	TUBE - WATER SUPPLY - 1/2" X 24"
11E	140821-09-000	EA	TUBE - WATER SUPPLY - 1/2" X 36"
11E	140821-10-000	EA	TUBE - WATER SUPPLY - 1/2" X 48"
12E	142812-01-000	EA	ELBOW - BRASS - 1/2"MPT X 1/2"FPT
13E*	144215-01-000	EA	PUMP - WATER - 5.7 GPM - W/1/2" MPT
*	144215-02-000	EA	STRAINER - WATER PUMP
14E	145609-01-000	EA	PLUG - BRASS - 1/2" MPT/HEX HEAD

***COMPONENT PARTS LISTED LATER IN THIS GROUP**

COPYRIGHT © 2007 WINNEBAGO INDUSTRIES INC.

WATER & SEWAGE GROUP (CONTINUED)

WATER SYSTEM (CONTINUED)

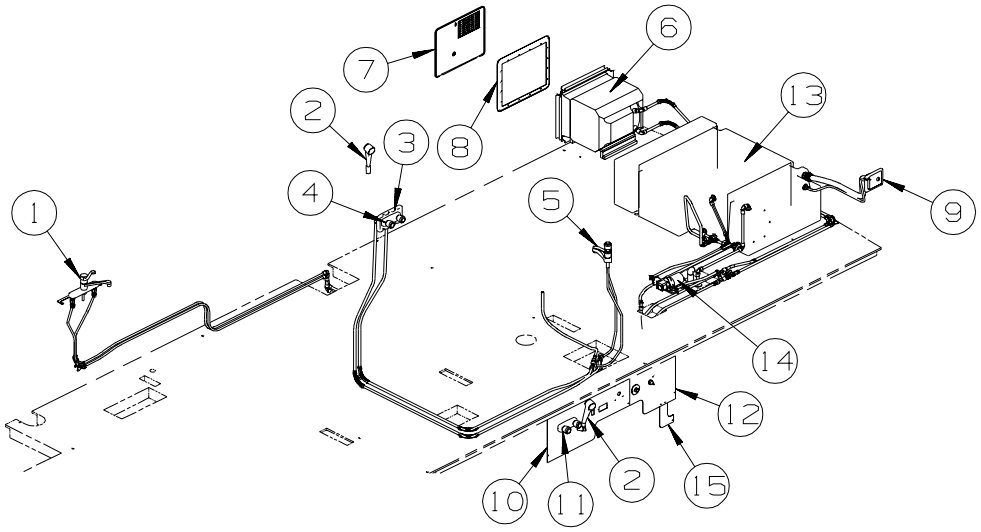

KEY	PART NUMBER	U/M	DESCRIPTION
1	131383-01-02A	EA	SHOWER HEAD - W/60" HOSE & BRACKET - WHITE
2	149164-01-01A	EA	FAUCET - GALLEY - SINGLE CONTROL - CHROME
3	075606-03-000	EA	PANEL - FAUCET SHOWER - SOFT WHITE
4	075241-07-000	EA	FAUCET - SHOWER CONTROL - CHROME
5	148886-01-01A	EA	FAUCET - LAVATORY/DUAL CONTROL/4" CENTER - CHROME
6*	051391-03-000	EA	WATER HEATER G6A-8E ELECTRONIC IGNITION
6*	145541-02-000	EA	WATER HEATER-6 GAL-GAS/ELEC/120'-REM IGN-W/HEAT EXC-4E-WTR HTR-6GAL/110/LP/MTR/AUTO
7	052009-06-000	EA	DOOR - WATER HEATER - BRIGHT WHITE - 18" X 14.6"
	076767-03-000	EA	CABLE - STAINLESS STEEL - 18.5"
8	152239-01-01A	EA	FLANGE/MOUNTING/RECESSED - 19.3" X 15.8" - BRIGHT WHITE
9	137169-01-01A	EA	WATER FILL/GRAVITY - W/DOOR - W/O LOCK - BRIGHT WHITE
10	148582-01-12B	EA	PANEL - SERVICE CENTER - BRIGHT WHITE
11*	075241-06-000	EA	FAUCET/SHOWER -.5"MPT W/1.9" INLET PIPES- EXTERIOR/BRT WHT
12	139549-02-12B	EA	PANEL - SERVICE CENTER - BRIGHT WHITE
13	148137-03-01A	EA	TANK - WATER - 70 GALLON - W/FITTINGS
	042989-04-000	EA	FITTING - SPINWELD - 3/8"FPT - PLASTIC
	042989-08-000	EA	FITTING - SPINWELD - 1"FPT - PLASTIC
	148137-01-01A	EA	TANK - WATER - 70 GALLON - W/O FITTINGS
14*	098607-01-000	EA	PUMP - WATER - W/.5" MPT FITTING - FLOW 2.8 GPM
			FROM: 00-00-00 THRU: 06-21-06
14	160702-01-000	EA	PUMP - WATER - 3.0 GPM - W/1/2" MPT
			FROM: 06-22-06 THRU: 99-99-99
15	159583-01-12B	EA	PANEL - SERVICE CENTER - BRIGHT WHITE

***COMPONENT PARTS LISTED LATER IN THIS GROUP**

COPYRIGHT © 2007 WINNEBAGO INDUSTRIES INC.

WATER & SEWAGE GROUP (CONTINUED)

COMPONENT PARTS FOR WATER SYSTEM

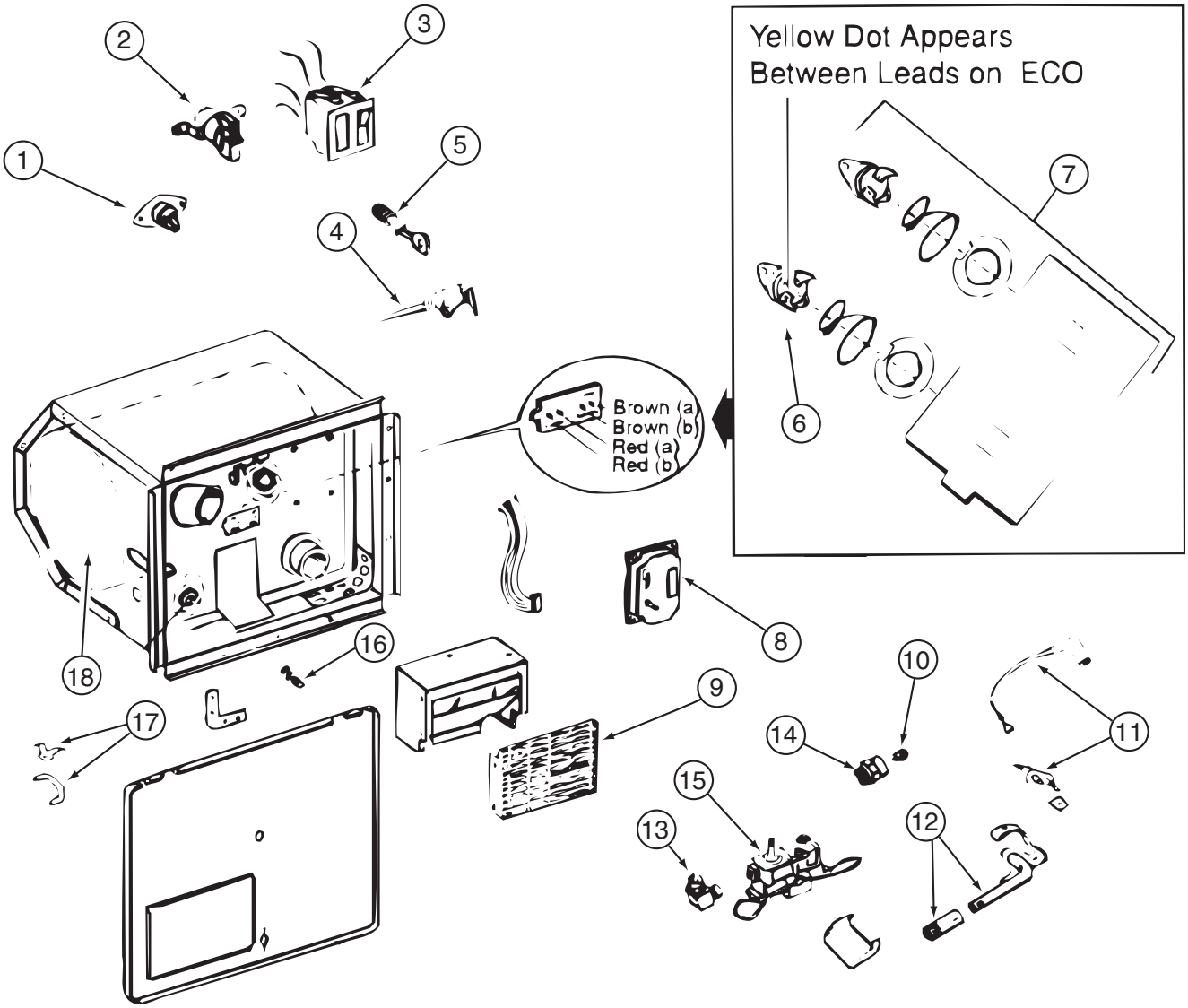

051391-03-000

KEY	PART NUMBER	U/M	DESCRIPTION	VENDOR NO.
3	051393-01-701	EA	SWITCH - REMOTE - W/LIGHT	91959
4	051391-01-704	EA	VALVE-RELIEF, 1/2" FITTING	91604
5	051391-01-705	EA	FASTENER-CAMLOCK	92609
6	051391-04-701	EA	THERMOSTAT 12V DC-120 PRESET	91470
7	051393-01-721	EA	THERMOSTAT W/ECO, 140 FRT MT	91447
9	051391-04-707	EA	KIT-EXHAUST, (FLUE & GASKET)	90960
10	051391-01-710	EA	ORIFICE-MAIN BURNER	92742
12	051391-04-703	EA	BURNER-MAIN/ELECTRONIC IG	91638
13	051391-01-714	EA	FITTING-ELBOW 45,3/8F X 3/8	MPT 1044
14	051391-03-700	EA	HOLDER-ORIFICE	91563
16	051391-01-715	EA	PLUG-DRAIN, 1 EA = 2 PER PKG	91857
17	051391-01-700	EA	HINGE KIT, (PIN & CLIP)	92568&92559
18	051391-04-706	EA	TANK-G6A-4E/6E/7E/8E-FRT.MT	91641
	051391-01-717	EA	GRILLE-WATER HEATER DOOR	92640
	051393-01-723	EA	SWITCH - THERMAL CUTOUT 2/PK	93853 NOW 93866
	051393-01-724	EA	BOARD-CIRCUIT,SPADE TERMINAL	93865
	051393-01-725	EA	ELECTRODE-SGL SPADE CONNECT.	93868
	051393-01-726	EA	VALVE/SOLENOID - W/O BRACKET	93870
	111129-01-711	EA	BRACKET-CORNER, SET OF FOUR	91928

CONTACT WINNEBAGO PARTS SALES FOR UNLISTED COMPONENT(S)

COPYRIGHT © 2007 WINNEBAGO INDUSTRIES INC.

WATER & SEWAGE GROUP (CONTINUED)

COMPONENT PARTS FOR WATER SYSTEM (CONTINUED)

075240-05-000

KEY	PART NUMBER	U/M	DESCRIPTION	VENDOR NO.
	075240-05-700	EA	CARTRIDGE - WASHERLESS	9-P42

075241-04-000, 075241-05-000, 075241-06-000

KEY	PART NUMBER	U/M	DESCRIPTION	VENDOR NO.
	075240-05-700	EA	CARTRIDGE - WASHERLESS	9-P42

098607-01-000

KEY	PART NUMBER	U/M	DESCRIPTION	VENDOR NO.
	098607-01-702	EA	DIAPHRAGM/DRIVE ASSEMBLY KIT	94-238-04
	098607-01-703	EA	VALVE KIT	94-232-00
	098607-01-705	EA	VALVE-CHECK, KIT	94-237-00
	098607-01-706	EA	HOUSING, W/SWITCH ONLY	94-231-20
	098607-01-707	EA	MOTOR W/BASEPLATE	11-148-04

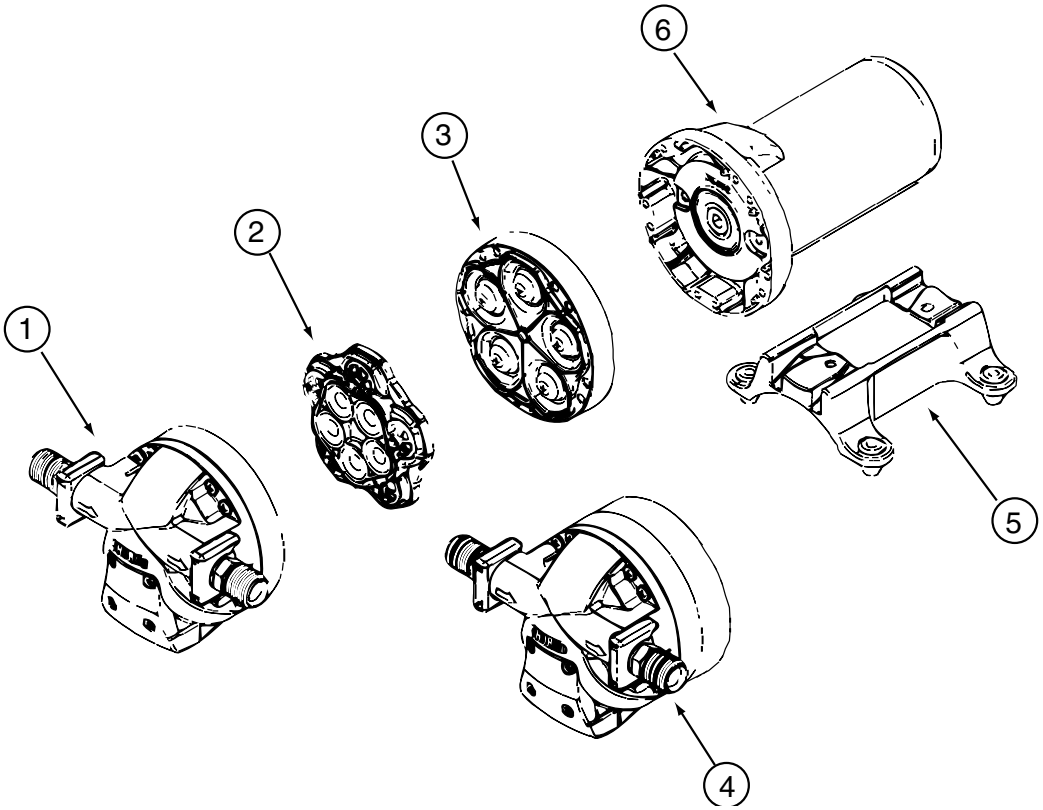

144215-01-000

KEY	PART NUMBER	U/M	DESCRIPTION	VENDOR NO.
2	144215-01-700	EA	VALVE ASSEMBLY	94-030-01
3	144215-01-701	EA	DRIVE ASSEMBLY	94-030-02
	144215-01-702	EA	FITTING KIT - W/ORINGS	94-615-06
			CONTACT WINNEBAGO PARTS SALES FOR UNLISTED COMPONENT(S)	

144215-02-000

KEY	PART NUMBER	U/M	DESCRIPTION	VENDOR NO.
	144215-02-700	EA	FITTING KIT- COUPLER W/ORING	94-637-00

COPYRIGHT © 2007 WINNEBAGO INDUSTRIES INC.

WATER & SEWAGE GROUP (CONTINUED)

COMPONENT PARTS FOR WATER SYSTEM (CONTINUED)

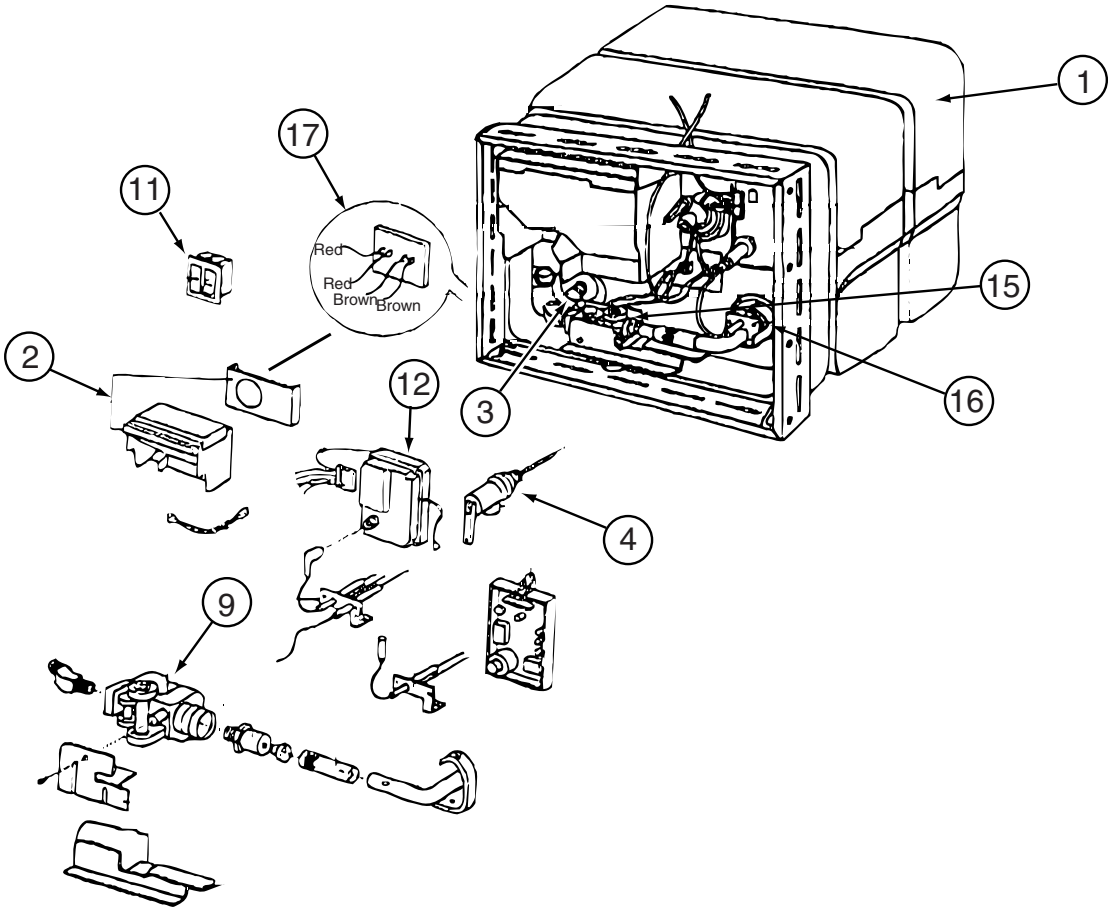

145541-02-000

KEY	PART NUMBER	U/M	DESCRIPTION	VENDOR NO.
1	145541-02-700	EA	TANK/SERVICE KIT PCS- 6 GAL	91053
2	051391-04-707	EA	KIT-EXHAUST, (FLUE & GASKET)	90960
3	051391-01-715	EA	PLUG-DRAIN, 1 EA = 2 PER PKG	91857
4	051391-01-704	EA	VALVE-RELIEF, 1/2" FITTING	91604
9	051393-01-726	EA	VALVE-SOLENOID - W/O BRACKET	93870
11	051393-01-701	EA	SWITCH - REMOTE - W/LIGHT	91959
11	145541-01-701	EA	SWITCH - ON/OFF - WHITE	91859
12	145541-01-702	EA	CIRCUIT BOARD	91226
15	145541-01-703	EA	SWITCH - THERMAL CUT OFF	93866
16	051393-01-725	EA	ELECTRODE-SGL SPADE CONNECT.	93868
17	051393-01-721	EA	THERMOSTAT W/ECO, 140 FRT MT	91447
	051391-05-706	EA	ELEMENT-HEATING 1500 WATT	92249 W/GASKET
	145541-01-704	EA	RELAY	90061
	145541-02-701	EA	JUNCTION BOX(PLASTIC) 6 GAL	91222
			CONTACT WINNEBAGO PARTS SALES FOR UNLISTED COMPONENT(S)	

COPYRIGHT © 2007 WINNEBAGO INDUSTRIES INC.

WINDOW & VENTS GROUP

WINDOW & VENT LAYOUT

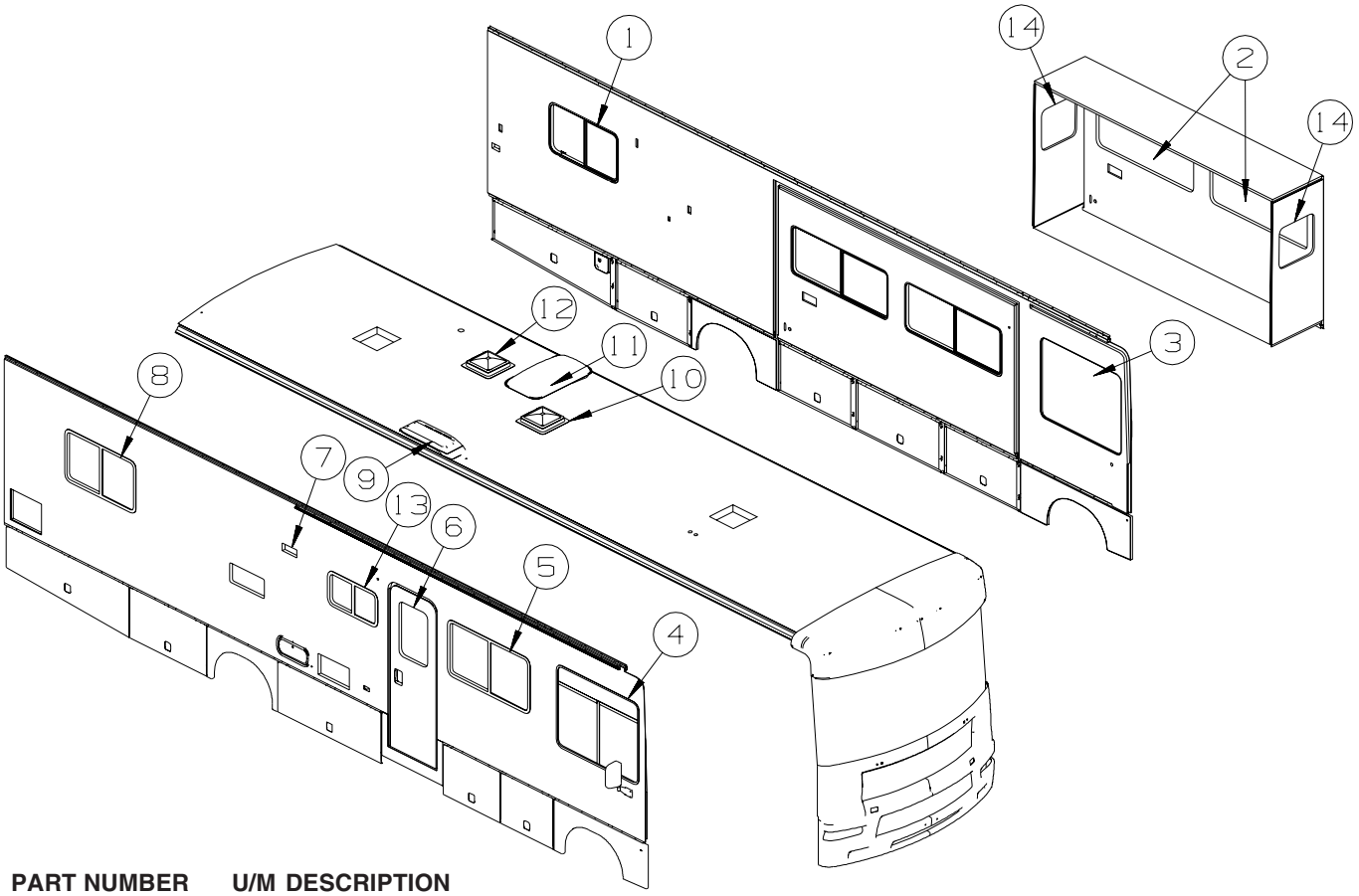

KEY	PART NUMBER	U/M	DESCRIPTION
1*	098647-63-01A	EA	WINDOW - DRIVER HORIZ SLIDER/EGRESS W/TRIM - 41" X 24.2"
1*	150648-12-01A	EA	WINDOW - HORIZ SLIDER/ESCAPE/FLUSH/THERMO/LH - 24.5" X 41.2" - DUAL PANE
2*	098647-47-02A	EA	WINDOW - DRIVER HORIZ SLIDER W/TRIM - TINTED - 57.4" X 23.6"
2*	150648-07-01A	EA	WINDOW - HORIZ SLIDER/FLUSH/THERMO/LH - 23.8" X 57.7" - DUAL PANE
3*	145573-02-01A	EA	WINDOW - CAB/DRIVER/RADIUS/3 GLASS - 39" X 47.9" - BLACK
3*	151069-01-01A	EA	WINDOW - CAB/LEFT HAND/FLUSH/THERMO - 39" X 47.9" - DUAL PANE
4*	145573-01-01A	EA	WINDOW - CAB/PASSENGER/RADIUS/3 GLASS - 39" X 47.9" - BLK
4*	151069-02-01A	EA	WINDOW - CAB/RIGHT HAND/FLUSH/THERMO - 39" X 47.9" - DUAL PANE
5*	098647-69-01A	EA	WINDOW - PASSENGER HORIZ SLIDER W/TRIM - 26.3" X 47.9"
5*	150648-06-01A	EA	WINDOW - HORIZ SLIDER/FLUSH/THERMO/RH - 26.3" X 47.9" - DUAL PANE
6	117053-02-F36	EA	WINDOW - PICTURE - W/O TRIM - 60% TINTING - 26.4" X 17"
	002181-25-000	EA	GLASS - PICTURE WINDOW - 25.8"W X 16.4"H
	087561-01-000	FT	SEAL - GLASS - EXTERIOR - .5" WIDE - VINYL BLACK
6	117054-02-03A	EA	TRIM/RETAINER - INSIDE - 16.9" X 26.2" - BLACK
6*	150651-01-01A	EA	WINDOW - STATIONARY/FLUSH/THERMO - 26.3" X 17" - DUAL PANE
7	147821-01-01A	EA	VENT - RANGE - OUTER - BRIGHT WHITE
7	147821-02-01A	EA	SHROUD - VENT - RANGE - BRIGHT WHITE
8*	098647-41-02A	EA	WINDOW - PASS HORIZ SLIDER W/TRIM - TINTED - 24.2" X 41"
8*	150648-11-01A	EA	WINDOW - HORIZ SLIDER/FLUSH/THERMO/RH - 24.5" X 41.2" - DUAL PANE
9	149508-01-02A	EA	CAP - ROOF/REFRIGERATOR VENT - WHITE
9	149508-02-02A	EA	BASE - ROOF/REFRIGERATOR VENT - BRIGHT WHITE
10*	122882-02-01A	EA	VENT - ROOF - W/FAN - W/O INSIDE GARNISH - UL
10*	122882-03-01A	EA	VENT - ROOF - W/FAN - W/O INSIDE GARNISH - CSA - CANADIAN
	009440-01-000	EA	GEAR/ARM - LIFT - ROOF VENT COVER
	048648-01-000	EA	MOTOR/ROOF VENT - W/RESISTER - 1/8"SHAFT - 12VOLT
	048649-01-000	EA	FAN BLADE - ROOF VENT - 6 BLADED - 6"RADIUS
10	122882-07-01A	EA	GARNISH - ROOF VENT - 2.5" TO 4.1"
11	122191-01-02A	EA	PANEL - SKYLIGHT - INNER W/LIGHT CUTOUT - 20.7" X 35.4"
11	138372-01-02B	EA	TRIM - CORNER - SKYLIGHT - E-COATED
11	138380-01-01A	EA	PANEL/SKYLIGHT - LARGE/OUTER - RECTANGULAR - WHITE

COPYRIGHT © 2007 WINNEBAGO INDUSTRIES INC.

WINDOW & VENTS GROUP (CONTINUED)

WINDOW & VENT LAYOUT (CONTINUED)

KEY	PART NUMBER	U/M	DESCRIPTION
12*	122882-01-01A	EA	VENT - ROOF - NONPOWERED - W/O INSIDE GARNISH
	009440-01-000	EA	GEAR/ARM - LIFT - ROOF VENT COVER
12	122882-07-01A	EA	GARNISH - ROOF VENT - 2.5" TO 4.1"
12*	123780-03-01A	EA	FANTASTIC VENT-3"/4"ROOF-W/FAN-W/O THERM/PWR LIFT - POWERED VENTILATOR VENT
	009440-01-000	EA	GEAR/ARM - LIFT - ROOF VENT COVER
13*	098647-33-02A	EA	WINDOW - PASS HORIZ SLIDER W/TRIM - CLEAR - 28.5" X 15.7"
13*	150648-04-01A	EA	WINDOW-HORIZ SLIDER/FLUSH/THERMO/RH - 16" X 28.7" - DUAL PANE
14*	098644-13-01A	EA	WINDOW - VERTICAL SLIDER W/TRIM - 19.8" X 20.9"
14*	150649-07-01A	EA	WINDOW - VERT SLIDER/FLUSH/THERMO - 19.8" X 20.8" - DUAL PANE

***COMPONENT PARTS LISTED LATER IN THIS GROUP**

COPYRIGHT © 2007 WINNEBAGO INDUSTRIES INC.

WINDOW & VENTS GROUP (CONTINUED)

COMPONENT PARTS FOR WINDOWS & VENT LAYOUT

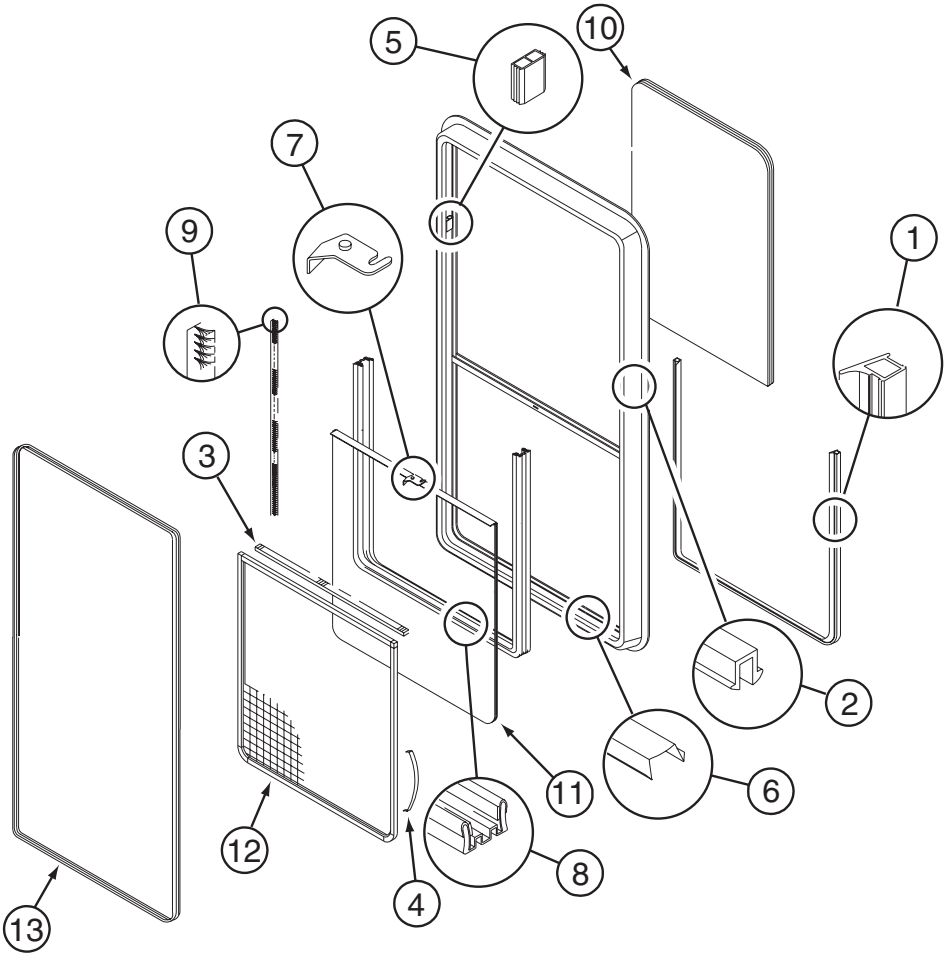

098644-13-01A

KEY	PART NUMBER	U/M	DESCRIPTION	VENDOR NO.
1	098644-01-716	FT	PLUG - FILLER	132-014470
2	098644-01-705	FT	GLAZING - STRIP	132-010231
3	098644-01-706	FT	WEATHERSTRIP - GLASS	171-010668
4	098644-01-713	EA	CLIP - SCREEN - METAL	226-016966
4	125582-01-701	EA	CLIP - SCREEN - PLASTIC	130-005153
5	098644-01-719	EA	STOP - SLIDER GLASS	132-014203
6	098644-01-710	FT	TRACK - SCREEN SPACER 12'	132-017135
7	098644-01-700	EA	LATCH - REPAIR KIT (BLACK)	B801-CK
7	098647-54-701	EA	LATCH - REPAIR KIT (RED)	B081-CK
8	098644-01-708	FT	CHANNEL - RUN PIERCED	122-016543
9	098644-01-711	FT	WEATHERSTRIP - SCREEN BLACK	171-016965
10	098644-13-700	EA	GLASS - STATIONARY	106-028698
11	098644-13-701	EA	GLASS - SLIDING W/SASH/LATCH	H702-G9
12	098644-13-702	EA	SCREEN ASM - W/SEALS/CLIPS	410-028663
13	098644-13-703	EA	RETAINER - TRIM	H702-60
	098644-01-717	FT	SPLINE - SCREEN	132-004716

COPYRIGHT © 2007 WINNEBAGO INDUSTRIES INC.

WINDOW & VENTS GROUP (CONTINUED)

COMPONENT PARTS FOR WINDOWS & VENT LAYOUT (CONTINUED)

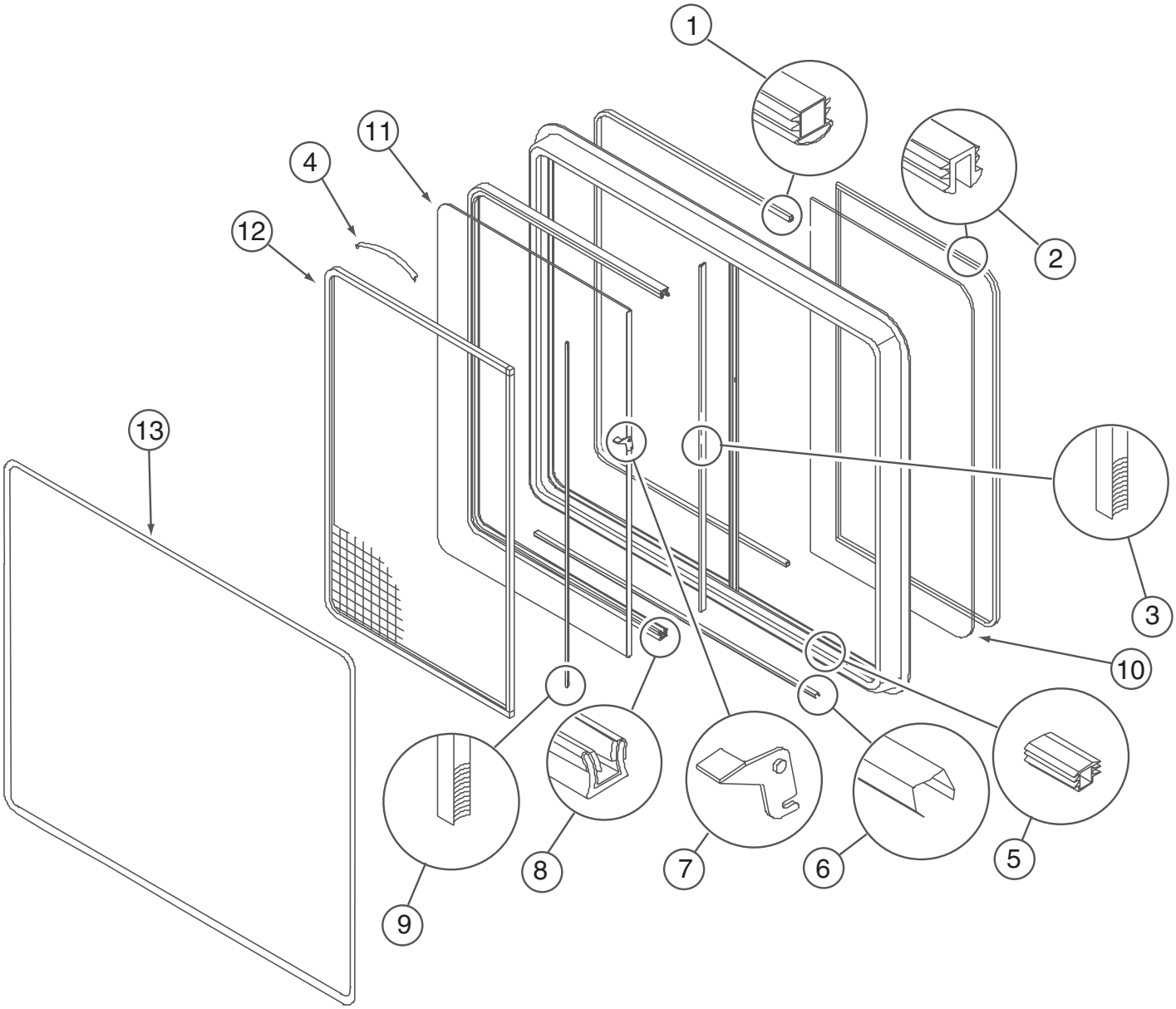

098647-33-02A

KEY	PART NUMBER	U/M	DESCRIPTION	VENDOR NO.
1	098644-01-716	FT	PLUG - FILLER	132-014470
2	098644-01-705	FT	GLAZING - STRIP	132-010231
3	098644-01-706	FT	WEATHERSTRIP - GLASS	171-010668
4	098644-01-713	EA	CLIP - SCREEN - METAL	226-016966
4	125582-01-701	EA	CLIP - SCREEN - PLASTIC	130-0
5	098644-01-719	EA	STOP - SLIDER GLASS	132-014203
6	098644-01-710	FT	TRACK - SCREEN SPACER 12'	132-017135
7	098647-54-701	EA	LATCH - REPAIR KIT (RED)	B081-CK
8	098644-01-708	FT	CHANNEL - RUN PIERCED	122-016543
9	098644-01-711	FT	WEATHERSTRIP - SCREEN BLACK	171-016965
10	098647-33-702	EA	GLASS - STATIONARY	106-019297
11	098647-33-703	EA	GLASS-SLIDING W/SASH & LATCH	H425-G9
12	098647-33-704	EA	SCREEN ASM - W/SEALS & CLIPS	410-019134
13	098647-31-705	EA	RETAINER - TRIM	CH29-66
	098644-01-717	FT	SPLINE - SCREEN	132-004716

COPYRIGHT © 2007 WINNEBAGO INDUSTRIES INC.

WINDOW & VENTS GROUP (CONTINUED)

COMPONENT PARTS FOR WINDOWS & VENT LAYOUT (CONTINUED)

098647-41-02A

KEY	PART NUMBER	U/M	DESCRIPTION	VENDOR NO.
1	098644-01-716	FT	PLUG - FILLER	132-014470
2	098644-01-705	FT	GLAZING - STRIP	132-010231
3	098644-01-706	FT	WEATHERSTRIP - GLASS	171-010668
4	098644-01-713	EA	CLIP - SCREEN - METAL	226-016966
4	125582-01-701	EA	CLIP - SCREEN - PLASTIC	130-005153
5	098644-01-719	EA	STOP - SLIDER GLASS	132-014203
6	098644-01-710	FT	TRACK - SCREEN SPACER 12'	132-017135
7	098647-54-701	EA	LATCH - REPAIR KIT (RED)	B081-CK
8	098644-01-708	FT	CHANNEL - RUN PIERCED	122-016543
9	098644-01-711	FT	WEATHERSTRIP - SCREEN BLACK	171-016965
10	098647-41-701	EA	GLASS - STATIONARY	106-015474
11	098647-41-700	EA	GLASS-SLIDING W/SASH & LATCH	H172-G9
12	098647-29-704	EA	SCREEN ASM - W/SEALS & CLIPS	410-018864
13	098647-29-705	EA	RETAINER - TRIM	CH04-66
	098644-01-717	FT	SPLINE - SCREEN	132-004716

098647-47-02A

KEY	PART NUMBER	U/M	DESCRIPTION	VENDOR NO.
1	098644-01-716	FT	PLUG - FILLER	132-014470
2	098644-01-705	FT	GLAZING - STRIP	132-010231
3	098644-01-706	FT	WEATHERSTRIP - GLASS	171-010668
4	098644-01-713	EA	CLIP - SCREEN - METAL	226-016966
4	125582-01-701	EA	CLIP - SCREEN - PLASTIC	130-005153
5	098644-01-719	EA	STOP - SLIDER GLASS	132-014203
6	098644-01-710	FT	TRACK - SCREEN SPACER 12'	132-017135
7	098644-01-700	EA	LATCH - REPAIR KIT (BLACK)	B801-CK
7	098647-54-701	EA	LATCH - REPAIR KIT (RED)	B081-CK
8	098644-01-708	FT	CHANNEL - RUN PIERCED	122-016543
9	098644-01-711	FT	WEATHERSTRIP - SCREEN BLACK	171-016965
10	098647-47-700	EA	GLASS - STATIONARY	106-025224
11	098647-47-701	EA	GLASS-SLIDING W/SASH & LATCH	H493-G9
12	098647-47-702	EA	SCREEN ASM - W/SEALS & CLIPS	410-025226
13	098647-47-704	EA	RETAINER - TRIM	H493-66
	098644-01-717	FT	SPLINE - SCREEN	132-004716

098647-63-01A

KEY	PART NUMBER	U/M	DESCRIPTION	VENDOR NO.
1	098644-01-716	FT	PLUG - FILLER	132-014470
2	098644-01-705	FT	GLAZING - STRIP	132-010231
3	098644-01-706	FT	WEATHERSTRIP - GLASS	171-010668
4	098644-01-713	EA	CLIP - SCREEN - METAL	226-016966
4	125582-01-701	EA	CLIP - SCREEN - PLASTIC	130-0
5	098644-01-719	EA	STOP - SLIDER GLASS	132-014203
6	098644-01-710	FT	TRACK - SCREEN SPACER 12'	132-017135
7	098647-54-701	EA	LATCH - REPAIR KIT (RED)	B081-CK
8	098644-01-708	FT	CHANNEL - RUN PIERCED	122-016543
9	098644-01-711	FT	WEATHERSTRIP - SCREEN BLACK	171-016965
10	098647-56-700	EA	GLASS - STATIONARY	106-019401
11	098647-63-700	EA	GLASS-SLIDING W/SASH & LATCH	H422-G9
12	112795-62-702	EA	SCREEN ASSY - W/SEAL & CLIPS	410-018866
13	112795-62-704	EA	RETAINER - TRIM	H422-64
	098644-01-717	FT	SPLINE - SCREEN	132-004716

COPYRIGHT © 2007 WINNEBAGO INDUSTRIES INC.

WINDOW & VENTS GROUP (CONTINUED)

COMPONENT PARTS FOR WINDOWS & VENT LAYOUT (CONTINUED)

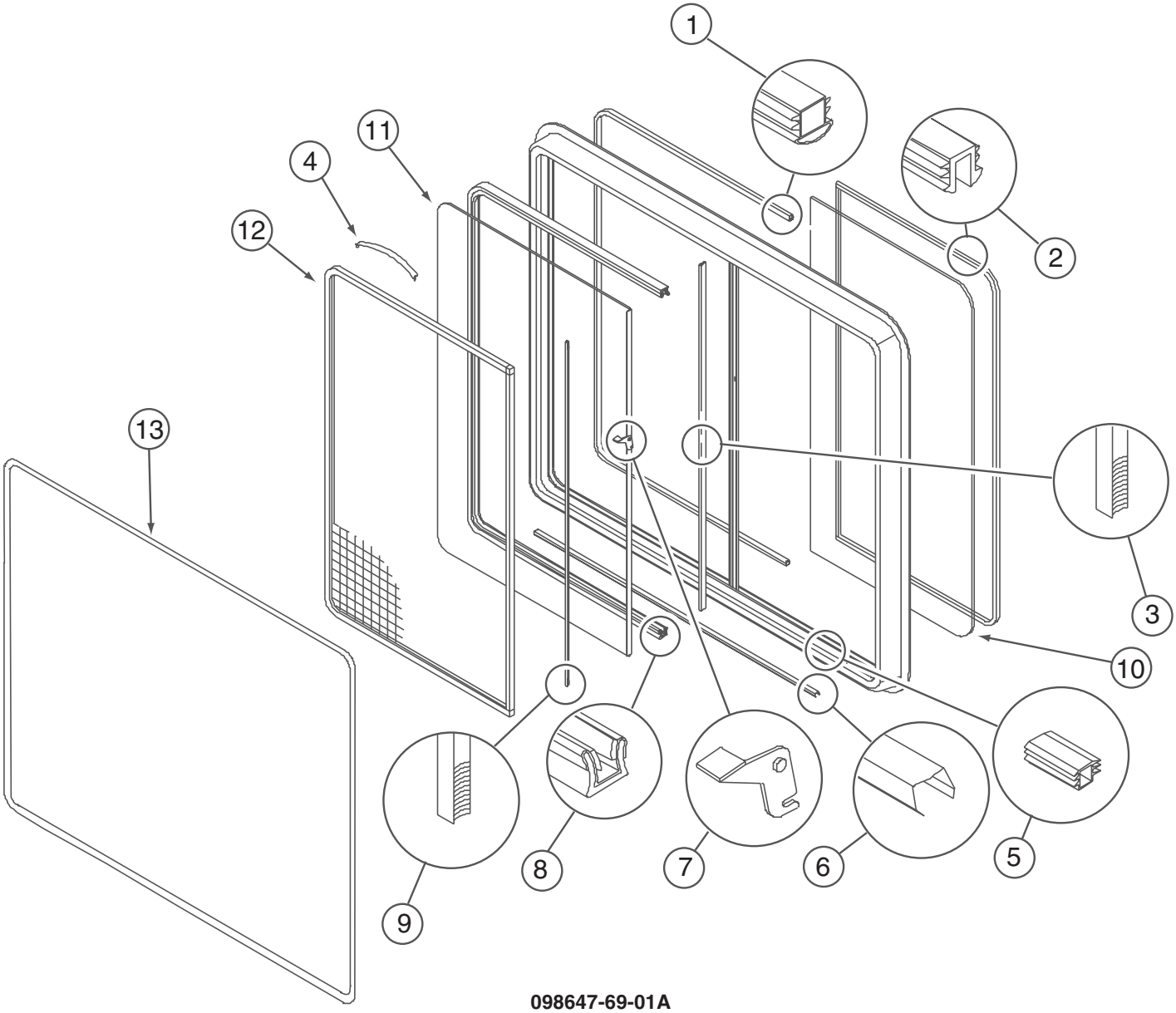

098647-69-01A

KEY	PART NUMBER	U/M	DESCRIPTION	VENDOR NO.
1	098644-01-716	FT	PLUG - FILLER	132-014470
2	098644-01-705	FT	GLAZING - STRIP	132-010231
3	098644-01-706	FT	WEATHERSTRIP - GLASS	171-010668
4	125582-01-701	EA	CLIP - SCREEN - PLASTIC	130-0
5	098644-01-719	EA	STOP - SLIDER GLASS	132-014203
6	098644-01-710	FT	TRACK - SCREEN SPACER 12'	132-017135
7	098644-01-700	EA	LATCH - REPAIR KIT (BLACK)	B801-CK
8	098644-01-708	FT	CHANNEL - RUN PIERCED	122-016543
9	098644-01-711	FT	WEATHERSTRIP - SCREEN BLACK	171-016965
10	098647-69-700	EA	GLASS - STATIONARY	106-018715
11	098647-69-701	EA	GLASS-SLIDING W/SASH & LATCH	H320G9
12	098647-38-704	EA	SCREEN ASM - W/SEALS & CLIPS	410-019063
13	098647-38-705	EA	RETAINER - TRIM	H303-66
	098644-01-717	FT	SPLINE - SCREEN	132-004716

COPYRIGHT © 2007 WINNEBAGO INDUSTRIES INC.

WINDOW & VENTS GROUP (CONTINUED)

COMPONENT PARTS FOR WINDOWS & VENT LAYOUT (CONTINUED)

122882-01-01A

KEY	PART NUMBER	U/M	DESCRIPTION	VENDOR NO.
	009440-01-000	EA	GEAR-ARM-ROOF VENT	705221K38
	064470-01-700	EA	COVER - VENT	J7291
	064470-01-701	EA	SLIDE BAR - VENT LID	JRP1291B
	122882-01-700	EA	HANDLE - CRANK - BLACK	90128
	122882-01-701	EA	SCREEN	JRP-1124-B
	122882-01-702	EA	HANDLE - CRANK - WHITE	JRP1031B

122882-02-01A, 122882-03-01A

KEY	PART NUMBER	U/M	DESCRIPTION	VENDOR NO.
	009440-01-000	EA	GEAR-ARM-ROOF VENT	705221K38
	048648-01-000	EA	MOTOR-12V NONVENTED 1/8 SFT	JRP2190 CSA W/RESIS
	048649-01-000	EA	FAN-PLAS-6 IN 6 BLADED	1976 PWR ROOF VENT
	064470-01-700	EA	COVER - VENT	J7291
	064470-01-701	EA	SLIDE BAR - VENT LID	JRP1291B
	110051-03-700	EA	SWITCH-BLACK/PUSH BUTTON	27-0164
	122882-01-700	EA	HANDLE - CRANK - BLACK	90128
	122882-01-701	EA	SCREEN	JRP-1124-B
	122882-01-702	EA	HANDLE - CRANK - WHITE	JRP1031B

COPYRIGHT © 2007 WINNEBAGO INDUSTRIES INC.

WINDOW & VENTS GROUP (CONTINUED)

COMPONENT PARTS FOR WINDOWS & VENT LAYOUT (CONTINUED)

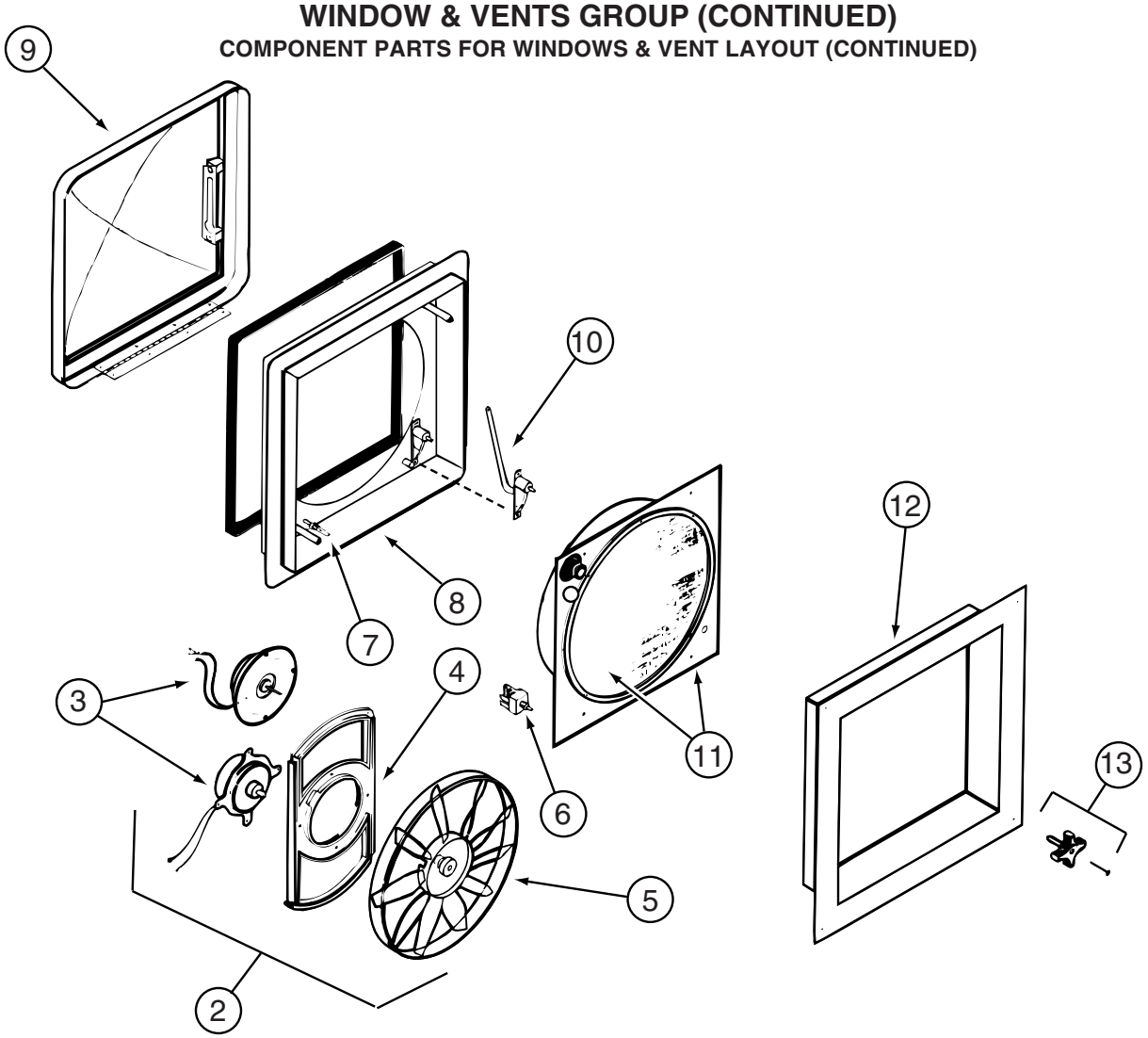

123780-03-01A

KEY	PART NUMBER	U/M	DESCRIPTION	VENDOR NO.
2	084079-11-700	EA	MOTOR & FAN BLADE W/BRACKET	K4017-09
3	084079-01-705	EA	MOTOR/EXT BRKT/FAN BLADE KIT	1080-00
4	084079-01-711	EA	MOTOR MOUNT (BOWTIE)	1015-00
5	084079-01-704	EA	BLADE-FAN	1138-00
6	084079-01-709	EA	SWITCH - MAIN - 3 SPEED	1031-05
7	084079-01-707	EA	SWITCH - SAFETY	1122-05
8	123780-05-700	EA	BASE/MAIN-BRT WHT W/GASKET	1010-81
9	123780-01-700	EA	COVER - VENT W/HINGE & SLIDE	1020K-81
11	123780-03-701	EA	SCREEN ASM 78-100MM W/SWITCH	1030BT-81
12	123780-03-700	EA	GARNISH - INT. 3"-4" BRT/WHT	2040-81
13	084079-01-703	EA	KNOB-LIFT	1140K-00
	084079-01-706	EA	PLUG, 12 VOLT	1090
	123780-01-702	EA	SCREEN INSERT (SCREEN RING)	K1035-81
			CONTACT WINNEBAGO PART SALES FOR UNLISTED COMPONENT(S)	

COPYRIGHT © 2007 WINNEBAGO INDUSTRIES INC.

WINDOW & VENTS GROUP (CONTINUED)

COMPONENT PARTS FOR WINDOWS & VENT LAYOUT (CONTINUED)

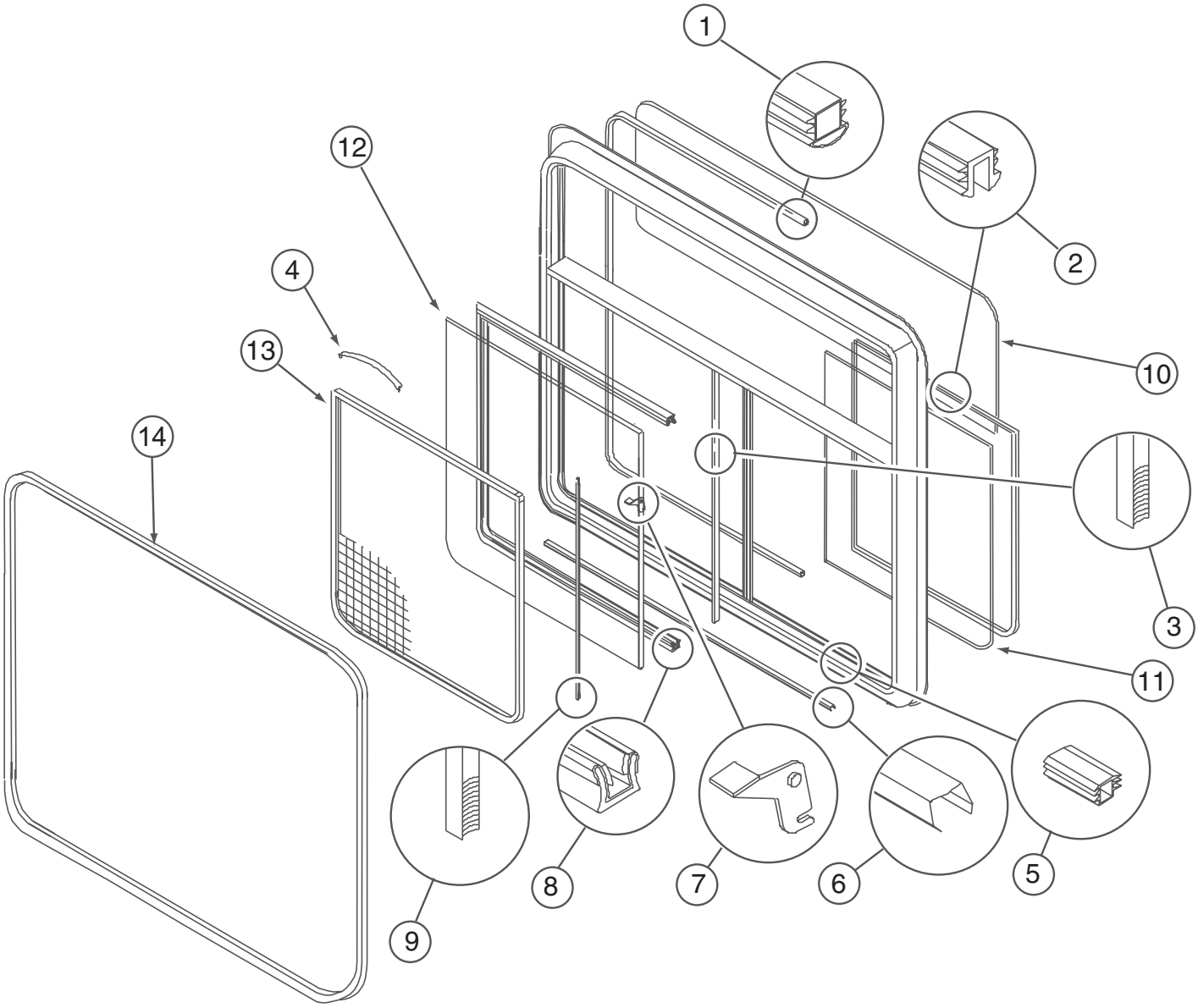

145573-01-01A

KEY	PART NUMBER	U/M	DESCRIPTION	VENDOR NO
1	098644-01-716	FT	PLUG - FILLER	132-014470
4	098644-01-713	EA	CLIP - SCREEN - METAL	226-016966
4	125582-01-701	EA	CLIP - SCREEN - PLASTIC	130-005153
5	098644-01-719	EA	STOP - SLIDER GLASS	132-014203
6	098644-01-710	FT	TRACK - SCREEN SPACER 12'	132-017135
7	098644-01-700	EA	LATCH - REPAIR KIT (BLACK)	B801-CK
8	098644-01-708	FT	CHANNEL - RUN PIERCED	122-016543
9	098644-01-711	FT	WEATHERSTRIP - SCREEN BLACK	171-016965
10	145573-01-701	EA	GLASS - STATIONARY (TOP)	106-030654
11	145573-01-702	EA	GLASS - STATIONARY (LOWER)	106-030926
12	145573-01-703	EA	GLASS-SLIDING W/SASH & LATCH	H841-A9
13	145573-01-700	EA	SCREEN ASM - W/SEALS & CLIP	410-030660
14	112795-66-703	EA	RETAINER - TRIM	H611-66
	098644-01-717	FT	SPLINE - SCREEN	132-004716

COPYRIGHT © 2007 WINNEBAGO INDUSTRIES INC.

WINDOW & VENTS GROUP (CONTINUED)

COMPONENT PARTS FOR WINDOWS & VENT LAYOUT (CONTINUED)

145573-02-01A

KEY	PART NUMBER	U/M	DESCRIPTION	VENDOR NO
1	098644-01-716	FT	PLUG - FILLER	132-014470
3	098644-01-706	FT	WEATHERSTRIP - GLASS	171-010668
4	098644-01-713	EA	CLIP - SCREEN - METAL	226-016966
4	125582-01-701	EA	CLIP - SCREEN - PLASTIC	130-005153
6	098644-01-710	FT	TRACK - SCREEN SPACER 12'	132-017135
7	098644-01-700	EA	LATCH - REPAIR KIT (BLACK)	B801-CK
8	098644-01-708	FT	CHANNEL - RUN PIERCED	122-016543
9	098644-01-711	FT	WEATHERSTRIP - SCREEN BLACK	171-016965
10	145573-01-701	EA	GLASS - STATIONARY (TOP)	106-030654
11	145573-01-702	EA	GLASS - STATIONARY (LOWER)	106-030926
12	145573-02-701	EA	GLASS-SLIDING W/SASH & LATCH	H841-A9L
13	145573-02-700	EA	SCREEN W/SEALS AND CLIPS	410-030659
14	112795-66-703	EA	RETAINER - TRIM	H611-66
	098644-01-717	FT	SPLINE - SCREEN	132-004716

COPYRIGHT © 2007 WINNEBAGO INDUSTRIES INC.

WINDOW & VENTS GROUP (CONTINUED)

COMPONENT PARTS FOR WINDOWS & VENT LAYOUT (CONTINUED)

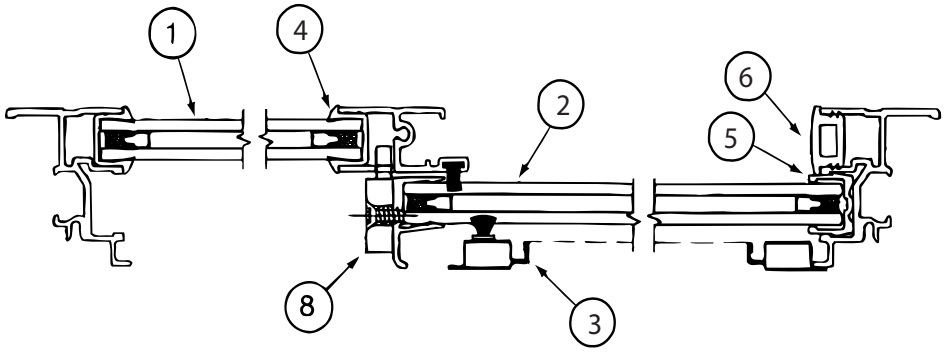

CROSS SECTION B-B

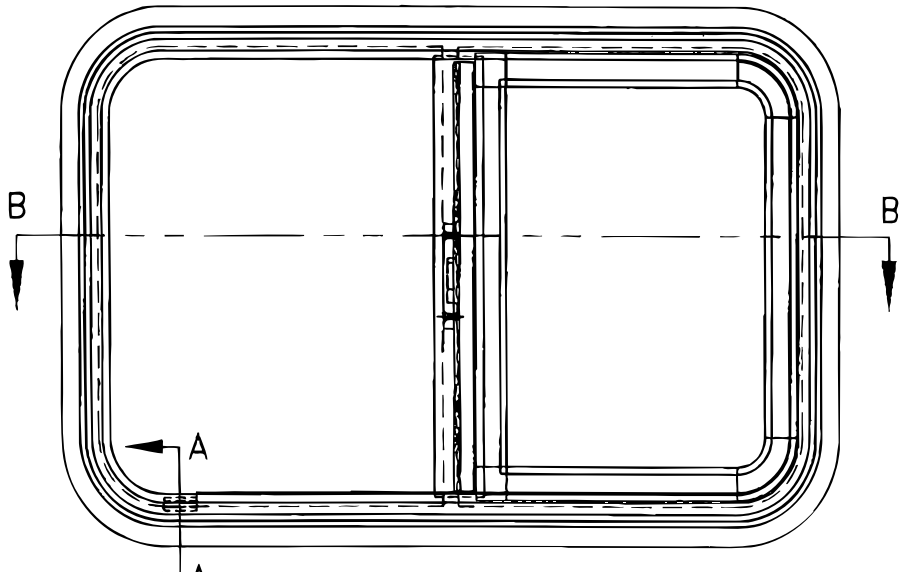

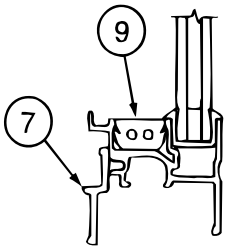

CROSS SECTION
A-A

150648-04-01A

KEY	PART NUMBER	U/M	DESCRIPTION	VENDOR NO
1	112795-72-700	EA	GLASS - STATIONARY	390-028307
2	150648-04-700	EA	GLASS-SLIDING W/SASH & LATCH	FH3002G8
3	150648-05-700	EA	SCREEN ASM	410-031158
4	112795-01-705	FT	VINYL - GLAZING	132-027331
5	151069-01-700	EA	CHANNEL-RUN, SLIDING	122-030627
6	150648-01-703	EA	PLUG - FILLER	132-030308
7	150648-05-701	EA	RETAINER - TRIM	CH29-67
8	150648-01-700	EA	LATCH-HORIZONTAL SLIDE-BLK	FH3000-CK
8	150648-01-701	EA	LATCH-HORIZONTAL SLIDE-RED	FH3003-CK
9	150648-01-704	EA	SLIDE STOP	132-030866

150648-06-01A

KEY	PART NUMBER	U/M	DESCRIPTION	VENDOR NO
1	112795-74-700	EA	GLASS - STATIONARY	390-028337
2	150648-06-700	EA	GLASS-SLIDING W/SASH & LATCH	FH3006G8
3	150648-06-701	EA	SCREEN ASM	410-035329
4	112795-01-705	FT	VINYL - GLAZING	132-027331
5	151069-01-700	EA	CHANNEL-RUN, SLIDING	122-030627
6	150648-01-703	EA	PLUG - FILLER	132-030308
7	150648-06-702	EA	RETAINER - TRIM	H303-67
8	150648-01-700	EA	LATCH-HORIZONTAL SLIDE-BLK	FH3000-CK
8	150648-01-701	EA	LATCH-HORIZONTAL SLIDE-RED	FH3003-CK
9	150648-01-704	EA	SLIDE STOP	132-030866

COPYRIGHT © 2007 WINNEBAGO INDUSTRIES INC.

WINDOW & VENTS GROUP (CONTINUED)

COMPONENT PARTS FOR WINDOWS & VENT LAYOUT (CONTINUED)

150648-07-01A

KEY	PART NUMBER	U/M	DESCRIPTION	VENDOR NO
1	150648-07-701	EA	GLASS - STATIONARY	390-028314
2	150648-07-700	EA	GLASS-SLIDING W/SASH & LATCH	FH3000G8
3	150648-01-702	EA	SCREEN ASM	410-031156
4	112795-01-705	FT	VINYL - GLAZING	132-027331
5	151069-01-700	EA	CHANNEL-RUN, SLIDING	122-030627
6	150648-01-703	EA	PLUG - FILLER	132-030308
7	150648-01-707	EA	RETAINER - TRIM	H493-67
8	150648-01-700	EA	LATCH-HORIZONTAL SLIDE-BLK	FH3000-CK
8	150648-01-701	EA	LATCH-HORIZONTAL SLIDE-RED	FH3003-CK
9	150648-01-704	EA	SLIDE STOP	132-030866

150648-11-01A

KEY	PART NUMBER	U/M	DESCRIPTION	VENDOR NO
1	150648-11-700	EA	GLASS - STATIONARY	390-035650
2	150648-11-701	EA	GLASS-SLIDING W/SASH & LATCH	FH3057G8
3	150648-11-702	EA	SCREEN ASM	410-035635
4	112795-01-705	FT	VINYL - GLAZING	132-027331
5	151069-01-700	EA	CHANNEL-RUN, SLIDING	122-030627
6	150648-01-703	FT	PLUG - FILLER	132-030308
7	150648-11-703	EA	RETAINER - TRIM	CH04-67
8	150648-01-700	EA	LATCH-HORIZONTAL SLIDE-BLK	FH3000-CK
8	150648-01-701	EA	LATCH-HORIZONTAL SLIDE-RED	FH3003-CK
9	150648-01-704	EA	SLIDE STOP	132-030866

150648-12-01A

KEY	PART NUMBER	U/M	DESCRIPTION	VENDOR NO
1	150648-15-700	EA	GLASS - STATIONARY	390-035689
2	150648-15-701	EA	GLASS-SLIDING W/SASH & LATCH	FH3060G8
3	150648-15-702	EA	SCREEN ASM	410-035691
4	112795-01-705	FT	VINYL - GLAZING	132-027331
5	151069-01-700	EA	CHANNEL-RUN, SLIDING	122-030627
6	150648-01-703	FT	PLUG - FILLER	132-030308
7	150648-15-703	EA	RETAINER - TRIM	FH814-60
8	150648-01-700	EA	LATCH-HORIZONTAL SLIDE-BLK	FH3000-CK
8	150648-01-701	EA	LATCH-HORIZONTAL SLIDE-RED	FH3003-CK
9	150648-01-704	EA	SLIDE STOP	132-030866
10	112898-06-707	EA	HANDLE/RH - EGRESS (SLD) ESC-RED	182-025911
11	112898-06-708	EA	HANDLE/LH - EGRESS (SLD) ESC-RED	182-025912

COPYRIGHT © 2007 WINNEBAGO INDUSTRIES INC.

WINDOW & VENTS GROUP (CONTINUED)

COMPONENT PARTS FOR WINDOWS & VENT LAYOUT (CONTINUED)

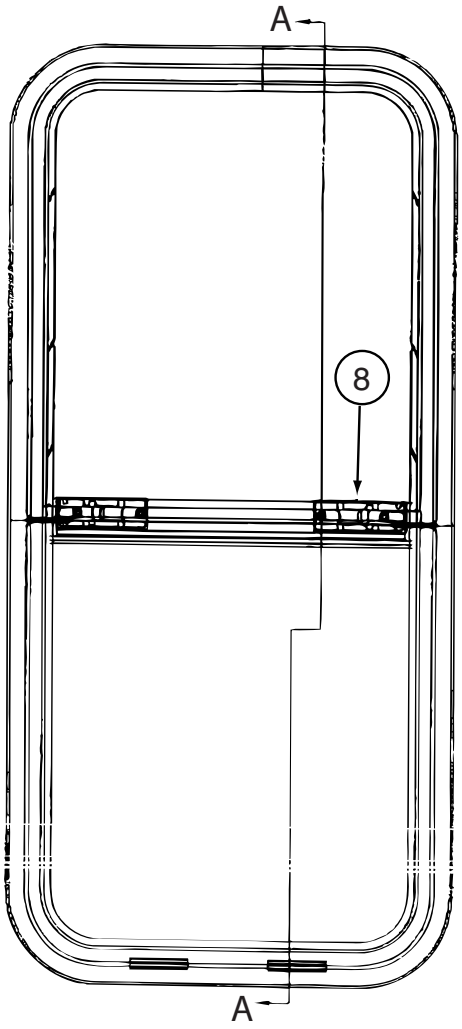

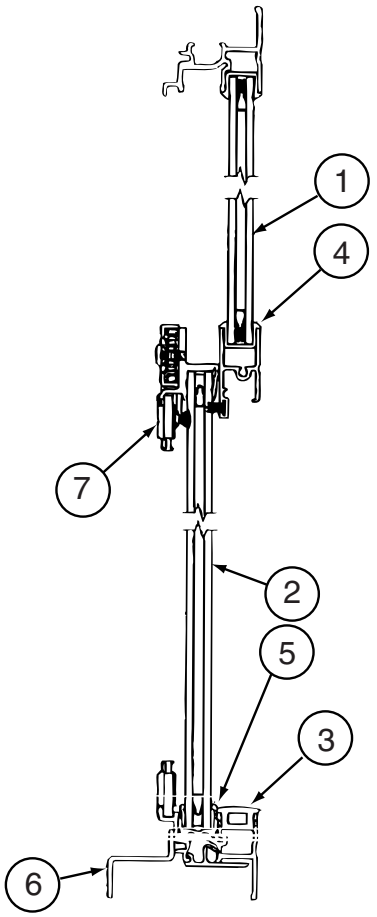

CROSS SECTION A-A

150649-07-01A

KEY	PART NUMBER	U/M	DESCRIPTION	VENDOR NO
1	150649-07-700	EA	GLASS - STATIONARY	390-028662
2	150649-07-702	EA	GLASS-SLIDING W/PULL & LATCH	FH3052G8
3	150648-01-703	FT	PLUG - FILLER	132-030308
4	112795-01-705	FT	VINYL - GLAZING	132-027331
5	151069-01-700	FT	CHANNEL-RUN, SLIDING	122-030627
6	150649-07-703	EA	RETAINER - TRIM	H702-61
7	150649-07-701	EA	SCREEN ASM	410-035475
8	150649-01-700	EA	LATCH-VERTICLE SLIDE-BLK	FH3016-CK

COPYRIGHT © 2007 WINNEBAGO INDUSTRIES INC.

WINDOW & VENTS GROUP (CONTINUED)

COMPONENT PARTS FOR WINDOWS & VENT LAYOUT (CONTINUED)

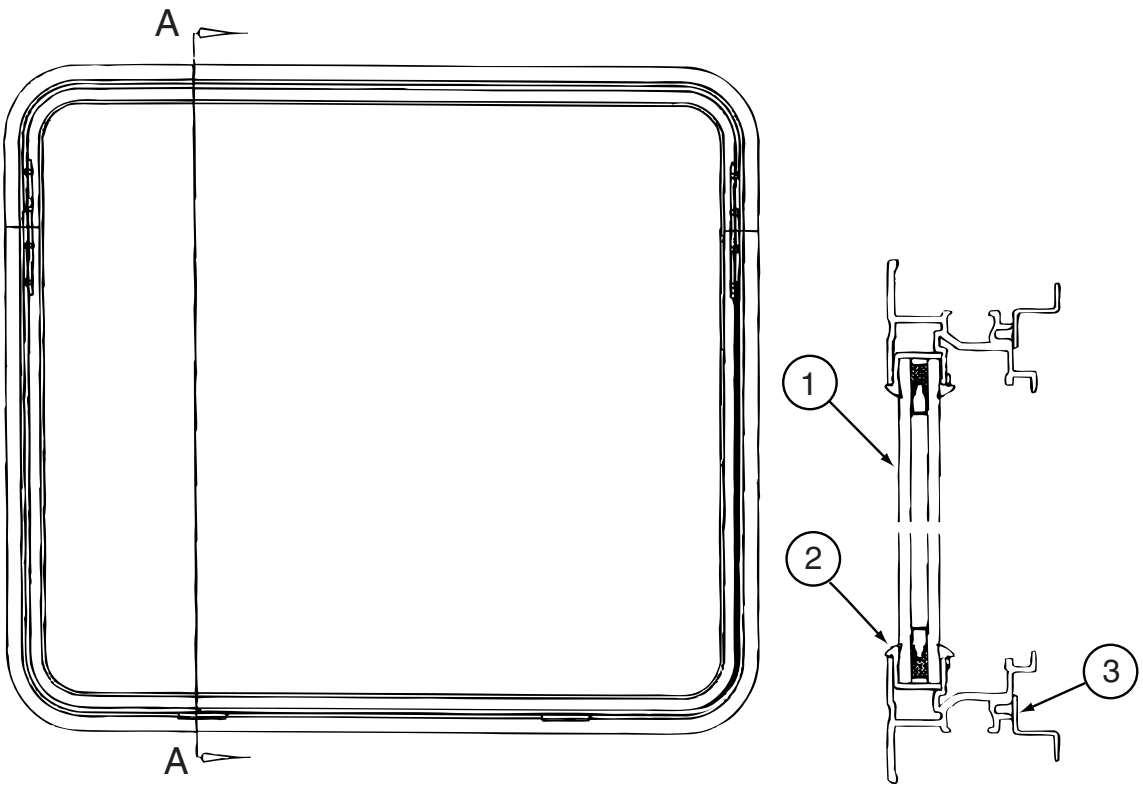

CROSS SECTION A-A

150651-01-01A

KEY	PART NUMBER	U/M	DESCRIPTION	VENDOR NO
1	113733-10-700	EA	GLASS-STATIONARY	390-028306
2	112795-01-705	FT	VINYL - GLAZING	132-027331
3	150651-01-700	EA	RETAINER - TRIM	H416-67

COPYRIGHT © 2007 WINNEBAGO INDUSTRIES INC.

WINDOW & VENTS GROUP (CONTINUED)

COMPONENT PARTS FOR WINDOWS & VENT LAYOUT (CONTINUED)

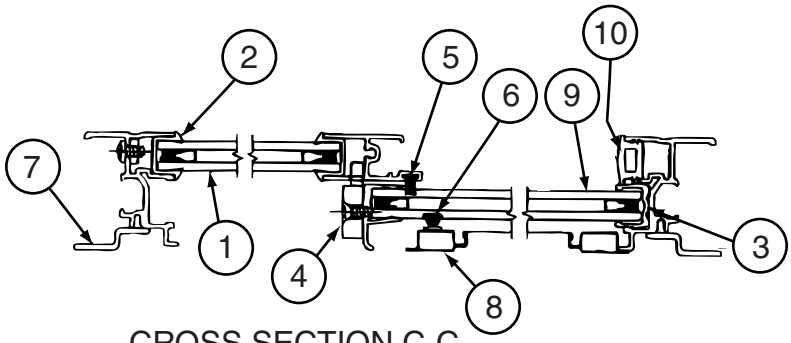

CROSS SECTION C-C

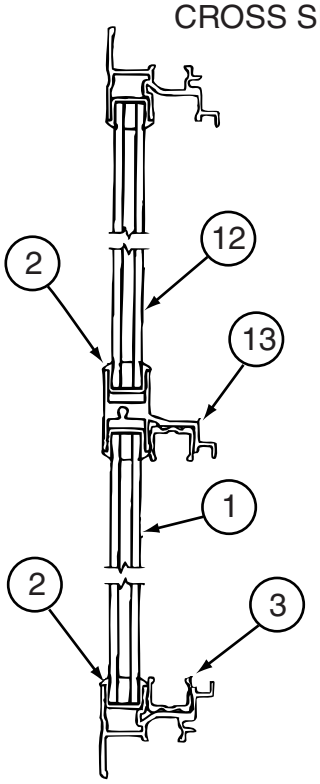

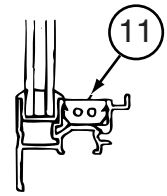

CROSS SECTION E-E

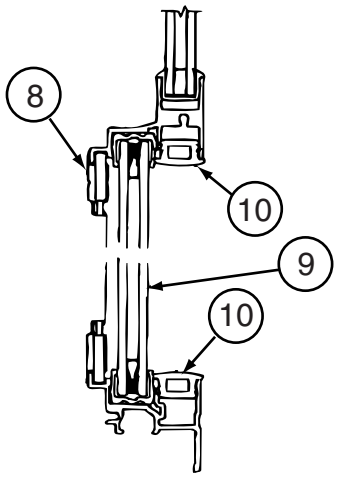

CROSS SECTION A-A

CROSS SECTION B-B

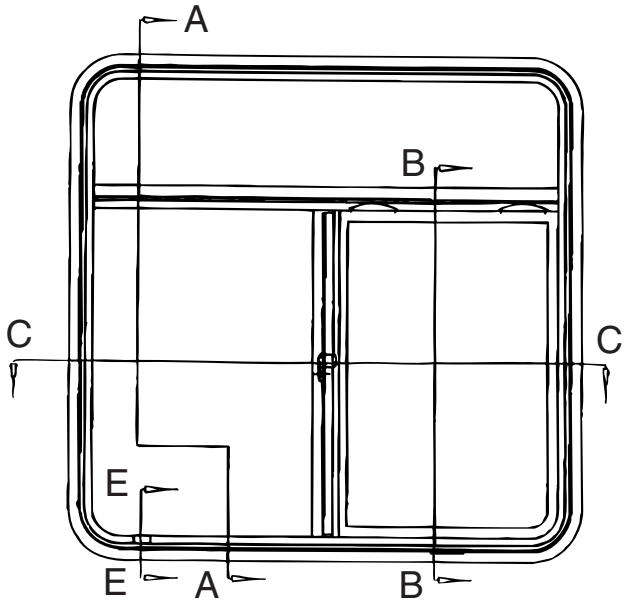

151069-01-01A

KEY	PART NUMBER	U/M	DESCRIPTION	VENDOR NO
1	150648-04-700	EA	GLASS - STATIONARY LWR	390-035010
2	112795-01-705	FT	VINYL - GLAZING	132-027331
3	151069-01-700	EA	CHANNEL-RUN, SLIDING	122-030627
4	150648-01-700	EA	LATCH-HORIZONTAL SLIDE-BLK	FH3000-CK
5	150649-05-702	EA	FIN SEAL-F/LOCKING RAIL-BLK	171-062348
6	151069-01-705	EA	WEATHERSTRIP/SCREEN	171-030310
7	150648-16-702	EA	RETAINER - TRIM	H611-67
8	151069-01-701	EA	SCREEN ASM	410-035641 (LH)
9	151069-01-702	EA	GLASS-SLIDING W/SASH & LATCH	FH3059A9L
10	150648-01-703	EA	PLUG - FILLER	132-030308
11	150648-01-704	EA	SLIDE STOP	132-030866
12	151069-01-704	EA	GLASS - STATIONARY - UPPER	390-035653
13	151069-02-704	EA	RAIL/HORIZONTAL - LEFT	FH3059-20L
	151069-01-703	EA	COVER - DRAIN SLOT - LH	130-030398 LEFT

COPYRIGHT © 2007 WINNEBAGO INDUSTRIES INC.

WINDOW & VENTS GROUP (CONTINUED)

COMPONENT PARTS FOR WINDOWS & VENT LAYOUT (CONTINUED)

151069-02-01A

KEY	PART NUMBER	U/M	DESCRIPTION	VENDOR NO
1	145573-04-700	EA	GLASS - STATIONARY LWR	390-035010
2	112795-01-705	FT	VINYL - GLAZING	132-027331
3	151069-01-700	EA	CHANNEL-RUN, SLIDING	122-030627
4	150648-01-700	EA	LATCH-HORIZONTAL SLIDE-BLK	FH3000-CK
5	150649-05-702	EA	FIN SEAL-F/LOCKING RAIL-BLK	171-062348
6	151069-01-705	EA	WEATHERSTRIP/SCREEN	171-030310
7	150648-16-702	EA	RETAINER - TRIM	H611-67
8	151069-02-700	EA	SCREEN ASM	410-035637 (RH)
9	151069-02-701	EA	GLASS-SLIDING W/SASH & LATCH	FH3059A9R
10	150648-01-703	FT	PLUG - FILLER	132-030308
11	150648-01-704	EA	SLIDE STOP	132-030866
12	151069-01-704	EA	GLASS - STATIONARY - UPPER	390-035653
13	151069-01-706	EA	RAIL/HORIZONTAL - RIGHT	FH3059-20R
	151069-02-703	EA	COVER - DRAIN SLOT - RH HAND	130-030397 RIGHT

COPYRIGHT © 2007 WINNEBAGO INDUSTRIES INC.

WINDSHIELD & WIPER GROUP

WINDSHIELD

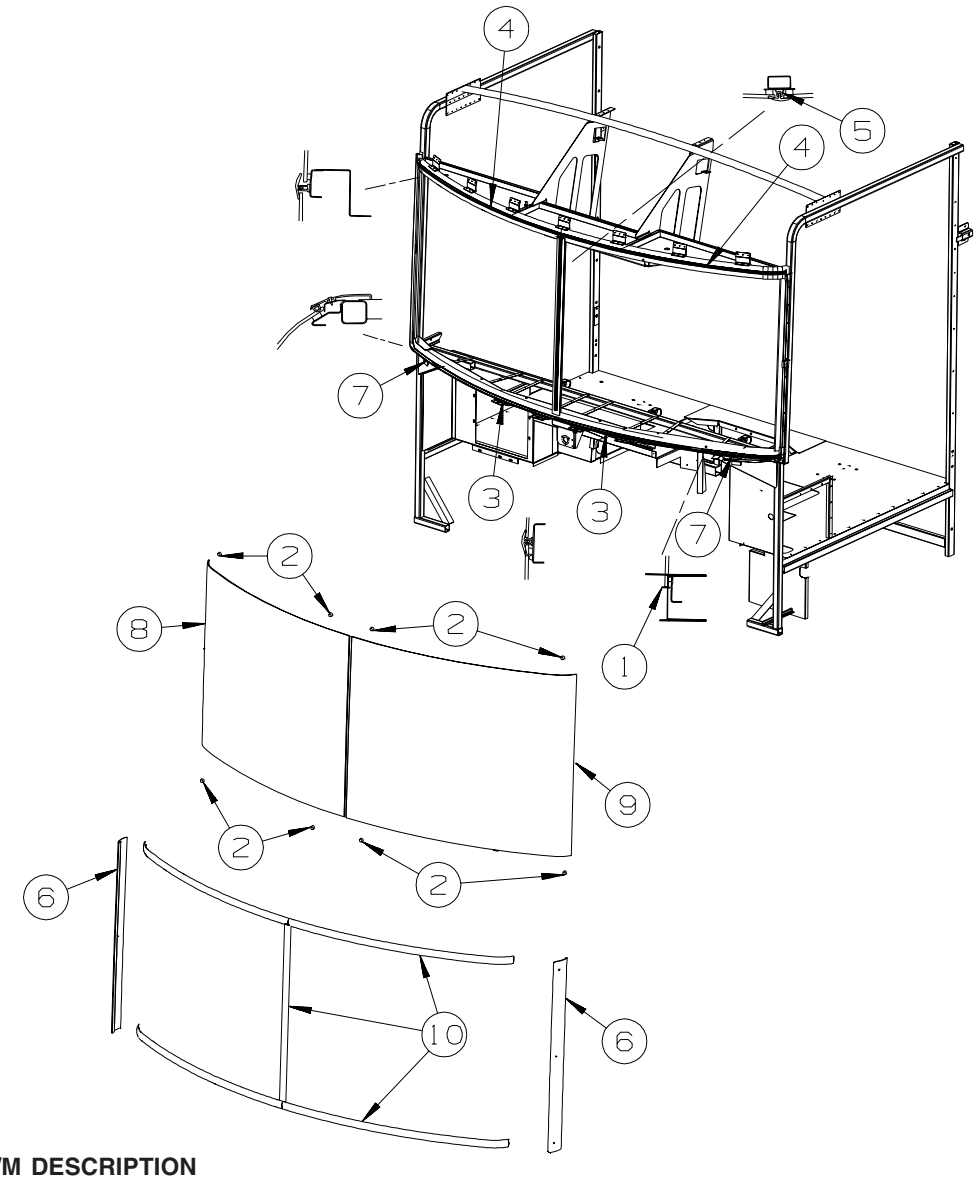

KEY	PART NUMBER	U/M	DESCRIPTION
1	002328-02-000	EA	BLOCK - WINDSHIELD - .062" X .5" X .98"
			FROM: 00-00-00 THRU: 04-02-06
1	002328-03-000	EA	BLOCK - WINDSHIELD - .125" X .5" X .98"
			FROM: 04-03-06 THRU: 99-99-99
2	081914-02-000	EA	BUMPER - RUBBER - ROUND - 5/16" DIA. X 13/64" THICK
3	132375-04-000	EA	CARRIER/REVEAL - WINDSHIELD - 29.8"
4	127862-01-000	EA	CARRIER/REVEAL - WINDSHIELD - 47.2"
5	127862-09-000	EA	CARRIER/REVEAL - WINDSHIELD - 38.6"
6	129497-07-03A	EA	TRIM - WINDSHIELD/"A"-PILLAR - PASSENGER - BRIGHT WHITE
7	132375-01-000	EA	CARRIER/REVEAL - WINDSHIELD - 5.5"
8	137583-01-000	EA	WINDSHIELD - PASSENGER (CURVED) 52.4" X 40.5"
9	137583-02-000	EA	WINDSHIELD - DRIVER (CURVED) 52.4" X 40.5"
10	120533-01-000	FT	MOLDING - REVEAL - WINDSHIELD

COPYRIGHT © 2007 WINNEBAGO INDUSTRIES INC.

WINDSHIELD & WIPER GROUP (CONTINUED)

WIPER

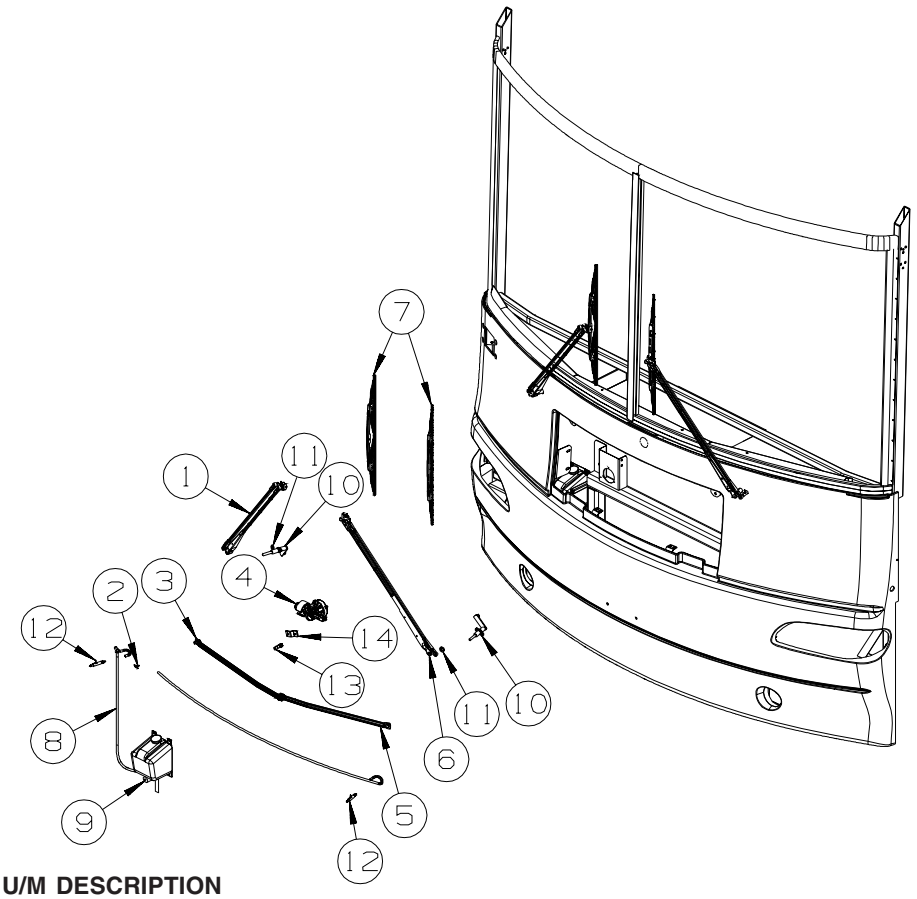

KEY	PART NUMBER	U/M	DESCRIPTION
1*	149402-03-000	EA	ARM - WINDSHIELD WIPER/PANTOGRAPH - RIGHT HAND - 28"
2	146486-01-000	EA	TEE - PLASTIC - 5/32" X 5/32" X 5/32" - ON LEFT SIDE OF WORKHORSE CHASSIS
3	149403-01-000	EA	LINK/CONNECTING-WINDSHIELD WIPER - CLOSED/CLOSED - 24"
4	149409-01-000	EA	MOTOR - WIPER - DYNAMIC PARK
4	149409-02-000	EA	MOTOR - WIPER - COAST TO PARK - WORKHORSE P32 (15,000/18,000) CHASSIS
5	149403-02-000	EA	LINK/CONNECTING-WINDSHIELD WIPER - OPEN/CLOSED GROMMET-24"
6*	149402-04-000	EA	ARM - WINDSHIELD WIPER/PANTOGRAPH - LEFT HAND - 28"
7	149399-01-000	EA	BLADE - WINDSHIELD WIPER - 24"
8	045794-01-000	FT	HOSE - WINDSHIELD WASHER - 5/32"ID - BLACK - ON LEFT SIDE OF WORKHORSE CHASSIS
9	117766-02-000	EA	RESERVOIR/PUMP - WINDSHIELD WASHER - ON LEFT SIDE OF WORKHORSE CHASSIS
10*	149401-02-000	EA	SHAFT & PIVOT ASM. - WINDSHIELD WIPER
11	110742-03-000	EA	GASKET - WIPER
12	145698-01-01A	EA	SHAFT/IDLER - PANTOGRAPH - W/WASHER DIVERTER - STAINLESS
13	149395-01-000	EA	STUD/DOUBLE BALL CRANK - WIPER MOTOR
14	149408-01-000	EA	ARM - DRIVE/WIPER MOTOR

***COMPONENT PARTS LISTED LATER IN THIS GROUP**

COMPONENT PARTS FOR WIPER

149401-01-000,149401-02-000

KEY	PART NUMBER	U/M	DESCRIPTION	VENDOR NO.
	096505-02-703	EA	NUT/ACORN - HD W/.687 BRL	51065-40-NT27WC
	149401-01-700	EA	HARDWARE PKG - F/SHAFT&PIVOT	PSHWKIT
	149401-01-701	EA	SEAL CAP/RUBBER GROMMET	300749

149402-03-000 & 149402-04-000

KEY	PART NUMBER	U/M	DESCRIPTION	VENDOR NO.
	149402-03-700	EA	WASHER NOZZLE KIT W/HDWR	19476
	149402-03-701	EA	COVER/CAP - BLACK	200342

COPYRIGHT © 2007 WINNEBAGO INDUSTRIES INC.