2006
OUTLOOK
WF327L
300-SERIES

PORTSMOUTH OAK
T11 MEADOW GREEN
T12 GINGERSNAP
T13 STONEDUST
TS5 JAGGED RIVER

SIERRA MAPLE
TK0 MEADOW GREEN
TK1 GINGERSNAP
TK2 STONEDUST
TR0 STONEDUST

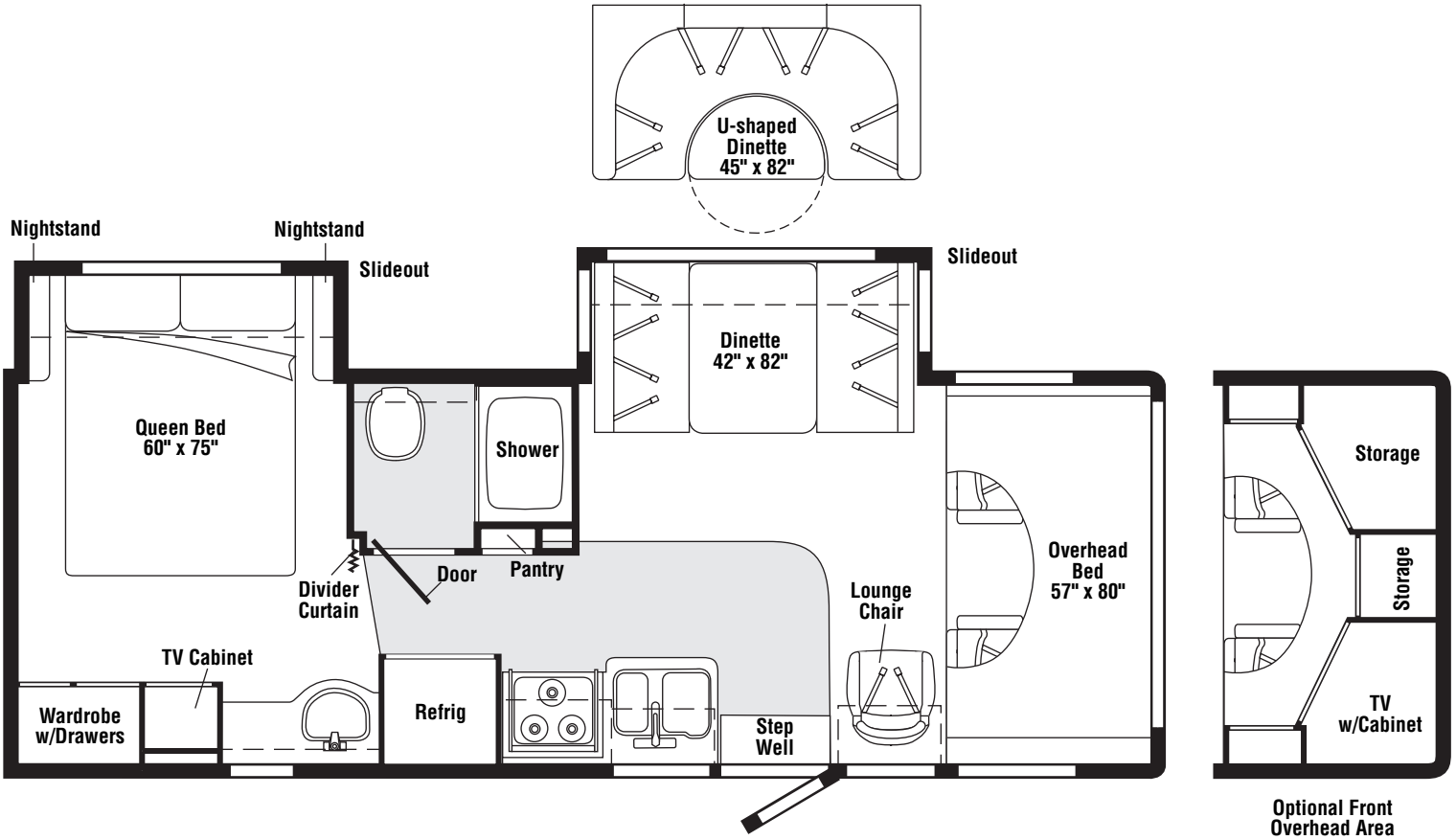

FLOORPLAN

COPYRIGHT © 2006 WINNEBAGO INDUSTRIES INC.

CONTENTS

FLOORPLAN 1
ACCESSORIES GROUP 6
OPERATORS MANUAL 6
AUDIO VIDEO GROUP 7
RADIO SYSTEM 7
COMPONENT PARTS FOR RADIO SYSTEM 7
155619-01-000 7
REAR MONITOR 7
CABINET & APPLIANCE GROUP 8
CABINET & APPLIANCE LAYOUT 8
COMPONENT PARTS FOR CABINET & APPLIANCE LAYOUT 22
114030-04-01A 22
121568-06-01A, 121568-07-01A, 121568-08-01A 24
135065-03-01A, 135065-03-03A, 135065-04-01A 28
136354-02-02A 30
136354-03-02A 31
136354-04-02A 32
136354-05-01A, 136354-05-02A 33
136354-06-01A, 136354-06-02A 33
150606-04-01A, 150606-04-02A 34
151277-01-01A, 151277-02-01A 34
CHASSIS GROUP 38
FRAME 38
EXHAUST 39
HITCH 40
REAR BUMPER 40
FUEL 41
SPARE TIRE 42
SUSPENSION 45
COMPONENT PARTS FOR SUSPENSION 45
144887-02-000 45
156618-01-000 45
WHEEL, TIRE, COVERS &/OR LINERS 46
COMPONENT PARTS FOR WHEEL, TIRE, COVERS &/OR LINERS 46
109443-05-000 46
110435-13-000 46
144647-01-000 46
BRAKELINE 46
CURTAIN & CUSHION GROUP 47
NOTICE 47
CUSHION LAYOUT 48
BUCKET SEATS 51
LOUNGE CHAIR 53
WINDOW TREATMENT 54
HARDWARE 57
ACCESSORIES 58
FABRICS 59
DRIVERS COMPARTMENT GROUP 61
FRONT INTERIOR 61
COMPONENT PARTS FOR FRONT INTERIOR 64
106025-02-01A 64
CABINETS 65

CONTENTS (CONTINUED)

ELECTRICAL GROUP 67
110V BODY WIRING 67
12V BODY WIRING 69
EXTERIOR LAMPS 75
FRONT END 76
FRONT TV/VCR 77
SIDE TV/VCR 78
COMPONENT PARTS FOR WIRING 80
076319-23-000 80
076319-25-000 80
083208-06-000 81
083208-07-000 81
086231-10-000 81
087694-01-000 81
097917-01-06A 81
108354-01-01A 81
120269-07-01A 81
121935-01-01A 81
123775-01-01A 81
123775-01-02A 81
133908-09-01A 81
134940-06-01A 82
134940-07-01A 82
137135-02-000 83
137417-01-01A, 137417-03-01A 84
137417-02-01A 84
137417-05-01A 84
137417-06-01A 84
145641-04-000 84
148231-01-000 84
149040-02-000 84
149925-01-000 84
150089-01-000 84
152441-01-000 84
153658-01-01A/-02A 84
155619-01-000 84
156130-01-000 84
158778-01-000 84
CIRCUIT BREAKERS, FUSES & RELAYS 85
CONVERTER, INVERTER, LOAD CENTERS 86
BOXES & CORDS 87
WIRE ASSEMBLIES 87
CONNECTORS & CONDUIT 88
CHASSIS 90
EXTERIOR BODY GROUP 92
GRAPHICS & PAINT 92
PANELS & TRIMS 95
COMPONENT PARTS FOR PANELS & TRIMS 98
072884-27-000 98
072884-28-000 98
133908-01 THRU 133908-08, 133908-10 THRU 133908-13, 133908-16, 133908-17, -01A/-02A/-03A 99
133908-09-01A 99
STRUCTURAL COMPONENTS 99
AWNINGS 100
COMPONENT PARTS FOR AWNINGS 101
113874-01-02A 101

COPYRIGHT © 2006 WINNEBAGO INDUSTRIES INC.

CONTENTS (CONTINUED)

EXTERIOR DOORS & COMPARTMENTS GROUP 102
DOOR & COMPARTMENT LAYOUT 102
COMPONENT PARTS FOR DOOR & COMPARTMENT LAYOUT 106
084103-08-000 106
094707-03-01A 106
094707-04-01A 107
094708-03-01A 108
COMPARTMENT DOOR PIECE PARTS 109
COMPONENT PARTS FOR COMPARTMENT DOOR PIECE PARTS 113
110506-A1-000, 110506-A2-000, 110506-26-000, 110506-27-000, 110506-36-000 113
ENTRY 113
SCREEN 114
LATCH - ENTRY 115
EXTERIOR SLIDEOUT GROUP 116
FRONT 116
COMPONENT PARTS FOR FRONT SLIDEOUT 121
150661-01-000 121
REAR 122
COMPONENT PARTS FOR REAR SLIDEOUT 125
140464-01-000 125
GENERATOR GROUP 126
HEATING & A/C GROUP 132
FURNACE 132
COMPONENT PARTS FOR FURNACE 133
139980-01-000 133
139980-02-000 133
ROOF 135
COMPONENT PARTS FOR ROOF 135
131184-01-01A 135
131184-05-01A 136
131185-03-01A 137
131188-03-01A 138
131188-04-01A 139
INTERIOR FINISH GROUP 140
MOLDINGS & TRIMS 140
PANELING & LAMINATES 150
INTERIOR TRIM LAYOUT 152
COMPONENT PARTSFOR INTERIOR TRIM LAYOUT 154
089318-05-000 154
094499-02-000 155
115011-03-02A 155
131595-01-01A, 131595-05-01A, 131595-10-01A 156
135615-01-01A 156
135615-02-01A 157
135615-05-01A 157
139047-01-05A, 139047-03-05A, 139047-05-02A/-03A 158
FLOOR COVERINGS 159
HARDWARE 160
LABELS GROUP 166
LP GROUP 172
LP SYSTEM 172
COMPONENT PARTS FOR LP SYSTEM 172
144116-04-000 172

COPYRIGHT © 2006 WINNEBAGO INDUSTRIES INC.

CONTENTS (CONTINUED)

SEALANTS & FASTENERS GROUP 173
SEALANTS & ADHESIVES 173
BOLTS, NUTS AND WASHERS 174
SCREWS 176
CLAMPS, CLIPS, GROMMETS, RIVETS & PLUGS 178
MISCELLANEOUS FASTENERS 180
WATER & SEWAGE GROUP 181
DRAINAGE SYSTEM 181
COMPONENT PARTS FOR DRAINAGE SYSTEM 183
062415-01-000 183
096927-01-02A 183
147421-01-01A, 147421-02-01A 183
WATER SYSTEM 184
COMPONENT PARTS FOR WATER SYSTEM 190
051391-03-000 190
075241-04-000, 075241-05-000, 075241-06-000 191
098607-01-000 191
WINDOW & VENTS GROUP 192
WINDOW & VENT LAYOUT 192
COMPONENT PARTS FOR WINDOW & VENT LAYOUT 194
098644-01-01A 194
098644-07-02A 195
098644-13-01A 196
098644-15-01A 197
098644-16-01A 198
098647-27-02A, 098647-28-02A 199
098647-29-02A, 098647-30-02A 200
098647-31-02A, 098647-32-02A 200
098647-38-02A 200
098647-47-02A 201
098647-49-02A 202
098647-68-01A 202
098647-71 -01A 202
098647-74-01A 203
122882-01-01A 204
122882-02-01A, 122882-03-01A 204
123780-03-01A 205
151075-02-01A 206

COPYRIGHT © 2006 WINNEBAGO INDUSTRIES INC.

ACCESSORIES GROUP

OPERATORS MANUAL

KEY	PART NUMBER	U/M	DESCRIPTION
	152039-01-000	DW	TOP LEVEL-300,2006
	129079-01-01A	EA	CASE - VINYL/BLACK-EXPANDABLE ACCORDION SIDES-7"WX9"HX14"L
	132000-03-006	EA	MANUAL/OWNER - OUTLOOK - 2006
	132000-32-006	EA	MANUAL/OWNER - OUTLOOK SE - 2006 - SPECIAL EDITION
	155005-03-006	EA	MANUAL/OWNER - SUPPLEMENT - OUTLOOK - 2006
	155005-44-006	EA	MANUAL/OWNER - SUPPLEMENT - OUTLOOK SE - 2006 - SPECIAL EDITION

COPYRIGHT © 2006 WINNEBAGO INDUSTRIES INC.

AUDIO VIDEO GROUP

RADIO SYSTEM

KEY	PART NUMBER	U/M	DESCRIPTION
	108137-01-000	EA	PLUG - ANTENNA
	135420-05-000	EA	MOUNTING KIT - RADIO - FORD
	135420-10-000	EA	REMOTE CONTROL/RADIO (CREDIT CARD SIZE) FROM: 00-00-00 THRU: 05-29-05
	135420-19-000	EA	REMOTE CONTROL/RADIO (CREDIT CARD SIZE) FROM: 05-30-05 THRU: 99-99-99
	135420-11-000	EA	REMOTE CONTROL/RADIO (STEERING WHEEL MOUNT) FROM: 00-00-00 THRU: 05-29-05
	135420-18-000	EA	REMOTE CONTROL/RADIO (STEERING WHEEL MOUNT) FROM: 05-30-05 THRU: 99-99-99
	135420-13-000	EA	RADIO-AM/FM/CASS/CD COMBO-AUX/CD CHANGER INPUT-W/O REMOTE FROM: 00-00-00 THRU: 05-29-05
	135420-15-000	EA	RADIO-AM/FM/CD/SIRIUS SATELLITE READY-W/O REMOTES/WIRE ASM FROM: 05-30-05 THRU: 99-99-99
*	155619-01-000	EA	RADIO - AM/FM CD - W/REMOTE - MAGNADYNE M3200CD - SPECIAL EDITION
	135420-14-000	EA	RECEIVER (EYE) - INFRARED
	135420-20-000	EA	RECEIVER - SATELLITE RADIO - W/CABLE FROM: 05-30-05 THRU: 99-99-99
	152780-01-000	EA	ANTENNA/SATELLITE - RADIO/SIRIUS FROM: 00-00-00 THRU: 12-11-05
	158494-01-000	EA	ANTENNA/SATELLITE - RADIO/SIRIUS FROM: 12-12-05 THRU: 99-99-99
	152780-02-000	EA	CABLE/ANTENNA - SATELLITE RADIO SIRRUS FROM: 00-00-00 THRU: 12-11-05
	158494-02-000	EA	CABLE/ANTENNA - SATELLITE RADIO SIRRUS FROM: 12-12-05 THRU: 99-99-99

***COMPONENT PARTS LISTED LATER IN THIS GROUP**

COMPONENT PARTS FOR RADIO SYSTEM

155619-01-000

KEY	PART NUMBER	U/M	DESCRIPTION	VENDOR NO.
	155619-01-700	EA	REMOTE	RC3200

REAR MONITOR

KEY	PART NUMBER	U/M	DESCRIPTION
	136514-02-000	EA	CABLE - MONITOR/CAMERA
	144677-04-000	EA	CAMERA - REAR VIEW W/BRACKET - BLACK & WHITE - VBCS150
	150079-02-000	EA	SUNVISOR W/MONITOR/LCD - 5.6" - NO AUDIO - (FORD) - 2004 FORD CHASSIS
	156442-01-01A	EA	MONITOR/LCD - 5.6" - NO AUDIO - PLASTIC POD MOUNT - TAN - 2006 FORD CHASSIS
	156930-01-01A	EA	MONITOR/LCD - 5.6" - NO AUDIO - PLASTIC POD MOUNT - TAN - CHEVY

COPYRIGHT © 2006 WINNEBAGO INDUSTRIES INC.

CABINET & APPLIANCE GROUP

CABINET & APPLIANCE LAYOUT

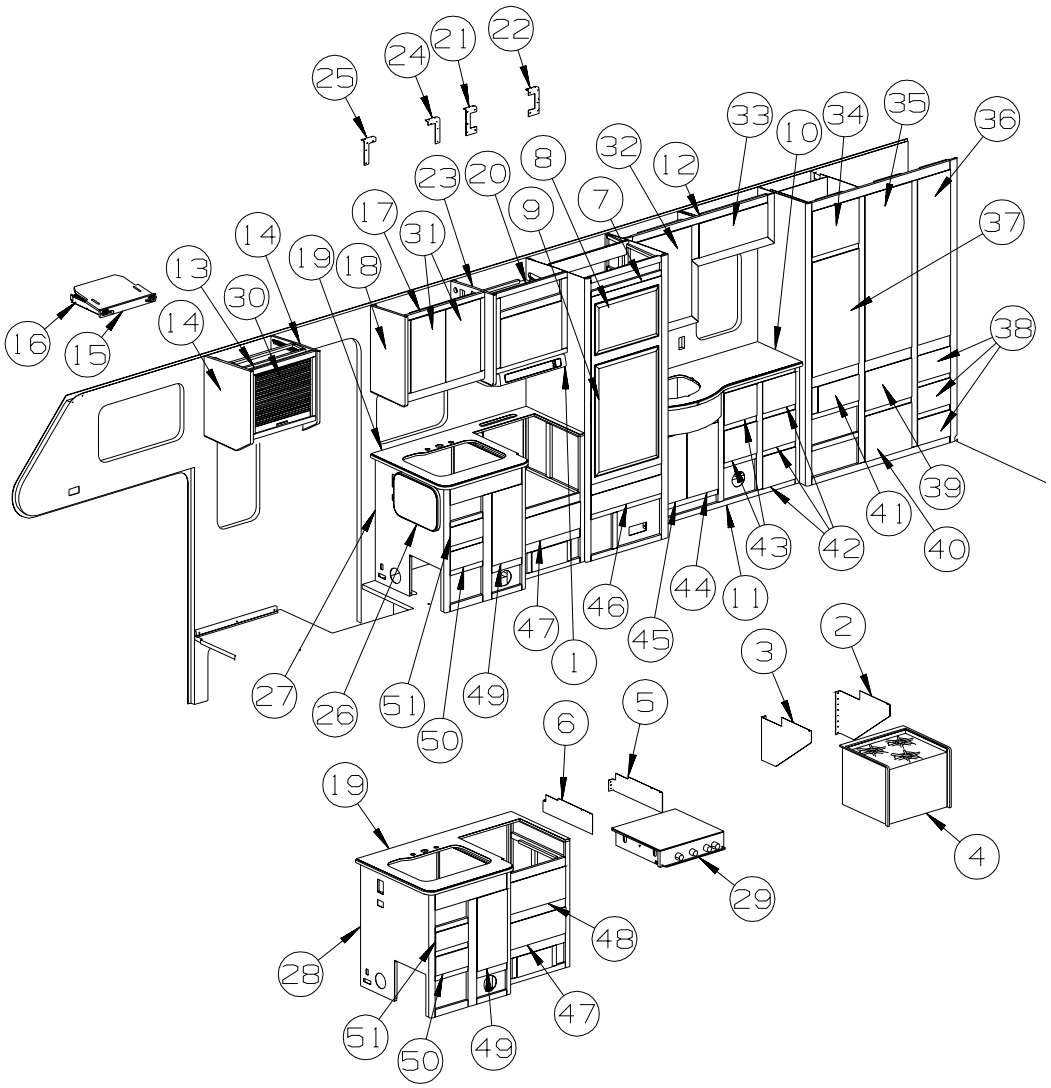

KEY	PART NUMBER	U/M	DESCRIPTION
1*	136354-05-01A	EA	HOOD - RANGE - W/LITE/FAN - BLACK TEXTURED - UL
1*	136354-06-01A	EA	HOOD - RANGE - W/LITE/FAN - BLACK TEXTURED - CSA - CANADIAN
2	140176-07-01B	EA	BRACKET/TIEDOWN - STOVE
3	140176-08-01B	EA	BRACKET/TIEDOWN - STOVE
4*	151277-01-01A	EA	RANGE-16"-3 BURNER - MERCURY FREE - BLACK DOOR/TEXTURED
5	142139-13-02B	EA	BRACKET/TIEDOWN - STOVE - E-COATED - RANGE TOP 3-BURNER
6	142139-14-02B	EA	BRACKET/TIEDOWN - STOVE - E-COATED - RANGE TOP 3-BURNER
7*	121568-06-01A	EA	REFRIGERATOR - SMALL DBL DOOR-RH/2 WAY- 52.8"HX23.5"WX24"D
	054450-01-000	EA	LEVEL - REFRIGERATOR
	090329-01-000	FT	SEAL - “T” - REFRIGERATOR CABINET
	116751-02-01A	EA	TRAY - REFRIGERATOR - BLACK
8	P34457-03-N47	EA	PANEL - INSERT RAISED MEMBRANE-21.5"X14.5" - PORTSMOUTH OAK - DELUXE FEATURE PACKAGE
8	P34457-03-SA3	EA	PANEL - INSERT RAISED MEMBRANE - 21.5" X 14.5" - SIERRA MAPLE - DELUXE FEATURE PACKAGE
9	P34457-74-T11	EA	PANEL - INSERT RAISED MEMBRANE-21.5"X31.5" - PORTSMOUTH OAK - DELUXE FEATURE PACKAGE
9	P34457-74-TK0	EA	PANEL - INSERT RAISED MEMBRANE - 21.5" X 31.5" - SIERRA MAPLE - DELUXE FEATURE PACKAGE
10	133654-42-T11	EA	COUNTERTOP - LAMINATED - HYBRID SLATE/PORTSMOUTH OAK
10	133654-42-T12	EA	COUNTERTOP - LAMINATED - BRONZE LEGACY/PORTSMOUTH OAK
10	133654-42-T13	EA	COUNTERTOP - LAMINATED - NEXUS SAND/PORTSMOUTH OAK
10	133654-42-TK0	EA	COUNTERTOP - LAMINATED - HYBRID SLATE/SIERRA MAPLE
10	133654-42-TK1	EA	COUNTERTOP - LAMINATED - BRONZE LEGACY/SIERRA MAPLE
10	133654-42-TK2	EA	COUNTERTOP - LAMINATED - NEXUS SAND/SIERRA MAPLE
11	P50928-01-S01	EA	CABINET - VANITY - W/O COUNTERTOP/DOORS/DRAWERS/HDW - PORTSMOUTH OAK
11	P50928-01-S88	EA	CABINET - VANITY - W/O COUNTERTOP/DOORS/DRAWERS/HDWM - SIERRA MAPLE
12	150935-01-S01	EA	CABINET - OVERHEAD/VANITY - W/O DOORS/HARDWARE - PORTSMOUTH OAK
12	150935-01-S88	EA	CABINET - OVERHEAD/VANITY - W/O DOORS/HARDWARE - SIERRA MAPLE

COPYRIGHT © 2006 WINNEBAGO INDUSTRIES INC.

CABINET & APPLIANCE GROUP (CONTINUED)

CABINET & APPLIANCE LAYOUT (CONTINUED)

KEY	PART NUMBER	U/M	DESCRIPTION
13	149638-02-S01	EA	CABINET - OVERHEAD/STORAGE - W/O TV SLIDE - W/TAMBOUR DOOR - PORTSMOUTH OAK
13	149638-02-S88	EA	CABINET - OVERHEAD/STORAGE - W/O TV SLIDE - W/TAMBOUR DOOR - SIERRA MAPLE
13	149638-01-S01	EA	CABINET - OVERHEAD/TV - W/TAMBOUR DOOR - PORTSMOUTH OAK - TV-13" W/DVD-12V FROM: 00-00-00 THRU: 03-19-06
13	159769-01-T11	EA	CABINET - OVERHEAD/TV - W/TAMBOUR DOOR - PORTSMOUTH OAK - TV-13" W/DVD-12V FROM: 03-20-06 THRU: 99-99-99
13	149638-01-S88	EA	CABINET - OVERHEAD/TV - W/TAMBOUR DOOR - SIERRA MAPLE - TV-13" W/DVD-12V FROM: 00-00-00 THRU: 03-19-06
13	159769-01-TK0	EA	CABINET - OVERHEAD/TV - W/TAMBOUR DOOR - SIERRA MAPLE - TV-13" W/DVD-12V FROM: 03-20-06 THRU: 99-99-99
13	142912-01-P13	EA	CABINET-OVHD/FRT/PASS-W/O DRS/HDW - PORTSMOUTH OAK - TV-24" COLOR,STEREO W/REMOTE
13	142912-01-S88	EA	CABINET-OVHD/FRT/PASSNGR-W/O DRS/HDW - SIERRA MAPLE - TV-24" COLOR,STEREO W/REMOTE
14	140307-11-P07	EA	END CAP - OVERHEAD CABINET - PORTSMOUTH OAK
14	140307-11-S88	EA	END CAP - OVERHEAD CABINET - SIERRA MAPLE
14	140307-11-P07	EA	END CAP - OVERHEAD CABINET - PORTSMOUTH OAK - TV-13" W/DVD-12V FROM: 00-00-00 THRU: 03-19-06
14	140307-61-T11	EA	END CAP - OVERHEAD CABINET - PORTSMOUTH OAK - TV-13" W/DVD-12V, LEFT HAND FROM: 03-20-06 THRU: 99-99-99
14	140307-63-T11	EA	END CAP - OVERHEAD CABINET - PORTSMOUTH OAK - TV-13" W/DVD-12V, RIGHT HAND FROM: 03-20-06 THRU: 99-99-99
14	140307-11-S88	EA	END CAP - OVERHEAD CABINET - SIERRA MAPLE - TV-13" W/DVD-12V FROM: 00-00-00 THRU: 03-19-06
14	140307-61-TK0	EA	END CAP - OVERHEAD CABINET - SIERRA MAPLE - TV-13" W/DVD-12V, LEFT HAND FROM: 03-20-06 THRU: 99-99-99
14	140307-63-TK0	EA	END CAP - OVERHEAD CABINET - SIERRA MAPLE - TV-13" W/DVD-12V, RIGHT HAND FROM: 03-20-06 THRU: 99-99-99
14	140307-17-P13	EA	END CAP - OVERHEAD CABINET - PORTSMOUTH OAK - TV-24" COLOR,STEREO W/REMOTE
14	140307-17-SW0	EA	END CAP - OVERHEAD CABINET - SIERRA MAPLE - TV-24" COLOR,STEREO W/REMOTE
15	149638-18-S01	EA	SHELF - W/SLIDE AND SWIVEL - PORTSMOUTH OAK - TV-13" W/DVD-12V FROM: 00-00-00 THRU: 03-19-06
15	159769-18-T11	EA	SHELF - W/SLIDE AND SWIVEL - PORTSMOUTH OAK - TV-13" W/DVD-12V FROM: 03-20-06 THRU: 99-99-99
15	149638-18-S88	EA	SHELF - W/SLIDE AND SWIVEL - SIERRA MAPLE - TV-13" W/DVD-12V FROM: 00-00-00 THRU: 03-19-06
15	159769-18-TK0	EA	SHELF - W/SLIDE AND SWIVEL - SIERRA MAPLE - TV-13" W/DVD-12V FROM: 03-20-06 THRU: 99-99-99
	091261-01-000	EA	SLIPNOT - ANTISLIP - 1' WIDE X 12' - BLACK - TV-13" W/DVD-12V
16	116773-02-000	EA	SWIVEL/SLIDES - F/TV SHELF - 17.9"D X 1.6"H X 15.3"W - TV-13" W/DVD-12V
17	150907-03-T11	EA	CABINET - OVERHEAD/GALLEY - W/O DOORS/HDW - PORTSMOUTH OAK
17	150907-03-TK0	EA	CABINET - OVERHEAD/GALLEY - W/O DOORS/HDW - SIERRA MAPLE
17	150907-02-S01	EA	CABINET - OVRHD/GALLEY-W/O DRS/HDW - PORTSMOUTH OAK - TV-24" COLOR,STEREO W/REMOTE
17	150907-02-S88	EA	CABINET - OVERHEAD/GALLEY-W/O DRS/HDW - SIERRA MAPLE - TV-24" COLOR,STEREO W/REMOTE
18	140307-06-P10	EA	END CAP - OVERHEAD CABINET - PORTSMOUTH OAK
18	140307-06-S88	EA	END CAP - OVERHEAD CABINET - SIERRA MAPLE
19	133653-43-T11	EA	COUNTERTOP - LAMINATED - HYBRID SLATE/PORTSMOUTH OAK
19	133653-43-T12	EA	COUNTERTOP - LAMINATED - BRONZE LEGACY/PORTSMOUTH OAK
19	133653-43-T13	EA	COUNTERTOP - LAMINATED - NEXUS SAND/PORTSMOUTH OAK
19	133653-43-TK0	EA	COUNTERTOP - LAMINATED - HYBRID SLATE/SIERRA MAPLE
19	133653-43-TK1	EA	COUNTERTOP - LAMINATED - BRONZE LEGACY/SIERRA MAPLE
19	133653-43-TK2	EA	COUNTERTOP - LAMINATED - NEXUS SAND/SIERRA MAPLE
19	133653-59-T11	EA	COUNTERTOP - LAMINATED - HYBRID SLATE/PORTSMOUTH OAK - DELUXE FEATURE PACKAGE
19	133653-59-T12	EA	COUNTERTOP - LAMINATED - BRONZE LEGACY/PORTSMOUTH OAK - DELUXE FEATURE PACKAGE
19	133653-59-T13	EA	COUNTERTOP - LAMINATED - NEXUS SAND/PORTSMOUTH OAK - DELUXE FEATURE PACKAGE
19	133653-59-TK0	EA	COUNTERTOP - LAMINATED - HYBRID SLATE/SIERRA MAPLE - DELUXE FEATURE PACKAGE
19	133653-59-TK1	EA	COUNTERTOP - LAMINATED - BRONZE LEGACY/SIERRA MAPLE - DELUXE FEATURE PACKAGE
19	133653-59-TK2	EA	COUNTERTOP - LAMINATED - NEXUS SAND/SIERRA MAPLE - DELUXE FEATURE PACKAGE

COPYRIGHT © 2006 WINNEBAGO INDUSTRIES INC.

CABINET & APPLIANCE GROUP (CONTINUED)

CABINET & APPLIANCE LAYOUT (CONTINUED)

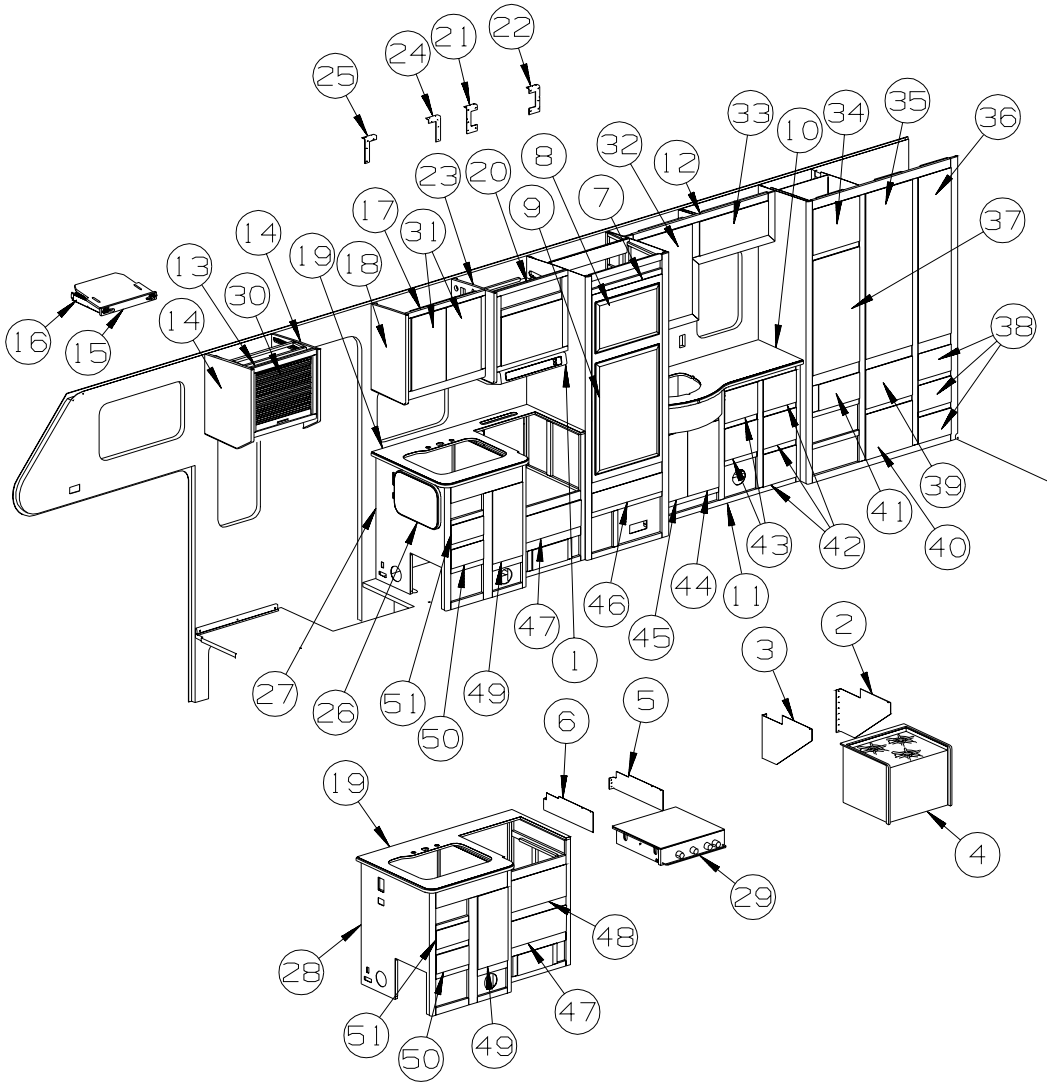

KEY	PART NUMBER	U/M	DESCRIPTION
20	153364-06-T11	EA	CABINET - OVERHEAD/MICROWAVE - W/O DOORS/HDW
20	153364-06-T12	EA	CABINET - OVERHEAD/MICROWAVE - W/O DOORS/HDW
20	153364-06-T13	EA	CABINET - OVERHEAD/MICROWAVE - W/O DOORS/HDW
20	153364-06-TK0	EA	CABINET - OVERHEAD/MICROWAVE - W/O DOORS/HDW
20	153364-06-TK1	EA	CABINET - OVERHEAD/MICROWAVE - W/O DOORS/HDW
20	153364-06-TK2	EA	CABINET - OVERHEAD/MICROWAVE - W/O DOORS/HDW
20	153364-08-T11	EA	CABINET - OVERHEAD/MICROWAVE - W/O DOORS/HDW - TV-24" COLOR,STEREO W/REMOTE
20	153364-08-T12	EA	CABINET - OVERHEAD/MICROWAVE - W/O DOORS/HDW - TV-24" COLOR,STEREO W/REMOTE
20	153364-08-T13	EA	CABINET - OVERHEAD/MICROWAVE - W/O DOORS/HDW - TV-24" COLOR,STEREO W/REMOTE
20	153364-08-TK0	EA	CABINET - OVERHEAD/MICROWAVE - W/O DOORS/HDW - TV-24" COLOR,STEREO W/REMOTE
20	153364-08-TK1	EA	CABINET - OVERHEAD/MICROWAVE - W/O DOORS/HDW - TV-24" COLOR,STEREO W/REMOTE
20	153364-08-TK2	EA	CABINET - OVERHEAD/MICROWAVE - W/O DOORS/HDW - TV-24" COLOR,STEREO W/REMOTE
20	149584-54-T11	EA	CABT-OVHD/MICRO-W/O DR - MICROWAVE/CONVECTION OVEN, TV-24" COLOR,STEREO W/REMOTE
20	149584-54-T12	EA	CABT-OVHD/MICRO-W/O DR - MICROWAVE/CONVECTION OVEN, TV-24" COLOR,STEREO W/REMOTE
20	149584-54-T13	EA	CABT-OVHD/MICRO-W/O DR - MICROWAVE/CONVECTION OVEN, TV-24" COLOR,STEREO W/REMOTE
20	149584-54-TK0	EA	CABT-OVHD/MICRO-W/O DR - MICROWAVE/CONVECTION OVEN, TV-24" COLOR,STEREO W/REMOTE
20	149584-54-TK1	EA	CABT-OVHD/MICRO-W/O DR - MICROWAVE/CONVECTION OVEN, TV-24" COLOR,STEREO W/REMOTE
20	149584-54-TK2	EA	CABT-OVHD/MICRO-W/O DR - MICROWAVE/CONVECTION OVEN, TV-24" COLOR,STEREO W/REMOTE
20	149584-55-T11	EA	CABINET - OVERHEAD/MICROWAVE - W/O DOORS/HARDWARE - MICROWAVE/CONVECTION OVEN
20	149584-55-T12	EA	CABINET - OVERHEAD/MICROWAVE - W/O DOORS/HARDWARE - MICROWAVE/CONVECTION OVEN
20	149584-55-T13	EA	CABINET - OVERHEAD/MICROWAVE - W/O DOORS/HARDWARE - MICROWAVE/CONVECTION OVEN
20	149584-55-TK0	EA	CABINET - OVERHEAD/MICROWAVE - W/O DOORS/HARDWARE - MICROWAVE/CONVECTION OVEN
20	149584-55-TK1	EA	CABINET - OVERHEAD/MICROWAVE - W/O DOORS/HARDWARE - MICROWAVE/CONVECTION OVEN
20	149584-55-TK2	EA	CABINET - OVERHEAD/MICROWAVE - W/O DOORS/HARDWARE - MICROWAVE/CONVECTION OVEN

COPYRIGHT © 2006 WINNEBAGO INDUSTRIES INC.

CABINET & APPLIANCE GROUP (CONTINUED)

CABINET & APPLIANCE LAYOUT (CONTINUED)

KEY	PART NUMBER	U/M	DESCRIPTION
21	098916-37-02B	EA	BRACE - MICROWAVE CABINET - LEFT HAND - E-COATED
22	098916-38-02B	EA	BRACE - MICROWAVE CABINET - RIGHT HAND - E-COATED
23	140307-40-R13	EA	END CAP - OVERHEAD CABINET - PORTSMOUTH OAK
23	140307-40-SJ0	EA	END CAP - OVERHEAD CABINET - SIERRA MAPLE
24	149420-05-02B	EA	BRACE - MICROWAVE - E-COATED - MICROWAVE/CONVECTION OVEN
25	149420-06-02B	EA	BRACE - MICROWAVE - E-COATED - MICROWAVE/CONVECTION OVEN
26	144585-02-T11	EA	EXTENSION - GALLEY - HYBRID SLATE/PORTSMOUTH OAK (T11)
26	144585-02-T12	EA	EXTENSION - GALLEY - BRONZE LEGACY/PORTSMOUTH OAK (T12)
26	144585-02-T13	EA	EXTENSION - GALLEY - NEXUS SAND/PORTSMOUTH OAK (T13)
26	144585-02-S37	EA	EXTENSION - GALLEY - HYBRID SLATE/SIERRA MAPLE (TK0)
26	144585-02-S35	EA	EXTENSION - GALLEY - BRONZE LEGACY/SIERRA MAPLE (TK1)
26	144585-02-TK2	EA	EXTENSION - GALLEY - NEXUS SAND/SIERRA MAPLE (TK2)
27	P49951-01-S01	EA	CABINET - GALLEY - W/O COUNTERTOP/DOORS/DRAWERS/HDW - PORTSMOUTH OAK
27	P49951-01-S88	EA	CABINET - GALLEY - W/O COUNTERTOP/DOORS/DRAWERS/HDW - SIERRA MAPLE
27	P49951-02-S01	EA	CABINET - GALLEY - W/O C-TOP/DRS/DRAWERS/HDW - PORTSMOUTH OAK - ENTRANCE STEP-ELEC.
27	P49951-02-S88	EA	CABINET - GALLEY - W/O C-TOP/DOORS/DRAWERS/HDW - SIERRA MAPLE - ENTRANCE STEP-ELEC.
27	P49951-03-S01	EA	CABINET - GALLEY - W/O C-TOP/DRS/DRAWERS/HDW - PORTSMOUTH OAK - RADIOS TWO-WAY (4)
27	P49951-03-S88	EA	CABINET - GALLEY - W/O C-TOP/DOORS/DRAWERS/HDW - SIERRA MAPLE - RADIOS TWO-WAY (4)
27	P49951-04-S01	EA	CABT-GLY-W/O C-TOP/DRWRS - PORTSMOUTH OAK - ENTRANCE STEP-ELEC., RADIOS TWO-WAY (4)
27	P49951-04-S88	EA	CABT-GLY-W/O C-TOP/DR/DRWRS - SIERRA MAPLE - ENTRANCE STEP-ELEC., RADIOS TWO-WAY (4)
28	P49951-05-T11	EA	CABINET - GALLEY - W/O C-TOP/DRS/DRAWERS/HDW - PORTSMOUTH OAK - RANGE TOP 3-BURNER
28	P49951-05-TK0	EA	CABINET - GALLEY - W/O C-TOP/DOORS/DRAWERS/HDW - SIERRA MAPLE - RANGE TOP 3-BURNER
28	P49951-06-T11	EA	CABT-GLY-W/O C-TOP/DRWS - PORTSMOUTH OAK - RANGE TOP 3-BURNER, ENTRANCE STEP-ELEC.
28	P49951-06-TK0	EA	CABT-GLY-W/O C-TOP/DR/DRWS - SIERRA MAPLE - RANGE TOP 3-BURNER, ENTRANCE STEP-ELEC.
28	P49951-07-T11	EA	CABT-GLY-W/O C-TOP//DRWRS - PORTSMOUTH OAK - RANGE TOP 3-BURNER, RADIOS TWO-WAY (4)
28	P49951-07-TK0	EA	CABT-GLY-W/O C-TOP/DRS/DRWRS - SIERRA MAPLE - RANGE TOP 3-BURNER, RADIOS TWO-WAY (4)
28	P49951-08-T11	EA	CABT - PORTSMOUTH OAK - RANGE TOP 3-BURNER, ENTRANCE STEP-ELEC., RADIOS TWO-WAY (4)
28	P49951-08-TK0	EA	CABINET - SIERRA MAPLE - RANGE TOP 3-BURNER, ENTRANCE STEP-ELEC., RADIOS TWO-WAY (4)
29*	114030-04-01A	EA	RANGE - 3 BRNR TOP/NEW STYLE KNOBS/GRATES-W/O OVEN-BLK - RANGE TOP 3-BURNER
30	136954-D0-T11	EA	DOOR-RSED PNL/OGEE EDGE-15.7"X20.5" - PORTSMOUTH OAK - TV-24" COLOR,STEREO W/REMOTE
30	136954-D0-TK0	EA	DOOR-RAISED PNL/OGEE EDGE-15.7" X 20.5" - SIERRA MAPLE - TV-24" COLOR,STEREO W/REMOTE
31	136954-67-T11	EA	DOOR - RAISED PANEL/OGEE EDGE - 12" X 21.9" - W/O HDW - PORTSMOUTH OAK
31	136954-67-TK0	EA	DOOR - RAISED PANEL/OGEE EDGE - 12" X 21.9" - W/O HDW - SIERRA MAPLE
32	145576-A5-T11	EA	DOOR - MIRRORED - 20.8" X 25.9" - W/O HARDWARE - PORTSMOUTH OAK
32	145576-A5-TK0	EA	DOOR - MIRRORED - 20.8" X 25.9" - W/O HARDWARE - SIERRA MAPLE
	093606-47-000	EA	MIRROR - BEVELED EDGE - 20.8" X 25.9"
33	136954-43-T11	EA	DOOR - RAISED PANEL/OGEE EDGE - 10.8" X 23.8" - W/O HDW - PORTSMOUTH OAK
33	136954-43-TK0	EA	DOOR - RAISED PANEL/OGEE EDGE - 10.8" X 23.8" - W/O HDW - SIERRA MAPLE
34	145268-38-T11	EA	DOOR - RAISED PANEL/OGEE EDGE - 16.7" X 13.8" - W/O HDW - PORTSMOUTH OAK
34	145268-38-TK0	EA	DOOR - RAISED PANEL/OGEE EDGE - 16.7" X 13.8" - W/O HDW - SIERRA MAPLE
35	141506-03-T53	EA	DOOR - MIRRORED/OGEE EDGE - 16.7" X 48" - W/O HDW - PORTSMOUTH OAK
35	141506-03-TK0	EA	DOOR - MIRRORED/OGEE EDGE - 16.7" X 48" - W/O HDW - SIERRA MAPLE
36	136954-76-T11	EA	DOOR - RAISED PANEL/OGEE EDGE - 12" X 48" - W/O HDW - PORTSMOUTH OAK
36	136954-76-TK0	EA	DOOR - RAISED PANEL/OGEE EDGE - 12" X 48" - W/O HDW - SIERRA MAPLE
37	145268-39-T11	EA	DOOR - RAISED PANEL/OGEE EDGE - 16.7" X 33.4" - W/O HDW - PORTSMOUTH OAK
37	145268-39-TK0	EA	DOOR - RAISED PANEL/OGEE EDGE - 16.7" X 33.4" - W/O HDW - SIERRA MAPLE
38	153121-H7-T53	EA	DRAWER - OGEE EDGE - 10"W X 17.7"D - W/O SLIDES/HDW - PORTSMOUTH OAK
38	153121-H7-T23	EA	DRAWER - OGEE EDGE - 10"W X 17.7"D - W/O SLIDES/HDW - SIERRA MAPLE
39	153121-H5-T53	EA	DRAWER - OGEE EDGE - 14.7"W X 17.7"D - W/O SLIDES/HDW - PORTSMOUTH OAK
39	153121-H5-T23	EA	DRAWER - OGEE EDGE - 14.7"W X 17.7"D - W/O SLIDES/HDW - SIERRA MAPLE
40	153121-Y6-T11	EA	DRAWER - OGEE EDGE - 15.1"W X 11.8"D - W/O SLIDES/HDW - PORTSMOUTH OAK
40	153121-Y6-TK0	EA	DRAWER - OGEE EDGE - 15.1"W X 11.8"D - W/O SLIDES/HDW - SIERRA MAPLE
41	153121-Y4-T11	EA	DRAWER - OGEE EDGE - 12.7"W X 13.8"D - W/O SLIDES/HDW - PORTSMOUTH OAK
41	153121-Y4-TK0	EA	DRAWER - OGEE EDGE - 12.7"W X 13.8"D - W/O SLIDES/HDW - SIERRA MAPLE
42	153121-Y8-T11	EA	DRAWER - OGEE EDGE - 10"W X 11.8"D - W/O SLIDES/HDW - PORTSMOUTH OAK
42	153121-Y8-TK0	EA	DRAWER - OGEE EDGE - 10"W X 11.8"D - W/O SLIDES/HDW - SIERRA MAPLE
43	153121-Z0-T11	EA	DRAWER - OGEE EDGE - 10"W X 13.8"D - W/O SLIDES/HDW - PORTSMOUTH OAK
43	153121-Z0-TK0	EA	DRAWER - OGEE EDGE - 10"W X 13.8"D - W/O SLIDES/HDW - SIERRA MAPLE
44	136918-45-T11	EA	DOOR - FLAT/OGEE EDGE - 10.8" X 23.8" - W/O HARDWARE - PORTSMOUTH OAK
44	136918-45-TK0	EA	DOOR - FLAT/OGEE EDGE - 10.8" X 23.8" - W/O HARDWARE - SIERRA MAPLE
45	136918-44-T11	EA	DOOR - FLAT/OGEE EDGE - 10.8" X 23.8" - W/O HARDWARE - PORTSMOUTH OAK
45	136918-44-TK0	EA	DOOR - FLAT/OGEE EDGE - 10.8" X 23.8" - W/O HARDWARE - SIERRA MAPLE

COPYRIGHT © 2006 WINNEBAGO INDUSTRIES INC.

CABINET & APPLIANCE GROUP (CONTINUED)

CABINET & APPLIANCE LAYOUT (CONTINUED)

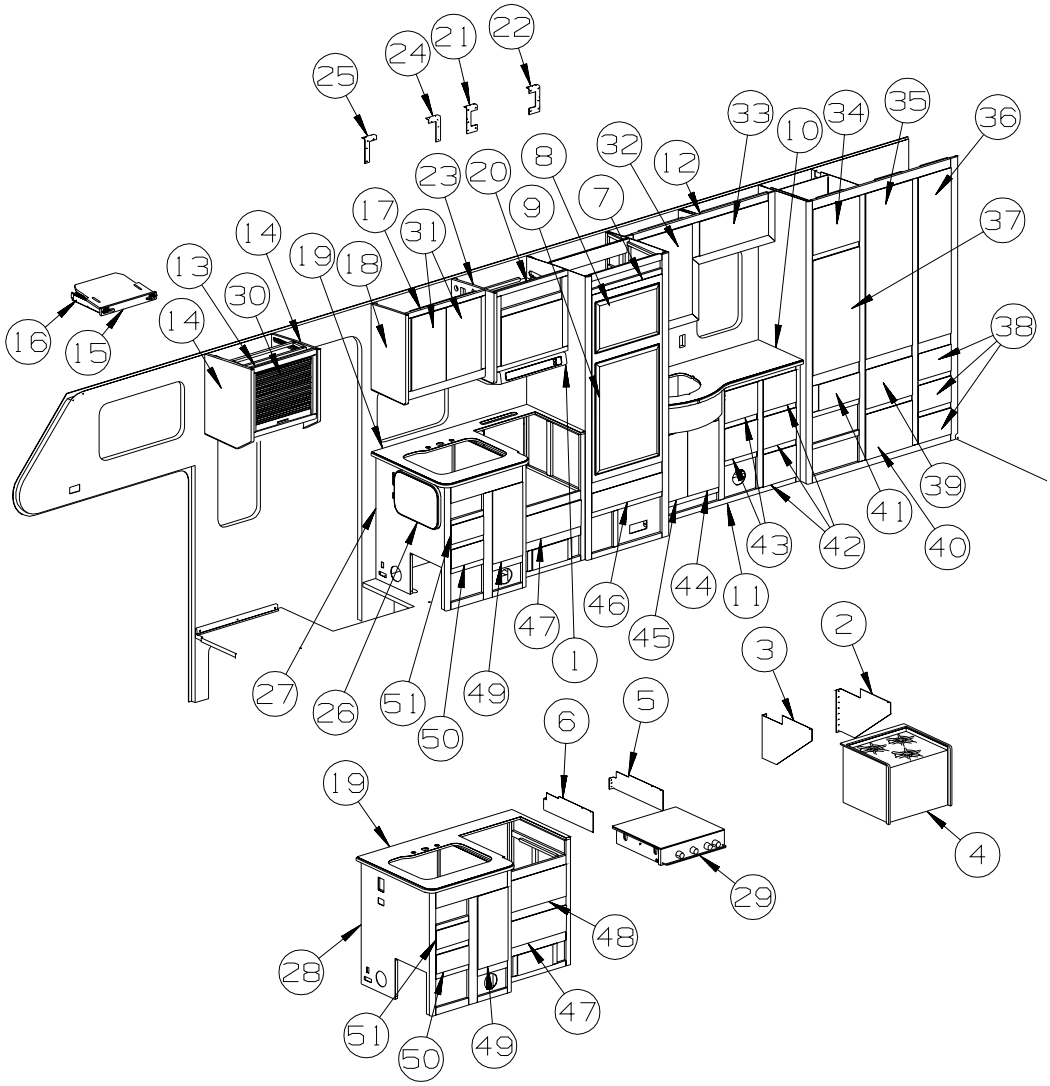

KEY	PART NUMBER	U/M	DESCRIPTION
46	153121-Z2-T11	EA	DRAWER - OGEE EDGE - 22.6"W X 13.8"D - W/O SLIDES/HDW - PORTSMOUTH OAK
46	153121-Z2-TK0	EA	DRAWER - OGEE EDGE - 22.6"W X 13.8"D - W/O SLIDES/HDW - SIERRA MAPLE
47	153121-Z4-T11	EA	DRAWER - OGEE EDGE - 19.8"W X 17.7"D - W/O SLIDES/HDW - PORTSMOUTH OAK
47	153121-Z4-TK0	EA	DRAWER - OGEE EDGE - 19.8"W X 17.7"D - W/O SLIDES/HDW - SIERRA MAPLE
48	153121-N4-T53	EA	DRAWER-OGEE EDGE-19.8"WX11.8"D-W/O SLDS/HDW - PORTSMOUTH OAK - RANGE TOP 3-BURNER
48	153121-N4-TL0	EA	DRAWER - OGEE EDGE -19.8"W X 11.8"D-W/O SLIDES/HDW - SIERRA MAPLE - RANGE TOP 3-BURNER
49	136918-60-T11	EA	DOOR - FLAT/OGEE EDGE - 11.4" X 21.8" - W/O HARDWARE - PORTSMOUTH OAK
49	136918-60-TK0	EA	DOOR - FLAT/OGEE EDGE - 11.4" X 21.8" - W/O HARDWARE - SIERRA MAPLE
50	153121-Z6-T11	EA	DRAWER - OGEE EDGE - 10"W X 13.8"D - W/O SLIDES/HDW - PORTSMOUTH OAK
50	153121-Z6-TK0	EA	DRAWER - OGEE EDGE - 10"W X 13.8"D - W/O SLIDES/HDW - SIERRA MAPLE
51	153121-L2-T53	EA	DRAWER - OGEE EDGE - 9.6"W X 19.7"D - W/O SLIDES/HDW - PORTSMOUTH OAK
51	153121-L2-TL0	EA	DRAWER - OGEE EDGE - 9.6"W X 19.7"D - W/O SLIDES/HDW - SIERRA MAPLE

***COMPONENT PARTS LISTED LATER IN THIS GROUP**

COPYRIGHT © 2006 WINNEBAGO INDUSTRIES INC.

CABINET & APPLIANCE GROUP (CONTINUED)

CABINET & APPLIANCE LAYOUT (CONTINUED)

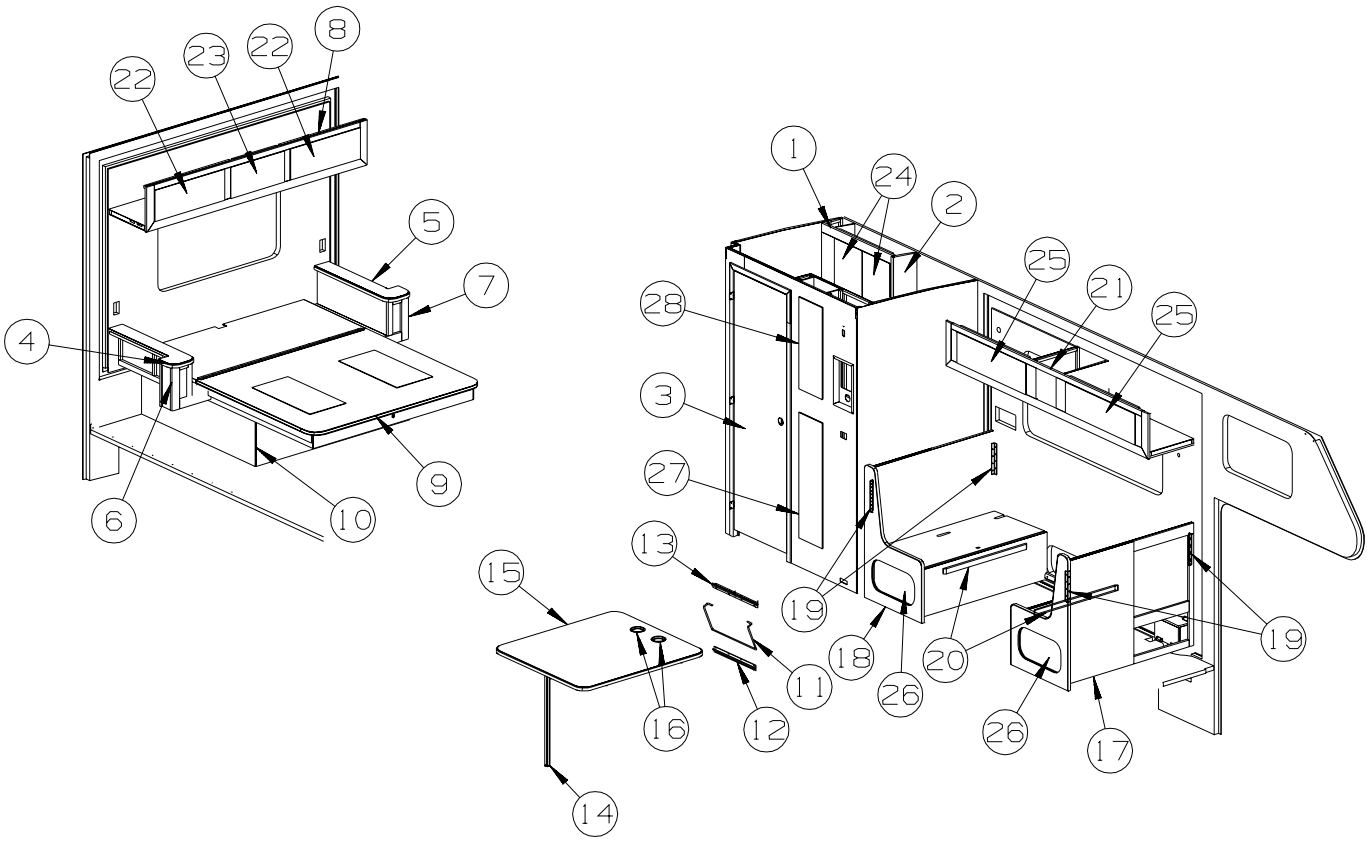

KEY	PART NUMBER	U/M	DESCRIPTION
1	155156-01-T11	EA	CABINET - OVERHEAD/LINEN - W/O DOORS/HDW - PORTSMOUTH OAK
1	155156-01-TK0	EA	CABINET - OVERHEAD/LINEN - W/O DOORS/HDW - SIERRA MAPLE
2	140307-49-T11	EA	END CAP - OVERHEAD CABINET - PORTSMOUTH OAK
2	140307-49-T11	EA	END CAP - OVERHEAD CABINET - SIERRA MAPLE
3	144645-02-R32	EA	DOOR - BATH - W/O FRAME (PICTURE)/TOWEL RACK/HDW - PORTSMOUTH OAK
3	144645-02-S88	EA	DOOR - BATH - W/O FRAME (PICTURE)/TOWEL RACK/HDW - SIERRA MAPLE
4	140888-08-T11	EA	COUNTERTOP - LAMINATED - HYBRID SLATE/PORTSMOUTH OAK
4	140888-08-T12	EA	COUNTERTOP - LAMINATED - BRONZE LEGACY/PORTSMOUTH OAK
4	140888-08-T13	EA	COUNTERTOP - LAMINATED - NEXUS SAND/PORTSMOUTH OAK
4	140888-08-TK0	EA	COUNTERTOP - LAMINATED - HYBRID SLATE/SIERRA MAPLE
4	140888-08-TK1	EA	COUNTERTOP - LAMINATED - BRONZE LEGACY/SIERRA MAPLE
4	140888-08-TK2	EA	COUNTERTOP - LAMINATED - NEXUS SAND/SIERRA MAPLE
5	140888-09-T11	EA	COUNTERTOP - LAMINATED - HYBRID SLATE/PORTSMOUTH OAK
5	140888-09-T12	EA	COUNTERTOP - LAMINATED - BRONZE LEGACY/PORTSMOUTH OAK
5	140888-09-T13	EA	COUNTERTOP - LAMINATED - NEXUS SAND/PORTSMOUTH OAK
5	140888-09-TK0	EA	COUNTERTOP - LAMINATED - HYBRID SLATE/SIERRA MAPLE
5	140888-09-TK1	EA	COUNTERTOP - LAMINATED - BRONZE LEGACY/SIERRA MAPLE
5	140888-09-TK2	EA	COUNTERTOP - LAMINATED - NEXUS SAND/SIERRA MAPLE
6	136885-B3-S02	EA	CABINET - NIGHTSTAND/LH - W/O CTRTP/DOOR/DWR/HDW - PORTSMOUTH OAK
6	136885-B3-S88	EA	CABINET - NIGHTSTAND/LH - W/O CTRTP/DOOR/DWR/HDW - SIERRA MAPLE
7	136885-B4-S01	EA	CABINET - NIGHTSTAND/LH - W/O CTRTP/DOOR/DWR/HDW - PORTSMOUTH OAK
7	136885-B4-S88	EA	CABINET - NIGHTSTAND/LH - W/O CTRTP/DOOR/DWR/HDW - SIERRA MAPLE
8	136936-01-P13	EA	CABINET - OVERHEAD/REAR - W/O DOORS/HARDWARE - PORTSMOUTH OAK
8	136936-01-SW0	EA	CABINET - OVERHEAD/REAR - W/O DOORS/HARDWARE - SIERRA MAPLE
9	137406-07-S01	EA	BEDBOARD - W/HINGE/T-MOLDING/SLIPNOT - FLIP-UP
	096764-02-000	FT	SLIPNOT - ANTISLIP - 1'WIDE (180' ROLLS) - WHITE
10	150968-01-S01	EA	CABINET - BASE/QUEEN BED - W/O DOORS/DRAWERS/HARDWARE - PORTSMOUTH OAK
10	150968-01-S88	EA	CABINET - BASE/QUEEN BED - W/O DOORS/DRAWERS/HARDWARE - SIERRA MAPLE
11	024275-13-000	EA	ROD - TABLE LIFT - OFF/WHITE
12	024281-15-000	EA	BRACKET/WALL - TABLE LIFT - 17.12"
13	140921-02-01A	EA	BRACKET/TABLE SUPPORT - 18.5" - OFF WHITE
14	143798-01-01A	EA	CATCH - FLOOR TO TABLE LEG - BRIGHT WHITE

COPYRIGHT © 2006 WINNEBAGO INDUSTRIES INC.

CABINET & APPLIANCE GROUP (CONTINUED)

CABINET & APPLIANCE LAYOUT (CONTINUED)

KEY	PART NUMBER	U/M	DESCRIPTION
15	144605-08-T11	EA	TABLE - DINETTE - 41.6" X 37.6" - W/O HARDWARE
15	144605-08-T12	EA	TABLE - DINETTE - 41.6" X 37.6" - W/O HARDWARE
15	144605-08-T13	EA	TABLE - DINETTE - 41.6" X 37.6" - W/O HARDWARE
15	144605-08-TK0	EA	TABLE - DINETTE - 41.6" X 37.6" - W/O HARDWARE
15	144605-08-TK1	EA	TABLE - DINETTE - 41.6" X 37.6" - W/O HARDWARE
15	144605-08-TK2	EA	TABLE - DINETTE - 41.6" X 37.6" - W/O HARDWARE
16	064781-06-000	EA	HOLDER/CUP - TWO STEP - OFF WHITE
17	145004-12-S01	EA	CABINET/DINETTE-RH-W/END CAP/BACK/FACE-W/O DOOR/SEAT BOARD - PORTSMOUTH OAK
17	145004-12-S88	EA	CABINET/DINETTE-RH-W/END CAP/BACK/FACE-W/O DOOR/SEAT BOARD - SIERRA MAPLE
	091261-01-000	EA	SLIPNOT - ANTISLIP - 1' WIDE X 12' - BLACK
18	145004-13-S01	EA	CABINET/DINETTE-LH-W/END CAP/BACK/FACE-W/O DOOR/SEAT BOARD - PORTSMOUTH OAK
18	145004-13-S88	EA	CABINET/DINETTE-LH-W/END CAP/BACK/FACE-W/O DOOR/SEAT BOARD - SIERRA MAPLE
	091261-01-000	EA	SLIPNOT - ANTISLIP - 1' WIDE X 12' - BLACK
19	122021-01-02A	EA	ANGLE - W/HOLES - 8.6" LONG - OFF WHITE
20	081295-01-N70	EA	SUPPORT - BED/DINETTE - 28" LONG - PORTSMOUTH OAK
20	081295-01-RE0	EA	SUPPORT - BED/DINETTE - 28" LONG - SIERRA MAPLE
21	151051-01-T11	EA	CABINET - OVERHEAD/DINETTE - W/O DOORS/HARDWARE (T11)
21	151051-01-T12	EA	CABINET - OVERHEAD/DINETTE - W/O DOORS/HARDWARE (T12)
21	151051-01-S03	EA	CABINET - OVERHEAD/DINETTE - W/O DOORS/HARDWARE (T13)
21	151051-01-TK0	EA	CABINET - OVERHEAD/DINETTE - W/O DOORS/HARDWARE (TK0)
21	151051-01-TK1	EA	CABINET - OVERHEAD/DINETTE - W/O DOORS/HARDWARE (TK1)
21	151051-01-S90	EA	CABINET - OVERHEAD/DINETTE - W/O DOORS/HARDWARE (TK2)
22	136954-25-T11	EA	DOOR - RAISED PANEL/OGEE EDGE - 10" X 25.2" - W/O HDW - PORTSMOUTH OAK
22	136954-25-TL0	EA	DOOR - RAISED PANEL/OGEE EDGE - 10" X 25.2" - W/O HDW - SIERRA MAPLE
23	136954-22-T53	EA	DOOR - RAISED PANEL/OGEE EDGE - 10" X 19.1" - W/O HDW - PORTSMOUTH OAK
23	136954-22-TL0	EA	DOOR - RAISED PANEL/OGEE EDGE - 10" X 19.1" - W/O HDW - SIERRA MAPLE
24	136954-67-T11	EA	DOOR - RAISED PANEL/OGEE EDGE - 12" X 21.9" - W/O HDW - PORTSMOUTH OAK
24	136954-67-TK0	EA	DOOR - RAISED PANEL/OGEE EDGE - 12" X 21.9" - W/O HDW - SIERRA MAPLE
25	136954-28-T11	EA	DOOR - RAISED PANEL/OGEE EDGE - 10" X 29.5" - W/O HDW - PORTSMOUTH OAK
25	136954-28-TK0	EA	DOOR - RAISED PANEL/OGEE EDGE - 10" X 29.5" - W/O HDW - SIERRA MAPLE
26	147084-07-T11	EA	DOOR - FLAT PANEL/OGEE EDGE - 10" X 19.1" - W/O HDW - PORTSMOUTH OAK
26	147084-07-TK0	EA	DOOR - FLAT PANEL/OGEE EDGE - 10" X 19.1" - W/O HDW - SIERRA MAPLE
27	136954-49-T11	EA	DOOR - RAISED PANEL/OGEE EDGE - 10.8" X 36.4" - W/O HDW - PORTSMOUTH OAK
27	136954-49-TK0	EA	DOOR - RAISED PANEL/OGEE EDGE - 10.8" X 36.4" - W/O HDW - SIERRA MAPLE
28	136954-46-T11	EA	DOOR - RAISED PANEL/OGEE EDGE - 10.8" X 28" - W/O HDW - PORTSMOUTH OAK
28	136954-46-TK0	EA	DOOR - RAISED PANEL/OGEE EDGE - 10.8" X 28" - W/O HDW - SIERRA MAPLE

***COMPONENT PARTS LISTED LATER IN THIS GROUP**

COPYRIGHT © 2006 WINNEBAGO INDUSTRIES INC.

CABINET & APPLIANCE GROUP (CONTINUED)

CABINET & APPLIANCE LAYOUT (CONTINUED)

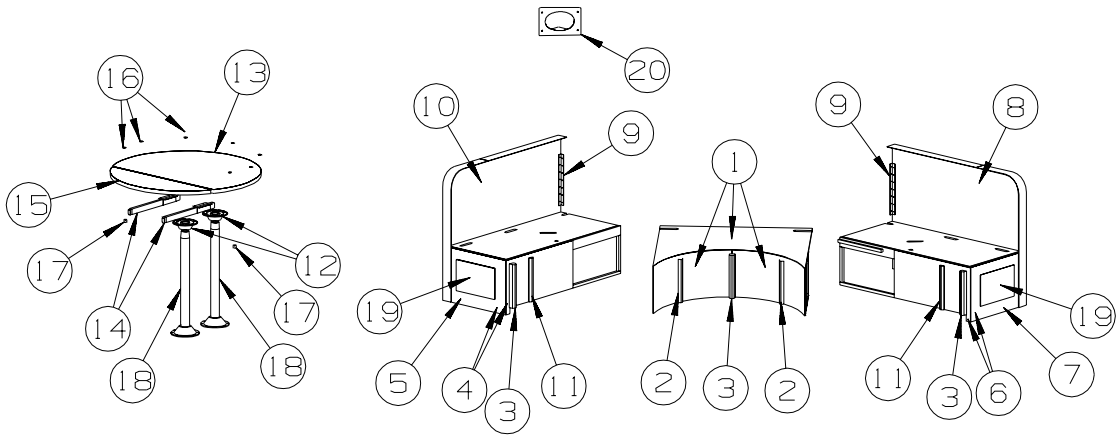

KEY	PART NUMBER	U/M	DESCRIPTION
1	P49636-AA-S01	EA	CABINET - SEATBASE/CTR “CURVED” ONLY-W/O HDW - PORTSMOUTH OAK
1	P49636-AA-S35	EA	CABINET - SEATBASE/CENTER “CURVED” ONLY - W/O HDW - SIERRA MAPLE
2	149636-44-S01	EA	LUMBER - STAINED - BEVELED - .75" X 1.5" X 11.4" - PORTSMOUTH OAK
2	149636-44-S35	EA	LUMBER - STAINED - BEVELED - .75" X 1.5" X 11.4" - SIERRA MAPLE
3	149636-37-S01	EA	LUMBER - STAINED - BEVELED - 1.5" X 1.5" X 11.4" - PORTSMOUTH OAK
3	149636-37-S35	EA	LUMBER - STAINED - BEVELED - 1.5" X 1.5" X 11.4" - SIERRA MAPLE
4	P49636-AB-S01	EA	CABINET - SEATBASE/LEFT HAND ONLY - W/O HARDWARE - PORTSMOUTH OAK
4	P49636-AB-S35	EA	CABINET - SEATBASE/LEFT HAND ONLY - W/O HARDWARE - SIERRA MAPLE
5	149636-25-S01	EA	END CAP - DINETTE - SEAT BASE/LEFT - PORTSMOUTH OAK
5	149636-25-S35	EA	END CAP - DINETTE - SEAT BASE/LEFT - SIERRA MAPLE
6	P49636-AC-S01	EA	CABINET - SEATBASE/RIGHT HAND ONLY - W/O HARDWARE - PORTSMOUTH OAK
6	P49636-AC-S35	EA	CABINET - SEATBASE/RIGHT HAND ONLY - W/O HARDWARE - SIERRA MAPLE
7	149636-14-S01	EA	END CAP - DINETTE - SEAT BASE/RIGHT - PORTSMOUTH OAK
7	149636-14-S35	EA	END CAP - DINETTE - SEAT BASE/RIGHT - SIERRA MAPLE
8	149636-11-T11	EA	SEAT BACK - DINETTE - RIGHT (T11)
8	149636-11-T12	EA	SEAT BACK - DINETTE - RIGHT (T12)
8	149636-11-S03	EA	SEAT BACK - DINETTE - RIGHT (T13)
8	149636-11-TK0	EA	SEAT BACK - DINETTE - RIGHT (TK0)
8	149636-11-TK1	EA	SEAT BACK - DINETTE - RIGHT (TK1)
8	149636-11-S90	EA	SEAT BACK - DINETTE - RIGHT (TK2)
9	122021-02-02A	EA	ANGLE - W/HOLES - 13.7" LONG - OFF WHITE
10	149636-22-T11	EA	SEAT BACK - DINETTE - LEFT (T11)
10	149636-22-T12	EA	SEAT BACK - DINETTE - LEFT (T12)
10	149636-22-S03	EA	SEAT BACK - DINETTE - LEFT (T13)
10	149636-22-TK0	EA	SEAT BACK - DINETTE - LEFT (TK0)
10	149636-22-TK1	EA	SEAT BACK - DINETTE - LEFT (TK1)
10	149636-22-S90	EA	SEAT BACK - DINETTE - LEFT (TK2)
11	149636-42-S01	EA	LUMBER - STAINED - BEVELED - .75" X 1.3" X 11.4" - PORTSMOUTH OAK
11	149636-42-S88	EA	LUMBER - STAINED - BEVELED - .75" X 1.3" X 11.4" - SIERRA MAPLE
12	009040-03-000	EA	BASE - TABLE MOUNT FROM: 00-00-00 THRU: 04-19-05
12	155001-02-01A	EA	BASE - LEG MOUNT/FLOOR/TABLE - RAISED - SILVER FROM: 04-20-05 THRU: 99-99-99

COPYRIGHT © 2006 WINNEBAGO INDUSTRIES INC.

CABINET & APPLIANCE GROUP (CONTINUED)

CABINET & APPLIANCE LAYOUT (CONTINUED)

KEY	PART NUMBER	U/M	DESCRIPTION
13	150183-01-T11	EA	TABLE/DINETTE - ROUND - W/O DROP LEAF/LEG/HDW (T11) FROM: 00-00-00 THRU: 05-11-05
13	150183-03-T11	EA	TABLE/DINETTE - ROUND - W/O DROP LEAF/LEG/HDW (T11) FROM: 05-12-05 THRU: 99-99-99
13	150183-01-T12	EA	TABLE/DINETTE - ROUND - W/O DROP LEAF/LEG/HDW (T12) FROM: 00-00-00 THRU: 05-11-05
13	150183-03-T12	EA	TABLE/DINETTE - ROUND - W/O DROP LEAF/LEG/HDW (T12) FROM: 05-12-05 THRU: 99-99-99
13	150183-01-T13	EA	TABLE/DINETTE - ROUND - W/O DROP LEAF/LEG/HDW (T13) FROM: 00-00-00 THRU: 05-11-05
13	150183-03-T13	EA	TABLE/DINETTE - ROUND - W/O DROP LEAF/LEG/HDW (T13) FROM: 05-12-05 THRU: 99-99-99
13	150183-01-S37	EA	TABLE/DINETTE - ROUND - W/O DROP LEAF/LEG/HDW (TK0) FROM: 00-00-00 THRU: 05-11-05
13	150183-03-T46	EA	TABLE/DINETTE - ROUND - W/O DROP LEAF/LEG/HDW (TK0) FROM: 05-12-05 THRU: 99-99-99
13	150183-01-S35	EA	TABLE/DINETTE - ROUND - W/O DROP LEAF/LEG/HDW (TK1) FROM: 00-00-00 THRU: 05-11-05
13	150183-03-T42	EA	TABLE/DINETTE - ROUND - W/O DROP LEAF/LEG/HDW (TK1) FROM: 05-12-05 THRU: 99-99-99
13	150183-01-TK2	EA	TABLE/DINETTE - ROUND - W/O DROP LEAF/LEG/HDW (TK2) FROM: 00-00-00 THRU: 05-11-05
13	150183-03-TK2	EA	TABLE/DINETTE - ROUND - W/O DROP LEAF/LEG/HDW (TK2) FROM: 05-12-05 THRU: 99-99-99
14	120973-01-000	EA	SUPPORT - TABLE/DROP LEAF - PAIR
15	150183-02-T11	EA	TABLE/DINETTE - DROP LEAF - W/O HDW (T11)
15	150183-02-T12	EA	TABLE/DINETTE - DROP LEAF - W/O HDW (T12)
15	150183-02-T13	EA	TABLE/DINETTE - DROP LEAF - W/O HDW (T13)
15	150183-02-S37	EA	TABLE/DINETTE - DROP LEAF - W/O HDW (TK0)
15	150183-02-S35	EA	TABLE/DINETTE - DROP LEAF - W/O HDW (TK1)
15	150183-02-TK2	EA	TABLE/DINETTE - DROP LEAF - W/O HDW (TK2)
16	120760-01-000	EA	RUBBER BUMPER - CLEAR - .1" THICK X .8" DIAMETER
17	117047-02-000	EA	BUMPER - RUBBER/WASHER INSERT
18	009040-02-000	EA	PEDESTAL TABLE LEG - 27.5" X 2.25" DIAMETER FROM: 00-00-00 THRU: 04-19-05
18	155001-01-01A	EA	LEG - PEDESTAL TABLE - 27" - SILVER FROM: 04-20-05 THRU: 99-99-99
	062046-01-000	EA	CLIP - LEG - PEDESTAL - 1.7" X 2.2" - DIA FROM 2" - 2.5"
19	147084-05-T11	EA	DOOR - FLAT PANEL/OGEE EDGE - 10" X 15.7" - W/O HDW - PORTSMOUTH OAK
19	147084-05-S35	EA	DOOR - FLAT PANEL/OGEE EDGE - 10" X 15.7" - W/O HDW - SIERRA MAPLE
20	151005-01-T11	EA	CABINET - SPEAKER - W/O HARDWARE (T11)
20	151005-01-T12	EA	CABINET - SPEAKER - W/O HARDWARE (T12)
20	151005-01-SR8	EA	CABINET - SPEAKER - W/O HARDWARE (T13)
20	151005-01-TK0	EA	CABINET - SPEAKER - W/O HARDWARE (TK0)
20	151005-01-TK1	EA	CABINET - SPEAKER - W/O HARDWARE (TK1)
20	151005-01-S90	EA	CABINET - SPEAKER - W/O HARDWARE (TK2)

***COMPONENT PARTS LISTED LATER IN THIS GROUP**

COPYRIGHT © 2006 WINNEBAGO INDUSTRIES INC.

CABINET & APPLIANCE GROUP (CONTINUED)

CABINET & APPLIANCE LAYOUT (CONTINUED)

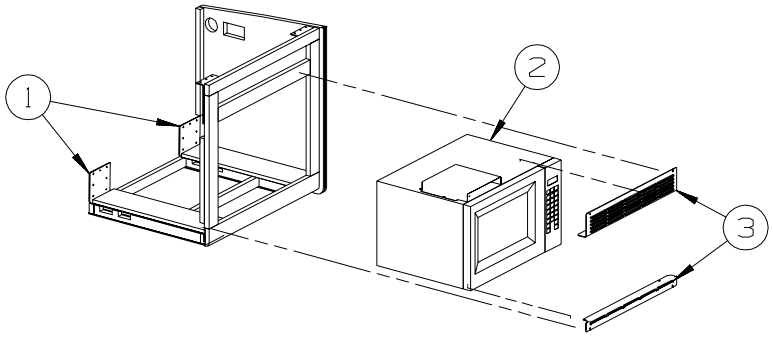

MICROWAVE OVEN

FROM: 00-00-00 THRU: 02-08-06

KEY	PART NUMBER	U/M	DESCRIPTION
1	143759-11-02B	EA	BRACKET - MICROWAVE - E-COATED
2	153390-01-01A	EA	OVEN/MICROWAVE - 1.1 CU FT-NON-CONV-W/O TRIM-BLACK-UL/CSA
3	153390-02-01A	EA	TRIM KIT W/VENT - MICROWAVE 1.1 CU FT - BLACK - WHIRLPOOL

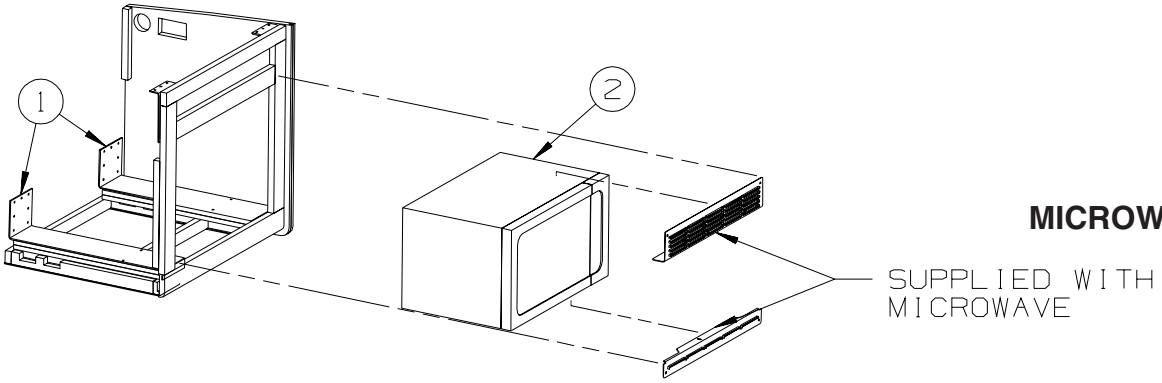

MICROWAVE OVEN

FROM: 02-09-06 THRU: 99-99-99

KEY	PART NUMBER	U/M	DESCRIPTION
1	143759-11-02B	EA	BRACKET - MICROWAVE - E-COATED
2	158686-01-01A	EA	OVEN/MICROWAVE - .9 CU FT - NON-CONV - BLACK

COPYRIGHT © 2006 WINNEBAGO INDUSTRIES INC.

CABINET & APPLIANCE GROUP (CONTINUED)

CABINET & APPLIANCE LAYOUT (CONTINUED)

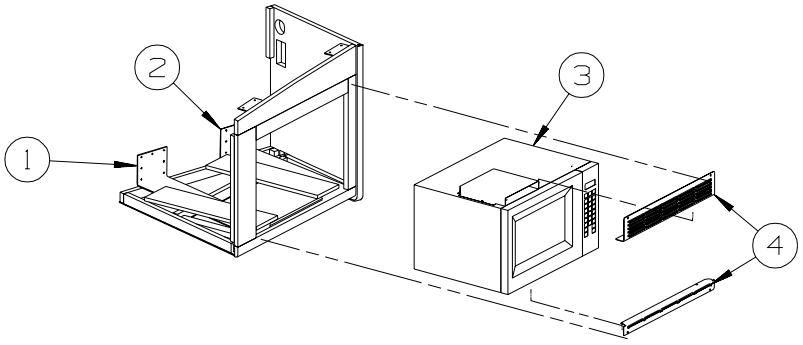

MICROWAVE OVEN

322E
FROM: 00-00-00 THRU: 02-08-06

KEY	PART NUMBER	U/M	DESCRIPTION
1	116843-03-02B	EA	BRACKET - MICROWAVE
2	128711-01-02B	EA	BRACKET - MICROWAVE
3	153390-01-01A	EA	OVEN/MICROWAVE - 1.1 CU FT-NON-CONV-W/O TRIM-BLACK-UL/CSA
4	153390-02-01A	EA	TRIM KIT W/VENT - MICROWAVE 1.1 CU FT - BLACK - WHIRLPOOL

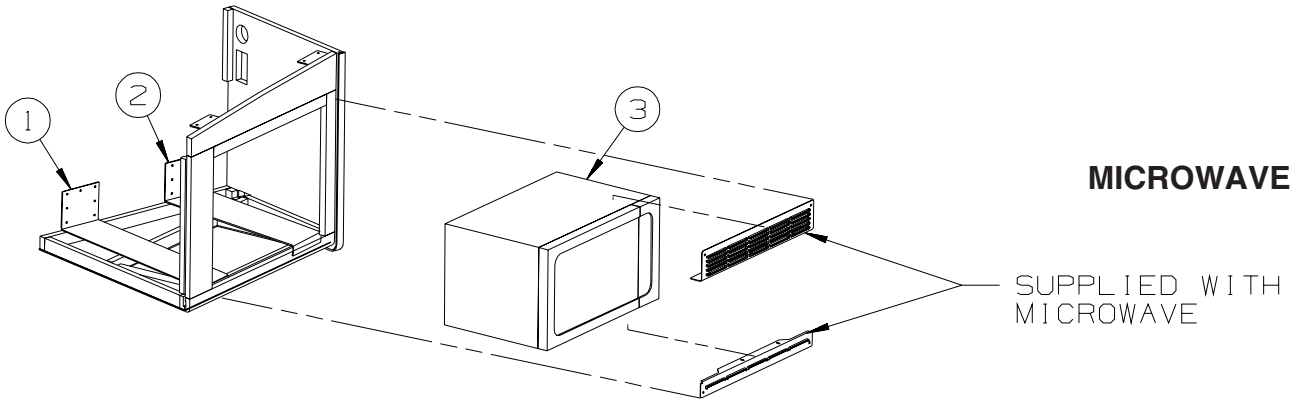

MICROWAVE OVEN

322E
FROM: 02-09-06 THRU: 99-99-99

KEY	PART NUMBER	U/M	DESCRIPTION
1	116843-03-02B	EA	BRACKET - MICROWAVE
2	128711-01-02B	EA	BRACKET - MICROWAVE
3	158686-01-01A	EA	OVEN/MICROWAVE - .9 CU FT - NON-CONV - BLACK

COPYRIGHT © 2006 WINNEBAGO INDUSTRIES INC.

CABINET & APPLIANCE GROUP (CONTINUED)

CABINET & APPLIANCE LAYOUT (CONTINUED)

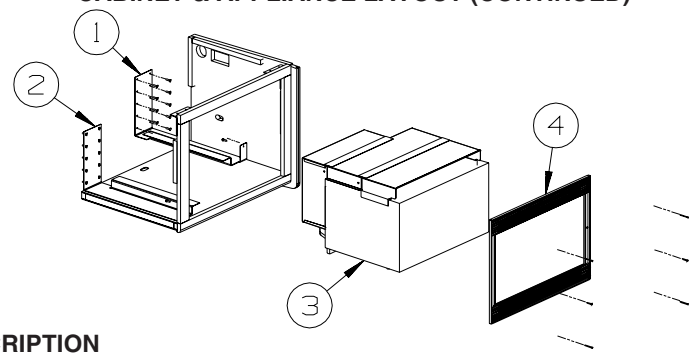

MICROWAVE/ CONVECTION OVEN

KEY	PART NUMBER	U/M	DESCRIPTION
1	149418-01-02B	EA	BRACKET - MICROWAVE - E-COATED - NOT ILLUSTRATED
			FROM: 00-00-00 THRU: 05-12-05
1	149418-09-02B	EA	BRACKET - MICROWAVE - E-COATED
			FROM: 05-13-05 THRU: 99-99-99
2	149418-02-02B	EA	BRACKET - MICROWAVE - E-COATED - NOT ILLUSTRATED
			FROM: 00-00-00 THRU: 05-12-05
2	149418-10-02B	EA	BRACKET - MICROWAVE - E-COATED
			FROM: 05-13-05 THRU: 99-99-99
3*	150606-04-01A	EA	OVEN - MICROWAVE/CONVECTION/BLACK - .9 CU FT - #R-820BK
4	150606-05-01A	EA	TRIM KIT - MICROWAVE .9 CU FT - BLACK - MAGNADYNE #R820

***COMPONENT PARTS LISTED LATER IN THIS GROUP**

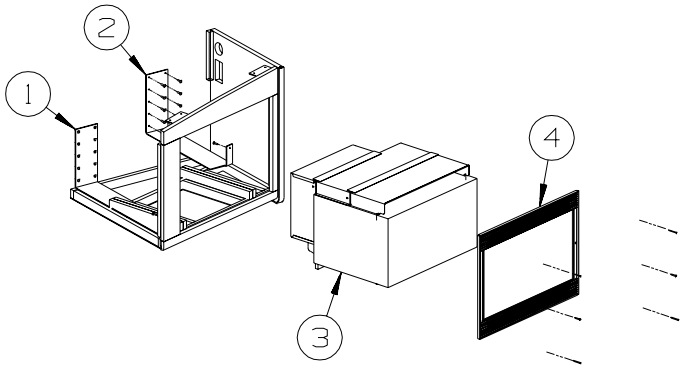

MICROWAVE/ CONVECTION OVEN

322E

KEY	PART NUMBER	U/M	DESCRIPTION
1	149418-06-02B	EA	BRACKET - MICROWAVE - E-COATED
2	149418-05-02B	EA	BRACKET - MICROWAVE - E-COATED
3*	150606-04-01A	EA	OVEN - MICROWAVE/CONVECTION/BLACK - .9 CU FT - #R-820B
4	150606-05-01A	EA	TRIM KIT - MICROWAVE .9 CU FT - BLACK - MAGNADYNE #R820

***COMPONENT PARTS LISTED LATER IN THIS GROUP**

COPYRIGHT © 2006 WINNEBAGO INDUSTRIES INC.

CABINET & APPLIANCE GROUP (CONTINUED)

CABINET & APPLIANCE LAYOUT (CONTINUED)

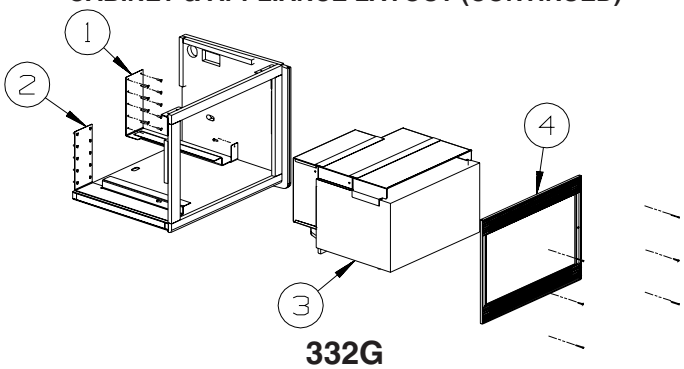

MICROWAVE/ CONVECTION OVEN

332G
FROM: 00-00-00 THRU: 05-08-05

KEY	PART NUMBER	U/M	DESCRIPTION
1	149418-01-02B	EA	BRACKET - MICROWAVE - E-COATED - NOT ILLUSTRATED FROM: 00-00-00 THRU: 05-12-05
1	149418-09-02B	EA	BRACKET - MICROWAVE - E-COATED FROM: 05-13-05 THRU: 99-99-99
2	149418-02-02B	EA	BRACKET - MICROWAVE - E-COATED - NOT ILLUSTRATED FROM: 00-00-00 THRU: 05-12-05
2	149418-10-02B	EA	BRACKET - MICROWAVE - E-COATED FROM: 05-13-05 THRU: 99-99-99
3*	150606-04-01A	EA	OVEN - MICROWAVE/CONVECTION/BLACK - .9 CU FT - #R-820BK
4	150606-05-01A	EA	TRIM KIT - MICROWAVE .9 CU FT - BLACK - MAGNADYNE #R820

***COMPONENT PARTS LISTED LATER IN THIS GROUP**

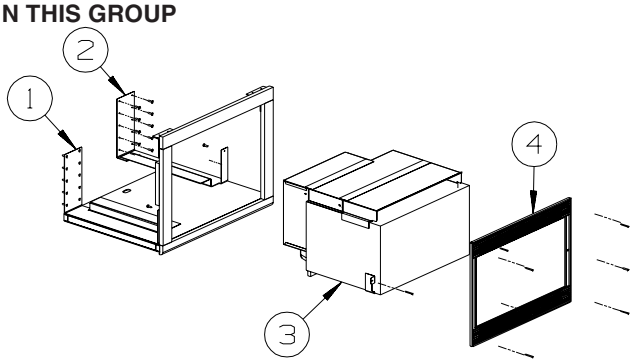

MICROWAVE/ CONVECTION OVEN

332G
FROM: 05-09-05 THRU: 99-99-99

KEY	PART NUMBER	U/M	DESCRIPTION
1	149418-08-02B	EA	BRACKET - MICROWAVE - E-COATED - NOT ILLUSTRATED FROM: 00-00-00 THRU: 06-12-05
1	149418-12-02B	EA	BRACKET - MICROWAVE - E-COATED FROM: 06-13-05 THRU: 99-99-99
2	149418-07-02B	EA	BRACKET - MICROWAVE - E-COATED - NOT ILLUSTRATED FROM: 00-00-00 THRU: 06-12-05
2	149418-11-02B	EA	BRACKET - MICROWAVE - E-COATED FROM: 06-13-05 THRU: 99-99-99
3*	150606-04-01A	EA	OVEN - MICROWAVE/CONVECTION/BLACK - .9 CU FT - #R-820BK
4	150606-05-01A	EA	TRIM KIT - MICROWAVE .9 CU FT - BLACK - MAGNADYNE #R820

***COMPONENT PARTS LISTED LATER IN THIS GROUP**

COPYRIGHT © 2006 WINNEBAGO INDUSTRIES INC.

CABINET & APPLIANCE GROUP (CONTINUED)

CABINET & APPLIANCE LAYOUT (CONTINUED)

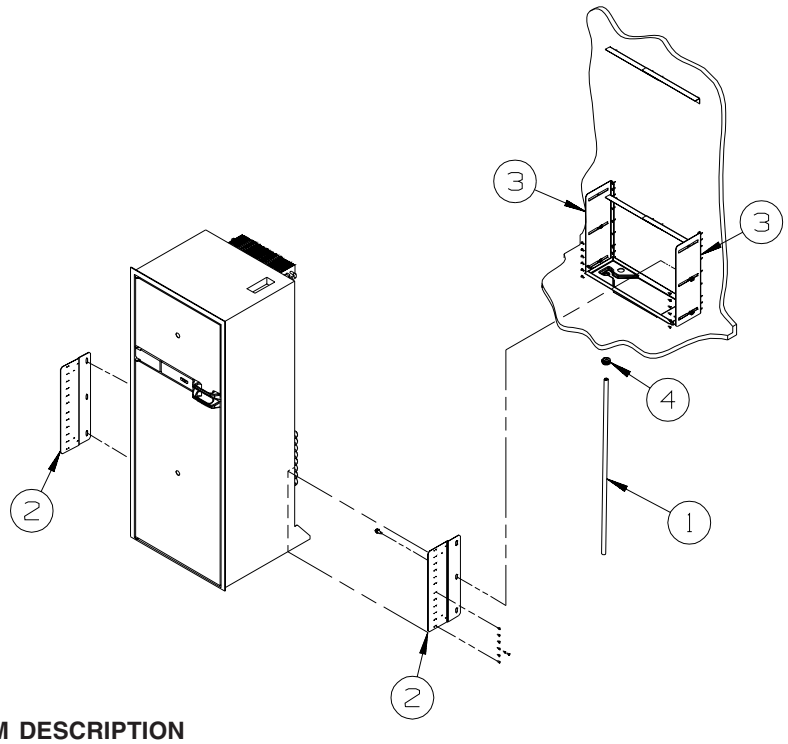

KEY	PART NUMBER	U/M	DESCRIPTION
1	112176-01-000	FT	TUBING - VINYL - REINFORCED - 1/2" ID
2	150740-01-02B	EA	BRACKET/TIEDOWN - REFRIGERATOR - E-COATED
3	150740-02-02B	EA	BRACKET/TIEDOWN - REFRIGERATOR - E-COATED
4	152417-01-01A	EA	CLAMP/RATCHET - F/REFRIGERATOR DRIP TRAY HOSE - BLACK

COPYRIGHT © 2006 WINNEBAGO INDUSTRIES INC.

CABINET & APPLIANCE GROUP (CONTINUED)

COMPONENT PARTS FOR CABINET & APPLIANCE LAYOUT

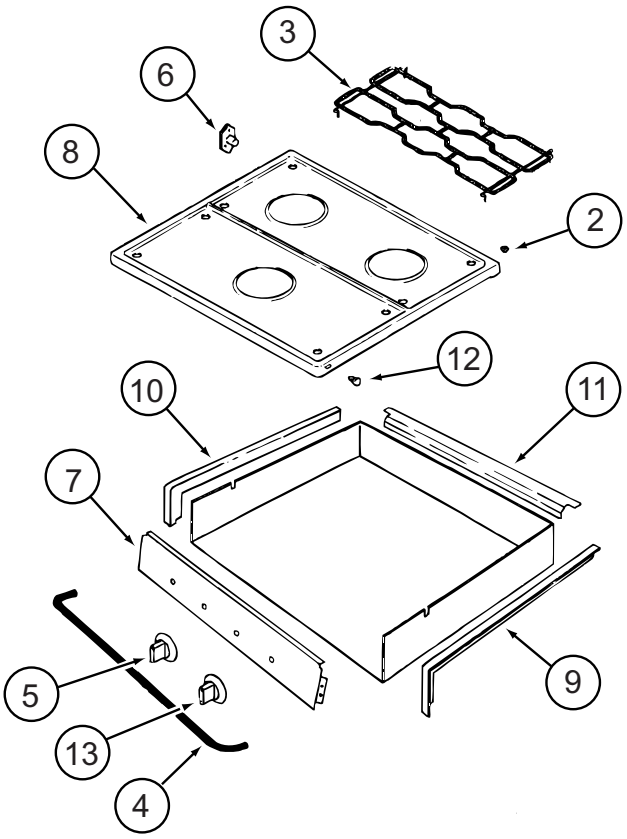

114030-04-01A

KEY	PART NUMBER	U/M	DESCRIPTION	VENDOR NO.
2	102020-01-709	EA	BUMPER-GRATE	8007P020-60
3	112881-04-702	EA	GRATE - BLACK	74007277
4	114030-02-700	EA	GUARD/FABRIC - TOWEL BAR	3609F006-70
5	128728-01-701	EA	KNOB - BURNER - REAR	74003941 (1 PER)
5	128728-01-702	EA	KNOB - BURNER - FRONT	74003942 (2 PER)
6	128728-01-703	EA	PIN/T-NUT F/HINGE	7103P109-60
7	114030-04-700	EA	PANEL - MANIFOLD - BLACK	74007325
8	126023-01-728	EA	TOP - MAIN (BLACK)	74003323
9	114030-01-704	EA	TRIM - RIGHT/BLACK TEXTURED	74002839
10	114030-01-705	EA	TRIM - LEFT/BLACK TEXTURED	74002840
11	114030-01-706	EA	TRIM - REAR/BLACK TEXTURED	74002841
12	102020-01-724	EA	BUMPER - MAIN TOP	8003P008-60
13	128728-01-707	EA	KNOB - IGNITER	74003944

CONTACT WINNEBAGO PART SALES FOR UNLISTED COMPONENT(S)

COPYRIGHT © 2006 WINNEBAGO INDUSTRIES INC.

CABINET & APPLIANCE GROUP (CONTINUED)

COMPONENT PARTS FOR CABINET & APPLIANCE LAYOUT (CONTINUED)

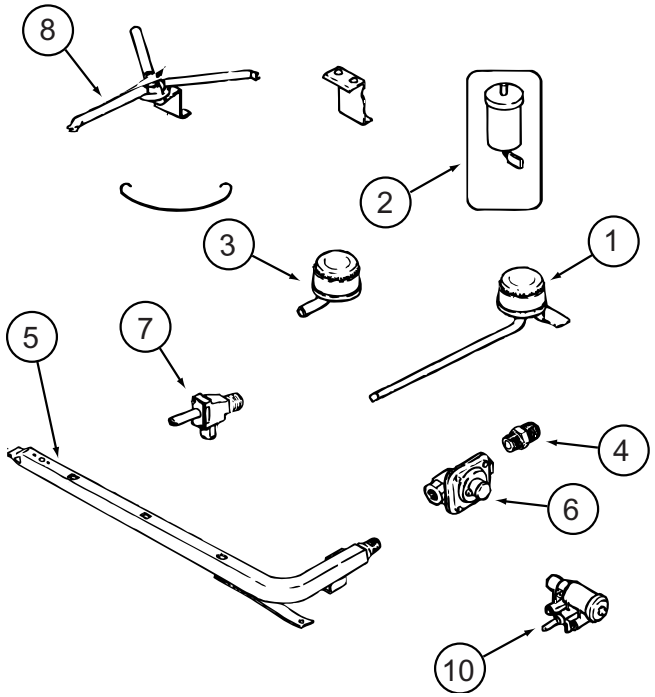

114030-04-01A (CONTINUED)

KEY	PART NUMBER	U/M	DESCRIPTION	VENDOR NO.
1	112881-04-700	EA	BURNER - TOP /LEFT - REAR	74004584
1	126023-01-700	EA	BURNER - TOP (RT-REAR) 5100 BTU	74004583
2	112881-04-705	EA	PUSH RING (ELECTRODE MTG)	7104P002-60
2	126023-01-711	EA	ELECTRODE - IGNITER (ONLY)	7432P077-60
3	112881-04-701	EA	BURNER - TOP/FRONT	74004582
4	135065-03-700	EA	FITTING - HALF UNION	74004234
5	135065-01-702	EA	PIPE/MANIFOLD	74004642
6	126023-02-702	EA	PIPE - MANIFOLD	74004360
7	126023-02-705	EA	VALVE - BURNER - REAR	74004362
7	126023-02-706	EA	VALVE - BURNER - FRONT	74004363
8	126023-01-736	EA	FLASH TUBE EXTENSION (REAR)	74003326
8	126023-01-737	EA	FLASH TUBE EXTENSION (FRONT)	74003327
10	126023-01-719	EA	IGNITER HEAD - TOP BURNER	74002413

CONTACT WINNEBAGO PART SALES FOR UNLISTED COMPONENT(S)

COPYRIGHT © 2006 WINNEBAGO INDUSTRIES INC.

CABINET & APPLIANCE GROUP (CONTINUED)

COMPONENT PARTS FOR CABINET & APPLIANCE LAYOUT (CONTINUED)

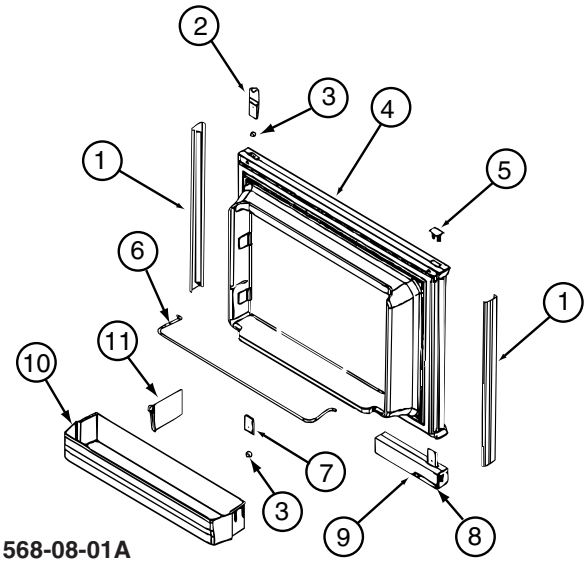

121568-06-01A, 121568-07-01A, 121568-08-01A

KEY	PART NUMBER	U/M	DESCRIPTION	VENDOR NO.
1	121568-03-700	EA	RETAINER-DOOR PNL/WAFFLE/BLK	619558-WDL-UPPER
2	120075-01-701	EA	HINGE-TOP RH/BOTTOM LH(DOOR)	618511
3	121568-03-701	EA	BUSHING - HINGE PIN/GRAY	619671
4	121568-03-702	EA	DOOR LINER-UPR/WAFFLED/BLACK	619627 - SMALL WDL
5	120075-01-702	EA	CAP, (HINGE PLUG)	618160
6	121568-01-700	EA	RAIL - DOOR UPPER	618618
7	120075-01-705	EA	HINGE-TOP LH/BOTTOM RH(DOOR)	618510
8	121568-03-705	EA	STORAGE LATCH - GRAY	619648
9	121568-03-721	EA	HANDLE/DOOR TOP LH/LWR RH	621465
9	121568-03-722	EA	HANDLE/DOOR LWR RH/TOP LH	621469
10	121568-01-701	EA	BIN - DOOR WHITE-WAFFLED LNR	618619 WDL
			CONTACT WINNEBAGO PART SALES FOR UNLISTED COMPONENT(S)	

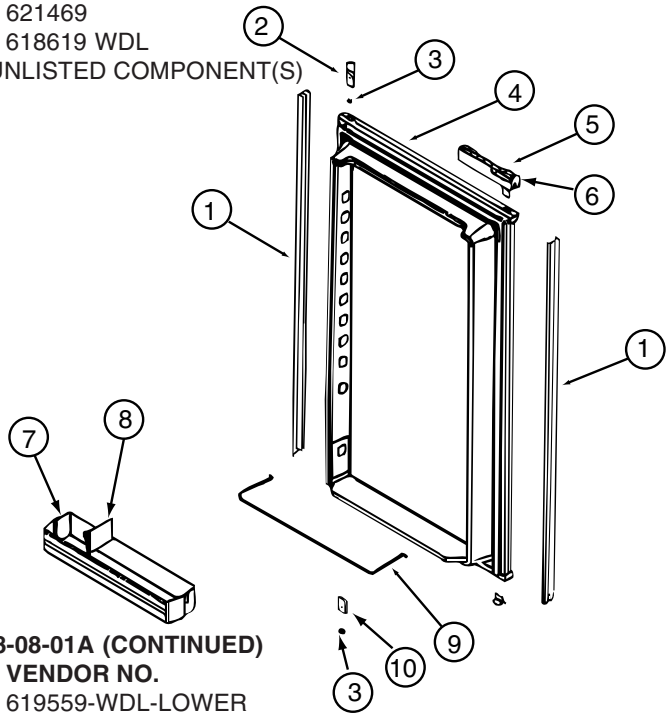

121568-06-01A, 121568-07-01A, 121568-08-01A (CONTINUED)

KEY	PART NUMBER	U/M	DESCRIPTION	VENDOR NO.
1	121568-03-706	EA	RETAINER-DOOR PNL/WAFFLE/BLK	619559-WDL-LOWER
2	120075-01-701	EA	HINGE-TOP RH/BOTTOM LH(DOOR)	618511
3	121568-03-701	EA	BUSHING - HINGE PIN/GRAY	619671
4	121568-03-707	EA	DOOR LINER-LWR/WAFFLED/B/TRM	619629
5	121568-03-721	EA	HANDLE/DOOR TOP LH/LWR RH	621465
5	121568-03-722	EA	HANDLE/DOOR LWR RH/TOP LH	621469
6	121568-03-705	EA	STORAGE LATCH - GRAY	619648
7	121568-01-701	EA	BIN - DOOR WHITE-WAFFLED LNR	618619 WDL
9	121568-01-704	EA	RAIL - DOOR LOWER	618578
10	120075-01-705	EA	HINGE-TOP LH/BOTTOM RH(DOOR)	618510
			CONTACT WINNEBAGO PART SALES FOR UNLISTED COMPONENT(S)	

COPYRIGHT © 2006 WINNEBAGO INDUSTRIES INC.

CABINET & APPLIANCE GROUP (CONTINUED)

COMPONENT PARTS FOR CABINET & APPLIANCE LAYOUT (CONTINUED)

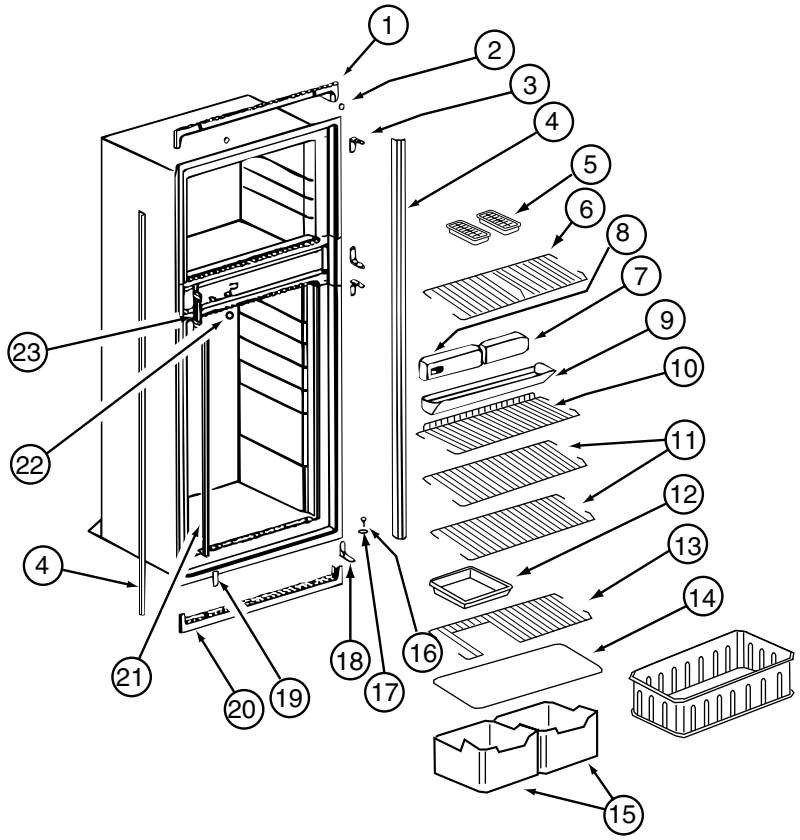

121568-06-01A, 121568-07-01A, 121568-08-01A (CONTINUED)

KEY	PART NUMBER	U/M	DESCRIPTION	VENDOR NO.
1	120075-01-713	EA	TRIM-TOP PIECE	619687
2	120075-01-714	EA	PLUG-HOLE (BLACK)	618170
3	121568-03-710	EA	HINGE/CABINET-TOP/RH-LWR/LH	619335 WAFFLED
4	121568-03-711	EA	TRIM - SIDE/BLACK	622295
6	121568-01-705	EA	SHELF - WIRE FREEZER	620250
7	121568-06-700	EA	FRONT BOX-N611	622002
8	121568-06-701	EA	CONTROL ASSY-OPTICAL/N611	621988
9	120075-01-720	EA	TRAY-DRIP	623250
9	120075-01-721	EA	LOUVER-DRIP TRAY	618176
11	121568-01-708	EA	SHELF - WIRE	620273
13	121568-01-707	EA	SHELF - WIRE - SHORT	620272
14	120075-01-725	EA	COVER-CRISPER	618158
15	121568-01-709	EA	CRISPER	618571
16	120075-01-727	EA	PIN-HINGE	618145
17	121568-03-701	EA	BUSHING - HINGE PIN/GRAY	619671
18	121568-03-715	EA	HINGE/CABINET-TOP/LH-LWR/RH	619336 WAFFLED
19	121568-03-716	EA	COVER - HINGE HOLES	619301
20	120075-01-729	EA	TRIM-BOTTOM PIECE	620958
21	121568-06-702	EA	CLIP - SHELF	61536522
22	121568-06-703	EA	HOLE PLUG - WHITE	620282
23	120075-01-732	EA	PLATE-STRIKE	618167

CONTACT WINNEBAGO PART SALES FOR UNLISTED COMPONENT(S)

COPYRIGHT © 2006 WINNEBAGO INDUSTRIES INC.

CABINET & APPLIANCE GROUP (CONTINUED)

COMPONENT PARTS FOR CABINET & APPLIANCE LAYOUT (CONTINUED)

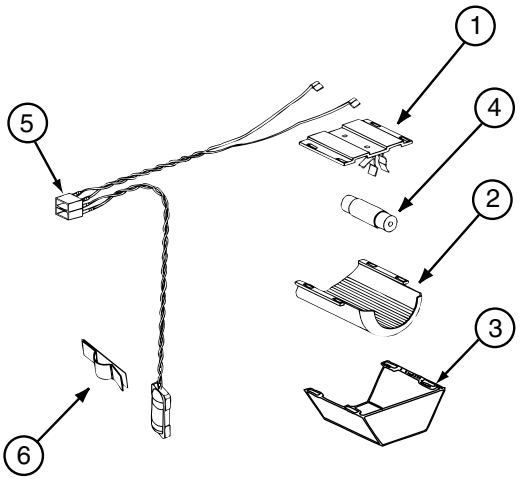

121568-03-01A, 121568-04-01A, 121568-05-01A, 121568-06-01A, 121568-07-01A, 121568-08-01A (CONTINUED)

KEY	PART NUMBER	U/M	DESCRIPTION	VENDOR NO.
1	084880-01-760	EA	CLIP (THERMISTER)	61689122
2	120075-01-735	EA	THERMISTER W/LAMP & WIRE/ASM	618548
3	084880-03-705	EA	BRACKET-LIGHT-INTERIOR	61629722
4	084880-03-706	EA	BULB-LAMP	61628922
6	084880-03-707	EA	COVER-LAMP, LENS	61627922
			CONTACT WINNEBAGO PART SALES FOR UNLISTED COMPONENT(S)	

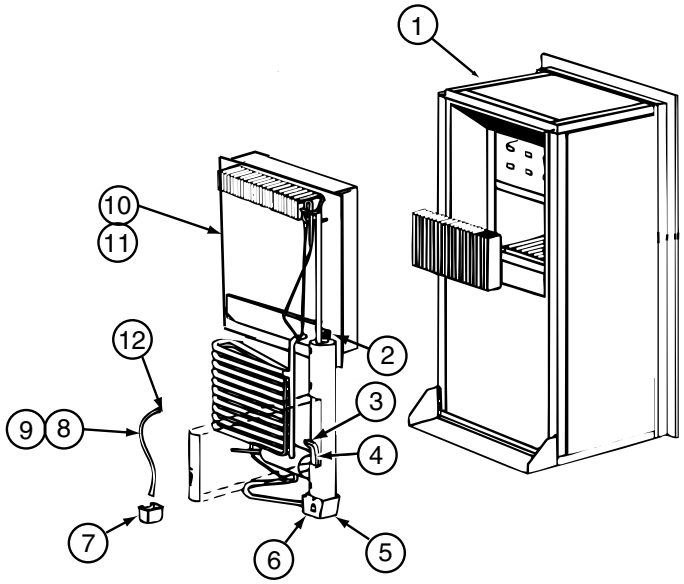

121568-06-01A, 121568-07-01A, 121568-08-01A (CONTINUED)

KEY	PART NUMBER	U/M	DESCRIPTION	VENDOR NO.
4	121568-06-704	EA	HEATER-AC/300W/120VAC	621702
10	120076-01-704	EA	COOLING UNIT, SERVICE PACK	618543
			CONTACT WINNEBAGO PART SALES FOR UNLISTED COMPONENT(S)	

COPYRIGHT © 2006 WINNEBAGO INDUSTRIES INC.

CABINET & APPLIANCE GROUP (CONTINUED)

COMPONENT PARTS FOR CABINET & APPLIANCE LAYOUT (CONTINUED)

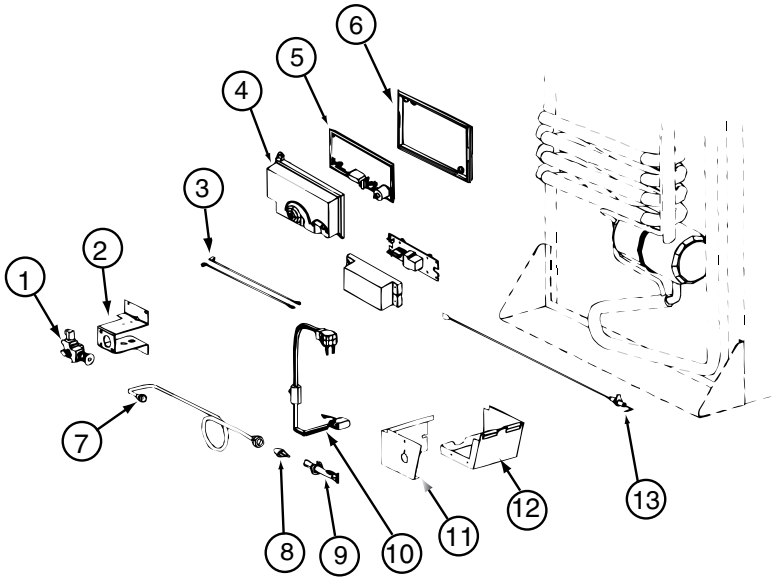

121568-06-01A, 121568-07-01A, 121568-08-01A (CONTINUED)

KEY	PART NUMBER	U/M	DESCRIPTION	VENDOR NO.
1	121568-06-705	EA	GAS VALVE/BRKT ASSY-COMBO	621439
1	121568-06-706	EA	GAS VALVE-COMBO/WRENCH FLAT	621329
4	120075-01-738	EA	COVER-POWER BOARD	618185
5	121568-06-707	EA	BOARD/POWER-N611	621991 = 621991001
6	120075-01-740	EA	COVER-BASE, POWER BOARD	618186
8	121568-06-708	EA	BURNER/ORFICE-ADAPTER KIT	621957
13	104137-06-715	EA	ELECTRODE-SPARK/SENSOR, SGL	61692222
			CONTACT WINNEBAGO PART SALES FOR UNLISTED COMPONENT(S)	

121568-05-01A, 121568-07-01A, 121568-08-01A (CONTINUED)

KEY	PART NUMBER	U/M	DESCRIPTION	VENDOR NO.
	121568-05-700	EA	FAN 12V KIT DBLE SIDEWALL	619020

COPYRIGHT © 2006 WINNEBAGO INDUSTRIES INC.

CABINET & APPLIANCE GROUP (CONTINUED)

COMPONENT PARTS FOR CABINET & APPLIANCE LAYOUT (CONTINUED)

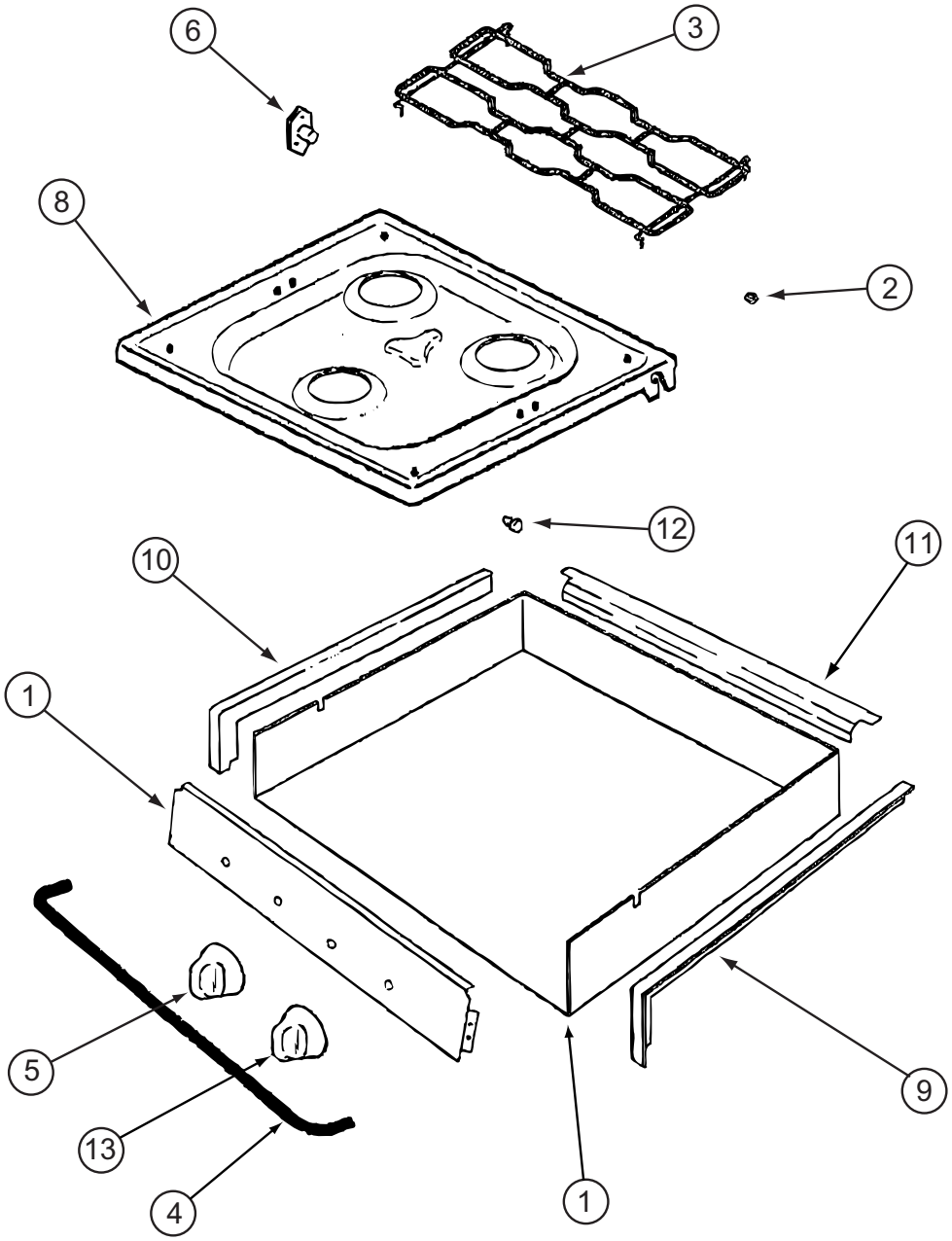

135065-03-01A, 135065-03-03A, 135065-04-01A

KEY	PART NUMBER	U/M	DESCRIPTION	VENDOR NO.
2	102020-01-709	EA	BUMPER-GRATE	8007-P020-60
3	135065-03-703	EA	GRATE - BLACK(SEALED BURNER)	74007304
4	114030-02-700	EA	GUARD/FABRIC - TOWEL BAR	3609F006-70
5	128728-01-701	EA	KNOB - BURNER - REAR	74003941
5	128728-01-702	EA	KNOB - BURNER - FRONT	74003942
6	128728-01-703	EA	PIN/T-NUT F/HINGE	7103P109-60
7	135065-03-704	EA	PANEL - MANIFOLD (BLACK)	74007330
8	128728-01-705	EA	TOP - MAIN - BLACK	74003928
8	135065-03-715	EA	TOP - MAIN - STAINLESS STEEL	74007299
9	114030-01-704	EA	TRIM - RIGHT/BLACK TEXTURED	74002839
10	114030-01-705	EA	TRIM - LEFT/BLACK TEXTURED	74002840
11	114030-01-706	EA	TRIM - REAR/BLACK TEXTURED	74002841
12	102020-01-724	EA	BUMPER-MAIN TOP	8003P008-60
13	128728-01-707	EA	KNOB - IGNITOR	74003944

CONTACT WINNEBAGO PART SALES FOR UNLISTED COMPONENT(S)

COPYRIGHT © 2006 WINNEBAGO INDUSTRIES INC.

CABINET & APPLIANCE GROUP (CONTINUED)

COMPONENT PARTS FOR CABINET & APPLIANCE LAYOUT (CONTINUED)

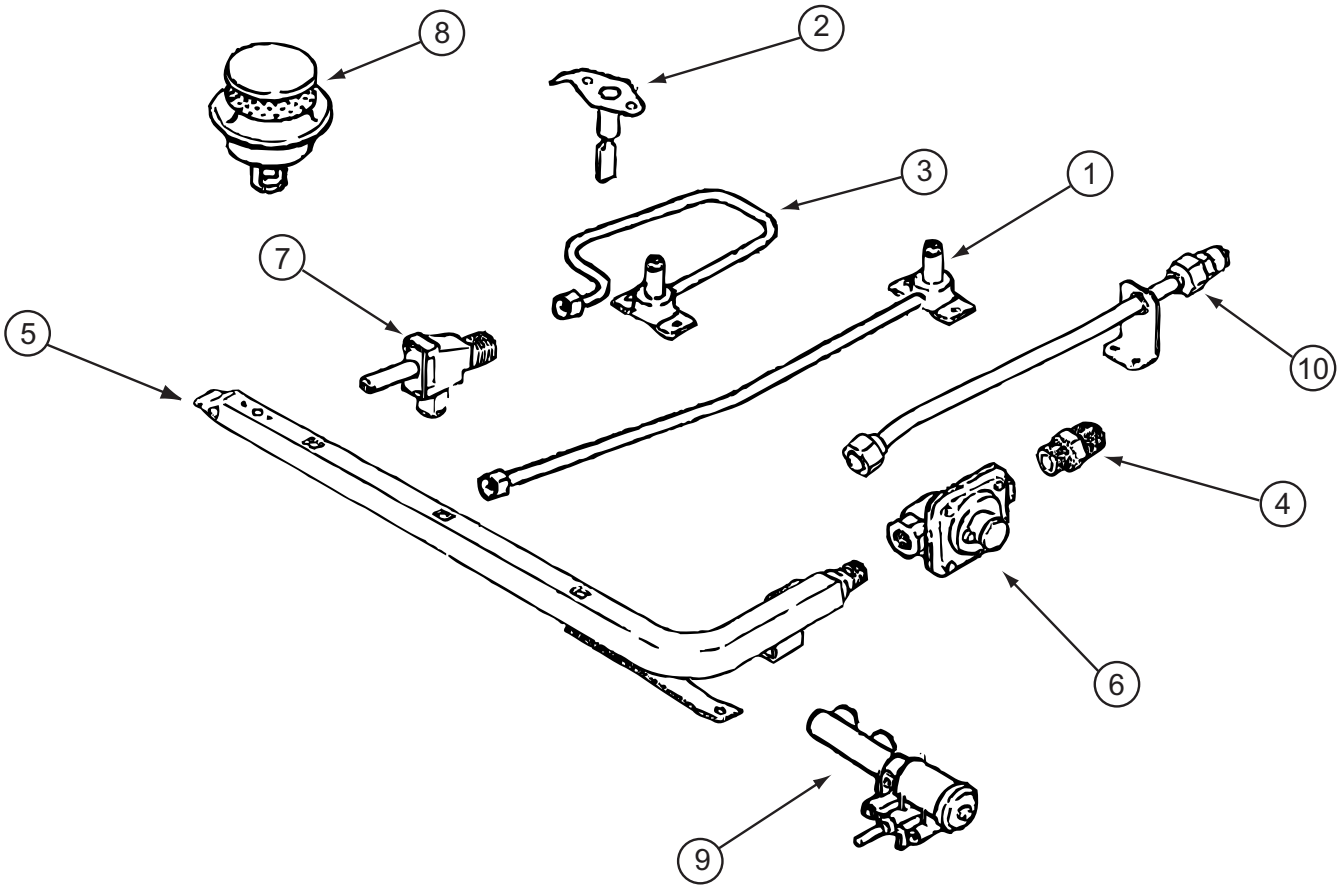

135065-03-01A, 135065-03-03A, 135065-04-01A (CONTINUED)

KEY	PART NUMBER	U/M	DESCRIPTION	VENDOR NO.
1	128728-01-708	EA	FITTING W/ORFICE/TUBE - REAR	74003931
2	135065-01-701	EA	IGNITOR/PORCELAIN-TOP BURNER	74004053
3	128728-01-710	EA	FITTING W/ORFICE/TUBE - FRT	74003930
4	135065-03-700	EA	FITTING - HALF UNION	74004234
5	135065-01-702	EA	PIPE/MANIFOLD	74004642
6	126023-02-703	EA	REGULATOR - PRESSURE	74004235
7	135065-01-703	EA	VALVE/BURNER - REAR	74004643
7	135065-01-704	EA	VALVE/BURNER-FRT-HI	74004644
7	135065-03-701	EA	SCREW - VALVE	71003231
8	135065-03-702	EA	SEALED BURNER ASM.(BLACK) RV	74003967
9	128728-01-716	EA	BURNER - IGNITOR	74003946
9	128728-01-717	EA	WIRES - IGNITOR	74003947

COPYRIGHT © 2006 WINNEBAGO INDUSTRIES INC.

CABINET & APPLIANCE GROUP (CONTINUED)

COMPONENT PARTS FOR CABINET & APPLIANCE LAYOUT (CONTINUED)

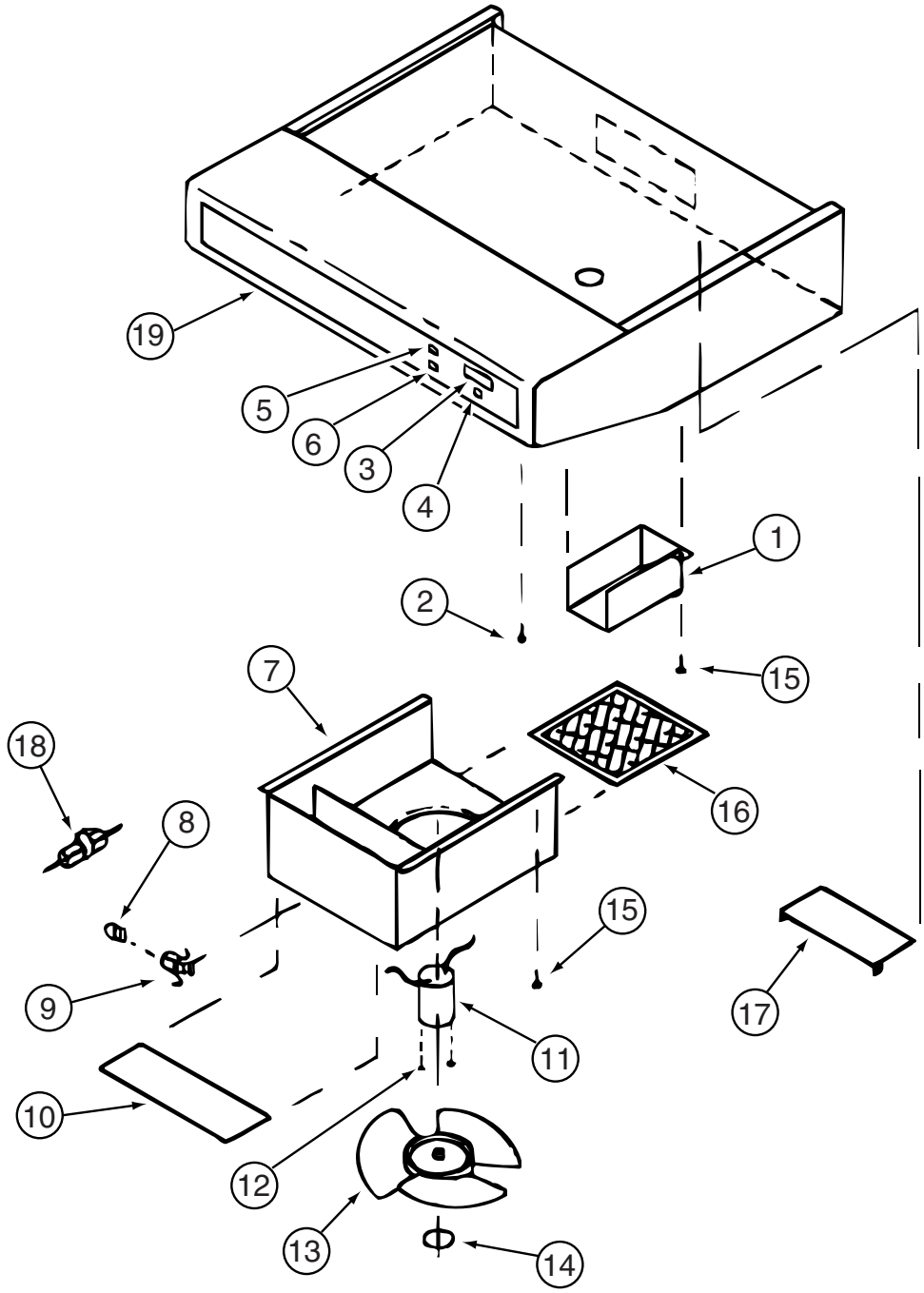

136354-02-02A

KEY	PART NUMBER	U/M	DESCRIPTION	VENDOR NO.
5	096983-01-700	EA	SWITCH/1 SPEED -ON/OFF- BLK	L0108-00
9	092696-01-710	EA	HOLDER-LAMP	CB267-02
10	096983-01-708	EA	LENS-LAMP	CC0179
11	136354-06-700	EA	MOTOR - FAN (CSA)	VC0535-02
13	136354-05-701	EA	BLADE-FAN 7” DIA	VD0216-00
16	096983-01-707	EA	FILTER-MESH	CC0246-00
17	100258-01-701	EA	DAMPER ASSEMBLY (METAL FLAP)	CA0565-00
19	100258-01-700	EA	LABEL-HOOD NOSE	CC0428-00

CONTACT WINNEBAGO PART SALES FOR UNLISTED COMPONENT(S)

COPYRIGHT © 2006 WINNEBAGO INDUSTRIES INC.

CABINET & APPLIANCE GROUP (CONTINUED)

COMPONENT PARTS FOR CABINET & APPLIANCE LAYOUT (CONTINUED)

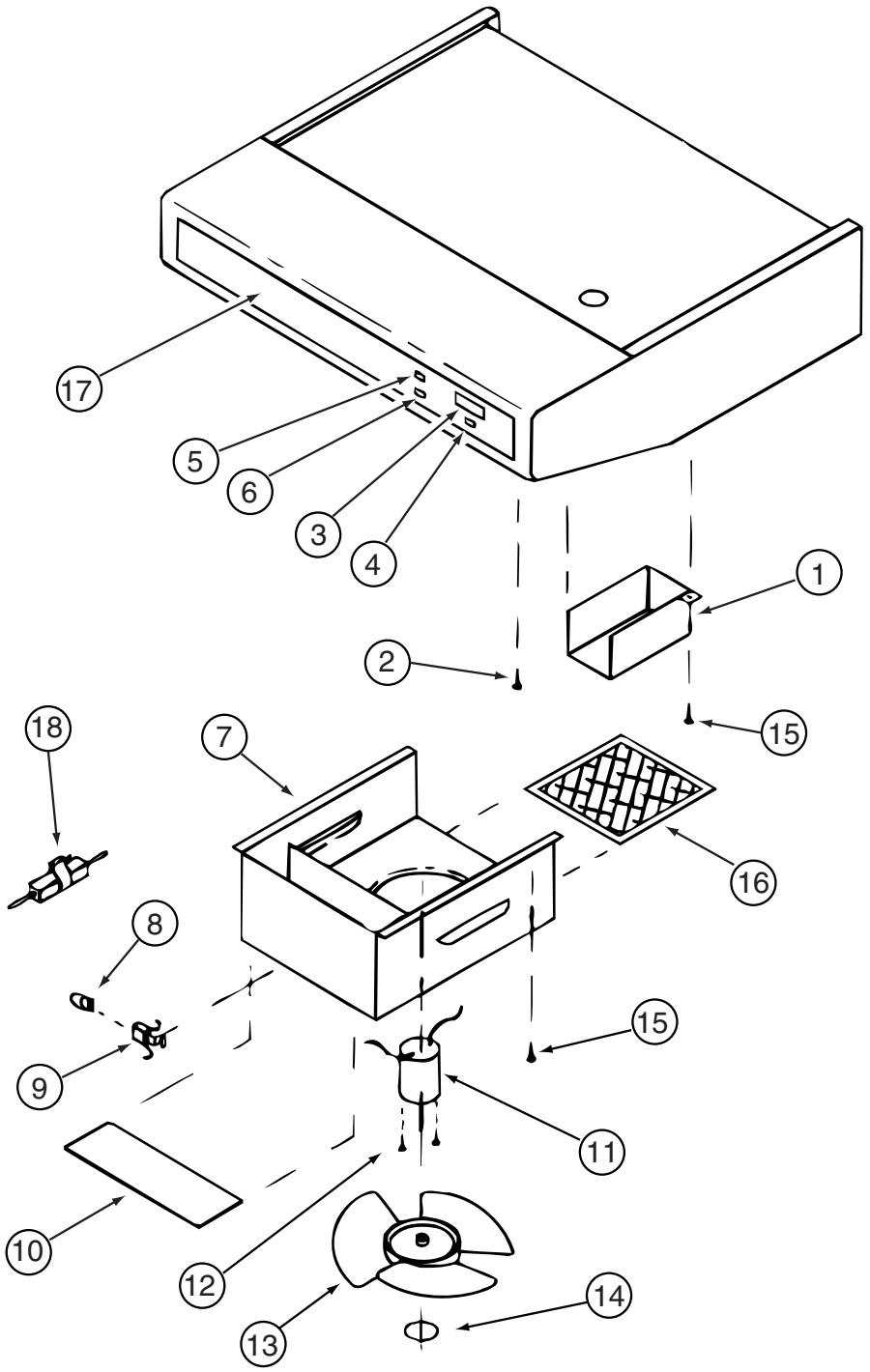

136354-03-02A

KEY	PART NUMBER	U/M	DESCRIPTION	VENDOR NO.
5	096983-01-700	EA	SWITCH/1 SPEED -ON/OFF- BLK	L0108-00
8	092696-01-709	EA	LAMP #912	VA415
9	092696-01-710	EA	HOLDER-LAMP	CB0267-02
10	096983-01-708	EA	LENS-LAMP	CC0179
11	136354-05-700	EA	MOTOR-12 VOLT	VC0536-02
13	136354-05-701	EA	BLADE-FAN 7" DIA	VD0216-00
16	096983-01-707	EA	FILTER-MESH	CC0246-00
17	100258-01-700	EA	LABEL-HOOD NOSE	CC0428-00
	103386-02-702	EA	SPRING-FILTER	CC245

CONTACT WINNEBAGO PART SALES FOR UNLISTED COMPONENT(S)

COPYRIGHT © 2006 WINNEBAGO INDUSTRIES INC.

CABINET & APPLIANCE GROUP (CONTINUED)

COMPONENT PARTS FOR CABINET & APPLIANCE LAYOUT (CONTINUED)

136354-04-02A

KEY	PART NUMBER	U/M	DESCRIPTION	VENDOR NO.
5	096983-01-700	EA	SWITCH/1 SPEED -ON/OFF- BLK	L0108-00
8	092696-01-709	EA	LAMP #912	VA415
9	092696-01-710	EA	HOLDER-LAMP	CB0267-02
10	096983-01-708	EA	LENS-LAMP	CC0179
11	136354-06-700	EA	MOTOR - FAN (CSA)	VC0535-02
13	136354-05-701	EA	BLADE-FAN 7" DIA	VD0216-00
16	096983-01-707	EA	FILTER-MESH	CC0246-00
17	100258-01-700	EA	LABEL-HOOD NOSE	CC0428-00
	103386-02-702	EA	SPRING-FILTER	CC245
			CONTACT WINNEBAGO PART SALES FOR UNLISTED COMPONENT(S)	

COPYRIGHT © 2006 WINNEBAGO INDUSTRIES INC.

CABINET & APPLIANCE GROUP (CONTINUED)

COMPONENT PARTS FOR CABINET & APPLIANCE LAYOUT (CONTINUED)

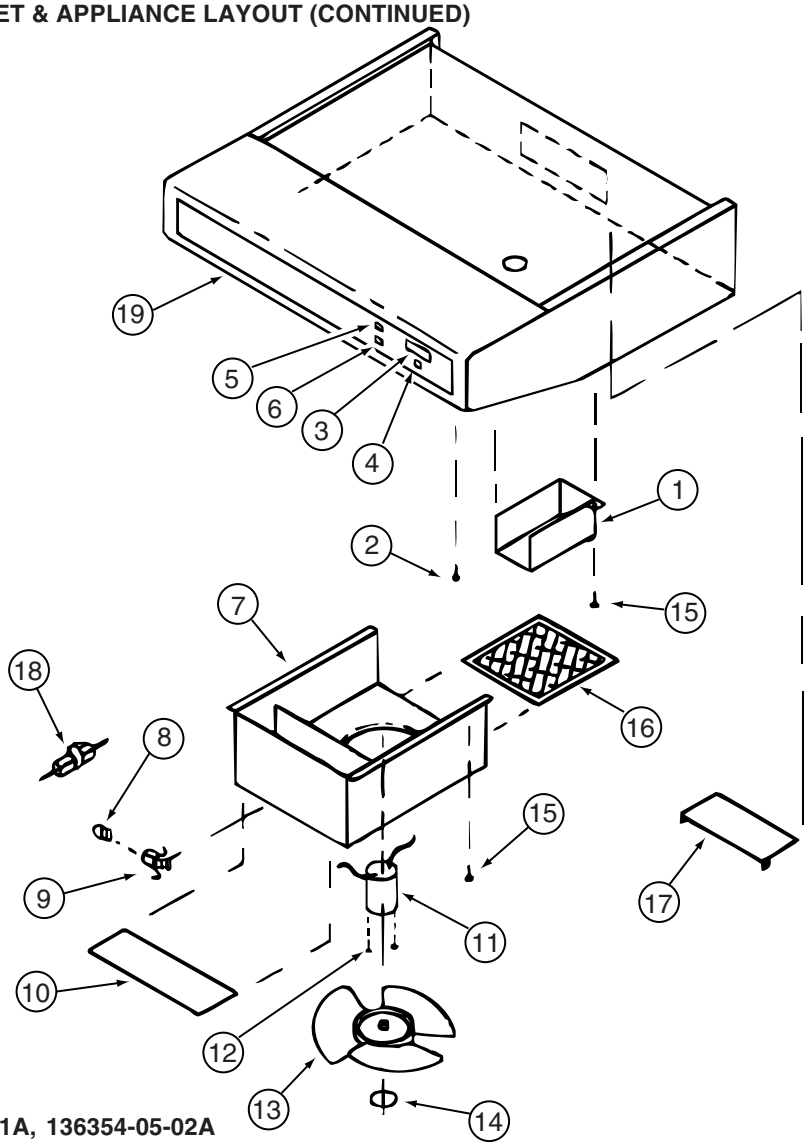

136354-05-01A, 136354-05-02A

KEY	PART NUMBER	U/M	DESCRIPTION	VENDOR NO.
3	100258-10-700	EA	GAUGE-HOUR METER, SCREW ON	L0150-00 WAS 150
4	096983-01-702	EA	SWITCH - MOM/OFF/MOM/3 TERM	L0112-00
6	096983-01-700	EA	SWITCH/1 SPEED -ON/OFF- BLK	L0108-00
8	117806-01-000	EA	BULB-12V NO.912 1.0 AMPS	GENERAL MOTOR HOMES
9	092696-01-710	EA	HOLDER-LAMP	CB267-02
10	096983-01-708	EA	LENS-LAMP	CC0179
11	136354-05-700	EA	MOTOR-12 VOLT	VC0536-02
13	136354-05-701	EA	BLADE-FAN 7" DIA	VD0216-00
16	096983-01-707	EA	FILTER-MESH	CC0246-00
17	100258-01-701	EA	DAMPER ASSEMBLY (METAL FLAP)	CA0565-00
19	100258-01-700	EA	LABEL-HOOD NOSE	CC0428-00
			CONTACT WINNEBAGO PART SALES FOR UNLISTED COMPONENT(S)	

136354-06-01A, 136354-06-02A

KEY	PART NUMBER	U/M	DESCRIPTION	VENDOR NO.
3	100258-10-700	EA	GAUGE-HOUR METER, SCREW ON	L0150-00 WAS 150
4	096983-01-702	EA	SWITCH - MOM/OFF/MOM/3 TERM	L0112-00
5	096983-01-700	EA	SWITCH/1 SPEED -ON/OFF- BLK	L0108-00
8	117806-01-000	EA	BULB-12V NO.912 1.0 AMPS	GENERAL MOTOR HOMES
9	092696-01-710	EA	HOLDER-LAMP	CB0267-02
10	096983-01-708	EA	LENS-LAMP	CC0179
11	136354-06-700	EA	MOTOR - FAN (CSA)	VC0535-02
13	136354-05-701	EA	BLADE-FAN 7" DIA	VD0216-00
16	096983-01-707	EA	FILTER-MESH	CC0246-00
17	100258-01-701	EA	DAMPER ASSEMBLY (METAL FLAP)	CA0565-00
19	100258-01-700	EA	LABEL-HOOD NOSE	CC0428-00
			CONTACT WINNEBAGO PART SALES FOR UNLISTED COMPONENT(S)	

COPYRIGHT © 2006 WINNEBAGO INDUSTRIES INC.

CABINET & APPLIANCE GROUP (CONTINUED)

COMPONENT PARTS FOR CABINET & APPLIANCE LAYOUT (CONTINUED)

150606-04-01A, 150606-04-02A

KEY	PART NUMBER	U/M	DESCRIPTION	VENDOR NO.
	150606-04-700	EA	RACK - BAKING	FAMI-A104WRM0

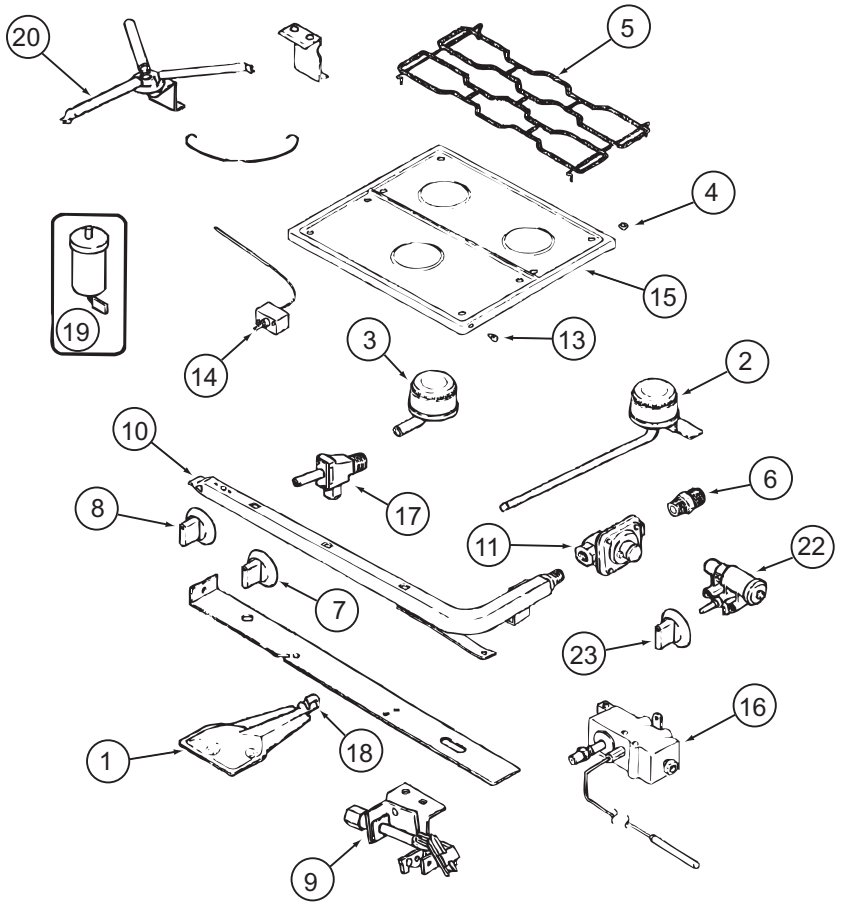

151277-01-01A, 151277-02-01A

151277-01-01A, 151277-02-01A (CONTINUED)

KEY	PART NUMBER	U/M	DESCRIPTION	VENDOR NO.
1	151279-02-700	EA	BURNER - OVEN - W/SHUTTER	74009853
2	112881-04-700	EA	BURNER - TOP/LEFT REAR	74004584
2	126023-01-700	EA	BURNER-TOP (RT-REAR) 5100BTU	74004583
3	112881-04-701	EA	BURNER - TOP/FRONT	74004582
4	102020-01-709	EA	BUMPER-GRATE	8007P020-60
5	112881-04-702	EA	GRATE - BLACK	74007277
6	135065-03-700	EA	FITTING - HALF UNION	74004234
7	128728-01-701	EA	KNOB - BURNER - REAR	74003941 (1 PER)
7	128728-01-702	EA	KNOB - BURNER - FRONT	74003942 (2 PER)
8	151279-02-701	EA	KNOB - THERMOSTAT - BLACK	74009858
9	151279-01-700	EA	PILOT - BURNER - 16” SERIES	74009852
10	151279-02-702	EA	PIPE - MANIFOLD	74009856
11	112881-03-701	EA	REGULATOR KIT W/FITTINGS	12001285
13	102020-01-724	EA	BUMPER-MAIN TOP	8003P008-60
14	151279-02-703	EA	THERMOSTAT	74009855
15	151277-01-700	EA	TOP - MAIN (BLACK)	74007287
16	151279-02-704	EA	ELBOW BLOCK ASM (VALVE-OVEN)	74009864
17	151277-01-701	EA	VALVE/REAR - W/SET SCREW	12002254
17	151277-01-702	EA	VALVE/FRONT - W/SET SCREW	12002246
19	112881-04-705	EA	PUSH RING (ELECTRODE MTG)	7104P002-60
19	126023-01-711	EA	ELECTRODE - IGNITER (ONLY)	7432P077-60
20	126023-01-736	EA	FLASH TUBE EXTENSION (REAR)	74003326
20	126023-01-737	EA	FLASH TUBE EXTENSION (FRONT)	74003327
21	112881-04-708	EA	CLIP-FLASH TUBE	7112P068-60
22	126023-01-735	EA	KIT - IGNITOR TOP BRNER & KNOB	12001296=74002413&4
23	128728-01-707	EA	KNOB - IGNITOR	74003944
26	112881-04-709	EA	SHIELD-SPARK	3604F211-45

CONTACT WINNEBAGO PART SALES FOR UNLISTED COMPONENT(S)

COPYRIGHT © 2006 WINNEBAGO INDUSTRIES INC.

CABINET & APPLIANCE GROUP (CONTINUED)

COMPONENT PARTS FOR CABINET & APPLIANCE LAYOUT (CONTINUED)

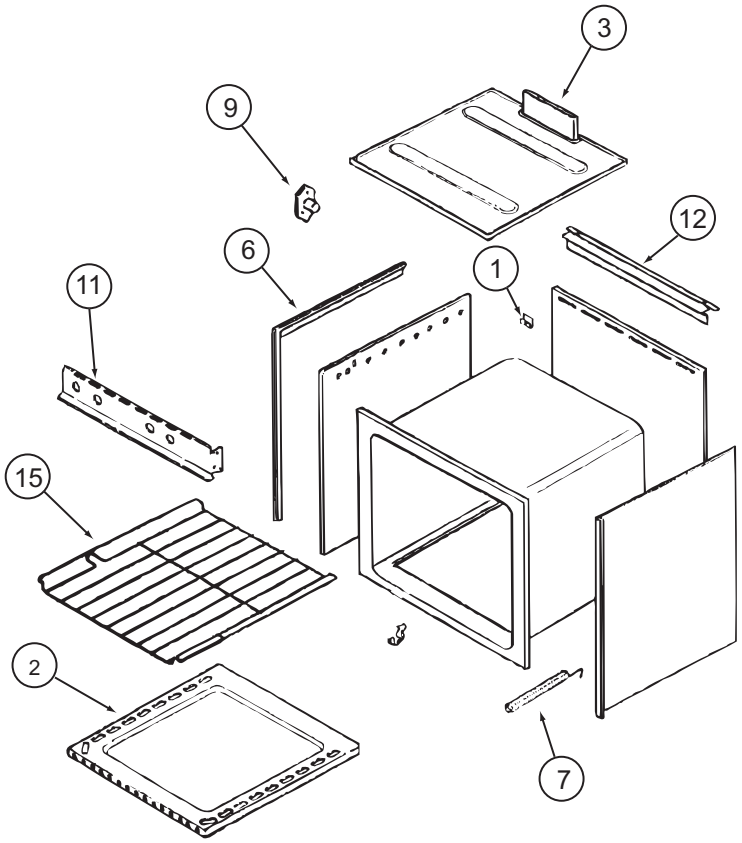

151277-01-01A (CONTINUED)

KEY	PART NUMBER	U/M	DESCRIPTION	VENDOR NO.
1	112881-03-702	EA	CLIP - MAIN TOP	74003998
2	126023-01-731	EA	BOTTOM - OVEN	2205F016-19
3	126023-01-718	EA	FLUE BOX ASSEMBLY	4006W075-80
6	126023-01-713	EA	TRIM - SIDE (RIGHT) BLACK	74002827
6	126023-01-714	EA	TRIM - SIDE (LEFT) BLACK	74002828
7	135066-03-700	EA	SPRING - OVEN DOOR	74001835
9	128728-01-703	EA	PIN/T-NUT F/HINGE	7103P109-60
11	112881-04-707	EA	MANIFOLD - BLACK	74007296
12	112881-01-721	EA	DEFLECT0R/FLUE-BLK-SEALED BR	74002829
15	126023-01-716	EA	RACK - OVEN	74003106
			CONTACT WINNEBAGO PART SALES FOR UNLISTED COMPONENT(S)	

COPYRIGHT © 2006 WINNEBAGO INDUSTRIES INC.

CABINET & APPLIANCE GROUP (CONTINUED)

COMPONENT PARTS FOR CABINET & APPLIANCE LAYOUT (CONTINUED)

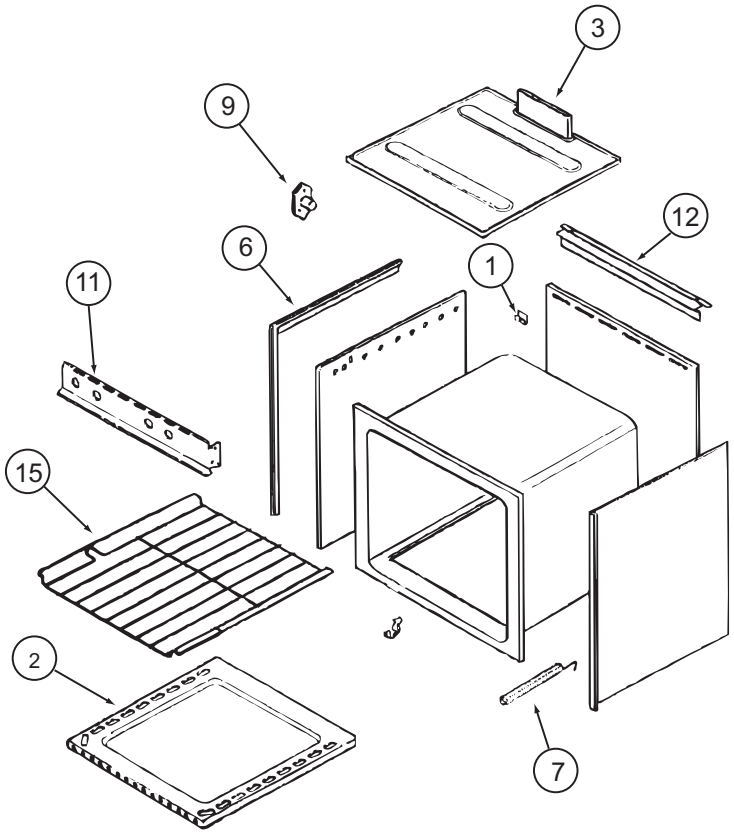

112881-04-01A, 112881-05-01A, 151277-02-01A (CONTINUED)

KEY	PART NUMBER	U/M	DESCRIPTION	VENDOR NO.
1	112881-03-702	EA	CLIP - MAIN TOP	74003998
2	126023-01-731	EA	BOTTOM - OVEN	2205F016-19
3	126023-01-718	EA	FLUE BOX ASSEMBLY	4006W075-80
6	112881-01-719	EA	TRIM-FLAT LH BLACK TEXTURED	74002813
6	112881-01-720	EA	TRIM-FLAT RH BLACK TEXTURED	74002812
7	112881-02-702	EA	SPRING - OVEN DOOR F/1631 MOD	7803P051-60
9	128728-01-703	EA	PIN/T-NUT F/HINGE	7103P109-60
11	112881-04-707	EA	MANIFOLD - BLACK	74007296
12	112881-01-723	EA	DEFLECTOR/FLUE-BLK-NON SEAL	74002809
15	126023-01-716	EA	RACK - OVEN	74003106

CONTACT WINNEBAGO PART SALES FOR UNLISTED COMPONENT(S)

COPYRIGHT © 2006 WINNEBAGO INDUSTRIES INC.

CABINET & APPLIANCE GROUP (CONTINUED)

COMPONENT PARTS FOR CABINET & APPLIANCE LAYOUT (CONTINUED)

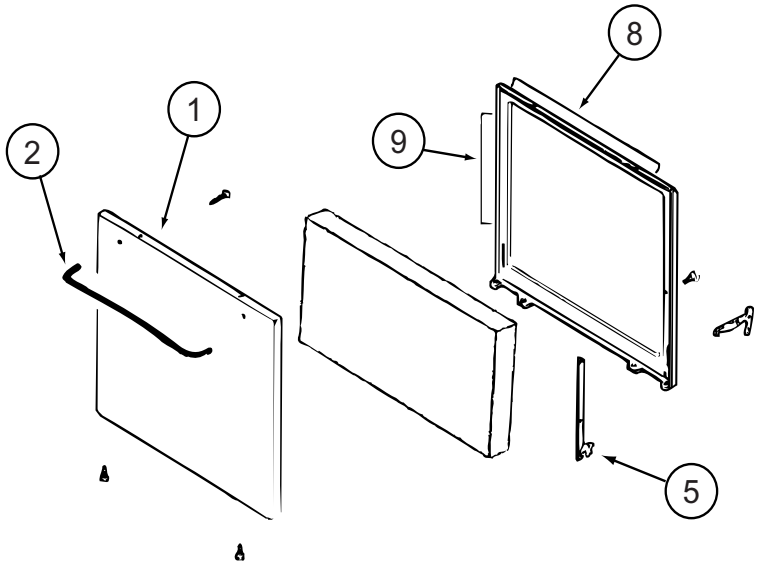

151277-01-01A (CONTINUED)

KEY	PART NUMBER	U/M	DESCRIPTION	VENDOR NO.
1	102022-01-704	EA	GLASS-OUTER	7902P261-60
1	112881-01-713	EA	DOOR/OVEN-TEXT/BLK NO WINDOW	2401F126-70
2	128727-01-701	EA	HANDLE - OVEN DOOR	74003929
5	151277-01-704	EA	HINGE KIT-OVEN DR/LT	12400028
5	151277-01-705	EA	HINGE KIT-OVEN DR/RT	12400029
8	126023-01-732	EA	SEAL/OVEN DR TOP	7212P014-60
9	135066-03-714	EA	SEAL - OVEN DOOR SIDES	7212P039-60
			CONTACT WINNEBAGO PART SALES FOR UNLISTED COMPONENT(S)	

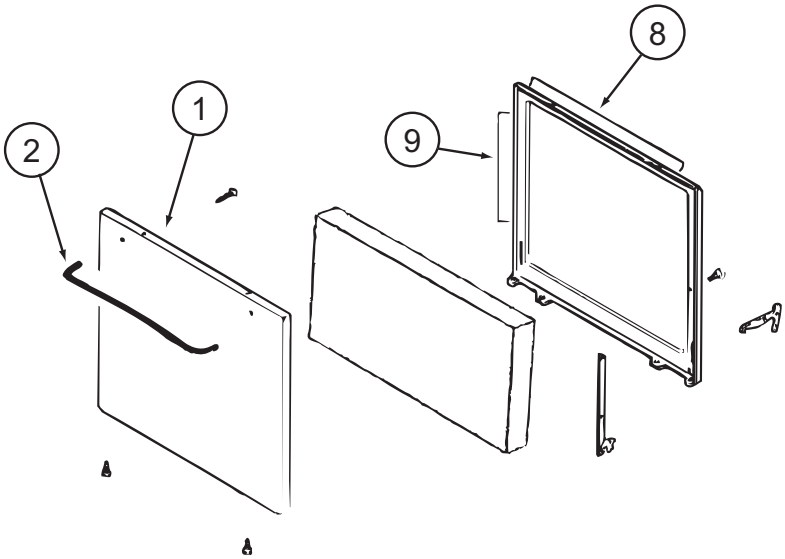

112881-04-01A, 112881-05-01A, 151277-02-01A (CONTINUED)

KEY	PART NUMBER	U/M	DESCRIPTION	VENDOR NO.
1	112881-01-713	EA	DR-TXT/BLK NO WNDW (112881-05/151277)	2401F126-70
1	112881-02-705	EA	DOOR-TXT/BLK-F/WINDOW (112881-04)	74001273
2	128727-01-701	EA	HANDLE - OVEN DOOR	74003929
8	126023-01-732	EA	SEAL/OVEN DR TOP	7212P014-60
9	126023-01-733	EA	SEAL/OVEN DR SIDES(2PCS)	7212P038-60
			CONTACT WINNEBAGO PART SALES FOR UNLISTED COMPONENT(S)	

COPYRIGHT © 2006 WINNEBAGO INDUSTRIES INC.

CHASSIS GROUP

FRAME

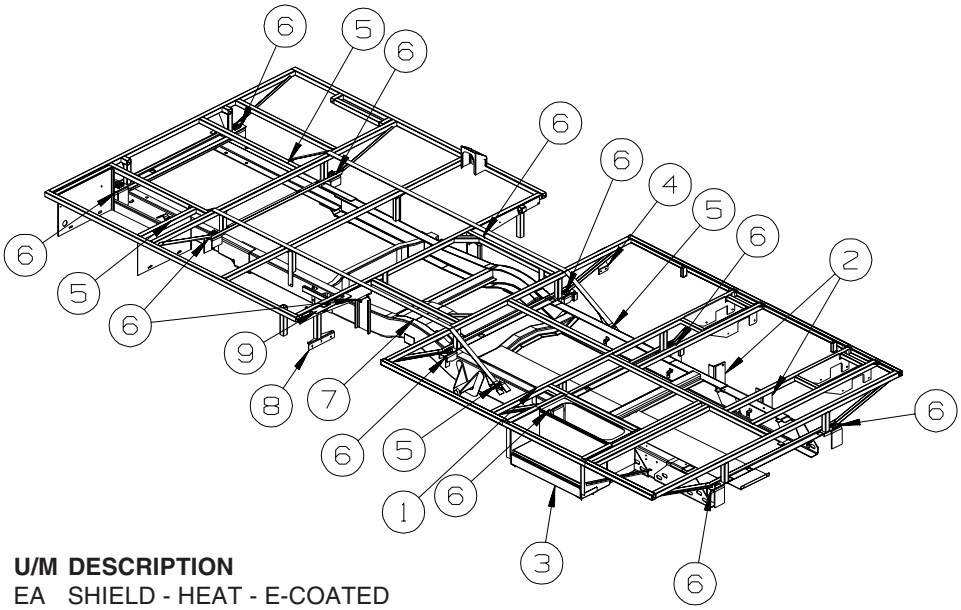

KEY	PART NUMBER	U/M	DESCRIPTION
1	145027-03-02B	EA	SHIELD - HEAT - E-COATED
			FROM: 00-00-00 THRU: 11-27-05
1	145027-01-02B	EA	SHIELD - HEAT - E-COATED
			FROM: 11-28-05 THRU: 99-99-99
2	136042-01-02B	EA	BRACKET - LP SUPPORT - E - COATED
3	135458-04-02B	EA	BOX - ENTRY STEP - E-COATED
4	141003-01-02B	EA	PLATE - VALVE - AIR SPRING - E-COATED - AIR SPRINGS REAR
5	141901-02-02B	EA	PLATE - TIE DOWN - E - COATED
6	135712-01-02B	EA	PLATE - BODY MOUNT - E - COATED
7	158704-01-02B	EA	SHIELD/HEAT - E-COATED
			FROM: 11-28-05 THRU: 99-99-99
8	157252-01-02B	EA	SUPPORT/PANEL - ROCKGUARD - E-COATED
			FROM: 09-07-05 THRU: 99-99-99
9	157253-01-02B	EA	SUPPORT/ANGLE - ROCKGUARD - E-COATED
			FROM: 09-07-05 THRU: 99-99-99

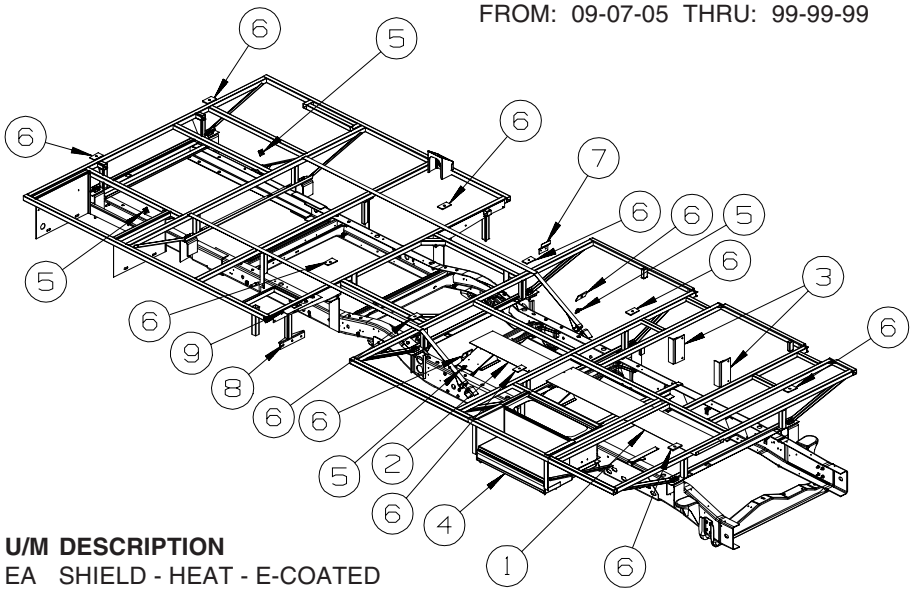

CHEVY

KEY	PART NUMBER	U/M	DESCRIPTION
1	135676-13-02B	EA	SHIELD - HEAT - E-COATED
2	145027-06-02B	EA	SHIELD - HEAT - E-COATED
3	136042-01-02B	EA	BRACKET - LP SUPPORT - E-COATED
4	135458-04-02B	EA	BOX - ENTRY STEP - E-COATED
5	141901-02-02B	EA	PLATE - TIE DOWN - E-COATED
6	135712-01-02B	EA	PLATE - BODY MOUNT - E-COATED
7	141003-01-02B	EA	PLATE - VALVE - AIR SPRING - E-COATED
8	157252-01-02B	EA	SUPPORT/PANEL - ROCKGUARD - E-COATED
			FROM: 09-07-05 THRU: 99-99-99
9	157253-01-02B	EA	SUPPORT/ANGLE - ROCKGUARD - E-COATED
			FROM: 09-07-05 THRU: 99-99-99

COPYRIGHT © 2006 WINNEBAGO INDUSTRIES INC.

CHASSIS GROUP (CONTINUED)

EXHAUST

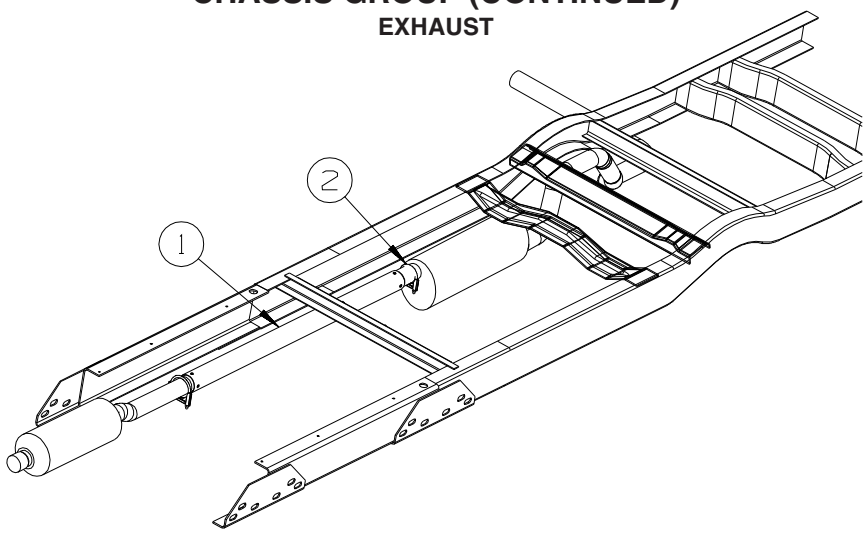

KEY	PART NUMBER	U/M	DESCRIPTION
1	111478-07-000	EA	EXHAUST PIPE - DOUBLE WALL STAINLESS STEEL - 25.9"
2	094918-06-000	EA	CLAMP - EXHAUST - 3" - HEAVY DUTY

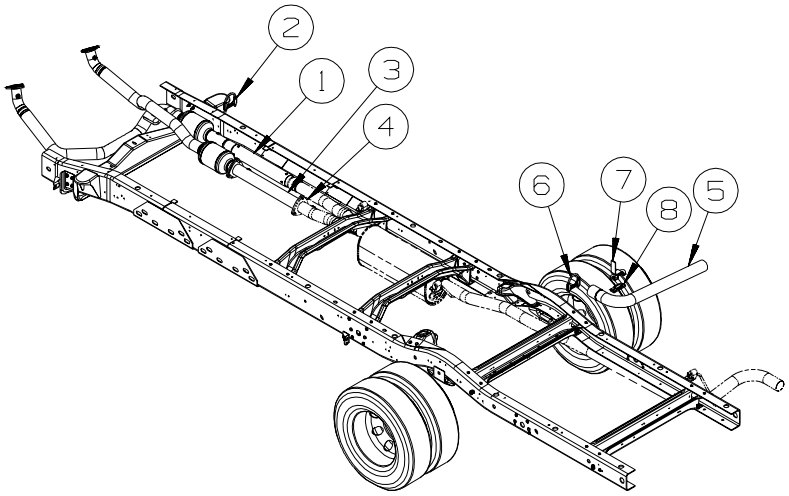

CHEVY

KEY	PART NUMBER	U/M	DESCRIPTION
1	111478-10-000	EA	EXHAUST PIPE - DOUBLE WALL STAINLESS STEEL - 24"
2	007125-08-000	EA	CLAMP - MUFFLER - 3"DIAMETER
3	155581-04-000	EA	PIPE - EXHAUST - 24" EXTENSION - W/OXYGEN OUTLET
4	124610-01-000	EA	GASKET - EXHAUST
5	155696-01-000	EA	PIPE - EXHAUST/TAIL
6	094918-06-000	EA	CLAMP - EXHAUST - 3" - HEAVY DUTY
7	117380-05-02B	EA	HANGER - TAILPIPE - E-COATED
8	095190-01-000	EA	HANGER - EXHAUST - 4" X 1.4"

COPYRIGHT © 2006 WINNEBAGO INDUSTRIES INC.

CHASSIS GROUP (CONTINUED)

HITCH

KEY	PART NUMBER	U/M	DESCRIPTION
	154054-02-01A	EA	HITCH RECEIVER - BOLT ON CLASS III - BLACK

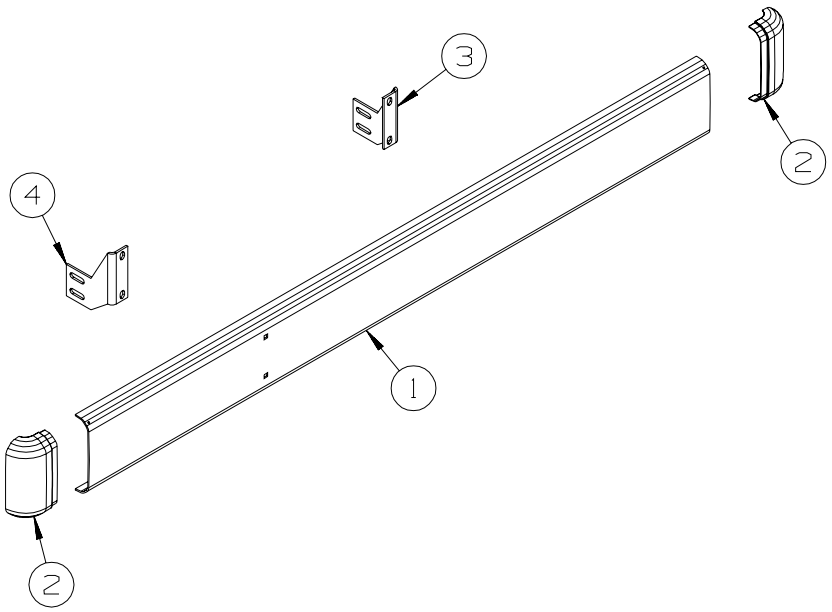

REAR BUMPER

KEY	PART NUMBER	U/M	DESCRIPTION
1	103099-05-02A	EA	BUMPER - REAR - 91.7" - BRIGHT WHITE
2	106147-02-03A	EA	END CAP - BUMPER - BRIGHT WHITE
3	136945-03-02B	EA	BRACKET - BUMPER - REAR - E-COATED
4	136945-04-02B	EA	BRACKET - BUMPER - REAR - E-COATED
	038327-01-000	EA	TAPE - ANTI-SLIP - 2” X 60’

COPYRIGHT © 2006 WINNEBAGO INDUSTRIES INC.

CHASSIS GROUP (CONTINUED)

FUEL

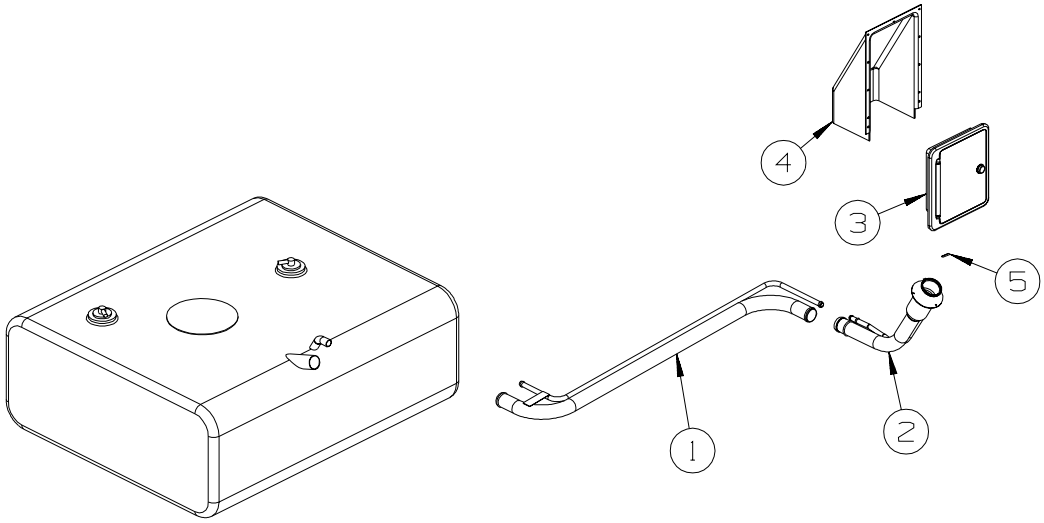

KEY	PART NUMBER	U/M	DESCRIPTION
1	147587-01-01A	EA	DOOR - FUEL FILL
	138290-03-000	EA	CASE - W/CAM - W/O CYLINDER/KEY
2	135557-02-01A	EA	SHROUD - FUEL FILL - UPPER - 13.5" X 8.2"
3	151095-01-000	EA	NECK - FILLER/MAIN/EXTENSION
4	148789-01-000	EA	NECK - FUEL FILL
5	099069-01-000	FT	SEAL - RUBBER - CLOSED SPONGE - .5" WIDE X .12" THICK-BLK

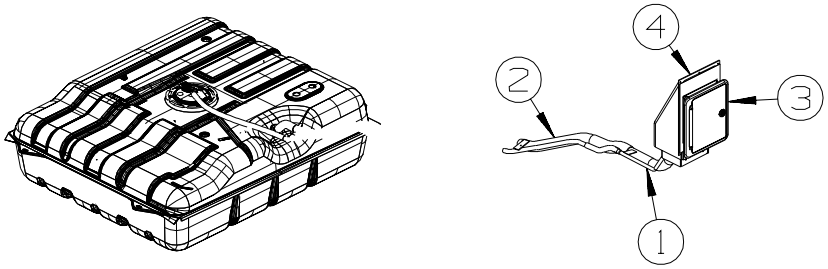

CHEVY

KEY	PART NUMBER	U/M	DESCRIPTION
1	155829-01-000	EA	NECK - FUEL FILL - CHEVY
2	156001-04-000	EA	NECK - FILLER/EXTENSION - GM
			FROM: 00-00-00 THRU: 01-22-06
2	156001-08-000	EA	NECK - FILLER/EXTENSION - W/FLAP VALVE - GM
			FROM: 01-23-06 THRU: 99-99-99
	158690-01-000	EA	VALVE/CHECK - FUEL FILL
			FROM: 01-23-06 THRU: 99-99-99
3	147587-01-01A	EA	DOOR - FUEL FILL
	138290-03-000	EA	CASE - W/CAM - W/O CYLINDER/KEY
4	135557-01-01A	EA	SHROUD - FUEL FILL - UPPER - 16” X 8.2”

COPYRIGHT © 2006 WINNEBAGO INDUSTRIES INC.

CHASSIS GROUP (CONTINUED)

SPARE TIRE

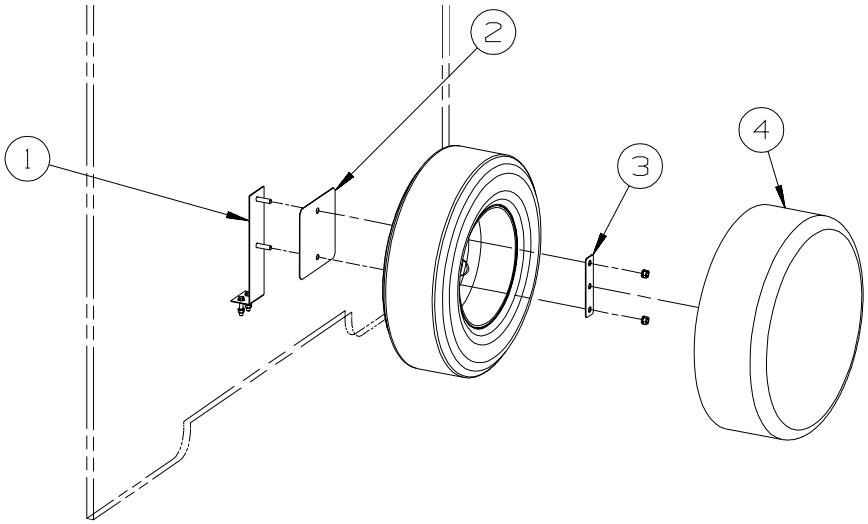

322E, 322R

KEY	PART NUMBER	U/M	DESCRIPTION
1	105209-05-C52	EA	BRACKET ASSEMBLY - SPARE TIRE
2	105208-01-000	EA	PLATE - SPARE TIRE
3	143547-01-02B	EA	RETAINER - SPARE TIRE - E-COATED
4	073322-09-S01	EA	COVER - TIRE - 30"
	073322-50-000	EA	COVER - UNIVERSAL LINER
	083425-14-000	EA	TIRE - LT225/75R16 LRE - MICHELIN LTX M/S
	083617-04-000	EA	WHEEL - STEEL - 6" X 16" - FORD - 2004 CHASSIS
	083617-05-000	EA	WHEEL-STL.16.0X6,06E350/450 , ACCURIDE 29943 - 2006 CHASSIS
	051377-04-000	EA	VALVE STEM - .5" X 2" - 2004 CHASSIS
	051377-07-000	EA	VALVE STEM - 2006 CHASSIS

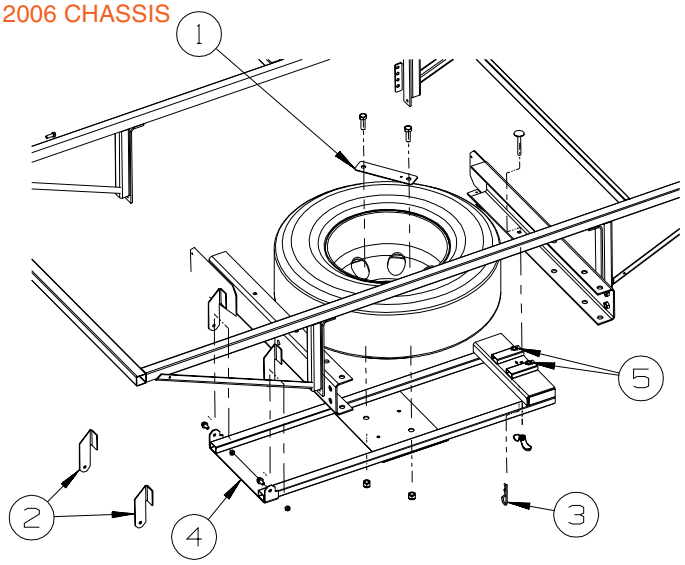

324V, 325F

KEY	PART NUMBER	U/M	DESCRIPTION
1	116338-02-02B	EA	BRACKET/CLAMP - SPARE TIRE - E-COATED
2	116349-04-02B	EA	BRACKET/HINGE - SPARE TIRE - E-COATED
			FROM: 00-00-00 THRU: 03-19-06
2	159923-01-02B	EA	BRACKET/HINGE - SPARE TIRE - E-COATED - NOT ILLUSTRATED
			FROM: 03-20-06 THRU: 99-99-99
3	034513-01-000	EA	PIN - HITCH - 3/16" WIRE
4	135796-02-02B	EA	CRADLE - SPARE TIRE - E-COATED
5	069726-02-000	EA	BUMPER - .88" OD X .40" THICK - BLACK
	083425-14-000	EA	TIRE - LT225/75R16 LRE - MICHELIN LTX M/S - FORD
	144388-02-000	EA	TIRE - LT225/75R16 LRE - UNIROYAL LAREDO - CHEVY
	083617-04-000	EA	WHEEL - STEEL - 6" X 16" - 2004 FORD
	083617-05-000	EA	WHEEL-STL.16.0X6,06E350/450 , ACCURIDE 29943 - 2006 FORD
	144386-01-000	EA	WHEEL - STEEL - 6.5" X 16" - 8 BOLT - CHEVY
	051377-04-000	EA	VALVE STEM - .5" X 2" - 2004 FORD
	051377-07-000	EA	VALVE STEM - 2006 FORD
	155645-01-000	EA	VALVE STEM - 1.25" - CHEVY

COPYRIGHT © 2006 WINNEBAGO INDUSTRIES INC.

CHASSIS GROUP (CONTINUED)

SPARE TIRE (CONTINUED)

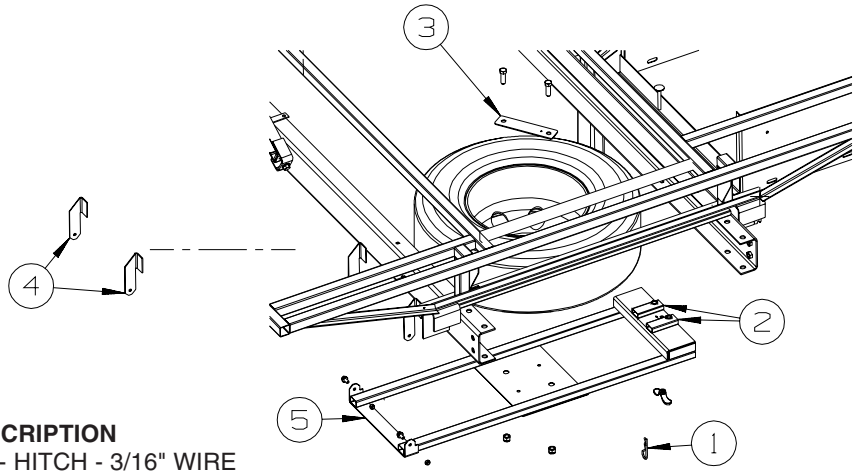

326A, 327L

KEY	PART NUMBER	U/M	DESCRIPTION
1	034513-01-000	EA	PIN - HITCH - 3/16" WIRE
2	069726-02-000	EA	BUMPER - .88" OD X .40" THICK - BLACK
3	116338-02-02B	EA	BRACKET - SPARE TIRE - E-COATED
4	116349-04-02B	EA	BRACKET/HINGE - SPARE TIRE - E-COATED
			FROM: 00-00-00 THRU: 03-19-06
4	159923-01-02B	EA	BRACKET/HINGE - SPARE TIRE - E-COATED - NOT ILLUSTRATED
			FROM: 03-20-06 THRU: 99-99-99
5	135796-02-02B	EA	CRADLE - SPARE TIRE - E-COATED
	083425-14-000	EA	TIRE - LT225/75R16 LRE - MICHELIN LTX M/S - FORD
	144388-02-000	EA	TIRE - LT225/75R16 LRE - UNIROYAL LAREDO - CHEVY
	083617-04-000	EA	WHEEL - STEEL - 6" X 16" - 2004 FORD
	083617-05-000	EA	WHEEL-STL.16.0X6,06E350/450 - ACCURIDE 29943 - 2006 FORD
	144386-01-000	EA	WHEEL - STEEL - 6.5" X 16" - 8 BOLT - CHEVY
	051377-04-000	EA	VALVE STEM - .5" X 2" - 2004 FORD
	051377-07-000	EA	VALVE STEM - 2006 FORD
	155645-01-000	EA	VALVE STEM - 1.25" - CHEVY

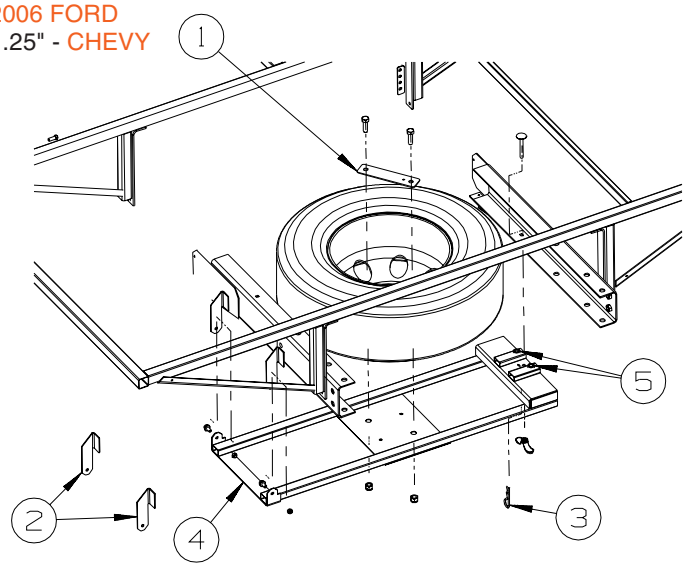

329B/SB, 329K

KEY	PART NUMBER	U/M	DESCRIPTION
1	116338-02-02B	EA	BRACKET/CLAMP - SPARE TIRE - E-COATED
2	116349-04-02B	EA	BRACKET/HINGE - SPARE TIRE - E-COATED
			FROM: 00-00-00 THRU: 03-19-06
2	159923-01-02B	EA	BRACKET/HINGE - SPARE TIRE - E-COATED - NOT ILLUSTRATED
			FROM: 03-20-06 THRU: 99-99-99
3	034513-01-000	EA	PIN - HITCH - 3/16" WIRE
4	135796-02-02B	EA	CRADLE - SPARE TIRE - E-COATED
5	069726-02-000	EA	BUMPER - .88" OD X .40" THICK - BLACK
	083425-14-000	EA	TIRE - LT225/75R16 LRE - MICHELIN LTX M/S - FORD
	144388-02-000	EA	TIRE - LT225/75R16 LRE - UNIROYAL LAREDO - CHEVY
	083617-04-000	EA	WHEEL - STEEL - 6" X 16" - 2004 FORD
	083617-05-000	EA	WHEEL-STL.16.0X6,06E350/450 , ACCURIDE 29943 - 2006 FORD
	144386-01-000	EA	WHEEL - STEEL - 6.5" X 16" - 8 BOLT - CHEVY
	051377-04-000	EA	VALVE STEM - .5" X 2" - 2004 FORD
	051377-07-000	EA	VALVE STEM - 2006 FORD
	155645-01-000	EA	VALVE STEM - 1.25" - CHEVY

COPYRIGHT © 2006 WINNEBAGO INDUSTRIES INC.

CHASSIS GROUP (CONTINUED)

SPARE TIRE (CONTINUED)

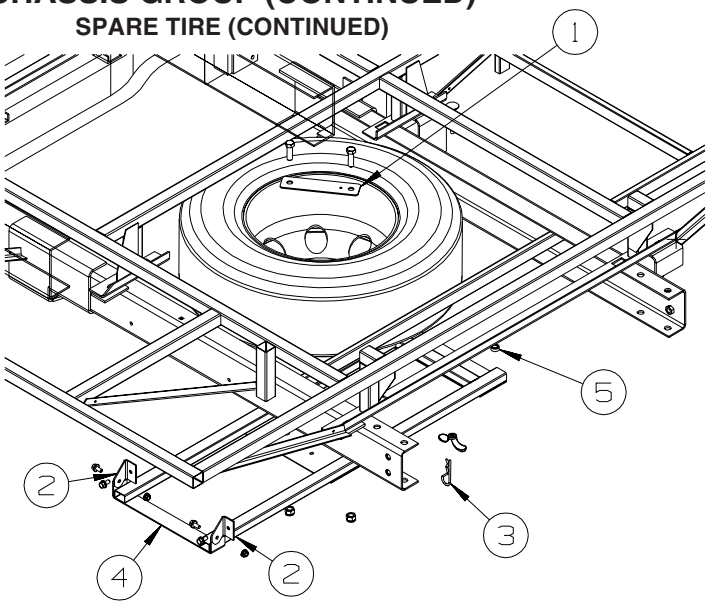

331C/SC
331K

KEY	PART NUMBER	U/M	DESCRIPTION
1	116338-02-02B	EA	BRACKET/CLAMP - SPARE TIRE - E-COATED
2	116349-01-02B	EA	BRACKET/HINGE - SPARE TIRE - E-COATED
			FROM: 00-00-00 THRU: 03-19-06
2	159923-01-02B	EA	BRACKET/HINGE - SPARE TIRE - E-COATED - NOT ILLUSTRATED
			FROM: 03-20-06 THRU: 99-99-99
3	034513-01-000	EA	PIN - HITCH - 3/16" WIRE
4	135796-04-02B	EA	CRADLE - SPARE TIRE - E-COATED
5	069726-02-000	EA	BUMPER - .88" OD X .40" THICK - BLACK
	083425-14-000	EA	TIRE - LT225/75R16 LRE - MICHELIN LTX M/S - FORD
	144388-02-000	EA	TIRE - LT225/75R16 LRE - UNIROYAL LAREDO - CHEVY
	083617-04-000	EA	WHEEL - STEEL - 6" X 16" - 2004 FORD
	083617-05-000	EA	WHEEL-STL.16.0X6,06E350/450 , ACCURIDE 29943 - 2006 FORD
	144386-01-000	EA	WHEEL - STEEL - 6.5" X 16" - 8 BOLT - CHEVY
	051377-04-000	EA	VALVE STEM - .5" X 2" - 2004 FORD
	051377-07-000	EA	VALVE STEM - 2006 FORD
	155645-01-000	EA	VALVE STEM - 1.25" - CHEVY

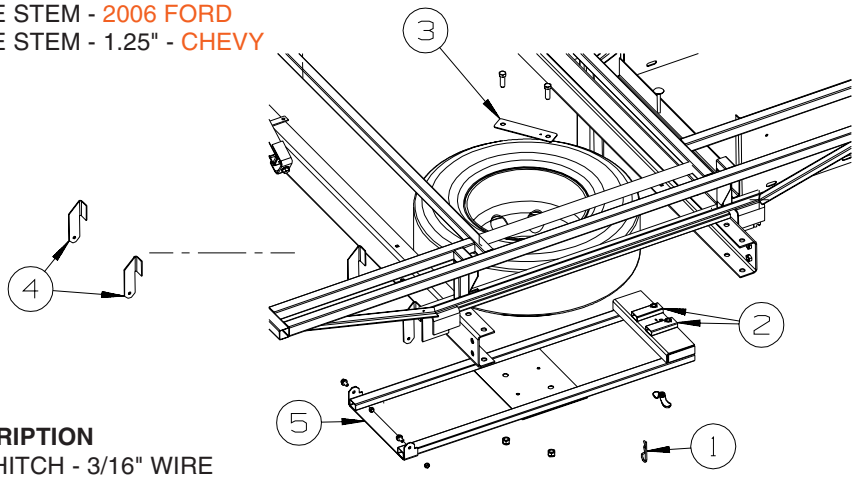

332G

KEY	PART NUMBER	U/M	DESCRIPTION
1	034513-01-000	EA	PIN - HITCH - 3/16" WIRE
2	069726-02-000	EA	BUMPER - .88" OD X .40" THICK - BLACK
3	116338-02-02B	EA	BRACKET/CLAMP - SPARE TIRE - E-COATED
4	116349-04-02B	EA	BRACKET/HINGE - SPARE TIRE - E-COATED
			FROM: 00-00-00 THRU: 03-19-06
4	159923-01-02B	EA	BRACKET/HINGE - SPARE TIRE - E-COATED - NOT ILLUSTRATED
			FROM: 03-20-06 THRU: 99-99-99
5	135796-02-02B	EA	CRADLE - SPARE TIRE - E-COATED
	083425-14-000	EA	TIRE - LT225/75R16 LRE - MICHELIN LTX M/S - FORD
	144388-02-000	EA	TIRE - LT225/75R16 LRE - UNIROYAL LAREDO - CHEVY
	083617-04-000	EA	WHEEL - STEEL - 6" X 16" - 2004 FORD
	083617-05-000	EA	WHEEL-STL.16.0X6,06E350/450 , ACCURIDE 29943 - 2006 FORD
	144386-01-000	EA	WHEEL - STEEL - 6.5" X 16" - 8 BOLT - CHEVY
	051377-04-000	EA	VALVE STEM - .5" X 2" - 2004 FORD
	051377-07-000	EA	VALVE STEM - 2006 FORD
	155645-01-000	EA	VALVE STEM - 1.25" - CHEVY

COPYRIGHT © 2006 WINNEBAGO INDUSTRIES INC.

CHASSIS GROUP (CONTINUED)

SUSPENSION

KEY	PART NUMBER	U/M	DESCRIPTION
*	144887-02-000	EA	AIRSPRING - 4" DIAMETER/TWIN BAG SYSTEM - FIRESTONE - FORD
*	156618-01-000	EA	AIRSPRING - AIR BAG KIT - GMT610/14050 CHEVY - FIRESTONE - CHEVY

***COMPONENT PARTS LISTED LATER IN THIS GROUP**

COMPONENT PARTS FOR SUSPENSION

144887-02-000

KEY	PART NUMBER	U/M	DESCRIPTION	VENDOR NO.
	084086-05-704	EA	BRACKET CLAMP	5086
	084086-05-706	EA	VALVE-INFLATION,PUSH TO CONN	3032
	144887-02-700	EA	AIRSPRING - BAG ONLY	9000
	144887-02-701	EA	BRACKET - LEFT UPPER	5390
	144887-02-702	EA	BRACKET - RIGHT UPPER	5389
	144887-02-703	EA	BRACKET - LOWER RH/LH	5391
	144887-02-704	EA	DISK	5204
	144887-02-705	EA	TUBING/AIR LINE - 18'	0937

156618-01-000

KEY	PART NUMBER	U/M	DESCRIPTION	VENDOR NO.
	084086-01-709	EA	SHIELD-HEAT-224 CR SYSTEM	21-1004
	084086-01-713	EA	BRACKET-AXLE STRAP, 4"	21-1163
	156618-01-700	EA	BAG - AIR SPRING - 1 ONLY	6762
	156618-01-701	EA	BRACKET - LEFT UPPER	5478
	156618-01-702	EA	BRACKET - RIGHT UPPER	5221
	156618-01-703	EA	BRACKET - LOWER RH/LH	5472

COPYRIGHT © 2006 WINNEBAGO INDUSTRIES INC.

CHASSIS GROUP (CONTINUED)

WHEEL, TIRE, COVERS &/OR LINERS

KEY	PART NUMBER	U/M	DESCRIPTION
	080208-02-000	EA	BAR/LEVERAGE - LUG WRENCH - 13/16" DIA - DELUXE FEATURE PACKAGE
	080208-06-000	EA	LUG WRENCH - 1"/1.1" SOCKETS X 16.4" LONG - DELUXE FEATURE PACKAGE
	112358-01-000	EA	WRENCH - LUG - 7/8" - L-SHAPE
			FROM: 00-00-00 THRU: 01-15-06
	083425-14-000	EA	TIRE - LT225/75R16 LRE - MICHELIN LTX M/S - FORD
	144388-02-000	EA	TIRE - LT225/75R16 LRE - UNIROYAL LAREDO - CHEVY
	083617-04-000	EA	WHEEL - STEEL - 6" X 16" - 2004 FORD
	083617-05-000	EA	WHEEL-STL.16.0X6,06E350/450 - ACCURIDE 29943 - 2006 FORD
	144386-01-000	EA	WHEEL - STEEL - 6.5" X 16" - 8 BOLT - CHEVY
	149749-01-000	EA	WHEEL - ALUMINUM - 6" X 16" - FRONT - FORD E450 - DELUXE FEATURE PACKAGE, FORD
	149749-02-000	EA	WHEEL - ALUMINUM - 6" X 16" - REAR - FORD E450 - DELUXE FEATURE PACKAGE, FORD
	156797-01-000	EA	WHEEL - ALUMINUM/FRONT - 16" X 6.5" - 8 BOLT - CHEVY - DELUXE FEATURE PACKAGE, CHEVY
	156797-02-000	EA	WHEEL - ALUMINUM/REAR - 16" X 6.5" - 8 BOLT - CHEVY - DELUXE FEATURE PACKAGE, CHEVY
	149749-03-000	EA	COVER/HUB - FRONT - FORD E450 - DELUXE FEATURE PACKAGE, FORD
	149749-04-000	EA	COVER/HUB - REAR - FORD E450 - DELUXE FEATURE PACKAGE, FORD
	156797-03-000	EA	COVER/HUB - FRONT - ALUMINUM WHEEL - CHEVY - DELUXE FEATURE PACKAGE, CHEVY
	156797-04-000	EA	COVER/HUB - FRONT - ALUMINUM WHEEL - CHEVY - DELUXE FEATURE PACKAGE, CHEVY
	149749-05-000	EA	COVER/NUT - FORD E450 - DELUXE FEATURE PACKAGE, FORD
	156797-05-000	EA	COVER/NUT - 1 1/16" HEX - ALUMINUM WHEEL - CHEVY - DELUXE FEATURE PACKAGE, CHEVY
			FROM: 00-00-00 THRU: 08-02-05
	149749-05-000	EA	COVER/NUT - FORD E450 - DELUXE FEATURE PACKAGE, CHEVY
			FROM: 08-03-05 THRU: 08-02-05
	149749-06-000	EA	NUT/WHEEL - 9/16"-18 - LOW PROFILE - FORD E450 - DELUXE FEATURE PACKAGE, FORD
	156797-06-000	EA	NUT/LUG - 14MM X 1.5 - ALUMINUM WHEEL - CHEVY - DELUXE FEATURE PACKAGE, CHEVY
*	109443-05-000	EA	WHEEL COVER SET - GM 16" STAINLESS/8 LUG (1 SET=4 COVERS)
*	110435-13-000	EA	LINER - WHEEL - SET OF 4 - 16" (8 HOLE) - FORD
*	144647-01-000	EA	LINER - WHEEL SET (SET=4) 16" - GM - CHEVY
	077030-01-000	EA	EXTENSION - VALVE STEM - 1.25" - METAL
	095012-05-000	EA	EXTENSION/VALVE STEM - LIVE - 5"
	095012-06-000	EA	STABILIZER/VALVE EXTENSION - LIVE - 2" - FORD
	095012-07-000	EA	STABILIZER/VALVE EXTENSION - LIVE - 4" - CHEVY
	051377-04-000	EA	VALVE STEM - .5" X 2" - 2004 FORD
	051377-07-000	EA	VALVE STEM - 2006 FORD
	155645-01-000	EA	VALVE STEM - 1.25" - CHEVY

***COMPONENT PARTS LISTED LATER IN THIS GROUP**

COMPONENT PARTS FOR WHEEL, TIRE, COVERS &/OR LINERS

109443-05-000

KEY	PART NUMBER	U/M	DESCRIPTION	VENDOR NO.
	098532-01-700	EA	COVER-FAKE LUG NUT (PLASTIC)	SHAU-LNC
	109443-05-700	EA	WHEEL COVER - 16"SS EA=1	SHFM16-CVR

110435-13-000

KEY	PART NUMBER	U/M	DESCRIPTION	VENDOR NO.
	110435-01-711	EA	DECAL-CENTER CAP, 2"	2" DECAL
	110435-10-705	EA	TOOL/JAMB NUT INSTALLATION	V195P7-TOL
	110435-13-700	EA	LINER - WHEEL - FRONT	V160F7-FWC
	110435-13-701	EA	LINER - WHEEL - REAR	V160F7-RWC
	110435-13-702	EA	JAMB NUT W/COVER - 9/16"	V160F7-EJN

144647-01-000

KEY	PART NUMBER	U/M	DESCRIPTION	VENDOR NO.
	110435-01-711	EA	DECAL-CENTER CAP, 2"	2" DECAL
	144647-01-700	EA	WHEEL COVER - FRONT/1 PIECE	FL60-FWC
	144647-01-701	EA	WHEEL COVER - REAR/1 PIECE	FL60-RWC

BRAKELINE

KEY	PART NUMBER	U/M	DESCRIPTION
	088498-01-000	EA	UNION - INVERTED FLARE - BRASS - 3/16 - FORD CHASSIS

COPYRIGHT © 2006 WINNEBAGO INDUSTRIES INC.

CURTAIN & CUSHION GROUP

NOTICE

IN ORDER TO ASSIST OUR PARTS SALES DEPT. IN PROVIDING INTERIOR SOFTWARE ITEMS, PLEASE INCLUDE THE SERIAL NUMBER AND THE COLOR CODE NUMBER FROM THE VEHICLE CERTIFICATION LABEL WHEN ORDERING. THIS LABEL IS LOCATED ON THE LEFT SIDEWALL AT THE END OF THE DASH (A-BODY),OR ON THE DRIVER'S DOOR LATCH PLATE (C-BODY).

AN EXAMPLE OF A COLOR CODE NUMBER IS B07, WHICH DESIGNATES AN OVERALL COLOR SCHEME OF A PARTICULAR UNIT. THE COLOR LISTED AFTER THE ITEM DESCRIPTION ON THE MICROFICHE, INDICATES THE OVERALL UNIT COLOR. ORDER THE ITEM YOU DESIRE ACCORDING TO UNIT COLOR CODE. IF ALL COLORS USE THE SAME ITEM NO COLOR CODE WILL BE NOTED.

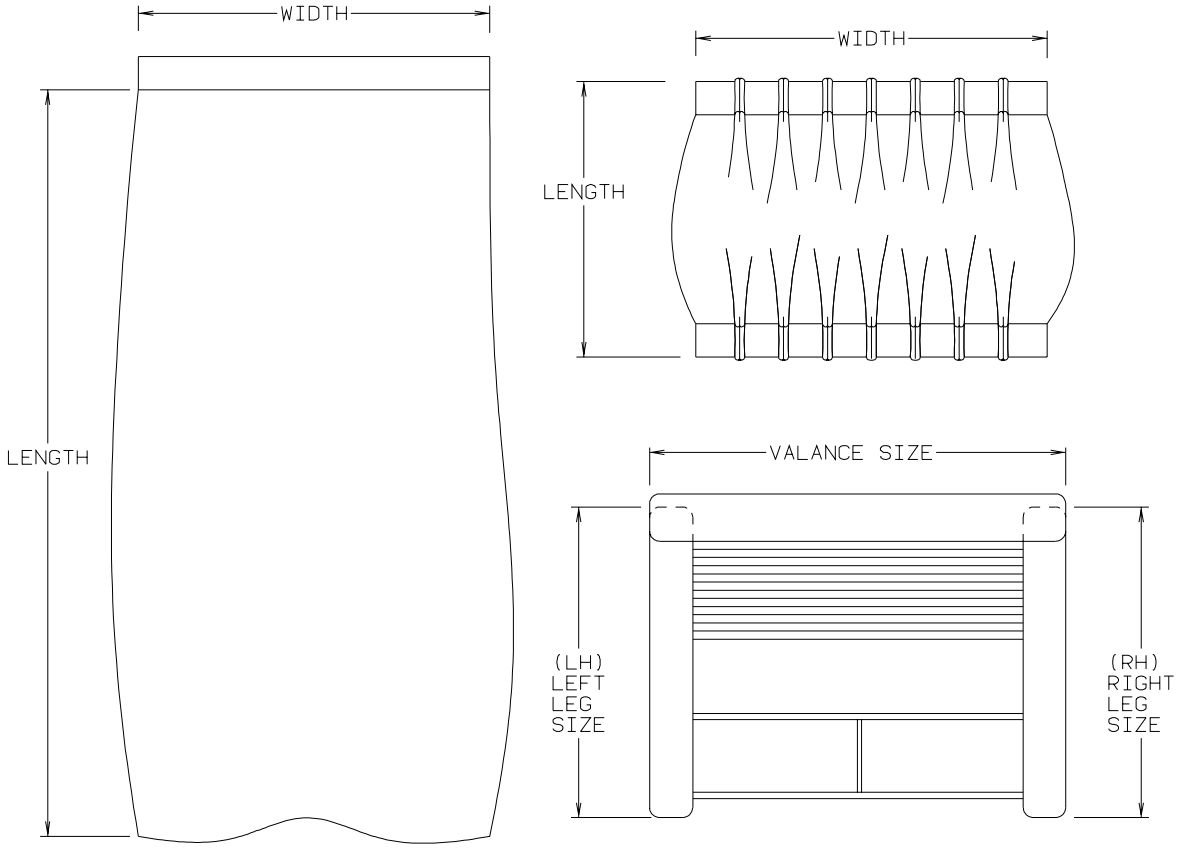

NOTE: USE THIS ILLUSTRATION WHEN DETERMINING LENGTH AND WIDTH MEASUREMENTS FOR CURTAINS. YOU WILL NOTE THE WIDTH MEASUREMENT IS TAKEN ON THE TOP OF THE CURTAIN WITH THE CURTAIN FULLY EXTENDED. THE LENGTH MEASUREMENT IS TAKEN FROM TOP TO BOTTOM. LEFT AND RIGHT WINDOW LEGS ARE DETERMINED WHEN FACING THE WINDOW.

COPYRIGHT © 2006 WINNEBAGO INDUSTRIES INC.

CURTAIN & CUSHION GROUP (CONTINUED)

CUSHION LAYOUT

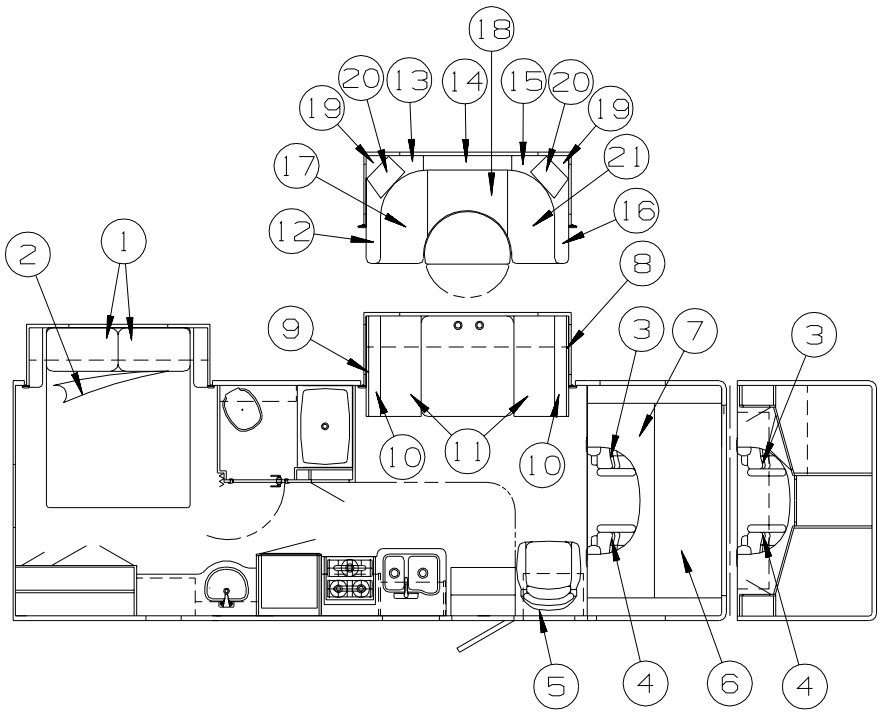

KEY	PART NUMBER	U/M	DESCRIPTION
1	104176-04-T11	EA	PILLOW SHAM - 30" (T11, TK0)
1	104176-09-T12	EA	PILLOW SHAM - 30" (T12, TK1)
1	104176-04-T13	EA	PILLOW SHAM - 30" (T13, TK2)
2	132336-09-T11	EA	BEDSPREAD/CAP - 60" X 75" (T11, TK0)
2	132336-09-T12	EA	BEDSPREAD/CAP - 60" X 75" (T12, TK1)
2	132336-09-T13	EA	BEDSPREAD/CAP - 60" X 75" (T13, TK2)
3	149587-07-T11	EA	SEAT - BUCKET/DRIVER (T11, TK0) - FORD
3	149587-01-T12	EA	SEAT - BUCKET/DRIVER (T12, TK1) - FORD
3	149587-07-T13	EA	SEAT - BUCKET/DRIVER (T13, TK2) - FORD
3	149587-03-S01	EA	SEAT - BUCKET/DRIVER - LEATHER - MEDIUM FLINT - EARLY FORD LEATHER
3	149587-03-T11	EA	SEAT - BUCKET/DRIVER - LTHR - MEDIUM PEBBLE (T11, T12, TK0, TK1) - FORD - LEATHER
3	149587-03-T13	EA	SEAT - BUCKET/DRIVER - LEATHER - MEDIUM PEBBLE (T13, TK2) - FORD - LEATHER
3	149587-13-T11	EA	SEAT - BUCKET/DRIVER (T11, TK0) - CHEVY
3	149587-11-T12	EA	SEAT - BUCKET/DRIVER (T12, TK1) - CHEVY
3	149587-13-T13	EA	SEAT - BUCKET/DRIVER (T13, TK2) - CHEVY
3	149587-15-T11	EA	SEAT - BUCKET/DRIVER - LEATHER (T11, T12, TK0, TK1) - CHEVY- LEATHER
3	149587-15-T13	EA	SEAT - BUCKET/DRIVER - LEATHER (T13, TK2) - CHEVY- LEATHER
4	149587-08-T11	EA	SEAT - BUCKET/PASSENGER (T11, TK0) - FORD
4	149587-02-T12	EA	SEAT - BUCKET/PASSENGER (T12, TK1) - FORD
4	149587-08-T13	EA	SEAT - BUCKET/PASSENGER (T13, TK2) - FORD
4	149587-04-S01	EA	SEAT - BUCKET/PASSENGER - LEATHER - MEDIUM FLINT - EARLY FORD LEATHER
4	149587-04-T11	EA	SEAT - BUCKET/PASSENGER - MEDIUM PEBBLE (T11, T12, TK0, TK1) - FORD - LEATHER
4	149587-04-T13	EA	SEAT - BUCKET/PASSENGER - LEATHER - MEDIUM PEBBLE (T13, TK2) - FORD - LEATHER
4	149587-14-T11	EA	SEAT - BUCKET/PASSENGER (T11, TK0) - CHEVY
4	149587-12-T12	EA	SEAT - BUCKET/PASSENGER (T12, TK1) - CHEVY
4	149587-14-T13	EA	SEAT - BUCKET/PASSENGER (T13, TK2) - CHEVY
4	149587-16-T11	EA	SEAT - BUCKET/PASSENGER - LEATHER (T11, T12, TK0, TK1) - CHEVY- LEATHER
4	149587-16-T13	EA	SEAT - BUCKET/PASSENGER - LEATHER (T13, TK2) - CHEVY- LEATHER
5	138523-02-T11	EA	CHAIR - W/SPRUNG SEAT (T11, TK0)
5	138523-02-T12	EA	CHAIR - W/SPRUNG SEAT (T12, TK1)
5	138523-02-S03	EA	CHAIR - W/SPRUNG SEAT (T13, TK2)
6	105573-18-T11	EA	CUSHION - OVERHEAD BUNK/FRONT - 32.5" X 80" X 5" (T11, TK0)
6	105573-18-T12	EA	CUSHION - OVERHEAD BUNK/FRONT - 32.5" X 80" X 5" (T12, TK1)
6	105573-18-S03	EA	CUSHION - OVERHEAD BUNK/FRONT - 32.5" X 80" X 5" (T13, TK2)
	P05573-18-T11	EA	COVER - CUSHION/OVERHEAD/FRT BUNK -32.5"X80"X5"-DBL ANGLED (T11, TK0)
	P05573-18-T12	EA	COVER - CUSHION/OVERHEAD/FRT BUNK -32.5"X80"X5"-DBL ANGLED (T12, TK1)
	P05573-18-S03	EA	COVER - CUSHION/OVERHEAD/FRT BUNK -32.5"X80"X5"-DBL ANGLED (T13, TK2)

COPYRIGHT © 2006 WINNEBAGO INDUSTRIES INC.

CURTAIN & CUSHION GROUP (CONTINUED)

CUSHION LAYOUT (CONTINUED)

KEY	PART NUMBER	U/M	DESCRIPTION
7	105573-21-T11	EA	CUSHION - OVERHEAD BUNK/REAR - 27" X 23" X 80" X 5" (T11, TK0)
7	105573-21-T12	EA	CUSHION - OVERHEAD BUNK/REAR - 27" X 23" X 80" X 5" (T12, TK1)
7	105573-21-S03	EA	CUSHION - OVERHEAD BUNK/REAR - 27" X 23" X 80" X 5" (T13, TK2)
	P05573-21-T11	EA	COVER - CUSHION/OVERHEAD BUNK/REAR - 27" X 23" X 80" X 5" (T11, TK0)
	P05573-21-T12	EA	COVER - CUSHION/OVERHEAD BUNK/REAR - 27" X 23" X 80" X 5" (T12, TK1)
	P05573-21-S03	EA	COVER - CUSHION/OVERHEAD BUNK/REAR - 27" X 23" X 80" X 5" (T13, TK2)
8	153519-01-T11	EA	PAD - TOP/RH - F/DINETTE BACK - W/TAB - FABRIC COVERED (T11, TK0)
8	153519-01-T12	EA	PAD - TOP/RH - F/DINETTE BACK - W/TAB - FABRIC COVERED (T12, TK1)
8	153519-01-T13	EA	PAD - TOP/RH - F/DINETTE BACK - W/TAB - FABRIC COVERED (T13, TK2)
9	153519-02-T11	EA	PAD - TOP/LH - F/DINETTE BACK - W/TAB - FABRIC COVERED (T11, TK0)
9	153519-02-T12	EA	PAD - TOP/LH - F/DINETTE BACK - W/TAB - FABRIC COVERED (T12, TK1)
9	153519-02-T13	EA	PAD - TOP/LH - F/DINETTE BACK - W/TAB - FABRIC COVERED (T13, TK2)
10	153670-10-T11	EA	CUSHION - SEAT BACK - 17.5" X 42" X 5" (T11, TK0)
10	153670-10-T12	EA	CUSHION - SEAT BACK - 17.5" X 42" X 5" (T12, TK1)
10	153670-10-T13	EA	CUSHION - SEAT BACK - 17.5" X 42" X 5" (T13, TK2)
10	153670-11-T11	EA	CUSHION - SEAT BACK - 17.5" X 42" X 5" - W/INSERT (T11, TK0) - DELUXE FEATURE PKG
10	153670-11-T12	EA	CUSHION - SEAT BACK - 17.5" X 42" X 5" - W/INSERT (T12, TK1) - DELUXE FEATURE PKG
10	153670-11-T13	EA	CUSHION - SEAT BACK - 17.5" X 42" X 5" - W/INSERT (T13, TK2) - DELUXE FEATURE PKG
	P53670-10-T11	EA	COVER/BACK - 17.5" X 42" X 5" (T11, TK0)
	P53670-10-T12	EA	COVER/BACK - 17.5" X 42" X 5" (T12, TK1)
	P53670-10-T13	EA	COVER/BACK - 17.5" X 42" X 5" (T13, TK2)
	P53670-11-T11	EA	COVER/BACK - 17.5" X 42" X 5" - W/INSERT (T11, TK0) - DELUXE FEATURE PKG
	P53670-11-T12	EA	COVER/BACK - 17.5" X 42" X 5" - W/INSERT (T12, TK1) - DELUXE FEATURE PKG
	P53670-11-T13	EA	COVER/BACK - 17.5" X 42" X 5" - W/INSERT (T13, TK2) - DELUXE FEATURE PKG
11	153671-02-T11	EA	CUSHION - SEAT - 23" X 42" X 5" (T11, TK0)
11	153671-02-T12	EA	CUSHION - SEAT - 23" X 42" X 5" (T12, TK1)
11	153671-02-T13	EA	CUSHION - SEAT - 23" X 42" X 5" (T13, TK2)
	P53671-02-T11	EA	COVER/SEAT - 23" X 42" X 5" (T11, TK0)
	P53671-02-T12	EA	COVER/SEAT - 23" X 42" X 5" (T12, TK1)
	P53671-02-T13	EA	COVER/SEAT - 23" X 42" X 5" (T13, TK2)
12	150855-01-S01	EA	CUSHION - BACK/TOP - LEFT - DINETTE (T11, TK0)
12	150855-01-T12	EA	CUSHION - BACK/TOP - LEFT - DINETTE (T12, TK1)
12	150855-01-S03	EA	CUSHION - BACK/TOP - LEFT - DINETTE (T13, TK2)
	P50855-01-S01	EA	COVER/CUSHION - BACK/TOP - LEFT - DINETTE (T11, TK0)
	P50855-01-T12	EA	COVER/CUSHION - BACK/TOP - LEFT - DINETTE (T12, TK1)
	P50855-01-S03	EA	COVER/CUSHION - BACK/TOP - LEFT - DINETTE (T13, TK2)
13	150855-03-S01	EA	CUSHION - BACK/CORNER TOP - LEFT - DINETTE (T11, TK0)
13	150855-03-T12	EA	CUSHION - BACK/CORNER TOP - LEFT - DINETTE (T12, TK1)
13	150855-03-S03	EA	CUSHION - BACK/CORNER TOP - LEFT - DINETTE (T13, TK2)
	P50855-03-S01	EA	COVER/CUSHION - BACK/CORNER TOP - LEFT - DINETTE (T11, TK0)
	P50855-03-T12	EA	COVER/CUSHION - BACK/CORNER TOP - LEFT - DINETTE (T12, TK1)
	P50855-03-S03	EA	COVER/CUSHION - BACK/CORNER TOP - LEFT - DINETTE (T13, TK2)
14	150855-05-S01	EA	CUSHION - BACK/CENTER TOP - DINETTE (T11, TK0)
14	150855-05-T12	EA	CUSHION - BACK/CENTER TOP - DINETTE (T12, TK1)
14	150855-05-S03	EA	CUSHION - BACK/CENTER TOP - DINETTE (T13, TK2)
	P50855-05-S01	EA	COVER/CUSHION - BACK/CENTER TOP - DINETTE (T11, TK0)
	P50855-05-T12	EA	COVER/CUSHION - BACK/CENTER TOP - DINETTE (T12, TK1)
	P50855-05-S03	EA	COVER/CUSHION - BACK/CENTER TOP - DINETTE (T13, TK2)
15	150855-07-S01	EA	CUSHION - BACK/CORNER TOP - RIGHT - DINETTE (T11, TK0)
15	150855-07-T12	EA	CUSHION - BACK/CORNER TOP - RIGHT - DINETTE (T12, TK1)
15	150855-07-S03	EA	CUSHION - BACK/CORNER TOP - RIGHT - DINETTE (T13, TK2)
	P50855-07-S01	EA	COVER/CUSHION - BACK/CORNER TOP - RIGHT - DINETTE (T11, TK0)
	P50855-07-T12	EA	COVER/CUSHION - BACK/CORNER TOP - RIGHT - DINETTE (T12, TK1)
	P50855-07-S03	EA	COVER/CUSHION - BACK/CORNER TOP - RIGHT - DINETTE (T13, TK2)
16	150855-08-S01	EA	CUSHION - BACK/TOP - RIGHT - DINETTE (T11, TK0)
16	150855-08-T12	EA	CUSHION - BACK/TOP - RIGHT - DINETTE (T12, TK1)
16	150855-08-S03	EA	CUSHION - BACK/TOP - RIGHT - DINETTE (T13, TK2)
	P50855-08-S01	EA	COVER/CUSHION - BACK/TOP - RIGHT - DINETTE (T11, TK0)
	P50855-08-T12	EA	COVER/CUSHION - BACK/TOP - RIGHT - DINETTE (T12, TK1)
	P50855-08-S03	EA	COVER/CUSHION - BACK/TOP - RIGHT - DINETTE (T13, TK2)

COPYRIGHT © 2006 WINNEBAGO INDUSTRIES INC.

CURTAIN & CUSHION GROUP (CONTINUED)

CUSHION LAYOUT (CONTINUED)

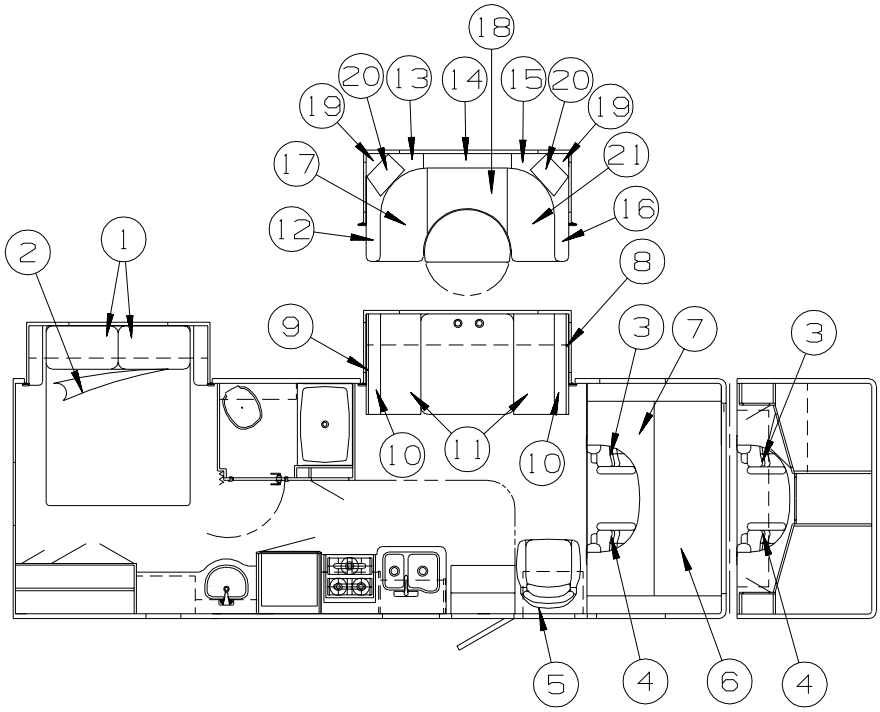

KEY	PART NUMBER	U/M	DESCRIPTION
17	150855-09-S01	EA	CUSHION - SEAT/LEFT - DINETTE (T11, TK0)
17	150855-09-T12	EA	CUSHION - SEAT/LEFT - DINETTE (T12, TK1)
17	150855-09-S03	EA	CUSHION - SEAT/LEFT - DINETTE (T13, TK2)
	P50855-09-S01	EA	COVER/CUSHION - SEAT/LEFT - DINETTE (T11, TK0)
	P50855-09-T12	EA	COVER/CUSHION - SEAT/LEFT - DINETTE (T12, TK1)
	P50855-09-S03	EA	COVER/CUSHION - SEAT/LEFT - DINETTE (T13, TK2)
18	150855-10-S01	EA	CUSHION - SEAT/CENTER - DINETTE (T11, TK0)
18	150855-10-T12	EA	CUSHION - SEAT/CENTER - DINETTE (T12, TK1)
18	150855-10-S03	EA	CUSHION - SEAT/CENTER - DINETTE (T13, TK2)
	P50855-10-S01	EA	COVER/CUSHION - SEAT/CENTER - DINETTE (T11, TK0)
	P50855-10-T12	EA	COVER/CUSHION - SEAT/CENTER - DINETTE (T12, TK1)
	P50855-10-S03	EA	COVER/CUSHION - SEAT/CENTER - DINETTE (T13, TK2)
19	150855-11-T11	EA	CUSHION - CORNER BLOCK - LEFT/RIGHT - DINETTE (T11, TK0)
19	150855-11-T12	EA	CUSHION - CORNER BLOCK - LEFT/RIGHT - DINETTE (T12, TK1)
19	150855-11-S03	EA	CUSHION - CORNER BLOCK - LEFT/RIGHT - DINETTE (T13, TK2)
	P50855-11-T12	EA	COVER/CUSHION - CORNER BLOCK - LEFT/RIGHT - DINETTE (T12, TK1)
	P50855-11-T12	EA	COVER/CUSHION - CORNER BLOCK - LEFT/RIGHT - DINETTE (T12, TK1)
	P50855-11-S03	EA	COVER/CUSHION - CORNER BLOCK - LEFT/RIGHT - DINETTE (T13, TK2)
20	150855-12-T11	EA	CUSHION - FILLER - DINETTE (T11, TK0)
20	150855-12-T12	EA	CUSHION - FILLER - DINETTE (T12, TK1)
20	150855-12-S03	EA	CUSHION - FILLER - DINETTE (T13, TK2)
	P50855-12-T11	EA	COVER/CUSHION - FILLER - DINETTE (T11, TK0)
	P50855-12-T12	EA	COVER/CUSHION - FILLER - DINETTE (T12, TK1)
	P50855-12-S03	EA	COVER/CUSHION - FILLER - DINETTE (T13, TK2)
21	150855-13-S01	EA	CUSHION - SEAT/RIGHT - DINETTE (T11, TK0)
21	150855-13-T12	EA	CUSHION - SEAT/RIGHT - DINETTE (T12, TK1)
21	150855-13-S03	EA	CUSHION - SEAT/RIGHT - DINETTE (T13, TK2)
	P50855-13-S01	EA	COVER/CUSHION - SEAT/RIGHT - DINETTE (T11, TK0)
	P50855-13-T12	EA	COVER/CUSHION - SEAT/RIGHT - DINETTE (T12, TK1)
	P50855-13-S03	EA	COVER/CUSHION - SEAT/RIGHT - DINETTE (T13, TK2)

COPYRIGHT © 2006 WINNEBAGO INDUSTRIES INC.

CURTAIN & CUSHION GROUP (CONTINUED)

BUCKET SEATS

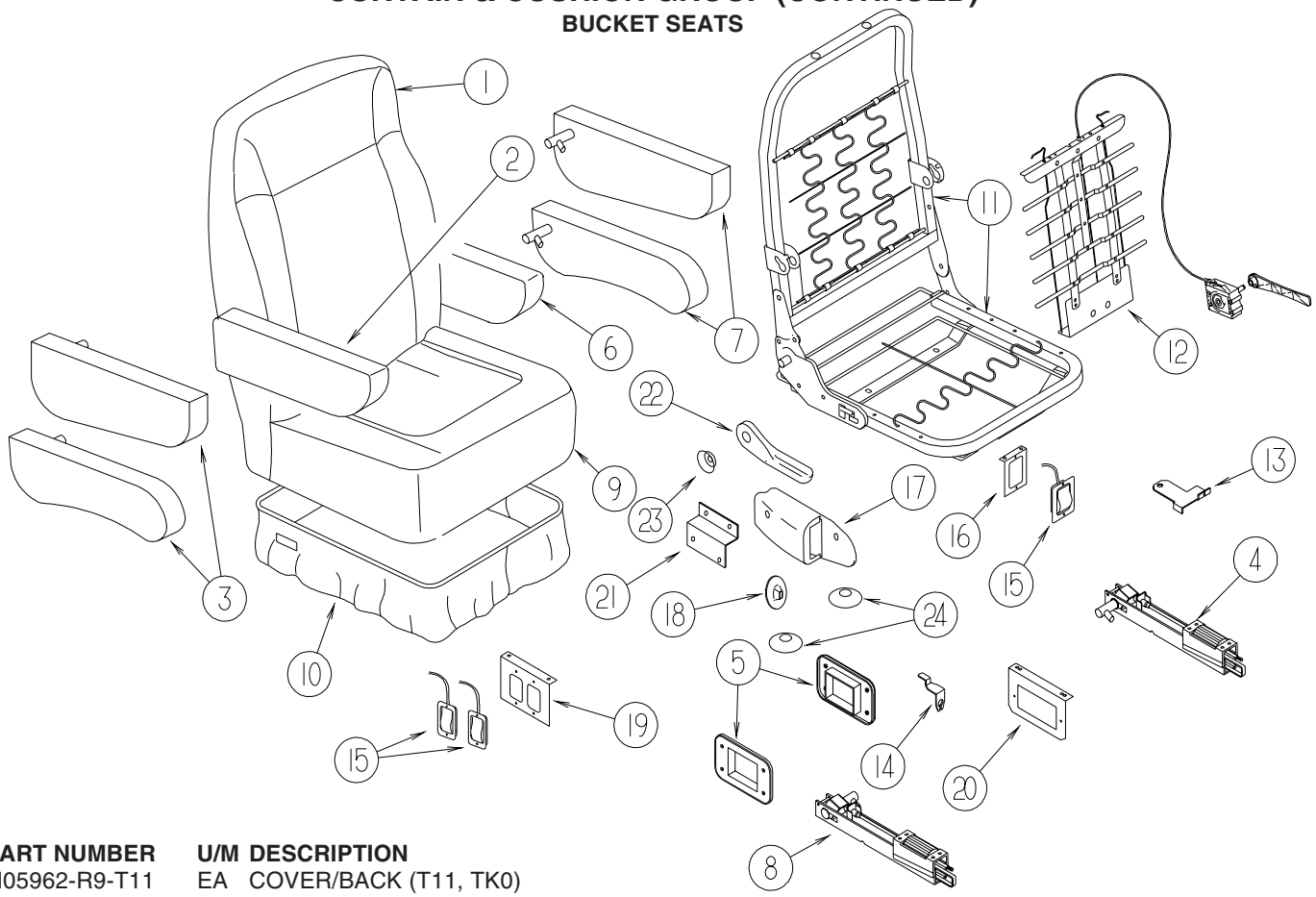

KEY	PART NUMBER	U/M	DESCRIPTION
1	M05962-R9-T11	EA	COVER/BACK (T11, TK0)
1	M05962-L3-T12	EA	COVER/BACK (T12, TK1)
1	M05962-R9-T13	EA	COVER/BACK (T13, TK2)
1	M05962-L5-S01	EA	COVER/BACK - MEDIUM FLINT - EARLY FORD - LEATHER
1	M05962-L5-T11	EA	COVER/BACK - MEDIUM PEBBLE (T11, T12, TK0, TK1) - LEATHER
1	M05962-L5-T13	EA	COVER/BACK - MEDIUM PEBBLE (T13, TK2) - LEATHER
2	129666-07-T11	EA	ARMREST - RIGHT HAND (T11, TK0)
2	129666-07-T12	EA	ARMREST - RIGHT HAND (T12, TK1)
2	129666-07-S03	EA	ARMREST - RIGHT HAND (T13, TK2)
2	129666-09-P13	EA	ARMREST - RIGHT HAND - MEDIUM FLINT - EARLY FORD - LEATHER
2	129666-09-T23	EA	ARMREST - RIGHT HAND - MEDIUM PEBBLE (T11, T12, TK0, TK1) - LEATHER
2	129666-09-T13	EA	ARMREST - RIGHT HAND - MEDIUM PEBBLE (T13, TK2) - LEATHER
	P29666-07-T11	EA	COVER/ARMREST - RIGHT HAND (T11, TK0)
	P29666-07-T12	EA	COVER/ARMREST - RIGHT HAND (T12, TK1)
	P29666-07-S03	EA	COVER/ARMREST - RIGHT HAND (T13, TK2)
	P29666-09-P13	EA	COVER/ARMREST - RIGHT HAND - MEDIUM FLINT - EARLY FORD - LEATHER
	P29666-09-T23	EA	COVER/ARMREST - RIGHT HAND - MEDIUM PEBBLE (T11, T12, TK0, TK1) - LEATHER
	P29666-09-T13	EA	COVER/ARMREST - RIGHT HAND - MEDIUM PEBBLE (T13, TK2) - LEATHER
3	130698-01-000	EA	ARMREST/MOLDED - RIGHT - W/O COVER
4	NOT USED		
5	NOT USED		
6	129666-08-T11	EA	ARMREST - LEFT HAND (T11, TK0)
6	129666-08-T12	EA	ARMREST - LEFT HAND (T12, TK1)
6	129666-08-S03	EA	ARMREST - LEFT HAND (T13, TK2)
6	129666-10-P13	EA	ARMREST - LEFT HAND - MEDIUM FLINT - EARLY FORD - LEATHER
6	129666-10-T23	EA	ARMREST - LEFT HAND - MEDIUM PEBBLE (T11, T12, TK0, TK1) - LEATHER
6	129666-10-T13	EA	ARMREST - LEFT HAND - MEDIUM PEBBLE (T13, TK2) - LEATHER
	P29666-08-T11	EA	COVER/ARMREST - LEFT HAND (T11, TK0)
	P29666-08-T12	EA	COVER/ARMREST - LEFT HAND (T12, TK1)
	P29666-08-S03	EA	COVER/ARMREST - LEFT HAND (T13, TK2)
	P29666-10-P13	EA	COVER/ARMREST - LEFT HAND - MEDIUM FLINT - EARLY FORD - LEATHER
	P29666-10-T23	EA	COVER/ARMREST - LEFT HAND - MEDIUM PEBBLE (T11, T12, TK0, TK1) - LEATHER
	P29666-10-T13	EA	COVER/ARMREST - LEFT HAND - MEDIUM PEBBLE (T13, TK2) - LEATHER
7	130698-02-000	EA	ARMREST/MOLDED - LEFT - W/O COVER
8	NOT USED		

COPYRIGHT © 2006 WINNEBAGO INDUSTRIES INC.

CURTAIN & CUSHION GROUP (CONTINUED)

BUCKET SEATS (CONTINUED)

KEY	PART NUMBER	U/M	DESCRIPTION
9	M05962-R8-T11	EA	COVER/SEAT - DRIVER (T11, TK0)
9	M05962-P0-T12	EA	COVER/SEAT - DRIVER (T12, TK1)
9	M05962-R8-T13	EA	COVER/SEAT - DRIVER (T13, TK2)
9	M05962-P2-S01	EA	COVER/SEAT - DRIVER - MEDIUM FLINT - EARLY FORD - LEATHER
9	M05962-P2-T11	EA	COVER/SEAT - DRIVER - MEDIUM PEBBLE (T11, T12, TK0, TK1) - LEATHER
9	M05962-P2-T13	EA	COVER/SEAT - DRIVER - MEDIUM PEBBLE (T13, TK2) - LEATHER
9	M05962-R7-T11	EA	COVER/SEAT - PASSENGER (T11, TK0)
9	M05962-N9-T12	EA	COVER/SEAT - PASSENGER (T12, TK1)
9	M05962-R7-T13	EA	COVER/SEAT - PASSENGER (T13, TK2)
9	M05962-P1-S01	EA	COVER/SEAT - PASSENGER - MEDIUM FLINT - EARLY FORD - LEATHER
9	M05962-P1-T11	EA	COVER/SEAT - PASSENGER - MEDIUM PEBBLE (T11, T12, TK0, TK1) - LEATHER
9	M05962-P1-T13	EA	COVER/SEAT - PASSENGER - MEDIUM PEBBLE (T13, TK2) - LEATHER
10	NOT USED		
11	132875-04-000	EA	FRAME - LEFT HAND CHAIR/TAPERED BACK
11	156605-01-000	EA	FRAME - LEFT HAND CHAIR/TAPERED BACK - CHEVY
11	132875-03-000	EA	FRAME - RIGHT HAND CHAIR/TAPERED BACK
11	156605-02-000	EA	FRAME - RIGHT HAND CHAIR/TAPERED BACK - CHEVY
12	NOT USED		
13	NOT USED		
14	NOT USED		
15	NOT USED		
16	NOT USED		
17	NOT USED		
18	NOT USED		
19	NOT USED		
20	NOT USED		
21	147457-01-02B	EA	BRACKET - ZEE W/HOLES - 2.8" - E-COATED
22	130802-02-000	EA	LEVER - RIGHT HAND
	130802-01-000	EA	LEVER - LEFT HAND
	130802-03-000	EA	SCREW F/LEVER
23	NOT USED		
24	007221-01-000	EA	SPACER - SEAT/ADJUSTER
	029134-01-000	EA	CLIP - FINISH - UPHOLSTERY

COPYRIGHT © 2006 WINNEBAGO INDUSTRIES INC.

CURTAIN & CUSHION GROUP (CONTINUED)

LOUNGE CHAIR

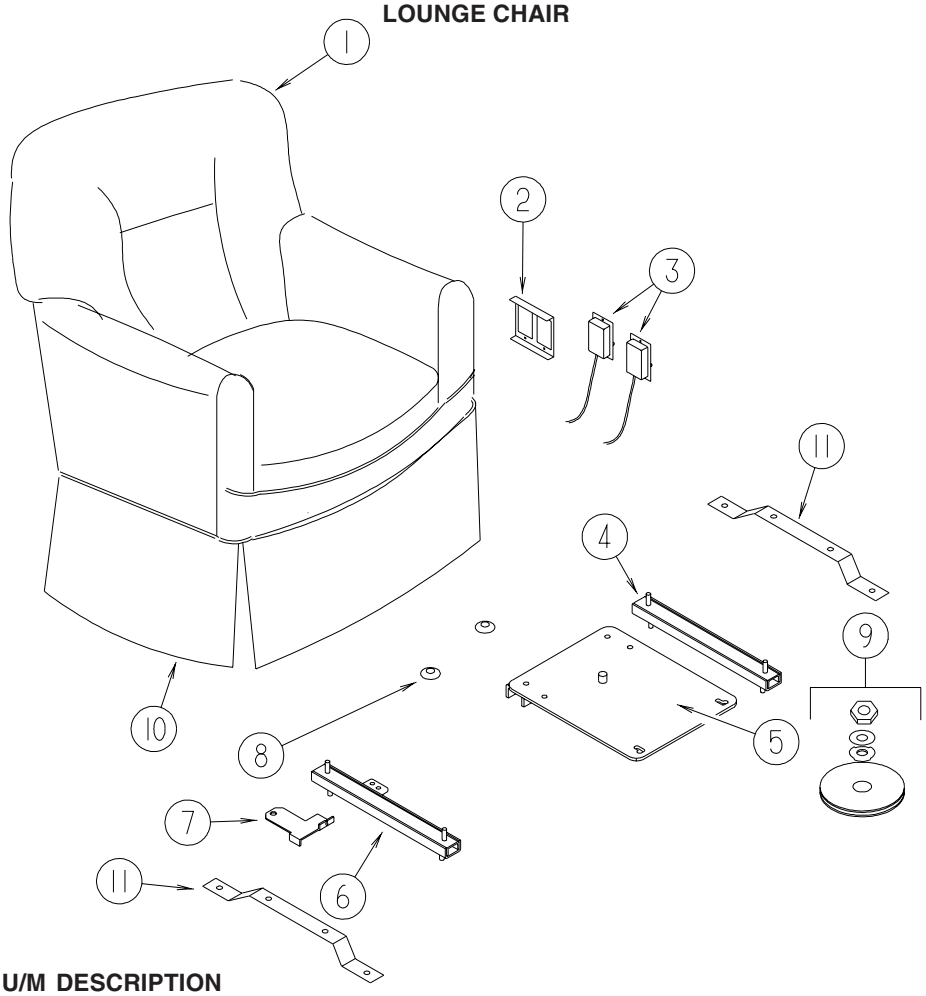

KEY	PART NUMBER	U/M	DESCRIPTION
1	P38523-01-T11	EA	COVER - CHAIR/GLIDER (T11, TK0)
1	P38523-01-T12	EA	COVER - CHAIR/GLIDER (T12, TK1)
1	P38523-01-S03	EA	COVER - CHAIR/GLIDER (T13, TK2)
2	127159-02-02B	EA	BRACKET - SEAT RELEASE - DUAL REMOTE - E-COATED
3	108049-02-000	EA	CLIP - CABLE/PEDESTAL
	108049-04-000	EA	CABLE - W/MINI LEVER ACTION SWITCH - 28" SHEATH/30" CABLE
4	131566-04-000	EA	SLIDE/SEAT - HEAVY DUTY LOCKING - 5”
5	133408-07-000	EA	TOP PLATE - W/O BAR
6	131566-04-000	EA	SLIDE/SEAT - HEAVY DUTY LOCKING - 5”
7	117125-01-02B	EA	BRACKET - CABLE MOUNT - ADJUSTER W/LOCK
	119952-07-000	EA	WIRE - LATCH RELEASE/ROTARY
8	NOT USED		
9	107921-06-000	EA	BEARING KIT - PEDESTAL
10	139083-01-T11	EA	SKIRT - F/GLIDER CHAIR (T11, TK0)
10	139083-01-T12	EA	SKIRT - F/GLIDER CHAIR (T12, TK1)
10	139083-01-T13	EA	SKIRT - F/GLIDER CHAIR (T13, TK2)
11	139208-02-000	EA	SUPPORT BAR - SHORT - W/PEDESTAL

COPYRIGHT © 2006 WINNEBAGO INDUSTRIES INC.

CURTAIN & CUSHION GROUP (CONTINUED)

WINDOW TREATMENT

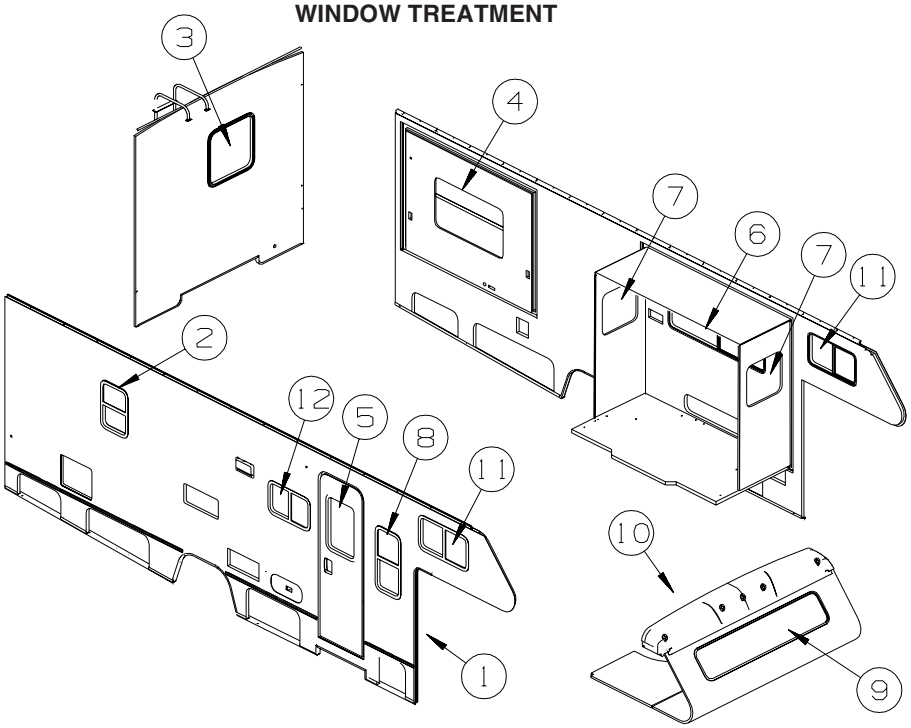

KEY	PART NUMBER	U/M	DESCRIPTION
1	076892-30-S96	EA	CURTAIN - CAB PRIVACY - 47.5" X 74" (T11, TK0)
1	076892-30-T12	EA	CURTAIN - CAB PRIVACY - 47.5" X 74" (T12, TK1)
1	076892-30-T13	EA	CURTAIN - CAB PRIVACY - 47.5" X 74" (T13, TK2)
1	076892-29-SX0	EA	CURTAIN - CAB PRIVACY - 47.5" X 74" (T11, TK0) - 24" COLOR STEREO TV
1	076892-29-T12	EA	CURTAIN - CAB PRIVACY - 47.5" X 74" (T12, TK1) - 24" COLOR STEREO TV
1	076892-29-T13	EA	CURTAIN - CAB PRIVACY - 47.5" X 74" (T13, TK2) - 24" COLOR STEREO TV
2	138097-29-T11	EA	VALANCE - CUFFED - 46" (T11, TK0)
2	138097-29-T12	EA	VALANCE - CUFFED - 46" (T12, TK1)
2	138097-29-T13	EA	VALANCE - CUFFED - 46" (T13, TK2)
2	152664-29-SX0	EA	LEG - RIGHT - 26" (T11, TK0)
2	152664-29-T12	EA	LEG - RIGHT - 26" (T12, TK1)
2	152664-29-T13	EA	LEG - RIGHT - 26" (T13, TK2)
2	152664-30-SX0	EA	LEG - LEFT - 26" (T11, TK0)
2	152664-30-T12	EA	LEG - LEFT - 26" (T12, TK1)
2	152664-30-T13	EA	LEG - LEFT - 26" (T13, TK2)
2	140789-02-N02	EA	BLIND - DAY/NIGHTER - 43" X 28" (T11, TK0, T13, TK2)
2	140789-02-T54	EA	BLIND - DAY/NIGHTER - 43" X 28" (T12, TK1)
3	138097-30-T11	EA	VALANCE - CUFFED - 32" (T11, TK0)
3	138097-30-T12	EA	VALANCE - CUFFED - 32" (T12, TK1)
3	138097-30-T13	EA	VALANCE - CUFFED - 32" (T13, TK2)
5	152664-27-T11	EA	LEG - RIGHT - 29" (T11, TK0)
5	152664-27-T12	EA	LEG - RIGHT - 29" (T12, TK1)
5	152664-27-T13	EA	LEG - RIGHT - 29" (T13, TK2)
5	152664-28-T11	EA	LEG - LEFT - 29" (T11, TK0)
5	152664-28-T12	EA	LEG - LEFT - 29" (T12, TK1)
5	152664-28-T13	EA	LEG - LEFT - 29" (T13, TK2)
3	140789-06-N30	EA	BLIND - DAY/NIGHTER - 28" X 28" (T11, TK0, T13, TK2)
3	140789-06-T54	EA	BLIND - DAY/NIGHTER - 28" X 28" (T12, TK1)
4	138097-31-T11	EA	VALANCE - CUFFED - 20" (T11, TK0)
4	138097-31-T12	EA	VALANCE - CUFFED - 20" (T12, TK1)
4	138097-31-T13	EA	VALANCE - CUFFED - 20" (T13, TK2)
4	152664-31-T11	EA	LEG - RIGHT - 24" (T11, TK0)
4	152664-31-T12	EA	LEG - RIGHT - 24" (T12, TK1)
4	152664-31-T13	EA	LEG - RIGHT - 24" (T13, TK2)
4	152664-32-T11	EA	LEG - LEFT - 24" (T11, TK0)
4	152664-32-T12	EA	LEG - LEFT - 24" (T12, TK1)
4	152664-32-T13	EA	LEG - LEFT - 24" (T13, TK2)
4	140789-63-S01	EA	BLIND - DAY/NIGHTER - 16.5" X 26" (T11, TK0, T13, TK2)
4	140789-63-SR6	EA	BLIND - DAY/NIGHTER - 16.5" X 26" (T12, TK1)

COPYRIGHT © 2006 WINNEBAGO INDUSTRIES INC.

CURTAIN & CUSHION GROUP (CONTINUED)

WINDOW TREATMENT (CONTINUED)

KEY	PART NUMBER	U/M	DESCRIPTION
5	153643-30-T11	EA	VALANCE - MODERATE - 12" X 32" (T11, TK0)
5	153643-30-T12	EA	VALANCE - MODERATE - 12" X 32" (T12, TK1)
5	153643-30-T13	EA	VALANCE - MODERATE - 12" X 32" (T13, TK2)
5	084755-57-R59	EA	SHADE - PULL - 27.25"
6	138097-33-T11	EA	VALANCE - CUFFED - 63" (T11, TK0)
6	138097-33-T12	EA	VALANCE - CUFFED - 63" (T12, TK1)
6	138097-33-T13	EA	VALANCE - CUFFED - 63" (T13, TK2)
6	152664-17-T11	EA	LEG - RIGHT - 24" (T11, TK0)
6	152664-17-S03	EA	LEG - RIGHT - 24" (T13, TK2)
6	152664-17-T12	EA	LEG - RIGHT - 24" (T12, TK1)
6	152664-13-T11	EA	LEG - RIGHT - 26" (T11, TK0) - U-SHAPED DINETTE
6	152664-13-T12	EA	LEG - RIGHT - 26" (T12, TK1) - U-SHAPED DINETTE
6	152664-13-S03	EA	LEG - RIGHT - 26" (T13, TK2) - U-SHAPED DINETTE
6	152664-18-T11	EA	LEG - LEFT - 24" (T11, TK0)
6	152664-18-T12	EA	LEG - LEFT - 24" (T12, TK1)
6	152664-18-S03	EA	LEG - LEFT - 24" (T13, TK2)
6	152664-14-T11	EA	LEG - LEFT - 26" (T11, TK0) - U-SHAPED DINETTE
6	152664-14-T12	EA	LEG - LEFT - 26" (T12, TK1) - U-SHAPED DINETTE
6	152664-14-S03	EA	LEG - LEFT - 26" (T13, TK2) - U-SHAPED DINETTE
6	140789-08-N02	EA	BLIND - DAY/NIGHTER - 59" X 26.5" (T11, TK0, T13, TK2)
6	140789-08-T54	EA	BLIND - DAY/NIGHTER - 59" X 26.5" (T12, TK1)
7	138097-34-T11	EA	VALANCE - CUFFED - 26" (T11, TK0)
7	138097-34-T12	EA	VALANCE - CUFFED - 26" (T12, TK1)
7	138097-34-T13	EA	VALANCE - CUFFED - 26" (T13, TK2)
7	152664-15-T11	EA	LEG - RIGHT - 18" (T11, TK0)
7	152664-15-T12	EA	LEG - RIGHT - 18" (T12, TK1)
7	152664-15-S03	EA	LEG - RIGHT - 18" (T13, TK2)
7	152664-11-T11	EA	LEG - RIGHT - 21.5" (T11, TK0) - U-SHAPED DINETTE
7	152664-11-T12	EA	LEG - RIGHT - 21.5" (T12, TK1) - U-SHAPED DINETTE
7	152664-11-S03	EA	LEG - RIGHT - 21.5" (T13, TK2) - U-SHAPED DINETTE
7	152664-16-T11	EA	LEG - LEFT - 18" (T11, TK0)
7	152664-16-T12	EA	LEG - LEFT - 18" (T12, TK1)
7	152664-16-S03	EA	LEG - LEFT - 18" (T13, TK2)
7	152664-12-T11	EA	LEG - LEFT - 21.5" (T11, TK0) - U-SHAPED DINETTE
7	152664-12-T12	EA	LEG - LEFT - 21.5" (T12, TK1) - U-SHAPED DINETTE
7	152664-12-S03	EA	LEG - LEFT - 21.5" (T13, TK2) - U-SHAPED DINETTE
7	140789-62-S01	EA	BLIND - DAY/NIGHTER - 22.5" X 19" (T11, TK0, T13, TK2)
7	140789-62-SR6	EA	BLIND - DAY/NIGHTER - 22.5" X 19" (T12, TK1)
7	140789-07-N02	EA	BLIND - DAY/NIGHTER - 22.5" X 23" (T11, TK0, T13, TK2) - U-SHAPED DINETTE
7	140789-07-T54	EA	BLIND - DAY/NIGHTER - 22.5" X 23" (T12, TK1) - U-SHAPED DINETTE
8	138097-36-T11	EA	VALANCE - CUFFED - 20" (T11, TK0)
8	138097-36-T12	EA	VALANCE - CUFFED - 20" (T12, TK1)
8	138097-36-T13	EA	VALANCE - CUFFED - 20" (T13, TK2)
8	152664-19-T11	EA	LEG - RIGHT - 32" (T11, TK0)
8	152664-19-T12	EA	LEG - RIGHT - 32" (T12, TK1)
8	152664-19-S03	EA	LEG - RIGHT - 32" (T13, TK2)
8	152664-20-T11	EA	LEG - LEFT - 32" (T11, TK0)
8	152664-20-T12	EA	LEG - LEFT - 32" (T12, TK1)
8	152664-20-S03	EA	LEG - LEFT - 32" (T13, TK2)
8	140789-23-N02	EA	BLIND - DAY/NIGHTER - 15.5" X 33" (T11, TK0, T13, TK2)
8	140789-23-T54	EA	BLIND - DAY/NIGHTER - 15.5" X 33" (T12, TK1)
9	150530-26-T11	EA	VALANCE - ABBOTT - 79" (T11, TK0) - DELUXE FEATURE PKG
9	150530-26-T12	EA	VALANCE - ABBOTT - 79" (T12, TK1) - DELUXE FEATURE PKG
9	150530-26-T13	EA	VALANCE - ABBOTT - 79" (T13, TK2) - DELUXE FEATURE PKG
9	101034-66-S96	EA	CURTAIN - PRIVACY/RIGHT HAND - 19" X 56" (T11, TK0)
9	101034-66-T12	EA	CURTAIN - PRIVACY/RIGHT HAND - 19" X 56" (T12, TK1)
9	101034-66-T13	EA	CURTAIN - PRIVACY/RIGHT HAND - 19" X 56" (T13, TK2)
9	101034-67-S96	EA	CURTAIN - PRIVACY/LEFT HAND - 19" X 56" (T11, TK0)
9	101034-67-T12	EA	CURTAIN - PRIVACY/LEFT HAND - 19" X 56" (T12, TK1)
9	101034-67-T13	EA	CURTAIN - PRIVACY/LEFT HAND - 19" X 56" (T13, TK2)

COPYRIGHT © 2006 WINNEBAGO INDUSTRIES INC.

CURTAIN & CUSHION GROUP (CONTINUED)

WINDOW TREATMENT (CONTINUED)

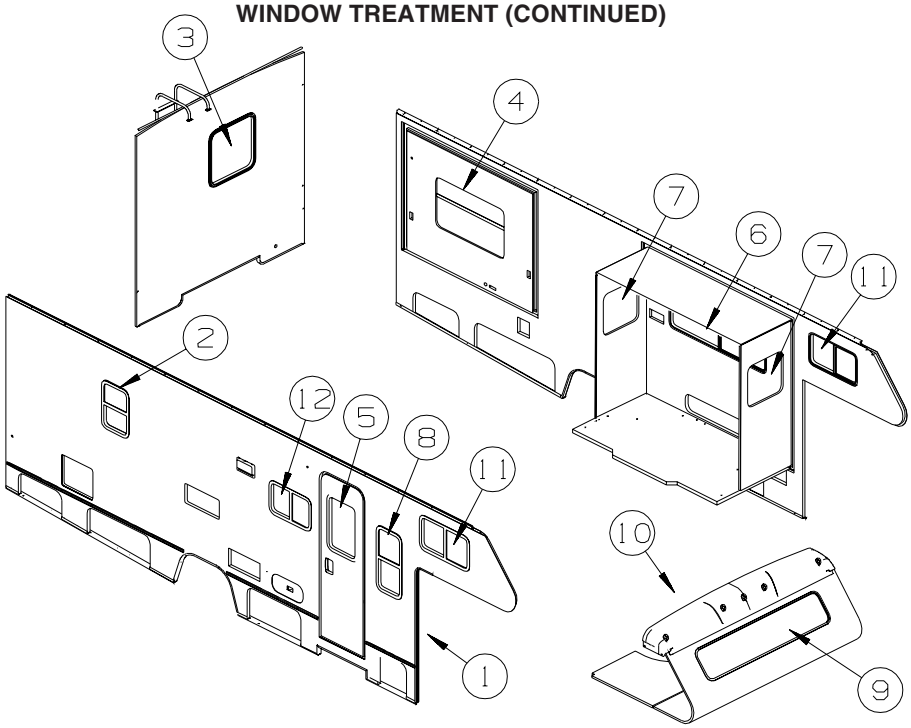

KEY	PART NUMBER	U/M	DESCRIPTION
10	101668-39-S96	EA	CURTAIN - PRIVACY/BUNK/RIGHT HAND - 35" X 50" (T11, TK0)
10	101668-39-T12	EA	CURTAIN - PRIVACY/BUNK/RIGHT HAND - 35" X 50" (T12, TK1)
10	101668-39-T13	EA	CURTAIN - PRIVACY/BUNK/RIGHT HAND - 35" X 50" (T13, TK2)
10	101668-40-S96	EA	CURTAIN - PRIVACY/BUNK/LEFT HAND - 35" X 50" (T11, TK0)
10	101668-40-T12	EA	CURTAIN - PRIVACY/BUNK/LEFT HAND - 35" X 50" (T12, TK1)
10	101668-40-T13	EA	CURTAIN - PRIVACY/BUNK/LEFT HAND - 35" X 50" (T13, TK2)
10	073260-23-S96	EA	TIEBACK - 3" X 18" (T11, TK0)
10	073260-23-T12	EA	TIEBACK - 3" X 18" (T12, TK1)
10	073260-23-T13	EA	TIEBACK - 3" X 18" (T13, TK2)
11	101034-63-S96	EA	CURTAIN - PRIVACY/RIGHT HAND - 19.5" X 31" (T11, TK0)
11	101034-63-T12	EA	CURTAIN - PRIVACY/RIGHT HAND - 19.5" X 31" (T12, TK1)
11	101034-63-T13	EA	CURTAIN - PRIVACY/RIGHT HAND - 19.5" X 31" (T13, TK2)
11	101034-64-S96	EA	CURTAIN - PRIVACY/LEFT HAND - 19.5" X 31" (T11, TK0)
11	101034-64-T12	EA	CURTAIN - PRIVACY/LEFT HAND - 19.5" X 31" (T12, TK1)
11	101034-64-T13	EA	CURTAIN - PRIVACY/LEFT HAND - 19.5" X 31" (T13, TK2)
12	109041-57-03A	EA	BLIND - MINI - 26" X 17"

COPYRIGHT © 2006 WINNEBAGO INDUSTRIES INC.

CURTAIN & CUSHION GROUP (CONTINUED)

HARDWARE

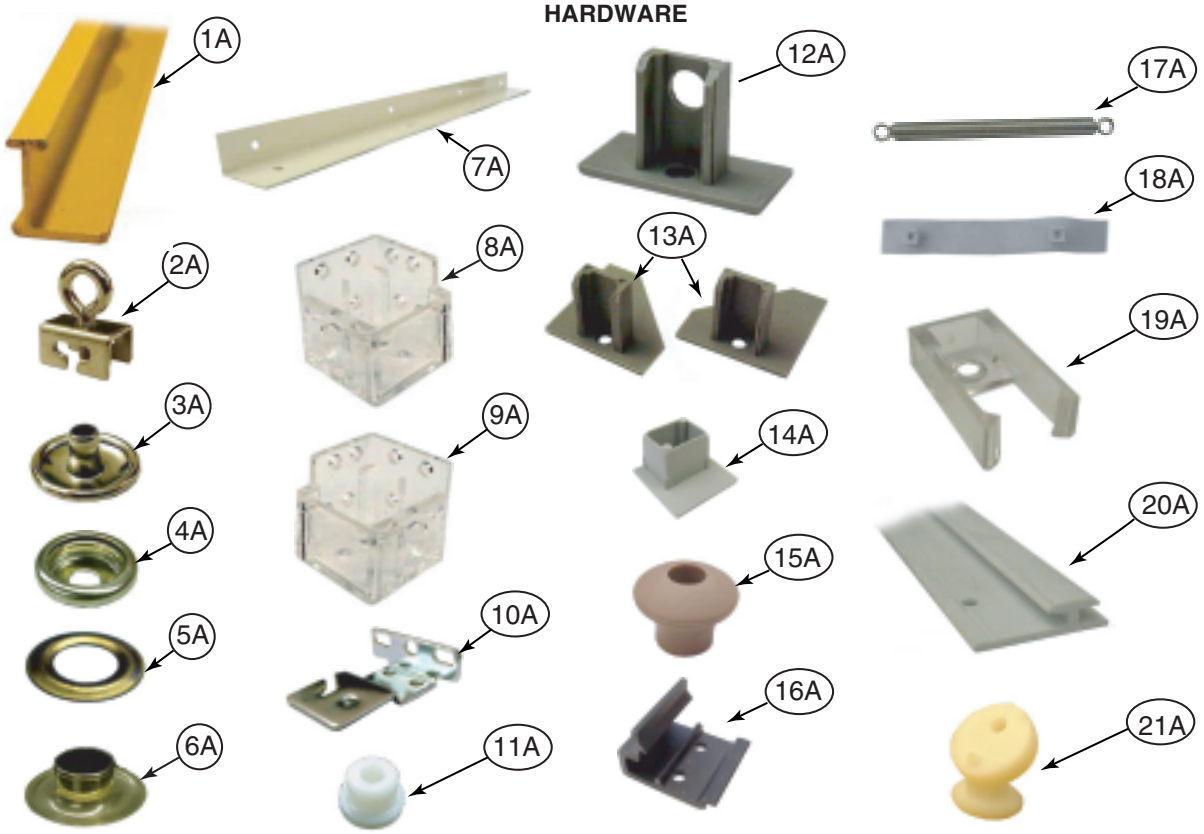

KEY	PART NUMBER	U/M	DESCRIPTION
1A	009700-04-002	EA	TRACK - CURTAIN - L-SHAPED - 15.5' - OFF WHITE - MINNIE WINNIE/SUNDANCER 400-SERIES
2A	009702-01-000	EA	END STOP - CURTAIN CARRIER - L ROD
3A	029155-01-000	EA	CAP - SNAP - 5/32" OUTSIDE DIAMETER OF PIN
4A	029156-01-000	EA	SOCKET - SNAP - 9/16" O.D.
5A	046867-02-000	EA	WASHER - HANDY BUTTON #3
6A	046867-03-000	EA	GROMMET - HANDY BUTTON #3
7A	075943-10-000	EA	BRACE - VALANCE - 20" - OFF WHITE
8A	083170-01-000	EA	BRACKET/BLIND - LEFT SIDE WHEN FACING WINDOW - CLEAR
9A	083170-02-000	EA	BRACKET/BLIND - RIGHT SIDE WHEN FACING WINDOW - CLEAR
10A	084434-01-000	EA	BRACKET - MOUNTING - ROLLER SHADE - 1 3/8"
11A	094896-02-000	EA	GROMMET - CORD/PLEATED BLIND - NYLON - GRAY
12A	094907-02-000	EA	END CAP - PLEATED BLIND/TOP - RH/LH - GRAY PLASTIC
13A	094907-04-000	EA	END CAP - PLEATED BLIND/BOTTOM - RH/LH
14A	094907-09-000	EA	END CAP/BLIND - CENTER RAIL - RH/LH
15A	097564-03-000	EA	HANDLE - KNOB - E-Z LIFT SHADE - TAN
	097593-02-000	FT	CORD - BLIND - PLEATED - GRAY
	097593-10-000	FT	CORD - BLIND - PLEATED - VANILLA
16A	097565-01-000	EA	BRACKET - MOUNTING - PLEATED BLIND
17A	097591-01-000	EA	SPRING - EXTENSION - PLEATED BLIND
17A	155748-01-000	EA	SPRING - EXTENSION - DAY/NIGHTER BLIND
18A	101031-01-000	YD	TAPE/GLIDE - 4.25" SPACING
19A	101033-02-000	EA	END CAP - LOW PROFILE TRACK - CLEAR FROM: 00-00-00 THRU: 09-04-05
	156172-04-01A	EA	END CAP - WALL TRACK - CLEAR FROM: 09-05-05 THRU: 99-99-99
20A	101033-08-000	EA	TRACK/WALL - 75" - FRT BUNK WINDOW OUTLOOK/SPIRIT 300-SERIES FROM: 00-00-00 THRU: 09-04-05
	156172-01-01A	EA	TRACK/WALL - 75" - BONE - FRT BUNK WINDOW OUTLOOK/SPIRIT 300-SERIES FROM: 09-05-05 THRU: 99-99-99
20A	101033-09-000	EA	TRACK - SIDE BUNK WDO OUTLOOK/SPIRIT 300/MINNIE WINNIE/SUNDANCER 400/VIEW/NAVION 500 FROM: 00-00-00 THRU: 09-04-05
	156172-02-01A	EA	TRACK - 32" - SIDE BUNK WINDOW OUTLOOK/SPIRIT 300-SER/MINNIE WINNIE/SUNDANCER 400-SER FROM: 09-05-05 THRU: 99-99-99
	156172-03-01A	EA	TRACK/WALL - 20" -BONE - SIDE BUNK WINDOW VIEW/NAVION 500-SERIES FROM: 09-05-05 THRU: 99-99-99
21A	102555-03-000	EA	BRACKET - (CLEAT TYPE) - F/BLIND HOLDOWN - MILKY WHITE

COPYRIGHT © 2006 WINNEBAGO INDUSTRIES INC.

CURTAIN & CUSHION GROUP (CONTINUED)

HARDWARE (CONTINUED)

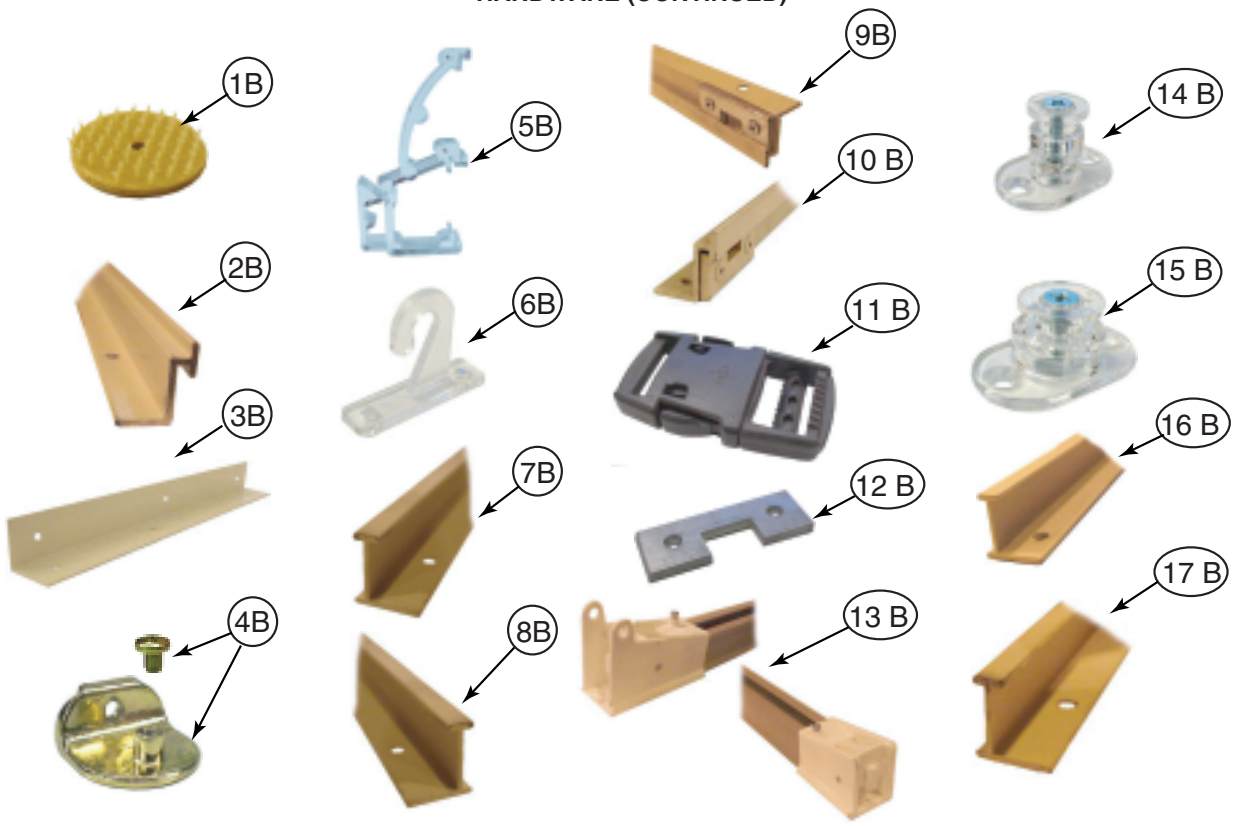

KEY	PART NUMBER	U/M	DESCRIPTION
1B	103242-01-000	EA	VELCRO HOOK - BEIGE 7/8" ROUND W/CENTER HOLE
	103242-02-000	EA	VELCRO HOOK - BLACK 7/8" ROUND W/CENTER HOLE
2B	105450-14-01A	EA	TRACK - CURTAIN - 90" - OFF WHITE - FRONT BUNK PRIVACY MINNIE/SPIRIT 300-SERIES
2B	105450-02-01A	EA	TRACK - CURTAIN - 48" - OFF WHITE - REAR PRIVACY MINNIE/SPIRIT 300-SERIES
2B	105450-08-01A	EA	TRACK - CURTAIN - 38" - OFF WHITE - REAR PRIVACY MINNIE/SPIRIT 300-SERIES
3B	105648-01-02A	EA	BRACE - VALANCE - 14" - OFF WHITE
4B	106544-01-000	EA	PULL - SHADE/BRASS
4B	106544-01-001	EA	SCREW - SHADE/BRASS
4B	106544-02-000	EA	PULL-SHADE - NICKEL
5B	109353-04-000	EA	CLIP - VALANCE SLAT MOUNTING - CLEAR PLASTIC
6B	109441-03-000	EA	BRACKET/HOOK - BLIND HOLD DOWN - NEW DESIGN/CLEAR
	109441-02-000	EA	SPACER/BRACKET - BLIND HOLD DOWN
7B	126456-03-05A	EA	TRACK/WRAPAROUND - PASSENGER - RIVERSTONE - ADVENTURER/SUNCRUISER G-SERIES
	126456-03-06A	EA	TRACK/WRAPAROUND - PASSENGER - CASHMERE - ADVENTURER/SUNCRUISER G-SERIES
8B	126456-04-05A	EA	TRACK/WRAPAROUND - DRIVER - RIVERSTONE - ADVENTURER/SUNCRUISER G-SERIES
	126456-04-06A	EA	TRACK/WRAPAROUND - DRIVER - CASHEMERE - ADVENTURER/SUNCRUISER G-SERIES
9B	127254-04-05A	EA	TRACK/WRAPARND-DRVR-GLACIER - SIGHTSEER/SUNOVA D-SERIES, VOYAGE/SUNRISE F-SERIES
10B	127254-14-03A	EA	TRACK/WRAPARND-PASS-GLACIER - SIGHTSEER/SUNOVA D-SERIES, VOYAGE/SUNRISE F-SERIES
11B	129491-01-000	EA	CATCH - SNAP HOOK - 1"
12B	130549-01-01A	EA	STOP - CURTAIN TRACK
13B	138460-07-03A	EA	TRACK - PASSENGER - RIVERSTONE- VECTRA/HORIZON S-SERIES/TOUR/ELLIPSE R-SERIES
	138460-07-04A	EA	TRACK - PASS ENGERY - CASHMERE- VECTRA/HORIZON S-SERIES/TOUR/ELLIPSE R-SERIES
13B	138460-08-03A	EA	TRACK - DRIVER - RIVERSTONE- VECTRA/HORIZON S-SERIES/TOUR/ELLIPSE R-SERIES
	138460-08-04A	EA	TRACK - DRIVER - CASHMERE- VECTRA/HORIZON S-SERIES/TOUR/ELLIPSE R-SERIES
14B	141634-01-000	EA	BRACKET-(BOBBIN TYPE) 7/8"H HOLDUPBASE(OVAL)-2 HOLE-CLEAR
15B	143805-01-000	EA	BRACKET-(BOBBIN TYPE) 1/2"H HOLDUPBASE(OVAL)-2 HOLES CLEAR
16B	146591-01-02A	EA	TRACK - CURTAIN - LEFT HAND - RIVERSTONE - JOURNEY/MERIDIAN P-SERIES
	146591-01-03A	EA	TRACK - CURTAIN - LEFT HAND - CASHMERE - JOURNEY/MERIDIAN P-SERIES
17B	146591-02-02A	EA	TRACK - CURTAIN - RIGHT HAND - RIVERSTONE - JOURNEY/MERIDIAN P-SERIES
	146591-02-03A	EA	TRACK - CURTAIN - RIGHT HAND - CASHMERE - JOURNEY/MERIDIAN P-SERIES
	154316-01-01A	EA	BRACE/ANGLE - W/HOLE - CASHMERE

ACCESSORIES

KEY	PART NUMBER	U/M	DESCRIPTION
	057534-01-000	EA	TIEBACK - CLEAR PLASTIC - 6"

CURTAIN & CUSHION GROUP (CONTINUED)

FABRICS

TR0 IS NOT AVAILABLE

2006 FAMILY	T11/TK0 MEADOW GREEN	T12/TK1 GINGERSNAP	T13/TK2 STONEDUST
BUCKET	562H BUCKET	562H BUCKET	562H BUCKET
	INSERT -126883-Y5-000	148797-71-000	INSERT - 126883-Y6-000
	BOXING/SKIRT - 148797-69-000		BOXING/SKIRT - 148797-15-000
LEATHER (OPT.)	562H BUCKET	562H BUCKET	562H BUCKET
	079680-25-000 (GRAY CAB)	079680-25-000 (GRAY CAB)	079680-25-000 (GRAY CAB)
	142523-04-000 (DRIFTWOOD CAB)	142523-04-000 (DRIFTWOOD CAB)	142523-03-000 (PUTTY CAB)
DINETTE (STD.)	SQUARE CLUB	SQUARE CLUB	SQUARE CLUB
	126883-Y5-000	148797-70-000	126883-Y6-000
DINETTE (45H OPT.)	SQ. CLUB W/VERT. SEWLINES	SQ. CLUB W/VERT. SEWLINES	SQ. CLUB W/VERT. SEWLINES
	INSERT - 148797-69-000	INSERT - 148797-71-000	INSERT - 126883-Y6-000
	BACK/SEAT - 126883-Y5-000	BACK/SEAT - 148797-70-000	BACK/SEAT - 148797-15-000
OPT. U-SHAPED	126883-Y5-000	148797-70-000	126883-Y6-000
DINETTE PADS	PAD- 148797-69-000	PAD- 148797-71-000	PAD- 148797-15-000
	TABS- 126883-Y5-000	TABS- 148797-70-000	TABS- 1126883-Y6-000
U-SHAPED DINETTE PADS	148797-69-000	148797-71-000	148797-15-000
SOFA	695 SOFA w/ 685 SEAT	695 SOFA w/ 685 SEAT	695 SOFA w/ 685 SEAT
	#325 STYLE JACK KNIFE	#325 STYLE JACK KNIFE	#325 STYLE JACK KNIFE
	126883-Y5-000	148797-70-000	126883-Y6-000
	WELT - 126883-Y5-000	WELT - 148797-70-000	WELT - 148797-15-000
LOUNGE CHAIR	465 CHAIR	465 CHAIR	465 CHAIR
	148797-69-000	148797-71-000	148797-15-000
LOUNGE WINDOWS	CUFFED VALANCE	CUFFED VALANCE	CUFFED VALANCE
	BODY - 126883-Y5-000	BODY - 148797-70-000	BODY - 126883-Y6-000
	OVERLAY - 148797-69-000	OVERLAY - 148797-71-000	OVERLAY - 148797-15-000
	1/4" WELT - 148797-69-000	1/4" WELT - 148797-71-000	1/4" WELT - 148797-15-000
	LEGS - 148797-69-000	LEGS - 148797-71-000	LEGS - 148797-15-000
	BRAID - 139041-50-000	BRAID - 139041-53-000	BRAID - 139041-51-000
ENTRANCE DOOR (STD.)	MODERATE VALANCE W/WELT	MODERATE VALANCE W/WELT	MODERATE VALANCE W/WELT
	WRAP - 126883-Y5-000	WRAP - 148797-70-000	WRAP - 126883-Y6-000
	BRAID - 139041-50-000	BRAID - 139041-53-000	BRAID - 139041-51-000
ENTRANCE DOOR (45H OPT.)	MODERATE VALANCE W/WELT	MODERATE VALANCE W/WELT	MODERATE VALANCE W/WELT
	WRAP - 126883-Y5-000	WRAP - 148797-70-000	WRAP - 126883-Y6-000
	BRAID - 139041-50-000	BRAID - 139041-53-000	BRAID - 139041-51-000
	CLOCK - 142368-01-02A	CLOCK - 142368-01-02A	CLOCK - 142368-01-02A

COPYRIGHT © 2006 WINNEBAGO INDUSTRIES INC.

CURTAIN & CUSHION GROUP (CONTINUED)

FABRICS (CONTINUED)

2006 FAMILY	T11/TK0 MEADOW GREEN	T12/TK1 GINGERSNAP	T13/TK2 STONEDUST
BEDROOM WDO TREATMENT	CUFFED VALANCE	CUFFED VALANCE	CUFFED VALANCE
	BODY - 137813-E4-000	BODY - 137813-G5-000	BODY - 137813-G4-000
	OVERLAY - 137813-B3-000	OVERLAY - 137813-G6-000	OVERLAY - 137813-G3-00
	1/2" WELT - 137813-E4-000	1/2" WELT - 137813-G5-000	1/2" WELT - 137813-G4-000
	1/4" WELT - 137813-E4-000	1/4" WELT - 137813-G5-000	1/4" WELT - 137813-G4-000
	LEGS - 137813-E4-000	LEGS - 137813-G5-000	LEGS - 137813-G4-000
BEDCOVER	BEDCAP W/1/2" N-G WELT	BEDCAP W/1/2" N-G WELT	BEDCAP W/1/2" N-G WELT
	137813-B3-000	137813-G6-000	137813-G3-000
QUILT PATTERN	6" CHANNEL	6" CHANNEL	6" CHANNEL
SHAMS	SHAMS W/1/2" N-G WELT	SHAMS W/1/2" N-G WELT	SHAMS W/1/2" N-G WELT
	BODY: 137813-B3-000	BODY: 137813-G5-000	BODY: 137813-G3-000
	WELT: 137813-E4-000	WELT: 137813-G6-000	WELT: 137813-G4-000
VANITY STOOL 329B/327L	STOOL W/REMOVABLE LID	STOOL W/REMOVABLE LID	STOOL W/REMOVABLE LID
	STOOL - 137813-B3-000	STOOL - 137813-G6-000	STOOL - 137813-G3-000
	LID - 137813-B3-000	LID - 137813-G6-000	LID - 137813-G3-000
	TRIM BAND - 137813-E4-000	TRIM BAND - 137813-G5-000	TRIM BAND - 137813-G4-000
	1/4" WELT - 137813-E4-000	1/4" WELT- 137813-G5-000	1/4" WELT - 137813-G4-000
	*** HANDLE COLOR - NICKEL***	*** HANDLE COLOR - NICKEL***	*** HANDLE COLOR - NICKEL***
CARPET	152251-05-01A	152251-06-01A	152251-05-06A
	PALE SAGE	WHEATFIELD	CAST IRON
TIRE COVER	142523-05-000	142523-05-000	142523-05-000
LOUNGE PILLOW 45H OPT.	17x17" SQUARE	17x17" SQUARE	17x17" SQUARE
	BODY - 148797-69-000	BODY - 148797-71-000	BODY - 148797-15-000
	BRAID - 139041-50-000	BRAID - 139041-53-000	BRAID - 139041-51-000
FWA, PRIVACY & OVHD. CURTAINS	137813-G4-000	137813-G5-000	137813-G4-000
OVERHEAD BUNK	148797-69-000	148797-71-000	148797-15-000
OVERHEAD BUNK VALANCE (45H OPT)	ABBOTT VALANCE	ABBOTT VALANCE	ABBOTT VALANCE
	UNDERLAY - 148797-69-000	UNDERLAY - 148797-71-000	UNDERLAY - 148797-15-000
	OVERLAY - 126883-Y5-000	OVERLAY - 148797-70-000	OVERLAY - 126883-Y6-000
	1/4" WELT - 148797-69-000	1/4" WELT - 148797-71-000	1/4" WELT - 148797-15-000
DIVIDER CURTAIN	137813-E4-000/137813-B3-000	137813-G5-000/137813-G6-000	137813-G4-000/137813-G3-000
DAY/NIGHTER	094911-53/094911-50	094911-66/094911-64	094911-53/094911-50
	COTTON/WT. DECO	SANDSTONE/PEARL	COTTON/WT. DECO
GALLEY BLINDS	386 SNOCAP	386 SNOCAP	386 SNOCAP
CEILING MATERIAL	113979-09-01A	113979-09-01A	113979-09-01A

COPYRIGHT © 2006 WINNEBAGO INDUSTRIES INC.

DRIVERS COMPARTMENT GROUP

FRONT INTERIOR

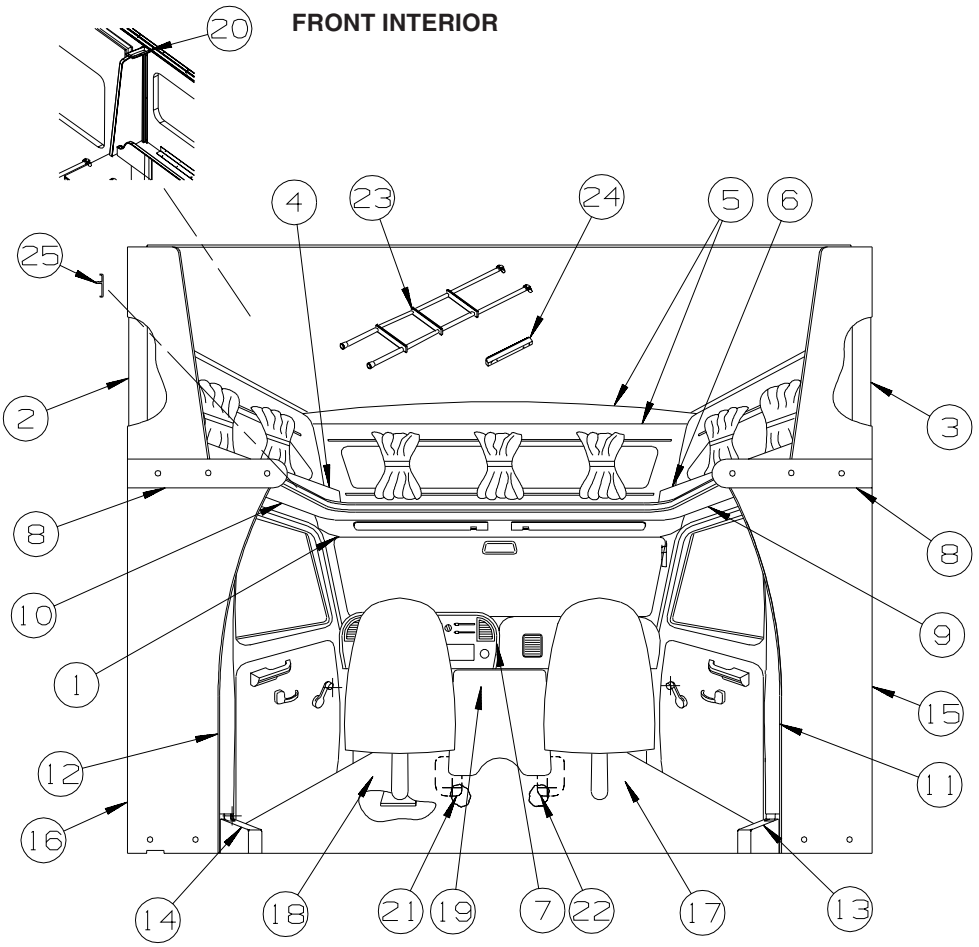

FORD

KEY	PART NUMBER	U/M	DESCRIPTION
1	106448-06-P13	EA	HEADLINER - W/VINYL - MEDIUM FLINT
1	106448-06-T11	EA	HEADLINER - W/VINYL - MEDIUM PEBBLE FROM: 00-00-00 THRU: 06-19-05
1	106448-07-T11	EA	HEADLINER - W/VINYL - MEDIUM PEBBLE FROM: 06-20-05 THRU: 99-99-99
2	109709-01-01A	EA	BRACKET - WINGWALL - OFF WHITE
3	109709-02-01A	EA	BRACKET - WINGWALL - OFF WHITE
4	141795-01-S01	EA	CABINET - HAMPER - W/DOOR - W/O HARDWARE (T11, TK0)
4	141795-01-T12	EA	CABINET - HAMPER - W/DOOR - W/O HARDWARE (T12, TK1)
4	141795-01-S03	EA	CABINET - HAMPER - W/DOOR - W/O HARDWARE (T13, TK2)
4	141795-01-R08	EA	CABINET - HAMPER - W/DOOR - W/O HARDWARE (TS5)
5	141829-01-01A	EA	TRIM - J MOLDING - OFF WHITE - 96"
6	141795-02-S01	EA	CABINET - HAMPER - W/DOOR - W/O HARDWARE (T11, TK0)
6	141795-02-T12	EA	CABINET - HAMPER - W/DOOR - W/O HARDWARE (T12, TK1)
6	141795-02-S03	EA	CABINET - HAMPER - W/DOOR - W/O HARDWARE (T13, TK2)
6	141795-02-R08	EA	CABINET - HAMPER - W/DOOR - W/O HARDWARE (TS5)
7	150974-01-03A	EA	APPLIQUE - BEZEL - INSTRUMENT PANEL - BRUSHED PEWTER - MEDIUM FLINT
7	150974-01-04A	EA	APPLIQUE - BEZEL - INSTRUMENT PANEL - LEATHER LASER WAVE - MEDIUM PEBBLE
8	141793-01-S01	EA	CAP - SLEEPERBOARD (T11)
8	141793-01-T12	EA	CAP - SLEEPERBOARD (T12)
8	141793-01-S03	EA	CAP - SLEEPERBOARD (T13)
8	141793-01-S88	EA	CAP - SLEEPERBOARD (TK0)
8	141793-01-TK1	EA	CAP - SLEEPERBOARD (TK1)
8	141793-01-S90	EA	CAP - SLEEPERBOARD (TK2)
8	141793-01-R08	EA	CAP - SLEEPERBOARD (TS5)
9	106447-09-R13	EA	TRIM - CAB DOOR - UPPER/RIGHT HAND - MEDIUM FLINT
9	106447-09-T11	EA	TRIM - CAB DOOR - UPPER/RIGHT HAND - MEDIUM PEBBLE
10	106447-10-P13	EA	TRIM - CAB DOOR - UPPER/LEFT HAND - MEDIUM FLINT
10	106447-10-T11	EA	TRIM - CAB DOOR - UPPER/LEFT HAND - MEDIUM PEBBLE
11	125031-01-H04	EA	TRIM - CAB - B-PILLAR - PASSENGER SIDE - MEDIUM FLINT
11	125031-01-T11	EA	TRIM - CAB - B-PILLAR - PASSENGER SIDE - MEDIUM PEBBLE

COPYRIGHT © 2006 WINNEBAGO INDUSTRIES INC.

DRIVERS COMPARTMENT GROUP (CONTINUED)

FRONT INTERIOR (CONTINUED)

KEY	PART NUMBER	U/M	DESCRIPTION
12	125031-02-H04	EA	TRIM - CAB - B-PILLAR - DRIVER SIDE - MEDIUM FLINT
12	125031-02-T11	EA	TRIM - CAB - B-PILLAR - DRIVER SIDE - MEDIUM PEBBLE
13	106431-01-02A	EA	COVER - SEATBELT RECOIL - PASSENGER SIDE - VW GREY - MEDIUM FLINT
13	106431-01-23A	EA	COVER - SEATBELT RECOIL - PASSENGER - MEDIUM PEBBLE
14	106431-02-02A	EA	COVER - SEATBELT RECOIL - DRIVER SIDE - VW GREY - MEDIUM FLINT
14	106431-02-23A	EA	COVER - SEATBELT RECOIL - DRIVER - MEDIUM PEBBLE
15	152161-01-T11	EA	WINGWALL - INNER/LOWER (T11, TK0)
15	152161-01-T12	EA	WINGWALL - INNER/LOWER (T12, TK1)
15	152161-01-T13	EA	WINGWALL - INNER/LOWER (T13, TK2)
15	152161-01-TS5	EA	WINGWALL - INNER/LOWER (TS5)
16	152161-02-T11	EA	WINGWALL - INNER/LOWER (T11, TK0)
16	152161-02-T12	EA	WINGWALL - INNER/LOWER (T12, TK1)
16	152161-02-T13	EA	WINGWALL - INNER/LOWER (T13, TK2)
16	152161-02-TS5	EA	WINGWALL - INNER/LOWER (TS5)
17	125780-01-000	EA	MAT - FLOOR - FRONT PASSENGER - “W” - FORD (GRAY) - MEDIUM FLINT
17	155266-01-01A	EA	MAT - FLOOR - FRONT PASSENGER - “W” - FORD - PEBBLE BROWN - MEDIUM PEBBLE
18	125780-02-000	EA	MAT - FLOOR - FRONT DRIVER - “W” - FORD (GRAY) - MEDIUM FLINT
18	155266-02-01A	EA	MAT - FLOOR - FRONT DRIVER - “W” - FORD - PEBBLE BROWN - MEDIUM PEBBLE
19	147623-01-01A	EA	TRAY - BEVERAGE - W/LOWER POCKET (TRIMLINE CONSOLE) GRAY - MEDIUM FLINT
19	147623-01-02A	EA	TRAY - BEVERAGE - W/LOWER POCKET (TRIMLINE CONSOLE) PEBBLE - MEDIUM PEBBLE
19	151391-01-01A	EA	PAD/TRAY - BEVERAGE TRAY
19	151391-02-01A	EA	PAD/CUP - BEVERAGE TRAY
20	153474-01-11A	EA	COVER/WIRE - SATELLITE RADIO - BRIGHT WHITE FROM: 01-05-05 THRU: 99-99-99
21	135426-01-000	EA	INSULATION-FLOOR, CAB, LH
22	135426-02-000	EA	INSULATION-FLOOR, CAB, RH
23*	106025-02-01A	EA	LADDER - BUNK - 52” - BLACK
24	094658-02-N01	EA	HANDLE - BUNK - 1.1" X 2" X 14.2" - OAK - PORTSMOUTH OAK FROM: 00-00-00 THRU: 09-04-05
24	094658-04-T11	EA	HANDLE - BUNK - 1.1" X 2" X 14.9" - PORTSMOUTH OAK FROM: 09-05-05 THRU: 99-99-99
24	094658-02-S88	EA	HANDLE - BUNK - 1.1" X 2" X 14.2" - SIERRA MAPLE FROM: 00-00-00 THRU: 09-04-05
24	094658-04-TK0	EA	HANDLE - BUNK - 1.1" X 2" X 14.9" - SIERRA MAPLE FROM: 09-05-05 THRU: 99-99-99
25	119520-01-01A	FT	MOLDING-T - OFFSET W/EDGE LIP - 1.3" FACE - OFF WHITE

***COMPONENT PARTS LISTED LATER IN THIS GROUP**

COPYRIGHT © 2006 WINNEBAGO INDUSTRIES INC.

DRIVERS COMPARTMENT GROUP (CONTINUED)

FRONT INTERIOR (CONTINUED)

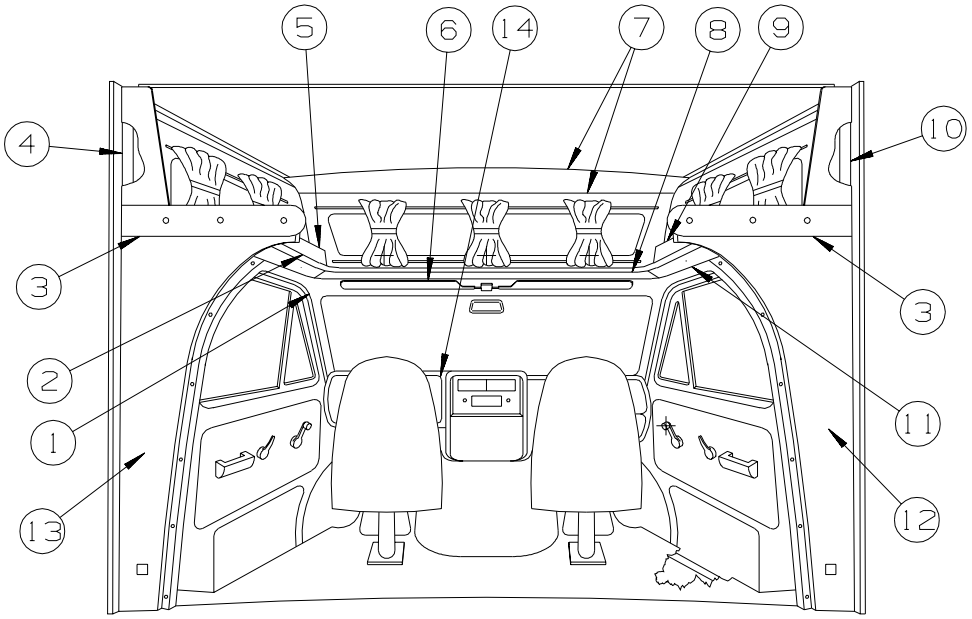

CHEVY

KEY	PART NUMBER	U/M	DESCRIPTION
1	156218-02-T11	EA	HEADLINER - W/VINYL
2	119520-01-01A	EA	MOLDING-T - OFFSET W/EDGE LIP - 1.3" FACE - OFF WHITE
3	141793-01-S01	EA	CAP - SLEEPERBOARD (T11)
3	141793-01-T12	EA	CAP - SLEEPERBOARD (T12)
3	141793-01-S03	EA	CAP - SLEEPERBOARD (T13)
3	141793-01-S88	EA	CAP - SLEEPERBOARD (TK0)
3	141793-01-TK1	EA	CAP - SLEEPERBOARD (TK1)
3	141793-01-S90	EA	CAP - SLEEPERBOARD (TK2)
4	109709-01-01A	EA	BRACKET - WINGWALL - OFF WHITE
5	141795-01-S01	EA	CABINET - HAMPER - W/DOOR - W/O HARDWARE (T11, TK0)
5	141795-01-T12	EA	CABINET - HAMPER - W/DOOR - W/O HARDWARE (T12, TK1)
5	141795-01-S03	EA	CABINET - HAMPER - W/DOOR - W/O HARDWARE (T13, TK2)
6*	106025-02-01A	EA	LADDER - BUNK - 52” - BLACK
	094658-02-N01	EA	HANDLE - BUNK - 1.1" X 2" X 14.2" - OAK - PORTSMOUTH OAK FROM: 00-00-00 THRU: 09-04-05
	094658-04-T11	EA	HANDLE - BUNK - 1.1" X 2" X 14.9" - PORTSMOUTH OAK FROM: 09-05-05 THRU: 99-99-99
	094658-02-S88	EA	HANDLE - BUNK - 1.1" X 2" X 14.2" - SIERRA MAPLE FROM: 00-00-00 THRU: 09-04-05
	094658-04-TK0	EA	HANDLE - BUNK - 1.1" X 2" X 14.9" - SIERRA MAPLE FROM: 09-05-05 THRU: 99-99-99
7	141829-01-01A	EA	TRIM - J MOLDING - OFF WHITE - 96"
8	156218-01-T11	EA	HEADLINER - W/VINYL
9	141795-02-S01	EA	CABINET - HAMPER - W/DOOR - W/O HARDWARE (T11, TK0)
9	141795-02-T12	EA	CABINET - HAMPER - W/DOOR - W/O HARDWARE (T12, TK1)
9	141795-02-S03	EA	CABINET - HAMPER - W/DOOR - W/O HARDWARE (T13, TK2)
10	109709-02-01A	EA	BRACKET - WINGWALL - OFF WHITE
11	156218-03-T11	EA	HEADLINER - W/VINYL
12	141803-01-S01	EA	WINGWALL - INNER/LOWER (T11, TK0)
12	141803-01-T12	EA	WINGWALL - INNER/LOWER (T12, TK1)
12	141803-01-S03	EA	WINGWALL - INNER/LOWER (T13, TK2)
13	141803-02-S01	EA	WINGWALL - INNER/LOWER (T11, TK0)
13	141803-02-T12	EA	WINGWALL - INNER/LOWER (T12, TK1)
13	141803-02-S03	EA	WINGWALL - INNER/LOWER (T13, TK2)
14	150974-03-04A	EA	APPLIQUE - BEZEL - INSTRUMENT PANEL - LEATHER LASER WAVE

***COMPONENT PARTS LISTED LATER IN THIS GROUP**

COPYRIGHT © 2006 WINNEBAGO INDUSTRIES INC.

DRIVERS COMPARTMENT GROUP (CONTINUED)

FRONT INTERIOR (CONTINUED)

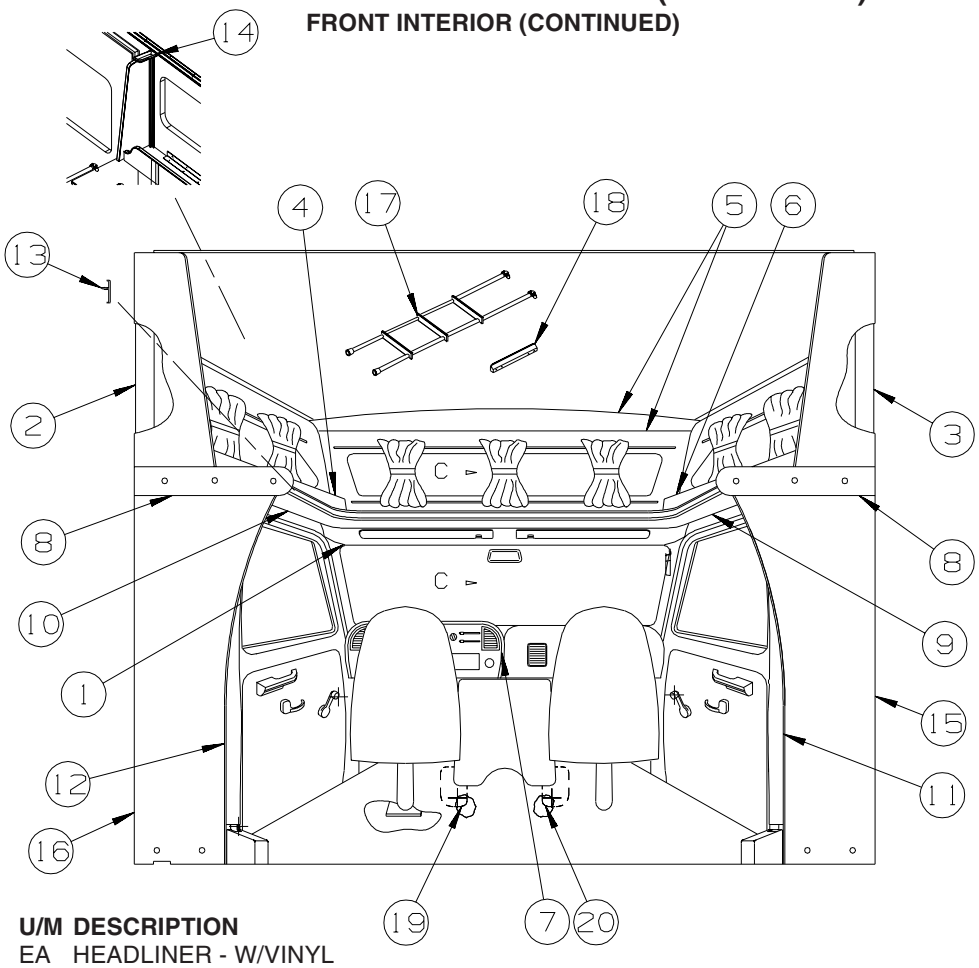

FORD SPECIAL EDITION 329SB, 331SC

KEY	PART NUMBER	U/M	DESCRIPTION
1	106448-07-T11	EA	HEADLINER - W/VINYL
2	109709-01-01A	EA	BRACKET - WINGWALL - OFF WHITE
3	109709-02-01A	EA	BRACKET - WINGWALL - OFF WHITE
4	141795-01-TR0	EA	CABINET - HAMPER - W/DOOR - W/O HARDWARE
5	141829-01-01A	EA	TRIM - J MOLDING - OFF WHITE - 96"
6	141795-02-TR0	EA	CABINET - HAMPER - W/DOOR - W/O HARDWARE
7	150974-01-04A	EA	APPLIQUE - BEZEL - INSTRUMENT PANEL - LEATHER LASER WAVE
8	141793-01-TR0	EA	CAP - SLEEPERBOARD
9	106447-09-T11	EA	TRIM - CAB DOOR - UPPER/RIGHT HAND
10	106447-10-T11	EA	TRIM - CAB DOOR - UPPER/LEFT HAND
11	125031-01-T11	EA	TRIM - CAB - B-PILLAR - PASSENGER SIDE
12	125031-02-T11	EA	TRIM - CAB - B-PILLAR - DRIVER SIDE
13	119520-01-01A	FT	MOLDING-T - OFFSET W/EDGE LIP - 1.3" FACE - OFF WHITE
14			NOT USED
15	152161-01-TR0	EA	WINGWALL - INNER/LOWER
16	152161-02-TR0	EA	WINGWALL - INNER/LOWER
17*	106025-02-01A	EA	LADDER - BUNK - 52” - BLACK
18	094658-02-N01	EA	HANDLE - BUNK - 1.1" X 2" X 14.2" - OAK - PORTSMOUTH OAK FROM: 00-00-00 THRU: 09-04-05
18	094658-04-T11	EA	HANDLE - BUNK - 1.1" X 2" X 14.9" - PORTSMOUTH OAK FROM: 09-05-05 THRU: 99-99-99
18	094658-02-S88	EA	HANDLE - BUNK - 1.1" X 2" X 14.2" - SIERRA MAPLE FROM: 00-00-00 THRU: 09-04-05
18	094658-04-TK0	EA	HANDLE - BUNK - 1.1" X 2" X 14.9" - SIERRA MAPLE FROM: 09-05-05 THRU: 99-99-99
19	135426-01-000	EA	INSULATION-FLOOR, CAB, LH
20	135426-02-000	EA	INSULATION-FLOOR, CAB, RH

***COMPONENT PARTS LISTED LATER IN THIS GROUP**

COMPONENT PARTS FOR FRONT INTERIOR

106025-02-01A

KEY	PART NUMBER	U/M	DESCRIPTION	VENDOR NO.
	106025-01-700	EA	BRACKET SET-F/BUNK LADDER	08-0030-00
	106025-01-701	EA	END CAP-F/STEP LADDER RUNGS	

COPYRIGHT © 2006 WINNEBAGO INDUSTRIES INC.

DRIVERS COMPARTMENT GROUP (CONTINUED)

CABINETS

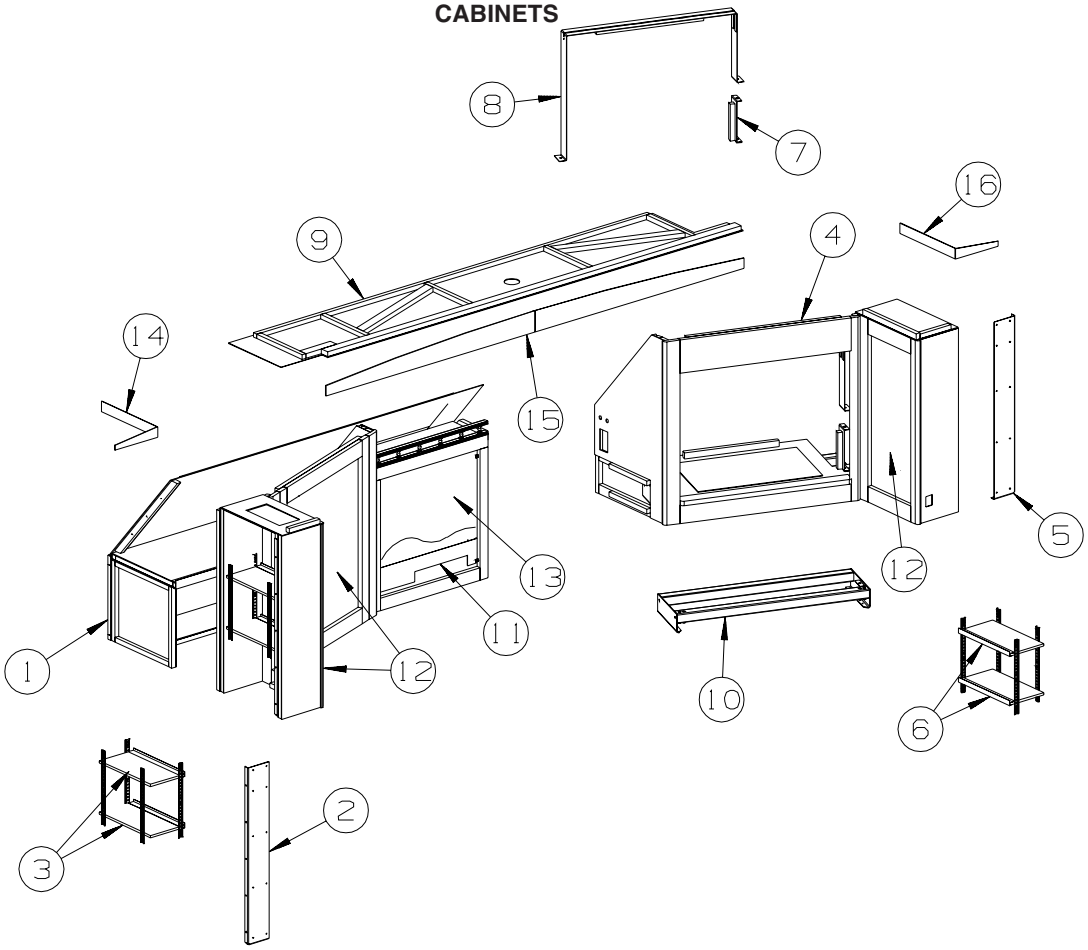

KEY	PART NUMBER	U/M	DESCRIPTION
1	149244-05-S01	EA	CABINET - OVERHEAD/ENTERTAINMENT CENTER/LH - W/O DOOR/HDW - PORTSMOUTH OAK FROM: 00-00-00 THRU: 08-28-05
1	149244-07-T11	EA	CABINET - OVERHEAD/ENTERTAINMENT CENTER/LH - W/O DOOR/HDW - PORTSMOUTH OAK FROM: 08-29-05 THRU: 99-99-99
1	149244-05-S88	EA	CABINET - OVERHEAD/ENTERTAINMENT CENTER/LH - W/O DOOR/HDW - SIERRA MAPLE FROM: 00-00-00 THRU: 08-28-05
1	149244-07-TK0	EA	CABINET - OVERHEAD/ENTERTAINMENT CENTER/LH - W/O DOOR/HDW - SIERRA MAPLE FROM: 08-29-05 THRU: 99-99-99
1	149244-06-S01	EA	CABNT CTR/LH-W/O DR/HDW - PORTSMOUTH OAK - HOME THEATER SYSTEM OR DVD/VCR STEREO FROM: 00-00-00 THRU: 08-28-05
1	149244-08-T11	EA	CABNT CTR/LH-W/O DR/HDW - PORTSMOUTH OAK - HOME THEATER SYSTEM OR DVD/VCR STEREO FROM: 08-29-05 THRU: 99-99-99
1	149244-06-S88	EA	CABNT CTR/LH-W/O DR/HDW - SIERRA MAPLE - HOME THEATER SYSTEM OR DVD/VCR STEREO FROM: 00-00-00 THRU: 08-28-05
1	149244-08-TK0	EA	CABNT CTR/LH-W/O DR/HDW - SIERRA MAPLE - HOME THEATER SYSTEM OR DVD/VCR STEREO FROM: 08-29-05 THRU: 99-99-99
2	136268-04-03B	EA	BRACKET - WINGWALL - OFF WHITE
3	149244-34-S07	EA	SHELF - W/PLASTIC MOLDING - PORTSMOUTH OAK
3	149244-34-SW0	EA	SHELF - W/PLASTIC MOLDING - SIERRA MAPLE
4	153382-01-S01	EA	CABINET - ENTERTAINMENT CENTER/TV - W/O DOORS/HDW - PORTSMOUTH OAK FROM: 00-00-00 THRU: 11-30-05
4	158696-01-T11	EA	CABINET - ENTERTAINMENT CENTER/TV - W/O DOORS/HDW - PORTSMOUTH OAK FROM: 12-01-05 THRU: 99-99-99
4	153382-01-S88	EA	CABINET - ENTERTAINMENT CENTER/TV - W/O DOORS/HDW - SIERRA MAPLE FROM: 00-00-00 THRU: 11-30-05
4	158696-01-TK0	EA	CABINET - ENTERTAINMENT CENTER/TV - W/O DOORS/HDW - SIERRA MAPLE FROM: 12-01-05 THRU: 99-99-99
	096764-02-000	EA	SLIPNOT - ANTISLIP - 1'WIDE (180' ROLLS) - WHITE FROM: 00-00-00 THRU: 04-24-05
5	136268-03-03B	EA	BRACKET - WINGWALL - OFF WHITE

COPYRIGHT © 2006 WINNEBAGO INDUSTRIES INC.

DRIVERS COMPARTMENT GROUP (CONTINUED)

CABINETS (CONTINUED)

KEY	PART NUMBER	U/M	DESCRIPTION
6	153382-22-S01	EA	SHELF - W/PLASTIC EDGE MOLDING - PORTSMOUTH OAK
			FROM: 00-00-00 THRU: 11-30-05
6	158696-22-T11	EA	SHELF - W/PLASTIC EDGE MOLDING - PORTSMOUTH OAK
			FROM: 12-01-05 THRU: 99-99-99
6	153382-22-S88	EA	SHELF - W/PLASTIC EDGE MOLDING - SIERRA MAPLE
			FROM: 00-00-00 THRU: 11-30-05
6	158696-22-TK0	EA	SHELF - W/PLASTIC EDGE MOLDING - SIERRA MAPLE
			FROM: 12-01-05 THRU: 99-99-99
7	136269-08-02B	EA	BRACKET/TV TIEDOWN - E-COATED
8	148247-08-02B	EA	STRAP/TIEDOWN - TV - E-COATED
			FROM: 00-00-00 THRU: 11-30-05
8	148247-13-02B	EA	STRAP/TIEDOWN - TV - E-COATED
			FROM: 12-01-05 THRU: 99-99-99
9	148349-01-R07	EA	CABINET - ENTERTAINMENT CENTER/TOP - W/O DOORS/HDW
10	148344-01-02B	EA	BRACKET - ENTERTAINMENT CENTER - E-COATED
			FROM: 00-00-00 THRU: 11-30-05
10	148344-04-02B	EA	BRACKET - ENTERTAINMENT CENTER - E-COATED
			FROM: 12-01-05 THRU: 99-99-99
11	142200-01-P07	EA	PANEL - VINYL COVERED - MEDIUM FLINT
			FROM: 00-00-00 THRU: 02-10-05
11	142200-05-S01	EA	PANEL - VINYL COVERED - MEDIUM FLINT
			FROM: 02-11-05 THRU: 99-99-99
11	142200-05-T11	EA	PANEL - VINYL COVERED - MEDIUM PEBBLE
11	142200-03-P07	EA	PANEL - VINYL COVERED - MEDIUM FLINT - INVERTER-DC/AC, 300 WATT
			FROM: 00-00-00 THRU: 02-10-05
11	142200-04-S01	EA	PANEL - VINYL COVERED - MEDIUM FLINT - INVERTER-DC/AC, 300 WATT
			FROM: 02-11-05 THRU: 99-99-99
11	142200-04-T11	EA	PANEL - VINYL COVERED - MEDIUM PEBBLE - INVERTER-DC/AC, 300 WATT
12	136954-70-T11	EA	DOOR - RAISED PANEL/OGEE EDGE - 12" X 26" - W/O HDW - PORTSMOUTH OAK
12	136954-70-TK0	EA	DOOR - RAISED PANEL/OGEE EDGE - 12" X 26" - W/O HDW - SIERRA MAPLE
	076767-04-000	EA	CABLE - STAINLESS STEEL - 5.9”
13	100708-30-000	EA	DOOR/GLASS - TV CABINET - 18.8" X 18.8" - W/O HARDWARE
14	148348-01-R07	EA	TRIM - ENTERTAINMENT CENTER
15	148348-02-R07	EA	TRIM - ENTERTAINMENT CENTER
16	148348-03-R07	EA	TRIM - ENTERTAINMENT CENTER

COPYRIGHT © 2006 WINNEBAGO INDUSTRIES INC.

ELECTRICAL GROUP

110V BODY WIRING

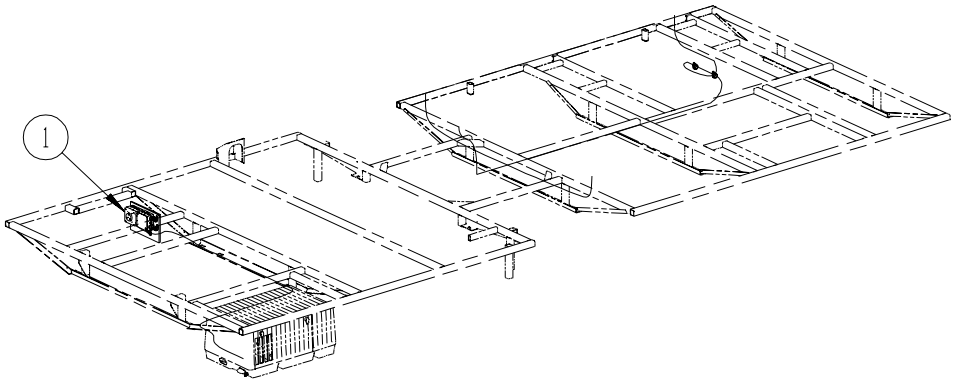

KEY	PART NUMBER	U/M	DESCRIPTION
1	024924-02-000	EA	RECEPTACLE - POWER CORD - W/PARTIAL PLATE

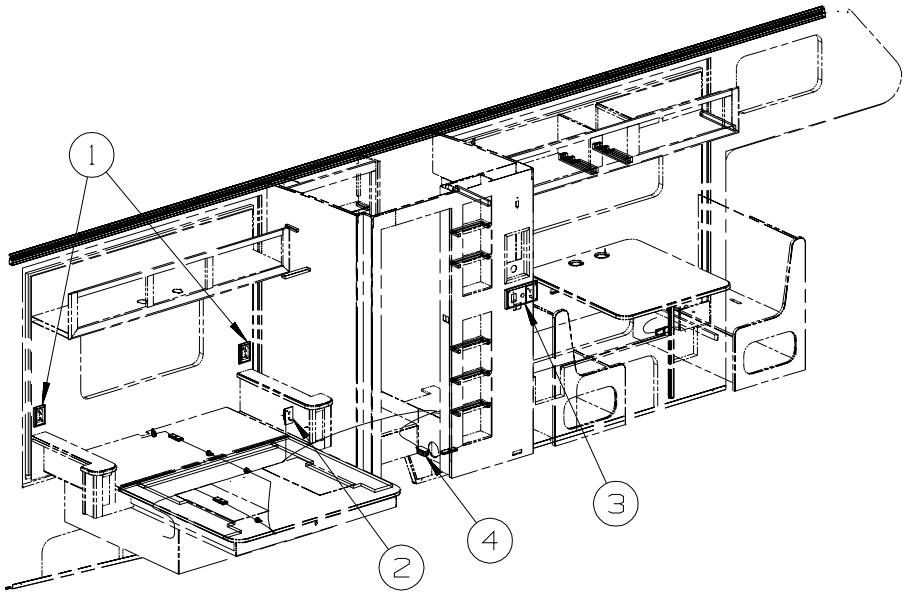

KEY	PART NUMBER	U/M	DESCRIPTION
1	133713-01-20A	EA	SPACER/RECEPTACLE - WHITE VINYL
1	133713-01-08A	EA	SPACER/RECEPTACLE - VINYL - PORTSMOUTH OAK
1	133713-01-22A	EA	SPACER/RECEPTACLE - VINYL - SIERRA MAPLE
1	058708-01-000	EA	RECEPTACLE - ELECTRIC - DOUBLE - BROWN
1	058708-06-000	EA	RECEPTACLE - DUPLEX - WHITE
2	058708-01-000	EA	RECEPTACLE - ELECTRIC - DOUBLE - BROWN
2	058708-06-000	EA	RECEPTACLE - DUPLEX - WHITE
3	133713-06-20A	EA	SPACER/RECEPTACLE - PHONE - VINYL - WHITE
3	133713-06-08A	EA	SPACER/RECEPTACLE - PHONE - VINYL - PORTSMOUTH OAK
3	133713-06-22A	EA	SPACER/RECEPTACLE - PHONE - VINYL - SIERRA MAPLE
3	058708-01-000	EA	RECEPTACLE - ELECTRIC - DOUBLE - BROWN
3	058708-06-000	EA	RECEPTACLE - DUPLEX - WHITE
4	058707-02-000	EA	RECEPTACLE - BLANK - JUNCTION BOX

COPYRIGHT © 2006 WINNEBAGO INDUSTRIES INC.

ELECTRICAL GROUP (CONTINUED)

110V BODY WIRING (CONTINUED)

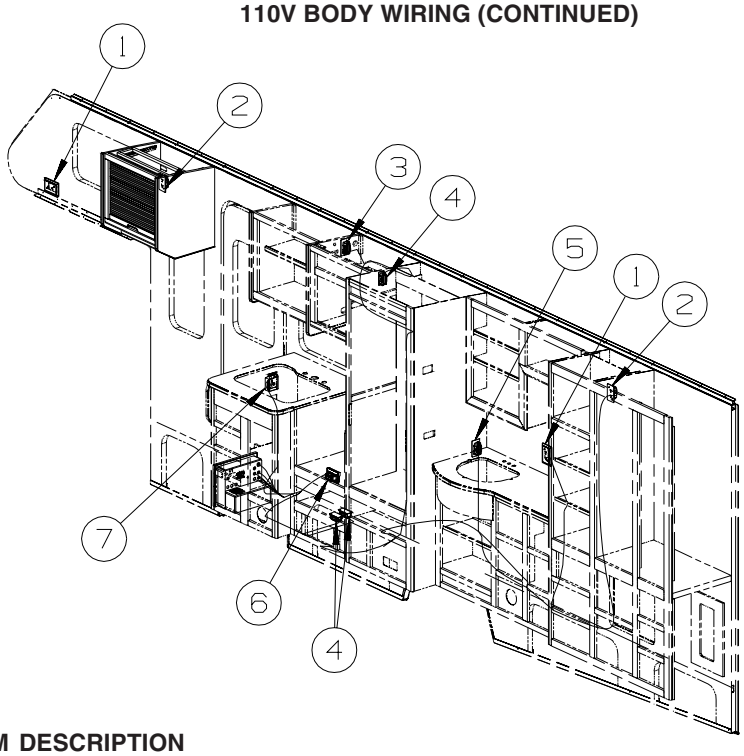

KEY	PART NUMBER	U/M	DESCRIPTION
1	133713-01-20A	EA	SPACER/RECEPTACLE - WHITE VINYL
1	133713-01-08A	EA	SPACER/RECEPTACLE - VINYL - PORTSMOUTH OAK
1	133713-01-22A	EA	SPACER/RECEPTACLE - VINYL - SIERRA MAPLE
1	058708-01-000	EA	RECEPTACLE - ELECTRIC - DOUBLE - BROWN
1	058708-06-000	EA	RECEPTACLE - DUPLEX - WHITE
2	058708-05-000	EA	RECEPTACLE - ELECTRIC - SINGLE - BROWN
3	058708-01-000	EA	RECEPTACLE - ELECTRIC - DOUBLE - BROWN
3	058708-06-000	EA	RECEPTACLE - DUPLEX - WHITE
4	058707-02-000	EA	RECEPTACLE - BLANK - JUNCTION BOX
5	058707-01-000	EA	RECEPTACLE - ELECTRIC - SINGLE - BROWN
6	131826-01-01A	EA	RECEPTACLE - EXTERIOR - W/COVER/GASKET - WHITE
7	147446-01-02A	EA	RECEPTACLE - GFCI - 15A 125V - BROWN
7	147450-01-02A	EA	PLATE - ELECTRICAL OUTLET - BROWN

COPYRIGHT © 2006 WINNEBAGO INDUSTRIES INC.

ELECTRICAL GROUP (CONTINUED)

12V BODY WIRING

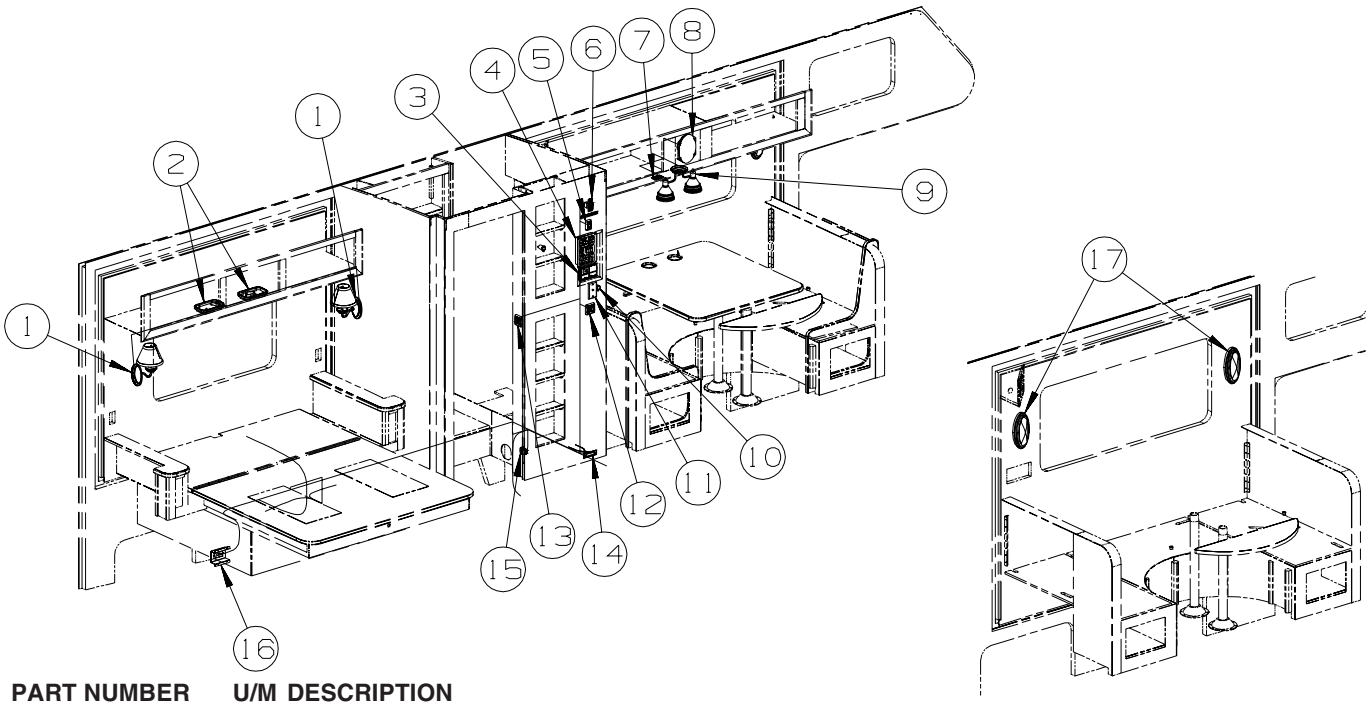

KEY	PART NUMBER	U/M	DESCRIPTION
1	119258-47-01A	EA	LAMP - WALL - UL/CSA - SATIN NICKEL
1	119257-15-01A	EA	SHADE - LAMP - LINEN SILKARA
1	067479-01-000	EA	BULB - 12V - #1076 - 1.80 AMP
2*	137417-02-01A	EA	LIGHT - DOME - SINGLE - W/SWITCH/OPTIC LENS - WHITE
3	135618-03-01A	EA	THERMOSTAT - ROOF A/C & FURNACE - WHITE
3	135618-01-01A	EA	THERMOSTAT - HEAT PUMP/FURNACE - WHITE
4*	134940-06-01A	EA	PANEL - MONITOR - 2 TANK - W/GENERATOR SWITCH - GENERATOR
4*	134940-07-01A	EA	PANEL - MONITOR - 2 TANK
5	135740-06-01A	EA	SWITCH - ROCKER - ON/OFF - LIGHTED - RED - DRAINAGE SYSTEM-HEATED
5	135741-01-01A	EA	SWITCH - BASE - SINGLE - BROWN - DRAINAGE SYSTEM-HEATED
5	135741-01-02A	EA	SWITCH - BASE - SINGLE - WHITE - DRAINAGE SYSTEM-HEATED
5	135742-01-01A	EA	BEZEL - SWITCH - SINGLE - BROWN - DRAINAGE SYSTEM-HEATED
5	135742-01-02A	EA	BEZEL - SWITCH - SINGLE - WHITE - DRAINAGE SYSTEM-HEATED
6	144363-09-02B	EA	PLATE - SWITCH - E-COATED - SLIDEOUT ROOM FRONT LEFT
6	108357-06-000	EA	SWITCH - ROCKER - DPDT - MOM/OFF/MOM - 6 TERM - W/O COVER - SLIDEOUT ROOM FRONT LEFT
6	108356-02-01A	EA	COVER/ACTUATOR SWITCH - 2 ROWS DIMPLES - BLACK - SLIDEOUT ROOM FRONT LEFT
6	108355-01-000	EA	HOUSING - SWITCH - SLIDEOUT ROOM FRONT LEFT
6	116220-01-000	EA	APPLIQUE - SWITCH/SLIDEOUT - SLIDEOUT ROOM FRONT LEFT
6	116549-01-000	EA	LABEL - WARNING - SLIDEOUT - SLIDEOUT ROOM FRONT LEFT
7	135740-01-01A	EA	SWITCH - ROCKER - SPST - ON/OFF - BROWN - DINETTE
7	135740-01-02A	EA	SWITCH - ROCKER - SPST - ON/OFF - WHITE - DINETTE
7	135741-01-01A	EA	SWITCH - BASE - SINGLE - BROWN - DINETTE
7	135741-01-02A	EA	SWITCH - BASE - SINGLE - WHITE - DINETTE
7	135742-01-01A	EA	BEZEL - SWITCH - SINGLE - BROWN - DINETTE
7	135742-01-02A	EA	BEZEL - SWITCH - SINGLE - WHITE - DINETTE
8	110465-01-000	EA	SPEAKER KIT,4 5X7 SPEAKERS - RADIO SPEAKERS
9	093575-37-01A	EA	LIGHT - CEILING/DOUBLE - SATIN NICKEL
9	117806-01-000	EA	BULB - 12V - #912 - 1.0 AMP
10	132958-01-000	EA	RECEPTACLE - 12 VOLT - MOUNTING FLANGE - BLACK
11	093253-01-02A	EA	PLATE - WALL - TELEPHONE - BROWN
11	093253-01-03A	EA	PLATE - WALL - TELEPHONE - WHITE

COPYRIGHT © 2006 WINNEBAGO INDUSTRIES INC.

ELECTRICAL GROUP (CONTINUED)

12V BODY WIRING (CONTINUED)

KEY	PART NUMBER	U/M	DESCRIPTION
12	135740-01-01A	EA	SWITCH - ROCKER - SPST - ON/OFF - BROWN - CEILING
12	135740-01-02A	EA	SWITCH - ROCKER - SPST - ON/OFF - WHITE - CEILING
12	135740-02-01A	EA	SWITCH - ROCKER - SPDT - ON/ON - BROWN - AISLE
12	135740-02-02A	EA	SWITCH - ROCKER - SPDT - ON/ON - WHITE - AISLE
12	135741-02-01A	EA	SWITCH - BASE - DOUBLE - BROWN
12	135741-02-02A	EA	SWITCH - BASE - DOUBLE - WHITE
12	135742-13-02A	EA	BEZEL - SWITCH - CEILING/AISLE - BROWN
12	135742-13-01A	EA	BEZEL - SWITCH - CEILING/AISLE - WHITE
13	135740-01-01A	EA	SWITCH - ROCKER - SPST - ON/OFF - BROWN
13	135740-01-02A	EA	SWITCH - ROCKER - SPST - ON/OFF - WHITE
13	135741-02-01A	EA	SWITCH - BASE - DOUBLE - BROWN
13	135741-02-02A	EA	SWITCH - BASE - DOUBLE - WHITE
13	135742-15-02A	EA	BEZEL - SWITCH - CEILING/SHOWER - BROWN
13	135742-15-01A	EA	BEZEL - SWITCH - CEILING/SHOWER - WHITE
14	061424-01-000	EA	LIGHT - AISLE - 12 VOLT - RECTANGULAR
15	108357-15-000	EA	SWITCH - ROCKER - DPDT - ON/NONE/ON - W/LIGHT W/O COVER - EXTERIOR WASH STATION
15	108356-04-01A	EA	COVER/ACTUATOR SWITCH - 2 ROWS DIMPLES W/LENS - BLACK - EXTERIOR WASH STATION
15	108355-01-000	EA	HOUSING - SWITCH - EXTERIOR WASH STATION
15	144363-02-04B	EA	PLATE - SWITCH - BLACK - EXTERIOR WASH STATION
16	130686-01-01A	EA	PLATE - WALL - TELEPHONE/COAX - WHITE
16	082134-01-000	EA	ADAPTER - TV - CABLE TO CABLE
16	082136-01-000	EA	NUT - HEX JAM - 3/8-32
16	087236-01-000	EA	LABEL - CABLE - INPUT
17	093575-26-03A	EA	LIGHT - CEILING/OVAL - SATIN NICKEL
17	117805-01-000	EA	BULB - 12V - #921F - 1.4 AMPS

***COMPONENT PARTS LISTED LATER IN THIS GROUP**

COPYRIGHT © 2006 WINNEBAGO INDUSTRIES INC.

ELECTRICAL GROUP (CONTINUED)

12V BODY WIRING (CONTINUED)

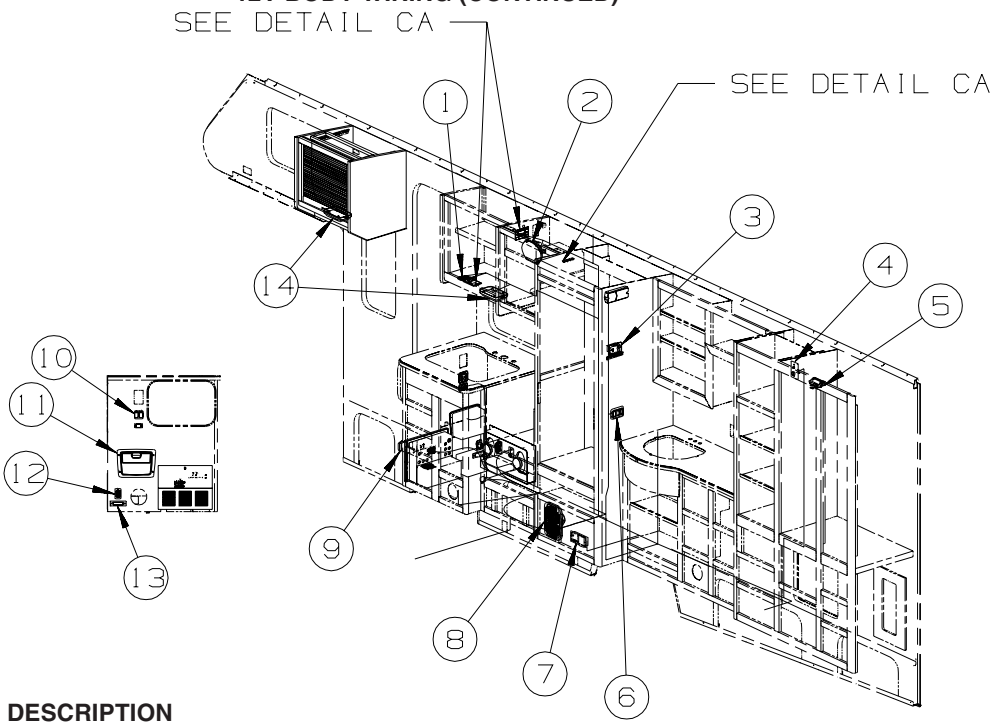

KEY	PART NUMBER	U/M	DESCRIPTION
1	135740-01-01A	EA	SWITCH - ROCKER - SPST - ON/OFF - BROWN - TV-13" W/DVD-12V
1	135740-01-02A	EA	SWITCH - ROCKER - SPST - ON/OFF - WHITE - TV-13" W/DVD-12V
1	135741-01-01A	EA	SWITCH - BASE - SINGLE - BROWN - TV-13" W/DVD-12V
1	135741-01-02A	EA	SWITCH - BASE - SINGLE - WHITE - TV-13" W/DVD-12V
1	135742-01-01A	EA	BEZEL - SWITCH - SINGLE - BROWN - TV-13" W/DVD-12V
1	135742-01-02A	EA	BEZEL - SWITCH - SINGLE - WHITE - TV-13" W/DVD-12V
2	110465-01-000	EA	SPEAKER KIT,4 5X7 SPEAKERS - RADIO SPEAKERS
3	140464-02-000	EA	CONTROL PANEL/SLIDEOUT - 2 CIRCUIT BOARDS/1 LED - SLIDEOUT ROOM REAR LEFTHAND
3	116549-01-000	EA	LABEL - WARNING - SLIDEOUT - SLIDEOUT ROOM REAR LEFTHAND
4	076319-09-000	EA	WALLPLATE - TV CABLE RECEPTACLE - SINGLE - BROWN
5*	087694-01-000	EA	LIGHT - WARDROBE/CLOSET - W/SWITCH
6	135740-01-01A	EA	SWITCH - ROCKER - SPST - ON/OFF - BROWN - BATH/CEILING
6	135740-01-02A	EA	SWITCH - ROCKER - SPST - ON/OFF - WHITE - BATH/CEILING
6	135740-02-01A	EA	SWITCH - ROCKER - SPDT - ON/ON - BROWN - AISLE
6	135740-02-02A	EA	SWITCH - ROCKER - SPDT - ON/ON - WHITE - AISLE
6	135741-03-01A	EA	SWITCH - BASE - TRIPLE - BROWN
6	135741-03-02A	EA	SWITCH - BASE - TRIPLE - WHITE
6	135742-24-02A	EA	BEZEL - SWITCH - CEILING/AISLE/BATH - BROWN
6	135742-24-01A	EA	BEZEL - SWITCH - CEILING/AISLE/BATH - WHITE
7	150138-01-02A	EA	DETECTOR - LP GAS - BROWN
8	150090-01-000	EA	SPEAKER - 6" X 9" - SUB-WOOFER - MAGNADYNE LS69W - HOME THEATER SOUND SYSTEM
8	151569-01-01A	EA	GRILLE - SPEAKER - 6" X 9" - SUB WOOFER - BLACK - HOME THEATER SOUND SYSTEM
9	116995-02-000	EA	SWITCH/MAGNET - ELECTRIC STEP - BLACK/WHITE- NORMALLY OPEN
10	135740-01-01A	EA	SWITCH - ROCKER - SPST - ON/OFF - BROWN - ENTRANCE STEP-ELEC.
10	135740-01-02A	EA	SWITCH - ROCKER - SPST - ON/OFF - WHITE - ENTRANCE STEP-ELEC.
10	135741-01-01A	EA	SWITCH - BASE - SINGLE - BROWN - ENTRANCE STEP-ELEC.
10	135741-01-02A	EA	SWITCH - BASE - SINGLE - WHITE - ENTRANCE STEP-ELEC.
10	135742-11-02A	EA	BEZEL - SWITCH - STEP - BROWN - ENTRANCE STEP-ELEC.
10	135742-11-01A	EA	BEZEL - SWITCH - STEP - WHITE - ENTRANCE STEP-ELEC.
11	141679-03-000	EA	CHARGER/DOCK STATION ONLY - FOR #GMRS100 TWO-WAY RADIO
11	141679-04-000	EA	RADIO/TWO-WAY W/BATTERY (EACH = 1) - 5 MILE - ASA GMRS100 FROM: 00-00-00 THRU: 12-04-05
11	141679-05-000	EA	RADIO/TWO-WAY W/BATTERY (EACH = 1) - 9 MILE - ASA GMRS200 FROM: 12-05-05 THRU: 99-99-99
12	108357-06-000	EA	SWITCH - ROCKER - DPDT - MOM/OFF/MOM - 6 TERM - W/O COVER
12	108356-11-01A	EA	COVER/ACTUATOR SWITCH - 3 GROOVES - AUX BATT - BLACK
12	108355-01-000	EA	HOUSING - SWITCH
12	098351-07-02A	EA	PLATE/SWITCH - 1 GANG - CHROME - GENERATOR SWITCH
13	061424-01-000	EA	LIGHT - AISLE - 12 VOLT - RECTANGULAR
14*	137417-02-01A	EA	LIGHT - DOME - SINGLE - W/SWITCH/OPTIC LENS - WHITE

***COMPONENT PARTS LISTED LATER IN THIS GROUP**

COPYRIGHT © 2006 WINNEBAGO INDUSTRIES INC.

ELECTRICAL GROUP (CONTINUED)

12V BODY WIRING (CONTINUED)

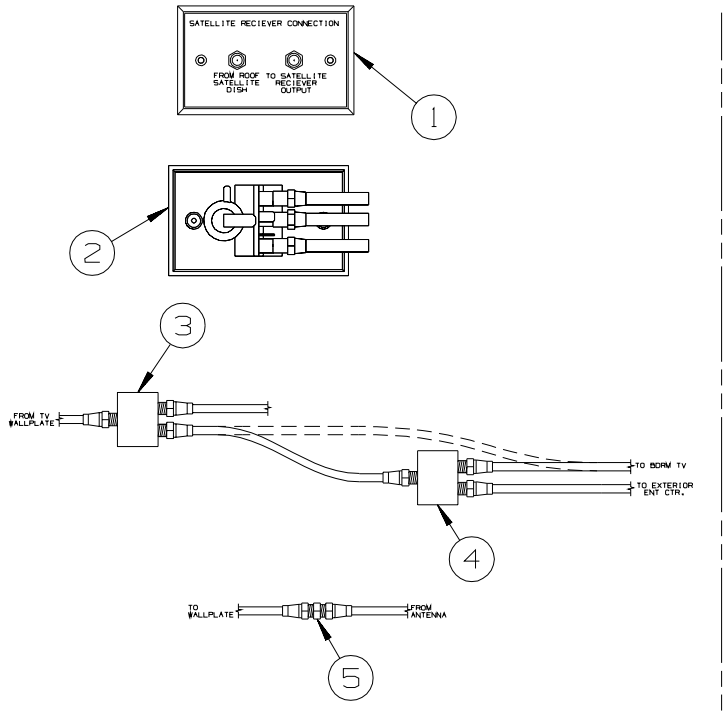

DETAIL CA

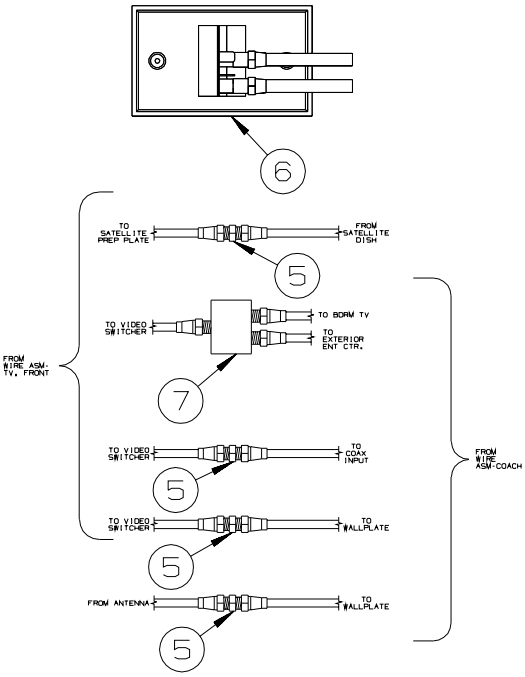

TV-24" COLOR, STEREO W/ REMOTE

KEY	PART NUMBER	U/M	DESCRIPTION
1	149557-05-01A	EA	PLATE/WALL - DUAL COAXIAL/HORIZONTAL - WHITE
2	086777-02-000	EA	WALLPLATE/TV CABLE W/ANTENNA SWITCH/BOOSTER - 2 TV - BLACK
3	086756-01-000	EA	SPLITTER - TV/2 WAY
4	086756-01-000	EA	SPLITTER - TV/2 WAY - ENTERTAINMENT CENTR/EXT W/CD
5	082134-01-000	EA	ADAPTER - TV - CABLE TO CABLE
6	086777-06-000	EA	WALLPLATE/TV CABLE - W/ANT. BOOSTER/1 OUTPUT-BLACK
7	086756-01-000	EA	SPLITTER - TV/2 WAY - ENTERTAINMENT CENTR/EXT W/CD
7	082134-01-000	EA	ADAPTER - TV - CABLE TO CABLE

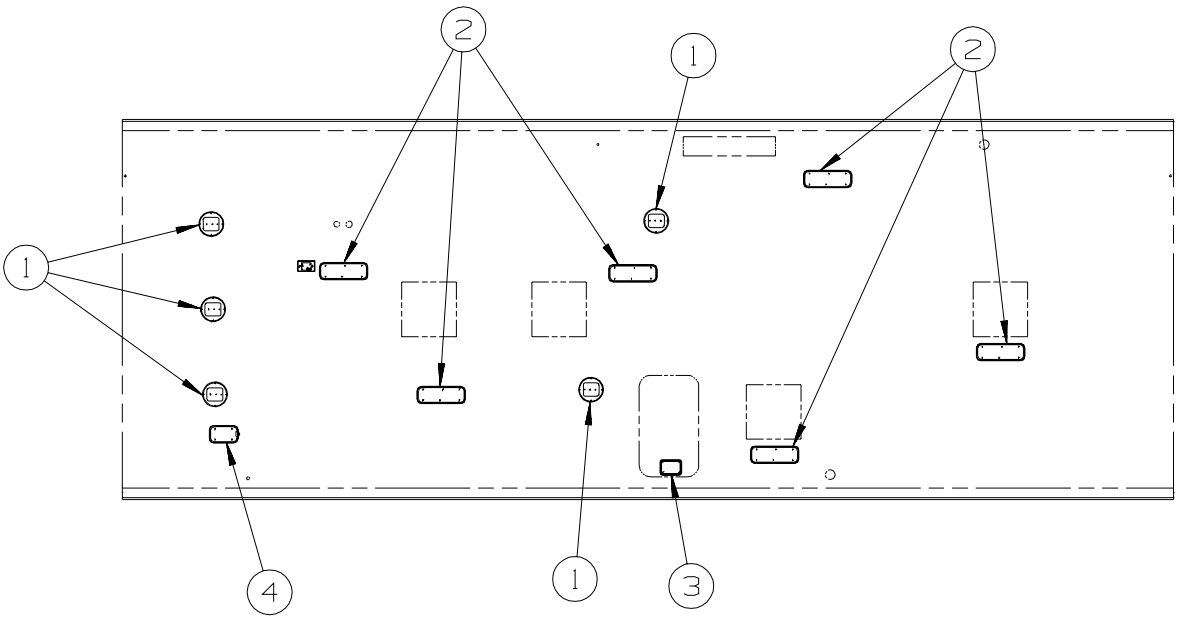

KEY	PART NUMBER	U/M	DESCRIPTION
1	151314-01-01A	EA	SPEAKER - CUBE/CEILING - WHITE - MAGNADYNE - LS3CM-WN - HOME THEATER SOUND SYSTEM
2*	137417-06-01A	EA	LIGHT - DOME - DOUBLE - W/O SWITCH - W/FROSTED LENS-WHITE
3*	121935-01-01A	EA	LIGHT - DOME - SHOWER
4*	137417-01-01A	EA	LIGHT - DOME - SINGLE - W/SWITCH/FROSTED LENS - WHITE

***COMPONENT PARTS LISTED LATER IN THIS GROUP**

COPYRIGHT © 2006 WINNEBAGO INDUSTRIES INC.

ELECTRICAL GROUP (CONTINUED)

12V BODY WIRING (CONTINUED)

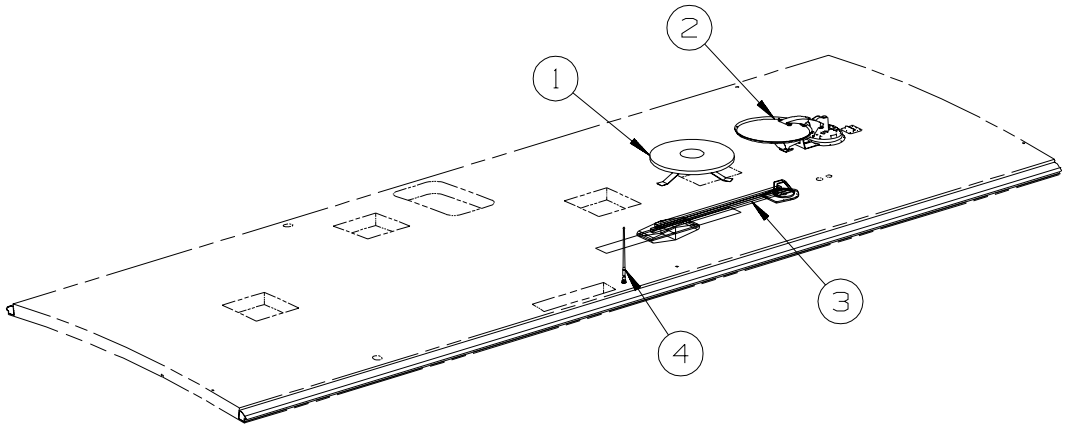

KEY	PART NUMBER	U/M	DESCRIPTION
1	132935-01-000	EA	ANTENNA - TV ROOF MOUNT - ROUND - W/O POWER SUPPLY
1	146488-01-000	EA	PLATE - ROOF - CABLE ENTRY
2*	137135-02-000	EA	ANTENNA - SATELLITE DSS - W/SENSOR
3*	076319-23-000	EA	ANTENNA - TV ROOF MOUNT - 44.5" MAST
3*	076319-25-000	EA	KIT - HARDWARE INTERIOR
3	069726-02-000	EA	BUMPER - .88" OD X .40" THICK - BLACK
4	090944-01-000	EA	ANTENNA - RADIO - 16" RUBBER - W/72" LEAD WIRE
4	109889-04-000	EA	EXTENDER - ANTENNA SHAFT - 3.7"
4	147741-01-09B	EA	BRACKET - ANTENNA GROUND - GALVANIZED

***COMPONENT PARTS LISTED LATER IN THIS GROUP**

COPYRIGHT © 2006 WINNEBAGO INDUSTRIES INC.

ELECTRICAL GROUP (CONTINUED)

12V BODY WIRING (CONTINUED)

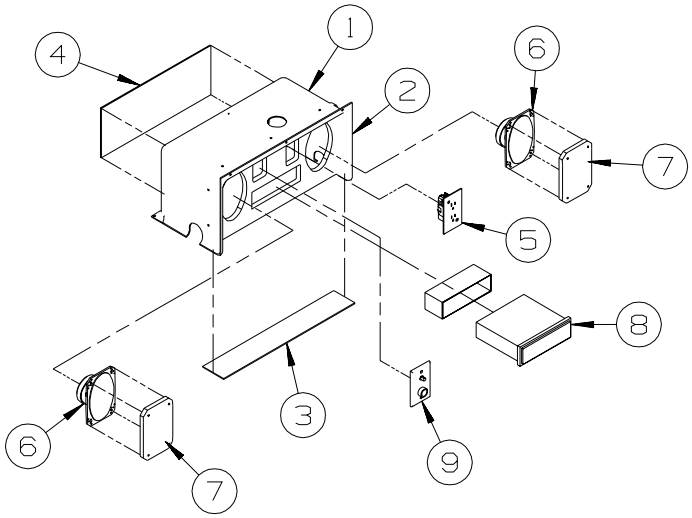

EXTERIOR ENTERTAINMENT 322E, 322R, 331C/SC 331K

KEY	PART NUMBER	U/M	DESCRIPTION
1	124696-01-01A	EA	BOX-ENTERTAINMENT CTR/EXT-19.4"W X 10"H X 10.2"D W/CUTOUTS
2	127409-02-L15	EA	PLATE - RADIO MOUNTING
3	104898-01-02A	EA	PLATE - PLASTIC BOTTOM - BRIGHT WHITE
4	104898-02-02A	EA	PLATE - PLASTIC BACK - BRIGHT WHITE
5	058708-01-000	EA	RECEPTACLE - ELECTRIC - DOUBLE - BROWN
6	110469-01-000	EA	SPEAKER - 4" X 6" OVAL - COAXIAL
7	110470-01-01A	EA	GRILLE - 4" X 6" - OVAL SPEAKER - BLACK
8*	148231-01-000	EA	RADIO - AM/FM CD - W/REMOTE - MAGNADYNE M3100CD FROM: 00-00-00 THRU: 04-11-05
8*	155619-01-000	EA	RADIO - AM/FM CD - W/REMOTE - MAGNADYNE M3200CD FROM: 04-12-05 THRU: 99-99-99
9	076319-09-000	EA	WALLPLATE - TV CABLE RECEPTACLE - SINGLE - BROWN

***COMPONENT PARTS LISTED LATER IN THIS GROUP**

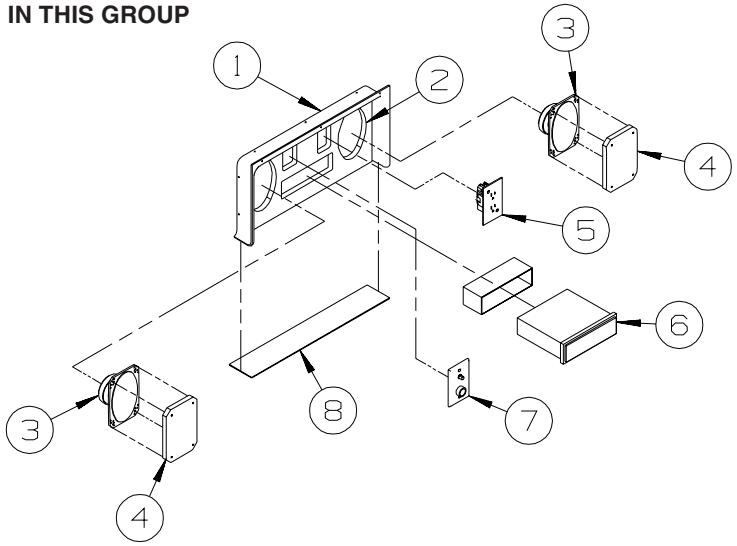

EXTERIOR ENTERTAINMENT 324V, 325F, 326A, 327L, 329B/SB, 329K, 332G

KEY	PART NUMBER	U/M	DESCRIPTION
1	124696-02-01A	EA	BOX-ENTERTAINMENT CTR/EXT-19.4"W X 10"H X 2.5"D - BRT WHT
	124696-01-01A	EA	BOX-ENTERTAINMENT CTR/EXT-19.4"W X 10"H X 10.2"D W/CUTOUTS
2	127409-02-L15	EA	PLATE - RADIO MOUNTING
3	110469-01-000	EA	SPEAKER - 4" X 6" OVAL - COAXIAL
4	110470-01-01A	EA	GRILLE - 4" X 6" - OVAL SPEAKER - BLACK
5	058708-01-000	EA	RECEPTACLE - ELECTRIC - DOUBLE - BROWN
6*	148231-01-000	EA	RADIO - AM/FM CD - W/REMOTE - MAGNADYNE M3100CD FROM: 00-00-00 THRU: 04-11-05
6*	155619-01-000	EA	RADIO - AM/FM CD - W/REMOTE - MAGNADYNE M3200CD FROM: 04-12-05 THRU: 99-99-99
7	076319-09-000	EA	WALLPLATE - TV CABLE RECEPTACLE - SINGLE - BROWN
8	104898-01-02A	EA	PLATE - PLASTIC BOTTOM - BRIGHT WHITE

***COMPONENT PARTS LISTED LATER IN THIS GROUP**

COPYRIGHT © 2006 WINNEBAGO INDUSTRIES INC.

ELECTRICAL GROUP (CONTINUED)

EXTERIOR LAMPS

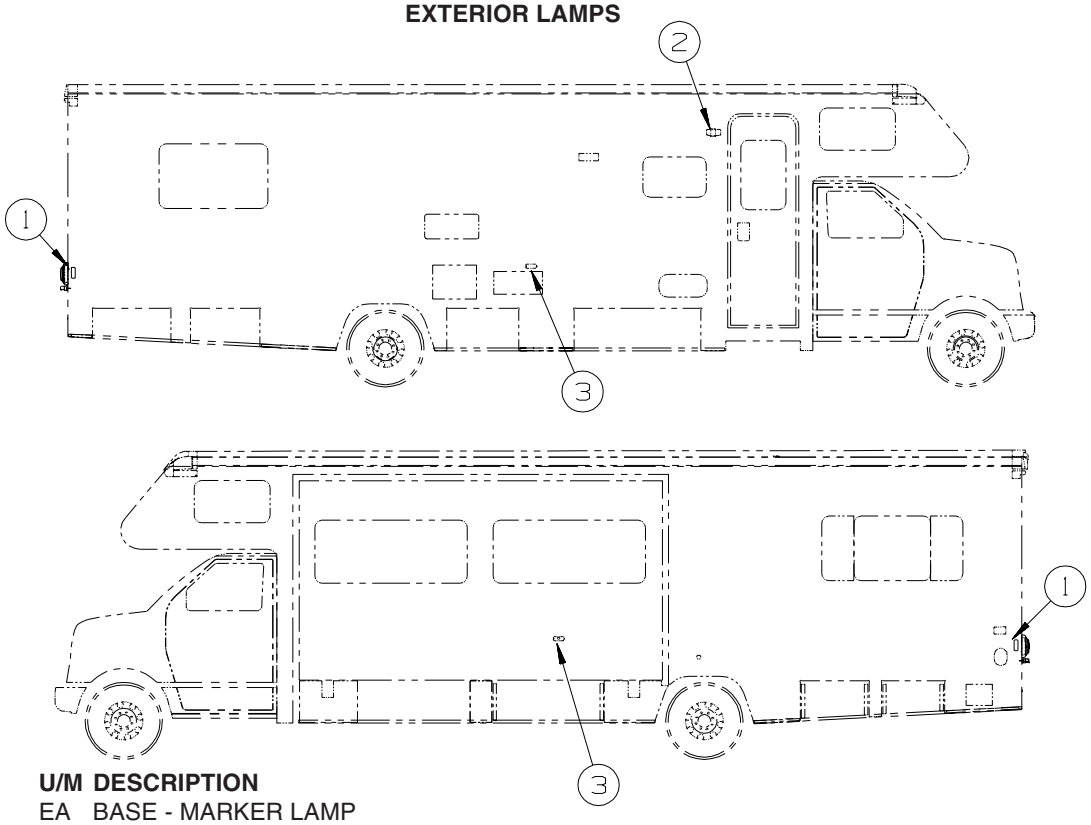

KEY	PART NUMBER	U/M	DESCRIPTION
1	111102-01-000	EA	BASE - MARKER LAMP
	036196-01-000	EA	BULB - 12V - #194 - .27 AMP - BAYONETTE
1	111102-03-000	EA	LENS - RED - MARKER LAMP
2*	097917-01-06A	EA	LIGHT - PORCH - BRIGHT WHITE
	008215-01-000	EA	BULB - 12 VOLT - #1003 - .94 AMP
3	111102-01-000	EA	BASE - MARKER LAMP
	036196-01-000	EA	BULB - 12V - #194 - .27 AMP - BAYONETTE
3	111102-02-000	EA	LENS - AMBER - MARKER LAMP

***COMPONENT PARTS LISTED LATER IN THIS GROUP**

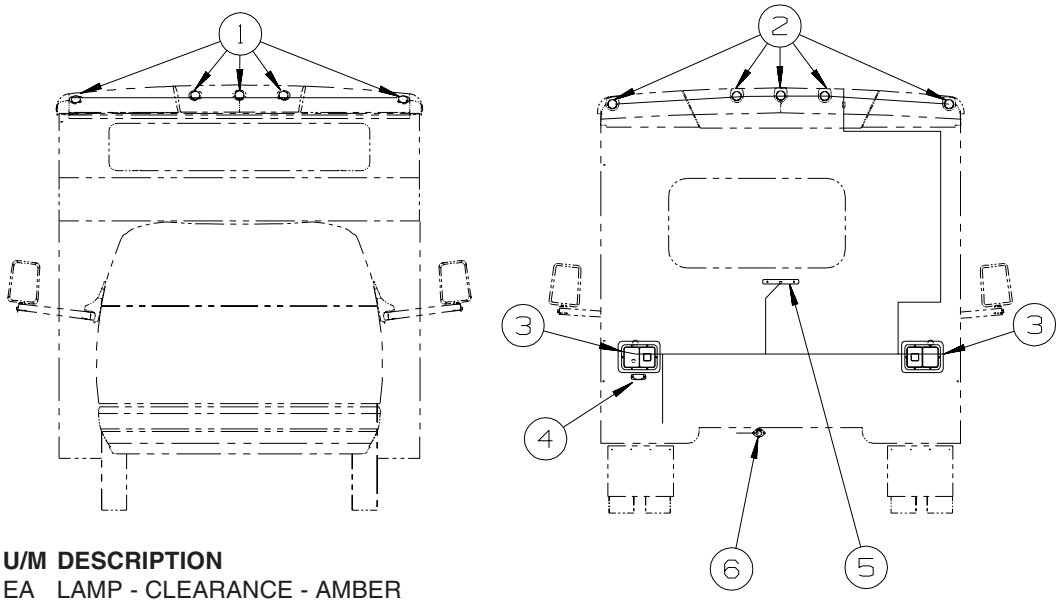

KEY	PART NUMBER	U/M	DESCRIPTION
1	138996-01-000	EA	LAMP - CLEARANCE - AMBER
1	138996-03-000	EA	BRACKET - CLEARANCE LIGHT
2	138996-02-000	EA	LAMP - CLEARANCE - RED
2	138996-03-000	EA	BRACKET - CLEARANCE LIGHT
3	153658-01-01A	EA	LAMP - STOP/TURN/TAIL/BACK UP - BRIGHT WHITE
4	066432-02-000	EA	LIGHT - LICENSE - BLACK
4	066432-03-000	EA	BRACKET - LICENSE PLATE
5	136916-01-000	EA	LIGHT - BRAKE - CENTER MOUNT - RECTANGLE - 1.3” X 9.8”
6	146246-01-000	EA	CONNECTOR/PLUG - TRAILER - 7 PIN
6	151080-01-000	EA	CONNECTOR - PLUG - TRAILER - 7 SOCKET

COPYRIGHT © 2006 WINNEBAGO INDUSTRIES INC.

ELECTRICAL GROUP (CONTINUED)

FRONT END

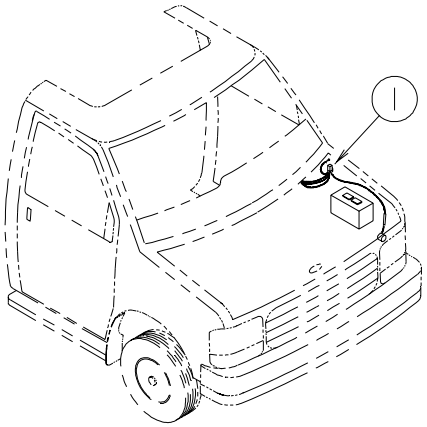

KEY	PART NUMBER	U/M	DESCRIPTION
1	100138-01-000	EA	MODULE - DAYTIME/RUNNING LIGHT - HAMSAR DRL #H8005B

DRIVERS DOOR

KEY	PART NUMBER	U/M	DESCRIPTION
*	120269-07-01A	EA	PANEL - W/ELECTRIC MIRROR/HEAT SWITCH - F/#L28X OPTION - MIRRORS-EXTERIOR W/DEFROST
*	133908-09-01A	EA	PANEL - F/ELECTRIC MIRROR ONLY - L28X OPTION - MIRRORS-EXTERIOR W/DEFROST - CHEVY

***COMPONENT PARTS LISTED LATER IN THIS GROUP**

COPYRIGHT © 2006 WINNEBAGO INDUSTRIES INC.

ELECTRICAL GROUP (CONTINUED)

FRONT TV/VCR

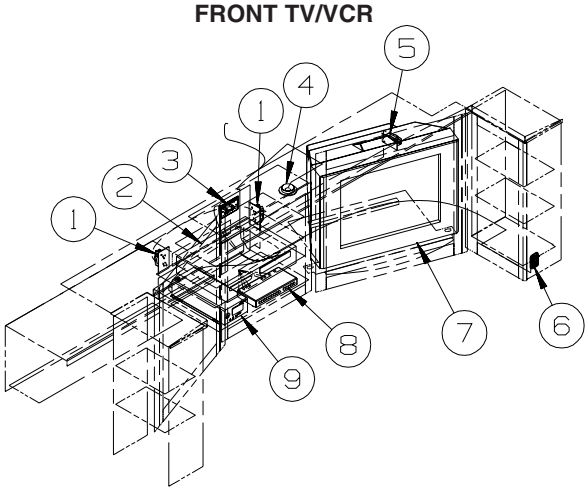

KEY	PART NUMBER	U/M	DESCRIPTION
1	156676-01-000	EA	CONTROLLER/OUTLET - POWER/TV - AUTO SHUTOFF W/IGNITION
			FROM: 08-29-05 THRU: 99-99-99
	158542-02-01A	EA	LABEL - RECEPTACLE - ELECTRONICS - WHITE/BLACK - CANADIAN
			FROM: 12-01-05 THRU: 99-99-99
2*	150089-01-000	EA	DVD/VCR - HOME THEATER SYSTEM - RCA RTD300/SP - HOME THEATER SOUND SYSTEM
2*	145641-04-000	EA	DVD/VCR PLAYER - RCA DRC6300N - DVD/VCR,STEREO,W/REMOTE
			FROM: 00-00-00 THRU: 10-09-05
2	145641-05-000	EA	DVD/VCR PLAYER - RCA DRC6350N - DVD/VCR,STEREO,W/REMOTE
			FROM: 10-10-05 THRU: 99-99-99
3	149557-05-01A	EA	PLATE/WALL - DUAL COAXIAL/HORIZONTAL - WHITE
	134250-01-01A	EA	LABEL - SATELLITE RECEIVER - BLACK/CLEAR
4*	123775-01-02A	EA	LIGHT - HALOGEN - ROUND - SATIN NICKEL
5	058707-02-000	EA	RECEPTACLE - BLANK - JUNCTION BOX
6	135740-01-01A	EA	SWITCH - ROCKER - SPST - ON/OFF - BROWN
6	135741-01-01A	EA	SWITCH - BASE - SINGLE - BROWN
6	135742-07-02A	EA	BEZEL - SWITCH - CEILING - BROWN
7*	152441-01-000	EA	TV - 24" - STEREO/3 JACKS - RCA 24V511T
			FROM: 00-00-00 THRU: 11-30-05
7	152441-02-000	EA	TV - 24" - STEREO/3 JACKS - RCA 24V412T
			FROM: 12-01-05 THRU: 99-99-99
8	086757-04-000	EA	CONTROL CENTER - SWITCH - VCR/TV - 5 INPUTS
9	099048-04-000	EA	INVERTER - 300 WATT

***COMPONENT PARTS LISTED LATER IN THIS GROUP**

COPYRIGHT © 2006 WINNEBAGO INDUSTRIES INC.

ELECTRICAL GROUP (CONTINUED)

SIDE TV/VCR

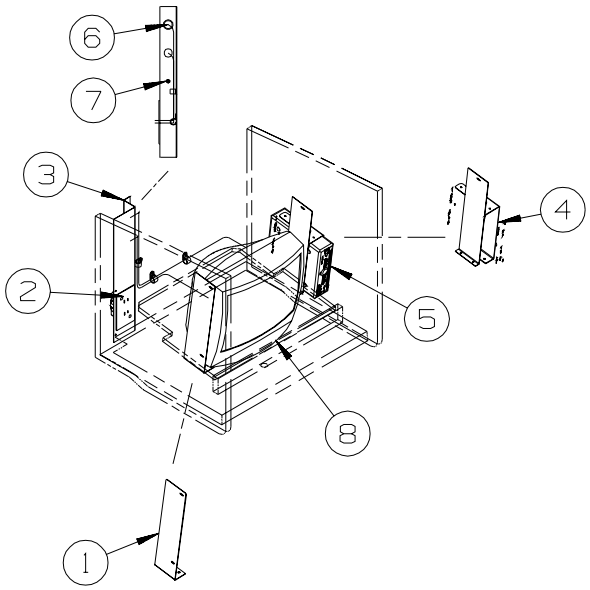

322E, 322R, 324V, 325F, 326A, 327L, 329B/SB, 329K, 332G

KEY	PART NUMBER	U/M	DESCRIPTION
1	143650-01-02B	EA	BRACKET - TV - E-COATED
2	058708-01-000	EA	RECEPTACLE - ELECTRIC - DOUBLE - BROWN
3	122469-01-02B	EA	BRACKET - ZEE - 13” TV W/DVD-12V
3	122469-02-02B	EA	BRACKET - ZEE - W/CUTOUT - E-COATED
4	143676-03-02B	EA	BRACKET - DVD - E-COATED
			FROM: 00-00-00 THRU: 05-08-05
4	143676-04-02B	EA	BRACKET - DVD - E-COATED
			FROM: 05-09-05 THRU: 03-19-06
4	159773-01-02B	EA	BRACKET - DVD - E-COATED
			FROM: 03-20-06 THRU: 99-99-99
5*	149925-01-000	EA	DVD PLAYER - SLOT-IN - AUDIOVOX AVD300
			FROM: 00-00-00 THRU: 05-08-05
5*	156130-01-000	EA	DVD PLAYER - SLOT-IN - AUDIOVOX - AVD301
			FROM: 05-09-05 THRU: 01-01-06
5	158778-02-000	EA	DVD PLAYER - VERTICAL MOUNT - 12V - JENSEN - DV352VMWIN
			FROM: 01-02-06 THRU: 03-19-06
5*	158778-01-000	EA	DVD PLAYER - SLOT-IN - 12V - JENSEN - DV352WIN
			FROM: 03-20-06 THRU: 99-99-99
6	111414-01-000	EA	RECEPTACLE/SOCKET - 12 VOLT
7	082134-01-000	EA	ADAPTER - TV - CABLE TO CABLE
	082136-01-000	EA	NUT - HEX JAM - 3/8-32
8*	086231-10-000	EA	TV - 13" COLOR - AUDIOVOX - FLEX VISION/AVT-1498/DC

***COMPONENT PARTS LISTED LATER IN THIS GROUP**

COPYRIGHT © 2006 WINNEBAGO INDUSTRIES INC.

ELECTRICAL GROUP (CONTINUED)
SIDE TV/VCR (CONTINUED)

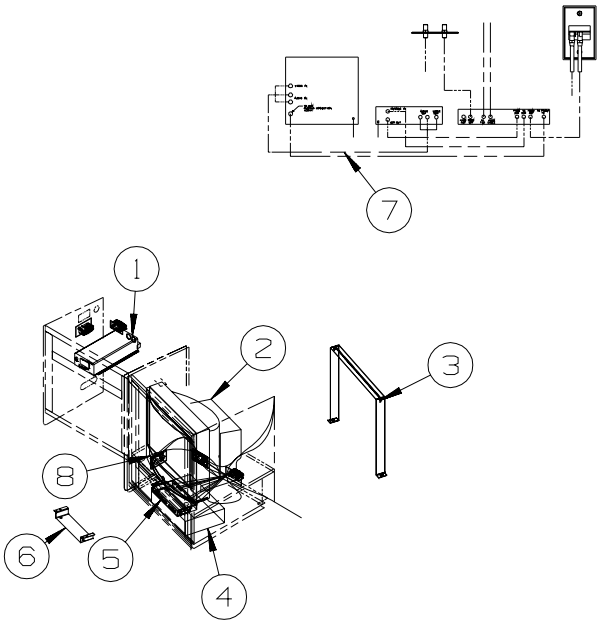

331C/SC
331K

KEY	PART NUMBER	U/M	DESCRIPTION
1	099048-04-000	EA	INVERTER - 300 WATT
2*	149040-02-000	EA	TV - 20" FLAT SCREEN/STEREO - RCA 20F410T - TV-20" W/VIDEO SELECTION SYS FROM: 00-00-00 THRU: 05-16-06
2	149040-03-000	EA	TV - 20" FLAT SCREEN/STEREO - RCA 20F420T - TV-20" W/VIDEO SELECTION SYS FROM: 05-15-06 THRU: 10-09-05
3	148247-05-02B	EA	STRAP/TIEDOWN - TV - E-COATED
4*	145641-04-000	EA	DVD/VCR PLAYER - RCA DRC6300N - DVD/VCR STEREO FROM: 00-00-00 THRU: 10-09-05
4	145641-05-000	EA	DVD/VCR PLAYER - RCA DRC6350N - DVD/VCR STEREO FROM: 10-10-05 THRU: 99-99-99
5	086757-04-000	EA	CONTROL CENTER - SWITCH - VCR/TV - 5 INPUTS
6	118847-02-02B	EA	MOUNT - SWITCH BOX - E-COATED
7	136860-01-000	EA	CABLE - RCA - #3 MALE TO #12F MALE CONNECTOR - DVD/VCR STEREO
8	086777-06-000	EA	WALLPLATE/TV CABLE - W/ANTENNA BOOSTER/1 OUTPUT - BLACK

***COMPONENT PARTS LISTED LATER IN THIS GROUP**

COPYRIGHT © 2006 WINNEBAGO INDUSTRIES INC.

ELECTRICAL GROUP (CONTINUED)

COMPONENT PARTS FOR WIRING

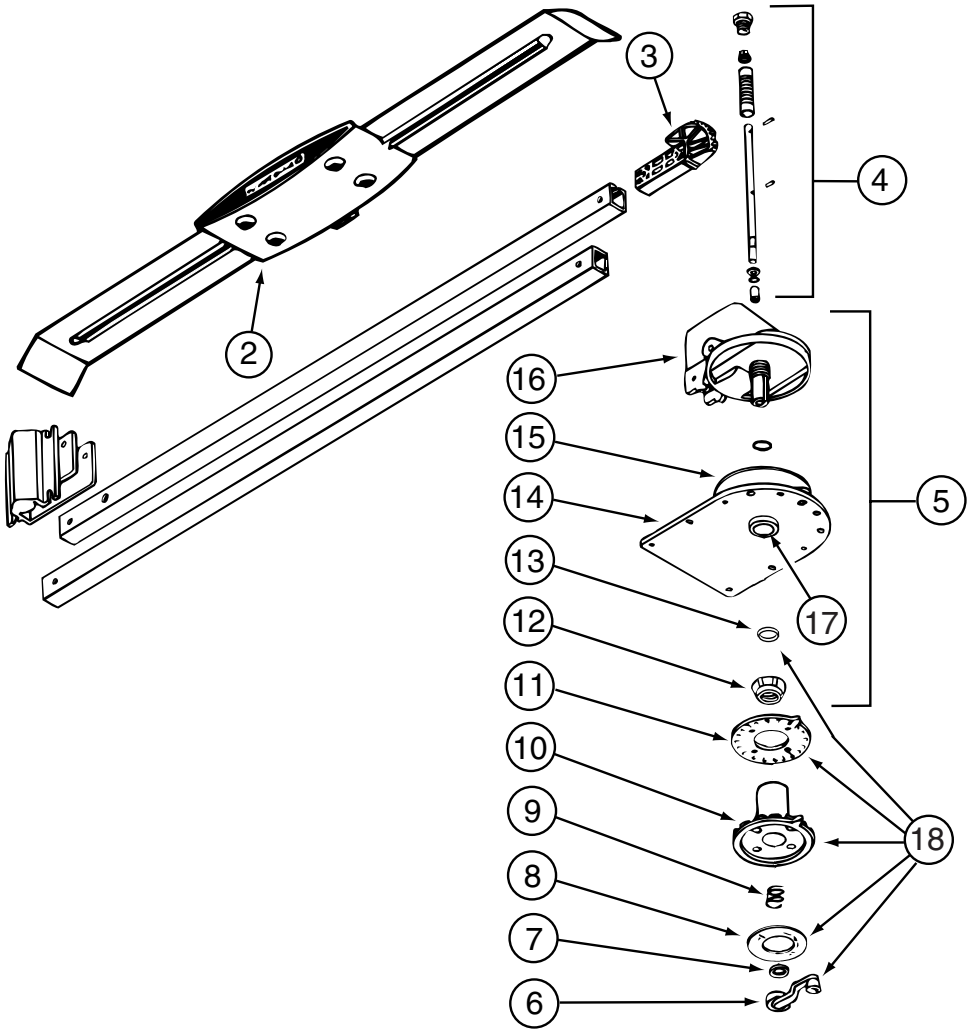

076319-23-000

KEY	PART NUMBER	U/M	DESCRIPTION	VENDOR NO.
2	076319-01-700	EA	HEAD-ANTENNA, AMPLIFIED	RVSA U/V
3	076319-01-701	EA	GEAR-ELEVATING, PLASTIC	2200046
4	076319-01-702	EA	SHAFT ASM-ELEVATING	RP-4000
5	076319-01-711	EA	BASE & LIFT ASM	2762802
7	076319-01-705	EA	GROMMET-NYLON, 7/8"ID	3200658
8	076319-01-708	EA	DECAL-CRANK	5413002
9	076319-01-707	EA	SPRING-HANDLE	2160822
11	076319-01-712	EA	PLATE - CEILING	3200608
12	076319-01-715	EA	NUT (GEAR HOUSING)	2200047
14	076319-01-713	EA	PLATE-BASE, STEEL	3100523
15	076319-01-703	EA	BEARING-NYLON, 5"OD	3200656
16	076319-01-714	EA	HOUSING, ROTATING GEAR	2200049
17	076319-01-704	EA	BEARING-NYLON, 1.25"OD	3200657
18	076319-01-709	EA	HANDLE-HEAD DIRECTIONAL	200644
	076319-01-716	EA	TUBING, ELEVATING	RP-2900
			CONTACT WINNEBAGO PART SALES FOR UNLISTED COMPONENT(S)	

076319-25-000

KEY	PART NUMBER	U/M	DESCRIPTION	VENDOR NO.
6	076319-01-706	EA	CRANK-W/SET SCREW UNIV/BEIGE	2750897
6	120233-01-710	EA	HANDLE-CRANK W/SCREW - WHITE	RP-6795
8	076319-01-708	EA	DECAL-CRANK	5413002
10	076319-25-700	EA	DIRECTIONAL HANDLE(WHITE)	3200612
11	076319-25-701	EA	PLATE - CEILING(WHITE)	3200609
13	120233-01-709	EA	WASHER-NYLON	RP-2658
			CONTACT WINNEBAGO PART SALES FOR UNLISTED COMPONENT(S)	

COPYRIGHT © 2006 WINNEBAGO INDUSTRIES INC.

ELECTRICAL GROUP (CONTINUED)

COMPONENT PARTS FOR WIRING (CONTINUED)

083208-06-000

KEY	PART NUMBER	U/M	DESCRIPTION	VENDOR NO.
	083208-06-700	EA	DOOR W/LABEL	M7345DOOR
	083208-06-701	EA	CONVERTER ONLY (LOWER UNIT)	7345R

083208-07-000

KEY	PART NUMBER	U/M	DESCRIPTION	VENDOR NO.
	083208-06-701	EA	CONVERTER ONLY (LOWER UNIT)	7345R

086231-10-000

KEY	PART NUMBER	U/M	DESCRIPTION	VENDOR NO.
	086231-08-700	EA	REMOTE-UNIVERSAL	0892325
	086231-10-700	EA	ADAPTER WIRE - (CIGARETTE)	0894000
	086231-10-701	EA	CONVERTER/POWER SUP 110/12 V	0891412

087694-01-000

KEY	PART NUMBER	U/M	DESCRIPTION	VENDOR NO.
	087694-01-700	EA	BULB	GE561

097917-01-06A

KEY	PART NUMBER	U/M	DESCRIPTION	VENDOR NO.
	097917-01-700	EA	LENS-LIGHT, CLEAR	30-78-021

108354-01-01A

KEY	PART NUMBER	U/M	DESCRIPTION	VENDOR NO.
	108354-01-700	EA	BULB-COURTESY LIGHT	395-B

120269-07-01A

KEY	PART NUMBER	U/M	DESCRIPTION	VENDOR NO.
	120269-07-700	EA	SWITCH - REMOTE	7475720
	133908-09-700	EA	SWITCH - MIRROR HEATER	7475150

121935-01-01A

KEY	PART NUMBER	U/M	DESCRIPTION	VENDOR NO.
	121935-01-700	EA	LENS ONLY	809511

123775-01-01A

KEY	PART NUMBER	U/M	DESCRIPTION	VENDOR NO
	123775-01-700	EA	BULB - 10 WATT - HALOGEN	71-JC10
	123775-01-701	EA	BEZEL/LENS - RECESSED LIGHT	99 BEZEL/LENS-BRASS

123775-01-02A

KEY	PART NUMBER	U/M	DESCRIPTION	VENDOR NO
	123775-01-702	EA	BEZEL/LENS - SATIN NICKEL	99 953470

133908-09-01A

KEY	PART NUMBER	U/M	DESCRIPTION	VENDOR NO.
	133908-09-700	EA	SWITCH-MIRROR HEATER	7475150

COPYRIGHT © 2006 WINNEBAGO INDUSTRIES INC.

ELECTRICAL GROUP (CONTINUED)

COMPONENT PARTS FOR WIRING (CONTINUED)

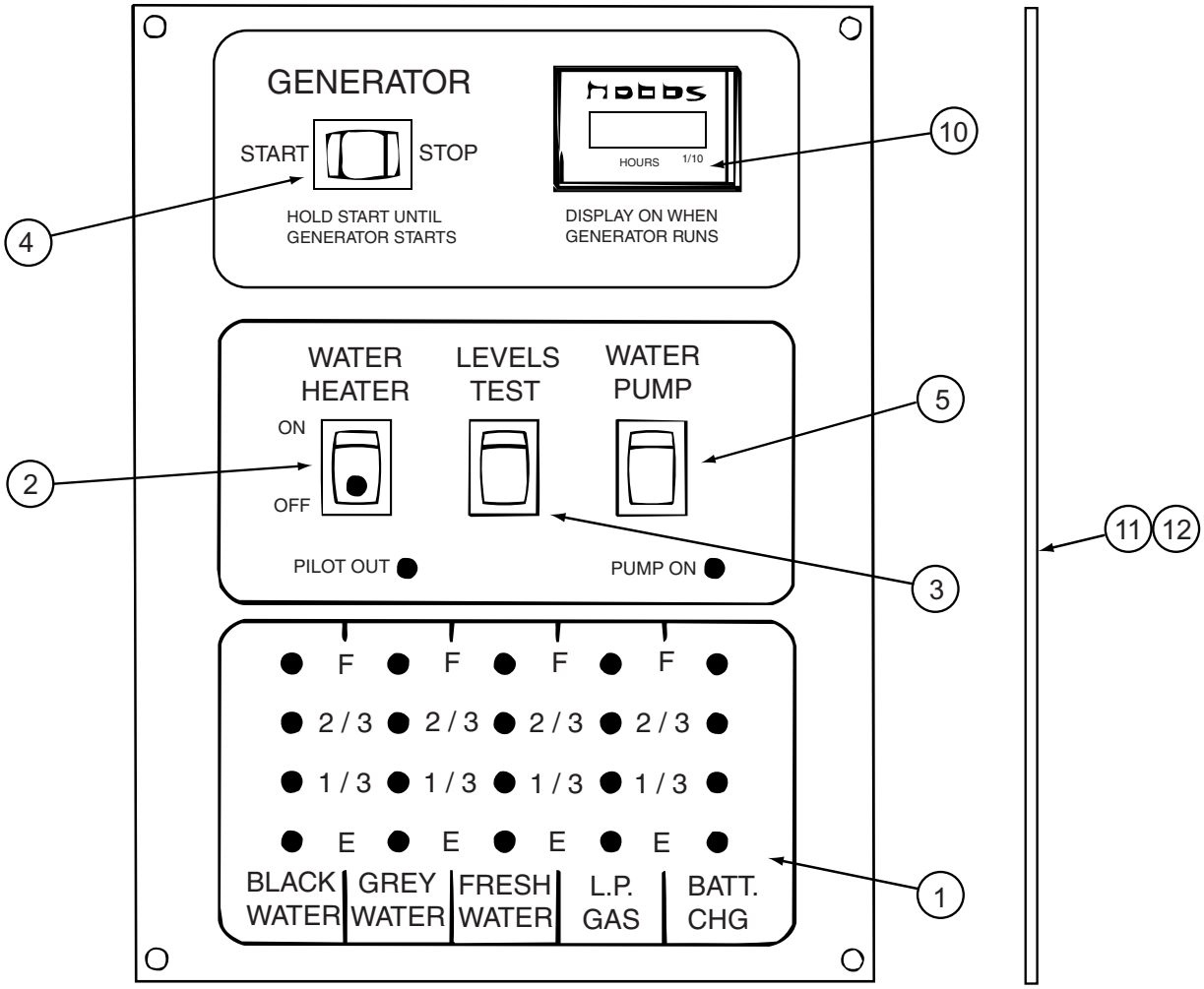

134940-06-01A

KEY	PART NUMBER	U/M	DESCRIPTION	VENDOR NO.
1	134940-01-702	EA	CHASSIS - SILKSCREENED	CC0558-00
2	134940-01-701	EA	SWITCH-SPST/ON-OFF/BLK W/LGT	L0109
3	096983-01-701	EA	SWITCH - SPST/MOM 2 TERMINAL	L0111-00
4	096983-01-702	EA	SWITCH - MOM/OFF/MOM/3 TERM	L0112-00
5	096983-01-703	EA	SWITCH - ON/ON	L0115-00
10	100258-10-701	EA	GAUGE-HR METER ONLY (LCD)	L0775-00
11	134940-06-700	EA	PC BOARD - SENSOR SYSTEM/RED	L5131-02
			CONTACT WINNEBAGO PART SALES FOR UNLISTED COMPONENT(S)	

134940-07-01A

KEY	PART NUMBER	U/M	DESCRIPTION	VENDOR NO.
1	134940-01-702	EA	CHASSIS - SILKSCREENED	CC0558-00
2	134940-01-701	EA	SWITCH-SPST/ON-OFF/BLK W/LGT	L0109
3	096983-01-701	EA	SWITCH - SPST/MOM 2 TERMINAL	L0111-00
4	096983-01-703	EA	SWITCH - ON/ON	L0115-00
5	134940-02-700	EA	SWITCH - DUMMY	L0118
11	134940-06-700	EA	PC BOARD - SENSOR SYSTEM/RED	L5131-02
			CONTACT WINNEBAGO PART SALES FOR UNLISTED COMPONENT(S)	

COPYRIGHT © 2006 WINNEBAGO INDUSTRIES INC.

ELECTRICAL GROUP (CONTINUED)

COMPONENT PARTS FOR WIRING (CONTINUED)

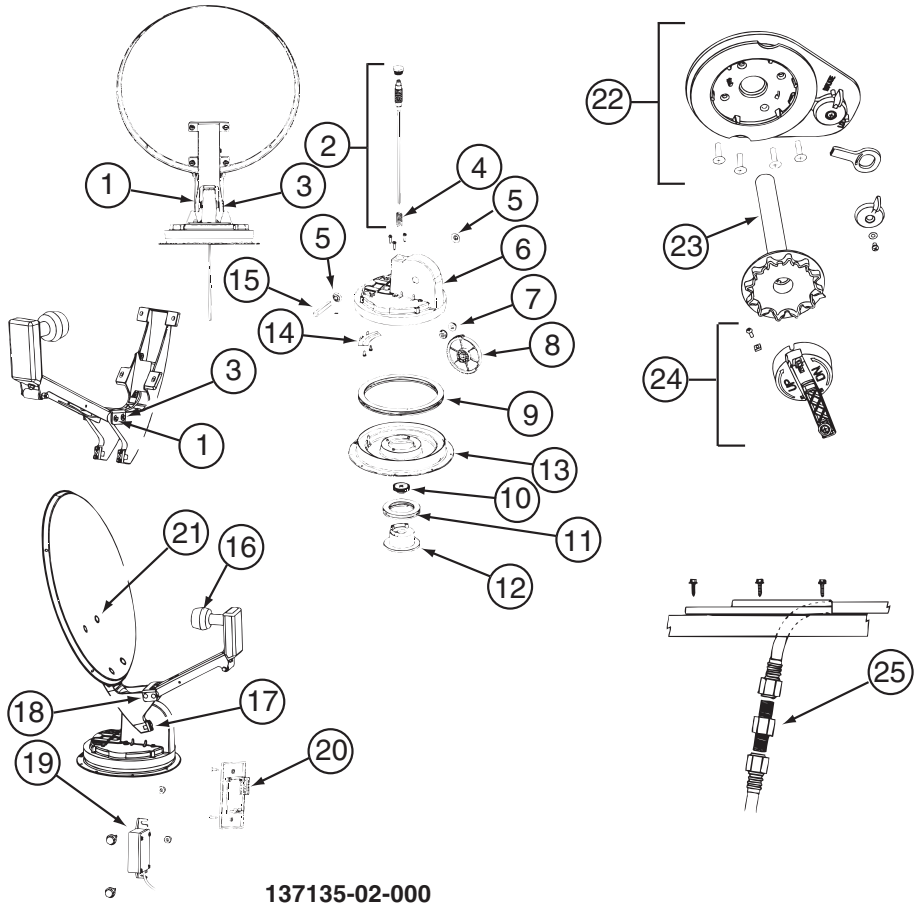

137135-02-000

KEY	PART NUMBER	U/M	DESCRIPTION	VENDOR NO.
1	120233-01-714	EA	CLIP-E	5160818
2	137135-01-703	EA	KIT ELEV - SHAFT/GEAR/SPRING	RP-4400
3	137135-01-704	EA	PIN - 1/4" X 3.25"	2160813
4	137135-01-705	EA	SPRING	2160818
5	137135-01-707	EA	SEAL - PIVOT SHAFT	2200852
6	137135-01-708	EA	TURRET	3100728
7	137135-01-709	EA	PIVOT BEARING	2200470
8	137135-01-711	EA	GEAR - ELEVATING	2200464
9	137135-01-712	EA	BEARING - OUTER	2590347
10	137135-01-714	EA	GEAR - ELEVATING SHAFT	2200465
11	137135-01-715	EA	BEARING - INNER	2590348
12	137135-01-716	EA	HUB	3100731
13	137135-01-713	EA	TURRET BASE	3100730
14	137135-01-710	EA	PLATE - ROTATE LIMIT	3720052
16	137135-02-703	EA	LOW NOISE BLOCK FILTER	LB-6000 - DUAL
17	137135-01-722	EA	CLAMP	2590343
18	137135-01-719	EA	BRACKET - PIVOT	2744945
19	137135-01-720	EA	DE-SENSOR UNIT W/43" CABLE	DM4000
20	137135-02-701	EA	BOX - SURFACE MOUNT	SM-100
21	137135-01-717	EA	BOLT - FLAT HEAD	2160362
22	120233-01-737	EA	PLATE/INT-W/DIRECTIONAL HDLE	RK-CEIL
23	120233-01-704	EA	DIAL/DIRECTIONAL 4"W/SPRING	3200364
24	120233-01-738	EA	HDW PKG-HANDLE/SPRING/WASHER	RK-HAND
25	137135-01-701	EA	CONNECTOR - F - MALE TO MALE	FS-8100
	120233-04-700	EA	KIT-WALL PLATE/CABLE - GRAY	DM4000
	137135-01-700	EA	ROOF WEDGE W/GASKET	RW-5000
	137135-01-706	EA	KIT-TURRET/SEAL/BEARING/GEAR	RP-RM30
	137135-01-718	EA	REFLECTOR/WHITE-46CM W/HDW	RP-35RM
	137135-02-700	EA	DE-SENSOR	2780096
	137135-02-704	EA	KIT-UPDATE DIRECTIONAL HDL	RP-RMDH
	137135-02-705	EA	KIT-TURRET & SHAFT COMPLETE	RP-RM46

CONTACT WINNEBAGO PART SALES FOR UNLISTED COMPONENT(S)

COPYRIGHT © 2006 WINNEBAGO INDUSTRIES INC.

ELECTRICAL GROUP (CONTINUED)

COMPONENT PARTS FOR WIRING (CONTINUED)

137417-01-01A, 137417-03-01A

KEY	PART NUMBER	U/M	DESCRIPTION	VENDOR NO.
	137417-01-700	EA	LENS - SINGLE (FROSTED)	810868

137417-02-01A

KEY	PART NUMBER	U/M	DESCRIPTION	VENDOR NO.
	137417-02-700	EA	LENS - SINGLE OPTIC	810844

137417-05-01A

KEY	PART NUMBER	U/M	DESCRIPTION	VENDOR NO.
	137417-05-700	EA	LENS - DOUBLE OPTIC	810845

137417-06-01A

KEY	PART NUMBER	U/M	DESCRIPTION	VENDOR NO.
	137417-06-700	EA	LENS - DOUBLE WHITE	810867

145641-04-000

KEY	PART NUMBER	U/M	DESCRIPTION	VENDOR NO.
	145641-02-700	EA	REMOTE	260607

148231-01-000

KEY	PART NUMBER	U/M	DESCRIPTION	VENDOR NO.
	148231-01-700	EA	REMOTE	RC3100

149040-02-000

KEY	PART NUMBER	U/M	DESCRIPTION	VENDOR NO.
	149040-02-700	EA	REMOTE - TV	RCR311TBM1-RCA

149925-01-000

KEY	PART NUMBER	U/M	DESCRIPTION	VENDOR NO.
	149925-01-700	EA	REMOTE - F/DVD	P42MA0101

150089-01-000

KEY	PART NUMBER	U/M	DESCRIPTION	VENDOR NO.
	150089-01-700	EA	REMOTE	265683

152441-01-000

KEY	PART NUMBER	U/M	DESCRIPTION	VENDOR NO.
	152441-01-700	EA	REMOTE - TV	265714

153658-01-01A/-02A

KEY	PART NUMBER	U/M	DESCRIPTION	VENDOR NO.
	153658-01-700	EA	LENS ONLY	8511LRC

155619-01-000

KEY	PART NUMBER	U/M	DESCRIPTION	VENDOR NO.
	155619-01-700	EA	REMOTE	RC3200

156130-01-000

KEY	PART NUMBER	U/M	DESCRIPTION	VENDOR NO.
	149925-01-700	EA	REMOTE - F/DVD	P42MA0101

158778-01-000

KEY	PART NUMBER	U/M	DESCRIPTION	VENDOR NO.
	158778-01-700	EA	REMOTE	PSVCDV352

COPYRIGHT © 2006 WINNEBAGO INDUSTRIES INC.

ELECTRICAL GROUP (CONTINUED)

CIRCUIT BREAKERS, FUSES & RELAYS

KEY	PART NUMBER	U/M	DESCRIPTION
	008235-01-000	EA	FUSE - 15 AMP/12VOLT - AUTOMOTIVE
	062901-02-000	EA	FUSE - 5 AMP - AUTOMOTIVE
	062901-04-000	EA	FUSE - 10 AMP - AUTOMOTIVE
	062901-05-000	EA	FUSE - 15 AMP - AUTOMOTIVE
	062901-06-000	EA	FUSE - 20 AMP - AUTOMOTIVE
	062901-07-000	EA	FUSE - 25 AMP - AUTOMOTIVE
	062901-08-000	EA	FUSE - 30 AMP - AUTOMOTIVE
	063910-01-000	EA	HOUSING - RELAY
	063912-02-000	EA	RELAY - CANISTER - SPDT
	083209-01-000	EA	CIRCUIT BREAKER - 15 AMP - 120 VOLT - CANADIAN
	083209-02-000	EA	CIRCUIT BREAKER - 15/15 AMP - 120 VOLT
	083209-03-000	EA	CIRCUIT BREAKER - 15/20 AMP - 120 VOLT
	083209-04-000	EA	CIRCUIT BREAKER - 30 AMP - 120 VOLT
	083209-05-000	EA	CIRCUIT BREAKER - 20 AMP - 120 VOLT
	083209-06-000	EA	CIRCUIT BREAKER - 30/15 AMP - 120 VOLT
	083209-07-000	EA	CIRCUIT BREAKER - 20/20 AMP - 120 VOLT
	083209-10-000	EA	CIRCUIT BREAKER - 20/30 AMP - 120 VOLT
	083209-11-000	EA	CIRCUIT BREAKER - 20/15 AMP - 120 VOLT
	092786-01-000	EA	BUSS BAR-2.1" LONG
	092786-03-000	EA	BUSS BAR - 6.9" LONG
	092786-06-000	EA	BUSS BAR
	093654-01-000	EA	CIRCUIT BREAKER - 6 AMP - 12 VOLT - PUSH BUTTON - WHITE
	093654-02-000	EA	CIRCUIT BREAKER - 15 AMP - 12 VOLT - PUSH BUTTON - WHITE
	093654-03-000	EA	CIRCUIT BREAKER - 20 AMP - 12 VOLT - PUSH BUTTON - WHITE
	093654-11-000	EA	COVER - RESET BUTTON
	093655-01-000	EA	CIRCUIT BREAKER - 25 AMP - 12 VOLT - PUSH BUTTON - WHITE
	093655-02-000	EA	CIRCUIT BREAKER - 30 AMP - 12 VOLT - PUSH BUTTON - WHITE
	093655-03-000	EA	CIRCUIT BREAKER - 40 AMP - 12 VOLT - PUSH BUTTON - WHITE
	097611-01-000	EA	CIRCUIT BREAKER - 10 AMP
	097611-02-000	EA	CIRCUIT BREAKER - 30 AMP
	097611-03-000	EA	CIRCUIT BREAKER - 20 AMP
	100341-01-000	EA	FUSE HOLDER - IN LINE TYPE
	106656-01-000	EA	FUSE BLOCK - 4 CAVITY - AUTOFUSE
	113482-01-000	EA	CIRCUIT BREAKER - 55 AMP - MANUAL
	115187-01-000	EA	FUSE - 300 AMP - NON-DELAY
	115187-02-000	EA	HOLDER - FUSE
	115187-03-000	EA	FUSE - 60 AMP - NON-DELAY
	122811-01-000	EA	CIRCUIT BREAKER - 20/50/50/20 AMP - 250V
	125986-02-000	EA	FUSE - 5 AMP - AUTO - MINI BLADE
	125986-05-000	EA	FUSE - 15 AMP - AUTO - MINI BLADE
	141789-01-000	EA	SPACER - CIRCUIT BREAKER

COPYRIGHT © 2006 WINNEBAGO INDUSTRIES INC.

ELECTRICAL GROUP (CONTINUED)
CONVERTER, INVERTER, LOAD CENTERS

KEY	PART NUMBER	U/M	DESCRIPTION
	099048-04-000	EA	INVERTER - 300 WATT

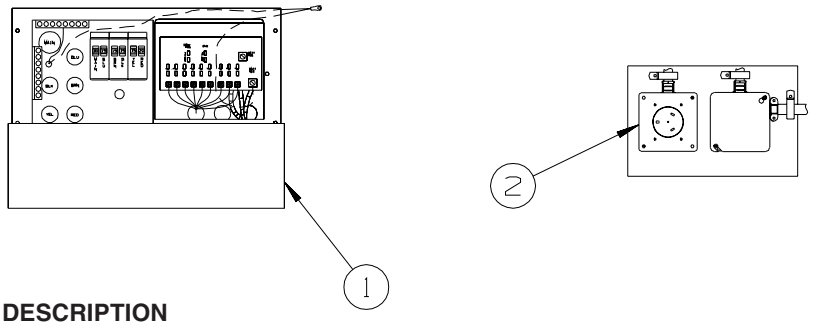

KEY	PART NUMBER	U/M	DESCRIPTION
1*	083208-06-000	EA	CONTROL CENTER - 45 AMP/120V/12V - W/O BREAKERS/ELECTRONIC FROM: 00-00-00 THRU: 01-13-05
1*	083208-07-000	EA	CONTROL CENTER - 45 AMP - 120V/12V - W/O BREAKERS FROM: 01-14-05 THRU: 99-99-99
2	024924-02-000	EA	RECEPTACLE - POWER CORD - W/PARTIAL PLATE

***COMPONENT PARTS LISTED LATER IN THIS GROUP**

COPYRIGHT © 2006 WINNEBAGO INDUSTRIES INC.

ELECTRICAL GROUP (CONTINUED)

BOXES & CORDS

KEY	PART NUMBER	U/M	DESCRIPTION
	008054-01-000	EA	CORD - POWER - 10/3 WIRE - 30 AMP - 25'
	115832-01-000	FT	CORD - HEAVY DUTY - 14-2 W/GROUND
	008289-01-000	EA	BOX - ELECTRIC/STEEL - 4" X 4" - 1/2" & 3/4" KNOCKOUTS
	091910-01-000	EA	BOX - ELECTRIC - 3.8" X 3.5" X 1.8" - PLASTIC
	091910-02-000	EA	BOX - ELECTRIC - 2.2" X 3.5" X 1.8" - PLASTIC
	107165-01-01A	EA	BOX - CIRCUIT BREAKER - 14.6" X 4" - PLASTIC
	131679-01-000	EA	BOX/ELECTRIC-WATERPROOF-4" X 4" - W/4 3/4"OUTLETS-UL/CSA
	133070-01-000	EA	BOX - ELECTRIC/PLASTIC - 3" X 2" X 2.8" - UL
	133070-02-000	EA	BOX - ELECTRIC/PLASTIC - 3" X 2" X 2.8" - CANADIAN
	141272-01-02B	EA	BOX - ELECTRICAL - E-COATED
	008294-01-000	EA	COVER - ELECTRIC BOX - BLANK/STEEL - 4" X 4" - GRAY
	069238-01-000	EA	COVER - ELECTRICAL BOX - W/HOLE - 4" X 4" - GRAY
	131680-01-000	EA	COVER - F/ELECTRIC BOX W/GASKET 4" X 4" - UL/CSA
	141273-01-02B	EA	COVER - ELECTRICAL BOX - E-COATED
	084993-01-000	EA	STRAP - BATTERY - 43.2" LONG

WIRE ASSEMBLIES

KEY	PART NUMBER	U/M	DESCRIPTION
	077069-02-000	EA	CABLE/EXTENSION - RADIO ANTENNA - 96"
	077069-03-000	EA	CABLE/EXTENSION - RADIO ANTENNA - 260"
	145210-01-000	FT	CABLE - COAXIAL
	106851-01-000	EA	WIRE ASSEMBLY - RUNNING LIGHTS - FUSE
	116894-01-000	EA	WIRE ASSEMBLY - SPEED SENSOR EXTENDED
	120269-08-000	EA	HARNESS/WIRE - F/ELECTRIC MIRRORS
	125853-04-000	EA	WIRE LOOM - ENTERTAINMENT CENTER
	134551-06-000	EA	WIRE ASSEMBLY - HEATER/TANKS - 3 PAD - 196.5” (LONGEST WIRE)
	134551-08-000	EA	WIRE ASSEMBLY - HEATER/TANKS - 2 PAD - 216.2” (LONGEST WIRE)
	134551-09-000	EA	WIRE ASSEMBLY - HEATER/TANKS - 2 PAD - 114” (LONGEST WIRE)
	134551-10-000	EA	WIRE ASSEMBLY - HEATER/TANKS - 2 PAD - 167.1” (LONGEST WIRE)
	135420-08-000	EA	WIRE - RADIO - C FORD - 4 PIN FROM: 00-00-00 THRU: 05-29-05
	135420-17-000	EA	WIRE - RADIO - C FORD - 4 PIN FROM: 05-30-05 THRU: 99-99-99
	137135-03-000	EA	WIRE LOOM - DIGITAL ELEVATION SENSOR
	137135-04-000	EA	WIRE HARNESS - POWER - DIGITAL ELEVATION SENSOR
	151316-03-000	EA	WIRE ASM - W/NON CONTACT SENSORS - GREY WTR - 43.2"
	151316-06-000	EA	WIRE ASM - W/NON CONTACT SENSORS - GREY WTR - 78.6"
	151317-01-000	EA	WIRE ASM-W/NON CONTACT SENSORS-FRESH WTR/BLK TANK-3.9"
	151317-02-000	EA	WIRE ASM-W/NON CONTACT SENSORS-FRESH WTR/BLK TANK-23.6"
	151317-03-000	EA	WIRE ASM-W/NON CONTACT SENSORS-FRESH WTR/BLK TANK-43.2"
	151317-04-000	EA	WIRE ASM-W/NON CONTACT SENSORS-FRESH WTR/BLK TANK-62.9"

COPYRIGHT © 2006 WINNEBAGO INDUSTRIES INC.

ELECTRICAL GROUP (CONTINUED)

CONNECTORS & CONDUIT

KEY	PART NUMBER	U/M	DESCRIPTION
	007940-01-000	EA	RECEPTACLE/SLIDE 16 TO 12 AWG - FEMALE END
	007940-02-000	EA	RECEPTACLE/SLIDE 10 AWG
	007954-01-000	EA	RECEPTACLE - HOUSING - 6 POSITION
	007956-05-000	EA	INSULATOR - SHRINK - 1/4"ID X 1 1/2"
	008058-01-000	EA	ADAPTER - POWER CORD - 30 AMP TO 15 AMP
	008311-01-000	EA	CONNECTOR - WIRE NUT - INSULATED - RED
	008312-01-000	EA	CONNECTOR - WIRE NUT - INSULATED - BLUE
	008313-01-000	EA	CONNECTOR - WIRE NUT - INSULATED - YELLOW
	008314-01-000	EA	CONNECTOR - WIRE NUT - INSULATED - GRAY
	008328-01-000	EA	TERMINAL - RING - 12/10 WIRE - #10 STUD FIT
	008331-01-000	EA	TERMINAL - RING - TONGUE - #4 WIRE - 3/8" STUD - COPPER
	008348-01-000	EA	TERMINAL - RING - 3/8" STUD 2 GA. WIRE
	008355-01-000	EA	CONNECTOR - CABLE CLAMPING - 3/4"
	008356-01-000	EA	CONNECTOR - PLASTIC - 3/8"
	008356-02-000	EA	CONNECTOR - PLASTIC - 21/32"
	008398-01-000	EA	CONNECTOR - 1/2" X 90 DEGREE - FLEX CONDUIT - UL & CSA
	035416-04-000	EA	TERMINAL - RING - #10 STUD FIT - INSULATED BARREL #16/14
	041953-01-000	FT	CONDUIT - CONVOLUTE SLIT - .5" ID - POLYETHYLENE
	041953-02-000	FT	CONDUIT - CONVOLUTE SLIT - .6" ID - POLYETHYLENE
	041953-03-000	FT	CONDUIT - CONVOLUTE SLIT - 1" ID (CLOTHES ROD COVER)
	041953-06-000	FT	CONDUIT - CONVOLUTE SLIT - .4" ID - POLYETHYLENE
	041953-07-000	FT	CONDUIT - CONVOLUTE SLIT - .25" ID - POLYETHYLENE
	041953-08-000	FT	CONDUIT - CONVOLUTE SLIT - 1.5" ID - POLYETHYLENE
	041953-09-000	FT	CONDUIT - CONVOLUTE SLIT - .5" ID - NYLON
	041953-10-000	FT	CONDUIT - CONVOLUTE SLIT - .75" ID - NYLON
	041953-11-000	FT	CONDUIT - CONVOLUTE SLIT - 1.06" ID - NYLON
	041953-12-000	FT	CONDUIT - CONVOLUTE SOLID - 1.1" ID - NYLON
	041953-13-000	FT	CONDUIT - CONVOLUTE SLIT - 1.25" ID
	041953-14-000	FT	CONDUIT - CONVOLUTE SLIT - 1.5" ID
	041953-15-000	FT	CONDUIT - CONVOLUTE SLIT - 2"
	047443-01-000	EA	TERMINAL - .250 RECEPTACLE FIT - INSULATED - 16/14 AWG
	047443-02-000	EA	TERMINAL - .250 RECEPTACLE FIT - INSULATED - 12/10 AWG
	047443-05-000	EA	TERMINAL - .250 RECEPTICLE FIT - 18GA AWG
	058028-01-000	EA	CONNECTOR - ELECTRICAL PIGTAIL - NYLON - CLEAR
	077479-01-000	EA	BOOT - BATTERY TERMINAL - DOUBLE CABLE
	077479-02-000	EA	BOOT - BATTERY TERMINAL - SINGLE CABLE
	080015-02-000	EA	RECEPTACLE - FLAG - .185 - 16/14 GAUGE
	080015-03-000	EA	RECEPTACLE - FLAG - .250 - 14/16 GAUGE
	080015-04-000	EA	RECEPTACLE - FLAG - .187 - 16/14 GAUGE
	082109-01-000	EA	HOUSING - CONNECTOR - PACKARD
	087225-01-000	FT	SLEEVING - 1/2" - TYPE H
	087949-01-000	EA	BUSS BAR - 2 POSITION - .6" X 1.5"
	088473-01-000	EA	HOUSING - PIN - 12 CAVITY (3 ROWS OF 4)
	088473-02-000	EA	HOUSING - PIN - 15 CAVITY (3 ROWS OF 5)
	088473-03-000	EA	HOUSING - PIN - 9 CAVITY (3 ROWS OF 3)
	088473-04-000	EA	HOUSING - PIN - 8 CAVITY IN-LINE
	088473-06-000	EA	HOUSING - PIN - 6 CAVITY (2 ROWS OF 3)
	088473-07-000	EA	HOUSING - PIN - 5 CAVITY - IN-LINE
	088473-08-000	EA	HOUSING - PIN - 4 CAVITY - IN-LINE
	088473-09-000	EA	HOUSING - PIN - 3 CAVITY - IN-LINE
	088473-10-000	EA	HOUSING - PIN - 2 CAVITY - IN-LINE
	088473-12-000	EA	HOUSING - PIN - 3 CAVITY - BLUE
	088473-13-000	EA	HOUSING - PIN - 3 CAVITY - GREEN
	088473-14-000	EA	HOUSING - PIN - 3 CAVITY - RED
	088474-01-000	EA	HOUSING - SOCKET - 12 CAVITY
	088474-02-000	EA	HOUSING - SOCKET - 15 CAVITY
	088474-03-000	EA	HOUSING - SOCKET - 9 CAVITY
	088474-06-000	EA	HOUSING - SOCKET - 6 CAVITY
	088474-07-000	EA	HOUSING - SOCKET - 5 CAVITY
	088474-08-000	EA	HOUSING - SOCKET - 4 CAVITY
	088474-09-000	EA	HOUSING - SOCKET - 3 CAVITY
	088474-10-000	EA	HOUSING - SOCKET - 2 CAVITY
	088475-01-000	EA	PIN - CONNECTOR - 14-20 AWG
	088475-02-000	EA	PIN - CONNECTOR - 10-12 AWG

COPYRIGHT © 2006 WINNEBAGO INDUSTRIES INC.

ELECTRICAL GROUP (CONTINUED)

CONNECTORS & CONDUIT (CONTINUED)

KEY	PART NUMBER	U/M	DESCRIPTION
	088476-01-000	EA	TERMINAL - ELECTRICAL
	088476-02-000	EA	SOCKET - CONNECTOR - 12-10 GA - PRE-TIN
	098261-01-000	EA	SOCKET - CONNECTOR - WEATHERPACK - 12 AWG
	098261-02-000	EA	SOCKET - CONNECTOR - WEATHERPACK - 14-18 AWG
	098262-01-000	EA	SEAL - CONNECTOR - WEATHERPACK
	098264-01-000	EA	HOUSING - 2 PIN - WEATHER PACK - MALE W/FEMALE PINS
	098264-02-000	EA	HOUSING - 2 PIN - WEATHER PACK - FEMALE W/MALE PINS
	098265-02-000	EA	PIN - CONNECTOR - WEATHER PACK
	102777-02-000	EA	TERMINAL - RING - #6 STUD - 10 AWG
	103608-01-000	EA	SOCKET - WEDGE BASE W/LEADS
	104100-01-000	EA	HOUSING - 1 POSITION - 75 AMPS
	104100-03-000	EA	TERMINAL - 75 AMP
	106007-02-000	EA	TERMINAL - FEMALE - 10-12 AWG
	110178-01-000	EA	HOUSING - WIPER MOTOR
	112823-01-000	EA	SPLICE - REDUCER - 16-14 TO 18-22
	113135-01-000	EA	TERMINAL - FEMALE - M/P - 14-16 - F/SEALED TERMINAL
	113308-01-000	EA	TERMINAL - FEMALE - M/P - 14-16 - 280
	115931-02-000	EA	COVER - CONNECTOR - 50 AMP W/LOCKING RING
	115932-02-000	EA	CONNECTOR - FEMALE - 50 AMP/240 VOLT
	118571-01-000	EA	CONNECTOR - 3-WAY - MALE/SEALED
	118571-02-000	EA	CONNECTOR - 3-WAY - FEMALE/SEALED
	118571-05-000	EA	LOCK - SECONDARY - FEMALE
	118571-06-000	EA	LOCK - SECONDARY - MALE
	118820-01-000	EA	INSULATOR - TERMINAL
	129233-01-000	EA	HOUSING - 2-POSITION/FEMALE - 280-SERIES
	131681-01-000	EA	CONNECTOR - 3/4" SO CORD - UL/CS
	137207-01-000	EA	HOUSING - PIN - 2 CAVITY/HIGH AMP
	137208-01-000	EA	HOUSING - SOCKET - 2 CAVITY/HIGH AMP
	137209-01-000	EA	PIN - CONNECTOR - 10 AWG/HIGH AMP
	137210-01-000	EA	SOCKET - CONNECTOR - 10 AWG/HIGH AMP
	142520-01-000	EA	TERMINAL - FEMALE - MINI-FIT 16
	142522-02-000	EA	HOUSING - 6 PIN/MALE - MINI FIT
	142522-04-000	EA	HOUSING - 10 PIN/MALE - MINI FIT
	142522-05-000	EA	HOUSING - 12 PIN/MALE - MINI FIT
	142522-06-000	EA	HOUSING - 14 PIN/MALE - MINI FIT
	142524-01-000	EA	HOUSING - 4 PIN/FEMALE - WEATHER PACK
	142524-02-000	EA	HOUSING - 4 PIN/FEMALE - WEATHER PACK
	144283-01-000	EA	CONNECTOR - 110V - F/USE WITH SOW WIRE - BLUE
	144283-02-000	EA	CONNECTOR - 110V - F/USE WITH NM ROMEX WIRE - CLEAR
	145171-01-000	EA	CONNECTOR - COAXIAL
	148335-01-000	EA	HOUSING - 8-POSITION/MALE - 280-GT SERIES
	148335-02-000	EA	HOUSING - 4-POSITION/MALE - 280-GT SERIES
	149686-01-000	EA	TERMINAL - .250 RECEPTACLE
	149687-01-000	EA	HOUSING - 2 POSITION/MALE - PACKARD
	149687-02-000	EA	LOCK - F/2 POSITION HOUSING - PACKARD
	149688-01-000	EA	TERMINAL - MALE - 16 GAUGE WIRE
	154799-01-000	EA	HOUSING - 4-POSITION/FEMALE - 150-SERIES
	154799-02-000	EA	LOCK - SECONDARY - 4 POSITION
	156035-01-000	EA	HOUSING - 12-POSITION/FEMALE - 280-GT SERIES
	156041-01-000	EA	TERMINAL - FEMALE - 16-12 - 280-GT SERIES
	156043-01-000	EA	HOUSING - 2-POSITION/FEMALE - 480-MP SERIES
	156043-02-000	EA	LOCK - F/2 POSITION HOUSING - 480 SERIES
	156044-01-000	EA	TERMINAL - FEMALE - 16-12 - 280-GT - F/SEALED HOUSING
	156045-01-000	EA	HOUSING - 10-POSITION/FEMALE - 280-GT SERIES
	156045-02-000	EA	HOUSING - 4-POSITION/FEMALE - 280-GT SERIES

COPYRIGHT © 2006 WINNEBAGO INDUSTRIES INC.

ELECTRICAL GROUP (CONTINUED)

CHASSIS

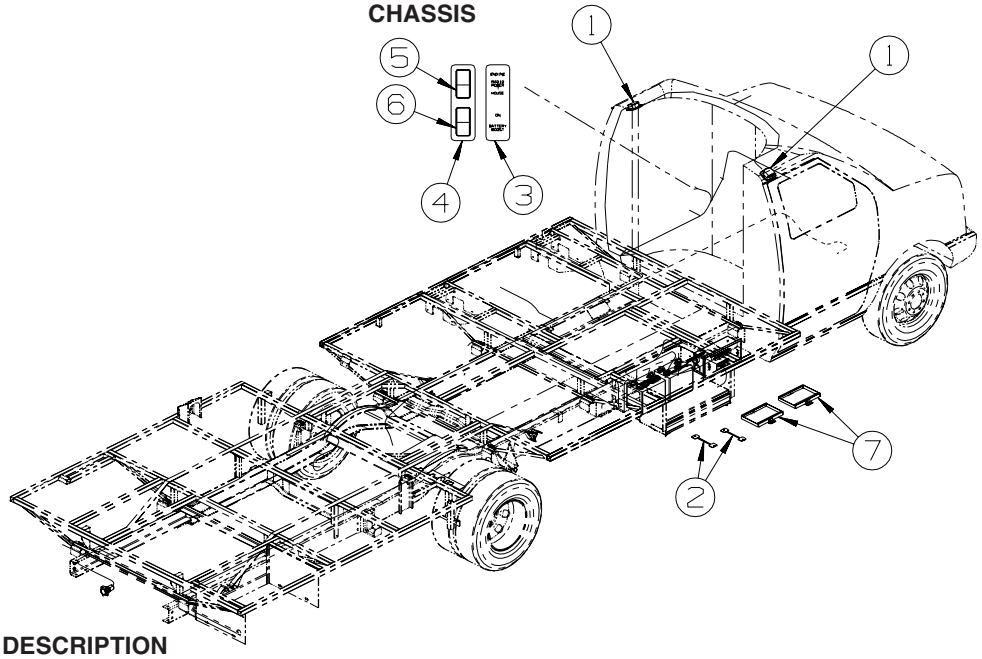

KEY	PART NUMBER	U/M	DESCRIPTION
1	112643-01-000	EA	LIGHT - SINGLE - SWIVEL
1	112642-01-06A	EA	TRIM RING - SINGLE LIGHT - BLACK
2	065450-05-000	EA	TIEDOWN - BATTERY - 8.4" TUBE
			FROM: 00-00-00 THRU: 03-12-06
2	160014-01-02B	EA	TIEDOWN - BATTERY - E-COATED
			FROM: 03-13-06 THRU: 99-99-99
2	065451-05-000	EA	BRACKET/TIEDOWN - BATTERY - 7.7" FROM BRKT TO BRKT
3	145731-01-01A	EA	LABEL - SWITCH - RADIO/BATTERY - BLACK
4	144363-12-04B	EA	PLATE - SWITCH - BLACK
5	108357-08-000	EA	SWITCH - ROCKER - DPDT - 0N/NONE/ON - 6 TERM - W/O COVER
5	108356-02-01A	EA	COVER/ACTUATOR SWITCH - 2 ROWS DIMPLES - BLACK
5	108355-01-000	EA	HOUSING - SWITCH
6	108357-09-000	EA	SWITCH - ROCKER - SPDT - ON/NONE/MOM - 3 TERM - W/O COVER
6	108356-02-01A	EA	COVER/ACTUATOR SWITCH - 2 ROWS DIMPLES - BLACK
6	108355-01-000	EA	HOUSING - SWITCH
7	146624-01-02B	EA	TIEDOWN - BATTERY - E-COATED

CHEVY

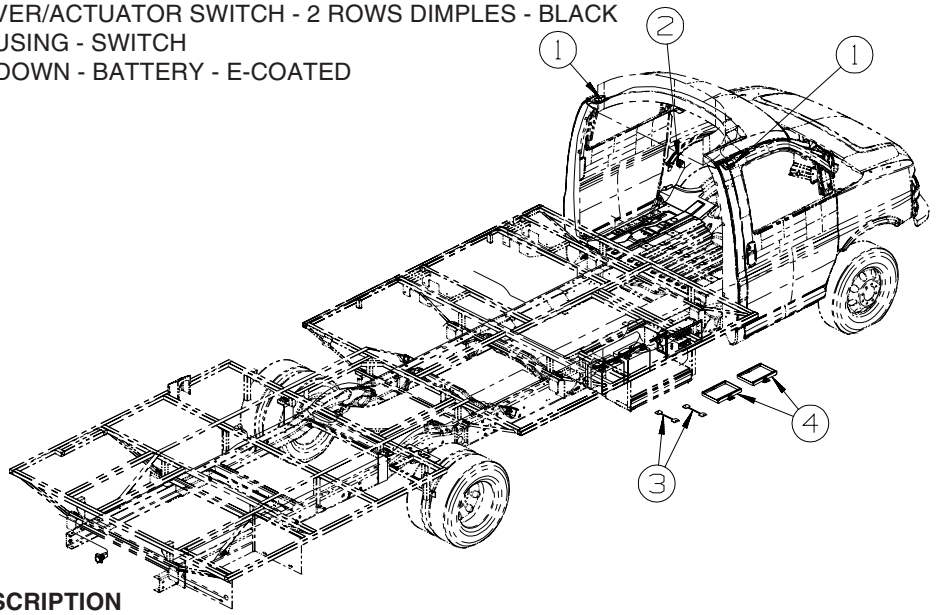

KEY	PART NUMBER	U/M	DESCRIPTION
1	112643-01-000	EA	LIGHT - SINGLE - SWIVEL
1	112642-01-06A	EA	TRIM RING - SINGLE LIGHT - BLACK
2	144363-07-04B	EA	PLATE - SWITCH - BLACK
2	108357-09-000	EA	SWITCH - ROCKER - SPDT - ON/NONE/MOM - 3 TERM - W/O COVER
2	108356-07-01A	EA	COVER/ACTUATOR SWITCH - 2 ROWS DIMPLES - AUX START - BLACK
2	108355-01-000	EA	HOUSING - SWITCH
3	065450-05-000	EA	TIEDOWN - BATTERY - 8.4" TUBE
3	065451-05-000	EA	BRACKET/TIEDOWN - BATTERY - 7.7" FROM BRKT TO BRKT
4	146624-01-02B	EA	TIEDOWN - BATTERY - E-COATED

COPYRIGHT © 2006 WINNEBAGO INDUSTRIES INC.

ELECTRICAL GROUP (CONTINUED)

CHASSIS (CONTINUED)

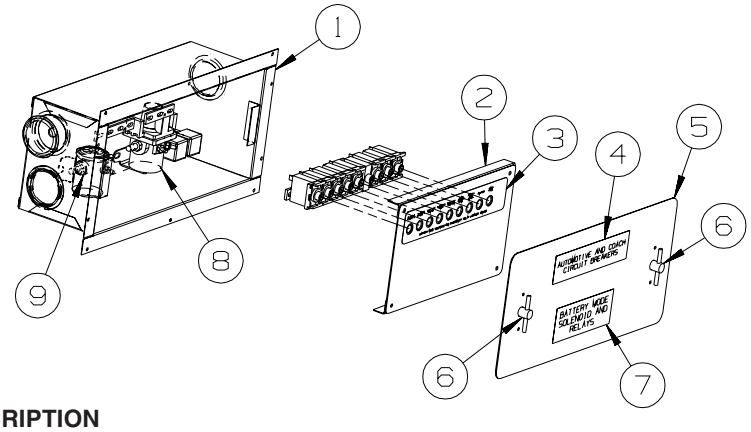

KEY	PART NUMBER	U/M	DESCRIPTION
1	141272-01-02B	EA	BOX - ELECTRICAL - E-COATED
2	139067-04-02B	EA	PLATE - CIRCUIT BREAKER/HOUSE - E-COATED
3	093236-38-000	EA	LABEL - CIRCUIT BREAKER
4	098379-01-000	EA	LABEL - CIRCUIT BREAKER - FRONT BOX
5	141273-01-02B	EA	COVER - ELECTRICAL BOX - E-COATED
5	092492-16-000	EA	SEAL - ELECTRICAL BOX
6	098196-01-000	EA	LATCH - 1/4 TURN - T-BAR
7	098379-04-000	EA	LABEL - ELECTRICAL BOX - SIDE
8	086273-01-000	EA	RELAY - BATTERY DISCONNECT
9	008188-01-000	EA	SOLENOID - 3 POST - BATTERY CHANGE OVER

COPYRIGHT © 2006 WINNEBAGO INDUSTRIES INC.

EXTERIOR BODY GROUP

GRAPHICS & PAINT

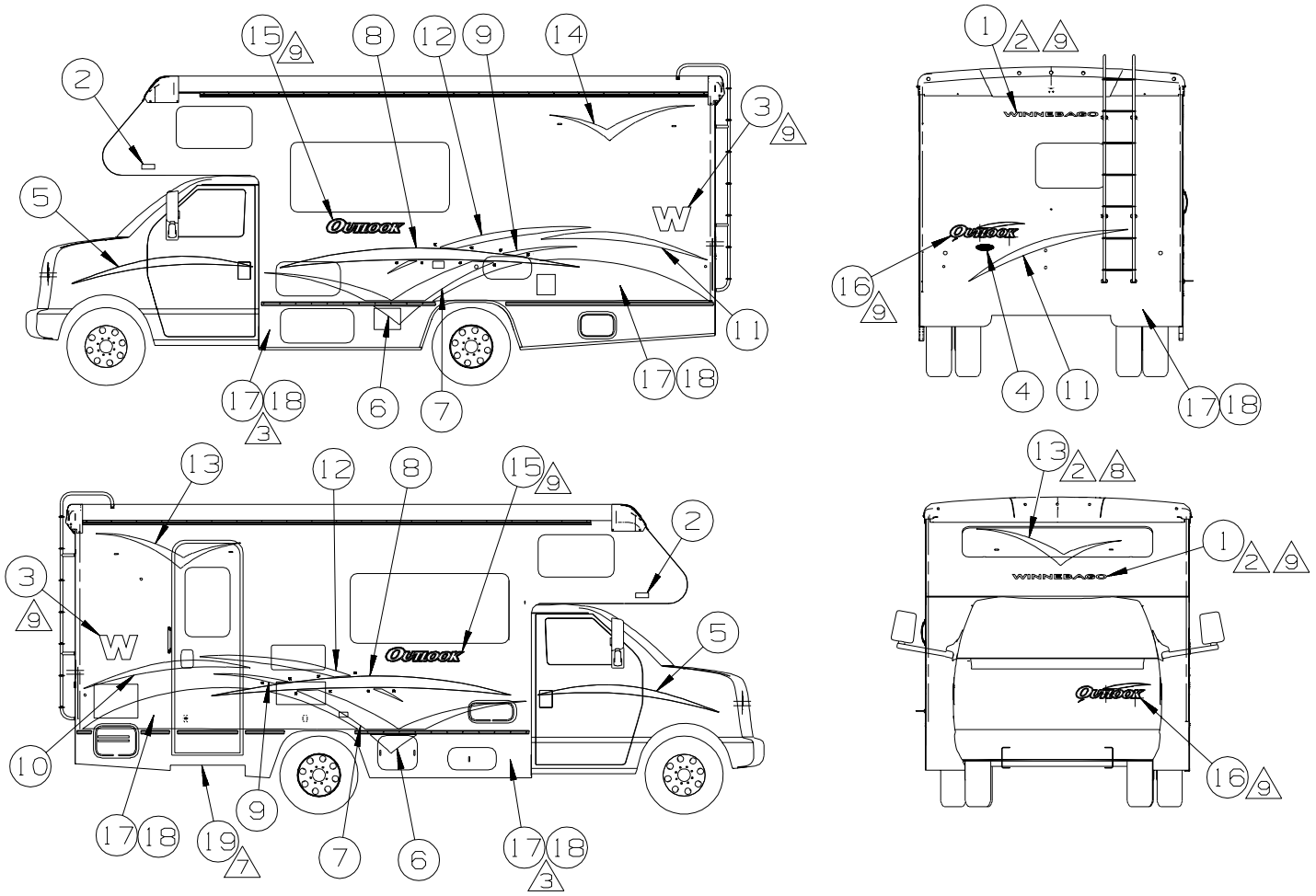

△6 WITH OVERHEAD TV.

△5 OPTIONAL PAINT

△4 CLEAR COAT TO BE APPLIED ON PAINTED AREAS TO PROPECT PAINT.

△3 PAINTED AREA IS TO BE BELOW FEATURE STRIP FOR OPTIONAL PAINTED MODELS AND CONTINUES ON CAB DOORS TO WHEELWELL.

△2 CENTERED ON UNIT.

1. APPLY PROTECTOR 116424-01-000 TO WATER HEATER DOOR LATCH.

NOTES:

△9 LOGO IS TO BE ±1 MM ON A HORIZONTAL PLANE (END TO END).

△8 NOT AVAILABLE WITH FEATURE #65L

△7 FILM TO PROTECT BOTTOM OF DOOR FROM SCUFF MARKS.

△6 (42J) TV-24" COLOR,STEREO W/REMOTE
(1FS) WINDOW FRONT BUNK DELETE

△5 (1GF) EXT PAINT #1 W/FBGLS BOARDS

△5 (1GH) EXT PAINT #2 W/FBGLS BOARDS

(27G) EXTERIOR GRAPHICS PACKAGE #1

KEY	PART NUMBER	U/M	DESCRIPTION
1	120702-03-CHT(50A)	EA	DECAL-WINNEBAGO - DP BLUE STAR
2	132664-02-CHT(01A)	EA	DECAL-LOGO,DOMED,WINNEBAGO - CHROME/RED/BLACK
3	135381-04-CHT(01A)	EA	DECAL-W - BRT WHITE/MOCHA FROST/CANYON RED
4	151687-01-CHT(01A)	EA	DECAL/BEZEL-WINNEBAGO,DOMED - CHROME/PANTENE RED
5	152832-01-CHT(01A)	EA	DECAL-CAB SWEEP,RH - MOCHA FROST/DP BLUE STAR
5	152832-02-CHT(01A)	EA	DECAL-CAB SWEEP,LH - MOCHA FROST/DP BLUE STAR
6	152845-01-CHT(01A)	EA	DECAL-HOOK,POINT,RH - CANYON RED
6	152845-02-CHT(01A)	EA	DECAL-HOOK,POINT,LH - CANYON RED
7	152846-01-CHT(01A)	EA	DECAL-HOOK SWEEP,DBL,RH - CANYON RED
7	152846-02-CHT(01A)	EA	DECAL-HOOK SWEEP,DBL,LH - CANYON RED
8	152847-01-CHT(01A)	EA	DECAL-SWEEP,MAIN,RH - LT CHARCOAL/MOCHA FROST
8	152847-02-CHT(01A)	EA	DECAL-SWEEP,MAIN,LH - LT CHARCOAL/MOCHA FROST
9	152848-01-CHT(01A)	EA	DECAL-HOOK TIP,RR,RH - CANYON RED
9	152848-02-CHT(01A)	EA	DECAL-HOOK TIP,RR,LH - CANYON RED
10	152849-01-CHT(01A)	EA	DECAL-ARC,RH - MOCHA FROST/DP BLUE STAR
11	152849-02-CHT(01A)	EA	DECAL-ARC,LH - MOCHA FROST/DP BLUE STAR
12	152850-01-CHT(01A)	EA	DECAL-SWEEP,MID,RH - MOCHA FROST
12	152850-02-CHT(01A)	EA	DECAL-SWEEP,MID,LH - MOCHA FROST
13	152851-01-CHT(01A)	EA	DECAL-HOOK,SML,RH - CANYON RED
14	152851-02-CHT(01A)	EA	DECAL-HOOK,SML,LH - CANYON RED
15	152852-01-CHT(01A)	EA	DECAL-OUTLOOK - BRT WHITE/SLATE GRAY/DP BLUE STAR
16	152853-01-CHT(01A)	EA	DECAL-OUTLOOK W/SLASH - BRT WHITE/SLATE GRAY/DP BLUE STAR/CANYON RED
△4 △5 (1GF) 17	141599-36-000	GL	PAINT - STEEL BLUE MET - DUPONT #373-P7440
△4 △5 (1GH) 18	141599-35-000	GL	PAINT - SANDSTONE BEIGE MET - DUPONT #373-P7438
19 △7	109506-01-000	EA	FILM-URETHANE PROTECTANT

COPYRIGHT © 2006 WINNEBAGO INDUSTRIES INC.

EXTERIOR BODY GROUP (CONTINUED)

GRAPHICS & PAINT (CONTINUED)

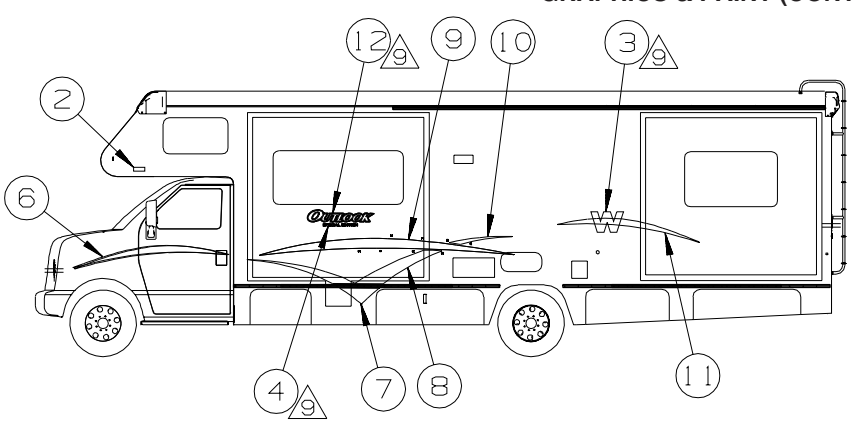

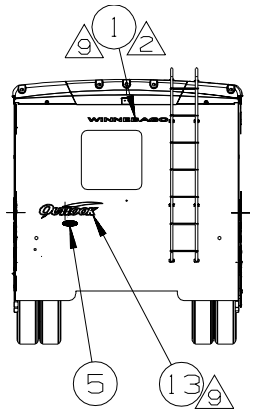

SPECIAL EDITION 329SB & 331SC

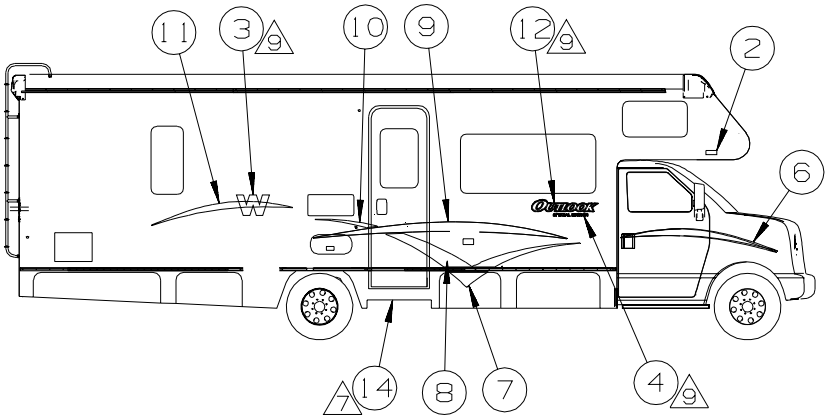

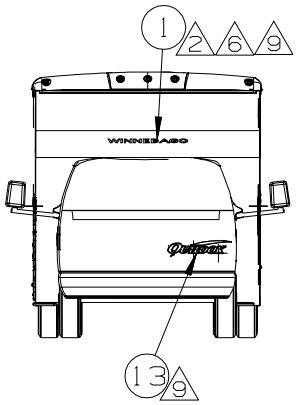

NOTES:

1. APPLY PROTECTOR 116424-01-000 TO WATER HEATER DOOR LATCH.
2. CENTERED ON UNIT.
3. PAINTED AREA IS TO BE BELOW FEATURE STRIP FOR OPTIONAL PAINTED MODELS AND CONTINUES ON CAB DOORS TO WHEELWELL.
4. CLEAR COAT TO BE APPLIED ON PAINTED AREAS TO PROPECT PAINT.
5. OPTIONAL PAINT
6. WITH OVERHEAD TV.
7. FILM TO PROTECT BOTTOM OF DOOR FROM SCUFF MARKS.
8. NOT AVAILABLE WITH FEATURE #65L
9. LOGO IS TO BE ±1 MM ON A HORIZONTAL PLANE (END TO END).

6 (42J) TV-24" COLOR,STEREO W/REMOTE
(1F5) WINDOW FRONT BUNK DELETE
5 (10F) EXT PAINT #1 W/FBGLS BOARDS
5 (10H) EXT PAINT #2 W/FBGLS BOARDS
(270) EXTERIOR GRAPHICS PACKAGE #1

KEY	PART NUMBER	U/M	DESCRIPTION
1	120702-03-CHT(50A)	EA	DECAL-WINNEBAGO - DP BLUE STAR
2	132664-02-CHT(01A)	EA	DECAL-LOGO,DOMED,WINNEBAGO - CHROME/RED/BLACK
3	135381-02-CHT(06A)	EA	DECAL-W - CANYON RED
4	147534-01-CHT(01A)	EA	DECAL-SPECIAL EDITION - BLACK
5	151687-01-CHT(01A)	EA	DECAL/BEZEL WINNEABGO,DOMED - CHROME/PANTENE RED
6	152832-03-CHT(01A)	EA	DECAL-CAB SWEEP,RH - LT CHARCOAL
6	152832-04-CHT(01A)	EA	DECAL-CAB SWEEP,LH - LT CHARCOAL
7	152845-01-CHT(01A)	EA	DECAL-HOOK POINT,RH - CANYON RED
7	152845-02-CHT(01A)	EA	DECAL-HOOK POINT,LH - CANYON RED
8	152846-01-CHT(01A)	EA	DECAL-HOOK SWEEP,DBL,RH - CANYON RED
8	152846-02-CHT(01A)	EA	DECAL-HOOK SWEEP,DBL,LH - CANYON RED
9	152847-03-CHT(01A)	EA	DECAL-SWEEP,MAIN,RH - MOCHA FROST
9	152847-04-CHT(01A)	EA	DECAL-SWEEP,MAIN,LH - MOCHA FROST
10	152848-01-CHT(01A)	EA	DECAL-HOOK TIP,RR,RH - CANYON RED
10	152848-02-CHT(01A)	EA	DECAL-HOOK TIP,RR,LH - CANYON RED
11	152849-03-CHT(01A)	EA	DECAL-ARC,RH - DP BLUE STAR
11	152849-04-CHT(01A)	EA	DECAL-ARC,LH - DP BLUE STAR
12	152852-01-CHT(01A)	EA	DECAL-OUTLOOK - BRT WHITE/SLATE GRAY/DP BLUE STAR
13	152853-01-CHT(01A)	EA	DECAL-OUTLOOK W/SLASH - BRT WHITE/SLATE GRAY/DP BLUE STAR/CANYON RED
14	109506-01-000	EA	FILM-URETHANE PORTECTANT

KEY	PART NUMBER	U/M	DESCRIPTION
	072882-01-000	GL	PAINT - LOW BAKE - OFF WHITE
	116424-01-000	EA	PROTECTOR - LATCH - WATER HEATER

DUPONT COLOR CODES ARE NOW FOUND IN THE PAINT CODE MANUAL.
YOU CAN FIND THIS MANUAL ON YOUR DEALER INDEX WEBPAGE UNDER SERVICE.

COPYRIGHT © 2006 WINNEBAGO INDUSTRIES INC.

EXTERIOR BODY GROUP (CONTINUED)

GRAPHICS & PAINT (CONTINUED)

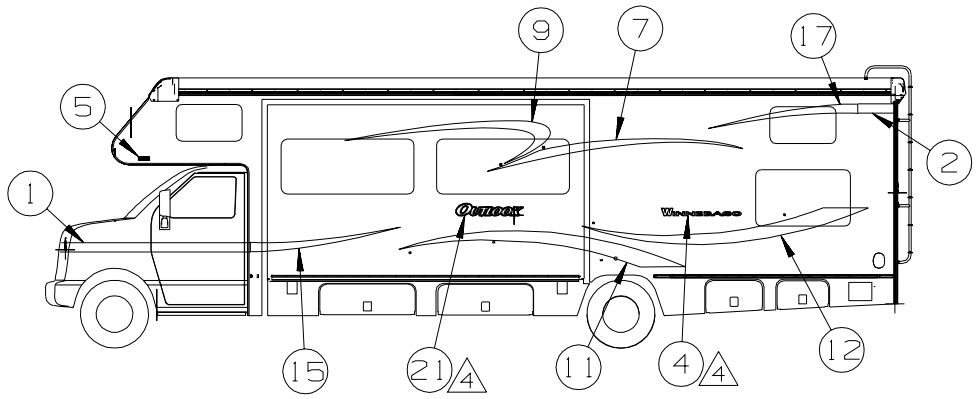

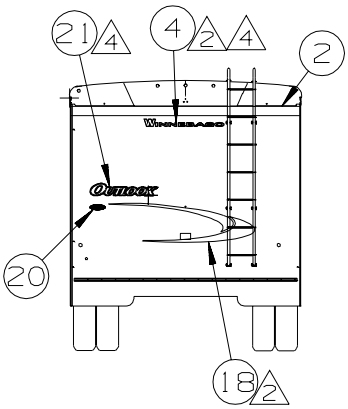

331K

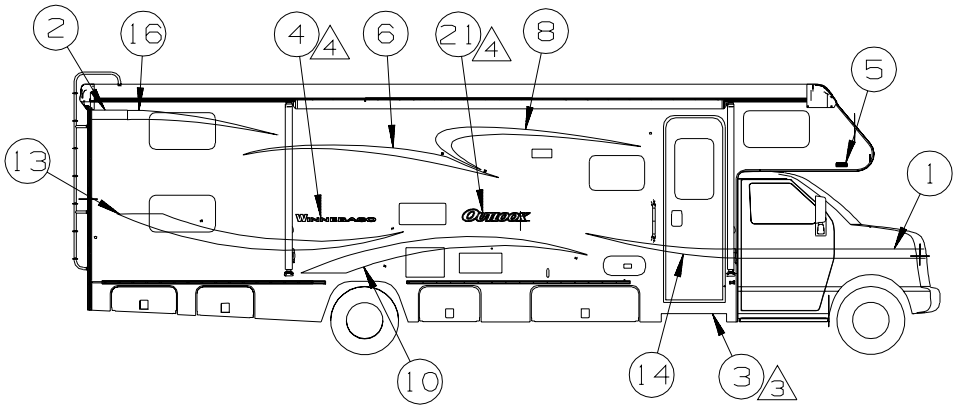

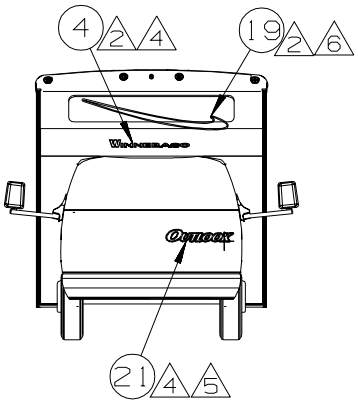

(27G) KEYS	PART NUMBER	U/M	DESCRIPTION
1	093681-68-CHT(06A)	EA	FILM-101.6 MM - MDR BLUE
2	093681-68-CHT(07A)	EA	FILM-101.6 MM - LT EM GREEN
3	109506-01-000	EA	FILM-URETHANE PROTECTANT
4	120702-04-CHT(01A)	EA	DECAL-LOGO WINNEBAGO - BRT WHITE/BLACK/GRAY
5	132664-01-CHT(02A)	EA	DECAL-LOGO DOMED WINNEBAGO SML - CHROME/BLACK
6	142081-01-CHT(04A)	EA	DECAL-SLASH UPPER RH - MDR BLUE
7	142081-02-CHT(04A)	EA	DECAL-SLASH UPPER LH - MDR BLUE
8	142082-01-CHT(04A)	EA	DECAL-SLASH UPPER FRT RH - MDR BLUE
9	142082-02-CHT(04A)	EA	DECAL-SLASH UPPER FRT LH - MDR BLUE
10	142085-01-CHT(05A)	EA	DECAL-SWEEP RR RH - LT EM GREEN/SAND
11	142085-02-CHT(05A)	EA	DECAL-SWEEP RR LH - LT EM GREEN/SAND
12	142085-01-CHT(05A)	EA	DECAL-SWEEP RR RH - LT EM GREEN/SAND
13	142085-02-CHT(05A)	EA	DECAL-SWEEP RR LH - LT EM GREEN/SAND
14	142087-01-CHT(04A)	EA	DECAL-SWEEP STRIPE RH - MDR BLUE
15	142087-02-CHT(04A)	EA	DECAL-SWEEP STRIPE LH - MDR BLUE
16	142087-01-CHT(05A)	EA	DECAL-SWEEP STRIPE RH - LT EM GREEN
17	142087-02-CHT(05A)	EA	DECAL-SWEEP STRIPE LH - LT EM GREEN
18	142088-01-CHT(04A)	EA	DECAL-SWEEP BACKWALL - MDR BLUE/GREY CH/SAND
19	142091-01-CHT(04A)	EA	DECAL-SWEEP HOOD - BRT WHITE/GREY CH/SAND
20	151687-01-CHT(01A)	EA	DECAL/BEZEL DOMED NAMEPLATE WINNEBAGO - CHROME/PANTONE RED
21	152852-01-CHT(01A)	EA	DECAL-OUTLOOK - BRT WHITE/S GRAY/DP BLUE STAR

COPYRIGHT © 2006 WINNEBAGO INDUSTRIES INC.

EXTERIOR BODY GROUP (CONTINUED)

PANELS & TRIMS

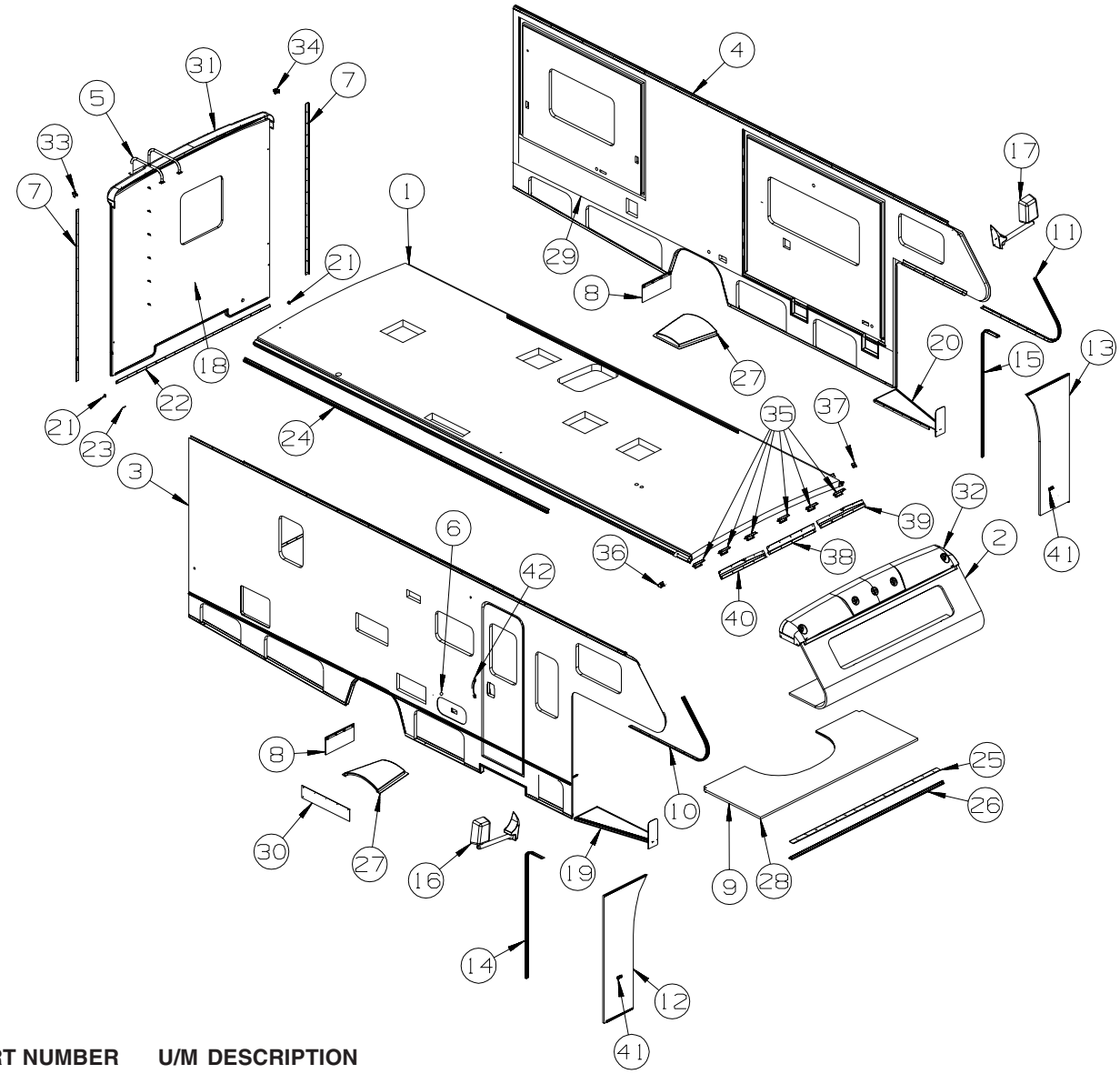

KEY	PART NUMBER	U/M	DESCRIPTION
1	154898-01-T11	EA	ROOF - W/O LIGHTS/VENTS - W/WIRING
2	152051-01-T11	EA	ROOF - FRONT SECTION - W/O LIGHTS/VENTS - W/WIRING
2	152051-02-T11	EA	ROOF - FRONT SECTION - W/O LIGHTS/VENTS - W/WIRING - FRONT BUNK WINDOW DELETE
2	152051-03-T11	EA	ROOF - FRONT SECTION - W/O LIGHTS/VENTS - W/WIRING - TV-24" COLOR, STEREO W/REMOTE
3	P54896-01-T11	EA	SIDEWALL - PASSENGER - W/O WINDOWS/TRIMS (T11, TK0)
3	P54896-01-T12	EA	SIDEWALL - PASSENGER - W/O WINDOWS/TRIMS (T12, TK1)
3	P54896-01-T13	EA	SIDEWALL - PASSENGER - W/O WINDOWS/TRIMS (T13, TK2)
4	P54897-01-T11	EA	SIDEWALL - DRIVER - W/O WINDOWS/TRIMS (T11, TK0)
4	P54897-01-T12	EA	SIDEWALL - DRIVER - W/O WINDOWS/TRIMS (T12, TK1)
4	P54897-01-T13	EA	SIDEWALL - DRIVER - W/O WINDOWS/TRIMS (T13, TK2)
5	129639-04-01A	EA	LADDER - 85.1" - 6 STEP - BRUSHED ALUMINUM
6	117046-02-000	EA	BUMPER - RUBBER/ROUND END - 1.5"
7	096854-14-01A	EA	TRIM - CONTOUR - 88.2" - BRIGHT WHITE
8	017516-05-000	EA	MUD FLAP - 9"H X 18"W - RUBBER - BLACK
9	P25129-02-T11	EA	SLEEPERBOARD
10	136826-13-01A	EA	TRIM - CONTOUR - 80.2" - BRIGHT WHITE
11	136826-14-01A	EA	TRIM - CONTOUR - 80.2" - BRIGHT WHITE
12	125088-08-N01	EA	WINGWALL - PASSENGER
			FROM: 00-00-00 THRU: 02-26-06
12	159600-01-T11	EA	WINGWALL
			FROM: 02-27-06 THRU: 99-99-99
13	125088-10-S01	EA	WINGWALL - DRIVER
			FROM: 00-00-00 THRU: 02-26-06
13	159600-02-T11	EA	WINGWALL
			FROM: 02-27-06 THRU: 99-99-99

COPYRIGHT © 2006 WINNEBAGO INDUSTRIES INC.

EXTERIOR BODY GROUP (CONTINUED)

PANELS & TRIMS (CONTINUED)

KEY	PART NUMBER	U/M	DESCRIPTION
14	104479-09-02A	EA	TRIM - WINGWALL - PASSENGER SIDE - VERTICAL - BRIGHT WHITE
15	104479-10-02A	EA	TRIM - WINGWALL - DRIVER SIDE - VERTICAL - BRIGHT WHITE
16*	133908-10-01A	EA	MIRROR/PASS - 102" - FORD 4-BOLT MT - BRIGHT WHITE
16*	133908-05-02A	EA	MIRROR/PASS - 102" - CHEVY - BRIGHT WHITE
16*	133908-12-01A	EA	MIRROR/PASS - 102" - FORD 4 BOLT MT-HEATED/REMOTE-B/W - MIRRORS EXTERIOR WI/DEFROST
16*	133908-07-02A	EA	MIRROR/PASS - 102" - CHEVY - HEATED REMOTE - BRT WHT - MIRRORS EXTERIOR WI/DEFROST
17*	133908-11-01A	EA	MIRROR/DRVR - 102" - FORD 4-BOLT MT - BRIGHT WHITE
17*	133908-06-02A	EA	MIRROR/DRVR - 102" - CHEVY - BRIGHT WHITE
17*	133908-13-01A	EA	MIRROR/DRVR - 102" - FORD 4-BOLT MT-HEATED/REMOTE-B/W - MIRRORS EXTERIOR WI/DEFROST
17*	133908-08-02A	EA	MIRROR/DRVR - 102" - CHEVY - HEATED/REMOTE - BRT WHT - MIRRORS EXTERIOR WI/DEFROST
18	154929-01-T11	EA	BACKWALL - W/O WINDOW/TRIMS (T11, TK0)
18	154929-01-T12	EA	BACKWALL - W/O WINDOW/TRIMS (T12, TK1)
18	154929-01-T13	EA	BACKWALL - W/O WINDOW/TRIMS (T13, TK2)
18	154929-02-T11	EA	BACKWALL - W/O WINDOW/TRIMS (T11, TK0) - DUAL PANE WINDOW
18	154929-02-T12	EA	BACKWALL - W/O WINDOW/TRIMS (T12, TK1) - DUAL PANE WINDOW
18	154929-02-T13	EA	BACKWALL - W/O WINDOW/TRIMS (T13, TK2) - DUAL PANE WINDOW
19*	072884-27-000	EA	RUNNING BOARD SET - 39" - FORD - ALUMINUM
19	149604-01-01A	EA	RUNNING BOARD/WEDGE - PASS - FORD - EXTERIOR PAINT W/FIBERGLASS RUNNING BOARDS
19	149604-05-01A	EA	MUD FLAP - FIBERGLASS - PASS - FORD - EXTERIOR PAINT W/FIBERGLASS RUNNING BOARDS
	149604-09-000	EA	HARDWARE INSTALLATION KIT - FORD - EXTERIOR PAINT W/FIBERGLASS RUNNING BOARDS
19*	072884-28-000	EA	RUNNING BOARD SET - ALUMINUM - CHEVY CHASSIS
19	149604-10-01A	EA	RUNNING BOARD/WEDGE - PASSENGER - CHEVY 300 - PRIMED
19	149604-14-01A	EA	MUD FLAP - FIBERGLASS - PASSENGER - CHEVY
	149604-16-000	EA	HARDWARE KIT (RUNNING BOARD INSTALL) - CHEVY
	146515-03-01A	EA	MAT - ANTI SLIP - RIGHT HAND - BLACK - EXTERIOR PAINT W/FIBERGLASS RUNNING BOARDS
20*	072884-27-000	EA	RUNNING BOARD SET - 39" - FORD - ALUMINUM
20	149604-02-01A	EA	RUNNING BOARD/WEDGE - DRIVER - FORD - EXTERIOR PAINT W/FIBERGLASS RUNNING BOARDS
20	149604-06-01A	EA	MUD FLAP - FIBERGLASS - DRIVER - FORD - EXTERIOR PAINT W/FIBERGLASS RUNNING BOARDS
	149604-09-000	EA	HARDWARE INSTALLATION KIT - FORD - EXTERIOR PAINT W/FIBERGLASS RUNNING BOARDS
20*	072884-28-000	EA	RUNNING BOARD SET - ALUMINUM - CHEVY
20	149604-11-01A	EA	RUNNING BOARD/WEDGE - DRIVER - CHEVY - EXTERIOR PAINT W/FIBERGLASS RUNNING BOARDS
20	149604-15-01A	EA	MUD FLAP - FIBERGLASS - DRIVER - CHEVY - EXTERIOR PAINT W/FIBERGLASS RUNNING BOARDS
	149604-16-000	EA	HARDWARE INSTALLATION KIT - CHEVY - EXTERIOR PAINT W/FIBERGLASS RUNNING BOARDS
	146515-04-01A	EA	MAT - ANTI SLIP - LEFT HAND - BLACK - EXTERIOR PAINT W/FIBERGLASS RUNNING BOARDS
21	108651-01-01A	EA	END CAP - FEATURE STRIP
22	108688-06-03A	EA	STRIP - FEATURE - W/O INSERT/END CAPS - 96.9" - BRIGHT WHT
23	105312-01-07A	FT	INSERT - FEATURE STRIP - VINYL - BRIGHT WHITE
24	131483-01-01A	EA	RAIL - AWNING - 192" - BRIGHT WHITE FROM: 00-00-00 THRU: 10-02-05
24	157284-01-01A	EA	RAIL - AWNING - 192" - BRIGHT WHITE FROM: 10-03-05 THRU: 99-99-99
25	100085-05-01A	EA	TRIM/STRAP - SLEEPERBOARD - OFF/WHITE - 92.9"
26	100086-03-02A	EA	TRIM - SLEEEPER BOARD BRIGHT WHITE - 2" X 96.5"
27	112435-03-000	EA	WHEELWELL
28	154585-04-01A	FT	SEAL - FOAM TAPE - ADHESIVE BACK - 5/8" X 1/8" - WHITE
29	104692-01-000	FT	SEAL - ADHESIVE BACKED FOAM - 3/4" THICK X 3/4" WIDE X 25'
30	121948-02-000	EA	SHIELD - SIGHT
31	140596-02-P07	EA	CAP - ROOF/REAR - W/O LIGHTS/VENTS/WIRING-W/STEEL SUPPORT
32	140443-02-P07	EA	CAP - ROOF/FRONT - W/O LIGHTS/VENTS - W/WIRING
33	140620-01-01A	EA	CAP - TRIM - REAR/RIGHT - BRIGHT WHITE
34	140620-02-01A	EA	CAP - TRIM - REAR/LEFT - BRIGHT WHITE
35	134774-01-02B	EA	BRACKET - CAB ATTACHMENT - E-COATED
36	140476-01-01A	EA	CAP - TRIM - CORNER/PASSENGER
37	140476-02-01A	EA	CAP - TRIM - CORNER/DRIVER
38	140805-01-02B	EA	BRACKET - ROOF CAP/FRONT - E-COATED
39	141718-02-02B	EA	BRACKET - ROOF CAP - END/LEFT HAND - E-COATED
40	141718-01-02B	EA	BRACKET - ROOF CAP - END/RIGHT HAND - E-COATED
41	016604-01-000	EA	BRACE - ANGLE - 2 1/2" - UNPAINTED METAL
42	152854-01-01A	EA	HANDLE - ASSIST - WHITE W/BLACK RUBBER GRIP - 18 5/8"
43	140922-01-02B	EA	RETAINER - MUD FLAP - 1" X 17.7" - E-COATED/BLACK

***COMPONENT PARTS LISTED LATER IN THIS GROUP**

COPYRIGHT © 2006 WINNEBAGO INDUSTRIES INC.

EXTERIOR BODY GROUP (CONTINUED)

PANELS & TRIMS (CONTINUED)

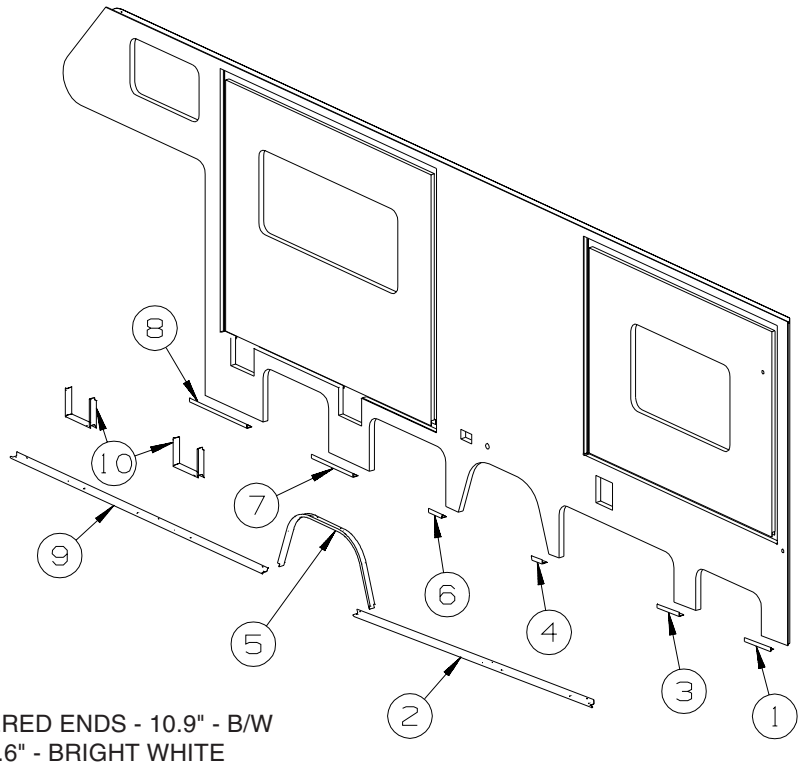

KEY	PART NUMBER	U/M	DESCRIPTION
1	148759-90-01A	EA	TRIM - SIDEWALL/LOWER - MITERED ENDS - 10.9" - B/W
2	148760-37-01A	EA	TRIM - ROCKER - NOTCHED - 99.6" - BRIGHT WHITE
3	148759-89-01A	EA	TRIM - SIDEWALL/LOWER - MITERED ENDS - 9.2" - B/W
4	148759-88-01A	EA	TRIM - SIDEWALL/LOWER - MITERED ENDS - 4.6" - B/W
5	127848-01-01A	EA	TRIM - WHEELWELL - BRIGHT WHITE
6	148759-87-01A	EA	TRIM - SIDEWALL/LOWER - MITERED ENDS - 5.5" - B/W
7	148759-85-01A	EA	TRIM - SIDEWALL/LOWER - MITERED ENDS - 16.9" - B/W
8	148759-86-01A	EA	TRIM - SIDEWALL/LOWER - MITERED ENDS - 23.5" - B/W
9	148760-36-01A	EA	TRIM - ROCKER - NOTCHED - 105" - BRIGHT WHITE
10	148736-01-S34	EA	TRIM - SIDEWALL

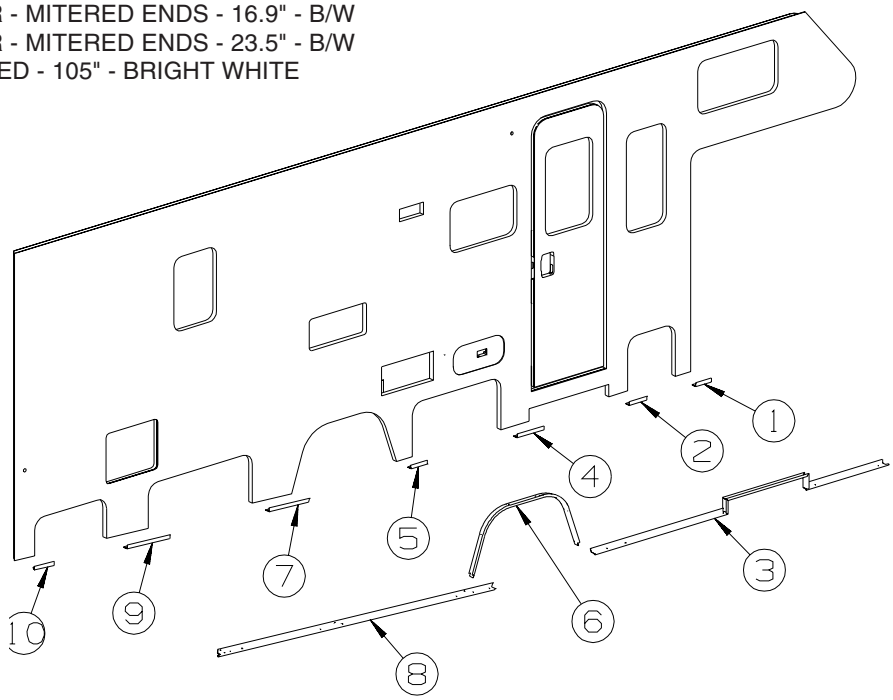

KEY	PART NUMBER	U/M	DESCRIPTION
1	148759-91-01A	EA	TRIM - SIDEWALL/LOWER - MITERED ENDS - 5.5" - B/W
2	148759-92-01A	EA	TRIM - SIDEWALL/LOWER - MITERED ENDS - 6.3" - B/W
3	128732-15-S01	EA	TRIM - PASSENGER SIDEWALL W/ENTRY DOOR NOTCH - 105.4"
4	148759-93-01A	EA	TRIM - SIDEWALL/LOWER - MITERED ENDS - 9.6" - B/W
5	148759-94-01A	EA	TRIM - SIDEWALL/LOWER - MITERED ENDS - 6.5" - B/W
6	127848-01-01A	EA	TRIM - WHEELWELL - BRIGHT WHITE
7	148759-95-01A	EA	TRIM - SIDEWALL/LOWER - MITERED ENDS - 14.5" - B/W
8	148760-40-01A	EA	TRIM - ROCKER - NOTCHED - 99.6" - BRIGHT WHITE
9	148759-96-01A	EA	TRIM - SIDEWALL/LOWER - MITERED ENDS - 15.3" - B/W
10	148759-80-01A	EA	TRIM - SIDEWALL/LOWER - MITERED ENDS - 7.2"

COPYRIGHT © 2006 WINNEBAGO INDUSTRIES INC.

EXTERIOR BODY GROUP (CONTINUED)

PANELS & TRIMS (CONTINUED)

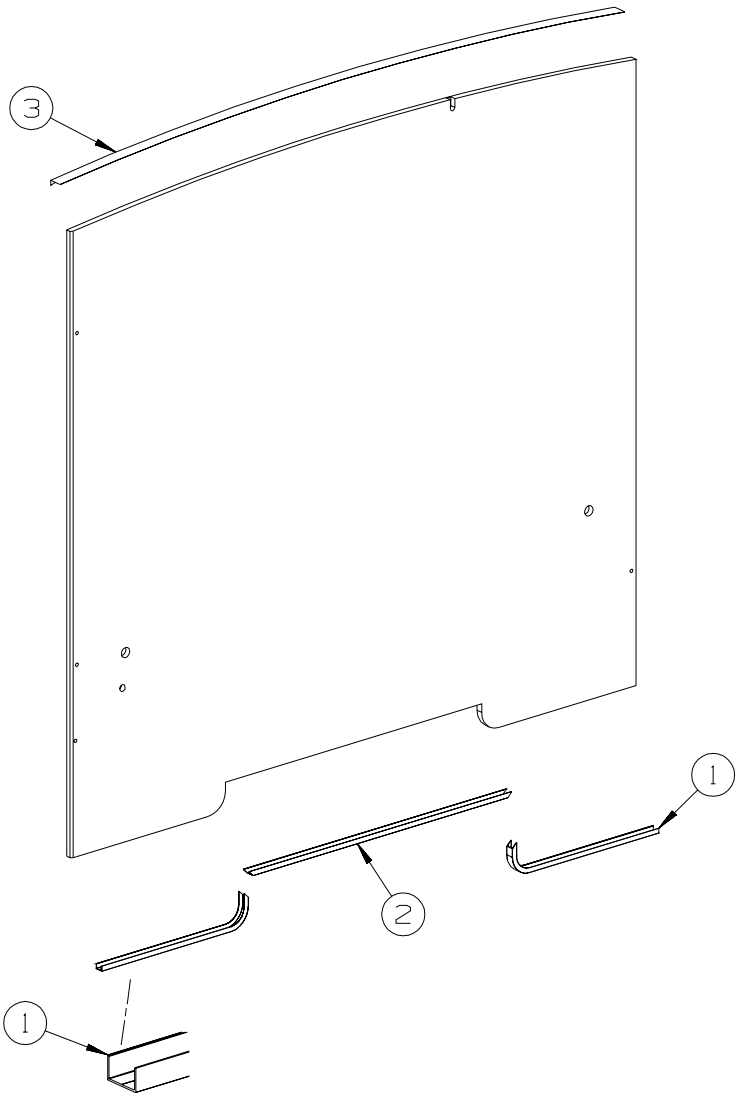

BACKWALL

KEY	PART NUMBER	U/M	DESCRIPTION
1	103334-03-02A	EA	TRIM - BACKWALL - LOWER/DRIVER/PASSENGER - 25.6" - BRT WHT FROM: 00-00-00 THRU: 07-31-05
1	156623-01-02A	EA	TRIM - BACKWALL/LOWER - 27" - BRIGHT WHITE FROM: 08-01-05 THRU: 99-99-99
2	103335-02-02A	EA	TRIM - BACKWALL - LOWER/CENTER - 46.3" - BRIGHT WHITE
3	114248-02-01A	EA	ANGLE - PLASTIC - .7" X .4" X 96.7" - MODERN IVORY

COMPONENT PARTS FOR PANELS & TRIMS

072884-27-000

KEY	PART NUMBER	U/M	DESCRIPTION	VENDOR NO.
	072884-27-700	EA	BRACKET SET 12" 92	RB2BRK/M
	072884-27-701	EA	RUNNING BOARD-FORD 39",RT&LT	
	072884-27-702	FT	TREAD TAPE	RB9202
	072884-27-703	EA	MUD FLAP W/HOLES, 1EA=PAIR	99171
	072884-27-704	EA	CAP-ENDS, 1EA=PAIR	99148

072884-28-000

KEY	PART NUMBER	U/M	DESCRIPTION	VENDOR NO.
	072884-27-704	EA	CAP-ENDS, 1EA=PAIR	99148
	072884-28-700	EA	RUNNING BOARD W/BRKTS RT/LT	15543
	072884-28-701	EA	MUD FLAP - FRONT - 1EA=PAIR	99153
	072884-28-702	EA	BRACKET SET - COMPLETE	206771

COPYRIGHT © 2006 WINNEBAGO INDUSTRIES INC.

EXTERIOR BODY GROUP (CONTINUED)

COMPONENT PARTS FOR PANELS & TRIMS (CONTINUED)

133908-01 THRU 133908-08, 133908-10 THRU 133908-13, 133908-16, 133908-17, -01A/-02A/-03A

KEY	PART NUMBER	U/M	DESCRIPTION	VENDOR NO.
	117051-01-700	EA	MIRROR-CONVEX	723068-4
	120269-05-701	EA	GLASS-HTD/REM RH/LH W/CONVEX	709411
	133908-03-700	EA	CAP - RECT/BLACK-W/O LIGHT	709557
	133908-04-700	EA	CAP-MIRROR/ROUND - W/O LIGHT	7095470

133908-09-01A

KEY	PART NUMBER	U/M	DESCRIPTION	VENDOR NO.
	133908-09-700	EA	SWITCH-MIRROR HEATER	7475150

STRUCTURAL COMPONENTS

KEY	PART NUMBER	U/M	DESCRIPTION
	002365-03-006	EA	U-CHANNEL - EXTRUDED - 1" X 192" - BRIGHT WHITE
	002726-01-001	EA	GARNISH - U-CHANNEL - 1.38" X 19' - SERRATED
	002766-01-001	EA	ANGLE - EXTRUDED - 1" X 1 1/2" X 17'
	076054-AC-000	EA	FIBERGLASS SHEET - 20" X 99.8" - OFF WHITE
	108535-05-03A	SF	FIBERGLASS SHEET - 108" X 500' ROLL - BRIGHT WHITE
	148884-02-01A	EA	FIBERGLASS SHEET - 96.7" X 355.7" -HIGH GLOSS-BRIGHT WHITE FROM: 00-00-00 THRU: 02-26-06
	159631-02-01A	EA	FIBERGLASS SHEET - 96.7" X 355.7" - BRIGHT WHITE FROM: 02-27-06 THRU: 99-99-99
	148884-04-01A	EA	FIBERGLASS SHEET - 99.5" X 100.2" -HIGH GLOSS-BRIGHT WHITE FROM: 00-00-00 THRU: 02-26-06
	159631-04-01A	EA	FIBERGLASS SHEET - 99.5" X 100.2" - BRIGHT WHITE FROM: 02-27-06 THRU: 99-99-99
	148884-07-01A	EA	FIBERGLASS SHEET - 56.4" X 99.8" - HIGH GLOSS-BRIGHT WHITE FROM: 00-00-00 THRU: 02-26-06
	159631-06-01A	EA	FIBERGLASS SHEET - 56.4" X 99.8" - BRIGHT WHITE FROM: 02-27-06 THRU: 99-99-99
	148884-08-01A	EA	FIBERGLASS SHEET - 27.4" X 65.8" - HIGH GLOSS-BRIGHT WHITE FROM: 00-00-00 THRU: 02-26-06
	148884-10-01A	EA	FIBERGLASS SHEET - 22.1" X 68.2" - HIGH GLOSS-BRIGHT WHITE FROM: 00-00-00 THRU: 02-26-06
	148884-12-01A	EA	FIBERGLASS SHEET - 31.1" X 68.2" - HIGH GLOSS-BRIGHT WHITE FROM: 00-00-00 THRU: 02-26-06
	159631-10-01A	EA	FIBERGLASS SHEET - 31.1" X 68.2" - BRIGHT WHITE FROM: 02-27-06 THRU: 99-99-99
	148884-20-01A	EA	FIBERGLASS SHEET - 4" X 93.8" - HIGH GLOSS - BRIGHT WHITE
	089297-01-000	SF	PLYWOOD - LUAN - OVERLAY GRADE - 4' X 8'
	089297-02-000	SF	PLYWOOD - LUAN - OVERLAY GRADE - 4' X 9'
	089297-03-000	SF	PLYWOOD - LUAN - OVERLAY GRADE - 4' X 8.3'
	100619-01-000	BF	FOAM - EXPANDED POLYSTYRENE - 1.34" X 48" X 96"
	100619-02-000	BF	FOAM - EXPANDED POLYSTYRENE - 1.5" X 48" X 96"
	100619-04-000	BF	FOAM - EXPANDED POLYSTYRENE - .5" X 48" X 96"
	100619-05-000	BF	FOAM - EXPANDED POLYSTYRENE - .75" X 48" X 96"-1.5"DENSITY
	100619-16-000	BF	FOAM - EXPANDED POLYSTYRENE - .75" X 48" X 96"-2" DENSITY
	100619-22-000	BF	FOAM - EXPANDED POLYSTYRENE - 1.34" X 48" X 120"
	100619-27-000	BF	FOAM - EXPANDED POLYSTYRENE - 3" X 48" X 92.8" FROM: 05-09-05 THRU: 99-99-99
	105077-10-000	EA	FOAM - PLUG - ROOF CAP
	120107-07-000	EA	FOAM - ROOF COVE FROM: 00-00-00 THRU: 05-11-05
	120107-01-000	EA	FOAM - ROOF COVE - 2.8" X 48" LONG FROM: 05-12-05 THRU: 99-99-99
	152490-01-000	EA	FOAM - PLUG - ROOF TUBE FROM: 00-00-00 THRU: 05-11-05
	120107-02-000	EA	FOAM - PLUG - ROOF TUBE - 2.2" X 2.9" X 1.8" LONG FROM: 05-12-05 THRU: 99-99-99
	120107-03-000	EA	FOAM - PLUG - SIDEWALL TUBE - 1.2" X 2.1" X 1.8" LONG FROM: 05-12-05 THRU: 99-99-99
	116942-03-01A	LB	ALUMINUM - .7" X 40" X 158"

COPYRIGHT © 2006 WINNEBAGO INDUSTRIES INC.

OUTLOOK PATIO AWNINGS

MODEL	COLOR DESIGNATION	AWNING FABRIC	AWNING LENGTH	WEATHER WRAP(MANUAL)	PART # MANUAL	VENDOR
322E	FAWN (EA)	VINYL	11.5'	VYL/BRT WHT	113874-03-53A	A&E
322R	FAWN (EA)	VINYL	11.5'	VYL/BRT WHT	113874-03-53A	A&E
324V	FAWN (EA)	VINYL	11.5'	VYL/BRT WHT	113874-03-53A	A&E
325F	FAWN (EA)	VINYL	11.5'	VYL/BRT WHT	113874-03-53A	A&E
326A	FAWN (EA)	VINYL	18'	VYL/BRT WHT	113874-07-53A	A&E
327L	FAWN (EA)	VINYL	18'	VYL/BRT WHT	113874-07-53A	A&E
329B/SB	FAWN (EA)	VINYL	14'	VYL/BRT WHT	113874-05-53A	A&E
329K	FAWN (EA)	VINYL	14'	VYL/BRT WHT	113874-05-53A	A&E
331C/SC	FAWN (EA)	VINYL	16'	VYL/BRT WHT	113874-06-53A	A&E
331K	FAWN (EA)	VINYL	16'	VYL/BRT WHT	113874-06-53A	A&E
332G	FAWN (EA)	VINYL	16'	VYL/BRT WHT	113874-06-53A	A&E

KEY	PART NUMBER	U/M	DESCRIPTION
*	113874-01-02A	EA	HARDWARE KIT - AWNING - W/O STANDOFF BRACKET-BRIGHT WHITE
	113874-11-01A	EA	SCREW/LAG - AWNING - 1/4" X 1" STAINLESS STEEL
	113874-12-01A	EA	SCREW/LAG - AWNING - 1/4" X 2 3/4" STAINLESS STEEL
	127647-02-01A	EA	ROD/AWNING GUARD - ENTRY DOOR - 12.7" LONG
	137054-01-02A	EA	BRACKET - AWNING - BRIGHT WHITE
	127960-01-01A	EA	RETAINER - EYE - 3/8" - STAINLESS STEEL - 324V, 325F, 326A, 327L, 331C

***COMPONENT PARTS LISTED LATER IN THIS GROUP**

COPYRIGHT © 2006 WINNEBAGO INDUSTRIES INC.

EXTERIOR BODY GROUP (CONTINUED)

COMPONENT PARTS FOR AWNINGS

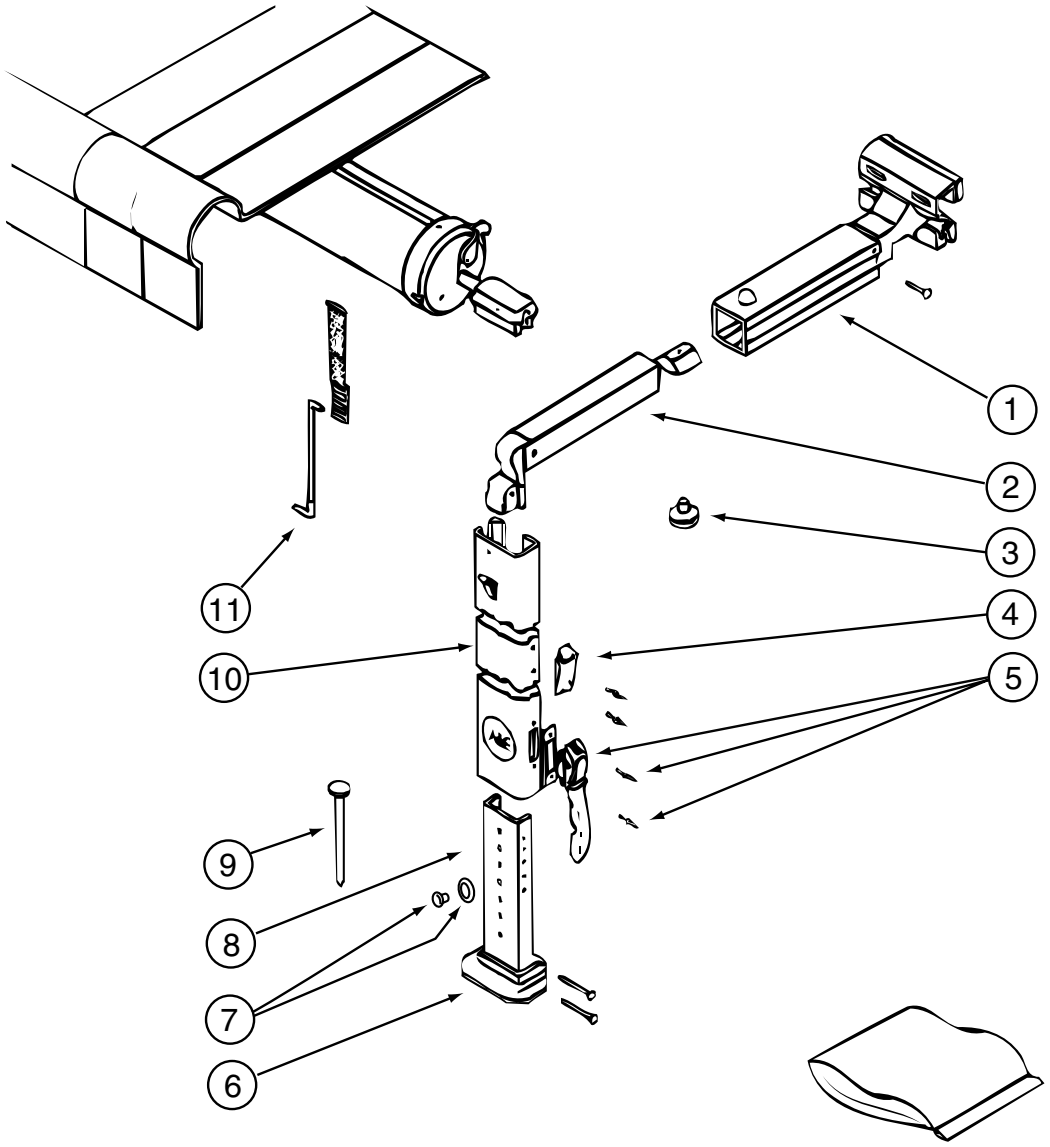

113874-01-02A

KEY	PART NUMBER	U/M	DESCRIPTION	VENDOR NO.
1	113874-01-714	EA	RAFTER - MAIN RH/LH BRT/WHT	830295.536F
2	113874-01-715	EA	RAFTER - SECONDARY BRT/WHT	830463.511F
3	113874-01-702	EA	KNOB - ADJUSTING	3105421.014
4	113874-01-706	EA	LOCK - TRAVEL	830587.001
5	113874-01-707	EA	HANDLE - LIFT W/RIVETS	830644
6	113874-01-712	EA	FOOT - PATIO	730366-001
7	113874-01-710	EA	PLUG-STOP KIT	830456
8	113874-01-717	EA	ARM - ADJUSTABLE BRT/WHT	830467.517/F
9	113874-01-709	EA	NAIL-SPIKE, 8"	113006
10	113874-01-716	EA	ARM - MAIN SUPPORT BRT/WHT	3104502.293/F
11	113874-01-703	EA	ROD-CENTER PULL W/ACCESSORY	830152.102

COPYRIGHT © 2006 WINNEBAGO INDUSTRIES INC.

EXTERIOR DOORS & COMPARTMENTS GROUP

DOOR & COMPARTMENT LAYOUT

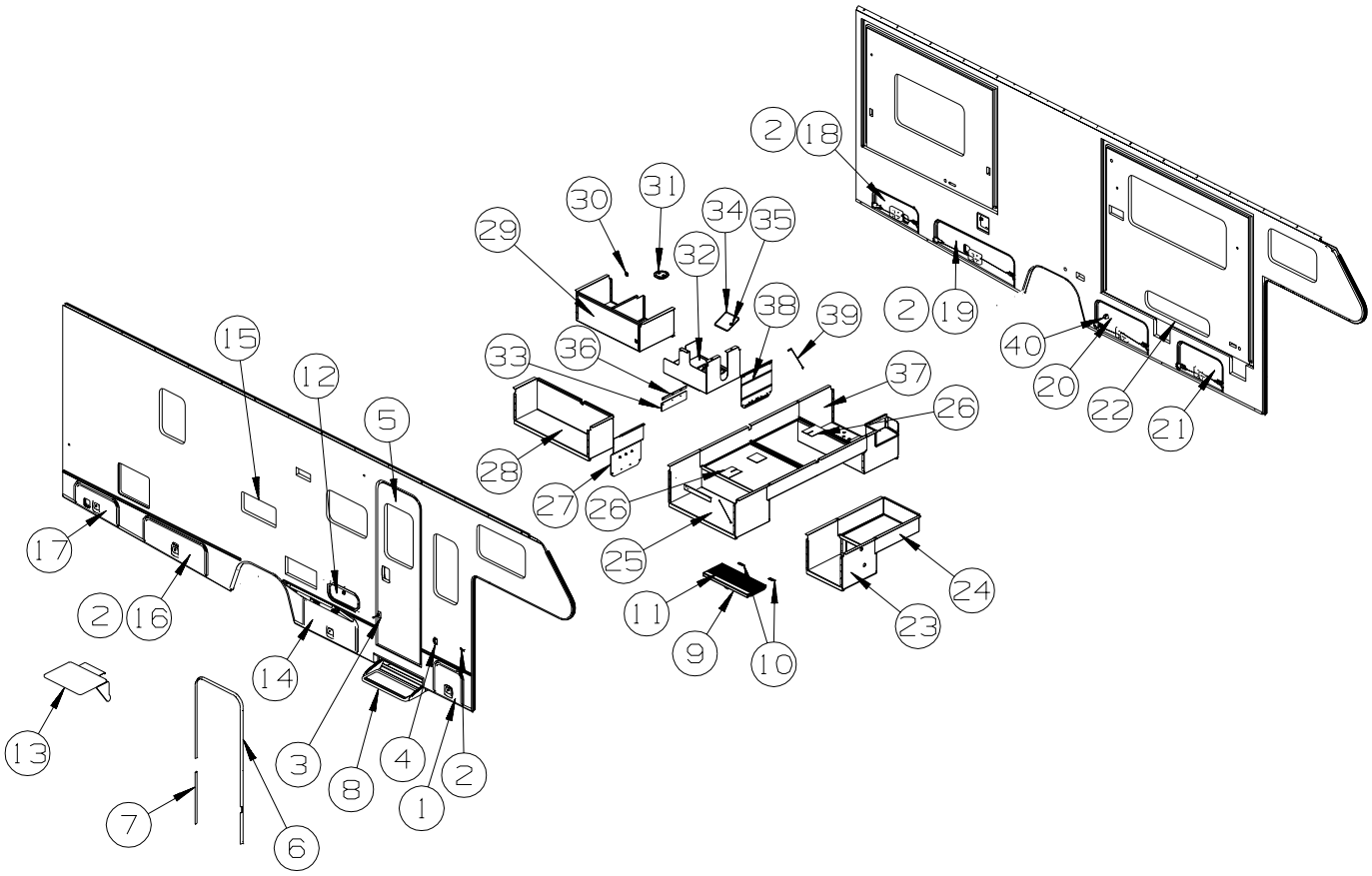

KEY	PART NUMBER	U/M	DESCRIPTION
1	148660-02-S01	EA	DOOR/STORAGE - W/O HDW/PADDLE LATCH - 16.7" X 16"
1	148660-02-AA1	EA	DOOR/STORAGE - W/O HDW/PADDLE LATCH - 16.7" X 16" - LOWER EXTERIOR PAINT
	150657-02-01B	EA	ROD/WIRE - LATCH
	150657-06-01B	EA	ROD/WIRE - LATCH
	056795-01-000	FT	TAPE-SEAL, 1/8" X 3/8" WIDE - PRESS ON
	107721-08-000	FT	SEAL - ACCESS DOOR - .9"WIDE X .9"HIGH
2	102768-01-000	EA	HOLDER - COMPARTMENT/ENTRY DOOR - METAL - MILL FINISH
3	104099-02-05A	EA	CATCH/RETAINER - DOOR HOLDER - BLACK
4	104099-03-04A	EA	CATCH - DOOR HOLDER - STRIKE - 6" - BRIGHT WHITE
5	P32206-18-T11	EA	DOOR - ENTRY W/SCREEN DOOR - W/O WINDOW/LATCH (T11, TK0)
5	P32206-18-T12	EA	DOOR - ENTRY W/SCREEN DOOR - W/O WINDOW/LATCH (T12, TK1)
5	P32206-18-T13	EA	DOOR - ENTRY W/SCREEN DOOR - W/O WINDOW/LATCH (T13, TK2)
ENTRY DOOR LOCK CYLINDERS			
	138287-11-000	EA	CYLINDER/LOCK - ENTRY DOOR - MASTER W/3M ICON - (3041)
	138287-12-000	EA	CYLINDER/LOCK - ENTRY DOOR - MASTER W/3M ICON - (3042)
	138287-13-000	EA	CYLINDER/LOCK - ENTRY DOOR - MASTER W/3M ICON - (3043)
	138287-14-000	EA	CYLINDER/LOCK - ENTRY DOOR - MASTER W/3M ICON - (3044)
	138287-15-000	EA	CYLINDER/LOCK - ENTRY DOOR - MASTER W/3M ICON - (3045)
	138287-16-000	EA	CYLINDER/LOCK - ENTRY DOOR - MASTER W/3M ICON - (3046)
	138287-17-000	EA	CYLINDER/LOCK - ENTRY DOOR - MASTER W/3M ICON - (3047)
	138287-18-000	EA	CYLINDER/LOCK - ENTRY DOOR - MASTER W/3M ICON - (3048)
	138287-19-000	EA	CYLINDER/LOCK - ENTRY DOOR - MASTER W/3M ICON - (3049)
	138287-20-000	EA	CYLINDER/LOCK - ENTRY DOOR - MASTER W/3M ICON - (3050)
	138288-11-000	EA	KEY - REVERSIBLE - #3041 - T/M 16169-02-3041
	138288-12-000	EA	KEY - REVERSIBLE - #3042 - T/M 16169-02-3042
	138288-13-000	EA	KEY - REVERSIBLE - #3043 - T/M 16169-02-3043
	138288-14-000	EA	KEY - REVERSIBLE - #3044 - T/M 16169-02-3044
	138288-15-000	EA	KEY - REVERSIBLE - #3045 - T/M 16169-02-3045
	138288-16-000	EA	KEY - REVERSIBLE - #3046 - T/M 16169-02-3046
	138288-17-000	EA	KEY - REVERSIBLE - #3047 - T/M 16169-02-3047
	138288-18-000	EA	KEY - REVERSIBLE - #3048 - T/M 16169-02-3048
	138288-19-000	EA	KEY - REVERSIBLE - #3049 - T/M 16169-02-3049
	138288-20-000	EA	KEY - REVERSIBLE - #3050 - T/M 16169-02-3050
	138292-01-000	EA	SEAL - LOCK CYLINDER

COPYRIGHT © 2006 WINNEBAGO INDUSTRIES INC.

EXTERIOR DOORS & COMPARTMENTS GROUP (CONTINUED)

DOOR & COMPARTMENT LAYOUT (CONTINUED)

KEY	PART NUMBER	U/M	DESCRIPTION
VALANCE DOOR, WATER FILL & FUEL FILL DOOR LOCK CYLINDERS			
	138289-11-000	EA	CYLINDER/LOCK - ACCESS DOORS - REDUCED SENSITIVITY (3041)
	138289-12-000	EA	CYLINDER/LOCK - ACCESS DOORS - REDUCED SENSITIVITY (3042)
	138289-13-000	EA	CYLINDER/LOCK - ACCESS DOORS - REDUCED SENSITIVITY (3043)
	138289-14-000	EA	CYLINDER/LOCK - ACCESS DOORS - REDUCED SENSITIVITY (3044)
	138289-15-000	EA	CYLINDER/LOCK - ACCESS DOORS - REDUCED SENSITIVITY (3045)
	138289-16-000	EA	CYLINDER/LOCK - ACCESS DOORS - REDUCED SENSITIVITY (3046)
	138289-17-000	EA	CYLINDER/LOCK - ACCESS DOORS - REDUCED SENSITIVITY (3047)
	138289-18-000	EA	CYLINDER/LOCK - ACCESS DOORS - REDUCED SENSITIVITY (3048)
	138289-19-000	EA	CYLINDER/LOCK - ACCESS DOORS - REDUCED SENSITIVITY (3049)
	138289-20-000	EA	CYLINDER/LOCK - ACCESS DOORS - REDUCED SENSITIVITY (3050)
6	139100-02-01A	EA	GARNISH/RADIUS - ENTRY DOOR - BRIGHT WHITE
7	139101-02-01A	EA	GARNISH/STRAIGHT - 35.31" - W/O NOTCHES - BRIGHT WHITE
8	139748-03-04B	EA	STEP/PULLOUT - W/BRACKETS - BLACK
	102569-04-000	EA	MAT - ANTI SLIP
8*	094708-03-01A	EA	STEP - ELECTRIC - SINGLE - BLACK CONTROL BOX - KWIKEE
			FROM: 00-00-00 THRU: 08-07-05
8*	094708-05-01A	EA	STEP - ELECTRIC - SINGLE - BLACK - KWIKEE
			FROM: 08-08-05 THRU: 99-99-99
9	147781-01-01A	EA	TREAD/STEP - RUBBER - TAUPE
	116975-01-01A	EA	LATCH - W/O STRIKE - BLACK - NEW STYLE
	064075-07-000	EA	SEAL - BULB - W/WIRED U CHANNEL - .3" X .5" CHANNEL-BLACK
10	146747-01-02B	EA	BRACKET/CATCH - E-COATED
11	133114-03-01A	EA	TREAD - STEP/RUBBER - 27.1" X 10.1" - TAUPE
12	126945-09-N42	EA	DOOR/STORAGE - W/O HARDWARE - 18.3" X 9.9"
13	142034-01-01A	EA	SHELF - F/EXTERIOR TV - BRIGHT WHITE
14	148660-12-S01	EA	DOOR/STORAGE - W/O HDW/PADDLE LATCH - 31.3" X 15.8"
14	148660-12-AA1	EA	DOOR/STORAGE - W/O HDW/PADDLE LATCH - 31.3" X 15.8" - LOWER EXTERIOR PAINT
	150657-40-01B	EA	ROD/WIRE - LATCH
	150657-41-01B	EA	ROD/WIRE - LATCH
	155346-04-04B	EA	PROP ROD - 15.3" - BLACK
			FROM: 02-12-05 THRU: 99-99-99
	101667-04-000	EA	PROP ROD - 15.4"
			FROM: 00-00-00 THRU: 02-11-05
	155346-04-04B	EA	PROP ROD - 15.3" - BLACK
			FROM: 02-12-05 THRU: 99-99-99
	076767-05-000	EA	CABLE - STAINLESS STEEL - 15.5"
	056795-01-000	FT	TAPE-SEAL, 1/8" X 3/8" WIDE - PRESS ON
	107721-08-000	FT	SEAL - ACCESS DOOR - .9"WIDE X .9"HIGH
15*	084103-08-000	EA	DOOR - VENT - REFRIGERATOR - W/O JAMB - BRIGHT WHITE
15	084104-08-000	EA	JAMB - VENT DOOR/REFRIGERATOR - BRIGHT WHITE
16	148661-23-S01	EA	DOOR/STORAGE - PASS W/O HDW/LATCH - 15" X 36.8" X 13.1"
16	148661-23-AA1	EA	DOOR/STORAGE - PASS W/O HDW/LATCH - 15" X 36.8" X 13.1" - LOWER EXTERIOR PAINT
	150657-19-01B	EA	ROD/WIRE - LATCH
	150657-21-01B	EA	ROD/WIRE - LATCH
	101667-04-000	EA	PROP ROD - 15.4"
			FROM: 00-00-00 THRU: 02-11-05
	155346-04-04B	EA	PROP ROD - 15.3" - BLACK
			FROM: 02-12-05 THRU: 99-99-99
	056795-01-000	FT	TAPE-SEAL, 1/8" X 3/8" WIDE - PRESS ON
	107721-08-000	FT	SEAL - ACCESS DOOR - .9"WIDE X .9"HIGH
17	148661-24-S01	EA	DOOR/STORAGE - PASS W/O HDW/LATCH - 12.3" X 25.3" X 10.9"
17	148661-24-AA1	EA	DOOR/STORAGE - PASS W/O HDW/LATCH - 12.3" X 25.3" X 10.9" - LOWER EXTERIOR PAINT
	150657-10-01B	EA	ROD/WIRE - LATCH
	150657-13-01B	EA	ROD/WIRE - LATCH
	155346-03-04B	EA	PROP ROD - 10.6" - BLACK
			FROM: 02-12-05 THRU: 99-99-99
	056795-01-000	FT	TAPE-SEAL, 1/8" X 3/8" WIDE - PRESS ON
	107721-08-000	FT	SEAL - ACCESS DOOR - .9"WIDE X .9"HIGH

COPYRIGHT © 2006 WINNEBAGO INDUSTRIES INC.

EXTERIOR DOORS & COMPARTMENTS GROUP (CONTINUED)

DOOR & COMPARTMENT LAYOUT (CONTINUED)

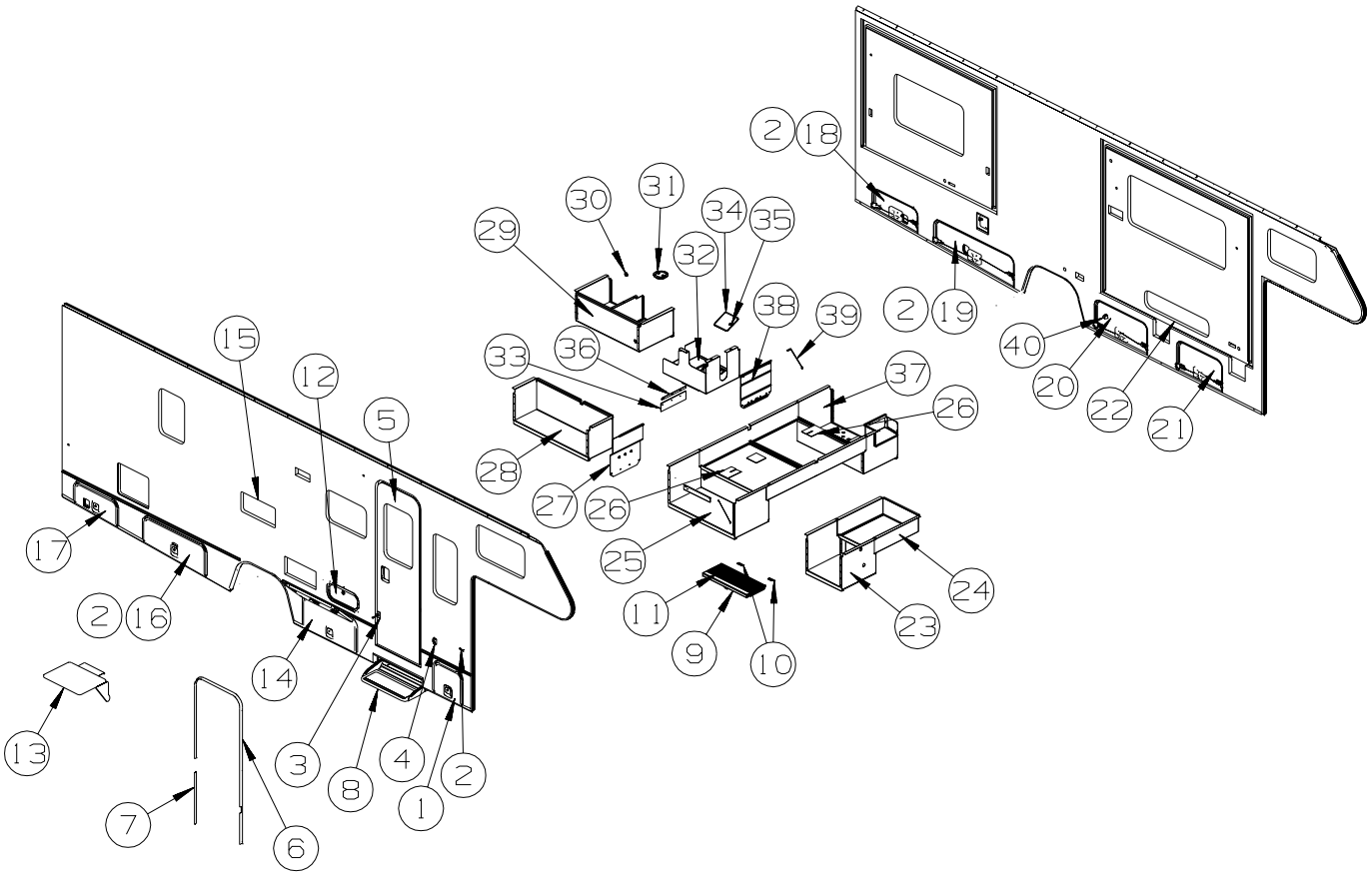

KEY	PART NUMBER	U/M	DESCRIPTION
18	148661-22-S01	EA	DOOR/STORAGE - DRVR W/O HDW/LATCH - 12.5" X 26.9" X 11.1"
18	148661-22-AA1	EA	DOOR/STORAGE - DRVR W/O HDW/LATCH - 12.5" X 26.9" X 11.1" - LOWER EXTERIOR PAINT
	150657-11-01B	EA	ROD/WIRE - LATCH
	150657-15-01B	EA	ROD/WIRE - LATCH
	107721-08-000	FT	SEAL - ACCESS DOOR - .9"WIDE X .9"HIGH
19	148661-21-S01	EA	DOOR/STORAGE - DRVR W/O HDW/LATCH - 15.5" X 47.3" X 13"
19	148661-21-AA1	EA	DOOR/STORAGE - DRVR W/O HDW/LATCH - 15.5" X 47.3" X 13" - LOWER EXTERIOR PAINT
	150657-25-01B	EA	ROD/WIRE - LATCH
	150657-27-01B	EA	ROD/WIRE - LATCH
	056795-01-000	FT	TAPE-SEAL, 1/8" X 3/8" WIDE - PRESS ON
	107721-08-000	FT	SEAL - ACCESS DOOR - .9"WIDE X .9"HIGH
20	148660-12-S01	EA	DOOR/STORAGE - W/O HDW/PADDLE LATCH - 31.3" X 15.8"
20	148660-12-AA1	EA	DOOR/STORAGE - W/O HDW/PADDLE LATCH - 31.3" X 15.8" - LOWER EXTERIOR PAINT
	150657-40-01B	EA	ROD/WIRE - LATCH
	150657-41-01B	EA	ROD/WIRE - LATCH
	155346-04-04B	EA	PROP ROD - 15.3" - BLACK
			FROM: 02-12-05 THRU: 99-99-99
	101667-04-000	EA	PROP ROD - 15.4"
			FROM: 00-00-00 THRU: 02-11-05
	155346-04-04B	EA	PROP ROD - 15.3" - BLACK
			FROM: 02-12-05 THRU: 99-99-99
	056795-01-000	FT	TAPE-SEAL, 1/8" X 3/8" WIDE - PRESS ON
	107721-08-000	FT	SEAL - ACCESS DOOR - .9"WIDE X .9"HIGH

COPYRIGHT © 2006 WINNEBAGO INDUSTRIES INC.

EXTERIOR DOORS & COMPARTMENTS GROUP (CONTINUED)

DOOR & COMPARTMENT LAYOUT (CONTINUED)

KEY	PART NUMBER	U/M	DESCRIPTION
21	148660-15-S01	EA	DOOR/STORAGE - W/O HDW/PADDLE LATCH - 26.9" X 15.8"
21	148660-15-AA1	EA	DOOR/STORAGE - W/O HDW/PADDLE LATCH - 26.9" X 15.8" - LOWER EXTERIOR PAINT
	150657-11-01B	EA	ROD/WIRE - LATCH
	150657-15-01B	EA	ROD/WIRE - LATCH
	155346-04-04B	EA	PROP ROD - 15.3" - BLACK
			FROM: 02-12-05 THRU: 99-99-99
	101667-03-000	EA	PROP ROD - 11.2"
			FROM: 00-00-00 THRU: 02-11-05
	155346-03-04B	EA	PROP ROD - 10.6" - BLACK
			FROM: 02-09-05 THRU: 99-99-99
	056795-01-000	FT	TAPE-SEAL, 1/8" X 3/8" WIDE - PRESS ON
	107721-08-000	FT	SEAL - ACCESS DOOR - .9"WIDE X .9"HIGH
22	126946-43-S34	EA	DOOR/STORAGE - W/O HARDWARE - 37.8" X 8.3"
	056795-01-000	FT	TAPE-SEAL, 1/8" X 3/8" WIDE - PRESS ON
	120863-05-000	EA	BUMPER - RUBBER/RADIUS TOP - 3/4" X 3/8"
23	137554-19-P07	EA	COMPARTMENT - LUGGAGE
24	061420-05-000	EA	PLUG/PLASTIC - 1 1/2" DIAMETER
25	137554-33-S01	EA	COMPARTMENT - LUGGAGE
26	153157-01-14B	EA	PLATE/SEAL - GALVANIZED
27	137828-01-02B	EA	PANEL - ROCKGUARD/LP - E-COATED
28	137554-34-S01	EA	COMPARTMENT - LUGGAGE
29	137554-35-S01	EA	COMPARTMENT - LUGGAGE
30	061420-10-000	EA	PLUG/PLASTIC - 1 1/2" DIAMETER - BLACK
31	092887-03-000	EA	HATCH/PLATE - 6.1" FLANGE/4.5" R.O. - BLACK
32	151472-02-02B	EA	COMPARTMENT - SEWER - E-COATED
33	017516-10-000	EA	MUD FLAP - 3.9"H X 14.9"W - RUBBER - BLACK
34	115870-01-00	FT	SEAL/EDGE - TRIM
35	153718-01-01A	EA	LATCH - HOLD DOWN PANEL - STAINLESS STEEL
36	140922-02-02B	EA	RETAINER - MUD FLAP - 1" X 14.5" - E-COATED
37	137554-36-S07	EA	COMPARTMENT - LUGGAGE
38	137554-36-S07	EA	COMPARTMENT - LUGGAGE
39	107865-02-000	EA	ROD - SUPPORT - VALANCE PANEL - 13.2"
40	131383-03-02A	EA	BRACKET - SHOWER HEAD - WHITE

***COMPONENT PARTS LISTED LATER IN THIS GROUP**

COPYRIGHT © 2006 WINNEBAGO INDUSTRIES INC.

EXTERIOR DOORS & COMPARTMENTS GROUP (CONTINUED)

COMPONENT PARTS FOR DOOR & COMPARTMENT LAYOUT

084103-08-000

KEY	PART NUMBER	U/M	DESCRIPTION	VENDOR NO.
	084104-01-700	EA	LOCK-MALE, FASTENER	201-721-010
	084104-01-701	EA	LOCK-FEMALE, FASTENER	201-802-010

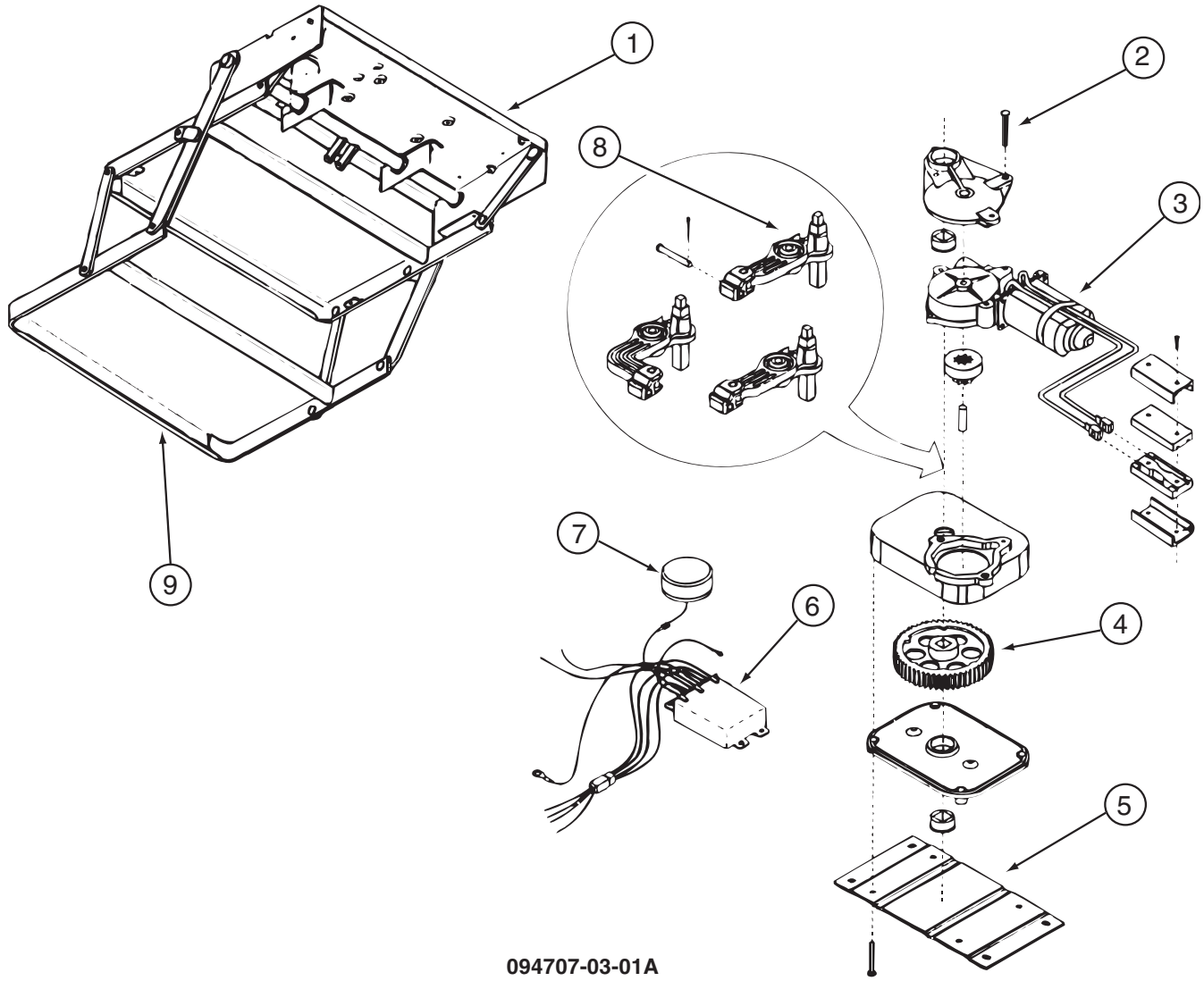

094707-03-01A

KEY	PART NUMBER	U/M	DESCRIPTION	VENDOR NO.
1	094707-01-702	EA	FRAME W/DBL STEP,3200 SERIES	908032
2	094707-02-703	EA	BEARING & PINS	909530
3	094707-02-700	EA	MOTOR - “UT” ASM W/BRGS/PIN	909520
4	094707-02-702	EA	GEAR KIT(GEAR-BEARING-PINS)	909525
5	094707-02-704	EA	CONNECTOR-MOTOR ASM.W/PLATES	909537
6	094707-03-700	EA	KIT CONTROL/SWITCH-RETROFIT	909506005
7	088746-01-705	EA	LIGHT-UNDER STEP	9004
7	088733-01-700	EA	BULB	9004
8	094707-02-701	EA	LINKAGE ASM. W/BEARINGS-PINS	909534
9	094707-02-707	EA	TREAD - NON-SKID - BLACK	909333
	094707-02-706	EA	GEAR BOX ASM. W/O MOTOR	9524
	094707-02-708	EA	TREAD - NON-SKID - YELLOW	909331
	094707-03-701	EA	PLUG - 4-WAY - PACKARD	909306

COPYRIGHT © 2006 WINNEBAGO INDUSTRIES INC.

EXTERIOR DOORS & COMPARTMENTS GROUP (CONTINUED)

COMPONENT PARTS FOR DOOR & COMPARTMENT LAYOUT (CONTINUED)

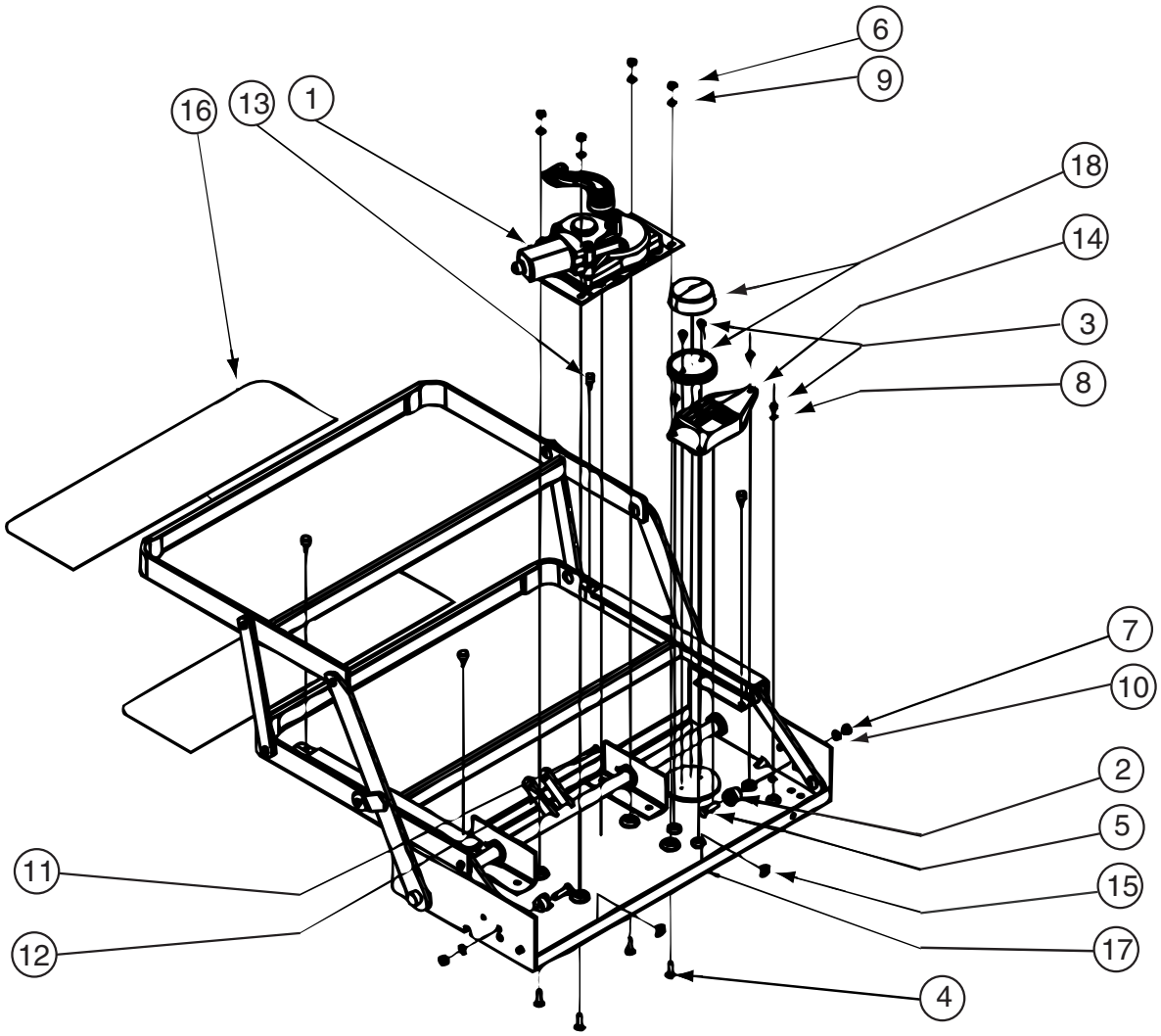

094707-04-01A

KEY	PART NUMBER	U/M	DESCRIPTION	VENDOR NO.
1	094707-04-701	EA	MOTOR “AM 214” F/IMGL STEPS	1101428
1	094707-04-703	EA	GEAR BOX W/LINKAGE-CURVED	1101425
2	143709-01-700	EA	CAM STOP	1102200
12	094707-04-702	EA	COTTOR PIN - W/CLEVIS PIN	905205000
13	143709-01-701	EA	BUMPER - BLACK (RUBBER STOP)	1602000
14	094707-04-700	EA	CONTROL UNIT W/OVERRIDE	909510000
16	143709-01-702	EA	TREAD/NON-SKID 6” X 21” BLK	1915260
17	094707-04-704	EA	FRAME W/DBL STEP-32REINF SRS	3202082
18	088746-01-705	EA	LIGHT-UNDER STEP	9004
	094707-03-701	EA	PLUG - 4-WAY - PACKARD	909306
	094707-04-711	EA	KWIKTEST - W/4-WAY PIGTAIL	909518000
			CONTACT WINNEBAGO PART SALES FOR UNLISTED COMPONENT(S)	

COPYRIGHT © 2006 WINNEBAGO INDUSTRIES INC.

EXTERIOR DOORS & COMPARTMENTS GROUP (CONTINUED)

COMPONENT PARTS FOR DOOR & COMPARTMENT LAYOUT (CONTINUED)

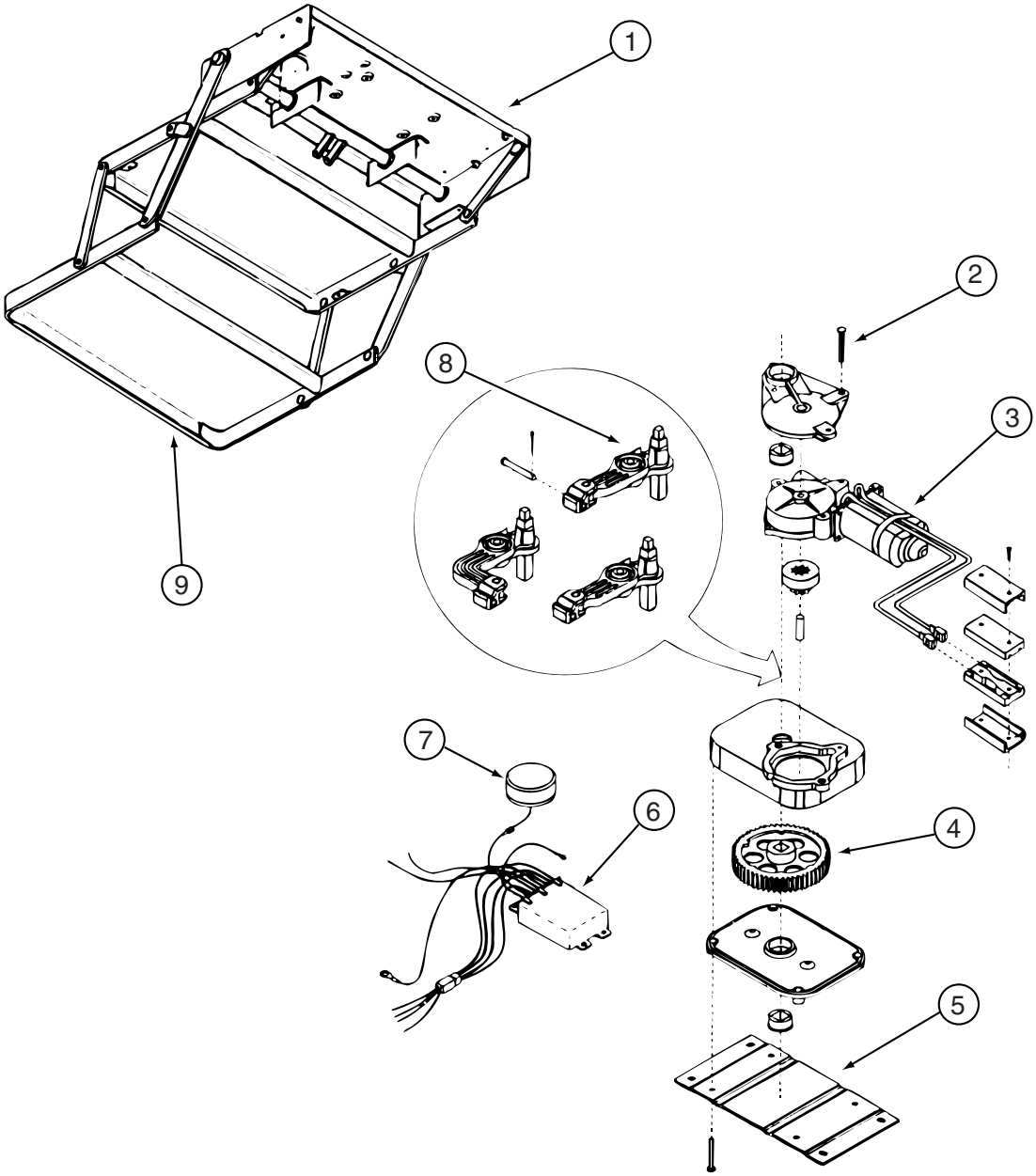

094708-03-01A

KEY	PART NUMBER	U/M	DESCRIPTION	VENDOR NO.
1	088746-01-709	EA	FRAME W/SGL STEP,2800 SERIES	908028
2	094707-02-703	EA	BEARING & PINS	909530
3	094707-02-700	EA	MOTOR ASM.,W/BEARINGS & PINS	909520
4	094707-02-702	EA	GEAR KIT(GEAR-BEARING-PINS)	909525
5	094707-02-704	EA	CONNECTOR-MOTOR ASM.W/PLATES	909537
6	094707-03-700	EA	KIT CONTROL/SWITCH-RETROFIT	909506005
7	088733-01-700	EA	BULB	9004
7	088746-01-705	EA	LIGHT-UNDER STEP	9004
8	094708-03-700	EA	LINKAGE ASSEMBLY-SERIES 28	909533
9	094707-02-707	EA	TREAD - NON-SKID - BLACK	909333
	094707-03-701	EA	PLUG - 4-WAY - PACKARD	909306

COPYRIGHT © 2006 WINNEBAGO INDUSTRIES INC.

EXTERIOR DOORS & COMPARTMENTS GROUP (CONTINUED)

COMPARTMENT DOOR PIECE PARTS

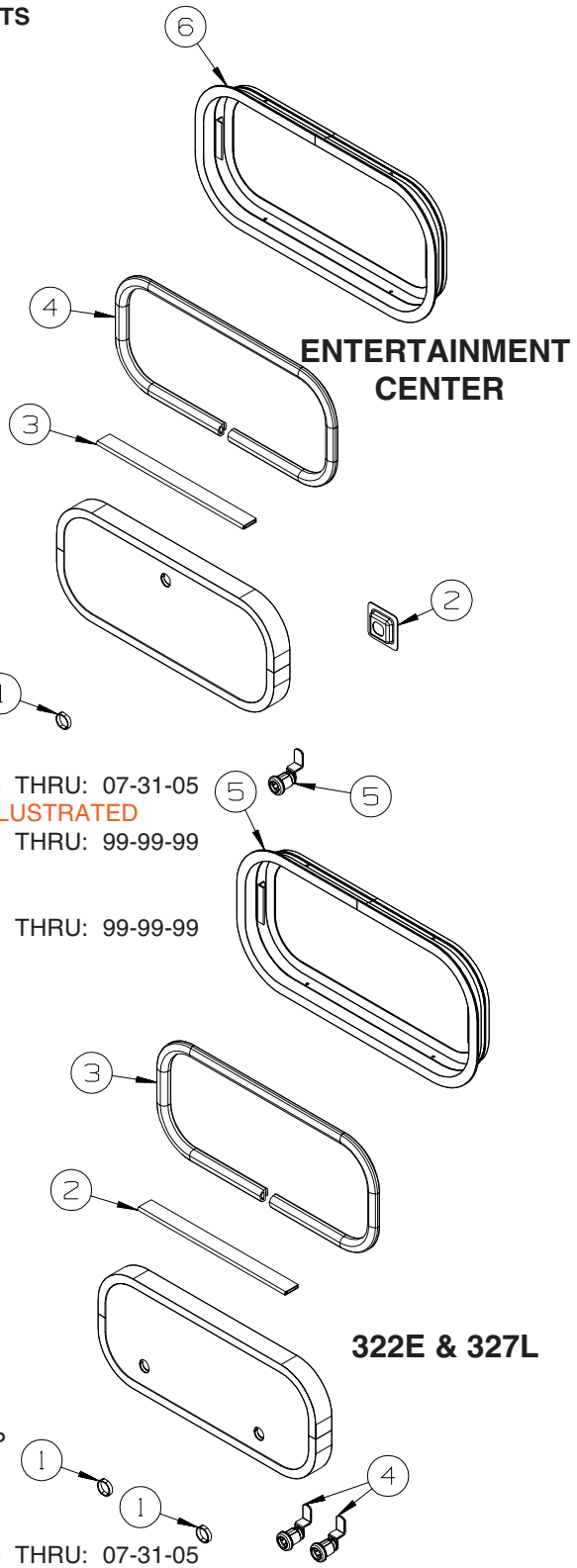

ENTERTAINMENT CENTER

KEY	PART NUMBER	U/M	DESCRIPTION
1	139325-01-000	EA	SPACER - LOCK - 6MM
	139337-01-000	EA	GASKET - LOCK
2	097111-02-04A	EA	POCKET - LOCK - REAR DOOR - BLACK
3	081801-FN-000	EA	HINGE - DOOR - PIANO - 2" X 96" - BLACK
3	081801-V3-000	EA	HINGE - DOOR - PIANO - 2" X 96" - BRIGHT WHITE
4	106850-02-000	FT	SEAL-E - SPONGE RUBBER - .43" X .75"
			FROM: 00-00-00 THRU: 07-31-05
4	156386-01-01A	FT	SEAL - BULB - .4" X .5" - W/ADHESIVE BACK - NOT ILLUSTRATED
			FROM: 08-01-05 THRU: 99-99-99
5	138290-02-000	EA	CASE - W/CAM - W/O CYLINDER/KEY
6	056795-01-000	FT	TAPE-SEAL, 1/8" X 3/8" WIDE - PRESS ON
			FROM: 09-26-05 THRU: 99-99-99

322E & 327L

KEY	PART NUMBER	U/M	DESCRIPTION
1	139325-01-000	EA	SPACER - LOCK - 6MM
1	144734-01-000	EA	SPACER - COMPARTMENT DOOR LOCK - 9/16" DEEP
	139337-01-000	EA	GASKET - LOCK
2	081801-V3-000	EA	HINGE - DOOR - PIANO - 2" X 96" - BRIGHT WHITE
3	106850-02-000	FT	SEAL-E - SPONGE RUBBER - .43" X .75"
			FROM: 00-00-00 THRU: 07-31-05
3	156386-01-01A	FT	SEAL - BULB - .4" X .5" - W/ADHESIVE BACK - NOT ILLUSTRATED
			FROM: 08-01-05 THRU: 99-99-99
	097111-02-05A	EA	POCKET - LOCK - REAR DOOR - BRIGHT WHITE
4*	110506-27-000	EA	LOCK - TWIST - 1.6" - TWIST LOCK
	110506-55-000	EA	CASE/CYLINDER -TWIST -W/O CAM -1.25" -597312AA1 - TWIST LOCK
	110506-66-000	EA	CAM - LATCHING - DOG LEG - 1.5" LONG - TWIST LOCK
4	138290-02-000	EA	CASE - W/CAM - W/O CYLINDER/KEY - KEYED LOCK
	144474-01-000	EA	ADAPTER - LOCK - 180 DEGREE - KEYED LOCK
	138637-63-000	EA	CAM - LATCHING - DOG LEG - 1.5" LONG - KEYED LOCK
5	056795-01-000	FT	TAPE-SEAL, 1/8" X 3/8" WIDE - PRESS ON
			FROM: 09-26-05 THRU: 99-99-99

***COMPONENT PARTS LISTED LATER IN THIS GROUP**

COPYRIGHT © 2006 WINNEBAGO INDUSTRIES INC.

EXTERIOR DOORS & COMPARTMENTS GROUP (CONTINUED)

COMPARTMENT DOOR PIECE PARTS (CONTINUED)

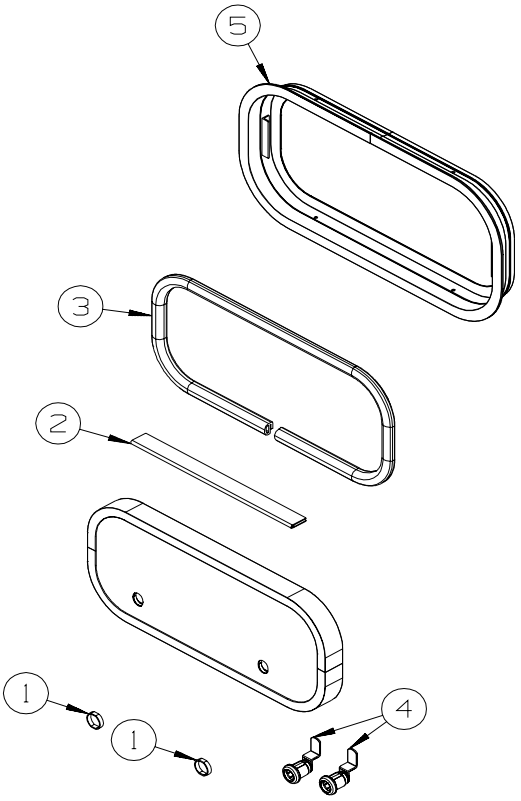

327L

KEY	PART NUMBER	U/M	DESCRIPTION
1	144734-01-000	EA	SPACER - COMPARTMENT DOOR LOCK - 9/16" DEEP
2	081801-V3-000	EA	HINGE - DOOR - PIANO - 2" X 96" - BRIGHT WHITE
2	081801-FN-000	EA	HINGE - DOOR - PIANO - 2" X 96" - BLACK
3	106850-02-000	FT	SEAL-E - SPONGE RUBBER - .43" X .75"
			FROM: 00-00-00 THRU: 07-31-05
3	156386-01-01A	FT	SEAL - BULB - .4" X .5" - W/ADHESIVE BACK - NOT ILLUSTRATED
			FROM: 08-01-05 THRU: 99-99-99
4*	110506-27-000	EA	LOCK - TWIST - 1.6" - TWIST LOCK
	110506-55-000	EA	CASE/CYLINDER -TWIST -W/O CAM -1.25" -597312AA1 - TWIST LOCK
	110506-66-000	EA	CAM - LATCHING - DOG LEG - 1.5" LONG - TWIST LOCK
4	138637-04-000	EA	LOCK ASM. - KEYED - 1.5" CASE (CYLINDER/CAM/HDWR PKG) - KEYED LOCK
	144474-01-000	EA	ADAPTER - LOCK - 180 DEGREE - KEYED LOCK
	138637-63-000	EA	CAM - LATCHING - DOG LEG - 1.5" LONG - KEYED LOCK
	138637-53-000	EA	CASE/CYLINDER - LOCKING - W/O CAM/KEY - 1.5"
	138637-53-001	EA	CASE/CYLINDER - LOCKING - W/O CAM/KEY - 1.5"
	138637-53-002	EA	CASE/CYLINDER - LOCKING - W/O CAM/KEY - 1.5"
	138637-53-003	EA	CASE/CYLINDER - LOCKING - W/O CAM/KEY - 1.5"
	138637-53-004	EA	CASE/CYLINDER - LOCKING - W/O CAM/KEY - 1.5"
	138637-53-005	EA	CASE/CYLINDER - LOCKING - W/O CAM/KEY - 1.5"
	138637-53-006	EA	CASE/CYLINDER - LOCKING - W/O CAM/KEY - 1.5"
	138637-53-007	EA	CASE/CYLINDER - LOCKING - W/O CAM/KEY - 1.5"
	138637-53-008	EA	CASE/CYLINDER - LOCKING - W/O CAM/KEY - 1.5"
	138637-53-009	EA	CASE/CYLINDER - LOCKING - W/O CAM/KEY - 1.5"
5	056795-01-000	FT	TAPE-SEAL, 1/8~ X 3/8~ WIDE - PRESS ON
			FROM: 09-26-05 THRU: 99-99-99

***COMPONENT PARTS LISTED LATER IN THIS GROUP**

COPYRIGHT © 2006 WINNEBAGO INDUSTRIES INC.

EXTERIOR DOORS & COMPARTMENTS GROUP (CONTINUED)

COMPARTMENT DOOR PIECE PARTS (CONTINUED)

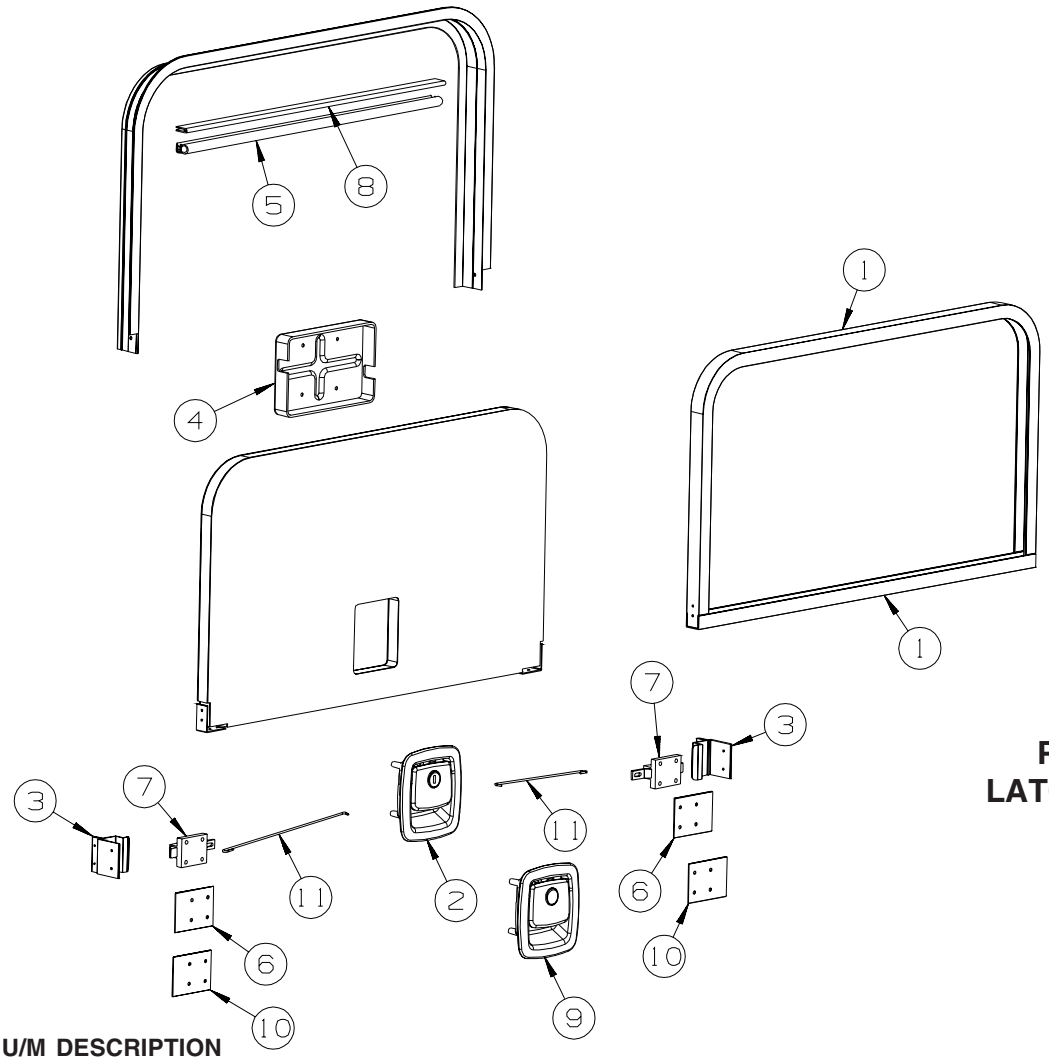

PADDLE LATCH DOORS

KEY	PART NUMBER	U/M	DESCRIPTION
1	096217-55-006	EA	U-CHANNEL - 210” - BRIGHT WHITE
1	096217-55-009	EA	U-CHANNEL - 210” - BLACK - LOWER EXTERIOR PAINT
2	138277-01-02A	EA	LATCH/PADDLE - COMPARTMENT DOOR - WHITE - KEY ONE - NOT ILLUSTRATED FROM: 00-00-00 THRU: 05-31-05
2	154900-01-02A	EA	LATCH/PADDLE - LOCKING - COMPT DOOR - KEY ONE - WHITE FROM: 06-01-05 THRU: 99-99-99
2	138277-01-01A	EA	LATCH/PADDLE - COMPT DOOR - BLK-KEY ONE - LOWER EXTERIOR PAINT - NOT ILLUSTRATED FROM: 00-00-00 THRU: 05-31-05
2	154900-01-01A	EA	LATCH/PADDLE - LOCKING - COMPT DOOR - KEY ONE - BLACK - LOWER EXTERIOR PAINT FROM: 06-01-05 THRU: 99-99-99
3	150789-01-S01	EA	STRIKER - STORAGE DOOR
4	122277-06-02A	EA	COVER - LATCH - WHITE
5	151104-01-01A	FT	SEAL - BULB - W/WIRED U CHANNEL - .3" X .5" CHANNEL-BLACK
6	121577-07-01A	EA	STRAP/PLATE - W/HOLE - 2.25" X 3" - BRIGHT WHITE
	035648-51-001	EA	STRAP - EXTRUSION - 2.25" X 80.6" FROM: 07-19-05 THRU: 08-06-05
7	149741-01-01A	EA	BOLT - SLIDE/LATCH
8	151229-06-01A	EA	HINGE - CONTINUOUS - 1.5" X 72.4" - BRIGHT WHITE
8	151229-06-02A	EA	HINGE - CONTINUOUS - 1.5" X 72.4" - BLACK - LOWER EXTERIOR PAINT
9	112949-02-04A	EA	LATCH/PADDLE - NON-LOCKING - BRIGHT WHITE - NOT ILLUSTRATED FROM: 00-00-00 THRU: 05-31-05
9	154900-02-02A	EA	LATCH/PADDLE - NON LOCKING - COMPT DOOR - WHITE FROM: 06-01-05 THRU: 99-99-99
9	112949-02-05A	EA	LATCH/PADDLE - NON-LOCKING - BLACK - LOWER EXTERIOR PAINT - NOT ILLUSTRATED FROM: 00-00-00 THRU: 05-31-05
9	154900-02-01A	EA	LATCH/PADDLE - NON LOCKING - COMPT DOOR - BLACK - LOWER EXTERIOR PAINT FROM: 06-01-05 THRU: 99-99-99
10	149738-01-01A	EA	SPACER - SLIDE BOLT
11	150150-01-000	EA	ROD - LATCH (BLANK) - 27.5" - STAINLESS STEEL

COPYRIGHT © 2006 WINNEBAGO INDUSTRIES INC.

EXTERIOR DOORS & COMPARTMENTS GROUP (CONTINUED)

COMPARTMENT DOOR PIECE PARTS (CONTINUED)

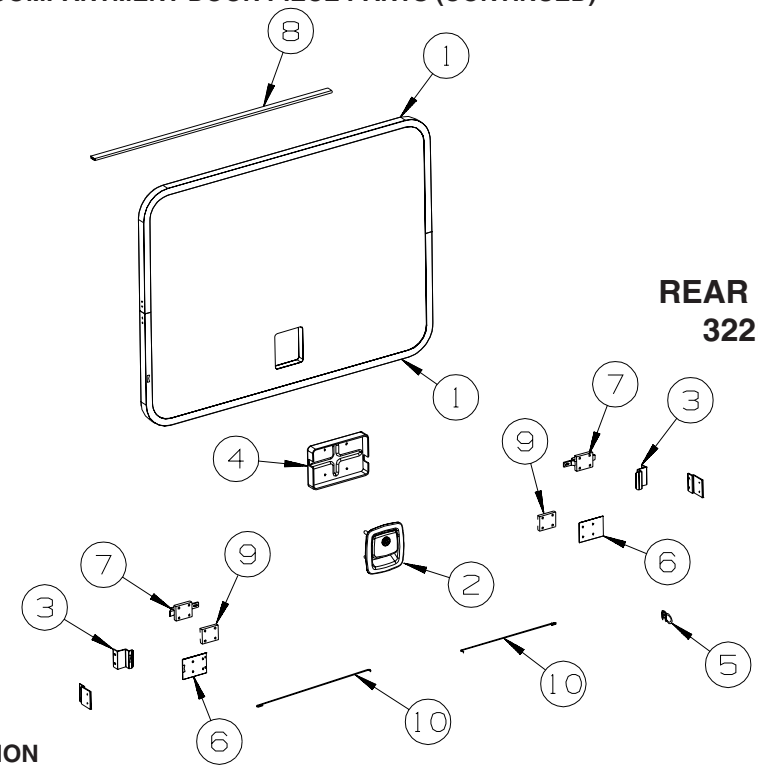

REAR PASSENGER SIDE
322R, 324V, & 326A

KEY	PART NUMBER	U/M	DESCRIPTION
1	096217-55-006	EA	U-CHANNEL - 210" - BRIGHT WHITE
2	138277-01-02A	EA	LATCH/PADDLE - COMPARTMENT DOOR - WHITE - KEY ONE - NOT ILLUSTRATED
			FROM: 00-00-00 THRU: 05-31-05
2	154900-01-02A	EA	LATCH/PADDLE - LOCKING - COMPT DOOR - KEY ONE - WHITE
			FROM: 06-01-05 THRU: 99-99-99
3	150789-01-S01	EA	STRIKER - STORAGE DOOR
4	122277-06-02A	EA	COVER - LATCH - WHITE
5	151104-01-01A	FT	SEAL - BULB - W/WIRED U CHANNEL - .3" X .5" CHANNEL-BLACK
6	121577-07-01A	EA	STRAP/PLATE - W/HOLE - 2.25" X 3" - BRIGHT WHITE
	035648-51-001	EA	STRAP - EXTRUSION - 2.25" X 80.6"
			FROM: 07-19-05 THRU: 08-06-05
7	149741-01-01A	EA	BOLT - SLIDE/LATCH
8	151229-06-01A	EA	HINGE - CONTINUOUS - 1.5" X 72.4" - BRIGHT WHITE
9	149738-01-01A	EA	SPACER - SLIDE BOLT
10	150150-01-000	EA	ROD - LATCH (BLANK) - 27.5" - STAINLESS STEEL

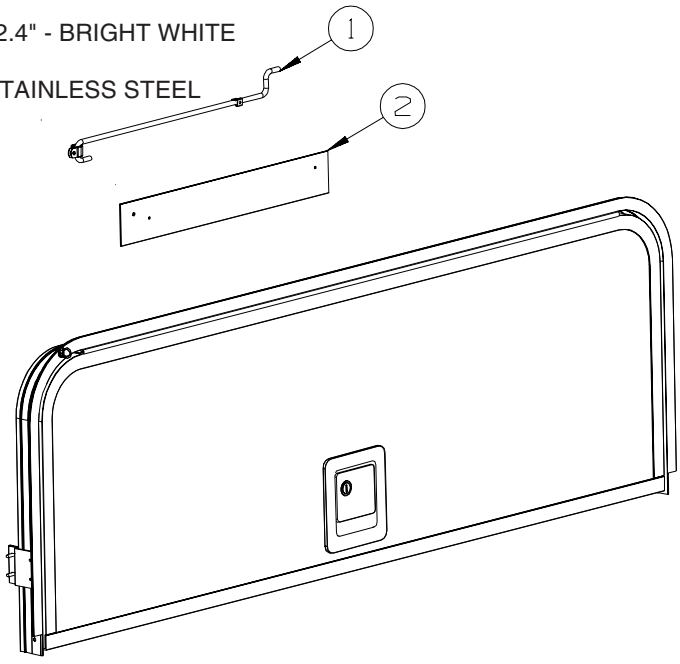

KEY	PART NUMBER	U/M	DESCRIPTION
1	155346-03-04B	EA	PROP ROD - 10.6" - BLACK
1	155346-04-04B	EA	PROP ROD - 15.3" - BLACK
1	155346-06-04B	EA	PROP ROD - 21" - BLACK
1	155346-07-04B	EA	PROP ROD - 17.3" - BLACK
2	121577-01-01A	EA	STRAP/PLATE - W/HOLE - 2.25" X 26" - BRIGHT WHITE
2	121577-02-01A	EA	STRAP/PLATE - W/HOLE - 2.25" X 11.8" - BRIGHT WHITE
2	121577-06-01A	EA	STRAP/PLATE - W/HOLE - 2.25" X 15.8" - BRIGHT WHITE
2	121577-08-01A	EA	STRAP/PLATE - W/HOLE - 2.25" X 10" - BRIGHT WHITE
	035648-51-001	EA	STRAP - EXTRUSION - 2.25" X 80.6"

COPYRIGHT © 2006 WINNEBAGO INDUSTRIES INC.

EXTERIOR DOORS & COMPARTMENTS GROUP (CONTINUED)

COMPONENT PARTS FOR COMPARTMENT DOOR PIECE PARTS

110506-A1-000, 110506-A2-000, 110506-26-000, 110506-27-000, 110506-36-000

KEY	PART NUMBER	U/M	DESCRIPTION	VENDOR NO.
	110506-40-700	EA	HDWE KIT	596950AAL

ENTRY

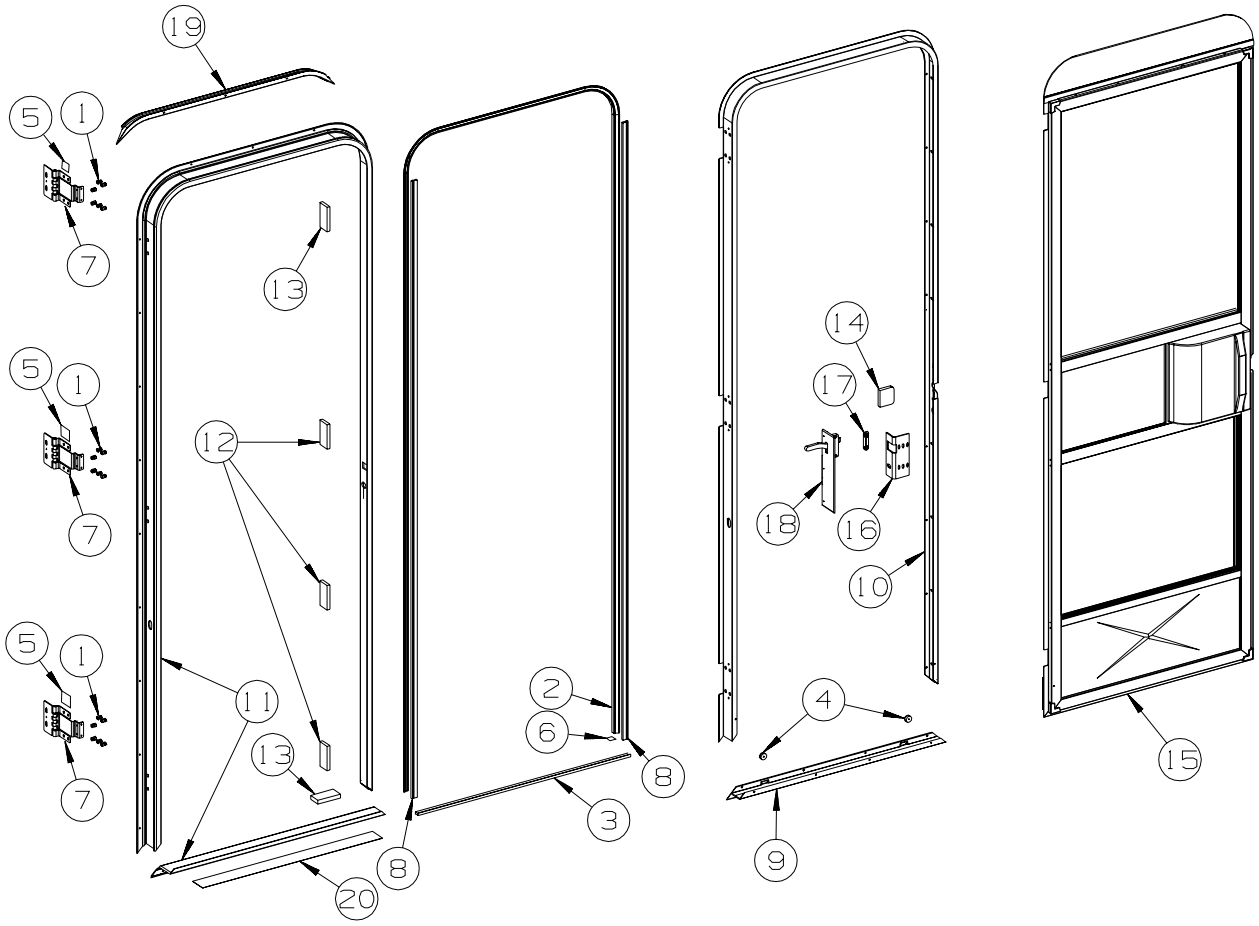

KEY	PART NUMBER	U/M	DESCRIPTION
1	039715-01-000	EA	NUT-SERT - 1/4" DIAMETER - 20 THREADS
2	075671-04-000	FT	SEAL - SPONGE - LAZY T - W/ADHESIVE STRIP - .5" WIDE
3	075673-05-000	FT	SEAL/PILE - .5" HIGH W/ADHESIVE BACK - BLACK
4	081914-02-000	EA	BUMPER - RUBBER - ROUND - 5/16" DIA. X 13/64" THICK
5	100128-02-000	FT	SEAL - FOAM/ADHESIVE BACK - .37" WIDE X .37" THICK X 60’
6	104692-01-000	FT	SEAL - ADHESIVE BACKED FOAM - 3/4" THICK X 3/4" WIDE X 25'
7	106719-01-05A	EA	HINGE - ENTRY DOOR - BRIGHT WHITE
8	118929-01-01A	FT	SEAL - PILE - PUSH ON
9	121893-01-01A	EA	FRAME - ENTRY DOOR/BOTTOM - BRIGHT WHITE
10	121894-30-01A	EA	FRAME - ENTRY DOOR - BRIGHT WHITE
11	121898-18-01A	EA	JAMB - DOOR/ENTRANCE - BRIGHT WHITE
12	125724-01-000	EA	SHIM - DOOR, ENTRANCE
13	125724-02-000	EA	SHIM - DOOR, ENTRANCE
14	130096-05-000	EA	FOAM - SCREEN DOOR, RETAINER
15	P32208-04-L07	EA	DOOR - SCREEN - W/O HARDWARE
16	137401-01-03B	EA	BRACKET - DOOR ANGLE - OFF WHITE
17	148364-01-12B	EA	STRIKE - SCREEN DOOR - BRIGHT WHITE
18	132915-01-01A	EA	LATCH - SCREEN DOOR - BLACK
19	139054-01-01A	EA	CAP - DRIP - JAMB MOUNTED - BRIGHT WHITE
20	038327-01-000	EA	TAPE - ANTI-SLIP - 2" X 60'

COPYRIGHT © 2006 WINNEBAGO INDUSTRIES INC.

EXTERIOR DOORS & COMPARTMENTS GROUP (CONTINUED)

ENTRY (CONTINUED)

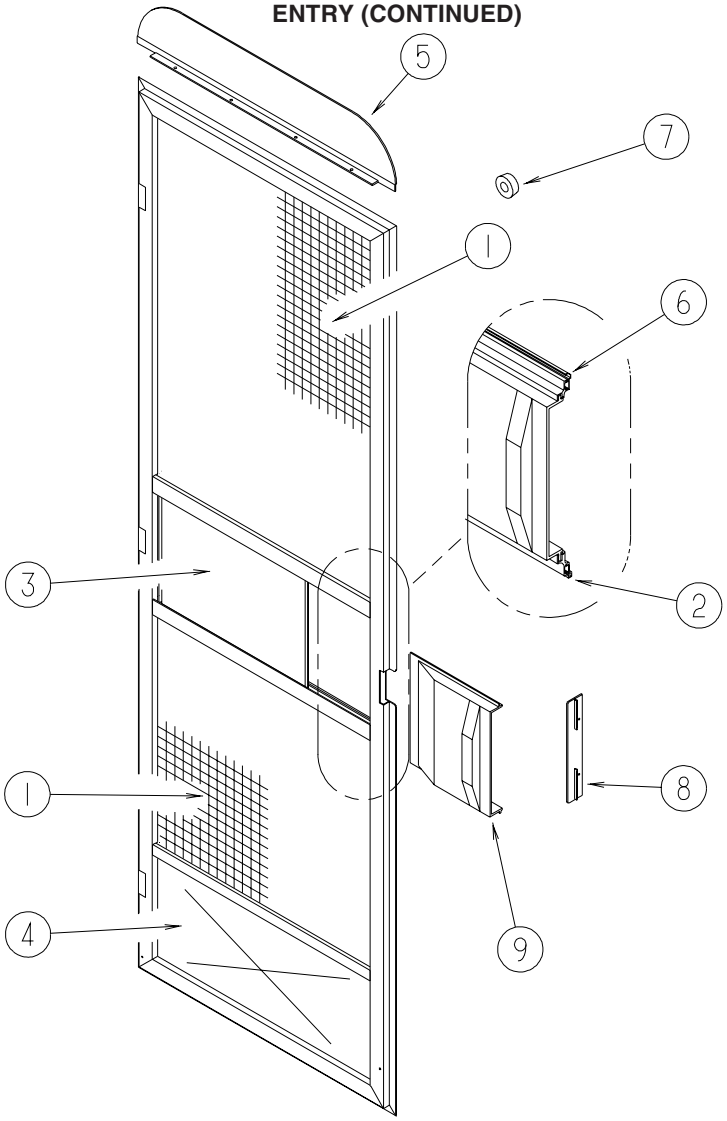

SCREEN

KEY	PART NUMBER	U/M	DESCRIPTION
1	002293-02-000	SF	SCREEN - 26" - CHARCOAL
2	002294-01-000	FT	SPLINE - SCREENING - .13" X .14"
3	016454-21-000	EA	INSERT/CENTER - SCREEN DOOR
4	078552-03-000	EA	KICK PANEL - SCREEN DOOR - LOWER INSERT - UNPAINTED
5	078595-01-000	EA	TOP PLATE - SCREEN DOOR - CURVED TOP - 4.7" X 25.35"
6	078777-08-000	FT	CHANNEL - SLIDER - 4 FOOT INCREMENTS
7	120863-06-000	EA	BUMPER - RUBBER/RADIUS TOP - 3/4" X 3/8" - LT GRAY FROM: 00-00-00 THRU: 06-26-05
7	120863-09-000	EA	BUMPER - RUBBER/RADIUS TOP - 3/4" X 3/8" - LT GRAY FROM: 06-27-05 THRU: 99-99-99
8	132081-01-01A	EA	STRIKE - SLIDER - SCREEN DOOR - BRIGHT WHITE
9	132082-01-01A	EA	SLIDER - SCREEN DOOR - BRIGHT WHITE

COPYRIGHT © 2006 WINNEBAGO INDUSTRIES INC.

EXTERIOR DOORS & COMPARTMENTS GROUP (CONTINUED)

ENTRY (CONTINUED)

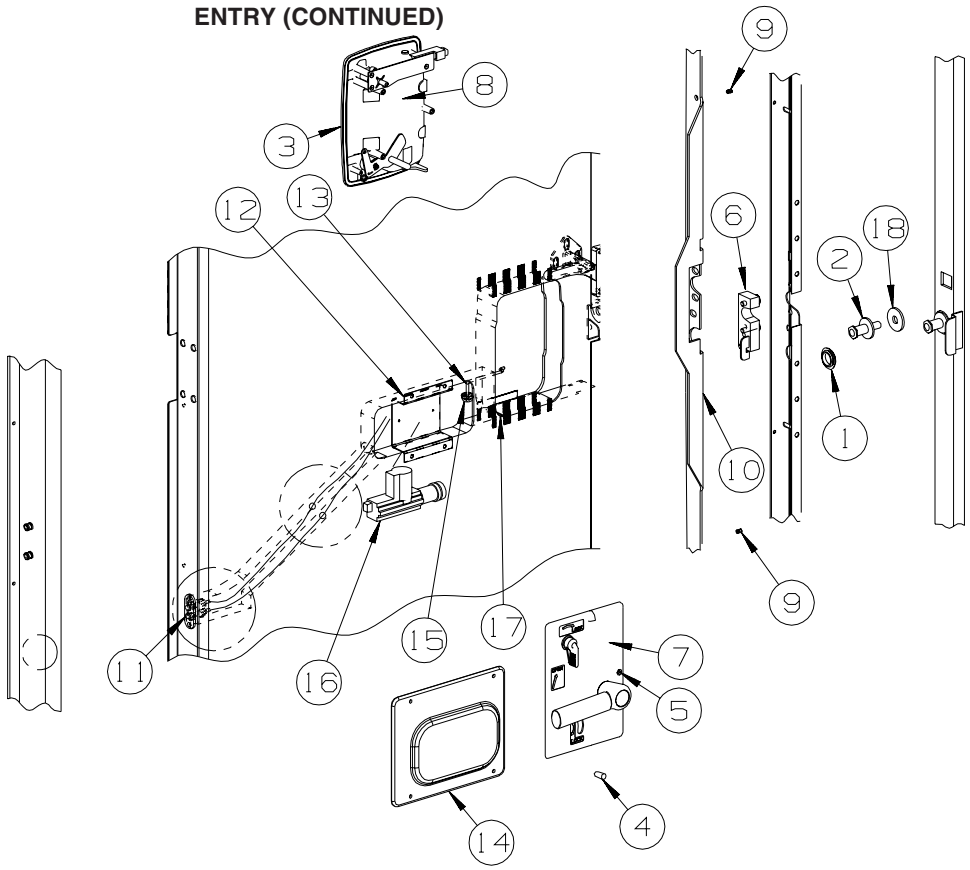

LATCH - ENTRY

KEY	PART NUMBER	U/M	DESCRIPTION
1	061420-14-000	EA	PLUG/PLASTIC - 7/8" DIAMETER - BLACK
2	092927-20-000	EA	STRIKER - BOLT
3	112782-04-01A	EA	GASKET
4	112782-05-01A	EA	CAP - VINYL - RED
5	112782-08-01A	EA	SCREW - MOUNTING/PLATE - ZINC
6	112782-22-01A	EA	LATCH - SINGLE ROTOR
7	112782-21-01A	EA	LATCH - INTERIOR PLATE FROM: 00-00-00 THRU: 04-30-06
7	112782-27-01A	EA	LATCH - INTERIOR PLATE - BRIGHT WHITE - NOT ILLUSTRATED FROM: 05-01-06 THRU: 99-99-99
8	112782-20-01A	EA	LATCH - EXTERIOR - W/O LOCK CYLINDER W/ICON-REVERSIBLE KEY
9	072893-04-000	EA	NUTSERT - 10-32
10	132207-01-02B	EA	STIFFENER/DOOR - FORMED - E-COATED - OUTLOOK, MINNIE WINNIE, SPIRIT, SUNDANCER
10	132207-03-02B	EA	STIFFENER/DOOR - FORMED - E-COATED - VIEW, ASPECT, NAVION, CAMBRIA
11	138897-01-000	EA	SWITCH - 2 PIN/SPRING LOADED CONTACTS (EA=1 SWITCH)
12	113650-02-02B	EA	BRACKET - ACTUATOR - ELECTRIC - E-COATED
13	113651-01-01A	EA	ROD - CONTROL - MOTOR/LOCK
14	113960-01-01A	EA	COVER - ACTUATOR - POWER LOCK
15	114209-01-01A	EA	PUSHNUT - CAP - 1/8” - WHITE
16	138898-01-000	EA	ACTUATOR/LOCK - ELECTRIC
17	137230-01-01A	EA	SPACER- NOTCHED, MILL
18	147900-01-01A	EA	SPACER-STRIKE BOLT,MILL

COPYRIGHT © 2006 WINNEBAGO INDUSTRIES INC.

EXTERIOR SLIDEOUT GROUP

FRONT

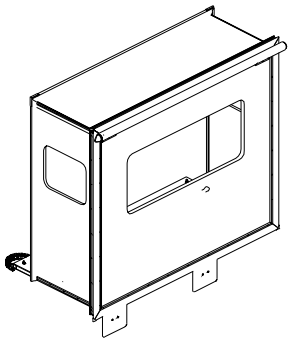

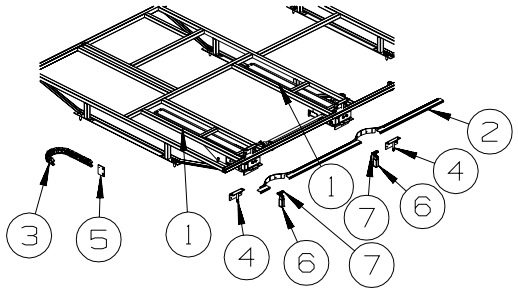

KEY	PART NUMBER	U/M	DESCRIPTION
1*	150661-01-000	EA	SLIDEOUT - ELECTRIC/SLIM
2	140282-03-S01	EA	TRIM - SIDEWALL - 89.9" - BRIGHT WHITE
3	143541-03-01A	EA	CARRIER/WIRING - F/SLIDEOUT ROOM - 13 LINKS
4	150569-01-02B	EA	BRACKET - MOUNTING - SLIDEOUT - W/HEX NUT/TUBE - E-COATED
5	151124-01-02B	EA	COVER - SLIDEOUT WIRES - E-COATED
6	126313-09-02B	EA	SUPPORT - ROLLER - SLIDE-OUT ROOM - E-COATED
7	134855-01-000	EA	BEARING PAD - NARROW

***COMPONENT PARTS LISTED LATER IN THIS GROUP**

COPYRIGHT © 2006 WINNEBAGO INDUSTRIES INC.

EXTERIOR SLIDEOUT GROUP (CONTINUED)

FRONT (CONTINUED)

NOTICE

BRIGHT WHITE TRIMS WERE USED FROM: 00-00-00 THRU: 06-12-05 ON ALL COLOR CODES
ALMOND TRIMS WERE USED FROM: 06-13-05 THRU: 99-99-99 ON ALL COLOR CODES

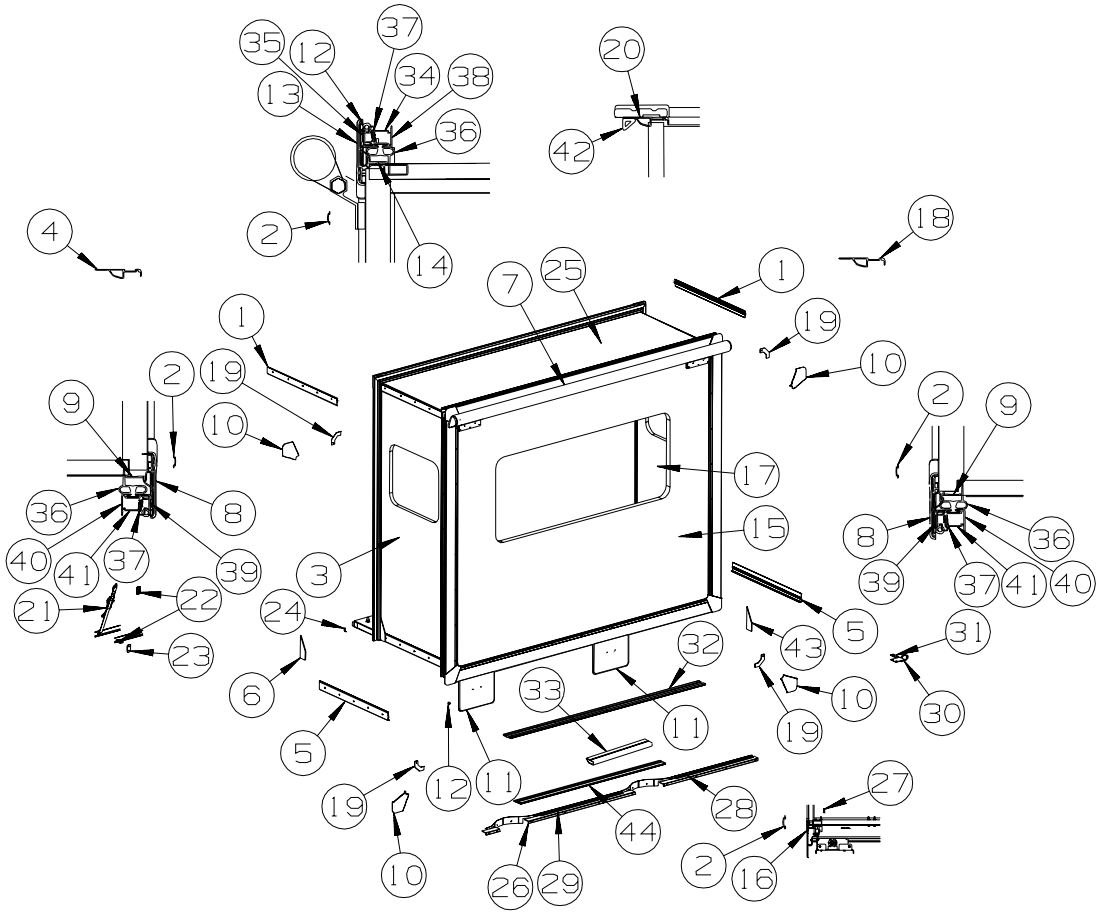

W/DINETTE

KEY	PART NUMBER	U/M	DESCRIPTION
1	138659-01-01A	EA	TRIM/FEATURE STRIP - 181.7" - BRIGHT WHITE - NOT ILLUSTRATED FROM: 00-00-00 THRU: 01-08-06
1	158375-01-01A	EA	TRIM - FEATURE STRIP - 29.6" - BRIGHT WHITE FROM: 01-09-06 THRU: 99-99-99
2	105312-01-07A	FT	INSERT - FEATURE STRIP - VINYL - BRIGHT WHITE
3	151432-01-S01	EA	PANEL END - F/SLIDEOUT (T11, TK0)
3	151432-01-T12	EA	PANEL END - F/SLIDEOUT (T12, TK1)
3	151432-01-S03	EA	PANEL END - F/SLIDEOUT (T13, TK2)
4	139624-25-01A	EA	TRIM/SEAL - INNER/RIGHT HAND W/NOTCH - 73.3" -BRIGHT WHITE - NOT ILLUSTRATED
4	139624-25-02A	EA	TRIM/SEAL - INNER/RIGHT HAND W/NOTCH - 73.3"- ALMOND
5	125051-03-01A	EA	TRIM - FEATURE STRIP/LOWER - 29.3" - BRIGHT WHITE - NOT ILLUSTRATED FROM: 00-00-00 THRU: 01-08-06
5	158030-02-01A	EA	TRIM - FEATURE STRIP/LOWER - 2.3" X 29.1" - BRIGHT WHITE FROM: 01-09-06 THRU: 99-99-99
6	157809-02-01A	EA	SEAL - FOAM BLOCK/LEFT SIDE - ADHESIVE BACK
7	122977-05-03A	EA	AWNING/SLIDEOUT W/COVER - 90" - WHITE - VINYL/VINYL WRAP
8	139625-05-01A	EA	TRIM/SEAL - W/MITERED ENDS - 76.9" - BRIGHT WHITE - NOT ILLUSTRATED FROM: 00-00-00 THRU: 01-08-06
8	156417-03-01A	EA	TRIM/SEAL - W/MITERED ENDS - 73.5" - BRIGHT WHITE FROM: 01-09-06 THRU: 99-99-99
9	133954-48-01A	EA	TRIM/SEAL - 71.7" - BRIGHT WHITE
10	135275-01-01A	EA	PROTECTOR - CORNER - SLIDEOUT - WHITE FROM: 00-00-00 THRU: 01-08-06
10	156151-01-02A	EA	PROTECTOR - CORNER - SLIDEOUT - BRIGHT WHITE FROM: 01-09-06 THRU: 99-99-99
11	138077-07-01A	EA	COVER/RAM - 11" X 8.8" - W/O TUBE - BRIGHT WHITE

COPYRIGHT © 2006 WINNEBAGO INDUSTRIES INC.

EXTERIOR SLIDEOUT GROUP (CONTINUED)

FRONT (CONTINUED)

KEY	PART NUMBER	U/M	DESCRIPTION
12	099418-01-000	FT	SEAL - D-SECTION/ADHESIVE BACK - .44" X .44" - BLK RUBBER
			FROM: 00-00-00 THRU: 02-12-06
12	158297-01-000	FT	SEAL - D-SECTION/BULB/TEE - ADHESIVE BACK - BLACK
			FROM: 02-13-06 THRU: 99-99-99
13	139625-46-01A	EA	TRIM/SEAL - W/MITERED ENDS - 91.2" - BRIGHT WHITE - NOT ILLUSTRATED
			FROM: 00-00-00 THRU: 01-08-06
13	156417-40-02A	EA	TRIM/SEAL - W/MITERED ENDS - 87.8" - BLACK
			FROM: 01-09-06 THRU: 99-99-99
14	133954-51-01A	EA	TRIM/SEAL - 86" - BRIGHT WHITE
15	154897-11-T11	EA	SLUG - F/SLIDEOUT (T11, TK0)
15	154897-11-T12	EA	SLUG - F/SLIDEOUT (T12, TK1)
15	154897-11-T13	EA	SLUG - F/SLIDEOUT (T13, TK2)
16	142233-15-01A	EA	TRIM/SEAL - W/MITERED ENDS - 91.2 - BRIGHT WHITE
			FROM: 00-00-00 THRU: 01-08-06
16	142233-27-02A	EA	TRIM/SEAL - W/MITERED ENDS - 87.8" - BLACK
			FROM: 01-09-06 THRU: 99-99-99
17	151431-01-S01	EA	PANEL END - F/SLIDEOUT (T11, TK0)
17	151431-01-T12	EA	PANEL END - F/SLIDEOUT (T12 , TK1)
17	151431-01-S03	EA	PANEL END - F/SLIDEOUT (T13, TK2)
18	139624-26-01A	EA	TRIM/SEAL - INNER/LEFT HAND W/NOTCH - 73.3" - BRIGHT WHITE - NOT ILLUSTRATED
18	139624-26-02A	EA	TRIM/SEAL - INNER/LEFT HAND W/NOTCH - 73.3" - ALMOND
19	116444-04-12B	EA	TRIM/KEY CORNER - SLIDEOUT - 3.1" X 3.1" - BRIGHT WHITE
			FROM: 00-00-00 THRU: 01-08-06
19	156416-01-12B	EA	BRACKET - CORNER TRIM/SLIDEOUT - 3.1"X 3.1" - BRIGHT WHITE
			FROM: 01-09-06 THRU: 99-99-99
20	139624-32-01A	EA	TRIM/SEAL - INNER/TOP - 89.5" - BRIGHT WHITE
20	139624-32-02A	EA	TRIM/SEAL - INNER/TOP - 89.5" - ALMOND
21	135619-01-01A	EA	STRAP - TIEDOWN - SLIDEOUT ROOM
22	135619-02-01A	EA	PLATE - TIEDOWN - SLIDEOUT ROOM
23	135622-01-02B	EA	PLATE - TIEDOWN - SLIDEOUT ROOM
24	151282-11-01A	EA	TRIM - CARPET EDGE/F-ANGLE - 83.7" - BLACK
25	149731-01-S34	EA	ROOF - F/SLIDEOUT
26	140282-03-S01	EA	TRIM - SIDEWALL - 89.9" - BRIGHT WHITE
27	123012-03-000	FT	SEAL - SLIDEOUT - .09"/.13" THICK X 1.8" - W/ADHESIVE
28	149821-16-01A	EA	TRIM/ANGLE - SIDEWALL - BLACK - 1/2" X 1/2" X 27"
29	149821-17-01A	EA	TRIM/ANGLE - SIDEWALL - BLACK - 1/2" X 1/2" X 28.9"
30	150697-03-02B	EA	BRACKET - RESTRAINT/CHILD - E-COATED
31	150700-01-02B	EA	PLATE/MOUNTING - RESTRAINT/CHILD - 1" X 2.3" - E-COATED
32	115325-03-02A	EA	RAIL - FLOOR/SLIDEOUT ROOM - 64.5" LONG - BLACK
	115661-01-000	EA	SHOE/GLIDE - SLIDEOUT ROOM - 1/16" X 3" - POLYETHYLENE
33	134756-03-M30	EA	RAMP - FABRIC COVERED - SLIDEOUT - 18.3" - VINYL FLOOR - THRU OUT
34	142718-33-01A	EA	RETAINER - SIDEWALL/SLIDEOUT - 89.4"
35	136824-16-02A	EA	TRIM - SIDEWALL/SLIDEOUT - 72.7" - BLACK
			FROM: 00-00-00 THRU: 01-08-06
35	136824-46-01A	EA	TRIM - SIDEWALL/SLIDEOUT - 90.7" - BRIGHT WHITE
			FROM: 01-09-06 THRU: 99-99-99
36	136978-01-01A	FT	SEAL - SLIDEOUT - SINGLE WIPE LIP - BLACK
37	142549-01-000	EA	CLIP - “S” TYPE
38	142719-25-01A	EA	TRIM/SIDEWALL - TOP/SLIDEOUT - 90.7" - BRIGHT WHITE - NOT ILLUSTRATED
38	142719-25-02A	EA	TRIM/SIDEWALL - TOP/SLIDEOUT - 90.7" - ALMOND - NOT ILLUSTRATED
			FROM: 06-13-05 THRU: 01-08-06
38	151761-19-02A	EA	TRIM - SIDEWALL/SLIDEOUT/TOP - 90.7" - ALMOND
			FROM: 01-09-06 THRU: 99-99-99
39	136824-31-01A	EA	TRIM - SIDEWALL/SLIDEOUT - 73.6" - BRIGHT WHITE
40	142720-09-01A	EA	TRIM - SIDEWALL/SLIDEOUT - 73.6" - BRIGHT WHITE - NOT ILLUSTRATED
40	142720-09-02A	EA	TRIM - SIDEWALL/SLIDEOUT - 73.6" - ALMOND - NOT ILLUSTRATED
			FROM: 06-13-05 THRU: 01-08-06
40	151760-16-02A	EA	TRIM - SIDEWALL/SLIDEOUT - 73.6" - ALMOND
			FROM: 01-09-06 THRU: 99-99-99
41	142718-01-01A	EA	RETAINER - SIDEWALL/SLIDEOUT - 72.8"
42	146056-01-000	FT	SEAL - TRIANGLE - W/PSA
43	157809-01-01A	EA	SEAL - FOAM BLOCK/RIGHT SIDE - ADHESIVE BACK
44	134837-01-01A	EA	RAMP - SLIDEOUT - BLACK PVC

COPYRIGHT © 2006 WINNEBAGO INDUSTRIES INC.

EXTERIOR SLIDEOUT GROUP (CONTINUED)

FRONT (CONTINUED)

NOTICE

BRIGHT WHITE TRIMS WERE USED FROM: 00-00-00 THRU: 06-12-05 ON ALL COLOR CODES
ALMOND TRIMS WERE USED FROM: 06-13-05 THRU: 99-99-99 ON ALL COLOR CODES

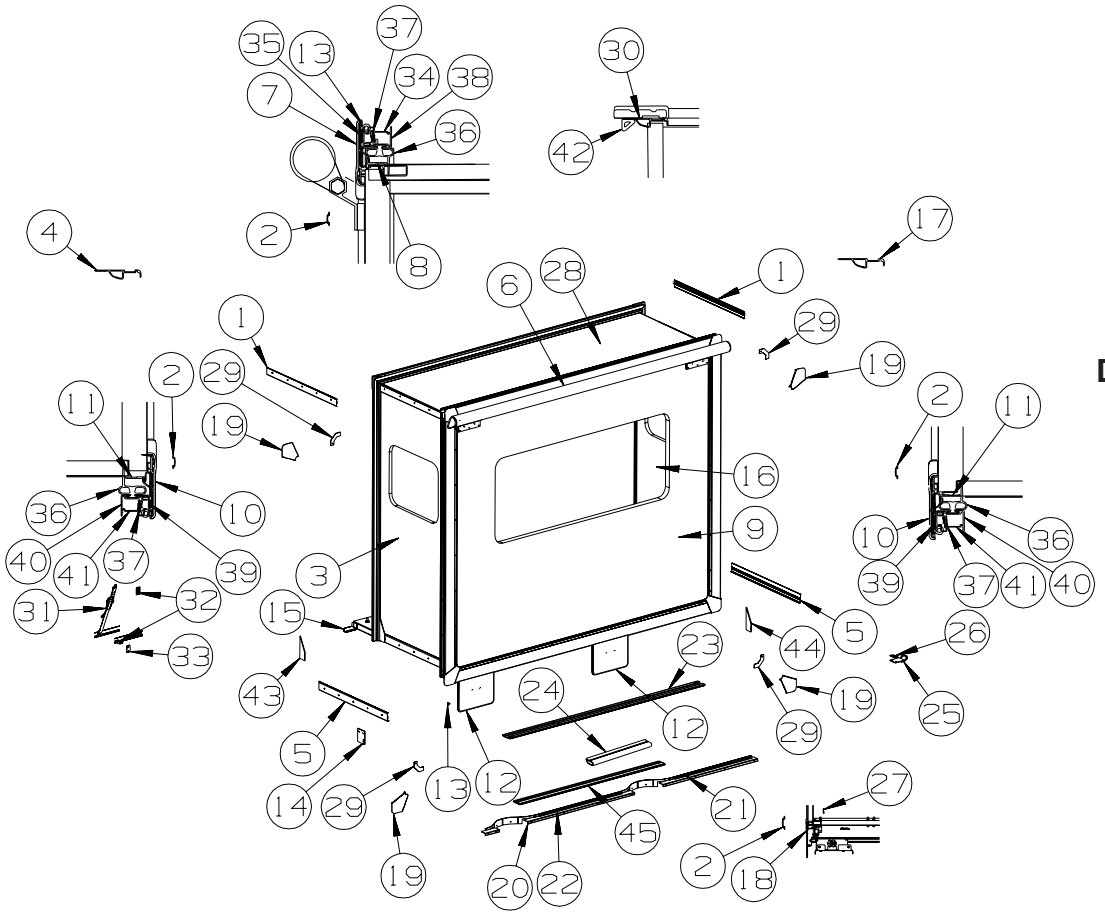

DINETTE - U-SHAPED

KEY	PART NUMBER	U/M	DESCRIPTION
1	138659-01-01A	EA	TRIM/FEATURE STRIP - 181.7" - BRIGHT WHITE - NOT ILLUSTRATED FROM: 00-00-00 THRU: 01-08-06
1	158375-04-01A	EA	TRIM - FEATURE STRIP - 24.6" - BRIGHT WHITE FROM: 01-09-06 THRU: 99-99-99
2	105312-01-07A	FT	INSERT - FEATURE STRIP - VINYL - BRIGHT WHITE
3	151432-02-S01	EA	PANEL END - F/SLIDEOUT (T11, TK0)
3	151432-02-T12	EA	PANEL END - F/SLIDEOUT (T12, TK1)
3	151432-02-S03	EA	PANEL END - F/SLIDEOUT (T13, TK2)
4	139624-25-01A	EA	TRIM/SEAL - INNER/RIGHT HAND W/NOTCH - 73.3" -BRIGHT WHITE
4	139624-25-02A	EA	TRIM/SEAL - INNER/RIGHT HAND W/NOTCH - 73.3"- ALMOND
5	125051-03-01A	EA	TRIM - FEATURE STRIP/LOWER - 29.3" - BRIGHT WHITE - NOT ILLUSTRATED FROM: 00-00-00 THRU: 01-08-06
5	158030-02-01A	EA	TRIM - FEATURE STRIP/LOWER - 2.3" X 29.1" - BRIGHT WHITE FROM: 01-09-06 THRU: 99-99-99
6	122977-05-03A	EA	AWNING/SLIDEOUT W/COVER - 90" - WHITE - VINYL/VINYL WRAP
7	139625-46-01A	EA	TRIM/SEAL - W/MITERED ENDS - 91.2" - BRIGHT WHITE - NOT ILLUSTRATED FROM: 00-00-00 THRU: 01-08-06
7	156417-40-01A	EA	TRIM/SEAL - W/MITERED ENDS - 87.8" - BRIGHT WHITE FROM: 01-09-06 THRU: 99-99-99
8	133954-51-01A	EA	TRIM/SEAL - 86" - BRIGHT WHITE
9	150878-13-S01	EA	SLUG - F/SLIDEOUT (T11, TK0)
9	150878-13-T12	EA	SLUG - F/SLIDEOUT (T12, TK1)
9	150878-13-S03	EA	SLUG - F/SLIDEOUT (T13, TK2)
10	139625-05-01A	EA	TRIM/SEAL - W/MITERED ENDS - 76.9" - BRIGHT WHITE - NOT ILLUSTRATED FROM: 00-00-00 THRU: 01-08-06
10	156417-03-02A	EA	TRIM/SEAL - W/MITERED ENDS - 73.5" - BLACK FROM: 01-09-06 THRU: 99-99-99

COPYRIGHT © 2006 WINNEBAGO INDUSTRIES INC.

EXTERIOR SLIDEOUT GROUP (CONTINUED)

FRONT (CONTINUED)

KEY	PART NUMBER	U/M	DESCRIPTION
11	133954-48-01A	EA	TRIM/SEAL - 71.7" - BRIGHT WHITE
12	138077-07-01A	EA	COVER/RAM - 11" X 8.8" - W/O TUBE - BRIGHT WHITE
13	099418-01-000	FT	SEAL - D-SECTION/ADHESIVE BACK - .44" X .44" - BLK RUBBER
			FROM: 00-00-00 THRU: 02-12-06
13	158297-01-000	FT	SEAL - D-SECTION/BULB/TEE - ADHESIVE BACK - BLACK
			FROM: 02-13-06 THRU: 99-99-99
14	151124-01-02B	EA	COVER - SLIDEOUT WIRES - E-COATED
15	151282-11-01A	EA	TRIM - CARPET EDGE/F-ANGLE - 83.7" - BLACK
16	151431-02-S01	EA	PANEL END - F/SLIDEOUT (T11, TK0)
16	151431-02-T12	EA	PANEL END - F/SLIDEOUT (T12, TK1)
16	151431-02-S03	EA	PANEL END - F/SLIDEOUT (T13, TK2)
17	139624-26-01A	EA	TRIM/SEAL - INNER/LEFT HAND W/NOTCH - 73.3" - BRIGHT WHITE
17	139624-26-02A	EA	TRIM/SEAL - INNER/LEFT HAND W/NOTCH - 73.3" - ALMOND
18	142233-15-01A	EA	TRIM/SEAL - W/MITERED ENDS - 91.2 - BRIGHT WHITE
			FROM: 00-00-00 THRU: 01-08-06
18	142233-27-01A	EA	TRIM/SEAL - W/MITERED ENDS - 87.8" - BRIGHT WHITE
			FROM: 01-09-06 THRU: 99-99-99
19	135275-01-01A	EA	PROTECTOR - CORNER - SLIDEOUT - WHITE
			FROM: 00-00-00 THRU: 01-08-06
19	156151-01-02A	EA	PROTECTOR - CORNER - SLIDEOUT - BRIGHT WHITE
			FROM: 01-09-06 THRU: 99-99-99
20	140282-03-S01	EA	TRIM - SIDEWALL - 89.9" - BRIGHT WHITE
21	149821-16-01A	EA	TRIM/ANGLE - SIDEWALL - BLACK - 1/2" X 1/2" X 27"
22	149821-17-01A	EA	TRIM/ANGLE - SIDEWALL - BLACK - 1/2" X 1/2" X 28.9"
23	115325-03-02A	EA	RAIL - FLOOR/SLIDEOUT ROOM - 64.5" LONG - BLACK
	115661-01-000	EA	SHOE/GLIDE - SLIDEOUT ROOM - 1/16" X 3" - POLYETHYLENE
24	134756-03-M30	EA	RAMP - FABRIC COVERED - SLIDEOUT - 18.3" - VINYL FLOOR - THRU OUT
25	150697-03-02B	EA	BRACKET - RESTRAINT/CHILD - E-COATED - DINETTE - U-SHAPED
26	150700-01-02B	EA	PLATE/MOUNTING - RESTRAINT/CHILD - 1" X 2.3" - E-COATED - DINETTE - U-SHAPED
27	123012-03-000	FT	SEAL - SLIDEOUT - .09"/.13" THICK X 2" - W/ADHESIVE
28	149731-01-S34	EA	ROOF - F/SLIDEOUT
29	116444-04-12B	EA	TRIM/KEY CORNER - SLIDEOUT - 3.1" X 3.1" - BRIGHT WHITE
			FROM: 00-00-00 THRU: 01-08-06
29	156416-01-12B	EA	BRACKET - CORNER TRIM/SLIDEOUT - 3.1"X 3.1" - BRIGHT WHITE
			FROM: 01-09-06 THRU: 99-99-99
30	139624-32-01A	EA	TRIM/SEAL - INNER/TOP - 89.5" - BRIGHT WHITE
30	139624-32-02A	EA	TRIM/SEAL - INNER/TOP - 89.5" - ALMOND
31	135619-01-01A	EA	STRAP - TIEDOWN - SLIDEOUT ROOM
32	135619-02-01A	EA	PLATE - TIEDOWN - SLIDEOUT ROOM
33	135622-01-02B	EA	PLATE - TIEDOWN - SLIDEOUT ROOM
34	142718-33-01A	EA	RETAINER - SIDEWALL/SLIDEOUT - 89.4"
35	136824-46-01A	EA	TRIM - SIDEWALL/SLIDEOUT - 90.7" - BRIGHT WHITE
36	136978-01-01A	FT	SEAL - SLIDEOUT - SINGLE WIPE LIP - BLACK
37	142549-01-000	EA	CLIP - “S” TYPE
38	142719-25-01A	EA	TRIM/SIDEWALL - TOP/SLIDEOUT - 90.7" - BRIGHT WHITE - NOT ILLUSTRATED
38	142719-25-02A	EA	TRIM/SIDEWALL - TOP/SLIDEOUT - 90.7" - ALMOND - NOT ILLUSTRATED
			FROM: 06-13-05 THRU: 01-08-06
38	151761-19-02A	EA	TRIM - SIDEWALL/SLIDEOUT/TOP - 90.7" - ALMOND
			FROM: 01-09-06 THRU: 99-99-99
39	136824-31-01A	EA	TRIM - SIDEWALL/SLIDEOUT - 73.6" - BRIGHT WHITE
40	142720-09-01A	EA	TRIM - SIDEWALL/SLIDEOUT - 73.6" - BRIGHT WHITE - NOT ILLUSTRATED
40	142720-09-02A	EA	TRIM - SIDEWALL/SLIDEOUT - 73.6" - ALMOND - NOT ILLUSTRATED
			FROM: 06-13-05 THRU: 01-08-06
40	151760-16-02A	EA	TRIM - SIDEWALL/SLIDEOUT - 73.6" - ALMOND
			FROM: 01-09-06 THRU: 99-99-99
41	142718-01-01A	EA	RETAINER - SIDEWALL/SLIDEOUT - 72.8"
42	146056-01-000	FT	SEAL - TRIANGLE - W/PSA
43	157809-02-01A	EA	SEAL - FOAM BLOCK/LEFT SIDE - ADHESIVE BACK
44	157809-01-01A	EA	SEAL - FOAM BLOCK/RIGHT SIDE - ADHESIVE BACK
45	134837-01-01A	EA	RAMP - SLIDEOUT - BLACK PVC

COPYRIGHT © 2006 WINNEBAGO INDUSTRIES INC.

EXTERIOR SLIDEOUT GROUP (CONTINUED)

FRONT (CONTINUED)

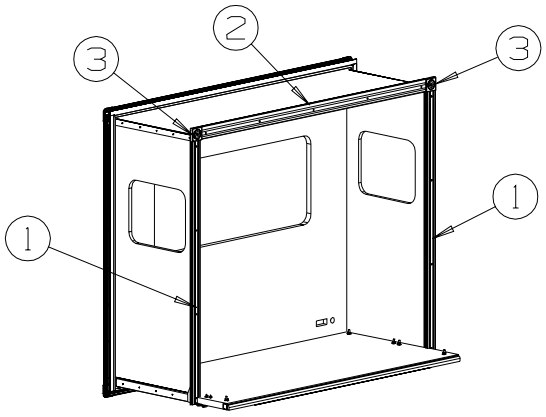

KEY	PART NUMBER	U/M	DESCRIPTION
1	132663-04-08A	EA	MOLDING - VINYL WRAP/PRE DRILLED - .6" X 3" X 70.2" - PORTSMOUTH OAK
1	132663-04-22A	EA	MOLDING - VINYL WRAP/PRE DRILLED - .6" X 3" X 70.2" - SIERRA MAPLE
2	132663-28-08A	EA	MOLDING - VINYL WRAP/PRE DRILLED - .6" X 3.4" X 82.6" - PORTSMOUTH OAK
2	132663-28-22A	EA	MOLDING - VINYL WRAP/PRE DRILLED - .6" X 3.4" X 82.6" - SIERRA MAPLE
3	132844-02-08A	EA	BLOCK - CORNER - 3.5" X 3.5" - PORTSMOUTH OAK
3	132844-02-22A	EA	BLOCK - CORNER - 3.5" X 3.5" - SIERRA MAPLE

COMPONENT PARTS FOR FRONT SLIDEOUT

150661-01-000

KEY	PART NUMBER	U/M	DESCRIPTION	VENDOR NO.
	150661-01-700	EA	SHAFT - SLAVE	29042
	150661-01-701	EA	SHAFT - ROUND DRIVE - 30"	29038
	150661-01-702	EA	POWER HEAD W/WORM DRIVE	29020
	150661-01-703	EA	CRANK TUBE	29022
	150661-01-704	EA	CAM FOLLOWER & NUT	28701
	150661-01-705	EA	FLANGE BEARING - .63" X .5"L	645-0028
	150661-01-706	EA	SPROCKET	28706
	150661-01-707	EA	SET SCREW - 1/4"-20	608-6005
	150661-01-708	EA	CLEVIS PIN	643-0030
	150661-01-709	EA	COTTOR PIN	625-0017
	150661-01-710	EA	CLEVIS PIN	643-0003
	150661-01-711	EA	COTTER PIN	625-0016
	150661-01-712	EA	SHAFT - ROUND DRIVE - 7.4"	29040
	150661-01-713	EA	ADAPTER - ADJUSTABLE SHAFT	28395
	150661-01-714	EA	RETAINING RING	634-0007
	150661-01-715	EA	DRIVE ASM. (MOTOR W/GEAR BOX)	29449
	150661-01-716	EA	MOTOR ONLY	16263

COPYRIGHT © 2006 WINNEBAGO INDUSTRIES INC.

EXTERIOR SLIDEOUT GROUP (CONTINUED)

REAR

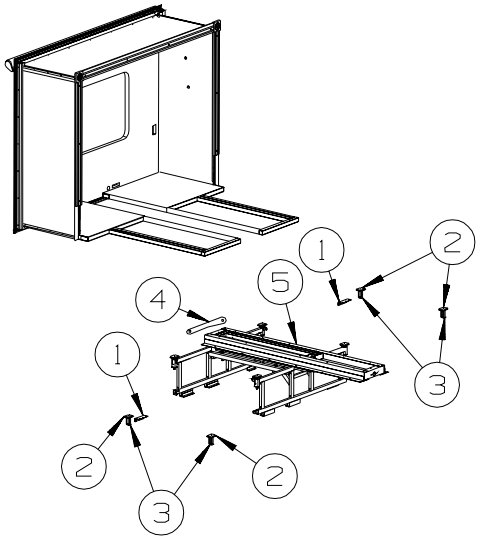

KEY	PART NUMBER	U/M	DESCRIPTION
1	113904-16-02B	EA	ANGLE - ATTACHMENT/WHEEL LIP - 5.1" - E-COAT FROM: 00-00-00 THRU: 05-01-05
1	113904-23-02B	EA	ANGLE - ATTACHMENT/WHEEL LIP - E-COATED FROM: 05-02-05 THRU: 99-99-99
2	128599-03-000	EA	PAD - F/SLIDEOUT - 2" X 2.6"
3	126313-02-02B	EA	SUPPORT - SLIDE - F/SLIDE-OUT ROOM - E-COATED
4	140464-03-000	EA	WRENCH - SLIDE ROOM RETRACT - RATCHET W/2 EXTENSIONS
5*	140464-01-000	EA	SLIDEOUT CYLINDER ASM - REAR/SINGLE - ELECTRIC - KWIKEE

***COMPONENT PARTS LISTED LATER IN THIS GROUP**

COPYRIGHT © 2006 WINNEBAGO INDUSTRIES INC.

EXTERIOR SLIDEOUT GROUP (CONTINUED)

REAR (CONTINUED)

NOTICE

BRIGHT WHITE TRIMS WERE USED FROM: 00-00-00 THRU: 06-12-05 ON ALL COLOR CODES
ALMOND TRIMS WERE USED FROM: 06-13-05 THRU: 99-99-99 ON ALL COLOR CODES

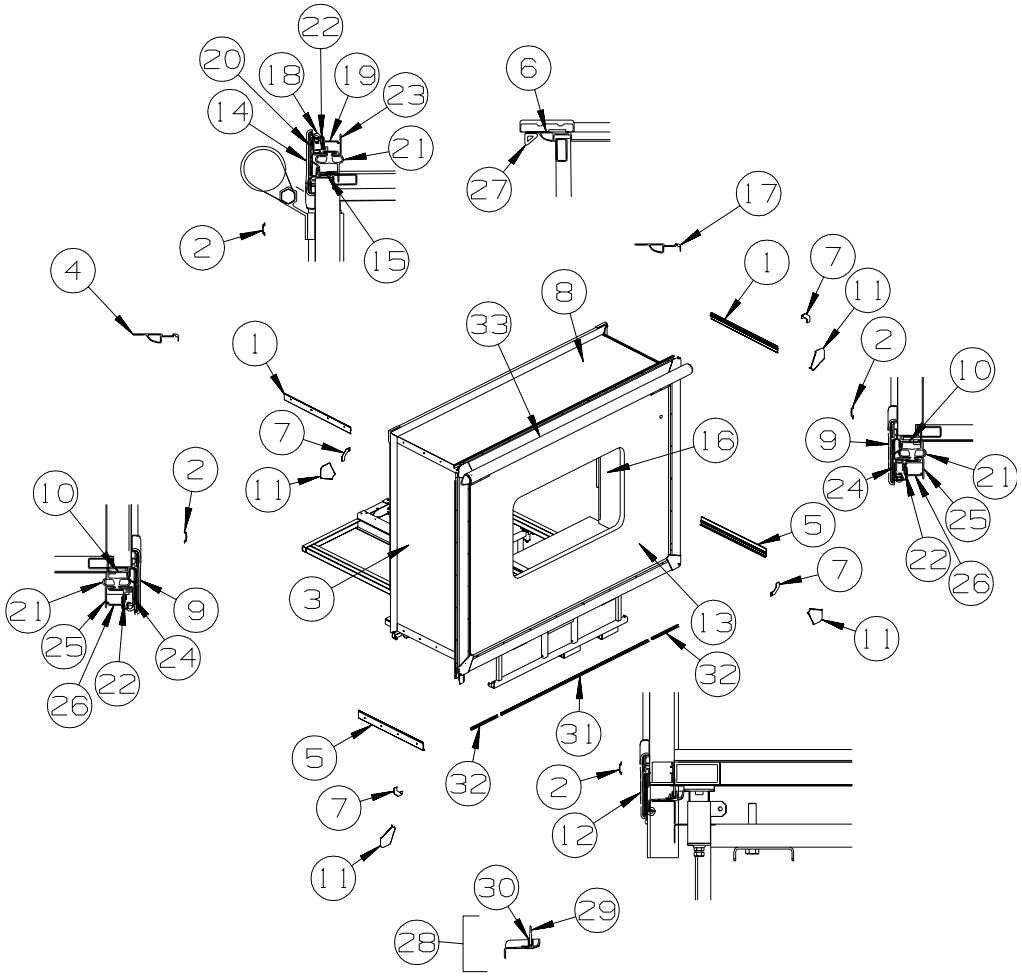

KEY	PART NUMBER	U/M	DESCRIPTION
1	138659-01-01A	EA	TRIM/FEATURE STRIP - 181.7" - BRIGHT WHITE - NOT ILLUSTRATED FROM: 00-00-00 THRU: 01-08-06
1	158375-04-01A	EA	TRIM - FEATURE STRIP - 24.6" - BRIGHT WHITE FROM: 01-09-06 THRU: 99-99-99
2	105312-01-01A	FT	INSERT - FEATURE STRIP - VINYL - OFF WHITE
3	151280-01-S01	EA	PANEL END - F/SLIDEOUT (T11, TK0)
3	151280-01-T12	EA	PANEL END - F/SLIDEOUT (T12, TK1)
3	151280-01-S03	EA	PANEL END - F/SLIDEOUT (T13, TK2)
4	139624-20-01A	EA	TRIM/SEAL - INNER/RIGHT HAND W/NOTCH - 60.6" - BRIGHT WHITE - NOT ILLUSTRATED
4	139624-20-02A	EA	TRIM/SEAL - INNER/RIGHT HAND W/NOTCH - 60.6" - ALMOND
5	125051-02-01A	EA	TRIM - FEATURE STRIP/LOWER - 24.3" - BRIGHT WHITE - NOT ILLUSTRATED FROM: 00-00-00 THRU: 01-08-06
5	158030-05-01A	EA	TRIM - FEATURE STRIP/LOWER - 2.3" X 24" - BRIGHT WHITE FROM: 01-09-06 THRU: 99-99-99
6	139624-04-01A	EA	TRIM/SEAL - INNER/TOP - 80.2" - BRIGHT WHITE
6	139624-04-02A	EA	TRIM/SEAL - INNER/TOP - 80.2" - ALMOND
7	116444-04-12B	EA	TRIM/KEY CORNER - SLIDEOUT - 3.1" X 3.1" - BRIGHT WHITE - NOT ILLUSTRATED FROM: 00-00-00 THRU: 01-08-06
7	156416-01-12B	EA	BRACKET - CORNER TRIM/SLIDEOUT - 3.1"X 3.1" - BRIGHT WHITE FROM: 01-09-06 THRU: 99-99-99
8	136557-01-S01	EA	ROOF - F/SLIDEOUT
9	139625-26-01A	EA	TRIM/SEAL - W/MITERED ENDS - 63.3" - BRIGHT WHITE - NOT ILLUSTRATED FROM: 00-00-00 THRU: 01-08-06
9	156417-17-01A	EA	TRIM/SEAL - W/MITERED ENDS - 59.9" - BRIGHT WHITE FROM: 01-09-06 THRU: 99-99-99

COPYRIGHT © 2006 WINNEBAGO INDUSTRIES INC.

EXTERIOR SLIDEOUT GROUP (CONTINUED)

REAR (CONTINUED)

KEY	PART NUMBER	U/M	DESCRIPTION
10	133954-54-01A	EA	TRIM/SEAL - 56.7" - BRIGHT WHITE
11	135275-01-01A	EA	PROTECTOR - CORNER - SLIDEOUT - WHITE - NOT ILLUSTRATED
			FROM: 00-00-00 THRU: 01-08-06
11	156151-01-02A	EA	PROTECTOR - CORNER - SLIDEOUT - BRIGHT WHITE
			FROM: 01-09-06 THRU: 99-99-99
12	142233-04-01A	EA	TRIM/SEAL - W/MITERED ENDS - 82" - BRIGHT WHITE
			FROM: 00-00-00 THRU: 01-08-06
12	142233-20-01A	EA	TRIM/SEAL - W/MITERED ENDS - 78.4" - BRIGHT WHITE
			FROM: 01-09-06 THRU: 99-99-99
13	154897-12-T11	EA	SLUG - F/SLIDEOUT (T11, TK0)
13	154897-12-T12	EA	SLUG - F/SLIDEOUT (T12, TK1)
13	154897-12-T13	EA	SLUG - F/SLIDEOUT (T13, TK2)
14	139625-03-01A	EA	TRIM/SEAL - W/MITERED ENDS - 82" - BRIGHT WHITE
			FROM: 00-00-00 THRU: 01-08-06
14	139625-03-01A	EA	TRIM/SEAL - W/MITERED ENDS - 82" - BRIGHT WHITE
			FROM: 00-00-00 THRU: 01-08-06
14	156417-01-01A	EA	TRIM/SEAL - W/MITERED ENDS - 76.5" - BRIGHT WHITE
			FROM: 01-09-06 THRU: 99-99-99
15	133954-12-01A	EA	TRIM/SEAL - 75.7" - BRIGHT WHITE
16	151246-01-S01	EA	PANEL END - F/SLIDEOUT (T11, TK0)
16	151246-01-T12	EA	PANEL END - F/SLIDEOUT (T12, TK1)
16	151246-01-S03	EA	PANEL END - F/SLIDEOUT (T13, TK2)
17	139624-21-01A	EA	TRIM/SEAL - INNER/LEFT HAND W/NOTCH - 60.6" - BRIGHT WHITE
17	139624-21-02A	EA	TRIM/SEAL - INNER/LEFT HAND W/NOTCH - 60.6" - ALMOND
18	099418-01-000	FT	SEAL - D-SECTION/ADHESIVE BACK - .44" X .44" - BLK RUBBER - NOT ILLUSTRATED
			FROM: 00-00-00 THRU: 02-12-06
18	158297-01-000	FT	SEAL - D-SECTION/BULB/TEE - ADHESIVE BACK - BLACK
			FROM: 02-13-06 THRU: 99-99-99
19	142718-23-01A	EA	RETAINER - SIDEWALL/SLIDEOUT - 79.9"
20	136824-02-01A	EA	TRIM - SIDEWALL/SLIDEOUT - 81.2" - BRIGHT WHITE
21	136978-01-01A	FT	SEAL - SLIDEOUT - SINGLE WIPE LIP - BLACK
22	142549-01-000	EA	CLIP - “S” TYPE
23	142719-05-01A	EA	TRIM/SIDEWALL - TOP/SLIDEOUT - 81.3" - BRIGHT WHITE - NOT ILLUSTRATED
23	142719-05-02A	EA	TRIM/SIDEWALL - TOP/SLIDEOUT - 81.3" - ALMOND - NOT ILLUSTRATED
			FROM: 06-13-05 THRU: 10-16-05
23	151761-02-02A	EA	TRIM - SIDEWALL/SLIDEOUT/TOP - 81.2" - ALMOND
			FROM: 10-17-05 THRU: 99-99-99
24	136824-19-01A	EA	TRIM - SIDEWALL/SLIDEOUT - 60.6" - BRIGHT WHITE - NOT ILLUSTRATED
24	136824-19-02A	EA	TRIM - SIDEWALL/SLIDEOUT - 60.6" - ALMOND
25	142720-13-01A	EA	TRIM - SIDEWALL/SLIDEOUT - 60.5" - BRIGHT WHITE - NOT ILLUSTRATED
25	142720-13-02A	EA	TRIM - SIDEWALL/SLIDEOUT - ALMOND
26	142718-26-01A	EA	RETAINER - SIDEWALL/SLIDEOUT - 60.2"
27	146056-01-000	FT	SEAL - TRIANGLE - W/PSA
28	141174-01-02A	EA	TRIM/ZEE - SIDEWALL - 81.4" - BRIGHT WHITE
			FROM: 00-00-00 THRU: 10-16-05
28	157584-02-AA2	EA	TRIM/ZEE - W/SEAL/END CAPS - SLIDEOUT/LOWER-80.7"- BRT WHT
			FROM: 10-17-05 THRU: 99-99-99
29	123012-01-000	FT	SEAL - SLIDEOUT - .09"/.13" THICK X 1.3" - W/ADHESIVE
30	149821-01-01A	EA	TRIM/ANGLE - SIDEWALL - BLACK - 1/2" X 1/2" X 77.9" - NOT ILLUSTRATED
			FROM: 00-00-00 THRU: 01-08-06
30	153109-04-01A	EA	ANGLE/RETAINER - SEAL - .5" X .5" X 210.9" - MILL
			FROM: 01-09-06 THRU: 99-99-99
31	153109-11-02A	EA	ANGLE/RETAINER - SEAL - .5" X .5" X 53.1" - BLACK
32	153109-16-02A	EA	ANGLE/RETAINER - SEAL - .5" X .5" X 9.8" - BLACK
33	122977-12-03A	EA	AWNING/SLIDEOUT W/COVER - 81.8" - VINYL WRAP/WHITE

COPYRIGHT © 2006 WINNEBAGO INDUSTRIES INC.

EXTERIOR SLIDEOUT GROUP (CONTINUED)

REAR (CONTINUED)

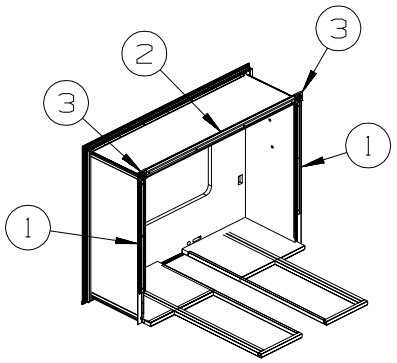

KEY	PART NUMBER	U/M	DESCRIPTION
1	132663-17-08A	EA	MOLDING - VINYL WRAP/PRE DRILLED - .6" X 3" X 45.5" - PORTSMOUTH OAK
1	132663-17-22A	EA	MOLDING - VINYL WRAP/PRE DRILLED - .6" X 3" X 45.5" - SIERRA MAPLE
2	132663-18-08A	EA	MOLDING - VINYL WRAP/PRE DRILLED - .6" X 3.4" X 73.2" - PORTSMOUTH OAK
2	132663-18-22A	EA	MOLDING - VINYL WRAP/PRE DRILLED - .6" X 3.4" X 73.1" - SIERRA MAPLE
3	132844-02-08A	EA	BLOCK - CORNER - 3.5" X 3.5" - PORTSMOUTH OAK
3	132844-02-22A	EA	BLOCK - CORNER - 3.5" X 3.5" - SIERRA MAPLE

COMPONENT PARTS FOR REAR SLIDEOUT

140464-01-000

KEY	PART NUMBER	U/M	DESCRIPTION	VENDOR NO.
	138173-01-700	EA	PIN/CLEVIS - PLATED/FRONT	1213810
	138173-01-706	EA	MOTOR - DRIVE W/WORM SHAFT	1820106
	138173-01-707	EA	WEAR PUCK - PLASTIC F/DRIVE	1612523

COPYRIGHT © 2006 WINNEBAGO INDUSTRIES INC.

GENERATOR GROUP

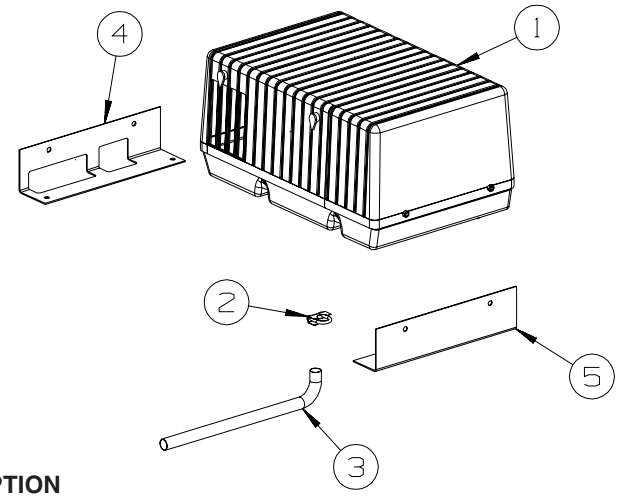

322E & 322R

KEY	PART NUMBER	U/M	DESCRIPTION
1	109982-03-000	EA	GENERATOR - 4.0 MICROLITE - ONAN
2	007125-04-000	EA	CLAMP - MUFFLER - 1.12"DIAMETER
3	105958-08-000	EA	PIPE - EXHAUST/GENERATOR - 1.5" OD X 3.1" X 19.7"
4	114070-02-02B	EA	SUPPORT - GENERATOR - LEFT
5	114071-02-02B	EA	SUPPORT - GENERATOR - RIGHT
	088258-02-000	EA	CLIP - RETAINING - FUEL LINE SINGLE
	128139-03-000	FT	HOSE - FUEL - LOW PERMEABILITY - 1/4" DIAMETER
	084884-01-000	EA	PLUG - BRASS - 3/8”

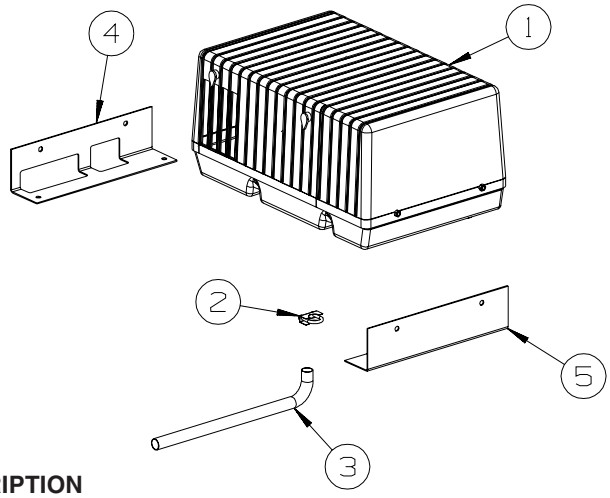

324V, 326A, &327L

KEY	PART NUMBER	U/M	DESCRIPTION
1	109982-03-000	EA	GENERATOR - 4.0 MICROLITE - ONAN
2	007125-04-000	EA	CLAMP - MUFFLER - 1.12"DIAMETER
3	105958-08-000	EA	PIPE - EXHAUST/GENERATOR - 1.5" OD X 3.1" X 19.7"
4	114070-02-02B	EA	SUPPORT - GENERATOR - LEFT
5	114071-02-02B	EA	SUPPORT - GENERATOR - RIGHT
	088258-02-000	EA	CLIP - RETAINING - FUEL LINE SINGLE - 324V & 327L
	128139-03-000	FT	HOSE - FUEL - LOW PERMEABILITY - 1/4" DIAMETER
	084884-01-000	EA	PLUG - BRASS - 3/8”

COPYRIGHT © 2006 WINNEBAGO INDUSTRIES INC.

GENERATOR GROUP (CONTINUED)

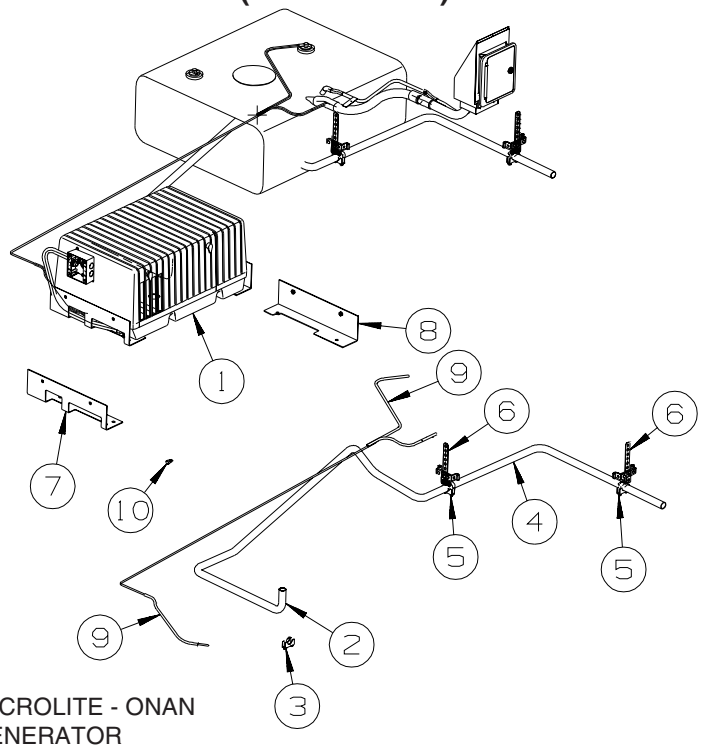

325F - FORD

KEY	PART NUMBER	U/M	DESCRIPTION
1	109982-03-000	EA	GENERATOR - 4.0 MICROLITE - ONAN
2	138232-02-000	EA	PIPE - EXHAUST - GENERATOR
3	007125-04-000	EA	CLAMP - MUFFLER - 1.12"DIAMETER
4	139763-02-000	EA	PIPE - EXHAUST - GENERATOR
5	007125-03-000	EA	CLAMP - MUFFLER - 1.5"DIAMETER
6	007131-01-000	EA	HANGER - TAILPIPE - 6 SLOTS
7	114070-02-02B	EA	SUPPORT - GENERATOR - LEFT
8	114071-02-02B	EA	SUPPORT - GENERATOR - RIGHT
9	128139-03-000	FT	HOSE - FUEL - LOW PERMEABILITY - 1/4” DIAMETER
10	084884-01-000	EA	PLUG - BRASS - 3/8”

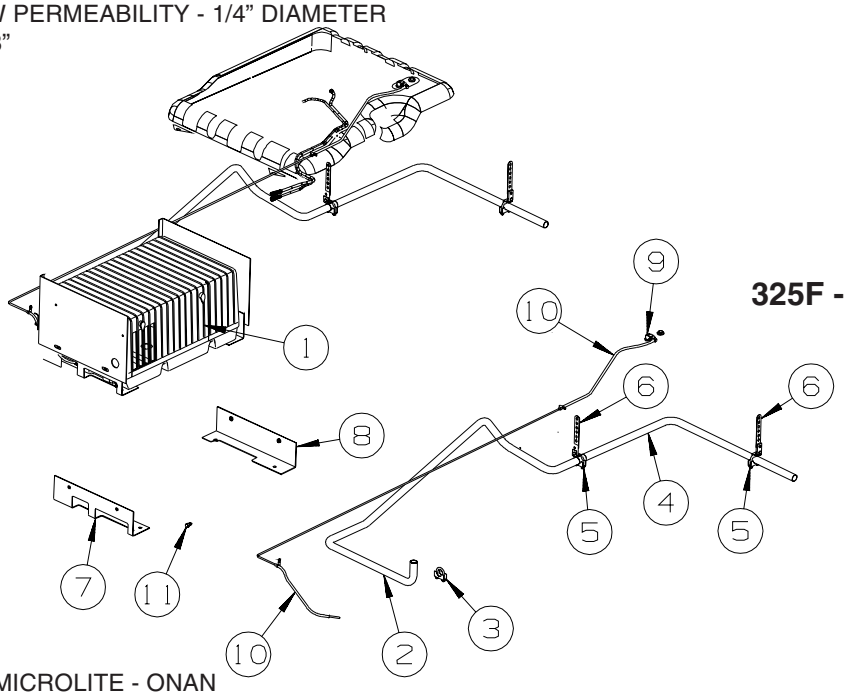

325F - CHEVY

KEY	PART NUMBER	U/M	DESCRIPTION
1	109982-03-000	EA	GENERATOR - 4.0 MICROLITE - ONAN
2	138232-02-000	EA	PIPE - EXHAUST - GENERATOR
3	007125-04-000	EA	CLAMP - MUFFLER - 1.12"DIAMETER
4	139763-02-000	EA	PIPE - EXHAUST - GENERATOR
5	007125-03-000	EA	CLAMP - MUFFLER - 1.5"DIAMETER
6	007131-01-000	EA	HANGER - TAILPIPE - 6 SLOTS
7	114070-02-02B	EA	SUPPORT - GENERATOR - LEFT
8	114071-02-02B	EA	SUPPORT - GENERATOR - RIGHT
9	128139-03-000	FT	HOSE - FUEL - LOW PERMEABILITY - 1/4” DIAMETER
10	084884-01-000	EA	PLUG - BRASS - 3/8”

COPYRIGHT © 2006 WINNEBAGO INDUSTRIES INC.

GENERATOR GROUP (CONTINUED)

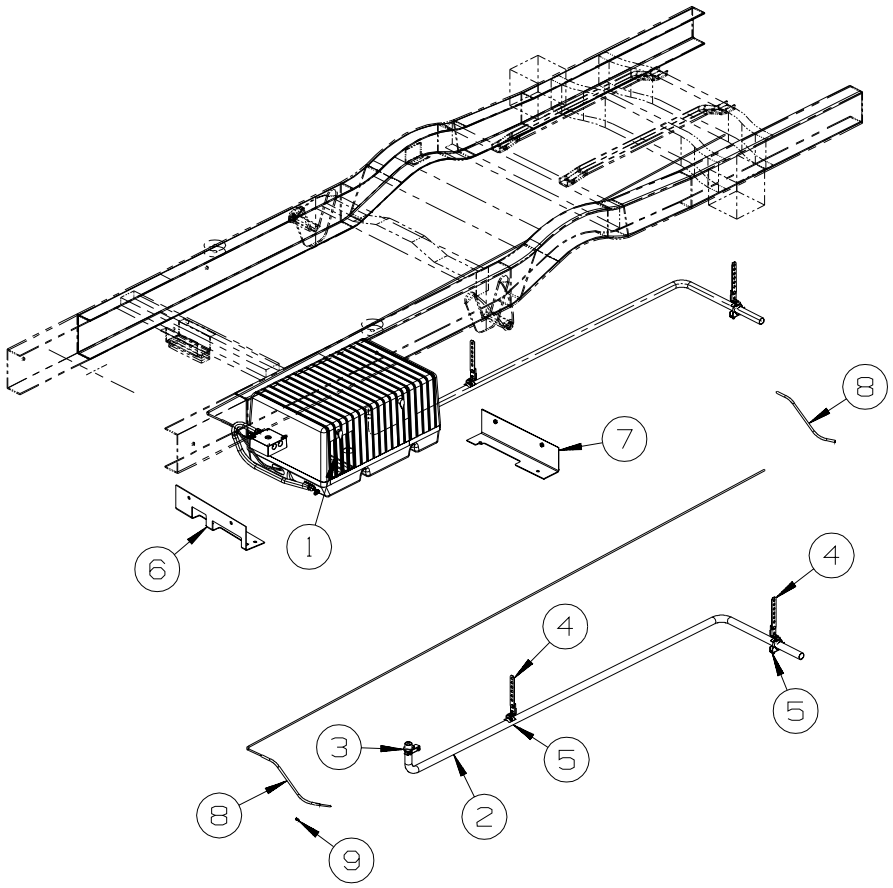

329B/SB, 329K - FORD

KEY	PART NUMBER	U/M	DESCRIPTION
1	109982-03-000	EA	GENERATOR - 4.0 MICROLITE - ONAN
2	141158-01-000	EA	PIPE/EXHAUST - GENERATOR
3	007125-04-000	EA	CLAMP - MUFFLER - 1.12"DIAMETER
4	007131-01-000	EA	HANGER - TAILPIPE - 6 SLOTS
5	007125-03-000	EA	CLAMP - MUFFLER - 1.5"DIAMETER
6	114070-02-02B	EA	SUPPORT - GENERATOR - LEFT
7	114071-02-02B	EA	SUPPORT - GENERATOR - RIGHT
8	128139-03-000	FT	HOSE - FUEL - LOW PERMEABILITY - 1/4" DIAMETER
9	084884-01-000	EA	PLUG - BRASS - 3/8”

COPYRIGHT © 2006 WINNEBAGO INDUSTRIES INC.

GENERATOR GROUP (CONTINUED)

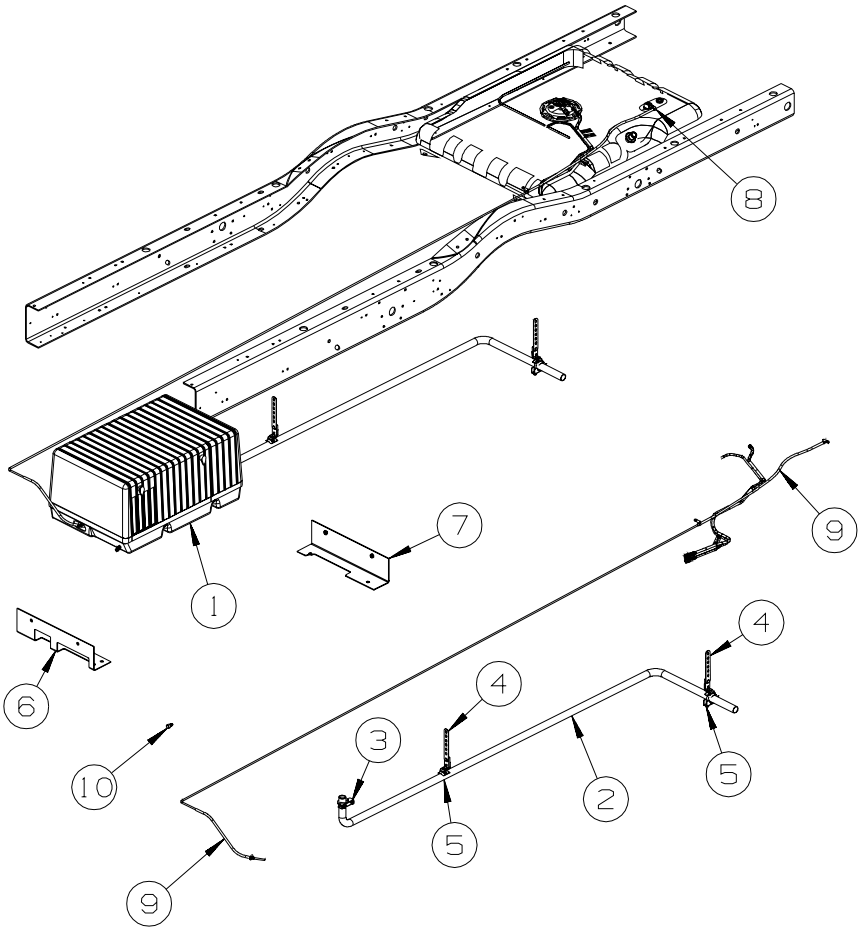

329B, 329K - CHEVY

KEY	PART NUMBER	U/M	DESCRIPTION
1	109982-03-000	EA	GENERATOR - 4.0 MICROLITE - ONAN
2	141158-01-000	EA	PIPE/EXHAUST - GENERATOR
3	007125-04-000	EA	CLAMP - MUFFLER - 1.12"DIAMETER
4	007131-01-000	EA	HANGER - TAILPIPE - 6 SLOTS
5	007125-03-000	EA	CLAMP - MUFFLER - 1.5"DIAMETER
6	114070-02-02B	EA	SUPPORT - GENERATOR - LEFT
7	114071-02-02B	EA	SUPPORT - GENERATOR - RIGHT
8	068382-06-000	EA	BUSHING - 3/8"MPT X 1/8"FPT - BRASS
8	114253-01-000	EA	ELBOW - 1/4 SINGLE BARB X 1/8 MPT
9	128139-03-000	FT	HOSE - FUEL - LOW PERMEABILITY - 1/4" DIAMETER
10	084884-01-000	EA	PLUG - BRASS - 3/8”

COPYRIGHT © 2006 WINNEBAGO INDUSTRIES INC.

GENERATOR GROUP (CONTINUED)

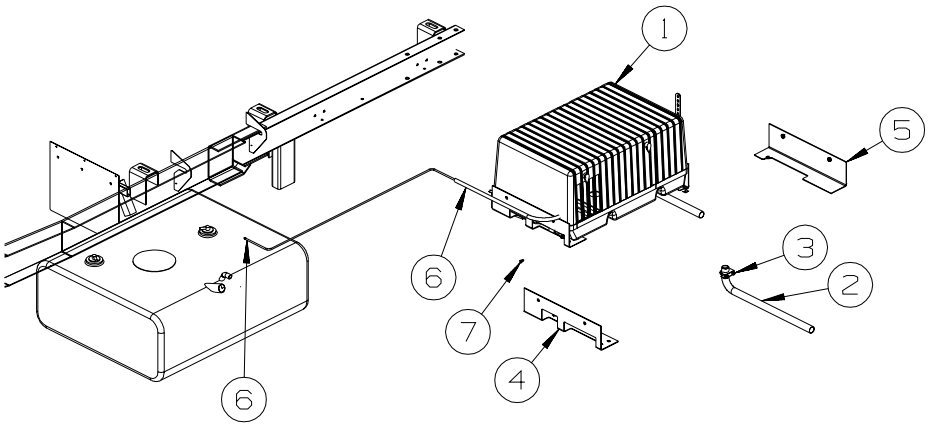

331C/SC
331K
FORD

KEY	PART NUMBER	U/M	DESCRIPTION
1	109982-03-000	EA	GENERATOR - 4.0 MICROLITE - ONAN
2	105958-08-000	EA	PIPE - EXHAUST/GENERATOR - 1.5" OD X 3.1" X 19.7"
3	007125-04-000	EA	CLAMP - MUFFLER - 1.12"DIAMETER
4	114070-02-02B	EA	SUPPORT - GENERATOR - LEFT
5	114071-02-02B	EA	SUPPORT - GENERATOR - RIGHT
6	128139-03-000	FT	HOSE - FUEL - LOW PERMEABILITY - 1/4" DIAMETER
7	084884-01-000	EA	PLUG - BRASS - 3/8”

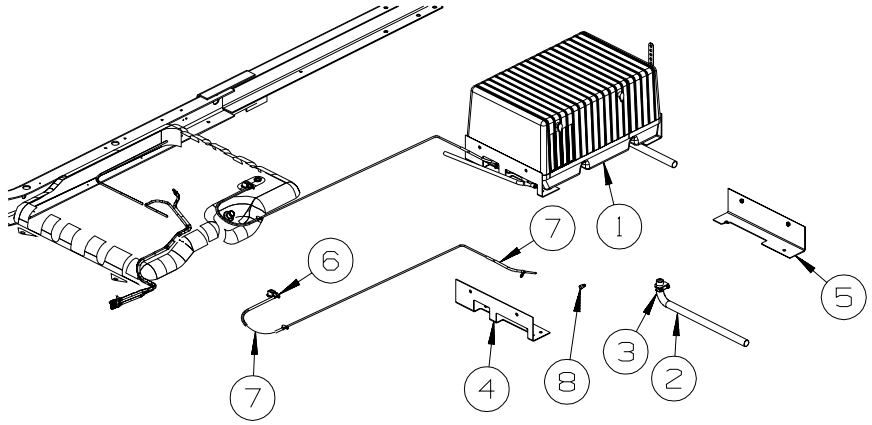

331C
CHEVY

KEY	PART NUMBER	U/M	DESCRIPTION
1	109982-03-000	EA	GENERATOR - 4.0 MICROLITE - ONAN
2	105958-08-000	EA	PIPE - EXHAUST/GENERATOR - 1.5" OD X 3.1" X 19.7"
3	007125-04-000	EA	CLAMP - MUFFLER - 1.12"DIAMETER
4	114070-02-02B	EA	SUPPORT - GENERATOR - LEFT
5	114071-02-02B	EA	SUPPORT - GENERATOR - RIGHT
6	068382-06-000	EA	BUSHING - 3/8"MPT X 1/8"FPT - BRASS
6	114253-01-000	EA	ELBOW - 1/4 SINGLE BARB X 1/8 MPT
7	128139-03-000	FT	HOSE - FUEL - LOW PERMEABILITY - 1/4" DIAMETER
8	084884-01-000	EA	PLUG - BRASS - 3/8”

COPYRIGHT © 2006 WINNEBAGO INDUSTRIES INC.

GENERATOR GROUP (CONTINUED)

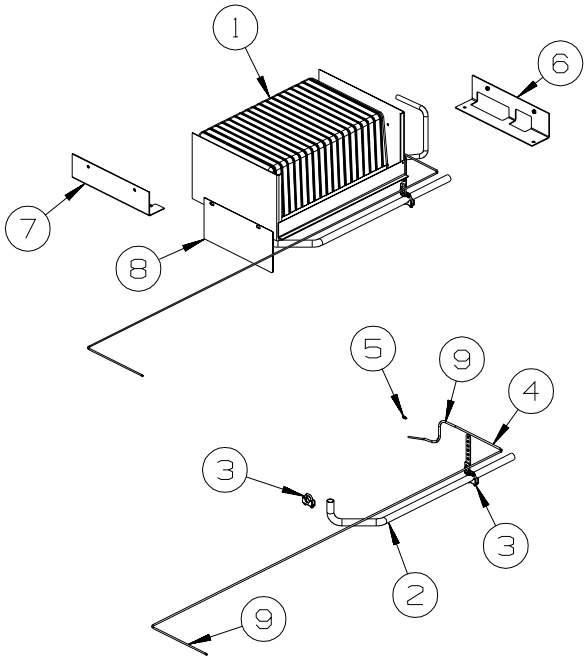

332G

KEY	PART NUMBER	U/M	DESCRIPTION
1	109982-03-000	EA	GENERATOR - 4.0 MICROLITE - ONAN
2	127920-01-000	EA	PIPE - EXHAUST - GENERATOR
3	007125-03-000	EA	CLAMP - MUFFLER - 1.5"DIAMETER
4	007131-01-000	EA	HANGER - TAILPIPE - 6 SLOTS
5	084884-01-000	EA	PLUG - BRASS - 3/8”
6	114071-02-02B	EA	SUPPORT - GENERATOR - RIGHT
7	114070-02-02B	EA	SUPPORT - GENERATOR - LEFT
8	111848-07-02B	EA	SHIELD - HEAT - EXHAUST - E-COATED
9	128139-03-000	FT	HOSE - FUEL - LOW PERMEABILITY - 1/4" DIAMETER

COPYRIGHT © 2006 WINNEBAGO INDUSTRIES INC.

HEATING & A/C GROUP

FURNACE

KEY	PART NUMBER	U/M	DESCRIPTION
*	139980-01-000	EA	FURNACE - 25000 BTU - SF QUIET - SUBURBAN SF-25 2320J - 322R, 324V, 325F
*	139980-02-000	EA	FURNACE-30000BTU-SF QUIET-SBRBN SF-30 2321J-322E/326A/327L/329B/SB/329K/331C/S/331K/332G
	139980-07-000	EA	ADAPTOR - VENT BOTTOM SF-30/35 - 332G
	139980-08-000	EA	GASKET - BOTTOM VENT SF-30/35 - 332G
	098668-23-000	EA	DOOR - ACCESS - FURNACE - BRIGHT WHITE
	009198-01-000	FT	DUCT - HEAT - FLEXIBLE - 4" ID X 25'
	009198-02-000	FT	DUCT - HEAT - FLEXIBLE - 2" ID X 25'
	056464-09-000	EA	REGISTER W/DAMPER - 4" DIAMETER - PLASTIC - BEIGE
	056464-10-000	EA	REGISTER W/O DAMPER - 4" DIAMETER - PLASTIC - BEIGE
	056464-11-000	EA	REGISTER W/DAMPER - 4" DIAMETER - PLASTIC - OFF WHITE
	137965-01-02A	EA	REGISTER - 11.2" X 3.6"(9.7 X 2.1"R/O) W/O DAMPER- ANT PWTR - 332G
	069636-02-000	EA	CONNECTOR - DUCT - 4" ID
	009200-01-000	EA	TAPE - FURNACE - 1 1/2"
	089367-01-000	EA	TEE - 4" OD - 7" LONG - METAL
	089367-02-000	EA	TEE - 4" X 2" X 4"
	024990-11-000	EA	OUTLET - DEFROSTER - W/SWIVEL - 2” SLEEVE/4” OD - CAD CRM - 332G FROM: 00-00-00 THRU: 09-05-05
	157225-01-03A	EA	OUTLET - DEFROSTER - W/SWIVEL - 2" SLEEVE/4"OD-CADDY CREAM - 332G FROM: 09-06-05 THRU: 99-99-99
	093614-01-02A	EA	GRILL - AIR RETURN - 15.9” X 7.9” - BIEGE
	093614-11-01A	EA	GRILLE - AIR RETURN - 13.9" X 7.9" - BEIGE

***COMPONENT PARTS LISTED LATER IN THIS GROUP**

COPYRIGHT © 2006 WINNEBAGO INDUSTRIES INC.

HEATING & A/C GROUP (CONTINUED)

COMPONENT PARTS FOR FURNACE

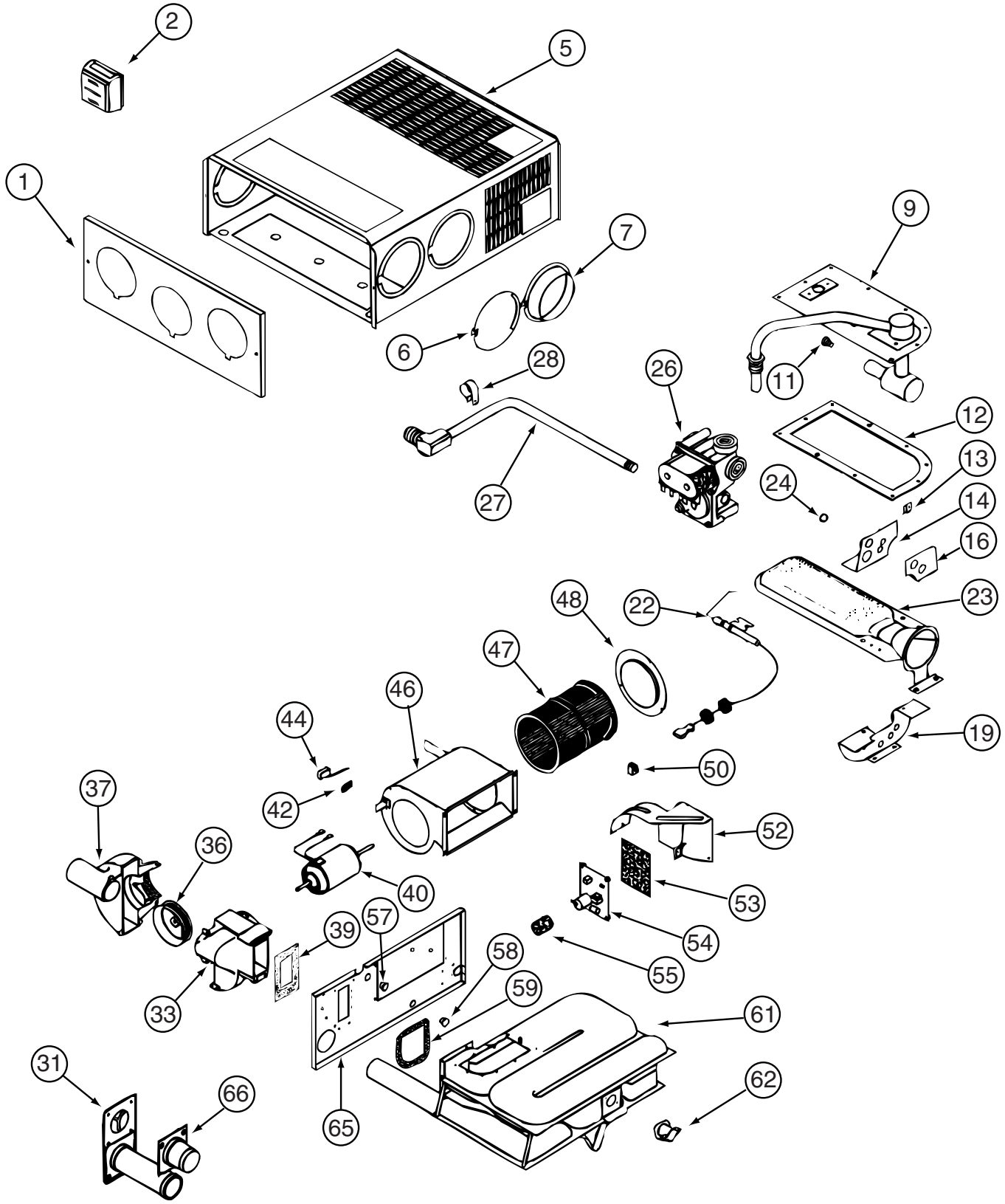

139980-01-000

139980-02-000

COPYRIGHT © 2006 WINNEBAGO INDUSTRIES INC.

HEATING & A/C GROUP (CONTINUED)

COMPONENT PARTS FOR FURNACE (CONTINUED)

139980-01-000 (CONTINUED)

KEY	PART NUMBER	U/M	DESCRIPTION	VENDOR NO.
9	139980-01-700	EA	MANIFOLD ASSEMBLY	171571
11	090039-01-703	EA	ORIFICE-MAIN BURNER	180193
12	098668-22-703	EA	GASKET - BURNER ACCESS COVER	070811
22	139980-01-701	EA	ELECTRODE	232286
23	098668-01-703	EA	BURNER ASSEMBLY	010762
26	098668-01-718	EA	VALVE-GAS SF S.N.974903079	161122
27	139980-01-702	EA	PIPE ASSEMBLY/GAS INLET	171574
31	098668-01-707	EA	TUBE ASSEMBLY, EXHAUST W/CAP	260231
33	139980-01-703	EA	HOUSING/COMB. - FRONT/HALF	390852
36	098668-01-706	EA	WHEEL-COMBUSTION AIR	350184
37	139980-01-704	EA	HOUSING/COMB. - REAR/HALF	390848
39	139980-01-705	EA	GASKET/FIREWALL-COMB AIR	071084
40	139980-01-706	EA	MOTOR ASSEMBLY W/GASKET	232682
42	101990-01-714	EA	GASKET-MICROSWITCH	230877
44	098668-21-700	EA	SWITCH-MICRO-W/O FLAG 3 1/4"	232261
46	139980-01-708	EA	BLOWER ASSEMBLY - ROOM AIR	390739BK
47	098668-01-711	EA	WHEEL-BLOWER, ROOM AIR	350129
48	139980-01-709	EA	ORFICE RING	390696
50	139980-01-710	EA	SWITCH - ON/OFF	232351
52	139980-01-711	EA	PANEL ASSEMBLY-MODULE BD	101663
53	139980-01-712	EA	INSULATOR - MODULE BD	070807
54	098668-22-705	EA	MODULE BD W/RELAY TIME DELAY	520820
55	139980-01-713	EA	CAP/INSULATOR-MODULE BD	070973
57	139980-01-714	EA	BUSHING - UNIVERSAL	070362
58	139980-01-715	EA	BUSHING - STRAIN RELIEF	231809
59	098668-01-716	EA	GASKET-FIREWALL,CHAMBER SIDE	070808
61	139980-01-716	EA	CHAMBER ASSEMBLY - FINAL	021149BK
62	098668-21-701	EA	SWITCH - LIMIT	232504
66	098668-01-713	EA	TUBE ASSEMBLY, INTAKE	051248
	098668-19-700	EA	DOOR/CABINET ACCESS	101888
			CONTACT WINNEBAGO PART SALES FOR UNLISTED COMPONENT(S)	

139980-02-000 (CONTNUED)

KEY	PART NUMBER	U/M	DESCRIPTION	VENDOR NO.
9	139980-01-700	EA	MANIFOLD ASSEMBLY	171571
11	092300-02-701	EA	ORIFICE-MAIN BURNER (NT-30BW	180214
12	098668-22-703	EA	GASKET - BURNER ACCESS COVER	070811
22	139980-01-701	EA	ELECTRODE	232286
23	098668-02-700	EA	BURNER ASSEMBLY,SF-30 & SF35	010745
26	098668-01-718	EA	VALVE-GAS SF S.N.974903079	161122
27	139980-01-702	EA	PIPE ASSEMBLY/GAS INLET	171574
31	098668-01-707	EA	TUBE ASSEMBLY, EXHAUST W/CAP	260231
33	139980-01-703	EA	HOUSING/COMB. - FRONT/HALF	390852
36	098668-01-706	EA	WHEEL-COMBUSTION AIR	350184
37	139980-01-704	EA	HOUSING/COMB. - REAR/HALF	390848
39	139980-01-705	EA	GASKET/FIREWALL-COMB AIR	071084
40	139980-01-706	EA	MOTOR ASSEMBLY W/GASKET	232682
42	101990-01-714	EA	GASKET-MICROSWITCH	230877
44	098668-21-700	EA	SWITCH-MICRO-W/O FLAG 3 1/4"	232261
46	139980-01-708	EA	BLOWER ASSEMBLY - ROOM AIR	390739BK
47	098668-01-711	EA	WHEEL-BLOWER, ROOM AIR	350129
48	139980-01-709	EA	ORFICE RING	390696
50	139980-01-710	EA	SWITCH - ON/OFF	232351
52	139980-01-711	EA	PANEL ASSEMBLY-MODULE BD	101663
53	139980-01-712	EA	INSULATOR - MODULE BD	070807
54	098668-22-705	EA	MODULE BD W/RELAY TIME DELAY	520820
55	139980-01-713	EA	CAP/INSULATOR-MODULE BD	070973
57	139980-01-714	EA	BUSHING - UNIVERSAL	070362
58	139980-01-715	EA	BUSHING - STRAIN RELIEF	231809
59	098668-01-716	EA	GASKET-FIREWALL,CHAMBER SIDE	070808
61	139980-01-716	EA	CHAMBER ASSEMBLY - FINAL	021149BK
62	098668-21-701	EA	SWITCH - LIMIT	232504
66	098668-01-713	EA	TUBE ASSEMBLY, INTAKE	051248
			CONTACT WINNEBAGO PART SALES FOR UNLISTED COMPONENT(S)	

COPYRIGHT © 2006 WINNEBAGO INDUSTRIES INC.

HEATING & A/C GROUP (CONTINUED)

ROOF

KEY	PART NUMBER	U/M	DESCRIPTION
*	131185-03-01A	EA	A/C - ROOF - 13,500 BTU - MACH 3 WHITE - A/C ROOF-ONE 13,500 BTU
*	131188-03-01A	EA	A/C/ROOF - 14,800 BTU/MACH 15 - NEW MODEL #8335B676 - WHT - A/C ROOF AIR (1) 14,800 BTU
*	131188-04-01A	EA	A/C/ROOF - 14,800 BTU/HEAT PUMP - NEW MODEL #8535B676- WHT - AC HEAT PUMP-1
*	131184-01-01A	EA	CEILING ASSEMBLY - A/C DUCTED - WHITE
*	131184-05-01A	EA	CEILING ASSEMBLY - HEAT PUMP - WHITE - AC HEAT PUMP-1
	131184-02-01A	EA	BOARD - DIVIDER - SILVER

***COMPONENT PARTS LISTED LATER IN THIS GROUP**

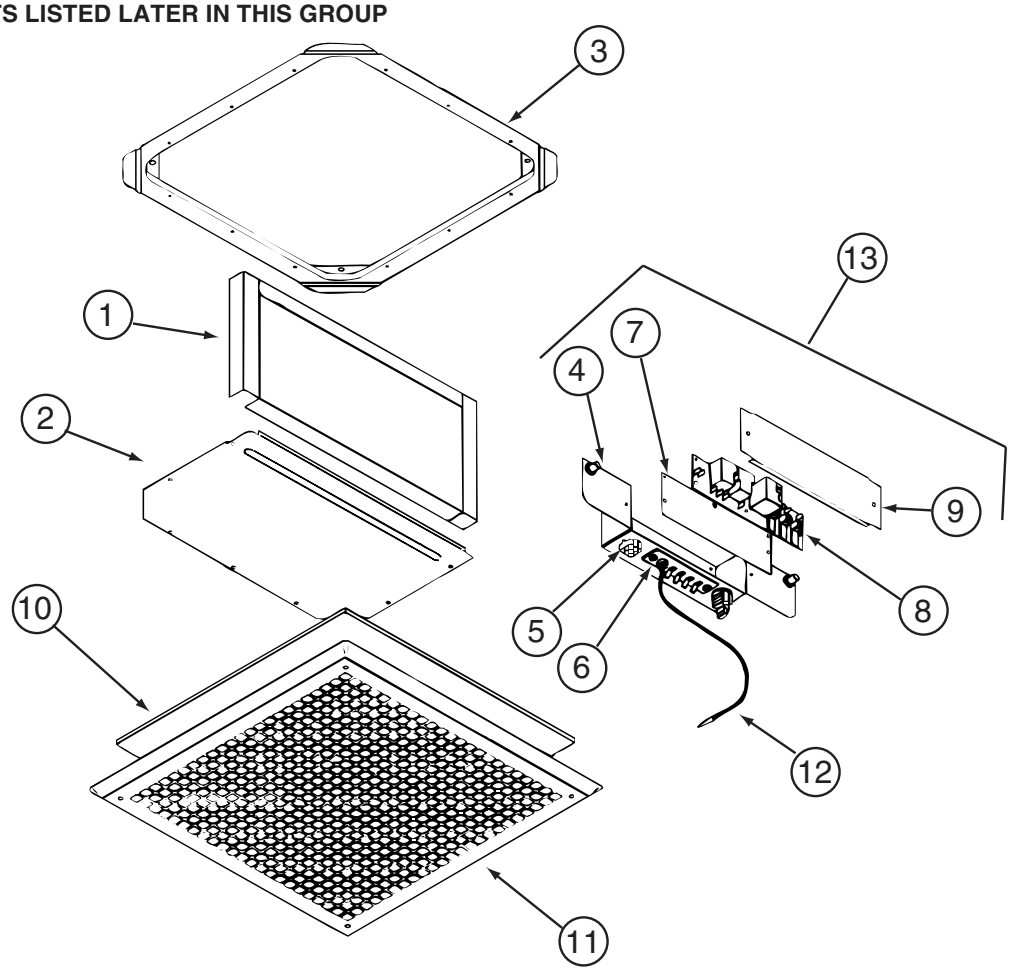

COMPONENT PARTS FOR ROOF

131184-01-01A

KEY	PART NUMBER	U/M	DESCRIPTION	VENDOR NO.
1	131184-01-707	EA	DUCT DIVIDER	8330-3501
5	131184-01-700	EA	PLUG ASSEMBLY	7330A389
6	131184-01-701	EA	TERMINAL BOARD	7330B3201
7	131184-01-702	EA	ISOLATOR - BLANK	7330C365
8	108892-01-702	EA	BOARD-P.C.	7330A3211
10	108892-01-703	EA	FILTER	6798A3761
11	108892-01-704	EA	GRILLE 16 3/8X16 3/8 RETURN	6798-3041
12	131184-01-704	EA	COIL SENSOR	7330-6111
13	131184-01-705	EA	JUNCTION BOX ASSEMBLY	7330B5551
	131184-01-703	EA	SMALL PARTS PKG	8330-5961
			CONTACT WINNEBAGO PART SALES FOR UNLISTED COMPONENT(S)	

COPYRIGHT © 2006 WINNEBAGO INDUSTRIES INC.

HEATING & A/C GROUP (CONTINUED)

COMPONENT PARTS FOR ROOF (CONTINUED)

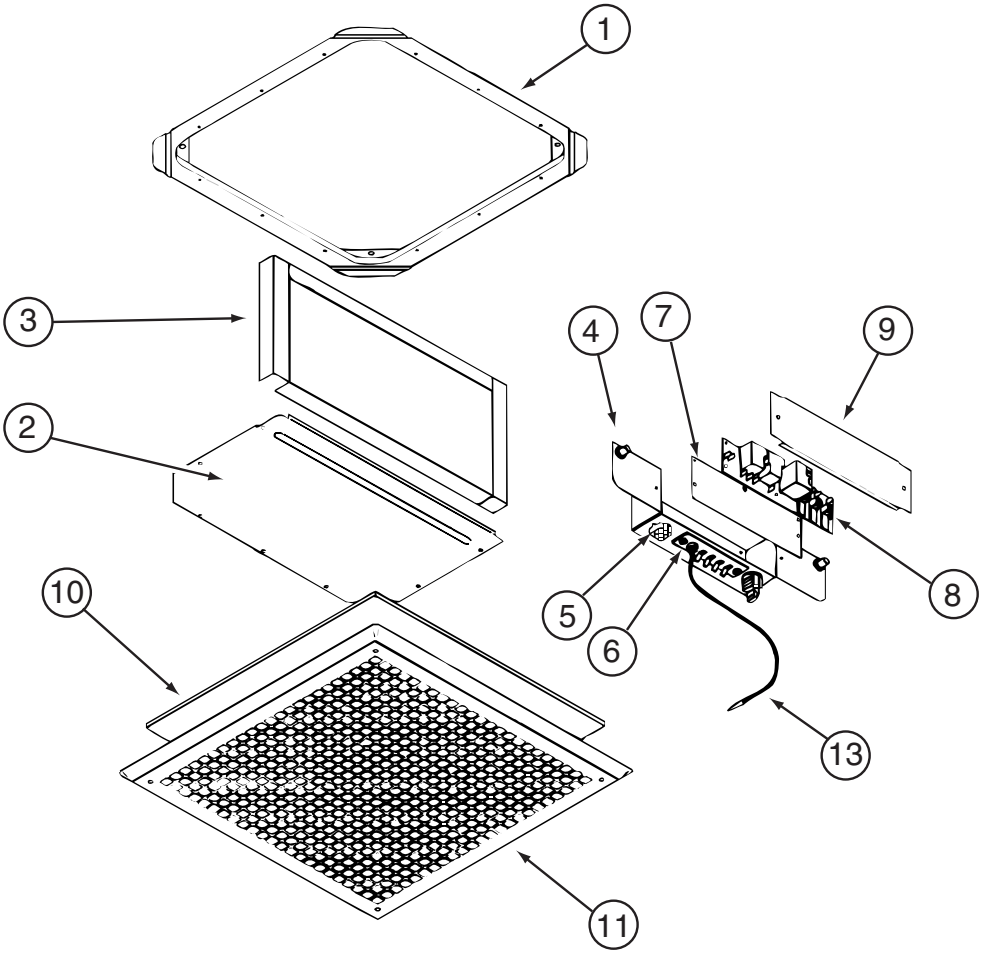

131184-05-01A

KEY	PART NUMBER	U/M	DESCRIPTION	VENDOR NO.
4	131184-05-700	EA	BOX - JUNCTION	8530-5091
5	131184-04-700	EA	PLUG ASSEMBLY	7530A340
6	131184-04-702	EA	BOARD - TERMINAL	7530B3201
7	131184-01-702	EA	ISOLATOR - BLANK	7330C365
8	131184-04-705	EA	BOARD - P.C.	7330B3311
10	108892-01-703	EA	FILTER	6798A3761
11	108892-01-704	EA	GRILLE 16 3/8X16 3/8 RETURN	6798-3041
13	105620-12-719	EA	COIL SENSOR	7330A3231
	131184-01-703	EA	SMALL PARTS PKG	8330-5961
			CONTACT WINNEBAGO PART SALES FOR UNLISTED COMPONENT(S)	

COPYRIGHT © 2006 WINNEBAGO INDUSTRIES INC.

HEATING & A/C GROUP (CONTINUED)

COMPONENT PARTS FOR ROOF (CONTINUED)

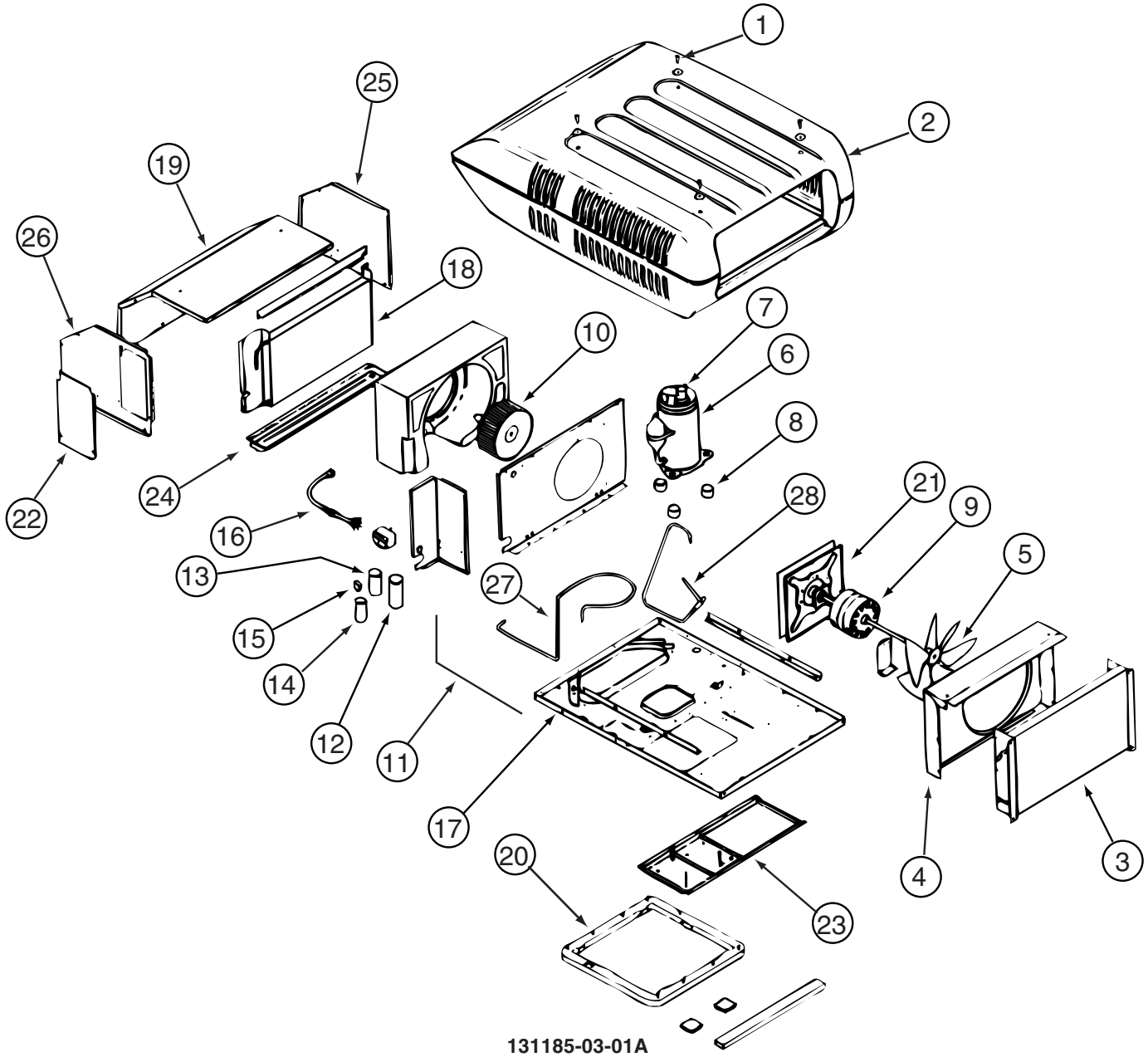

131185-03-01A

KEY	PART NUMBER	U/M	DESCRIPTION	VENDOR NO.
2	131185-03-700	EA	SHROUD-ROOF AIR W/HAIL GUARD	8333-4161
3	131185-01-700	EA	CONDENSER COIL	1452A1451
5	093763-01-712	EA	BLADE-FAN-CONDENSER	6733-3221
6	105620-01-706	EA	MOUNTING PKG.,COMP., 3 PER	6759-3081
6	131185-03-701	EA	COMPRESSOR - (PANASONIC)	1450A2059
7	131185-03-702	EA	OVERLOAD	1450-0141
9	131185-01-701	EA	MOTOR (115V, 60HZ)	1468-3069
10	131185-01-702	EA	BLOWER WHEEL PACKAGE	1472-1091
12	105620-12-725	EA	COMPRESSOR RUN CAPACITOR	1499-5731
13	108889-01-708	EA	CAPACITOR-FAN, 7.5MFD. 370U	1499-5461
15	105620-10-704	EA	START COMPACITOR	1497-0861
15	105620-10-705	EA	PTCR (START DEVICE) - W/CAP.	8333A9021
18	131185-01-703	EA	EVAPORATOR COIL	1452A1491
20	037648-01-714	EA	GASKET PACKAGE	8332-3301
21	131185-01-704	EA	MOTOR MOUNT & SEAL KIT	8333-5151
27	131185-03-704	EA	LINE - SUCTION	8333B530
28	131185-03-705	EA	LINE - DISCARGE	8333-131
	093306-01-701	EA	DECAL PACKAGE, LEFT & RIGHT	6798B3591
	131185-03-703	EA	PAD/FILLER (COND AIR SEAL)	8332-3301
			CONTACT WINNEBAGO PART SALES FOR UNLISTED COMPONENT(S)	

COPYRIGHT © 2006 WINNEBAGO INDUSTRIES INC.

HEATING & A/C GROUP (CONTINUED)

COMPONENT PARTS FOR ROOF (CONTINUED)

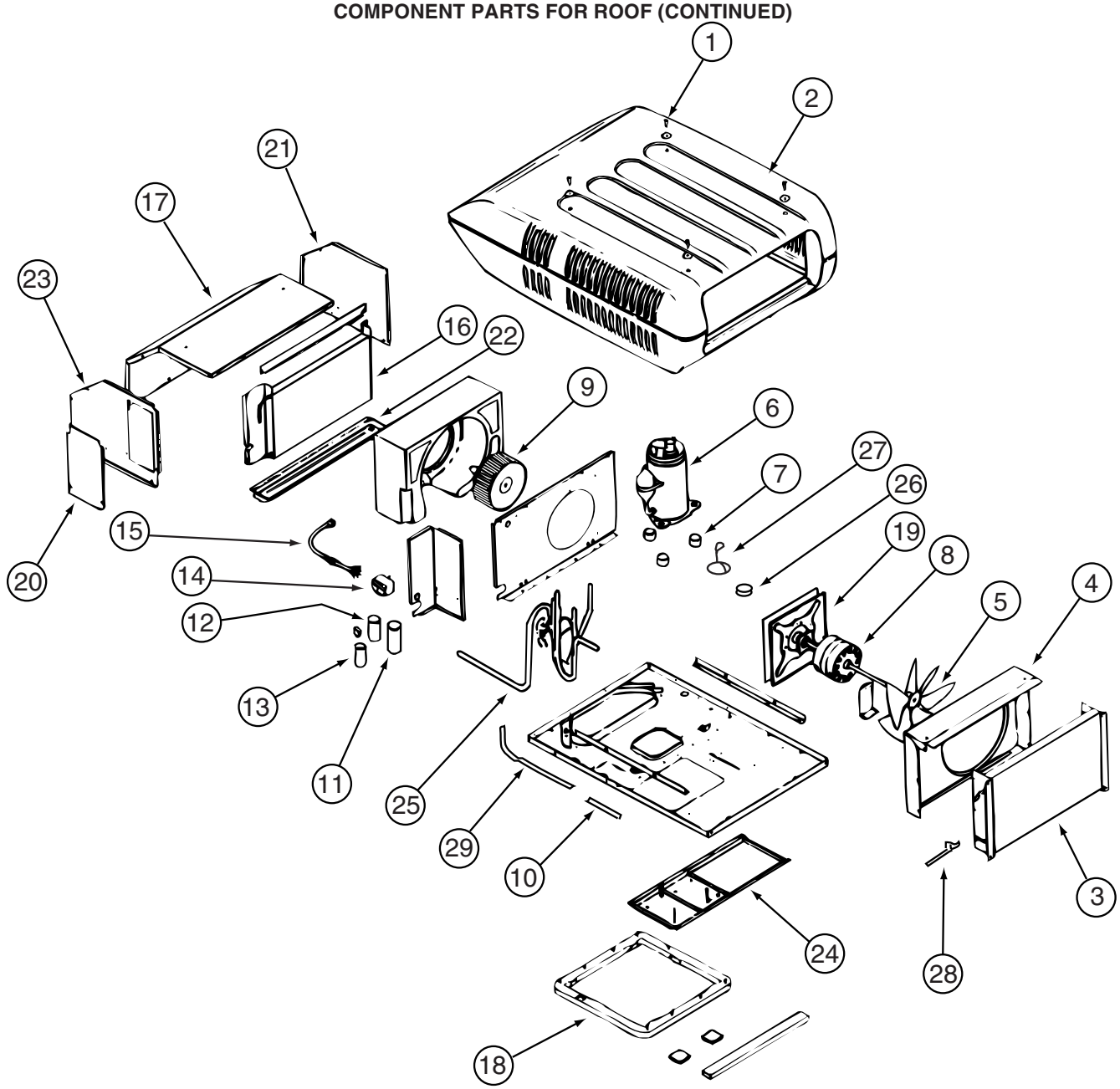

131188-03-01A

KEY	PART NUMBER	U/M	DESCRIPTION	VENDOR NO.
2	131185-03-700	EA	SHROUD-ROOF AIR W/HAIL GUARD	8333-4161
3	115219-01-700	EA	COIL-CONDENSER	1452A1321
5	093763-01-712	EA	BLADE-FAN-CONDENSER	6733-3221
6	131188-01-700	EA	COMPRESSOR - TECUMSEH	1450A2609
7	105620-01-706	EA	MOUNTING PKG.,COMP., 3 PER	6759-3081
8	131185-01-701	EA	MOTOR (115V, 60HZ)	1468-3069
9	131185-01-702	EA	BLOWER WHEEL PACKAGE	1472-1091
11	131188-01-701	EA	RUN CAP. (COMP-40MFD/370V)	1499-5721
12	108889-01-708	EA	CAPACITOR-FAN, 7.5MFD. 370U	1499-5461
13	126859-01-704	EA	CAPACITOR - START	1497-0871
14	091225-01-709	EA	RELAY-START	1497-4131
16	131186-01-701	EA	EVAPORATOR COIL	1452-1521
18	037648-01-714	EA	GASKET PACKAGE	8332-3301
19	131185-01-704	EA	MOTOR MOUNT & SEAL KIT	8333-5151
	093306-01-701	EA	DECAL PACKAGE, LEFT & RIGHT	6798B3591
	108889-01-710	EA	PAD-FILLER, CONDENSER SEAL	6759B3971
	131188-01-702	EA	LINE - SUCTION	7335A134
	131188-01-703	EA	LINE - DISCHARGE	7335A135
			CONTACT WINNEBAGO PART SALES FOR UNLISTED COMPONENT(S)	

COPYRIGHT © 2006 WINNEBAGO INDUSTRIES INC.

HEATING & A/C GROUP (CONTINUED)

COMPONENT PARTS FOR ROOF (CONTINUED)

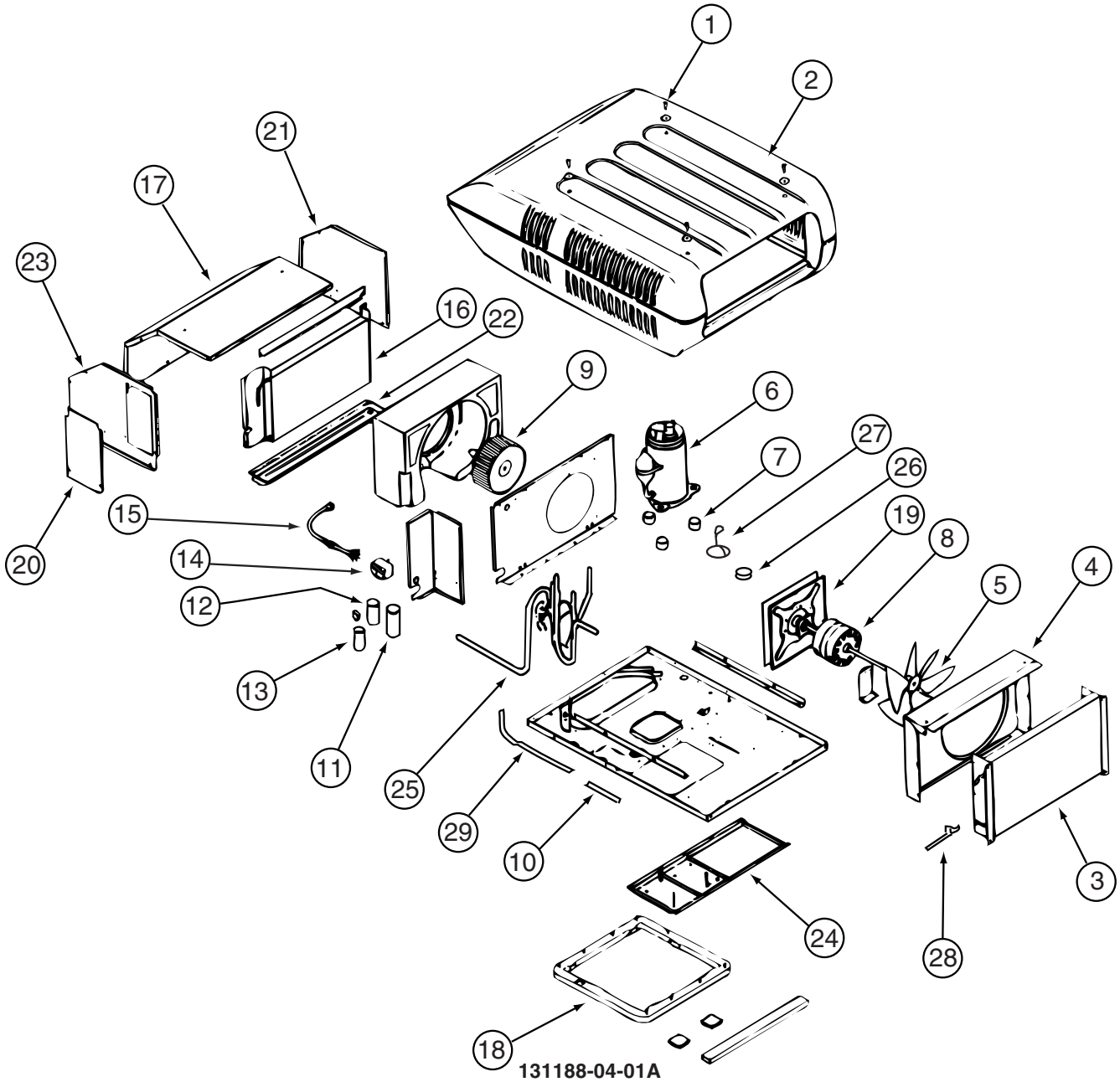

131188-04-01A

KEY	PART NUMBER	U/M	DESCRIPTION	VENDOR NO.
3	131188-02-700	EA	CONDENSER COIL	1452-1441
5	093763-01-712	EA	BLADE-FAN-CONDENSER	6733-3221
6	131188-02-701	EA	COMPRESSOR(TECUMSEH-RK225AT)	1450A2069
7	105620-01-706	EA	MOUNTING PKG.,COMP., 3 PER	6759-3081
8	131185-01-701	EA	MOTOR (115V, 60HZ)	1468-3069
9	131185-01-702	EA	BLOWER WHEEL PACKAGE	1472-1091
10	131188-02-702	EA	RESTRICTOR - BY FLOW	1454-2501
11	131188-01-701	EA	RUN CAP. (COMP-40MFD/370V)	1499-5721
12	093763-01-704	EA	CAPACITOR-FAN (INDOOR MOTOR)	1499-5461
13	131188-02-703	EA	CAPACITOR-START(21-25MFD)	1497-0211
14	091225-01-709	EA	RELAY-START	1497-4131
16	131186-01-701	EA	EVAPORATOR COIL	1452-1521
18	037648-01-714	EA	GASKET PACKAGE	8332-3301
19	131185-01-704	EA	MOTOR MOUNT & SEAL KIT	8333-5151
25	131188-02-704	EA	VALVE/REVERSE ASSEMBLY	7535A5301
26	105620-12-708	EA	COIL - SOLENOID	1460-1081
27	131188-02-705	EA	WIRE HARNESS F/SOLENOID	7535-109
28	131188-02-706	EA	SWITCH - FREEZE	1460-2041
29	131188-02-707	EA	LIQUID LINE	7535-135

CONTACT WINNEBAGO PART SALES FOR UNLISTED COMPONENT(S)

COPYRIGHT © 2006 WINNEBAGO INDUSTRIES INC.

INTERIOR FINISH GROUP

MOLDINGS & TRIMS

PORTSMOUTH OAK, SIERRA MAPLE

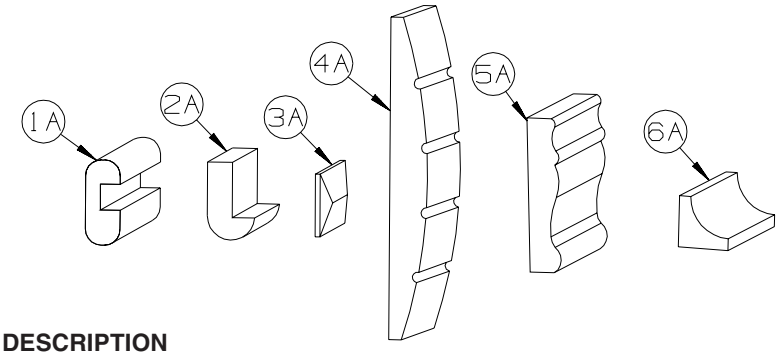

KEY	PART NUMBER	U/M	DESCRIPTION
1A	M09412-62-N42	EA	MOLDING/SHELF EDGE - .6" X 1.3" X 96" - PORTSMOUTH OAK
1A	M09412-62-M52	EA	MOLDING/SHELF EDGE - .6" X 1.3" X 96" - CHERRY - CONCERT CHERRY
1A	M09412-62-M62	EA	MOLDING/SHELF EDGE - .6" X 1.3" X 96" - WASHED MAPLE - WASHED MAPLE
1A	M09412-62-RC3	EA	MOLDING/SHELF EDGE - .6" X 1.3" X 96" - HONEY CHERRY - HONEY CHERRY
1A	M09412-62-SA3	EA	MOLDING/SHELF EDGE - .6" X 1.3" X 96" - MAPLE - SIERRA MAPLE
2A	M09450-77-PC0	EA	MOLDING - TRIM/HDWD W/LIP -.4"X3.2"X79.6" - PORTSMOUTH OAK
2A	M09450-77-PC1	EA	MOLDING - TRIM/HDWD W/LIP -.4"X3.2"X79.6" - CONCERT CHERRY
2A	M09450-77-PC2	EA	MOLDING - TRIM/HDWD W/LIP -.4"X3.2"X79.6" - WASHED MAPLE
2A	M09450-77-RC3	EA	MOLDING - TRIM/HDWD W/LIP -.4"X3.2"X79.6" - HONEY CHERRY
2A	M09501-31-TG0	EA	MOLDING/TRIM - .8" X 3.5" X 86.2" - PORTSMOUTH OAK
2A	M09501-31-TG1	EA	MOLDING/TRIM - .8" X 3.5" X 86.2" - CONCERT CHERRY
2A	M09501-31-TG2	EA	MOLDING/TRIM - .8" X 3.5" X 86.2" - WASHED MAPLE
2A	M09501-31-TG3	EA	MOLDING/TRIM - .8" X 3.5" X 86.2" - HONEY CHERRY
2A	M09501-31-TD3	EA	MOLDING/TRIM - .8" X 3.5" X 86.2" - SIERRA MAPLE
2A	M09501-32-TD3	EA	MOLDING/TRIM - W/NOTCH - .8" X 2.5" X 86.2"
2A	M09501-32-TG0	EA	MOLDING/TRIM - W/NOTCH - .8" X 2.5" X 86.2" - PORTSMOUTH OAK
2A	M09501-32-TG1	EA	MOLDING/TRIM - W/NOTCH - .8" X 2.5" X 86.2"-CONCERT CHERRY
2A	M09501-32-TG2	EA	MOLDING/TRIM - W/NOTCH - .8" X 2.5" X 86.2" - WASHED MAPLE,
2A	M09501-32-TG3	EA	MOLDING/TRIM - W/NOTCH - .8" X 2.5" X 86.2" - HONEY CHERRY
2A	M09503-52-T77	EA	MOLDING/TRIM - .75" X 1.2" X 86.5" - PORTSMOUTH OAK
2A	M09503-52-T78	EA	MOLDING/TRIM - .75" X 1.2" X 86.5" - CONCERT CHERRY
2A	M09503-52-T79	EA	MOLDING/TRIM - .75" X 1.2" X 86.5" - WASHED MAPLE
2A	M09503-52-T80	EA	MOLDING/TRIM - .75" X 1.2" X 86.5" - SIERRA MAPLE
2A	M09511-43-T77	EA	MOLDING - TRIM - W/NOTCH - .8" X 1.4" X 86.3" - PORTSMOUTH OAK
2A	M09511-43-T78	EA	MOLDING - TRIM - W/NOTCH - .8" X 1.4" X 86.3" - CONCERT CHERRY
2A	M09511-43-T79	EA	MOLDING - TRIM - W/NOTCH - .8" X 1.4" X 86.3" - WASHED MAPLE
2A	M09438-25-RA3	EA	MOLDING - HARDWOOD-W/NOTCH - 1.4"X 80.2" - CHERRY/HONEY - HONEY CHERRY
2A	M09511-43-T80	EA	MOLDING - TRIM - W/NOTCH - .8" X 1.4" X 86.3" - SIERRA MAPLE
2A	M09511-44-T77	EA	MOLDING - TRIM - W/NOTCH - 1" X 86.4" - PORTSMOUTH OAK
2A	M09511-44-T78	EA	MOLDING - TRIM - W/NOTCH - 1" X 86.4" - CONCERT CHERRY
2A	M09511-44-T79	EA	MOLDING - TRIM - W/NOTCH - 1" X 86.4" - WASHED MAPLE
2A	M09454-25-RA3	EA	MOLDING - HARDWOOD-W/NOTCH - 1" X 77.6" - HONEY CHERRY
2A	M09511-44-T80	EA	MOLDING - TRIM - W/NOTCH - 1" X 86.4" - SIERRA MAPLE
2A	M09515-72-TD0	EA	MOLDING/TRIM - .8" X 2.2" X 86.1" - PORTSMOUTH OAK
2A	M09515-72-TD1	EA	MOLDING/TRIM - .8" X 2.2" X 86.1" - CONCERT CHERRY
2A	M09515-72-TD2	EA	MOLDING/TRIM - .8" X 2.2" X 86.1" - WASHED MAPLE
2A	M09515-72-TD3	EA	MOLDING/TRIM - .8" X 2.2" X 86.1" - SIERRA MAPLE
2A	M09515-73-TD0	EA	MOLDING/TRIM - 4" X 86.1" - PORTSMOUTH OAK
2A	M09515-73-TD1	EA	MOLDING/TRIM - 4" X 86.1" - CONCERT CHERRY
2A	M09515-73-TD2	EA	MOLDING/TRIM - 4" X 86.1" - WASHED MAPLE
2A	M09515-73-TD3	EA	MOLDING/TRIM - 4" X 86.1" - SIERRA MAPLE
3A	M09471-37-R44	EA	MOLDING - TRIM/VEE - .2" X 1" X 33" - PORTSMOUTH OAK
3A	M09471-37-R45	EA	MOLDING - TRIM/VEE - .2" X 1" X 33" - CONCERT CHERRY
3A	M09471-37-R46	EA	MOLDING - TRIM/VEE - .2" X 1" X 33" - WASHED MAPLE
3A	M09471-37-SD3	EA	MOLDING - TRIM/VEE - .2" X 1" X 33" - HONEY CHERRY
3A	M09471-91-R68	EA	MOLDING - TRIM/VEE - .2" X 1" X 34.4" - PORTSMOUTH OAK
3A	M09471-91-R69	EA	MOLDING - TRIM/VEE - .2" X 1" X 34.4" - CONCERT CHERRY
3A	M09471-91-R76	EA	MOLDING - TRIM/VEE - .2" X 1" X 34.4" - WASHED MAPLE
3A	M09471-91-SA3	EA	MOLDING - TRIM/VEE - .2" X 1" X 34.4" - SIERRA MAPLE
3A	M09477-88-S34	EA	MOLDING - TRIM/VEE - .2" X 1" X 19.9" - WASHED MAPLE
3A	M09477-88-S35	EA	MOLDING - TRIM/VEE - .2" X 1" X 19.9" - SIERRA MAPLE
3A	M09501-30-SD0	EA	MOLDING - TRIM/VEE - .2" X 1" X 35.1" - PORTSMOUTH OAK

COPYRIGHT © 2006 WINNEBAGO INDUSTRIES INC.

INTERIOR FINISH GROUP (CONTINUED)

MOLDINGS & TRIMS (CONTINUED)

KEY	PART NUMBER	U/M	DESCRIPTION
3A	M09501-30-SD1	EA	MOLDING - TRIM/VEE - .2" X 1" X 35.1" - CONCERT CHERRY
3A	M09501-30-SD2	EA	MOLDING - TRIM/VEE - .2" X 1" X 35.1" - WASHED MAPLE
3A	M09501-30-SD3	EA	MOLDING - TRIM/VEE - .2" X 1" X 35.1" - HONEY CHERRY
3A	M09501-37-TG0	EA	MOLDING - TRIM/VEE - .2" X 1" X 19.2" - PORTSMOUTH OAK
3A	M09501-37-TG1	EA	MOLDING - TRIM/VEE - .2" X 1" X 19.2" - CONCERT CHERRY
3A	M09501-37-TG2	EA	MOLDING - TRIM/VEE - .2" X 1" X 19.2" - WASHED MAPLE
3A	M09501-37-TD3	EA	MOLDING - TRIM/VEE - .2" X 1" X 19.2" - SIERRA MAPLE
3A	M09501-37-TG3	EA	MOLDING - TRIM/VEE - .2" X 1" X 19.2" - HONEY CHERRY
3A	M09501-63-T77	EA	MOLDING - TRIM/VEE - .2" X 1" X 15" - PORTSMOUTH OAK
3A	M09501-63-T78	EA	MOLDING - TRIM/VEE - .2" X 1" X 15" - CONCERT CHERRY
3A	M09501-63-T79	EA	MOLDING - TRIM/VEE - .2" X 1" X 15" - WASHED MAPLE
3A	M09501-63-T80	EA	MOLDING - TRIM/VEE - .2" X 1" X 15" - SIERRA MAPLE
3A	M09503-62-TG0	EA	MOLDING - TRIM/VEE - .2" X 1" X 26.3" - PORTSMOUTH OAK
3A	M09503-62-TG1	EA	MOLDING - TRIM/VEE - .2" X 1" X 26.3" - CONCERT CHERRY
3A	M09503-62-TG2	EA	MOLDING - TRIM/VEE - .2" X 1" X 26.3" - WASHED MAPLE
3A	M09503-62-TG3	EA	MOLDING - TRIM/VEE - .2" X 1" X 26.3" - HONEY CHERRY
3A	M09511-90-TG0	EA	MOLDING - TRIM/VEE - .2" X 1" X 42.1" - PORTSMOUTH OAK
3A	M09511-90-TG1	EA	MOLDING - TRIM/VEE - .2" X 1" X 42.1" - CONCERT CHERRY
3A	M09511-90-TG3	EA	MOLDING - TRIM/VEE - .2" X 1" X 42.1" - HONEY CHERRY
3A	M09511-90-TG2	EA	MOLDING - TRIM/VEE - .2" X 1" X 42.1" - WASHED MAPLE
3A	M09515-71-T78	EA	MOLDING - TRIM/VEE - .2" X 1" X 14.9" - CONCERT CHERRY
3A	M09515-71-T77	EA	MOLDING - TRIM/VEE - .2" X 1" X 14.9" - PORTSMOUTH OAK
3A	M09515-71-T80	EA	MOLDING - TRIM/VEE - .2" X 1" X 14.9" - SIERRA MAPLE
3A	M09515-71-T79	EA	MOLDING - TRIM/VEE - .2" X 1" X 14.9" - WASHED MAPLE
3A	M09520-15-TD0	EA	MOLDING - TRIM/VEE - .2" X 1" X 15.3" - PORTSMOUTH OAK
3A	M09520-15-TD1	EA	MOLDING - TRIM/VEE - .2" X 1" X 15.3" - CONCERT CHERRY
3A	M09520-15-TD2	EA	MOLDING - TRIM/VEE - .2" X 1" X 15.3" - WASHED MAPLE
3A	M09520-15-TD3	EA	MOLDING - TRIM/VEE - .2" X 1" X 15.3" - SIERRA MAPLE
3A	M09520-96-T59	EA	MOLDING - TRIM/VEE - .2" X 1" X 32.7" - PORTSMOUTH OAK
3A	M09520-96-T60	EA	MOLDING - TRIM/VEE - .2" X 1" X 32.7" - CONCERT CHERRY
3A	M09520-96-T61	EA	MOLDING - TRIM/VEE - .2" X 1" X 32.7" - WASHED MAPLE
3A	M09520-96-TP0	EA	MOLDING - TRIM/VEE - .2" X 1" X 32.7" - SIERRA MAPLE
3A	M09511-32-T77	EA	MOLDING - TRIM/VEE - .4" X 1" X 26.8" - PORTSMOUTH OAK
3A	M09511-32-T78	EA	MOLDING - TRIM/VEE - .4" X 1" X 26.8" - CONCERT CHERRY
3A	M09511-32-T79	EA	MOLDING - TRIM/VEE - .4" X 1" X 26.8" - WASHED MAPLE
3A	M09511-32-T80	EA	MOLDING - TRIM/VEE - .4" X 1" X 26.8" - SIERRA MAPLE
3A	M09511-84-T77	EA	MOLDING - TRIM/VEE - .4" X 1" X 13.5" - PORTSMOUTH OAK
3A	M09511-84-T78	EA	MOLDING - TRIM/VEE - .4" X 1" X 13.5" - CONCERT CHERRY
3A	M09511-84-T79	EA	MOLDING - TRIM/VEE - .4" X 1" X 13.5" - WASHED MAPLE
3A	M09511-84-T80	EA	MOLDING - TRIM/VEE - .4" X 1" X 13.5" - SIERRA MAPLE
3A	M09511-85-T77	EA	MOLDING - TRIM/VEE - .4" X 1" X 10.7" - PORTSMOUTH OAK
3A	M09511-85-T78	EA	MOLDING - TRIM/VEE - .4" X 1" X 10.7" - CONCERT CHERRY
3A	M09511-85-T79	EA	MOLDING - TRIM/VEE - .4" X 1" X 10.7" - WASHED MAPLE
3A	M09511-85-T80	EA	MOLDING - TRIM/VEE - .4" X 1" X 10.7" - SIERRA MAPLE
3A	M09511-86-T77	EA	MOLDING - TRIM/VEE - .4" X 1" X 28.3" - PORTSMOUTH OAK
3A	M09511-86-T78	EA	MOLDING - TRIM/VEE - .4" X 1" X 28.3" - CONCERT CHERRY
3A	M09511-86-T79	EA	MOLDING - TRIM/VEE - .4" X 1" X 28.3" - WASHED MAPLE
3A	M09511-86-T80	EA	MOLDING - TRIM/VEE - .4" X 1" X 28.3" - SIERRA MAPLE
3A	M09477-63-S46	EA	MOLDING - TRIM/VEE - .4" X 1" X 64.1" - PORTSMOUTH OAK - BATH DOOR TRIM
3A	M09477-63-S47	EA	MOLDING - TRIM/VEE - .4" X 1" X 64.1" - CONCERT CHERRY - BATH DOOR TRIM
3A	M09477-63-S48	EA	MOLDING - TRIM/VEE - .4" X 1" X 64.1" - WASHED MAPLE - BATH DOOR TRIM
3A	M09477-63-SR0	EA	MOLDING - TRIM/VEE - .4" X 1" X 64.1" - SIERRA MAPLE - BATH DOOR TRIM
3A	M09477-64-S46	EA	MOLDING - TRIM/VEE - .4" X 1" X 14.9" - PORTSMOUTH OAK - BATH DOOR TRIM
3A	M09477-64-S47	EA	MOLDING - TRIM/VEE - .4" X 1" X 14.9" - CONCERT CHERRY - BATH DOOR TRIM
3A	M09477-64-S48	EA	MOLDING - TRIM/VEE - .4" X 1" X 14.9" - WASHED MAPLE - BATH DOOR TRIM
3A	M09477-64-SR0	EA	MOLDING - TRIM/VEE - .4" X 1" X 14.9" - SIERRA MAPLE - BATH DOOR TRIM
4A	M09462-54-R89	EA	MOLDING - FLUTED, CURVED - .6" X 6" X 82.7" - PORTSMOUTH OAK
4A	M09462-54-R90	EA	MOLDING - FLUTED, CURVED - .6" X 6" X 82.7" - CONCERT CHERRY
4A	M09462-54-R91	EA	MOLDING - FLUTED, CURVED - .6" X 6" X 82.7" - WASHED MAPLE
4A	M09462-54-RE3	EA	MOLDING - FLUTED, CURVED - .6" X 6" X 82.7" - HONEY CHERRY

COPYRIGHT © 2006 WINNEBAGO INDUSTRIES INC.

INTERIOR FINISH GROUP (CONTINUED)

MOLDINGS & TRIMS (CONTINUED)

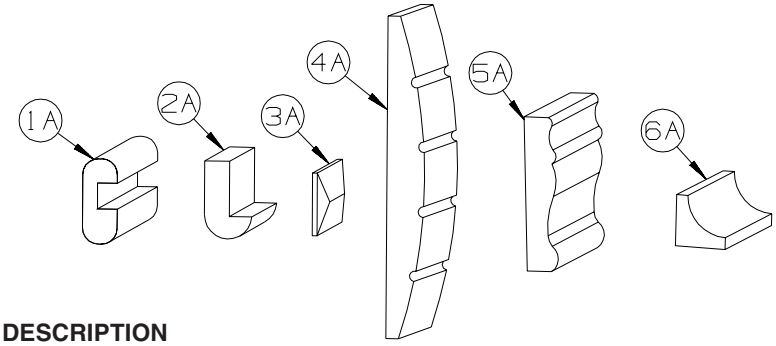

KEY	PART NUMBER	U/M	DESCRIPTION
5A	M09462-66-R74	EA	TRIM - RAIL - .5” X 2.4” X 96” - PORTSMOUTH OAK
5A	M09462-66-R75	EA	TRIM - RAIL - .5” X 2.4” X 96” - CONCERT CHERRY
5A	M09462-66-R76	EA	TRIM - RAIL - .5” X 2.4” X 96” - WASHED MAPLE
5A	M09462-66-RE0	EA	TRIM - RAIL - .5” X 2.4” X 96” - HONEY CHERRY
5A	M09462-66-SA3	EA	TRIM - RAIL - .5” X 2.4” X 96” - SIERRA MAPLE
6A	M09471-79-R38	EA	MOLDING - TRIM/COVE - .8" X .8" X 95.8" - OAK/PORTS OAK - PORTSMOUTH OAK
6A	M09471-79-R39	EA	MOLDING - TRIM/COVE - .8" X .8" X 95.8" - CHERRY/CHERRY - CONCERT CHERRY
6A	M09471-79-R46	EA	MOLDING - TRIM/COVE - .8" X .8" X 95.8" - MAPLE/MAPLE - WASHED MAPLE
6A	M09471-79-RE0	EA	MOLDING - TRIM/COVE - .8" X .8" X 95.8" - HONEY/CHERRY- HONEY CHERRY
6A	M09471-79-SA3	EA	MOLDING - TRIM/COVE - .8" X .8" X 95.8" - HONEY/MAPLE - SIERRA MAPLE

COPYRIGHT © 2006 WINNEBAGO INDUSTRIES INC.

INTERIOR FINISH GROUP (CONTINUED)

MOLDINGS & TRIMS (CONTINUED)

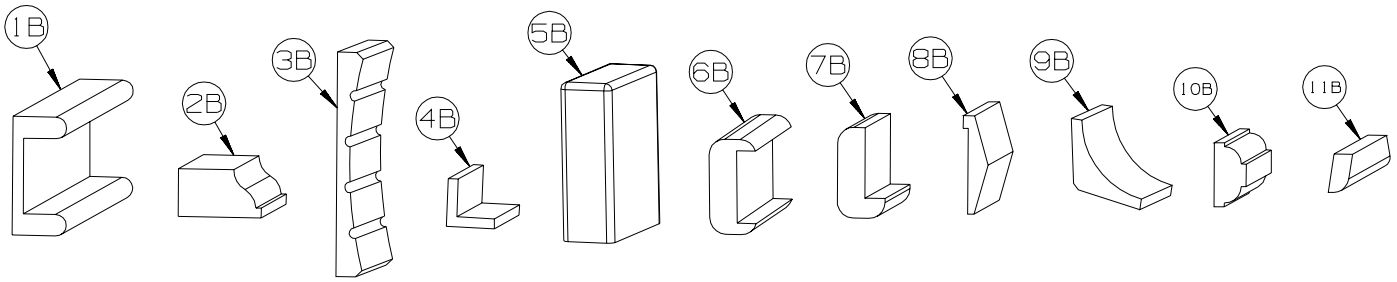

KEY	PART NUMBER	U/M	DESCRIPTION
1B	M09501-84-TG0	EA	MOLDING/TRIM - CAP/WALL - 2.2" X 85.9" - PORTSMOUTH OAK
1B	M09501-84-TG1	EA	MOLDING/TRIM - CAP/WALL - 2.2" X 85.9" - CONCERT CHERRY
1B	M09501-84-TG2	EA	MOLDING/TRIM - CAP/WALL - 2.2" X 85.9" - WASHED MAPLE
1B	M09501-84-TG3	EA	MOLDING/TRIM - CAP/WALL - 2.2" X 85.9" - HONEY CHERRY
2B	M09511-28-T77	EA	MOLDING/TRIM - .8" X 1.3" X 91.8" - PORTSMOUTH OAK
2B	M09511-28-T78	EA	MOLDING/TRIM - .8" X 1.3" X 91.8" - CONCERT CHERRY
2B	M09511-28-T79	EA	MOLDING/TRIM - .8" X 1.3" X 91.8" - WASHED MAPLE
2B	M09511-28-T80	EA	MOLDING/TRIM - .8" X 1.3" X 91.8" - SIERRA MAPLE
3B	M09511-73-TE4	EA	MOLDING/TRIM - FLUTED - 4.1" X 92.5" - PORTSMOUTH OAK
3B	M09511-73-TE5	EA	MOLDING/TRIM - FLUTED - 4.1" X 92.5" - CONCERT CHERRY
3B	M09511-73-TE6	EA	MOLDING/TRIM - FLUTED - 4.1" X 92.5" - WASHED MAPLE
3B	M09511-73-TE7	EA	MOLDING/TRIM - FLUTED - 4.1" X 92.5" - SIERRA MAPLE
4B	M09511-81-TA0	EA	MOLDING/TRIM - FLUTED - 4.1" X 92.5" - PORTSMOUTH OAK
4B	M09511-81-TA1	EA	MOLDING/TRIM - FLUTED - 4.1" X 92.5" - CONCERT CHERRY
4B	M09511-81-TA2	EA	MOLDING/TRIM - FLUTED - 4.1" X 92.5" - WASHED MAPLE
4B	M09511-81-TA3	EA	MOLDING/TRIM - FLUTED - 4.1" X 92.5" - SIERRA MAPLE
5B	M09515-81-T01	EA	MOLDING/HARDWOOD STRAIGHT - 74.3” - WASHED MAPLE
5B	M09515-81-T02	EA	MOLDING/HARDWOOD STRAIGHT - 74.3” - HONEY CHERRY
6B	M09511-42-T77	EA	MOLDING - TRIM - W/NOTCH - 1.5" X 86.4" - PORTSMOUTH OAK
6B	M09511-42-T78	EA	MOLDING - TRIM - W/NOTCH - 1.5" X 86.4" - CONCERT CHERRY
6B	M09511-42-T79	EA	MOLDING - TRIM - W/NOTCH - 1.5" X 86.4" - WASHED MAPLE
6B	M09511-42-T80	EA	MOLDING - TRIM - W/NOTCH - 1.5" X 86.4" - SIERRA MAPLE
7B	M09515-18-T77	EA	MOLDING - HARDWOOD-W/NOTCH - 1.4"X 86.2" - PORTSMOUTH OAK
7B	M09515-18-T78	EA	MOLDING - HARDWOOD-W/NOTCH - 1.4"X 86.2" - CONCERT CHERRY
7B	M09515-18-T79	EA	MOLDING - HARDWOOD-W/NOTCH - 1.4"X 86.2" - WASHED MAPLE
7B	M09515-18-T80	EA	MOLDING - HARDWOOD-W/NOTCH - 1.4"X 86.2" - SIERRA MAPLE
8B	M09515-52-TG0	EA	MOLDING - TRIM/VEE - 1.5" X 73.9" - PORTSMOUTH OAK
8B	M09515-52-TG1	EA	MOLDING - TRIM/VEE - 1.5" X 73.9" - CONCERT CHERRY
8B	M09515-52-TG2	EA	MOLDING - TRIM/VEE - 1.5" X 73.9" - WASHED MAPLE
8B	M09515-52-TG3	EA	MOLDING - TRIM/VEE - 1.5" X 73.9" - HONEY CHERRY
9B	Y00074-72-438	EA	MOLDING/CROWN - VINYL WRAPPED - PORTSMOUTH OAK - 96" - PORTSMOUTH OAK
9B	Y00074-62-438	EA	MOLDING/CROWN - VINYL WRAPPED - CONCERT CHERRY - 96" - CONCERT CHERRY
9B	Y00074-A2-438	EA	MOLDING/CROWN - VINYL WRAPPED - MAPLE - 96" - WASHED MAPLE
9B	Y00074-92-438	EA	MOLDING/CROWN - VINYL WRAPPED - SIERRA MAPLE - 96" - SIERRA MAPLE
10B	Y00076-42-438	EA	MOLDING/TRIM - .5" X 1" X 96" - OAK (UNSTAINED)
10B	Y00076-32-438	EA	MOLDING/TRIM - .5" X 1" X 96" - CHERRY (UNSTAINED)
10B	Y00076-22-438	EA	MOLDING/TRIM - .5" X 1" X 96" - MAPLE (UNSTAINED)

COPYRIGHT © 2006 WINNEBAGO INDUSTRIES INC.

INTERIOR FINISH GROUP (CONTINUED)

MOLDINGS & TRIMS (CONTINUED)

KEY	PART NUMBER	U/M	DESCRIPTION
11B	Y00086-72-438	EA	MOLDING - VINYL WRAP - .7" X 1.6" X 96" - PORTSMOUTH OAK - PORTSMOUTH OAK
11B	Y00086-62-438	EA	MOLDING - VINYL WRAP - .7" X 1.6" X 96" - CHERRY - CONCERT CHERRY
11B	Y00086-A2-438	EA	MOLDING - VINYL WRAP - .7" X 1.6" X 96" - WASHED MAPLE
11B	Y00086-82-438	EA	MOLDING - VINYL WRAP - .7" X 1.6" X 96" - HONEY CHERRY - HONEY CHERRY
11B	Y00086-92-438	EA	MOLDING - VINYL WRAP - .7" X 1.6" X 96" - SIERRA MAPLE - SIERRA MAPLE
11B	Y00087-72-438	EA	MOLDING - VINYL WRAP - .7" X 2.9" X 96" - PORTSMOUTH OAK
11B	Y00087-62-438	EA	MOLDING - VINYL WRAP - .7" X 2.9" X 96" - CONCERT CHERRY
11B	Y00087-A2-438	EA	MOLDING - VINYL WRAP - .7" X 2.9" X 96" - WASHED MAPLE
11B	Y00087-82-438	EA	MOLDING - VINYL WRAP - .7" X 2.9" X 96" - HONEY CHERRY
11B	Y00087-92-438	EA	MOLDING - VINYL WRAP - .7" X 2.9" X 96" - SIERRA MAPLE
11B	Y00267-72-438	EA	MOLDING - VINYL WRAP/MITERED - .6" X 96" - PORTSMOUTH OAK
11B	Y00267-62-438	EA	MOLDING - VINYL WRAP/MITERED - .6" X 96" - CONCERT CHERRY
11B	Y00267-A2-438	EA	MOLDING - VINYL WRAP/MITERED - .6" X 96" - WASHED MAPLE
11B	Y00267-92-438	EA	MOLDING - VINYL WRAP/MITERED - .6" X 96" - SIERRA MAPLE
11B	Y00300-72-438	EA	MOLDING - VINYL WRAP - .3" X .6" X 96" - PORTSMOUTH OAK
11B	Y00300-62-438	EA	MOLDING - VINYL WRAP - .3" X .6" X 96" - CONCERT CHERRY
11B	Y00300-A2-438	EA	MOLDING - VINYL WRAP - .3" X .6" X 96" - WASHED MAPLE
11B	Y00300-92-438	EA	MOLDING - VINYL WRAP - .3" X .6" X 96" - SIERRA MAPLE

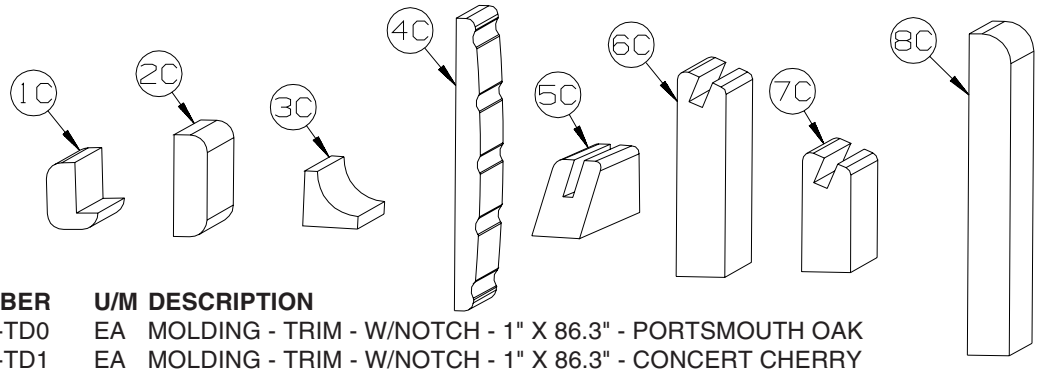

KEY	PART NUMBER	U/M	DESCRIPTION
1C	M09520-19-TD0	EA	MOLDING - TRIM - W/NOTCH - 1" X 86.3" - PORTSMOUTH OAK
1C	M09520-19-TD1	EA	MOLDING - TRIM - W/NOTCH - 1" X 86.3" - CONCERT CHERRY
1C	M09520-19-TD2	EA	MOLDING - TRIM - W/NOTCH - 1" X 86.3" - WASHED MAPLE
1C	M09520-19-TD3	EA	MOLDING - TRIM - W/NOTCH - 1" X 86.3" - HONEY CHERRY
1C	M09525-27-UF1	EA	MOLDING - HARDWOOD - .75" X 1.4" X 32.4" - CONCERT CHERRY
1C	M09525-27-UF2	EA	MOLDING - HARDWOOD - .75" X 1.4" X 32.4" - WASHED MAPLE
1C	M09525-27-UF3	EA	MOLDING - HARDWOOD - .75" X 1.4" X 32.4" - SIERRA MAPLE
2C	M09511-46-T77	EA	MOLDING/TRIM - .5" X 1.5" X 86.5" - PORTSMOUTH OAK
2C	M09511-46-T78	EA	MOLDING/TRIM - .5" X 1.5" X 86.5" - CONCERT CHERRY
2C	M09511-46-T79	EA	MOLDING/TRIM - .5" X 1.5" X 86.5" - WASHED MAPLE
2C	M09511-46-T80	EA	MOLDING/TRIM - .5" X 1.5" X 86.5" - SIERRA MAPLE
3C	M09471-79-R38	EA	MOLDING - TRIM/COVE - .8" X .8" X 96" - PORTSMOUTH OAK
3C	M09471-79-R39	EA	MOLDING - TRIM/COVE - .8" X .8" X 96" - CONCERT CHERRY
3C	M09471-79-R46	EA	MOLDING - TRIM/COVE - .8" X .8" X 96" - WASHED MAPLE
3C	M09471-79-RE0	EA	MOLDING - TRIM/COVE - .8" X .8" X 96" - HONEY CHERRY
3C	M09471-79-SA3	EA	MOLDING - TRIM/COVE - .8" X .8" X 96" - SIERRA MAPLE
4C	M09511-38-T89	EA	MOLDING - TRIM/FLUTED - 5" X 91.8" - PORTSMOUTH OAK
4C	M09511-38-T90	EA	MOLDING - TRIM/FLUTED - 5" X 91.8" - CONCERT CHERRY
4C	M09511-38-T91	EA	MOLDING - TRIM/FLUTED - 5" X 91.8" - WASHED MAPLE
4C	M09511-38-T92	EA	MOLDING - TRIM/FLUTED - 5" X 91.8" - SIERRA MAPLE
5C	Y00223-42-438	EA	MOLDING - HARDWOOD/OAK - .7" X 1" X 96"
5C	Y00223-32-438	EA	MOLDING - HARDWOOD/CHERRY - .7" X 1" X 96"
5C	Y00223-22-438	EA	MOLDING - HARDWOOD/MAPLE - .7" X 1" X 96"
6C	Y00258-72-438	EA	MOLDING/VINYL WRAP-BEVELED-.73" X 3.1" X 96" - PORTSMOUTH OAK
6C	Y00258-62-438	EA	MOLDING/VINYL WRAP-BEVELED-.73" X 3.1" X 96" - CONCERT CHERRY
6C	Y00258-A2-438	EA	MOLDING/VINYL WRAP-BEVELED ENDS-.73"X3.1"X96" - WASHED MAPLE
6C	Y00258-92-438	EA	MOLDING/VINYL WRAP-BEVELED-.73" X 3.1" X 96" - SIERRA MAPLE
7C	Y00259-72-438	EA	MOLDING/VINYL WRAP-BEVELED-.73" X 1.8" X 96" - PORTSMOUTH OAK
7C	Y00259-62-438	EA	MOLDING/VINYL WRAP-BEVELED-.73" X 1.8" X 96" - CONCERT CHERRY
7C	Y00259-A2-438	EA	MOLDING/VINYL WRAP-BEVELED-.73"X1.8"X96" - WASHED MAPLE
7C	Y00259-92-438	EA	MOLDING/VINYL WRAP-BEVELED-.73"X1.8"X96" - SIERRA MAPLE
8C	Y00331-72-438	EA	MOLDING/TRIM - VINYL - .7" X 5.5" X 96" - PORTSMOUTH OAK
8C	Y00331-62-438	EA	MOLDING/TRIM - VINYL - .7" X 5.5" X 96" - CONCERT CHERRY
8C	Y00331-A2-438	EA	MOLDING/TRIM - VINYL - .7" X 5.5" X 96" - WASHED MAPLE
8C	Y00331-92-438	EA	MOLDING/TRIM - VINYL - .7" X 5.5" X 96" - SIERRA MAPLE

COPYRIGHT © 2006 WINNEBAGO INDUSTRIES INC.

INTERIOR FINISH GROUP (CONTINUED)

MOLDINGS & TRIMS (CONTINUED)

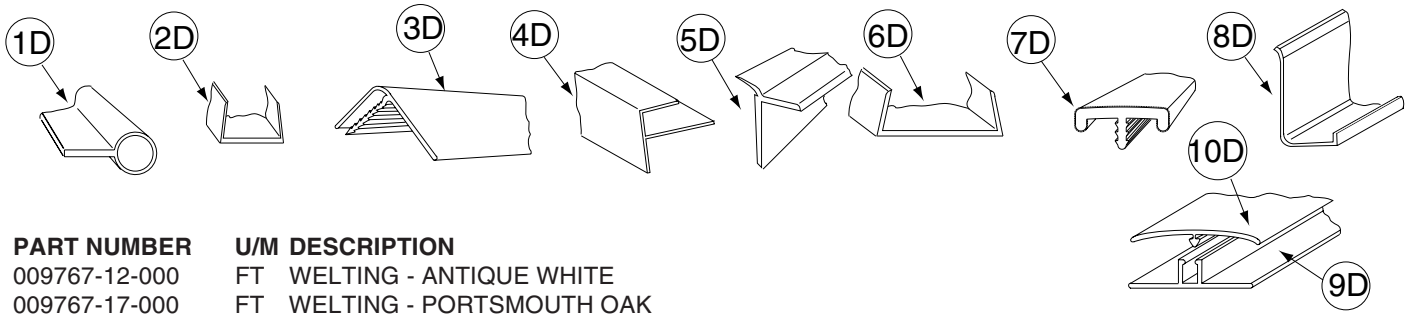

KEY	PART NUMBER	U/M	DESCRIPTION
1D	009767-12-000	FT	WELTING - ANTIQUE WHITE
1D	009767-17-000	FT	WELTING - PORTSMOUTH OAK
2D	009778-25-000	FT	U-CHANNEL - 1" - BEIGE ILLUSION
2D	009778-38-000	FT	U-CHANNEL - 1" - BONE
2D	009778-32-000	FT	U-CHANNEL - 1" - PORTSMOUTH OAK
2D	009778-34-000	FT	U-CHANNEL - 1" - CONCERT CHERRY
2D	009778-27-000	FT	U-CHANNEL - 1" - WASHED MAPLE
2D	009778-35-000	FT	U-CHANNEL - 1" - HONEY CHERRY
2D	009778-36-000	FT	U-CHANNEL - 1" - SIERRA MAPLE
3D	009809-30-000	EA	MOLDING - CORNER - OUTSIDE - 1" X 84" - BEIGE ILLUSION
3D	009809-37-000	EA	MOLDING - CORNER - OUTSIDE - 1" X 84" - BONE
3D	009809-32-000	EA	MOLDING - CORNER - OUTSIDE - 1" X 84" - PORTSMOUTH OAK
3D	009809-33-000	EA	MOLDING - CORNER - OUTSIDE - 1" X 84" - CONCERT CHERRY
3D	009809-31-000	EA	MOLDING - CORNER - OUTSIDE - 1" X 84" - WASHED MAPLE
3D	009809-34-000	EA	MOLDING - CORNER - OUTSIDE - 1" X 84" - HONEY CHERRY
3D	009809-35-000	EA	MOLDING - CORNER - OUTSIDE - 1" X 84" - SIERRA MAPLE
4D	009812-31-000	EA	MOLDING - CORNER - 1/2" W/1/4"CHAN X 84" - BEIGE ILLUSION
4D	009812-40-000	EA	MOLDING - CORNER - 1/2" W/1/4"CHAN X 84" - BONE
4D	009812-35-000	EA	MOLDING - CORNER - 1/2" W/1/4"CHAN X 84" - PORTSMOUTH OAK
4D	009812-36-000	EA	MOLDING - CORNER - 1/2" W/1/4"CHAN X 84" - CONCERT CHERRY
4D	009812-33-000	EA	MOLDING - CORNER - 1/2" W/1/4"CHAN X 84" - WASHED MAPLE
4D	009812-37-000	EA	MOLDING - CORNER - 1/2" W/1/4"CHAN X 84" - HONEY CHERRY
4D	009812-38-000	EA	MOLDING - CORNER - 1/2" W/1/4"CHAN X 84" - SIERRA MAPLE
5D	022992-11-000	FT	MOLDING - REVERSE COVE - T-SHAPED - IVORY
5D	022992-18-000	FT	MOLDING - REVERSE COVE - T-SHAPED - BONE
5D	022992-14-000	FT	MOLDING - REVERSE COVE - T-SHAPED - BRIGHT WHITE
6D	070504-42-000	FT	U-CHANNEL - PLASTIC - .13" X 84" - BEIGE ILLUSION
6D	070504-69-000	FT	U-CHANNEL - PLASTIC - .13" X 84" - BONE
6D	070504-43-000	FT	U-CHANNEL - PLASTIC - .9" X 96" - BEIGE ILLUSION
6D	070504-70-000	FT	U-CHANNEL - PLASTIC - .8" X 84" - BONE
6D	070504-57-000	FT	U-CHANNEL - PLASTIC - .13" X 84" - PORTSMOUTH OAK
6D	070504-58-000	FT	U-CHANNEL - PLASTIC - .9" X 84" - PORTSMOUTH OAK
6D	070504-60-000	FT	U-CHANNEL - PLASTIC - .13" X 84" - CONCERT CHERRY
6D	070504-61-000	FT	U-CHANNEL - PLASTIC - .9" X 84" - CONCERT CHERRY
6D	070504-50-000	FT	U-CHANNEL - PLASTIC - .13" X 96" - WASHED MAPLE
6D	070504-51-000	FT	U-CHANNEL - PLASTIC - .9" X 96" - WASHED MAPLE
6D	070504-62-000	FT	U-CHANNEL - PLASTIC - 1.65" X 84" - HONEY CHERRY
6D	070504-63-000	FT	U-CHANNEL - PLASTIC - .9" X 84" - HONEY CHERRY
6D	070504-65-000	FT	U-CHANNEL - PLASTIC - 1.65" X 84" - SIERRA MAPLE
6D	070504-66-000	FT	U-CHANNEL - PLASTIC - .9" X 84" - SIERRA MAPLE
7D	083620-15-000	FT	MOLDING-T - W/EDGE LIP - 7/8" FACE - BEIGE ILLUSION
7D	083620-25-000	FT	MOLDING-T - W/EDGE LIP - 7/8" FACE - BONE
7D	083620-20-000	FT	MOLDING-T - W/EDGE LIP - 7/8" FACE - PORTSMOUTH OAK
7D	083620-21-000	FT	MOLDING-T - W/EDGE LIP - 7/8" FACE - CONCERT CHERRY/HONEY CHERRY
7D	083620-19-000	FT	MOLDING-T - W/EDGE LIP - 7/8" FACE - WASHED MAPLE
7D	083620-22-000	FT	MOLDING-T - W/EDGE LIP - 7/8" FACE - SIERRA MAPLE
8D	085746-04-000	FT	TRIM-J - CARPET 1.2" X .5" ANGLE - 12' LONG - OFF WHITE
9D	086229-01-000	EA	RETAINER - BATTEN - .75" X 92.1" - ANY COLOR
10D	086229-20-000	EA	BATTEN - 1" X 96" - BEIGE

COPYRIGHT © 2006 WINNEBAGO INDUSTRIES INC.

INTERIOR FINISH GROUP (CONTINUED)

MOLDINGS & TRIMS (CONTINUED)

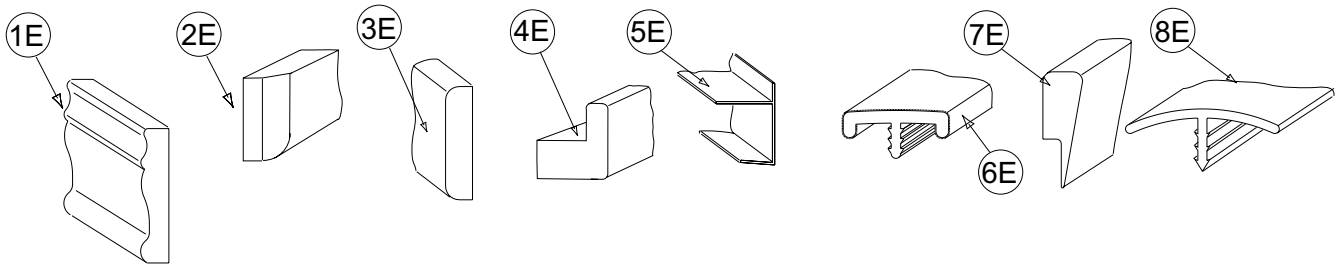

KEY	PART NUMBER	U/M	DESCRIPTION
1E	100182-10-N47	EA	TRIM/WOOD - CHAIR RAIL - 2.5" X 8' - PORTSMOUTH OAK
1E	100182-10-P85	EA	TRIM/WOOD - CHAIR RAIL - 2.5" X 8' - CONCERT CHERRY
1E	100182-10-J70	EA	TRIM/WOOD - CHAIR RAIL - 2.5" X 8' - WASHED MAPLE
1E	100182-10-RA3	EA	TRIM/WOOD - CHAIR RAIL - 2.5" X 8' - HONEY CHERRY
1E	100182-10-S67	EA	TRIM/WOOD - CHAIR RAIL - 2.5" X 8' - SIERRA MAPLE
2E	100659-30-N75	EA	MOLDING - TRIM - 8' - PORTSMOUTH OAK
2E	100659-30-N74	EA	MOLDING - TRIM - 8' - CONCERT CHERRY
2E	100659-30-M84	EA	MOLDING - TRIM - 8' - WASHED MAPLE
2E	100659-27-RA3	EA	MOLDING - TRIM - HONEY CHERRY
2E	100659-31-SA3	EA	MOLDING - TRIM - SIERRA MAPLE
3E	100818-01-12A	EA	MOLDING - VINYL WRAPPED - 1.6" X .4" X 84" - PORTSMOUTH OAK
3E	100818-01-13A	EA	MOLDING - VINYL WRAPPED - 1.6" X .4" X 84" - CONCERT CHERRY
3E	100818-01-21A	EA	MOLDING - VINYL WRAPPED - 1.6" X .4" X 84" - WASHED MAPLE
3E	100818-01-14A	EA	MOLDING - VINYL WRAPPED - 1.6" X .4" X 84" - HONEY CHERRY
3E	100818-01-22A	EA	MOLDING - VINYL WRAPPED - 1.6" X .4" X 84" - SIERRA MAPLE
4E	100819-01-12A	EA	MOLDING - VINYL WRAPPED-L-SHAPED-1.5"X1.5"X84" - PORTSMOUTH OAK
4E	100819-01-13A	EA	MOLDING - VINYL WRAPPED-L-SHAPED-1.5"X1.5"X84" - CONCERT CHERRY
4E	100819-01-21A	EA	MOLDING - VINYL WRAPPED-L-SHAPED-1.5"X1.5"X84" - WASHED MAPLE
4E	100819-01-14A	EA	MOLDING - VINYL WRAPPED-L-SHAPED-1.5"X1.5"X84" - HONEY CHERRY
4E	100819-01-22A	EA	MOLDING - VINYL WRAPPED-L-SHAPED-1.5"X1.5"X84" - SIERRA MAPLE
5E	103186-01-07A	FT	MOLDING/PLASTIC - 3/8" U-CHANNEL-3/4" FACE -BEIGE ILLUSION
5E	103186-01-09A	FT	MOLDING/PLASTIC - 3/8" U-CHAN'L-3/4" FACE - PORTSMOUTH OAK
5E	103186-01-10A	FT	MOLDING/PLASTIC - 3/8" U-CHAN'L-3/4" FACE - CONCERT CHERRY
5E	103186-01-08A	FT	MOLDING/PLASTIC - 3/8" U-CHANNEL-3/4"FACE-WASHED MAPLE 8' - WASHED MAPLE
5E	103186-01-11A	FT	MOLDING/PLASTIC - 3/8" U-CHAN'L-3/4" FACE - HONEY CHERRY
5E	103186-01-12A	FT	MOLDING/PLASTIC - 3/8" U-CHAN'L-3/4" FACE - SIERRA MAPLE
5E	103186-02-07A	FT	MOLDING/PLASTIC-1" U-CHAN'L-1 3/8" FACE - BEIGE ILLUSION
5E	103186-02-09A	FT	MOLDING/PLASTIC - 1" U-CHAN'L-1 3/8" FACE - PORTSMOUTH OAK
5E	103186-02-10A	FT	MOLDING/PLASTIC - 1" U-CHAN'L-1 3/8" FACE - CONCERT CHERRY
5E	103186-02-08A	FT	MOLDING/PLASTIC - 1" U-CHANNEL-1 3/8"FACE - WASHED MAPLE
5E	103186-02-11A	FT	MOLDING/PLASTIC - 1" U-CHAN'L-1 3/8" FACE - HONEY CHERRY
5E	103186-02-12A	FT	MOLDING/PLASTIC - 1" U-CHAN'L-1 3/8" FACE - SIERRA MAPLE
6E	104676-02-08A	FT	MOLDING-T - W/EDGE LIP - 11/16" FACE - PORTSMOUTH OAK
6E	104676-02-09A	FT	MOLDING-T - W/EDGE LIP - 11/16" FACE - CONCERT CHERRY
6E	104676-02-06A	FT	MOLDING-T - W/EDGE LIP - 11/16" FACE - WASHED MAPLE
6E	104676-02-10A	FT	MOLDING-T - W/EDGE LIP - 11/16" FACE - HONEY CHERRY
6E	104676-02-12A	FT	MOLDING-T - W/EDGE LIP - 11/16" FACE - SIERRA MAPLE
6E	105004-01-12A	EA	MOLDING - VINYL WRAPPED - 1" X 96" - PORTSMOUTH OAK
6E	105004-01-13A	EA	MOLDING - VINYL WRAPPED 1" X 8' - CONCERT CHERRY
6E	105004-01-21A	EA	MOLDING - VINYL WRAPPED - 1" X 8' - WASHED MAPLE
6E	105004-01-22A	EA	MOLDING - VINYL WRAPPED - 1" X 8' - SIERRA MAPLE
8E	105709-02-000	FT	MOLDING-T - W/EDGE LIP 3/4" FACE - BEIGE ILLUSION

COPYRIGHT © 2006 WINNEBAGO INDUSTRIES INC.

INTERIOR FINISH GROUP (CONTINUED)

MOLDINGS & TRIMS (CONTINUED)

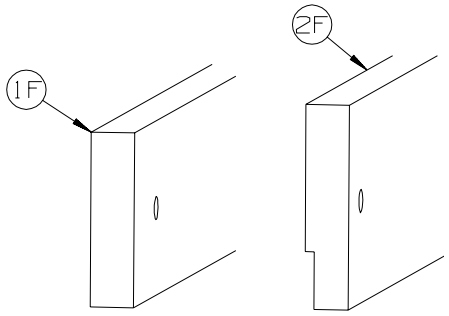

KEY	PART NUMBER	U/M	DESCRIPTION
1F	116951-45-R68	EA	MOLDING - TRIM - 3" X 30.3" - PORTSMOUTH OAK
1F	116951-45-R69	EA	MOLDING - TRIM - 3" X 30.3" - CONCERT CHERRY
1F	116951-45-R76	EA	MOLDING - TRIM - 3" X 30.3" - WASHED MAPLE
1F	116951-45-SA3	EA	MOLDING - TRIM - 3" X 30.3" - SIERRA MAPLE
2F	116951-37-R68	EA	MOLDING - TRIM - 3.5" X 38.6" - PORTSMOUTH OAK
2F	116951-37-R69	EA	MOLDING - TRIM - 3.5" X 38.6" - CONCERT CHERRY
2F	116951-37-R76	EA	MOLDING - TRIM - 3.5" X 38.6" - WASHED MAPLE
2F	116951-37-SA3	EA	MOLDING - TRIM - 3.5" X 38.6" - SIERRA MAPLE
2F	116951-51-SA0	EA	MOLDING - TRIM - 3.5" X 47.3" - PORTSMOUTH OAK
2F	116951-51-SA1	EA	MOLDING - TRIM - 3.5" X 47.3" - CONCERT CHERRY
2F	116951-51-SA2	EA	MOLDING - TRIM - 3.5" X 47.3" - WASHED MAPLE
2F	116951-51-SA3	EA	MOLDING - TRIM - 3.5" X 47.3" - SIERRA MAPLE
2F	116951-55-TD0	EA	MOLDING - TRIM - 4.5" X 52.3" - PORTSMOUTH OAK
2F	116951-55-TD1	EA	MOLDING - TRIM - 4.5" X 52.3" - CONCERT CHERRY
2F	116951-55-TD2	EA	MOLDING - TRIM - 4.5" X 52.3" - WASHED MAPLE
2F	116951-55-TD3	EA	MOLDING - TRIM - 4.5" X 52.3" - SIERRA MAPLE
2F	116951-56-TD0	EA	MOLDING - TRIM - 4.5" X 52.3" - PORTSMOUTH OAK
2F	116951-56-TD1	EA	MOLDING - TRIM - 4.5" X 52.3" - CONCERT CHERRY
2F	116951-56-TD2	EA	MOLDING - TRIM - 4.5" X 52.3" - WASHED MAPLE
2F	116951-56-TD3	EA	MOLDING - TRIM - 4.5" X 52.3" - SIERRA MAPLE

COPYRIGHT © 2006 WINNEBAGO INDUSTRIES INC.

INTERIOR FINISH GROUP (CONTINUED)

MOLDINGS & TRIMS (CONTINUED)

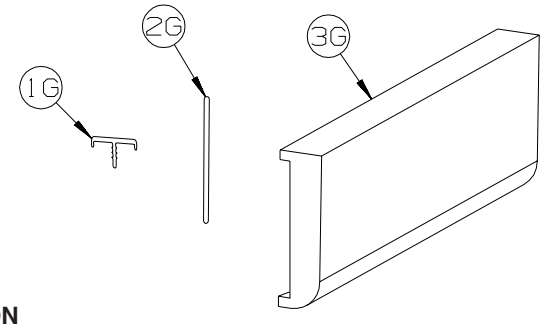

KEY	PART NUMBER	U/M	DESCRIPTION
1G	119520-01-01A	FT	MOLDING-T - OFFSET W/EDGE LIP - 1.3" FACE - OFF WHITE
1G	119520-01-04A	FT	MOLDING-T - OFFSET W/EDGE LIP - 1.3" FACE - PORTSMOUTH OAK
1G	119520-01-02A	FT	MOLDING-T - OFFSET W/EDGE LIP - 1.3" FACE - CONCERT CHERRY
1G	119520-01-03A	FT	MOLDING-T - OFFSET W/EDGE LIP - 1.3" FACE - WASHED MAPLE
1G	119520-01-05A	FT	MOLDING-T - OFFSET W/EDGE LIP - 1.3" FACE - SIERRA MAPLE
1G	119520-03-03A	FT	MOLDING-T - OFFSET W/EDGE LIP - 1" FACE - WASHED MAPLE
1G	119520-03-06A	FT	MOLDING-T - OFFSET W/EDGE LIP - 1" FACE - HONEY CHERRY
2G	127842-01-01A	FT	SEAL - SIGHT SHIELD - 2" BLACK
	137885-A2-438	EA	LUMBER - VINYL WRAPPED - .7" X .75" X 96" - CONCERT CHERRY
	137885-D2-438	EA	LUMBER - VINYL WRAPPED - .7" X 1.5" X 96" - CONCERT CHERRY
	137885-E2-438	EA	LUMBER - VINYL WRAPPED - .7" X 2" X 96" - CONCERT CHERRY
	137885-F2-438	EA	LUMBER - VINYL WRAPPED - .7" X 2.5" X 96" - CONCERT CHERRY
	137885-G2-438	EA	LUMBER - VINYL WRAPPED - .7" X 3" X 96" - CONCERT CHERRY
	137885-H2-438	EA	LUMBER - VINYL WRAPPED - .7" X 3.5" X 96" - CONCERT CHERRY
	137885-J2-438	EA	LUMBER - VINYL WRAPPED - .7" X 5.5" X 96" - CONCERT CHERRY
	137885-J2-743	EA	LUMBER - VINYL WRAPPED - .7" X 5.5" X 108" - CONCERT CHERRY
	137885-K2-438	EA	LUMBER - VINYL WRAPPED - .7" X 3.9" X 96" - CONCERT CHERRY
	137885-R2-438	EA	LUMBER - VINYL WRAPPED - .7" X 3" X 96" - CONCERT CHERRY
3G	137887-D2-134	EA	MOLDING - VINYL WRAPPED - .7" X 1.6" X 84" - CONCERT CHERRY
3G	137887-D2-743	EA	MOLDING - VINYL WRAPPED - .7" X 1.6" X 108" - CONCERT CHERRY
3G	137887-F2-134	EA	MOLDING - VINYL WRAPPED - .7" X 2.5" X 84" - CONCERT CHERRY
3G	137887-F2-743	EA	MOLDING - VINYL WRAPPED - .7" X 2.5" X 108" - CONCERT CHERRY
3G	137887-F2-438	EA	MOLDING - VINYL WRAPPED - .7" X 2.5" X 96" - CONCERT CHERRY
	137894-A2-438	EA	LUMBER - VINYL WRAPPED - .7" X .75" X 96" - PORTSMOUTH OAK
	137894-D2-438	EA	LUMBER - VINYL WRAPPED - .7" X 1.5" X 96" - PORTSMOUTH OAK
	137894-E2-438	EA	LUMBER - VINYL WRAPPED - .7" X 2" X 96" - PORTSMOUTH OAK
	137894-F2-438	EA	LUMBER - VINYL WRAPPED - .7" X 2.5" X 96" - PORTSMOUTH OAK
	137894-G2-438	EA	LUMBER - VINYL WRAPPED - .7" X 3" X 96" - PORTSMOUTH OAK
	137894-H2-438	EA	LUMBER - VINYL WRAPPED - .7" X 3.5" X 96" - PORTSMOUTH OAK
	137894-J2-438	EA	LUMBER - VINYL WRAPPED - .7" X 5.5" X 96" - PORTSMOUTH OAK
	137894-J2-743	EA	LUMBER - VINYL WRAPPED - .7" X 5.5" X 96" - PORTSMOUTH OAK
	137894-K2-438	EA	LUMBER - VINYL WRAPPED - .7" X 3.9" X 96" - PORTSMOUTH OAK
	137894-R2-438	EA	LUMBER - VINYL WRAPPED - .7" X 3" X 96" - PORTSMOUTH OAK
3G	137895-D2-134	EA	MOLDING - VINYL WRAPPED - .7" X 1.6" X 84"-PORTSMOUTH OAK
3G	137895-D2-743	EA	MOLDING - VINYL WRAPPED - .7" X 1.6" X 108"-PORTSMOUTH OAK
3G	137895-F2-438	EA	MOLDING - VINYL WRAPPED - .7" X 2.5" X 96" - PORTSMOUTH OAK
3G	137895-F2-743	EA	MOLDING - VINYL WRAPPED - .7" X 2.5" X 108" - PORTSMOUTH OAK
	146419-A2-438	EA	LUMBER - VINYL WRAPPED - .7" X .75" X 96" - HONEY CHERRY
	146419-D2-438	EA	LUMBER - VINYL WRAPPED - .7" X 1.5" X 96" - HONEY CHERRY
	146419-E2-438	EA	LUMBER - VINYL WRAPPED - .7" X 2" X 96" - HONEY CHERRY
	146419-F2-438	EA	LUMBER - VINYL WRAPPED - .7" X 2.5" X 96" - HONEY CHERRY
	146419-G2-438	EA	LUMBER - VINYL WRAPPED - .7" X 3" X 96" - HONEY CHERRY
	146419-H2-438	EA	LUMBER - VINYL WRAPPED - .7" X 3.5" X 96" - HONEY CHERRY
	146419-J2-438	EA	LUMBER - VINYL WRAPPED - .7" X 5.5" X 96" - HONEY CHERRY
	146419-J2-743	EA	LUMBER - VINYL WRAPPED - .7" X 5.5" X 108" - HONEY CHERRY
	146419-K2-438	EA	LUMBER - VINYL WRAPPED - .7" X 3.9" X 96" - HONEY CHERRY
	146419-R2-438	EA	LUMBER - VINYL WRAPPED - .7" X 3" X 96" - HONEY CHERRY
3G	146425-D2-134	EA	MOLDING - VINYL WRAPPED - .7" X 1.6" X 83.9" - HONEY CHERRY
3G	146425-F2-438	EA	MOLDING - VINYL WRAPPED - .7" X 2.6" X 96" - HONEY CHERRY

COPYRIGHT © 2006 WINNEBAGO INDUSTRIES INC.

INTERIOR FINISH GROUP (CONTINUED)

MOLDINGS & TRIMS (CONTINUED)

KEY	PART NUMBER	U/M	DESCRIPTION
	149325-A2-438	EA	LUMBER - VINYL WRAPPED - .7" X .75" X 96" - WASHED MAPLE
	149325-D2-438	EA	LUMBER - VINYL WRAPPED - .7" X 1.5" X 96" - WASHED MAPLE
	149325-E2-438	EA	LUMBER - VINYL WRAPPED - .7" X 2" X 96" - WASHED MAPLE
	149325-F2-438	EA	LUMBER - VINYL WRAPPED - .7" X 2.5" X 96" - WASHED MAPLE
	149325-G2-438	EA	LUMBER - VINYL WRAPPED - .7" X 3" X 96" - WASHED MAPLE
	149325-H2-438	EA	LUMBER - VINYL WRAPPED - .7" X 3.5" X 96" - WASHED MAPLE
	149325-J2-438	EA	LUMBER - VINYL WRAPPED - .7" X 5.5" X 96" - WASHED MAPLE
	149325-J2-743	EA	LUMBER - VINYL WRAPPED - .7" X 5.5" X 108" - WASHED MAPLE
	149325-K2-438	EA	LUMBER - VINYL WRAPPED - .7" X 3.9" X 96" - WASHED MAPLE
	149325-R2-438	EA	LUMBER - VINYL WRAPPED - .7" X 3" X 96" - WASHED MAPLE
3G	149326-D2-134	EA	MOLDING - VINYL WRAPPED - .7" X 1.5" X 83.9" - WASHED MAPLE
3G	149326-D2-743	EA	MOLDING - VINYL WRAPPED - .7" X 1.5" X 108" - WASHED MAPLE
3G	149326-F2-134	EA	MOLDING - VINYL WRAPPED - .7" X 2.5" X 83.9" - WASHED MAPLE
3G	149326-F2-438	EA	MOLDING - VINYL WRAPPED - .7" X 2.5" X 96" - WASHED MAPLE
3G	149326-F2-743	EA	MOLDING - VINYL WRAPPED - .7" X 2.5" X 108" - WASHED MAPLE
	149330-A2-438	EA	LUMBER - VINYL WRAPPED - .7" X .75" X 96" - SIERRA MAPLE
	149330-D2-438	EA	LUMBER - VINYL WRAPPED - .7" X 1.5" X 96" - SIERRA MAPLE
	149330-E2-438	EA	LUMBER - VINYL WRAPPED - .7" X 2" X 96" - SIERRA MAPLE
	149330-F2-438	EA	LUMBER - VINYL WRAPPED - .7" X 2.5" X 96" - SIERRA MAPLE
	149330-G2-438	EA	LUMBER - VINYL WRAPPED - .7" X 3" X 96" - SIERRA MAPLE
	149330-H2-438	EA	LUMBER - VINYL WRAPPED - .7" X 3.5" X 96" - SIERRA MAPLE
	149330-J2-438	EA	LUMBER - VINYL WRAPPED - .7" X 5.5" X 96" - SIERRA MAPLE
	149330-J2-743	EA	LUMBER - VINYL WRAPPED - .7" X 5.5" X 108" - SIERRA MAPLE
	149330-K2-438	EA	LUMBER - VINYL WRAPPED - .7" X 3.9" X 96" - SIERRA MAPLE
	149330-R2-438	EA	LUMBER - VINYL WRAPPED - .7" X 3" X 96" - SIERRA MAPLE
3G	149331-D2-134	EA	MOLDING - VINYL WRAPPED - .7" X 1.5" X 83.9" - SIERRA MAPLE
3G	149331-D2-743	EA	MOLDING - VINYL WRAP - .7" X 1.5" X 108" - SIERRA MAPLE
3G	149331-F2-134	EA	MOLDING - VINYL WRAPPED - .7" X 2.5" X 83.9" - SIERRA MAPLE
3G	149331-F2-438	EA	MOLDING - VINYL WRAPPED - .7" X 2.5" X 96" - SIERRA MAPLE
3G	149331-F2-743	EA	MOLDING - VINYL WRAPPED - .7" X 2.5" X 108" - SIERRA MAPLE

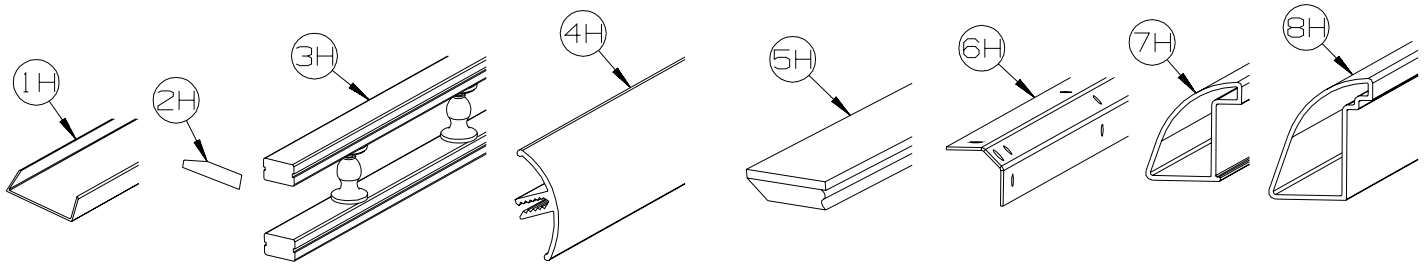

KEY	PART NUMBER	U/M	DESCRIPTION
1H	141260-01-01A	FT	U-CHANNEL - 1" - VILLAGE OAK - PORTSMOUTH OAK/WASHED MAPLE/SIERRA MAPLE
1H	141260-01-02A	FT	U-CHANNEL - 1" - GRADY BROWN - CONCERT CHERRY/HONEY CHERRY
1H	141260-02-01A	FT	U-CHANNEL - 1 1/8" - VILLAGE OAK - PORTSMOUTH OAK/WASHED MAPLE/SIERRA MAPLE
1H	141260-02-02A	FT	U-CHANNEL - 1 1/8" - GRADY BROWN - CONCERT CHERRY/HONEY CHERRY
2H	146306-01-01A	FT	TRANSITION - CARPET/TILE
3H	150167-01-07A	EA	RAIL - DECORATIVE - 96" W/O REVERSE SIDE GROOVE - PORTSMOUTH OAK
3H	150167-01-02A	EA	RAIL - DECORATIVE - 96" W/O REVERSE SIDE GROOVE - SALEM CHERRY - CONCERT CHERRY
3H	150167-01-03A	EA	RAIL - DECORATIVE - 96" W/O REVERSE SIDE GROOVE - WASHED MAPLE
3H	150167-01-09A	EA	RAIL - DECORATIVE - 96" W/O REVERSE SIDE GROOVE - SIERRA MAPLE
4H	151653-10-01A	EA	TRIM/RADIUS - CABINET CORNER - 79.6" - HAMMER TONE SILVER
4H	151653-10-02A	EA	TRIM/RADIUS - CABINET CORNER - 79.6" - DULL METALLIC
5H	151676-26-S46	EA	MOLDING/TRIM - .75" X 1.6" X 80.2" - PORTSMOUTH OAK
5H	151676-26-S47	EA	MOLDING/TRIM - .75" X 1.6" X 80.2" - CONCERT CHERRY
5H	151676-26-S48	EA	MOLDING/TRIM - .75" X 1.6" X 80.2" - WASHED MAPLE
5H	151676-26-SR0	EA	MOLDING/TRIM - .75" X 1.6" X 80.2" - SIERRA MAPLE
6H	151861-05-02B	EA	ANGLE - SUPPORT/CORNER - 1.4" X 78.6" - E-COATED
7H	151893-01-01A	EA	TRIM/RADIUS - CABINET BOTTOM - 72.6" - HAMMER TONE SILVER
7H	151893-01-02A	EA	TRIM/RADIUS - CABINET BOTTOM - 72.6" - DULL METALLIC
8H	152077-01-01A	EA	TRIM/RADIUS - CABINET BOTTOM - 27.7" - HAMMER TONE SILVER
8H	152077-01-02A	EA	TRIM/RADIUS - CABINET BOTTOM - 27.7" - DULL METALLIC

COPYRIGHT © 2006 WINNEBAGO INDUSTRIES INC.

INTERIOR FINISH GROUP (CONTINUED)

PANELING & LAMINATES

KEY	PART NUMBER	U/M	DESCRIPTION
	000885-92-000	SF	PARTICLE BOARD - 3/8" X 4' X 8' - PORTSMOUTH OAK - 1 SIDED - PORTSMOUTH OAK
	000885-93-000	SF	PARTICLE BOARD - 3/8" X 4' X 8' - PORTSMOUTH OAK - 2 SIDED - PORTSMOUTH OAK
	000885-94-000	SF	PARTICLE BOARD - 1/2" X 4' X 8' - PORTSMOUTH OAK - 2 SIDED - PORTSMOUTH OAK
	000885-95-000	SF	PARTICLE BOARD - 3/4" X 4' X 8' - PORTSMOUTH OAK - 2 SIDED - PORTSMOUTH OAK
	000885-B1-000	SF	PARTICLE BOARD - 3/8" X 4' X 8' - SIERRA MAPLE - 1 SIDED - SIERRA MAPLE
	000885-B0-000	SF	PARTICLE BOARD - 3/8" X 4' X 8'- SIERRA MAPLE - 2 SIDED - SIERRA MAPLE
	000885-B3-000	SF	PARTICLE BOARD - 1/2" X 4' X 8'- SIERRA MAPLE - 2 SIDED - SIERRA MAPLE
	000885-B2-000	SF	PARTICLE BOARD - 3/4" X 4' X 8'- SIERRA MAPLE - 2 SIDED - SIERRA MAPLE
	000885-A5-000	SF	PARTICLE BOARD - 3/8" X 4' X 8' - WHITE PEB EMB - 1 SIDED FROM: 00-00-00 THRU: 05-15-05
	000885-C3-000	SF	PARTICLE BOARD - 3/8" X 4' X 8' - WHITE THATCH EMB-1 SIDED FROM: 05-16-05 THRU: 99-99-99
	P26866-06-N70	EA	HANDLE - DOOR/TAMBOUR - 18.6" - OAK - PORTSMOUTH OAK
	P26866-06-SA3	EA	HANDLE - DOOR/TAMBOUR - 18.6" - SIERRA MAPLE
	P26866-10-M07	EA	HANDLE - DOOR/TAMBOUR - 11.6" - ASH - PORTSMOUTH OAK
	P26866-10-TK0	EA	HANDLE - DOOR/TAMBOUR - 11.6" - SIERRA MAPLE
	074497-42-000	SF	PANELING - PORTSMOUTH OAK - 1/8" X 4' X 8' - PORTSMOUTH OAK
	074497-48-000	SF	PANELING - SIERRA MAPLE - 1/8" X 4' X 8' - SIERRA MAPLE
	076773-15-000	SF	PANELING - 2 SIDED/PORTSMOUTH OAK - 1/8" X 4' X 8' - PORTSMOUTH OAK
	076773-19-000	SF	PANELING - 2 SIDED/SIERRA MAPLE - 1/8" X 4' X 8' - SIERRA MAPLE
	080215-14-000	SF	PANELING - 2 SIDED/PORTSMOUTH OAK - 3/16" X 4' X 8' - PORTSMOUTH OAK
	080215-19-000	SF	PANELING/PAPER WRAP - 2 SIDED/SIERRA MAPLE-3/16" X 4' X 8' - SIERRA MAPLE
	074497-52-000	SF	PANELING/PAPER WRAPPED - SCULPTURES PA - 1/8" X 48" X 100"
	088272-H9-000	SF	PANELING - PEBBLE EMBOSSED - WHITE - 4' X 8' FROM: 00-00-00 THRU: 05-15-05
	088272-M9-000	SF	PANELING - WHITE THATCHED - 4' X 8' FROM: 05-16-05 THRU: 99-99-99
	088272-K6-000	SF	PANELING - CYPRESS - 4' X 7' (T11, TK0)
	088272-L7-000	SF	PANELING - TAYLOR/MINK - 4' X 7.4' (T12, TK1) FROM: 00-00-00 THRU: 05-15-05
	088272-N0-000	SF	PANELING - VENICE PLASTER/MINK - 4' X 7.4' (T12, TK1) FROM: 05-16-05 THRU: 03-21-06
	088272-L0-000	SF	PANELING - D'VINCI ALMOND - 1/8" X 4' X 7' (T12, TK1) FROM: 03-22-06 THRU: 99-99-99
	088272-K7-000	SF	PANELING - STONE - 4' X 7' (T13, TK2)
	088272-M7-000	SF	PANELING - KURTA/CANVAS - 4' X 7' (TR0)
	088272-K5-000	SF	PANELING - SILVERADO- 4' X 7' (TS5)
	074498-A4-000	SF	LAMINATE - PLASTIC - HYBRID SLATE - 5' X 8' (T11, TK0)
	074498-A3-000	SF	LAMINATE - PLASTIC - BRONZE LEGACY - 5' X 8' (T12, TK1)
	074498-B3-000	SF	LAMINATE - PLASTIC - NEXUS SAND - 5' X 8' (T13, TK2, TR0)
	074498-A9-000	SF	LAMINATE - PLASTIC - KALAHARI/TOPAZ - 5' X 8' FROM: 11-14-05 THRU: 99-99-99
	074498-84-000	SF	LAMINATE - PLASTIC - WHITE TALC - 5' X 8' (TS5)
	076325-39-000	FT	MOLDING - EDGEBAND - 1 5/16" X .030" - ALMOND
	076325-40-000	FT	MOLDING - EDGEBAND - .93" X .024" - ALMOND
	076325-77-000	FT	MOLDING - EDGEBAND - 1 5/16" X .030" - PORTSMOUTH OAK
	076325-83-000	FT	MOLDING - EDGEBAND - .93" X .024" - SIERRA MAPLE
	085284-G8-000	FT	BATT TAPE - ADHESIVE BACKED/PAPER WRAP - PORTSMOUTH OAK
	085284-J4-000	FT	BATT TAPE - ADHESIVE BACKED - DECORATIVE - SIERRA MAPLE
	085284-H9-000	FT	BATT TAPE - ADHESIVE BACKED - DECORATIVE - CYPRESS (T11, TK0)
	085284-J2-000	FT	BATT TAPE - ADHESIVE BACKED - DECORATIVE - TAYLOR MINK (T12, TK1) FROM: 00-00-00 THRU: 05-15-05
	085284-L0-000	FT	BATT TAPE - ADHESIVE BACKED - DECORATIVE - MINK (T12, TK1) FROM: 05-16-05 THRU: 03-21-06
	085284-J3-000	FT	BATT TAPE - ADHESIVE BACKED - DECORATIVE - D'VINCI ALMOND (T12, TK1) FROM: 03-22-06 THRU: 99-99-99
	085284-H0-000	FT	BATT TAPE - ADHESIVE BACKED - DECORATIVE - STONE (T13, TK2)
	085284-K7-000	FT	BATT TAPE - ADHESIVE BACKED - DECORATIVE - KURTA/CANVAS (TR0)
	085284-H8-000	FT	BATT TAPE - ADHESIVE BACKED - DECORATIVE - ROCKET SILVERADO (TS5)

COPYRIGHT © 2006 WINNEBAGO INDUSTRIES INC.

INTERIOR FINISH GROUP (CONTINUED)

PANELING & LAMINATES (CONTINUED)

KEY	PART NUMBER	U/M	DESCRIPTION
	069733-87-000	EA	BATT STRIP - WOODGRAINED/PORTSMOUTH OAK - 8' - PORTSMOUTH OAK
	069733-90-000	EA	BATT STRIP - WOODGRAINED/SIERRA MAPLE - 8' - SIERRA MAPLE
	088263-J1-000	EA	BATT STRIP - DECORATIVE - SIERRA MAPLE
	088263-H5-000	EA	BATT STRIP - DECORATIVE - CYPRESS (T11, TK0)
	088263-H9-000	EA	BATT STRIP - DECORATIVE - TAYLOR MINK (T12, TK1) FROM: 00-00-00 THRU: 05-15-05
	088263-K6-000	EA	BATT STRIP - DECORATIVE - MINK - 8' (T12, TK1) FROM: 05-16-05 THRU: 03-21-06
	088263-J0-000	EA	BATT STRIP - DECORATIVE - D'VINCI ALMOND (T12, TK1) FROM: 03-22-06 THRU: 99-99-99
	088263-H6-000	EA	BATT STRIP - DECORATIVE - STONE (T13, TK2)
	088263-K3-000	EA	BATT STRIP - DECORATIVE - KURTA/CANVAS (TR0)
	088263-H4-000	EA	BATT STRIP - DECORATIVE - ROCKET SILVERADO (TS5)
	126339-01-000	SF	BOARD - WHEAT - 60" X 72"

COPYRIGHT © 2006 WINNEBAGO INDUSTRIES INC.

INTERIOR FINISH GROUP (CONTINUED)

INTERIOR TRIM LAYOUT

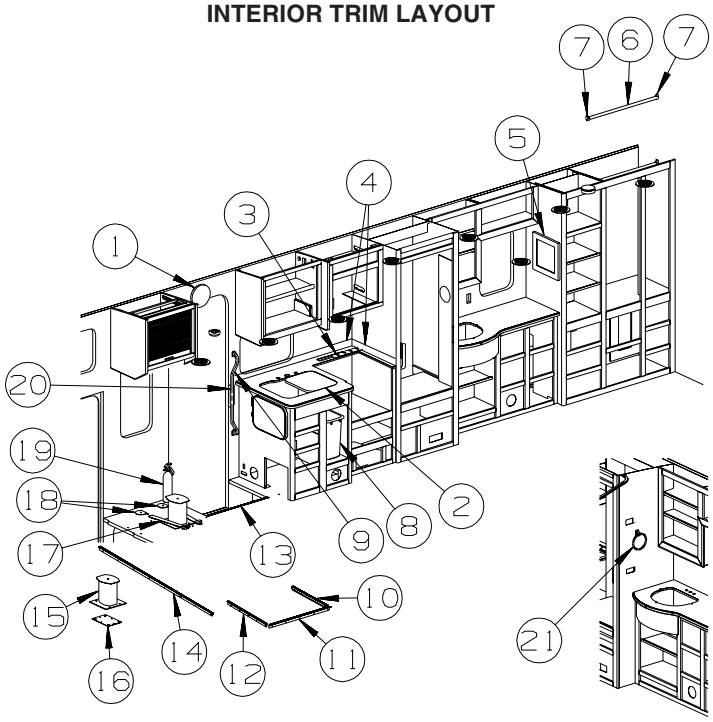

KEY	PART NUMBER	U/M	DESCRIPTION
1	142368-01-02A	EA	CLOCK - 8" ROUND - SATIN NICKEL
2	103610-04-S36	EA	COVER - SINK - 15.7" X 13.8" - HYBRID SLATE (T11, TK0)
2	103610-04-S34	EA	COVER - SINK - 15.7" X 13.8" - BRONZE LEGACY (T12, TK1)
2	103610-04-T13	EA	COVER - SINK - 15.7" X 13.8" - NEXUS SAND (T13, TK2)
3	153433-01-T53	EA	HOLDER - KNIFE - PORTSMOUTH OAK - DELUXE UPGRADE PACKAGE
3	153433-01-TL0	EA	HOLDER - KNIFE - SIERRA MAPLE - DELUXE UPGRADE PACKAGE
4	132610-05-26A	FT	WALLPAPER - BORDER - 7" - SELF-ADHESIVE (T11, TK0)
4	132610-05-32A	FT	WALLPAPER - BORDER - 7" - SELF-ADHESIVE (T12, TK1)
4	132610-05-30A	FT	WALLPAPER - BORDER - 7" - SELF-ADHESIVE (T13, TK2)
5	131493-09-03A	EA	PICTURE - DECORATIVE - 8" X 10" - ORCHID IV (T11, TK0) - DELUXE UPGRADE PACKAGE
5	131493-05-04A	EA	PICTURE - DECORATIVE - 10" X 10" - ARCHITECTURAL (T12, TK1) - DELUXE UPGRADE PACKAGE
5	131493-05-03A	EA	PICTURE - DECORATIVE - 10" X 10" - SAND DOLLAR (T13, TK2) - DELUXE UPGRADE PACKAGE
6	Y00136-21-218	EA	DOWEL - WOOD - CLOTHES ROD - 1"DIAMETER X 4'
7	152301-01-01A	EA	FLANGE - PLASTIC - 1" CLOTHES ROD HOLDER - WHITE
8	130818-02-01A	EA	TRASH CONTAINER - 20 QUART ALMOND
9	137605-01-01A	EA	HAND RAIL - INTERIOR ENTRY DOOR - BLACK FROM: 00-00-00 THRU: 03-05-06
9	137605-02-01A	EA	HAND RAIL - INTERIOR ENTRY DOOR - BLACK FROM: 03-06-06 THRU: 99-99-99
10	139955-16-01A	EA	TRIM - STEP/ENTRY - 21.7" - MILL - VINYL FLOOR THRU OUT
11	139955-17-01A	EA	TRIM - STEP/ENTRY - 28" - MILL - VINYL FLOOR THRU OUT
12	139955-15-01A	EA	TRIM - STEP/ENTRY - 21.7" - MILL - VINYL FLOOR THRU OUT
13	139955-14-04A	EA	TRIM - STEP/ENTRY - 26.7" - TITANIUM
14	139955-18-03A	EA	TRIM - STEP/ENTRY - 62.3" - TITANIUM - VINYL FLOOR THRU OUT
15	133408-01-000	EA	PEDESTAL - SEAT - DRIVER/PASSENGER - 9 3/4"
16	108445-02-000	EA	PLATE/FLOOR MOUNTED - PEDESTAL SEAT
17	007021-01-000	EA	SEAT BELT - 2" X 90" - BLACK
18	140221-01-02B	EA	WASHER - SEAT BELT - E-COAT
19	094499-03-000	EA	EXTINGUISHER/FIRE - DRY - 10BC - W/GAUGE/BRACKET
19*	094499-02-000	EA	EXTINGUISHER/FIRE - DRY - 10BC - W/GAUGE - CANADIAN
	094499-04-000	EA	STRAP - FIRE EXTINGUISHER MOUNTING - METAL
20	148362-01-01A	EA	COVER - BRACKET/STRIKE - BRIGHT WHITE
21	145980-06-03A	EA	TOWEL RING - CHROME

***COMPONENT PARTS LISTED LATER IN THIS GROUP**

COPYRIGHT © 2006 WINNEBAGO INDUSTRIES INC.

INTERIOR FINISH GROUP (CONTINUED)

INTERIOR TRIM LAYOUT (CONTINUED)

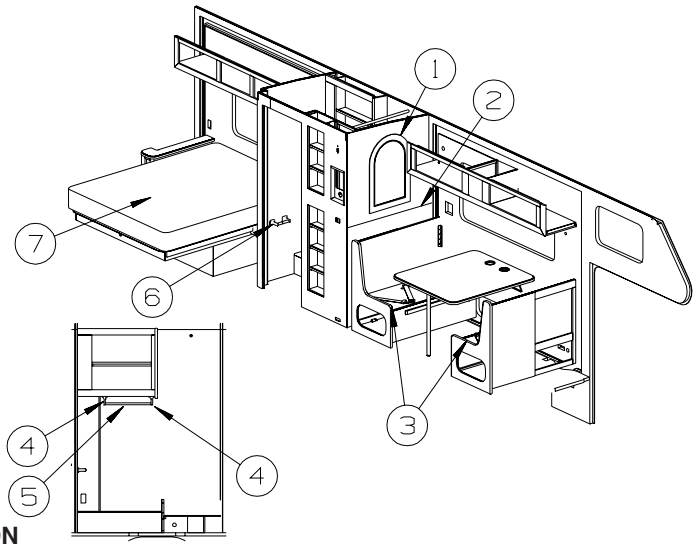

KEY	PART NUMBER	U/M	DESCRIPTION
1	131494-05-01A	EA	MIRROR - ARCHED TOP - 20" X 30"
2	132610-05-26A	FT	WALLPAPER - BORDER - 7" - SELF-ADHESIVE (T11, TK0)
2	132610-05-32A	FT	WALLPAPER - BORDER - 7" - SELF-ADHESIVE (T12, TK1)
2	132610-05-30A	FT	WALLPAPER - BORDER - 7" - SELF-ADHESIVE (T13, TK2)
3	007021-01-000	EA	SEAT BELT - 2" X 90" - BLACK
4	145980-04-02A	EA	TOWEL BAR - POST - PAIR - CHROME
5	145980-05-02A	EA	TOWEL BAR - 18" - CHROME
6	145980-01-02A	EA	HOLDER - TOILET TISSUE - CHROME
7	154430-01-000	EA	MATTRESS - INNERSPRING - 60" X 74.5"

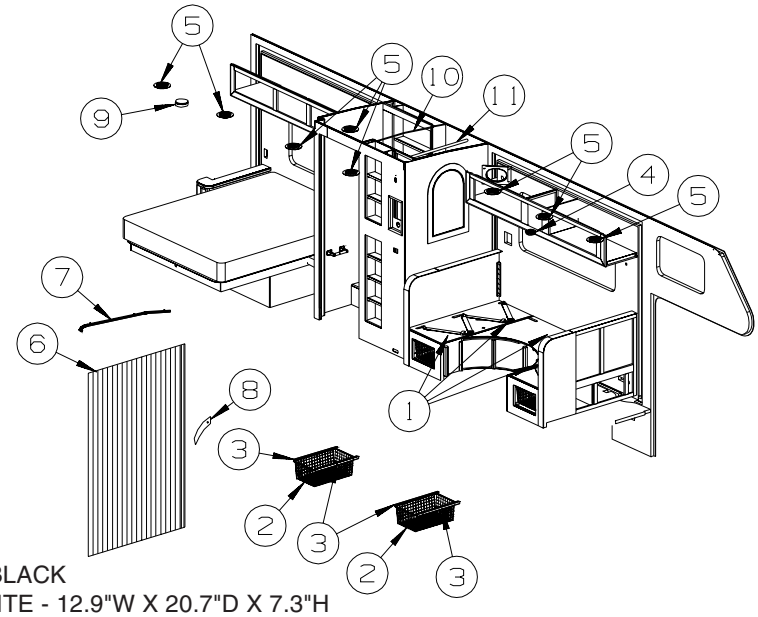

KEY	PART NUMBER	U/M	DESCRIPTION
1	007021-01-000	EA	SEAT BELT - 2" X 90" - BLACK
2	149728-01-01A	EA	BASKET/DRAWER - WHITE - 12.9"W X 20.7"D X 7.3"H
3	149728-02-01A	EA	RUNNER/RAIL - F/BASKET - 21"DEEP
4	072852-01-000	EA	DETECTOR - SMOKE - W/9 VOLT BATTERY - US
4	072852-02-000	EA	DETECTOR - SMOKE - W/9 VOLT BATTERY - CANADIAN
4	077956-01-000	EA	LABEL - WARNING/SMOKE DETECTOR
5	120134-01-02A	EA	REGISTER - W/DAMPER - 4" PIPE/6.4" O.D. FACE - WHITE
6*	131595-10-01A	EA	DOOR/FOLDING -47.2" X 74.9"-4 CEILING BRKTS/STRAIGHT TRACK
7	131595-12-01A	EA	TRACK - DOOR - CURVED - 36.8"
8	057534-03-000	EA	TIEBACK - CLEAR PLASTIC - 7.5"
9	125136-02-000	EA	DETECTOR/CO - GAS MODEL - 9 VOLT
10*	135615-02-01A	EA	DOOR - SHOWER/FOLDING - 34.1" X 62.9" - WHITE
11	102075-16-02A	EA	ROD - SHOWER CURTAIN - 3/4"OD X 34.2" - SOFT WHITE FROM: 00-00-00 THRU: 10-30-05
11	102075-06-02A	EA	ROD - SHOWER CURTAIN - 1" OD X 46.3" - SOFT WHITE FROM: 10-31-05 THRU: 99-99-99
	081114-02-000	EA	CAP - INSERT/ROUND - 1” DIAMETER - WHITE PLASTIC

***COMPONENT PARTS LISTED LATER IN THIS GROUP**

COPYRIGHT © 2006 WINNEBAGO INDUSTRIES INC.

INTERIOR FINISH GROUP (CONTINUED)

COMPONENT PARTSFOR INTERIOR TRIM LAYOUT

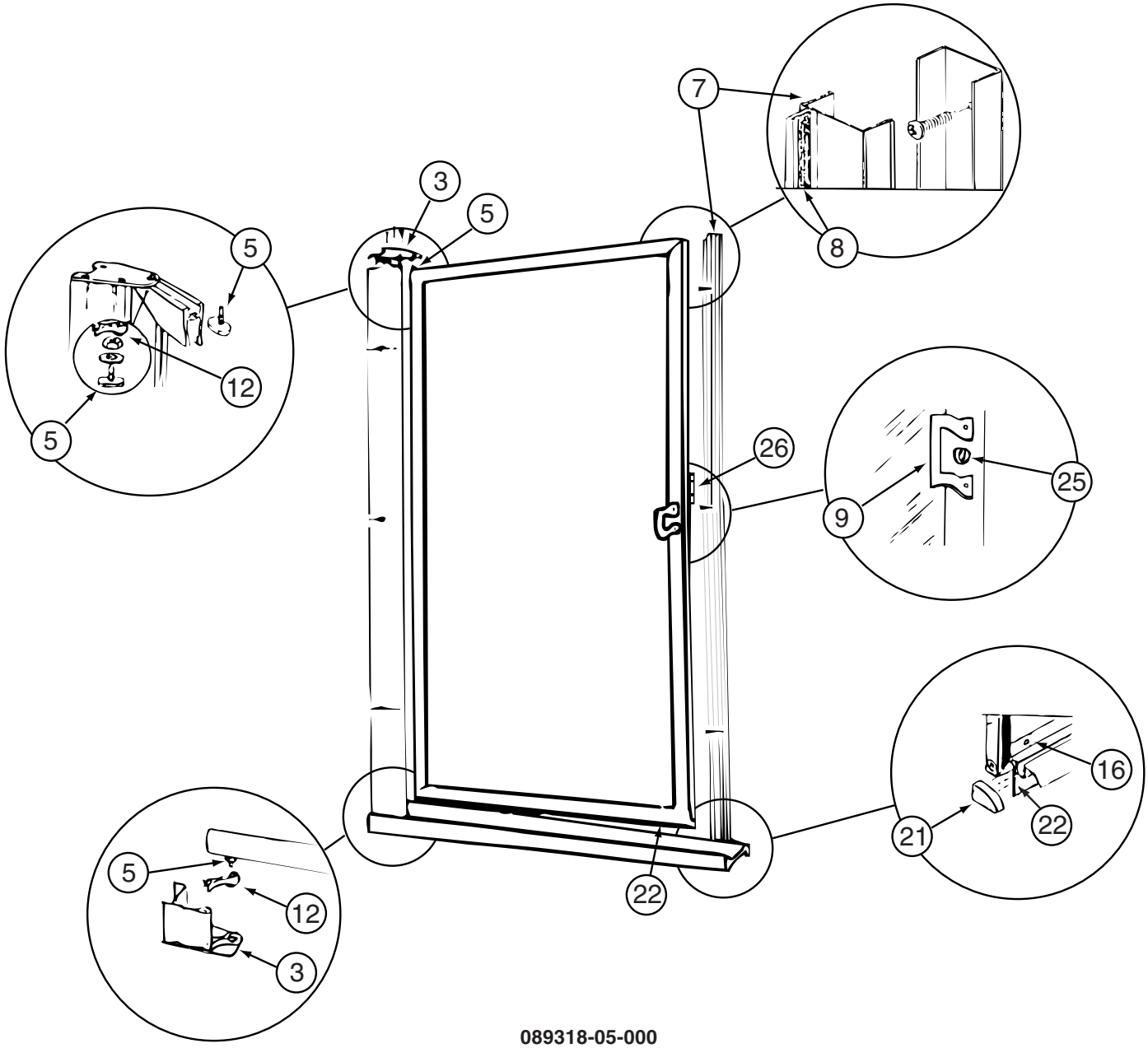

089318-05-000

KEY	PART NUMBER	U/M	DESCRIPTION	VENDOR NO.
2	147577-01-700	EA	STRIKE-JAMB-W/MAGNETIC STRIP	150B
6	089318-01-704	EA	BOLT-PIVOT, TOP OR BOTTOM	1428B
9	089318-01-706	EA	PLATE - PIVOT (UPPER/LOWER)	796
10	089318-01-702	EA	BUSHING W/ARM, LOWER	18712A
11	131618-01-703	EA	PIVOT NUT	1428N
12	147577-01-708	EA	BAR - TOWEL - 17 5/16"	68B
13	147577-01-701	EA	BRACKET-DOOR PULL/TOWEL BAR	8141C
14	147577-01-702	EA	BRACKET/DOOR PULL-W/O STUDS	8149B
15	147577-01-704	EA	DRIP - RAIL - (SWEEP)	927B
16	089318-01-701	FT	SWEEP-VINYL-1 1/8"W WHITE	C171G 500FT RL
17	089318-05-700	EA	PLUG - DRIP CAP (SET)	DCP2
18	089318-01-707	EA	LATCH/CATCH-TURN-SAFETY-BLK	9730N
19	147577-01-706	EA	SCREW - F/TOWEL BAR	83212B
22	147577-01-703	EA	SCREW - #6X3/8"	638B
24	147577-01-705	EA	STRIP - MAGNETIC - 66"	98-41

CONTACT WINNEBAGO PART SALES FOR UNLISTED COMPONENT(S)

COPYRIGHT © 2006 WINNEBAGO INDUSTRIES INC.

INTERIOR FINISH GROUP (CONTINUED)

COMPONENT PARTSFOR INTERIOR TRIM LAYOUT (CONTINUED)

094499-02-000

KEY	PART NUMBER	U/M	DESCRIPTION	VENDOR NO
	094499-01-700	EA	BRACKET MTG. W/PLAS. STRAP	294039

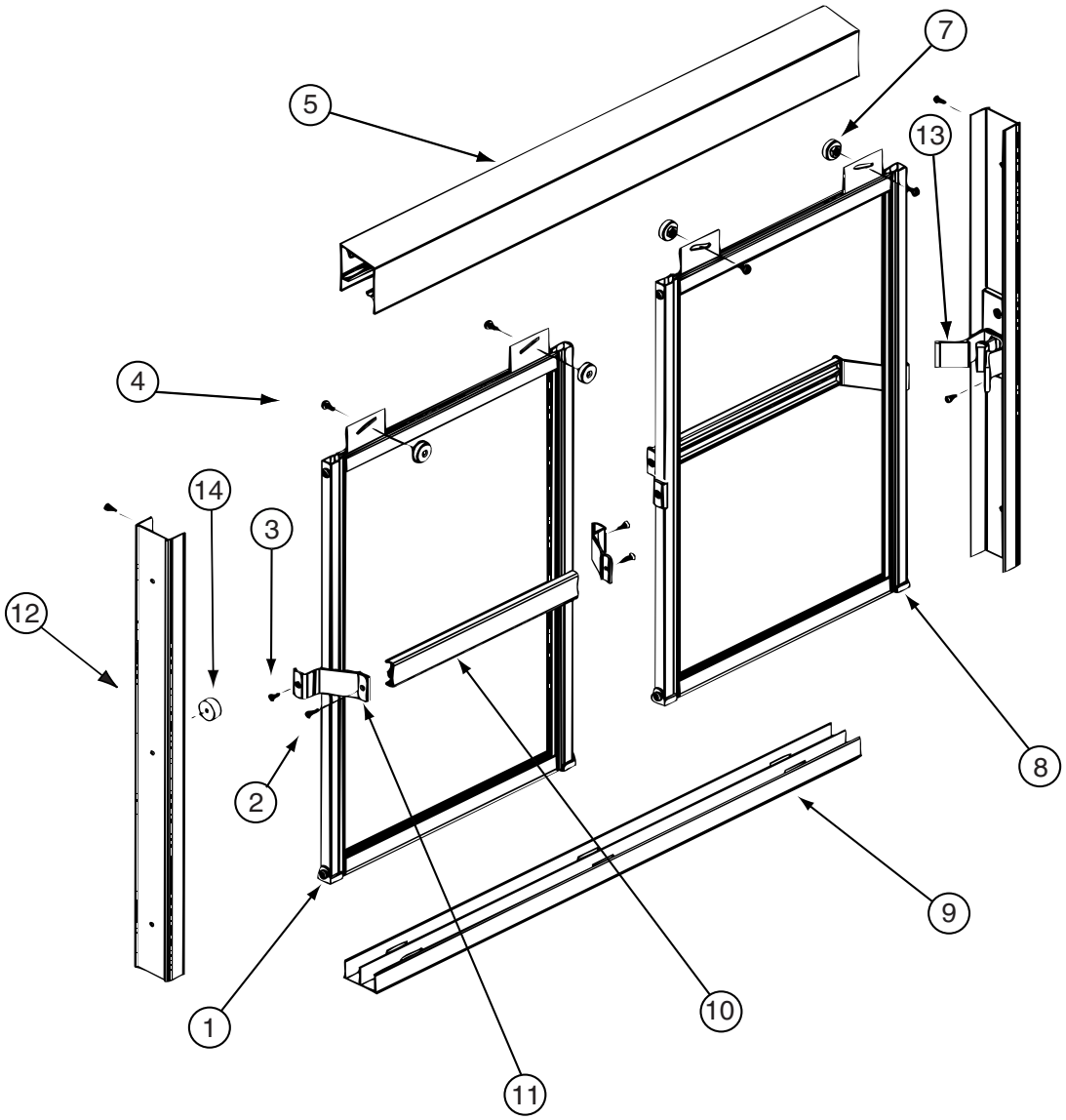

115011-03-02A

KEY	PART NUMBER	U/M	DESCRIPTION	VENDOR NO.
1	115011-03-708	EA	GUIDE/NYLON -F/DOOR BOTTOM	CP1105
2	115011-03-700	EA	SCREW F/TOWEL BAR/HEADER	612F-B
3	115011-03-703	EA	SCREW F/TOWEL BAR BRKTS	638F-B CHROME
4	115011-01-705	EA	SCREW-ROLLER, (HEX HEAD)	832HEX
5	115011-03-709	EA	HEADER - CHROME	45B
7	115011-01-704	EA	ROLLERS	PN193
8	115011-01-706	FT	GLAZING VINYL-BLACK	C154B
9	115011-03-704	EA	TRACK/BOTTOM - 50" CHROME	90B
10	115011-03-701	EA	TOWEL BAR - SILVER	136B - 17"
11	115011-03-702	EA	BRACKET-TOWEL BAR - SILVER	135B
12	115011-03-706	EA	JAMB - WALL SHOWER DOOR	126B
13	115011-03-707	EA	TRAVEL LATCH - BLACK	9733B
	115011-01-714	EA	BUMPER - RATTLE/SHOWER DOOR	5168S
	115011-01-715	EA	PAD - FOAM	116R
			CONTACT WINNEBAGO PART SALES FOR UNLISTED COMPONENT(S)	

COPYRIGHT © 2006 WINNEBAGO INDUSTRIES INC.

INTERIOR FINISH GROUP (CONTINUED)

COMPONENT PARTSFOR INTERIOR TRIM LAYOUT (CONTINUED)

131595-01-01A, 131595-05-01A, 131595-10-01A

KEY	PART NUMBER	U/M	DESCRIPTION	VENDOR NO.
	117431-01-707	EA	CATCH/PIN - PLASTIC	
	131595-01-700	EA	END STOP ONLY	
	131595-01-701	EA	BRACKET/MOUNTING	908956
	131595-01-702	EA	TRACK/STRAIGHT - 37"	

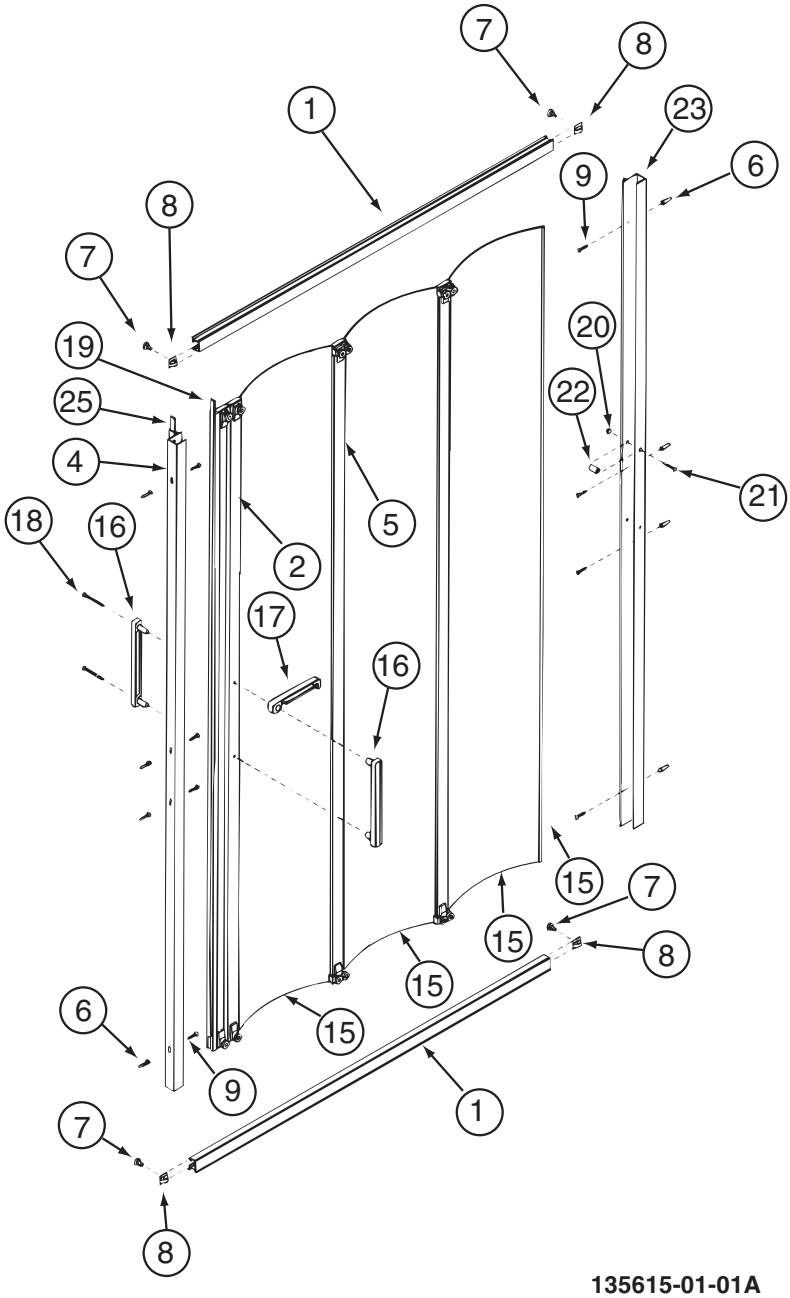

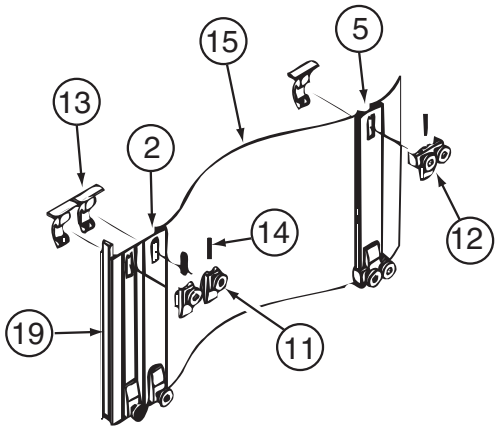

Roller Assembly Detail

135615-01-01A

KEY	PART NUMBER	U/M	DESCRIPTION	VENDOR NO.
1	135615-01-702	EA	TRACK - (TOP/BOTTOM) - 40"	117W
2	135615-01-701	EA	STRIKE ASSEMBLY - 66"	109W
4	135615-01-703	EA	JAMB/WALL - W/O MAG STRIKE 66"	112W
11	108351-01-703	EA	BRACKET & ROLLER ASM. SINGLE	GRB1
12	108351-01-704	EA	BRACKET & ROLLER ASM. DOUBLE	GRB2
13	108351-01-705	EA	CLIP ONLY F/SGL/DBL ROLLER	GRC1
14	108351-01-706	EA	SPRING-ROLLER BRACKET	GS1
15	135615-01-705	EA	PANEL/SHOWER DR-1 ONLY-9"	PP9WPVC.65 F/71WH-W
16	108351-01-701	EA	HANDLES-DOOR, SET	SFH
17	108351-01-702	EA	LATCH-DOOR	SFL
23	135615-01-704	EA	JAMB/WALL PANEL RECEIVER-66"	110W
25	135615-01-700	EA	STRIP/MAGNETIC - 66"	98-41W

CONTACT WINNEBAGO PART SALES FOR UNLISTED COMPONENT(S)

COPYRIGHT © 2006 WINNEBAGO INDUSTRIES INC.

INTERIOR FINISH GROUP (CONTINUED)

COMPONENT PARTSFOR INTERIOR TRIM LAYOUT (CONTINUED)

135615-02-01A

KEY	PART NUMBER	U/M	DESCRIPTION	VENDOR NO.
1	135615-01-702	EA	TRACK - (TOP/BOTTOM) - 40"	117W
2	135615-01-701	EA	STRIKE ASSEMBLY - 66"	109W
4	135615-01-703	EA	JAMB/WALL - W/O MAG STRIKE 66"	112W
11	108351-01-703	EA	BRACKET & ROLLER ASM. SINGLE	GRB1
12	108351-01-704	EA	BRACKET & ROLLER ASM. DOUBLE	GRB2
13	108351-01-705	EA	CLIP ONLY F/SGL/DBL ROLLER	GRC1
14	108351-01-706	EA	SPRING-ROLLER BRACKET	GS1
16	108351-01-701	EA	HANDLES-DOOR, SET	SFH
17	108351-01-702	EA	LATCH-DOOR	SFL
23	135615-01-704	EA	JAMB/WALL PANEL RECEIVER-66"	110W
25	135615-01-700	EA	STRIP/MAGNETIC - 66"	98-41W
			CONTACT WINNEBAGO PART SALES FOR UNLISTED COMPONENT(S)	

135615-05-01A

KEY	PART NUMBER	U/M	DESCRIPTION	VENDOR NO.
1	135615-01-702	EA	TRACK - (TOP/BOTTOM) - 40"	117W
2	135615-01-701	EA	STRIKE ASSEMBLY - 66"	109W
4	135615-01-703	EA	JAMB/WALL - W/O MAG STRIKE 66"	112W
11	108351-01-703	EA	BRACKET & ROLLER ASM. SINGLE	GRB1
12	108351-01-704	EA	BRACKET & ROLLER ASM. DOUBLE	GRB2
13	108351-01-705	EA	CLIP ONLY F/SGL/DBL ROLLER	GRC1
14	108351-01-706	EA	SPRING-ROLLER BRACKET	GS1
15	135615-05-700	EA	PANEL/SHOWER DR-1 ONLY-9"	PP9WPVC.65 F/75WH-W
16	108351-01-701	EA	HANDLES-DOOR, SET	SFH
17	108351-01-702	EA	LATCH-DOOR	SFL
23	135615-01-704	EA	JAMB/WALL PANEL RECEIVER-66"	110W
25	135615-01-700	EA	STRIP/MAGNETIC - 66"	98-41W
			CONTACT WINNEBAGO PART SALES FOR UNLISTED COMPONENT(S)	

COPYRIGHT © 2006 WINNEBAGO INDUSTRIES INC.

INTERIOR FINISH GROUP (CONTINUED)

COMPONENT PARTSFOR INTERIOR TRIM LAYOUT (CONTINUED)

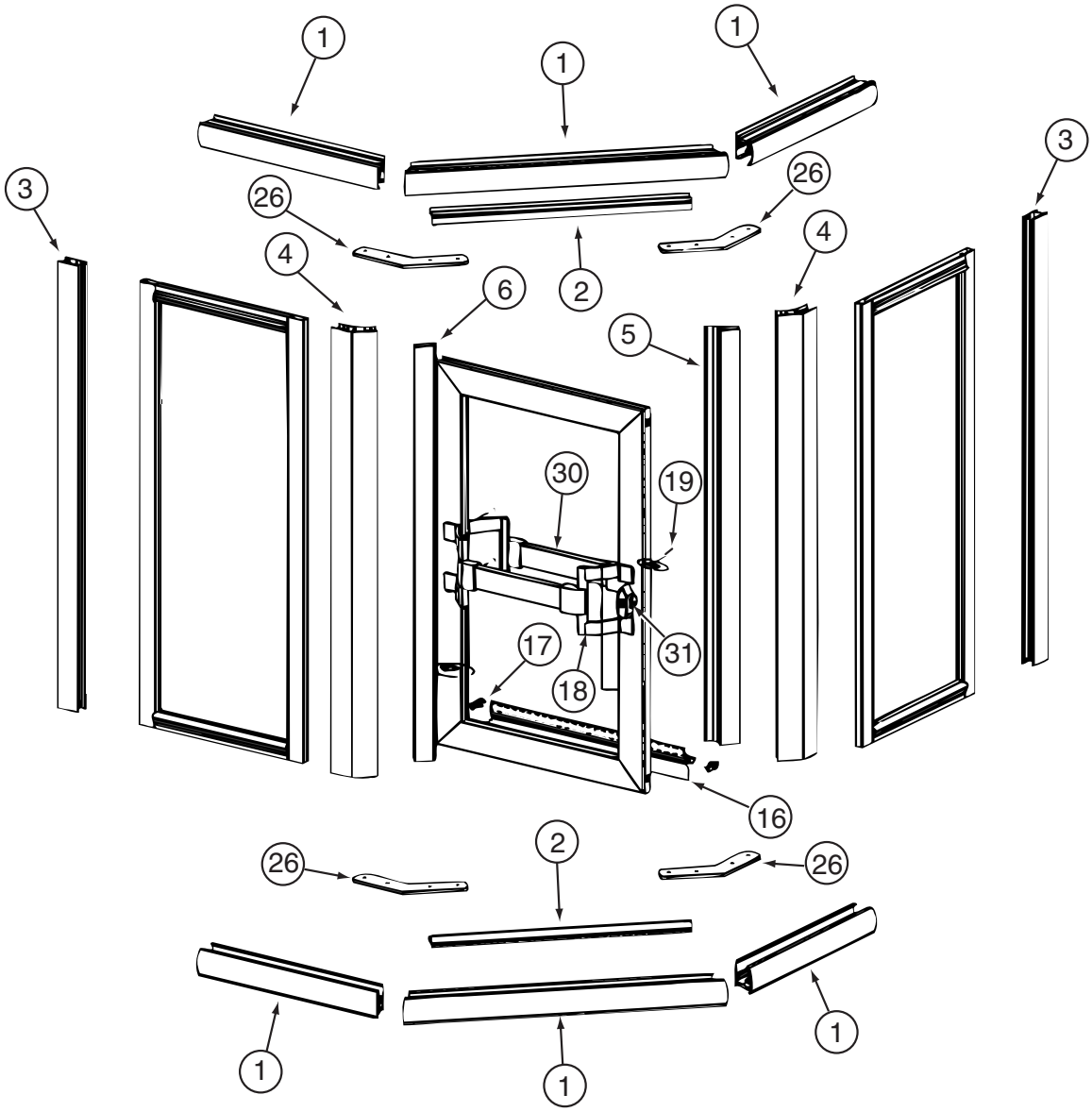

139047-01-05A, 139047-03-05A, 139047-05-02A/-03A

KEY	PART NUMBER	U/M	DESCRIPTION	VENDOR NO.
1	139047-03-700	EA	HEADER/SILL (PAIR) - CHROME	900B
2	139047-03-701	EA	DAM STRIP-TOP/BOTTOM-35.4"	901B
3	139047-03-702	EA	JAMB - WALL - 65.9"	903B
4	139047-03-703	EA	CORNER POST-45 DEGREE- 65.9"	909B
5	139047-03-704	EA	STRIKE - JAMB - 64.6"	926B
6	139047-03-705	EA	HINGE/POST - DOOR - 64.5"	920B
16	139047-01-710	EA	VINYL SWEEP	C176G
17	139047-01-711	EA	PLUG - DRIP CAP (SET) BLACK	CP933 - BLACK
18	147577-01-701	EA	BRACKET-DOOR PULL/TOWEL BAR	8141C
19	147577-01-706	EA	SCREW - F/TOWEL BAR	83212B
26	139047-01-712	EA	HEADER - CORNER BRACKET	313.45C
30	147577-01-708	EA	BAR - TOWEL - 17 5/16"	68B
31	089318-01-707	EA	LATCH/CATCH - SAFETY - BLACK	9730N
	139047-01-706	EA	HINGE PINS	CP932
	139047-01-707	EA	WASHERS - HINGE	CP148TW
	139047-01-708	EA	HINGE - SLEEVE - 61.5"	C921B
	139047-01-709	EA	STRIP - MAGNETIC- 55" (NARROW)	98-42
	147577-01-704	EA	DRIP - RAIL - (SWEEP)	927B
			CONTACT WINNEBAGO PART SALES FOR UNLISTED COMPONENT(S)	

COPYRIGHT © 2006 WINNEBAGO INDUSTRIES INC.

INTERIOR FINISH GROUP (CONTINUED)

FLOOR COVERINGS

KEY	PART NUMBER	U/M	DESCRIPTION
	075233-01-000	SY	PAD - CARPET - 3/8" X 6' ROLL
	089275-02-000	FT	STRIP - 3/4" X 84" BLACK POLYETHYLENE
	093486-01-000	SY	CARPET - COMPARTMENT - 72" WIDE - DARK GRAY
	152251-05-01A	SY	CARPET - 4 SQUARE YARD INCREMENTS - SAGE (T11, TK0)
	152251-06-01A	SY	CARPET - 4 SQUARE YARD INCREMENTS - WHEAT (T12, TK1)
	152251-05-06A	SY	CARPET - 4 SQUARE YARD INCREMENTS - CAST IRON (T13, TK2, TR0)
	152251-05-03A	SY	CARPET - 4 SQUARE YARD INCREMENTS - CLOUD BURST (TS5)
	042720-33-000	SY	VINYL - FLOOR COVERING - DIAMOND
	042720-34-000	SY	VINYL - FLOOR COVERING - CALAY/SIERRA SAND - 331K ONLY

COPYRIGHT © 2006 WINNEBAGO INDUSTRIES INC.

INTERIOR FINISH GROUP (CONTINUED)

HARDWARE

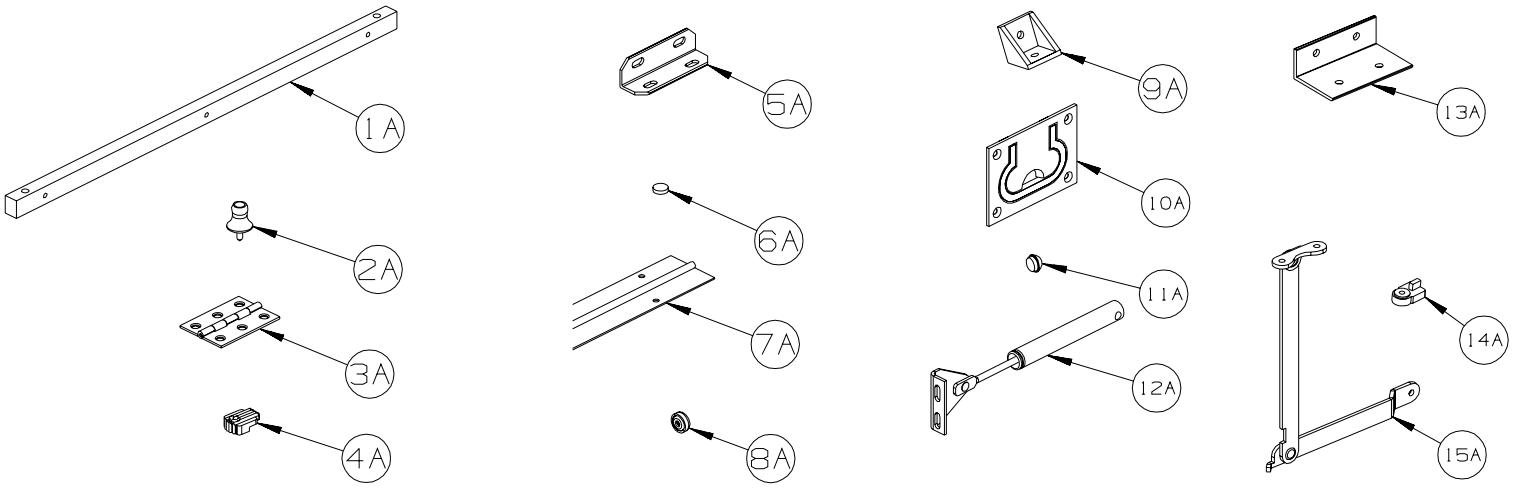

KEY	PART NUMBER	U/M	DESCRIPTION
1A	P34509-01-N01	EA	RAIL END - RH/LH - TOWEL RACK - PORTSMOUTH
1A	P34509-01-P14	EA	RAIL END - RH/LH - TOWEL RACK - CONCERT CHERRY
1A	P34509-01-J70	EA	RAIL END - RH/LH - TOWEL RACK - WASHED MAPLE
1A	P34509-01-RE0	EA	RAIL END - RH/LH - TOWEL RACK - HONEY CHERRY
1A	P34509-01-SA3	EA	RAIL END - RH/LH - TOWEL RACK - SIERRA MAPLE
2A	009013-01-000	EA	CATCH - BULLDOG - MALE/FEMALE
3A	009059-01-000	EA	HINGE - DOOR - 2" X 1.4" - BRASS
3A	009059-02-000	EA	HINGE - DOOR - 2" X 2.7" - BRASS
3A	009059-03-000	EA	HINGE - BRASS - 1.75"
3A	009059-04-000	EA	HINGE - 2” - ZINC
4A	009089-01-000	EA	CLIP - MIRROR
5A	016604-01-000	EA	BRACE - ANGLE - 2 1/2" - UNPAINTED METAL
5A	016604-05-000	EA	BRACE - ANGLE - 2 1/2" - OFF WHITE METAL
5A	016604-10-000	EA	BRACE - SEAT ANGLE - 2.5" - BLACK
6A	023320-01-000	EA	PAD - FELT 3/8" DIAMETER
7A	041389-19-000	EA	HINGE - PIANO - 1 1/2" X 71.9" - UNPAINTED
7A	041389-25-000	EA	HINGE - PIANO - 1 1/2" X 55" - UNPAINTED
7A	041389-32-000	EA	HINGE - PIANO - 68" - OFF WHITE
8A	057671-01-000	EA	COVER - SCREW - #8 - OFF WHITE
8A	057671-15-000	EA	COVER - SCREW - #8 - BRIGHT WHITE
8A	057671-16-000	EA	COVER - SCREW - #8 - SOFT WHITE
8A	057671-18-000	EA	COVER - SCREW - #8 - OFF WHITE
9A	065740-01-000	EA	BRACE - CABINET/CORNER - PLASTIC
10A	072871-01-000	EA	PULL - FLUSH - CHROME
11A	074045-13-000	EA	PLUG - OAK - 3/8" DOWEL-1/2" HEAD - PORTSMOUTH OAK
11A	074045-08-000	EA	PLUG - OAK - 3/8" DOWEL-1/2" HEAD - CONCERT CHERRY
11A	074045-12-000	EA	PLUG - OAK - 3/8" DOWEL-1/2" HEAD - WASHED MAPLE
11A	074045-14-000	EA	PLUG - OAK - 3/8" DOWEL-1/2" HEAD - HONEY CHERRY
11A	074045-15-000	EA	PLUG - OAK - 3/8" DOWEL-1/2" HEAD - SIERRA MAPLE
12A	074493-02-000	EA	SUPPORT - PISTON SPRING - CABINET DOOR - 26 LBS
12A	074493-03-000	EA	SUPPORT - PISTON SPRING - CABINET DOOR - 12 LBS
12A	074493-04-000	EA	SUPPORT - PISTON SPRING - CABINET DOOR - 32LBS
13A	083125-07-000	EA	BRACE - ANGLE/COUCH - 2.5" - OFF WHITE
13A	156732-01-02A	EA	BRACE - ANGLE/COUCH - 2.5" - OFF WHITE
14A	083204-03-000	EA	BUTTON - RETAINING MIRROR 5/16" TIP
15A	084412-01-000	EA	SUPPORT/HINGE KIT (LEFT & RIGHT HINGES)

COPYRIGHT © 2006 WINNEBAGO INDUSTRIES INC.

INTERIOR FINISH GROUP (CONTINUED)

HARDWARE (CONTINUED)

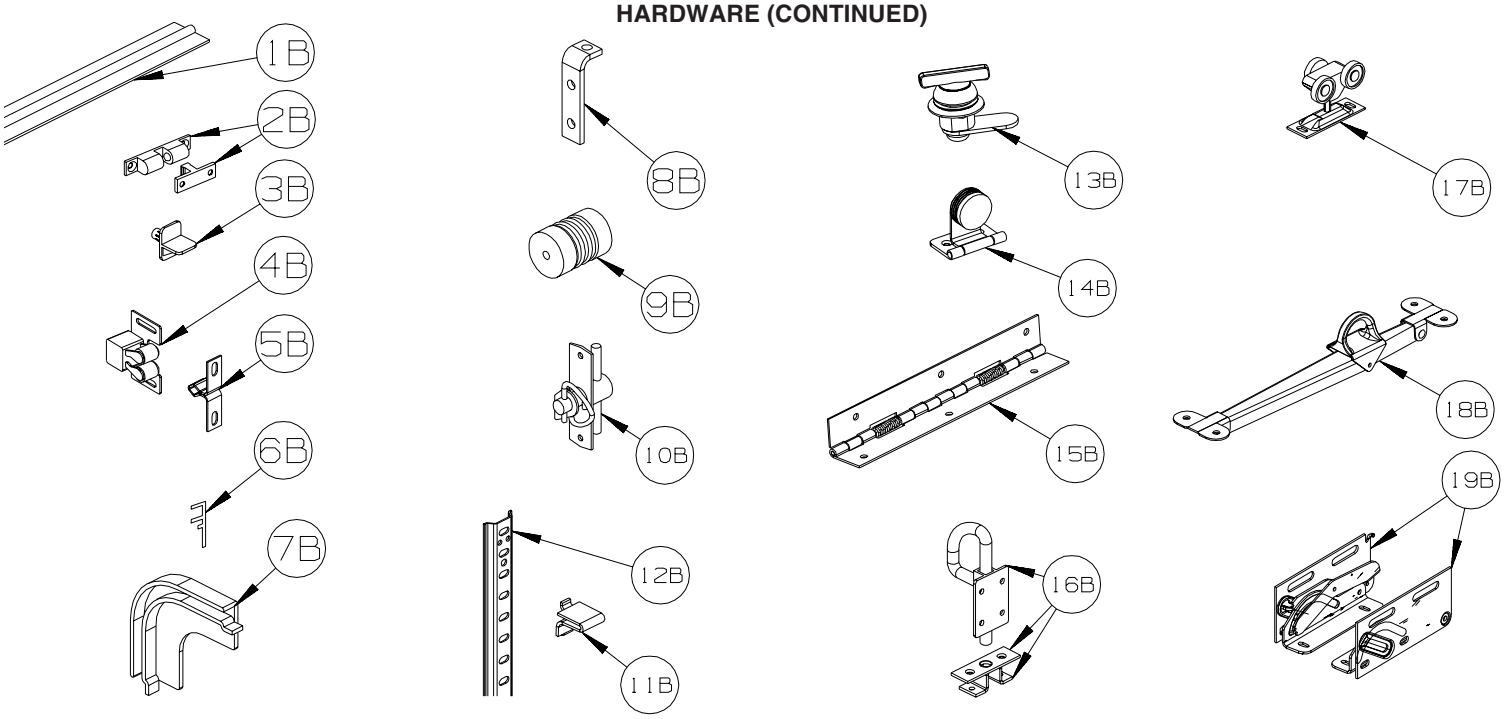

KEY	PART NUMBER	U/M	DESCRIPTION
1B	084413-01-000	EA	HINGE - 1" X 72" - ALUMINUM - W/HOLES
1B	134099-01-02A	EA	HINGE - PIANO - WRAP AROUND - 15.7" - NICKEL PLATED
2B	084451-01-000	EA	CATCH & LATCH - 1.7" - BRASS
3B	092907-01-000	EA	SUPPORT - SHELF - PIN - 1/4" - CLEAR PLASTIC
4B	093586-03-000	EA	CATCH - SPRING ROLLER - .377"
4B	093586-06-000	EA	CATCH - SPRING ROLLER - .236"
5B	093586-04-000	EA	STRIKE - SPRING STEEL - 1.14"
5B	093586-05-000	EA	STRIKE - SPRING STEEL - .943"
6B	093622-01-000	EA	TRACK - DOOR - TAMBOUR - PLASTIC - 8' LENGTHS
7B	093623-01-000	EA	CORNER - TRACK - TAMBOUR DOOR
8B	096826-01-01A	EA	BRACE-CABINET E-COATED
9B	097872-04-000	EA	DOWEL - WOOD - 1" DIAMETER X 1.38" LONG - UNFINISHED
10B	098196-01-000	EA	LATCH - 1/4 TURN - T-BAR
11B	098979-01-000	EA	CLIP - ADJUSTABLE SHELF
12B	098980-01-000	EA	PILASTER - ADJUSTABLE SHELF - 18"
12B	098980-02-000	EA	PILASTER - ADJUSTABLE SHELF - 12"
12B	098980-03-000	EA	PILASTER - ADJUSTABLE SHELF - 9"
12B	098980-04-000	EA	PILASTER - ADJUSTABLE SHELF - 48"
12B	098980-05-000	EA	PILASTER - ADJUSTABLE SHELF - 15"
12B	098980-06-000	EA	PILASTER - ADJUSTABLE SHELF - 24"
13B	100710-01-02A	EA	LOCK - GLASS DOOR/TWIST TYPE - NICKEL
14B	100711-01-02A	EA	HINGE - GLASS DOOR - NICKEL
15B	102920-01-01A	EA	HINGE - SPRING LOADED - BRASS
15B	102920-01-02A	EA	HINGE - SPRING LOADED - NICKEL
15B	129753-01-01A	EA	HINGE - SPRING LOADED - 19" X 19" - BLACK
16B	103256-01-000	EA	LATCH COMPLETE (SLIDE)
17B	103874-01-000	EA	HANGER - SLIDING DOOR
18B	104181-01-01A	EA	SUPPORT - LEAF 5.3" EXTENDS TO 7.5" - SAFETY RING - METAL
19B	108126-01-000	EA	TRAY HINGE SET (QTY. 2 PER SET)

COPYRIGHT © 2006 WINNEBAGO INDUSTRIES INC.

INTERIOR FINISH GROUP (CONTINUED)

HARDWARE (CONTINUED)

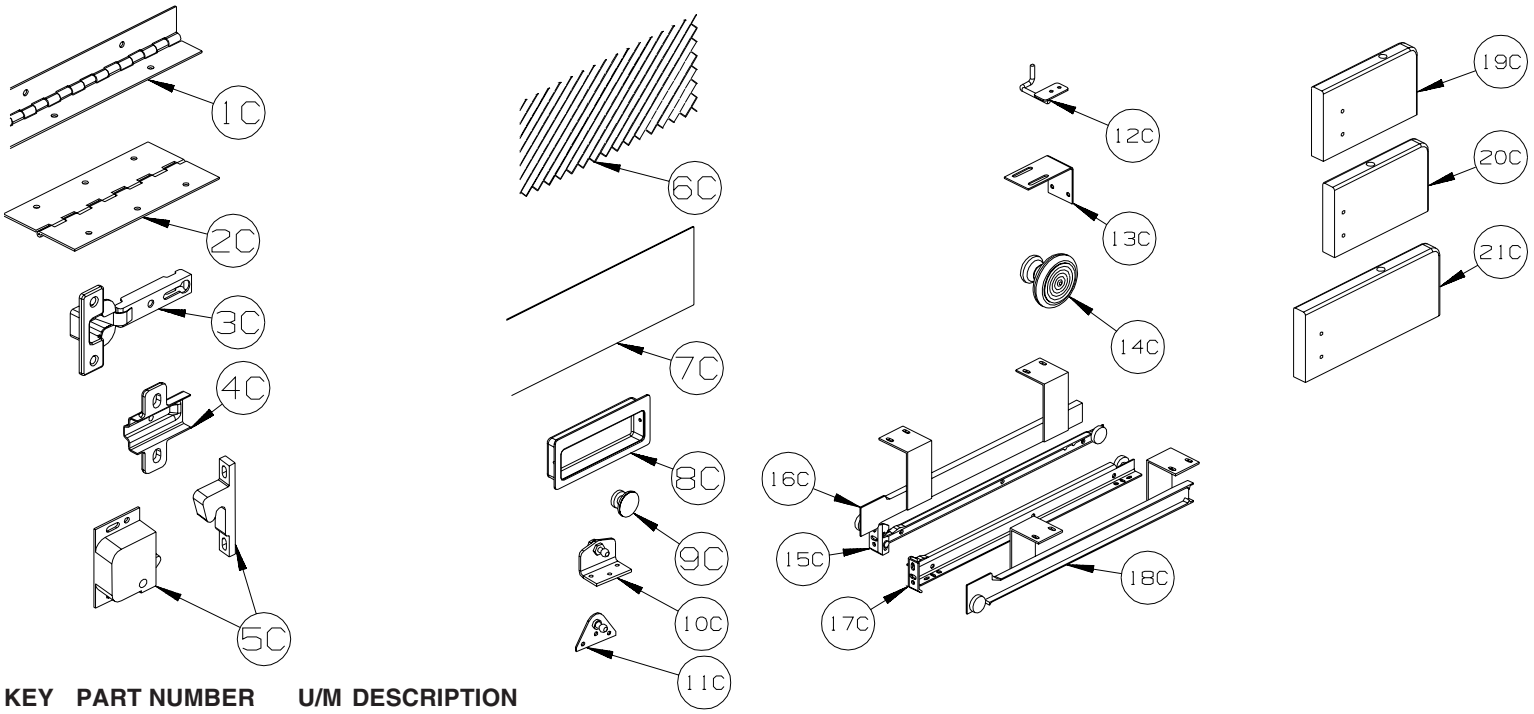

KEY	PART NUMBER	U/M	DESCRIPTION
1C	110496-01-01A	EA	HINGE - BRASS - 2” X 32”
1C	110496-01-02A	EA	HINGE - NICKEL - 2” X 32”
1C	110496-05-02A	EA	HINGE - NICKEL - 2" X 11.5"
2C	114278-02-000	EA	HINGE - CONTINUOUS - 3" WIDE
3C	114443-02-01A	EA	HINGE - CABINET DOOR - W/O CLIP - SILVER
4C	114443-03-01A	EA	CLIP - HINGE/CABINET DOOR - SILVER
5C	117095-01-01A	EA	LATCH - DOOR - GRABBER W/KEEPER - PLASTIC - BLK-5 LB PULL
5C	117095-02-01A	EA	LATCH - DOOR - GRABBER W/KEEPER - PLASTIC - BLK-10 LB PULL
5C	117095-03-01A	EA	LATCH - DOOR - GRABBER W/KEEPER - PLASTIC - BLK-15 LB PULL
6C	118200-01-01A	SF	MESH - PLASTIC 1/2" - 48" X LENGTH = SF - BLACK
7C	122717-06-01A	FT	PAD - NON-SKID - PSA - 5"W
8C	124311-01-01A	EA	HANDLE - RECESSED - BRASS
9C	125221-01-01A	EA	PULL - MIRROR - W/ROUND HANDLE
10C	126263-06-02B	EA	BRACKET - GAS SPRING W/INSIDE BALL STUD - E-COATED
	057460-02-000	EA	BALL STUD - F/GAS SPRING .39” - 5/16” -18
11C	126263-05-02B	EA	BRACKET - GAS SPRING W/BALL STUD - E-COATED
	057460-02-000	EA	BALL STUD - F/GAS SPRING .39” - 5/16” -18
11C	126263-08-02B	EA	BRACKET - GAS SPRING W/CENTERED BALL STUD - E-COATED
11C	126263-19-02B	EA	BRACKET - GAS SPRING W/BALL STUD - E-COATED
12C	130798-01-02B	EA	GUIDE - POCKET DOOR - E-COATED
13C	132871-02-02B	EA	BRACKET/L-ANGLE W/HOLES - 1.9" X 2.8" - E-COATED
14C	133313-01-03A	EA	PULL - DOOR/DWR - CHROME/BRASS - SPIRIT 300 SERIES, SUNDANCER AND SUNRISE
15C	136944-01-01A	EA	SLIDE - DRAWER/RIGHT HAND - 13.8"
16C	136944-02-01A	EA	SLIDE - CABINET/RIGHT HAND - 13.8"
17C	136944-03-01A	EA	SLIDE - DRAWER/LEFT HAND - 13.8"
18C	136944-04-01A	EA	SLIDE - CABINET/LEFT HAND - 13.8"
19C	137445-01-N42	EA	STOP - F/SLIDING DOOR - PORTSMOUTH OAK
19C	137445-01-P46	EA	STOP - F/SLIDING DOOR - CONCERT CHERRY
19C	137445-01-P56	EA	STOP - F/SLIDING DOOR - WASHED MAPLE
19C	137445-01-S67	EA	STOP - F/SLIDING DOOR - SIERRA MAPLE
20C	137445-02-P45	EA	STOP - F/SLIDING DOOR - PORTSMOUTH OAK
20C	137445-02-P46	EA	STOP - F/SLIDING DOOR - CONCERT CHERRY
20C	137445-02-P56	EA	STOP - F/SLIDING DOOR - WASHED MAPLE
20C	137445-02-S67	EA	STOP - F/SLIDING DOOR - SIERRA MAPLE
21C	137445-03-T77	EA	STOP - F/SLIDING DOOR - PORTSMOUTH OAK
21C	137445-03-T78	EA	STOP - F/SLIDING DOOR - CONCERT CHERRY
21C	137445-03-T79	EA	STOP - F/SLIDING DOOR - WASHED MAPLE
21C	137445-03-T80	EA	STOP - F/SLIDING DOOR - SIERRA MAPLE

COPYRIGHT © 2006 WINNEBAGO INDUSTRIES INC.

INTERIOR FINISH GROUP (CONTINUED)

HARDWARE (CONTINUED)

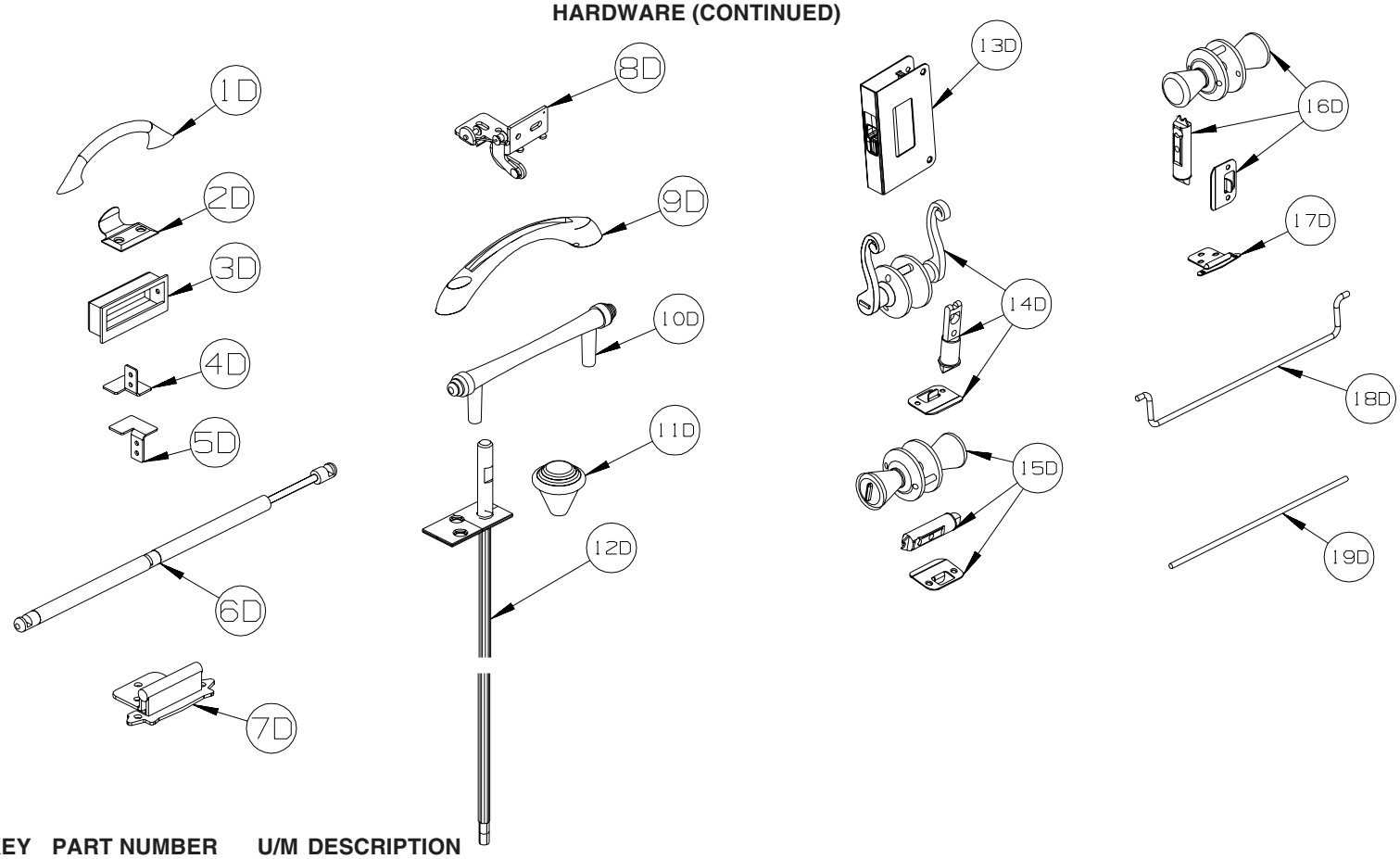

KEY	PART NUMBER	U/M	DESCRIPTION
1D	137446-01-01A	EA	PULL - CABINET - CHROME/BRASS - SPIRIT 300 SERIES, SUNOVA D-SERIES
2D	137463-01-01A	EA	LIFT - HOOK - SATIN BRASS
2D	137463-01-02A	EA	LIFT - HOOK - PEWTER
3D	139136-01-02A	EA	HANDLE - .75” RECESSED - PEWTER
3D	139136-02-01A	EA	HANDLE - .35” RECESSED - BRASS
3D	139136-02-02A	EA	HANDLE - .35” RECESSED - PEWTER
4D	139264-01-02B	EA	STOP - DOOR - TAMBOUR/RH HAND - E-COATED
5D	139264-02-02B	EA	STOP - DOOR - TAMBOUR/LH HAND - E-COATED
6D	142569-07-000	EA	SPRING/GAS - 20 LB - 20" EXTENDED/12" COMPRESSED
6D	142569-15-000	EA	SPRING/GAS - 120 LB - 20" EXTENDED/12" COMPRESSED
6D	142569-16-000	EA	SPRING/GAS - 90 LB - 20" EXTENDED/12" COMPRESSED
6D	142569-29-000	EA	SPRING/GAS - 20 LB - 9.9" EXTENDED/5.9" COMPRESSED
7D	143468-02-03A	EA	HINGE - SELF CLOSING - SATIN NICKEL
8D	144488-01-02A	EA	HINGE - CABINET - NICKEL
9D	144917-01-01A	EA	PULL - DRAWER - SATIN NICKEL - TOUR R-SERIES
10D	145172-01-02A	EA	PULL - CABINET DOOR - CHROME - ADVENTURER G-SERIES, JOURNEY P-SERIES
11D	145172-02-02A	EA	KNOB - CABINET DOOR - CHROME - ADVENTURER G-SERIES, JOURNEY P-SERIES
12D	145939-03-01A	EA	ROD/LATCH - AISLE DOOR - BRASS
13D	145939-04-02A	EA	LATCH/SLIDE - AISLE DOOR(1" THICK DOOR)-NICKEL/BLACK SLIDE
14D	146064-01-01A	EA	LOCK/PRIVACY (LOCKING) LEVER STYLE - POLISHED BRASS
14D	146064-01-02A	EA	LOCK/PRIVACY (LOCKING) LEVER STYLE - SATIN PEWTER
15D	146064-05-01A	EA	LOCK/PRIVACY (LOCKING) KNOB STYLE - SATIN NICKEL
16D	146064-06-01A	EA	LOCK/PASSAGE (NON LOCKING) KNOB STYLE - SATIN NICKEL
17D	146553-01-01A	EA	HINGE - CABINET DOOR - BURNISHED BRASS
17D	146553-01-03A	EA	HINGE - CABINET DOOR - SATIN NICKEL
18D	146801-01-01A	EA	ROD/TOWEL BAR (OFFSET) - BRASS
18D	146801-01-02A	EA	ROD/TOWEL BAR (OFFSET) - PEWTER
19D	146840-03-02A	EA	ROD - .25" X 11.7" - PEWTER
19D	146840-04-02A	EA	ROD - .25" X 13.1" - PEWTER
19D	146840-05-02A	EA	ROD - .25" X 14.8" - PEWTER
19D	146840-07-02A	EA	ROD - .25" X 4.2" - PEWTER

COPYRIGHT © 2006 WINNEBAGO INDUSTRIES INC.

INTERIOR FINISH GROUP (CONTINUED)

HARDWARE (CONTINUED)

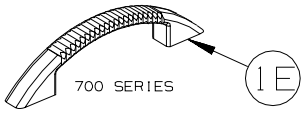

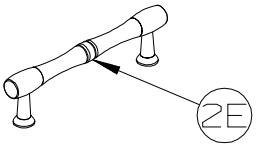

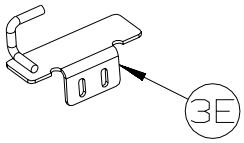

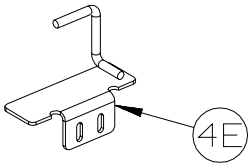

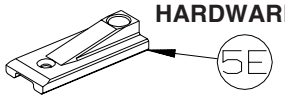

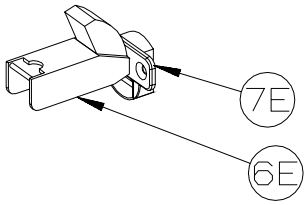

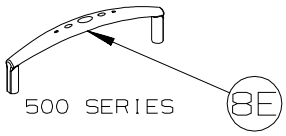

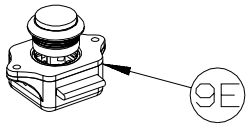

500 SERIES

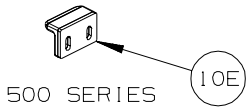

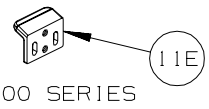

500 SERIES

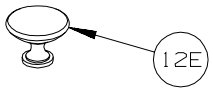

400-SERIES
WINNEBAGO 300-SERIES
WINNEBAGO R-SERIES

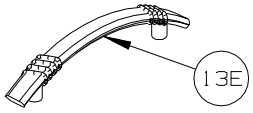

WINNEBAGO 400-SERIES
WINNEBAGO F-SERIES

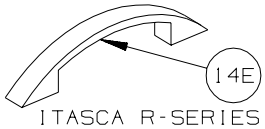

ITASCA R-SERIES
WINNEBAGO S-SERIES

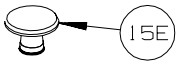

ITASCA R-SERIES
WINNEBAGO S-SERIES

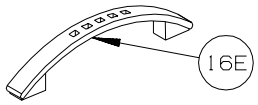

ITASCA 400-SERIES
ITASCA F-SERIES

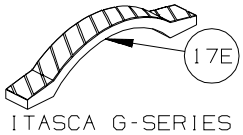

ITASCA G-SERIES
ITASCA P-SERIES

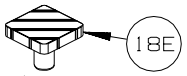

ITASCA G-SERIES
ITASCA P-SERIES

KEY	PART NUMBER	U/M	DESCRIPTION
1E	148816-01-01A	EA	PULL - CABINET DOOR - POLISHED BRASS - 331K ONLY
1E	148816-01-02A	EA	PULL - CABINET DOOR - NICKEL - ASPECT, CAMBRIA 700-SERIES
2E	149090-01-02A	EA	PULL - CABINET DOOR - NICKEL - OUTLOOK 300-SERIES, SIGHTSEER D-SERIES
3E	149607-01-02B	EA	GUIDE - F/POCKET DOOR - 1.6” BENT ROD - E-COATED
3E	149607-03-02B	EA	GUIDE - F/POCKET DOOR - 2.9” BENT ROD - E-COATED
4E	149607-04-02B	EA	GUIDE - F/POCKET DOOR - E-COATED
5E	150983-01-01A	EA	STRIKE/BLOCK - WEDGE STYLE - F/SLIDE DOOR - 3" X 1.2" - BLACK
6E	151305-01-01A	EA	HINGE - CONCEALED/SELF CLOSING - BRASS
7E	151305-02-01A	EA	PLATE/MOUNTING - F/HINGE - WHITE
8E	151372-01-01A	EA	PULL - DOOR/DRAWER - NICKLE - VIEW & NAVION 500-SERIES
9E	151380-01-01A	EA	LATCH - CABINET DOOR - PUSH BUTTON - VIEW & NAVION 500-SERIES
10E	151380-02-01A	EA	STRIKE - CABINET DOOR - VIEW & NAVION 500-SERIES
11E	151380-03-01A	EA	STRIKE - CABINET DOOR - VIEW & NAVION 500-SERIES
12E	152080-01-01A	EA	PULL-NICKEL - OUTLOOK 300-SERIES, MINNIE WINNIE, SUNDANCER 400-SERIES, TOUR R-SERIES
13E	152302-01-01A	EA	PULL - CABINET DOOR - SATIN NICKEL - MINNIE WINNIE 400-SERIES, VOYAGE F-SERIES
14E	152304-01-01A	EA	PULL - CABINET DOOR - BRONZE- ELLIPSE R-SERIES
14E	152304-01-02A	EA	PULL - CABINET DOOR - SATIN NICKEL - VECTRA S-SERIES
15E	152305-01-01A	EA	KNOB - DOOR/DRAWER - BRONZE - ELLIPSE R-SERIES
15E	152305-01-02A	EA	KNOB - DOOR/DRAWER - SATIN NICKEL- VECTRA S-SERIES
16E	152950-01-01A	EA	PULL - DOOR/DRAWER - BRUSHED NICKEL - SUNDANCER 400-SERIES, SUNRISE F-SERIES
17E	152951-01-01A	EA	PULL - DOOR/DRAWER - PEWTER - SUNCRUISER G-SERIES, MERIDIAN P-SERIES
18E	152952-01-01A	EA	PULL - KNOB/DRAWER - PEWTER - SUNCRUISER G-SERIES, MERIDIAN P-SERIES

COPYRIGHT © 2006 WINNEBAGO INDUSTRIES INC.

INTERIOR FINISH GROUP (CONTINUED)

HARDWARE (CONTINUED)

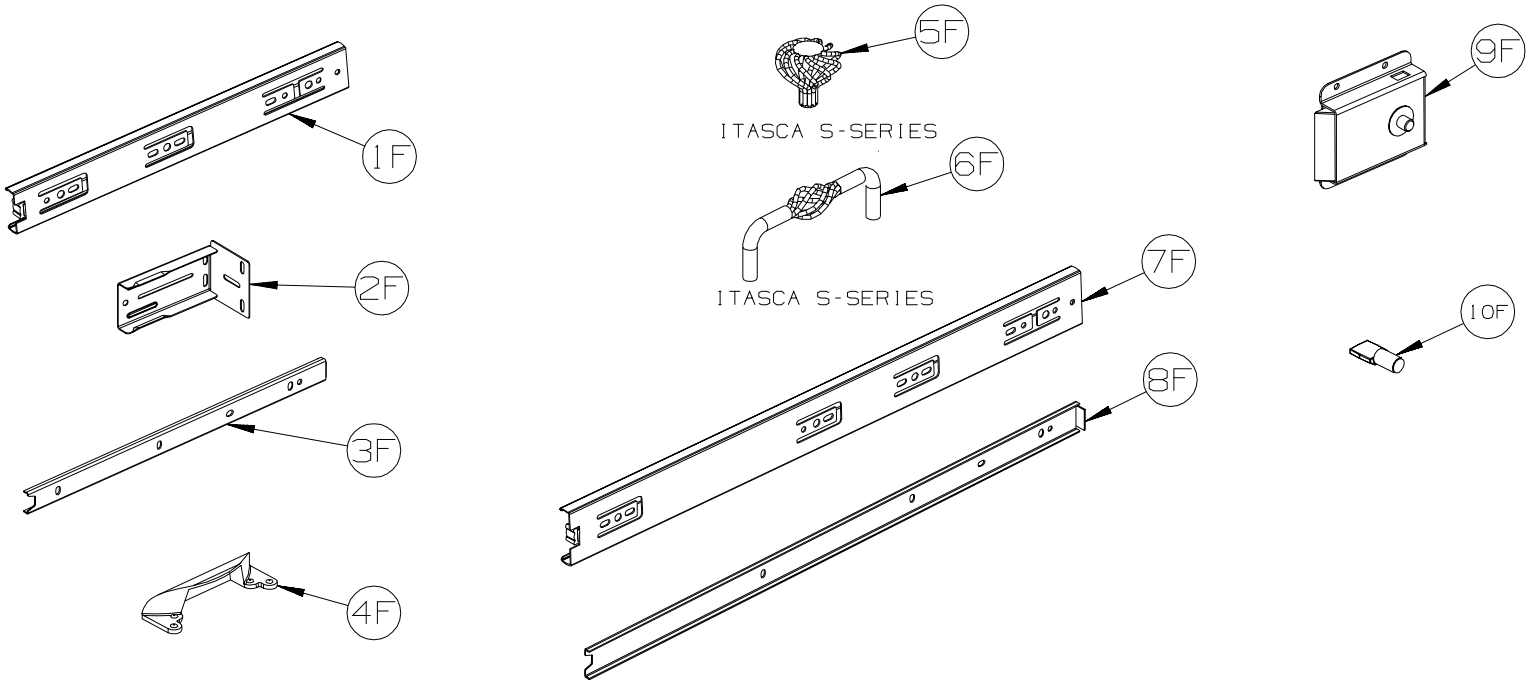

KEY	PART NUMBER	U/M	DESCRIPTION
1F	153000-01-01A	EA	SLIDE - CABINET MOUNT - 11.8"
1F	153000-03-01A	EA	SLIDE - CABINET MOUNT - 13.8"
1F	153000-05-01A	EA	SLIDE - CABINET MOUNT - 15.7"
1F	153000-07-01A	EA	SLIDE - CABINET MOUNT - 17.7"
1F	153000-09-01A	EA	SLIDE - CABINET MOUNT - 19.7"
1F	153000-11-01A	EA	SLIDE - CABINET MOUNT - 21.6"
1F	153000-14-01A	EA	SLIDE - CABINET MOUNT - 23.6"
1F	153000-16-01A	EA	SLIDE - CABINET MOUNT - 7.9"
1F	153000-18-01A	EA	SLIDE - CABINET MOUNT - 9.8"
2F	153000-13-01A	EA	BACKSOCKET - DRAWER SLIDE
3F	153000-02-01A	EA	SLIDE - DRAWER MOUNT - 11.8"
3F	153000-04-01A	EA	SLIDE - DRAWER MOUNT - 13.8"
3F	153000-06-01A	EA	SLIDE - DRAWER MOUNT - 15.7"
3F	153000-08-01A	EA	SLIDE - DRAWER MOUNT - 17.7"
3F	153000-10-01A	EA	SLIDE - DRAWER MOUNT - 19.7"
3F	153000-12-01A	EA	SLIDE - DRAWER MOUNT - 21.6"
3F	153000-15-01A	EA	SLIDE - DRAWER MOUNT - 23.4"
3F	153000-17-01A	EA	SLIDE - DRAWER MOUNT - 7.9"
3F	153000-19-01A	EA	SLIDE - DRAWER MOUNT - 9.8"
4F	153308-01-01A	EA	PULL - VANITY STOOL - SATIN NICKEL
5F	153335-01-01A	EA	PULL - KNOB - DOOR/DRAWER - ANTIQUE PEWTER - HORIZON S-SERIES
6F	153335-02-01A	EA	PULL - DOOR/DRAWER - ANTIQUE PEWTER - HORIZON S-SERIES
7F	153352-01-01A	EA	SLIDE - PANTRY - 19.7" - CABINET MOUNT
8F	153352-02-01A	EA	SLIDE - PANTRY - 19.5" - DRAWER MOUNT
9F	153353-01-01A	EA	LATCH - SLIDING/FLUSH - BLACK
10F	154385-01-01A	EA	PIN - SUPPORT/GLASS DOOR - 1/4" - BRASS
10F	154385-01-02A	EA	PIN - SUPPORT/GLASS DOOR - 1/4" - NICKEL

COPYRIGHT © 2006 WINNEBAGO INDUSTRIES INC.

LABELS GROUP

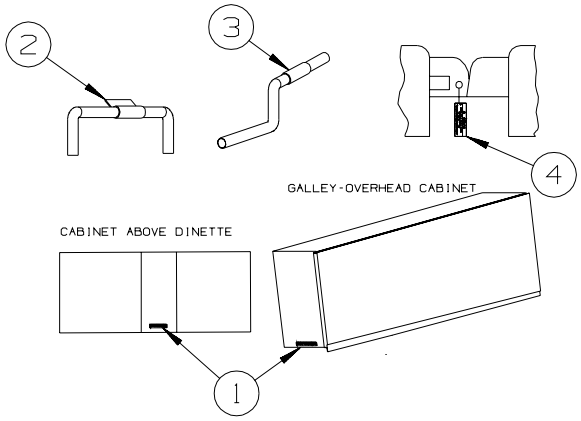

KEY	PART NUMBER	U/M	DESCRIPTION
1	116549-01-000	EA	LABEL - WARNING - SLIDEOUT
2	128658-01-000	EA	LABEL - PROP ROD - ENTRY DOOR
3	126024-01-01A	EA	LABEL - TIRE HANGER REMOVAL
4	126612-01-000	EA	LABEL - HANG TAG - AIR BAG - DASH

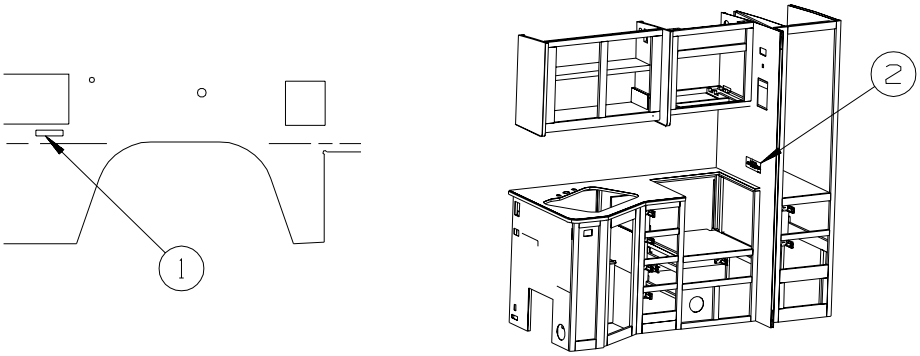

324V/326A

KEY	PART NUMBER	U/M	DESCRIPTION
1	136360-01-01A	EA	LABEL - AIR BAGS
2	143911-01-01A	EA	LABEL - CURTAIN SECUREMENT - BLACK ON CLEAR
2	155196-01-01A	EA	LABEL - CURTAIN SECUREMENT - BLACK ON CLEAR - CSA - CANADIAN

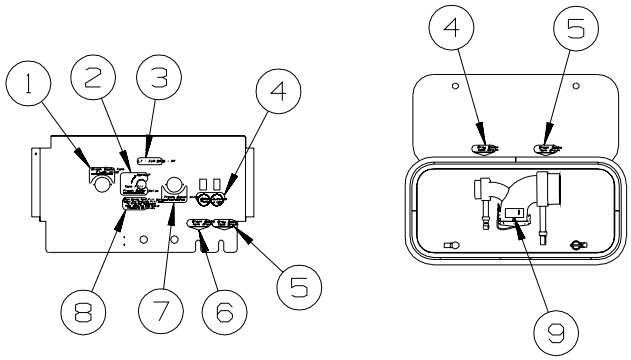

KEY	PART NUMBER	U/M	DESCRIPTION
1	152546-01-01A	EA	LABEL - TANK FLUSH - PANTONE/CLEAR
2	152548-02-01A	EA	LABEL - VALVE/FRESH - PANTONE/CLEAR
3	136360-02-01A	EA	LABEL - AIR BAGS - BLACK/CLEAR
4	152544-02-01A	EA	LABEL - SWITCHES
5	152541-03-01A	EA	LABEL - GRAY WASTE
6	152543-03-01A	EA	LABEL - BLACK WASTE
7	152538-01-01A	EA	LABEL - FRESH WATER - PANTONE/CLEAR
8	154292-01-01A	EA	LABEL - TANK FILL VALVE
9	144649-01-01A	EA	LABEL - ADJUSTABLE VALVE - WHITE ON CLEAR

COPYRIGHT © 2006 WINNEBAGO INDUSTRIES INC.

LABELS GROUP (CONTINUED)

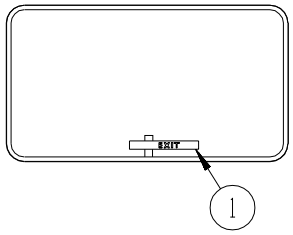

EXIT WINDOW
(POP-OUT STYLE)

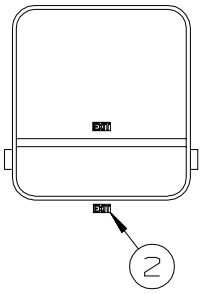

EXIT WINDOW
(HINGE STYLE)

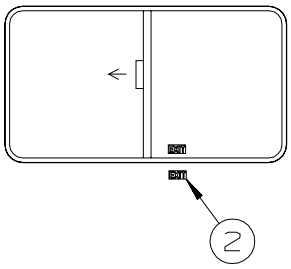

EXIT WINDOW
(SLIDER STYLE)

KEY	PART NUMBER	U/M	DESCRIPTION
1	107571-01-000	EA	LABEL - EXIT/ESCAPE WINDOW
2	039290-01-000	EA	LABEL - WARNING - EXIT

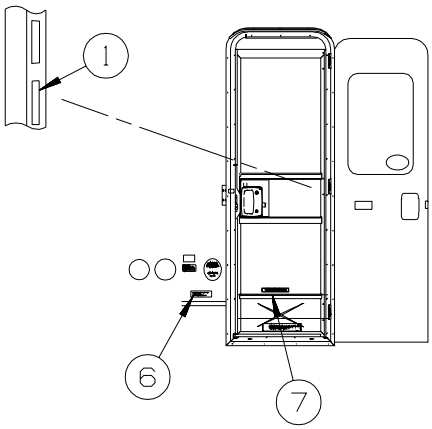

ENTRANCE DOOR

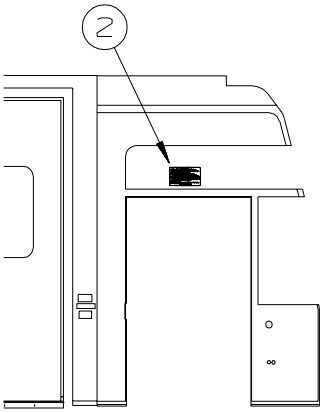

DRIVERS DOOR
(G-SERIES)

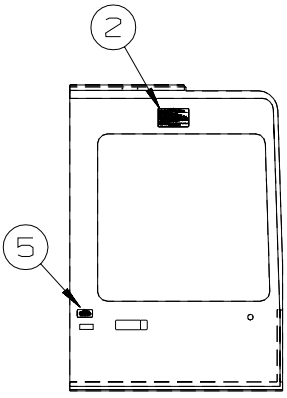

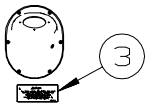

GASOLINE ONLY

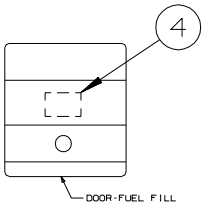

DOOR FUEL FILL
DIESEL ONLY

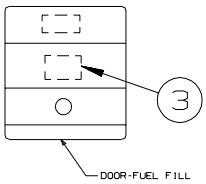

DOOR FUEL FILL
GASOLINE ONLY

KEY	PART NUMBER	U/M	DESCRIPTION
1	135869-01-02A	EA	LABEL - MERCURY CONTENT - WHITE ON CLEAR
1	135869-01-01A	EA	LABEL - MERCURY CONTENT - BLACK 0N CLEAR
2	056259-01-000	EA	LABEL - SAFETY CHECK LIST
3	124519-01-02A	EA	LABEL - WARNING/REFUELING - WHITE ON CLEAR
3	124519-01-01A	EA	LABEL - WARNING/REFUELING - BLACK ON CLEAR
3	124519-02-02A	EA	LABEL - WARNING/REFUELING - WHITE ON CLEAR - CSA - CANADIAN
3	124519-02-01A	EA	LABEL - WARNING/REFUELING - BLACK ON CLEAR - CSA - CANADIAN
4	068383-01-000	EA	LABEL - DIESEL FUEL
5	099689-01-000	EA	LABEL - WARNING - CANCER/TOXICITY
6	099509-01-000	EA	LABEL - AWNING INSTALLATION
7	065748-01-000	EA	LABEL - WARNING - BATTERY CHARGING - UL
7	065748-02-000	EA	LABEL - WARNING - BATTERY CHARGING -CSA - CANADIAN

COPYRIGHT © 2006 WINNEBAGO INDUSTRIES INC.

LABELS GROUP (CONTINUED)

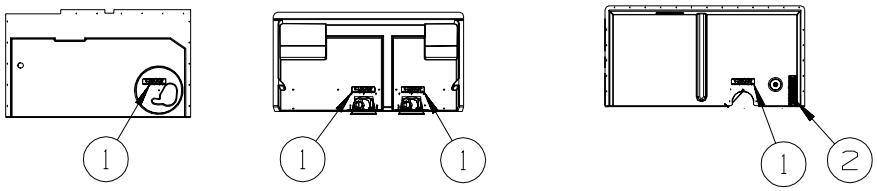

TYPICAL WATER CENTER COMPARTMENTS

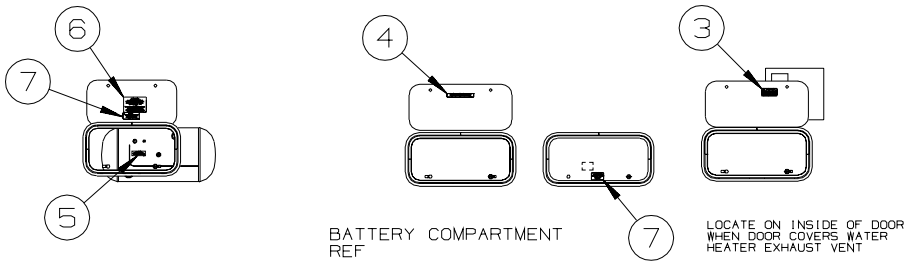

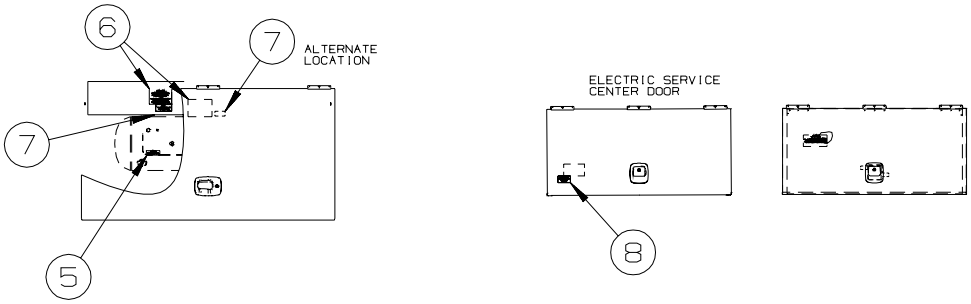

KEY	PART NUMBER	U/M	DESCRIPTION
1	123562-01-000	EA	LABEL - SERVICE/UTILITY ACCESS
2	147845-01-01A	EA	LABEL - DRIP VALVE
3	113402-01-000	EA	LABEL - CAUTION - WATER HEATER EXHAUST
4	065748-01-000	EA	LABEL - WARNING - BATTERY CHARGING - UL
4	065748-02-000	EA	LABEL - WARNING - BATTERY CHARGING - CSA - CANADIAN
5	079965-01-000	EA	LABEL - LPG - 80% CAPACITY
6	124520-01-02A	EA	LABEL - LP GAS ONLY - WHITE ON CLEAR
6	124520-01-01A	EA	LABEL - LP GAS ONLY - BLACK ON CLEAR
6	023769-01-000	EA	LABEL - WARNING - LPG - CANADIAN - CANADIAN
7	124519-01-02A	EA	LABEL - WARNING/REFUELING - WHITE ON CLEAR
7	124519-01-01A	EA	LABEL - WARNING/REFUELING - BLACK ON CLEAR
7	124519-02-02A	EA	LABEL - WARNING/REFUELING - WHITE ON CLEAR - CSA - CANADIAN
7	124519-02-01A	EA	LABEL - WARNING/REFUELING - BLACK ON CLEAR - CSA - CANADIAN
8	125306-01-01A	EA	LABEL - ELECTRICAL ENTRANCE - 110V 30 AMP - BLACK ON CLEAR
8	125306-01-02A	EA	LABEL - ELECTRICAL ENTRANCE - 110V 30 AMP - WHITE ON CLEAR
8	125306-04-01A	EA	LABEL - ELECTRICAL ENTRANCE-120/20V 50 AMP-BLACK ON CLEAR
8	125306-04-02A	EA	LABEL - ELECTRICAL ENTRANCE-120/240V 50 AMP-WHITE ON CLEAR

COPYRIGHT © 2006 WINNEBAGO INDUSTRIES INC.

LABELS GROUP (CONTINUED)

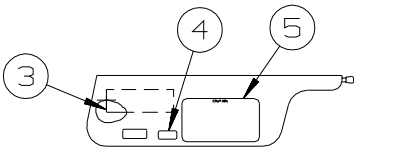

LABELS SHALL BE LOCATED ON OPPOSITE SIDE OF VISOR THAT THE AIR BAG LABEL IS INSTALLED ON

D, F AND C-BODIES

TYPICAL SEAT AND BELT CONFIGURATIONS

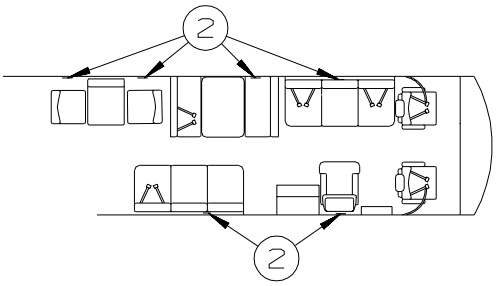

FOLDING CHAIRS

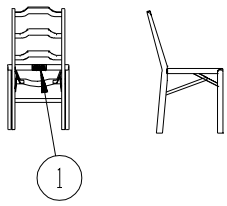

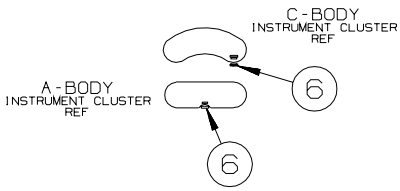

KEY	PART NUMBER	U/M	DESCRIPTION
1	134537-01-01A	EA	LABEL - OCCUPANCY - CHAIR - US
1	134537-02-01A	EA	LABEL - OCCUPANCY - CHAIR - CSA - CANADIAN
2	134538-01-01A	EA	LABEL - OCCUPANCY - NO SEAT BELT - BLACK ON CLEAR - US
2	134538-02-01A	EA	LABEL - OCCUPANCY - NO SEAT BELT - BLACK ON CLEAR - CSA - CANADIAN
3	126611-01-000	EA	LABEL - AIR BAG - VISOR
4	099689-01-000	EA	LABEL - WARNING - CANCER/TOXICITY
5	056259-01-000	EA	LABEL - SAFETY CHECK LIST
6	155692-01-01A	EA	LABEL - ODOMETER - READ IN MILE - BLACK/WHITE
6	155692-01-02A	EA	LABEL - ODOMETER - READ IN MILE - WHITE/CLEAR

COPYRIGHT © 2006 WINNEBAGO INDUSTRIES INC.

LABELS GROUP (CONTINUED)

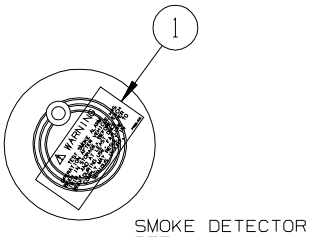

SMOKE DETECTOR
REF

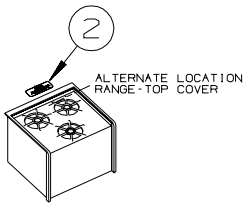

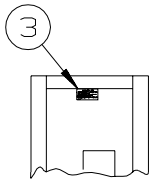

INSIDE OF GALLEY
CABINET DOOR
REF

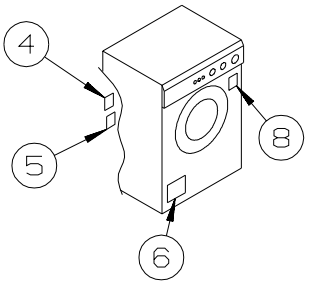

SLIDEOUT SWITCH

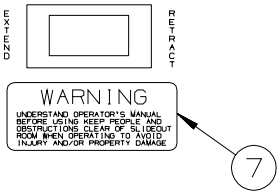

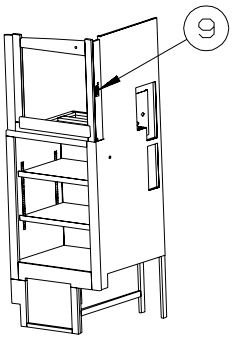

SWING OUT/SLIDING TV INSTL

KEY	PART NUMBER	U/M	DESCRIPTION
1	077956-01-000	EA	LABEL - WARNING/SMOKE DETECTOR
2	134539-01-01A	EA	LABEL - WARNING - STOVE/HEATING - US - BLACK ON CLEAR
2	134540-01-01A	EA	LABEL - WARNING - STOVE/HEATING - CSA - BLACK ON CLEAR - CANADIAN
3	073998-01-000	EA	LABEL - LPG/ODOR WARNING
4	147525-01-000	EA	LABEL - DRYER VENT CUTOUT
5	147524-01-000	EA	LABEL - DRYER VENTING
6	130670-01-01A	EA	LABEL - CAUTION DRYER VENTING - BLACK ON CLEAR - WASHER/DRYER
7	116549-02-000	EA	LABEL - WARNING - SLIDEOUT - 1.18” x 3”
8	153640-01-01A	EA	LABEL - WINTERIZATION - WASHER DRYER - WASHER/DRYER
9	079966-01-000	EA	LABEL - WARNING - STOWED - MOTION

COPYRIGHT © 2006 WINNEBAGO INDUSTRIES INC.

LABELS GROUP (CONTINUED)

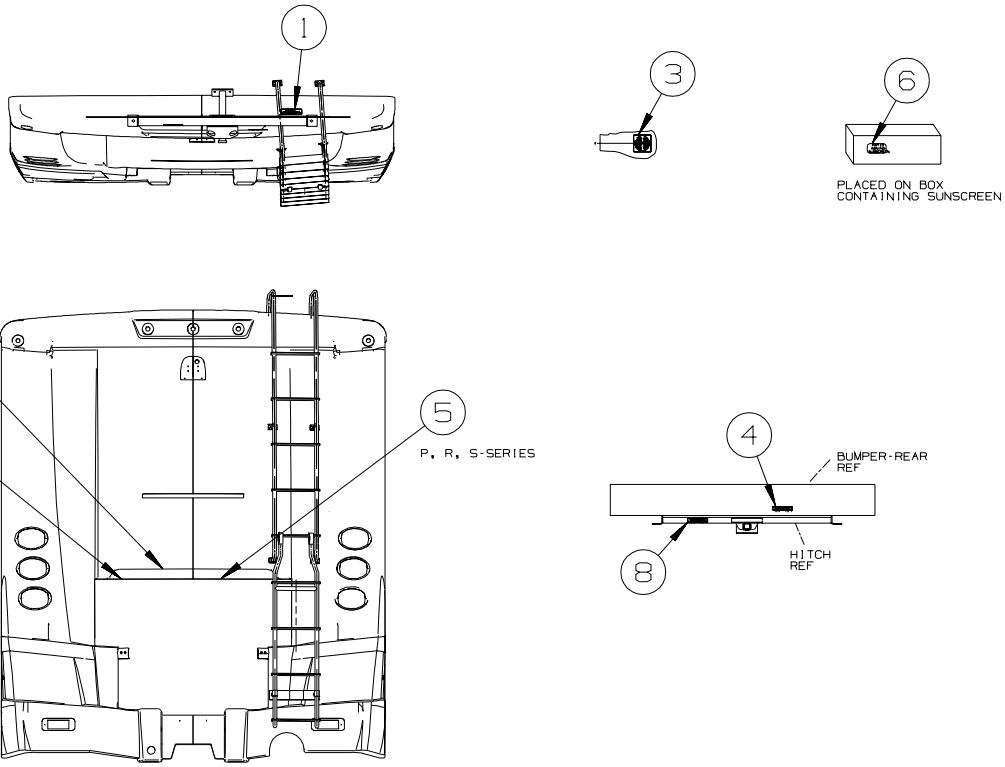

KEY	PART NUMBER	U/M	DESCRIPTION
1	128218-01-01A	EA	LABEL - WARNING - SLIPPERY ROOF
2	116756-03-000	EA	LABEL - WARNING - ETHER/STARTING - RED W/WHITE BACKGROUND
3	120431-01-000	EA	LABEL - LOCATION - COAXIAL CABLE/SATELLITE ANTENNA
4	129669-01-01A	EA	LABEL - HITCH/VEHICLE RATE - 350 - WHITE ON CLEAR - 500 SERIES & F35D ONLY
4	129669-01-02A	EA	LABEL - HITCH/VEHICLE RATE - 350 - BLACK ON CLEAR - 500 SERIES & F35D ONLY
4	129669-02-01A	EA	LABEL - HITCH/VEHICLE RATE - 500 - WHITE ON CLEAR
4	129669-02-02A	EA	LABEL - HITCH/VEHICLE RATE - 500 - BLACK ON CLEAR
5	156213-01-01A	EA	LABEL - CHASSIS BATTERY DISCONNECT - WHITE/BLACK
6	156214-01-01A	EA	LABEL - PATIO AWNING SUNSCREEN - WHITE/BLACK
7	134359-01-01A	EA	LABEL - WARNING - DRIVE BELTS
8	129669-01-01A	EA	LABEL - HITCH/VEHICLE RATE - 350 - WHITE ON CLEAR - 300, 400, 500, 700 SERIES & F35D ONLY
8	129669-01-02A	EA	LABEL - HITCH/VEHICLE RATE - 350 - BLACK ON CLEAR - 300, 400, 500, 700 SERIES & F35D ONLY
8	129669-02-01A	EA	LABEL - HITCH/VEHICLE RATE - 500 - WHITE ON CLEAR
8	129669-02-02A	EA	LABEL - HITCH/VEHICLE RATE - 500 - BLACK ON CLEAR

COPYRIGHT © 2006 WINNEBAGO INDUSTRIES INC.

LP GROUP

LP SYSTEM

KEY	PART NUMBER	U/M	DESCRIPTION
	010323-01-000	EA	ADAPTER - 3/8"F X 1/2"MPT - BRASS
	010326-01-000	EA	ADAPTER - FLARE - W/CONE GASKET - 3/8"F X 1/2"F
	010329-01-000	EA	ADAPTER - 1/2"F X 1/2"MPT - BRASS
	024250-01-000	EA	ADAPTER - BRASS - 3/8"F X 1/2"FPT
	057042-01-000	EA	ADAPTER - CROSS 1/2"PIPE
	010377-02-000	EA	NUT - 3/8" FLARE - FORGED - BRASS
	010380-02-000	EA	NUT - 1/2" FLARE - FORGED - BRASS
	010589-01-000	EA	NIPPLE - PIPE - 1/2" X 1 1/2" - BLACK
	010589-03-000	EA	NIPPLE - PIPE - 1/2" X 2 1/2" - BLACK
	045703-03-000	EA	HOSE - LP - 3/8"ID X 18" - 3/8"MPT X 1/2"F SWIVEL - US
	045703-05-000	EA	HOSE - LP - 3/8"ID X 28" - 3/8"MPT X 1/2"F SWIVEL - US
	045703-06-000	EA	HOSE - LP - 3/8"ID X 28" - 3/8"MPT X 1/2"F SWIVEL - CSA
	045703-12-000	EA	HOSE - LP - 3/8"ID X 18" - 3/8"MPT X 1/2"F SWIVEL - CSA
	045703-15-000	EA	HOSE - LP - 3/8"ID X 142" - 1/2"F SWIVEL X 3/8"F SWIVEL
	040440-02-000	EA	TRANSMITTER - DIAL/BOLT-ON - 0-90 OHM 2 TERM(POWER/GROUND)
	106150-05-000	EA	REGULATOR - TWO STAGE
	144485-01-000	EA	COVER - LP REGULATOR
	111848-02-02B	EA	SHIELD - HEAT - EXHAUST - 322R
	111848-06-02B	EA	SHIELD - HEAT - EXHAUST - E-COATED - 322R
	137828-01-02B	EA	PANEL - ROCKGUARD/LP - E-COATED
	137828-03-02B	EA	PANEL - ROCKGUARD/LP - E-COATED - 325F
	151979-01-02B	EA	PANEL - ROCKGUARD/LP - E-COATED - 327L
			FROM: 00-00-00 THRU: 08-27-05
*	144116-04-000	EA	TANK - LP - 60 LB - 14"D X 29.75"L

***COMPONENT PARTS LISTED LATER IN THIS GROUP**

COMPONENT PARTS FOR LP SYSTEM

144116-04-000

KEY	PART NUMBER	U/M	DESCRIPTION	VENDOR NO.
	040421-01-712	EA	VALVE-SERV. W/O VAPOR RELIEF	V20373/V21202
	040421-01-713	EA	VALVE-RELIEF 1" W/SPRING 7"	V12560/V21207
	144116-01-700	EA	VALVE-OUTAGE(NO STEM REMOVE)	V20058
	144116-01-701	EA	VALVE/FILL 80 % W/YELLOW CAP	V13414
	144116-04-700	EA	FLOAT/SENDING UNIT W/O DIAL	G11530
	144116-04-701	EA	DIAL - TRANSMITER	G12845

COPYRIGHT © 2006 WINNEBAGO INDUSTRIES INC.

SEALANTS & FASTENERS GROUP

SEALANTS & ADHESIVES

KEY	PART NUMBER	U/M	DESCRIPTION
	004001-02-000	EA	GUN - PLEXUS ADHESIVE - W/O NOZZLE
	004001-05-000	EA	ADHESIVE - SCOTCH-WELD - 3M DP100 - CLEAR - 50ML
	004011-01-000	EA	ADHESIVE-3M-4475 TUBE
	010405-02-000	EA	TAPE - THREAD SEALING - 3/8"
	034552-06-000	EA	SILICONE - TUBE - W/NOZZLE - OFF WHITE
	063642-01-000	FT	TAPE - ADHESIVE - .4" X 1.5" X 180'
	064075-07-000	FT	SEAL - BULB - W/WIRED U CHANNEL - .3" X .5" CHANNEL-BLACK
	067788-01-000	EA	ADHESIVE - SPRAY - 3M - 19.5 OZ AEROSOL CAN
	069640-01-000	FT	SEALER - RIBBON - 1/4"DIAMETER X 30 FT - BLACK OR GRAY
	069640-02-000	FT	SEALER - TAPE - 1/8"THICK X 1/2"WIDE X 60 FT - GRAY
	069640-03-000	FT	SEALER - TAPE - 1/8"THICK X 3/4"WIDE X 60 FT - BLACK
	069640-07-000	FT	SEALER - TAPE - 3/32"THICK X 2"WIDE X 45 FT - GRAY
	069640-09-000	FT	SEALER - TAPE - 1/32"THICK X 2 1/2"WIDE X 80 FT - BRT WHT
	069640-10-000	FT	SEALER - TAPE - 1/32"THICK X 1 1/2"WIDE X 90 FT - BRT WHT
	069640-11-000	FT	SEALER - TAPE - 3/16"THICK X 3/8"WIDE X 40 FT - BLACK
	069640-13-000	FT	SEALER - TAPE - 3/32"THICK X 2"WIDE X 45 FT - BLACK
	069640-14-000	FT	SEALER - TAPE - 1/16"THICK X 1"WIDE X 100 FT - BLACK
	069640-15-000	FT	SEALER - TAPE - 1/16"THICK X 3/8"WIDE X 100 FT - BRT WHT
	069640-17-000	FT	SEALER - TAPE - 1/32"THICK X 1"WIDE X 150 FT - GRAY
	069640-18-000	FT	SEALER - TAPE - 1/8"THICK X 1/2"WIDE X 60 FT - BRT WHT
	069640-19-000	FT	SEALER - TAPE - 1/8"THICK X 3/4"WIDE X 60 FT - BRT WHT
	069640-20-000	FT	SEALER - TAPE - 1/8"THICK X 1/2"WIDE X 60 FT - BLACK
	069640-21-000	FT	SEALER - TAPE - 1/16"THICK X 1/2"WIDE X 100 FT - BRT WHT
	069640-22-000	FT	SEALER - TAPE - 1/32"THICK X 1/4"WIDE X 200 FT - BRT WHT
	069640-23-000	FT	SEALER - TAPE - 1/16"THICK X 3/4"WIDE X 100 FT - BRT WHT
	069640-27-000	FT	SEALER - TAPE - 1/16"THICK X 2 1/4"WIDE X 50 FT - BRT WHT
	069640-28-000	FT	SEALER - TAPE - 1/32"THICK X 1 7/8"WIDE X 90 FT - GRAY
	069640-30-000	FT	SEALER - TAPE - 1/32"THICK X 5/8"WIDE X 50 FT - GRAY
	069640-31-000	FT	SEALER - TAPE - 1/4"THICK X 3/4"WIDE X 15 FT - BLACK
	069640-32-000	FT	SEALER - TAPE - 1/16"THICK X 3/8"WIDE X 100 FT - BLACK
	069640-33-000	FT	SEALER - RIBBON - 3/8"DIAMETER X 20 FT - BLACK
	069640-34-000	FT	SEALER - RIBBON - 1/4"DIAMETER X 30 FT - BRIGHT WHITE
	072889-10-000	EA	SEALANT/URETHANE (HV) - TUBE W/NOZZLE TIP - BRIGHT WHITE
	072889-13-000	EA	SEALANT/URETHANE (LV) - TUBE W/NOZZLE TIP - VW WHITE
	072889-28-000	EA	SEALANT/URETHANE-10 OZ TUBE W/NOZZLE-SELF LEVELING-BRT WHT
	076322-01-000	FT	TAPE-DOUBLE COATED/ADHESIVE BK-.03"THK X .8"W X 216'- WHT
	076322-02-000	FT	TAPE-DOUBLE COATED/ADHESIVE BK-.05"THK X 1"W X 108' - WHT
	076322-03-000	FT	TAPE-DOUBLE COATED/ADHESIVE BK-.05"THK X .5"W X 108' - WHT
	076322-05-000	FT	TAPE-DOUBLE COATED/ADHESIVE BK-.05"THK X .8"W X 108' - WHT
	076322-07-000	FT	TAPE-DOUBLE COATED/ADHESIVE BK-.05"THK X .5"W X 200' - BLK
	076322-11-000	FT	TAPE-DOUBLE COATED/ADHESIVE BK-.02"THK X 1"W X 216' - CLR
	076322-13-000	FT	TAPE - FOAM/DOUBLE COATED - .020"THK X .75"W - CLEAR
	076322-21-000	FT	TAPE - FOAM/DOUBLE COATED - .045"THK X .50"W
	076322-22-000	FT	TAPE - FOAM/DOUBLE COATED - .045"THK X .75"W
	076322-23-000	FT	TAPE - FOAM/DOUBLE COATED - .045"THK X 1"W
	076322-25-000	FT	TAPE - FOAM/DOUBLE COATED - .025"THK X .5"W
	086276-01-000	EA	TAPE - DOUBLE SIDED - 1/2" WIDE X 108' LONG (SOLD BY ROLL)
	088479-01-000	EA	TAPE - ALUMINUM - 3"
	090340-01-000	FT	SEAL - FOAM - CLOSED CELL - 1/4" X 1/2" X 50'
	091255-02-000	FT	SEAL - ADHESIVE BACKED/FOAM - 3/64"THICK X 3/16"W X 1000'
	091255-03-000	FT	SEAL - ADHESIVE BACKED/FOAM - 1/4" THICK X 1/4"W X 1000'
	094401-01-000	EA	SEALER - BODY SEAM - FLEXICLEAR
	094401-04-000	EA	SEALER - BODY SEAM - CLEAR
	094401-05-000	EA	SEALER - BODY SEAM - 20OZ BLACK
	094401-06-000	EA	SEALER - BODY SEAM - 12OZ BLACK
	094401-07-000	EA	SEALER - BODY SEAM - CLEAR
	098408-01-000	FT	SEAL - SPONGE RUBBER - CLOSED CELL
	099069-01-000	FT	SEAL - RUBBER - CLOSED SPONGE - .5" WIDE X .12" THICK-BLK
	099418-01-000	FT	SEAL - D-SECTION/ADHESIVE BACK - .44” X .44” - BLK RUBBER
	107828-01-000	EA	SEALANT - SB - 190 EVERSEAL
	108716-02-000	EA	SILICONE - W/NOZZLE - BUFF - SELF LEVELING
	110274-01-000	FT	TAPE - DOUBLE SIDED/FOAM - .45" X 1" X 216' - BLACK
	112864-01-000	FT	SEAL - FOAM/BUTYL COVERED - 3/8" X 35'
	112864-02-000	FT	FOAM - BUTYL COVERED - 5/16" X 44'

COPYRIGHT © 2006 WINNEBAGO INDUSTRIES INC.

SEALANTS & FASTENERS GROUP (CONTINUED)

SEALANTS & ADHESIVES (CONTINUED)

KEY	PART NUMBER	U/M	DESCRIPTION
	112864-04-000	FT	FOAM - BUTYL COVERED - 3/8" X 1/8"
	112901-02-000	EA	ADHESIVE - PLEXUS - MA330 - 50ML - GRAY
	112901-03-000	EA	ADHESIVE - PLEXUS - MA300 - 50ML - WHITE
	112902-01-000	EA	NOZZLE - ELEMENT - 3/8" X 24
	112902-03-000	EA	MIXER NOZZLE - F/GUN #00400102000 - SCOTCH-WELD & PLEXUS
	112902-04-000	EA	NOZZLE - ELEMENT - 1/4" X 3.5"
	112902-05-000	EA	NOZZLE - BAYONET - 3/8" X 18
	112902-06-000	EA	NOZZLE - ELEMENT - 1/2" X 32
	120074-02-03A	EA	SILICONE - TUBE - W/O NOZZLE - LOW ODOR - SMOKEY WHITE
	120534-01-01A	EA	TAPE - SCOTCH - 3M - 1/2" FINE LINE
	123244-01-000	FT	TAPE - DOUBLE SIDED/FOAM - 5/64"THICK X 3/4"WIDE X 108'
	123816-01-000	FT	TAPE - DOUBLE SIDED - 1" X .020" X 200' - CLEAR
	123816-02-000	FT	TAPE - DOUBLE SIDED - 1/2" X .035" X 200' - CLEAR
	123816-03-000	FT	TAPE - DOUBLE SIDED - 1/2" X .020" X 200' - CLEAR
	123816-04-000	FT	TAPE - DOUBLE SIDED - 6" X .0035" X 750' - CLEAR
	123816-06-000	FT	TAPE - DOUBLE SIDED - 3/4" X 3/4" X 200' - CLEAR
	123816-07-000	FT	TAPE - DOUBLE SIDED - 1 3/4" X 200' - CLEAR
	126427-01-000	EA	ADHESIVE - ALL PURPOSE - ABS/PVC
	126427-02-000	EA	PRIMER - CLEANER - FLEX PIPING
	131264-01-11A	EA	SILICONE - TUBE - W/NOZZLE - BEIGE
	131264-01-12A	EA	SILICONE - TUBE - W/NOZZLE - BONE
	131264-02-01A	EA	SILICONE - TUBE - W/NOZZLE - VW GRAY - BATH ONLY
	131264-03-01A	EA	SILICONE - TUBE - W/O NOZZLE - SELF LEVELING -BRIGHT WHITE
	131264-04-01A	EA	SILICONE/SEALANT/ADHESIVE - FAST CURE F/GLASS/VINYL - B/W
	131264-04-02A	EA	SILICONE/SEALANT/ADHESIVE-FAST CURE F/GLASS/VINYL-SOFT WHT
	131264-05-01A	EA	SILICONE/SEALANT - ODORLESS - TUBE - W/NOZZLE - BLACK
	131264-05-02A	EA	SILICONE/SEALANT - ODORLESS - TUBE - W/NOZZLE - CLEAR
	131384-01-000	EA	ADHESIVE - JET WELD - 10 OZ CARTRIDGE
	132892-07-01A	FT	SEAL - BULB/SINGLE - W/U CHANNEL - .5" X 1" - BLACK
	152038-01-01A	EA	TAPE - PRESERVATION SEAL - 2" X 36YD ROLL - BLACK
	154585-01-01A	FT	SEAL - FOAM TAPE - ADHESIVE BACK - 3/8" X 3/8" - GRAY
	154585-02-01A	FT	SEAL - FOAM TAPE - ADHESIVE BACK - 3/4" X 1/2" - GRAY
	154585-03-01A	FT	SEAL - FOAM TAPE - ADHESIVE 2 SIDED - 1/8" X 3/4" - BLACK
	154585-04-01A	FT	SEAL - FOAM TAPE - ADHESIVE BACK - 5/8" X 1/8" - WHITE
	900390-01-000	EA	NOZZLE - SILICONE TUBE - 2.5" LONG - W/EXTERNAL THREADS
	900390-03-000	EA	NOZZLE - SILICONE TUBE - 2 3/4" LONG W/INTERNAL THREADS
	900563-17-000	EA	TAPE - 2 SIDED, 2" X 36 YDS

BOLTS, NUTS AND WASHERS

KEY	PART NUMBER	U/M	DESCRIPTION
	0MD54F-06-000	EA	NUT - HEX W/SERATED FLANGE
	000C12-04-40B	EA	BOLT - HEX - 1/4-20 X 2 1/2 - GRADE #5 ZINC
	000C12-04-20F	EA	BOLT - HEX - 1/4-20 X 1 1/4 - GRADE #5 - STAINLESS STEEL
	000C12-04-12A	EA	BOLT - HEX - 1/4-20 X 3/4 - PLAIN 5
	000C12-05-16B	EA	BOLT - HEX - 5/16 - 18X1 - GRADE #5 - ZINC
	000C12-05-40B	EA	BOLT - HEX - 5/16"-18 X 2.5" - GRADE #5 - ZINC
	000C12-08-44B	EA	BOLT - HEX - 1/2-13 X 2 3/4 - GRADE #5 - ZINC
	000C12-08-24B	EA	BOLT - HEX - 1/2-13 X 1 1/2 - GRADE #5 - ZINC
	000C13-07-40B	EA	BOLT - HEX - 7/16-20 X 2 1/2 - GRADE #5 - ZINC
	000C13-07-72B	EA	BOLT - HEX - 7/16-20 X 4 1/2 - GRADE #5 - ZINC
	000C13-07-48B	EA	BOLT - HEX - 7/16-20 X 3 - GRADE #5 - ZINC
	000C14-07-28B	EA	BOLT - HEX - 7/16-14 X 1 3/4 - GRADE #8 - ZINC
	000C18-05-40A	EA	BOLT - ELEVATOR - 5/16-18 X 2 1/2 - PL
	000C26-04-18B	EA	BOLT - HEX - SERRATED FLANGE - 1/4-20 X 1 1/8 - ZINC
	000C26-04-14B	EA	BOLT - HEX - SERRATED FLANGE - 1/4-20 X 7/8 - ZINC
	000C26-04-12F	EA	BOLT - HEX - SERRATED FLANGE -1/4-20 X 3/4-STAINLESS STEEL
	000C26-04-10B	EA	BOLT - HEX - SERRATED FLANGE - 1/4-20 X 5/8 - ZINC
	000C26-05-12B	EA	BOLT - HEX - SERRATED FLANGE - 5/16-18 X 3/4 - ZINC
	000C26-06-20B	EA	BOLT - HEX - SERRATED FLANGE - 3/8-16 X 1 1/4 - ZINC
	000C26-06-12B	EA	BOLT - HEX - SERRATED FLANGE - 3/8-16 X 3/4 - ZINC
	000C26-06-40B	EA	BOLT - HEX - SERRATED FLANGE - 3/8-16 X 2 1/2 - ZINC
	000C26-06-28B	EA	BOLT - HEX - SERRATED FLANGE - 3/8-16 X 1 3/4 - ZINC
	000C26-08-28B	EA	BOLT - HEX - SERRATED FLANGE - 1/2-13 X 1 3/4 - ZINC
	000C26-08-24B	EA	BOLT - HEX - SERRATED FLANGE - 1/2-13 X 1 1/2 - ZINC

COPYRIGHT © 2006 WINNEBAGO INDUSTRIES INC.

SEALANTS & FASTENERS GROUP (CONTINUED)

BOLTS, NUTS AND WASHERS (CONTINUED)

KEY	PART NUMBER	U/M	DESCRIPTION
	000C27-08-48B	EA	BOLT-CARR 1/2-13X3.00 GR5 - 97 M-SERIES
	000D24-10-00B	EA	NUT - HEX - SELF LOCKING - 10-32 - ZINC
	000D28-10-00B	EA	NUT - HEX - W/NYLON LOCK - 10-32 - ZINC
	000D29-04-00F	EA	NUT - HEX - SELF LOCKING - 1/4 X 20 - STAINLESS STEEL
	000D29-04-00B	EA	NUT - HEX - SELF LOCKING - 1/4 X 20 - ZINC
	000D29-06-00B	EA	NUT - HEX - W/NYLON LOCK - 3/8-16 - ZINC
	000D29-09-00B	EA	NUT - HEX - SELF LOCKING - 9/16-12 - ZINC
	000D34-04-00B	EA	NUT - HEX - LOCKING - 1/4-20 - ZINC
	000D34-06-00B	EA	NUT - HEX - LOCKING - 3/8-16 GRADE C - ZINC
	000D39-04-00B	EA	NUT - HEX - LOCKING W/SERRATED FLANGE - 1/4-20 - ZINC
	000D39-05-00B	EA	NUT - HEX - LOCKING W/SERRATED FLANGE - 5/16-18 - ZINC
	000D39-06-00B	EA	NUT - HEX - LOCKING W/SERRATED FLANGE - 3/8-18 - ZINC
	000D39-07-00B	EA	NUT - HEX - LOCKING W/SERRATED FLANGE - 7/16-14 - ZINC
	000D39-08-00B	EA	NUT - HEX - LOCKING W/SERRATED FLANGE - 1/2-13 - ZINC
	000D44-07-00B	EA	NUT - HEX - LOCKING W/SERRATED FLANGE - 7/16-20 - ZINC
	000D44-08-00B	EA	NUT - HEX - LOCKING W/SERRATED FLANGE - 1/2-20 - ZINC
	000D46-04-00A	EA	NUT - HEX - WELD - 1/4-20 - PLAIN
	000D65-08-00B	EA	NUT - HEX - LOCKING W/SERRATED FLANGE - 8-32 - ZINC
	000D73-08-00C	EA	NUT - HEX FLANGE - 1/2-13
	000D75-09-00B	EA	NUT - HEX LOCKING - 9/16-12 - ZINC
	000D76-06-00B	EA	NUT - HEX FLANGE - 3/8-16
	000E11-04-00F	EA	WASHER - LOCKING - 1/4 MED SPLIT - STAINLESS STEEL
	000E11-07-00B	EA	WASHER - LOCKING - 7/16 MED SPLIT - ZINC
	000E11-08-00B	EA	WASHER - LOCKING - 1/2 MED SPLIT - ZINC
	000E13-17-00B	EA	WASHER - FLAT - 3/8 AR - ZINC
	000E13-18-00B	EA	WASHER - FLAT - 3/8 WIDE - ZINC
	000E13-20-00B	EA	WASHER - FLAT - 7/16 WIDE - ZINC
	000E13-22-00B	EA	WASHER - FLAT - 1/2 WIDE - ZINC
	000E13-26-00B	EA	WASHER - FLAT - 5/8 WIDE - ZINC
	000E14-10-00B	EA	WASHER - LOCKING - #10 EXTERNAL TOOTH - ZINC
	000E16-10-00B	EA	WASHER - HARDENED - 5/8 - FLAT - ZINC
	005081-01-000	EA	NUT - SPEED - C-TYPE - #8 SCREW
	039715-01-000	EA	NUT-SERT - 1/4" DIAMETER - 20 THREADS
	040921-01-000	EA	NUT - SPEED - U TYPE - #10-24 - BLACK
	040921-03-000	EA	NUT - SPEED - U TYPE - #10
	040921-04-000	EA	NUT - SPEED - U TYPE - #8-.59" LENGTH X .44" WIDTH
	040921-05-000	EA	NUT - SPEED - U-TYPE - 8-.67" X .44" WIDE
	041322-01-000	EA	WASHER - FLANGE - 15/32"ID X 2 3/8"OD - F/SEAT BELT MTG
	044364-02-000	EA	NUT - SPEED - FLAT - ROUND
	044533-01-000	EA	WASHER - 1 3/8"OD - FOR BUTTONS - PLASTIC
	051387-06-000	EA	BOLT - CARRIAGE W/O HOLE - 5/16-18 X 9 1/2 - ZINC
	058716-02-000	EA	WASHER - FLAT NYLON
	064081-03-000	EA	NUT - WING 3/8-16 - W/WELD NUT
	077071-01-000	EA	WASHER - FENDER - 3/16"ID X 1"OD
	087234-01-000	EA	NUT - JACK - 1/4 X 20 THD - MOLLY
	088787-12-000	EA	STUD - WELD - 1/4 - 20 X 1.0 LG - MN
	102333-01-06A	EA	BOLT - CARRIAGE - 7/16-14 STAINLESS STEEL CAP
	102540-02-000	EA	SEAL - SCREW
	106956-03-000	EA	BOLT - HEX TAP - 1/2-13NC X 3 - GRADE 5 - FULL THREAD/ZINC
	106956-10-000	EA	BOLT - HEX TAP - 9/16-12NC X 3 5/8 -GRD 5-FULL THREAD/ZINC
	106956-11-000	EA	BOLT - HEX TAP - 1/2-13NC X 2 1/2 - GRD 5-FULL THREAD/ZINC
	107397-01-000	EA	WASHER - FENDER - 3/4"ID X 1"OD
	108067-03-000	EA	STUD - WELD - 1/4 - 20 X 1/2 CD
	109917-03-000	EA	WASHER - 1" X .50"
	109917-04-000	EA	WASHER - 1" X .75"
	128444-01-000	EA	WASHER - SPRING - CONICAL
	135092-02-01A	EA	BOLT - HEX - SERRATED FLANGE - 1/2-20 X 2 1/2-GRADE 5 ZINC
	135092-05-01A	EA	BOLT - HEX - SERRATED FLANGE - 1/2-20 X 1 - GRADE 5 ZINC
	143399-01-01A	EA	NUT/RETAINING - 3/8"- 24 NFT
	144904-01-01A	EA	BOLT - ADJUSTMENT - HEADLAMP
	147284-02-000	EA	NUT/SELF RETAINING - 5/16"-18
	148817-01-000	EA	WASHER/SPUR - LOCKING

COPYRIGHT © 2006 WINNEBAGO INDUSTRIES INC.

SEALANTS & FASTENERS GROUP (CONTINUED)

SCREWS

KEY	PART NUMBER	U/M	DESCRIPTION
	0G1208-12-170	EA	SCREW - 8-18 X 3/4 POH - BRIGHT WHITE
	0G3908-08-170	EA	SCREW - SF/DR - 8-18 X 1/2 PPH - BRIGHT WHITE
	0G3908-08-410	EA	SCREW - SF/DR - 8-18 X 1/2 PPH - PARCHMENT
	0G3908-12-250	EA	SCREW - SF/DR - 8-18 X 3/4 PPH - DARK GRAY
	0G3908-16-170	EA	SCREW - SF/DR - 8-18 X 1 PPH - BRIGHT WHITE
	0G3908-24-170	EA	SCREW - SF/DR - 8-18 X 1 1/2 PPH - BRIGHT WHITE
	0G3910-12-170	EA	SCREW - SF/DR - 10-16 X 3/4 PPH - BRIGHT WHITE
	0G3910-12-380	EA	SCREW - SF/DR - 10-16 X .75 PPH - CASHMERE
	0G3910-12-370	EA	SCREW - SF/DR - 10-16 X .75 PPH - RIVERSTONE
	0G3910-24-170	EA	SCREW - SF/DR - 10-16 X 1 1/2 PPH - BRIGHT WHITE
	0G3910-32-330	EA	SCREW - SF/DR - 10-16 X 2.00 PPH - PUTTY
	0G5508-08-380	EA	SCREW - SF/DR - 8-18 X .5 PWH - CASHMERE
	0G5508-08-370	EA	SCREW - SF/DR - 8-18 X .5 PWH - RIVERSTONE
	0G5508-12-320	EA	SCREW - SF/DR - 8-18 X 3/4 PWH - GLACIER
	0G5508-12-170	EA	SCREW - SF/DR - 8-18 X 3/4 PWH - BRIGHT WHITE
	0G5508-12-330	EA	SCREW - SF/DR - 8-18 X 3/4 PWH - PUTTY
	0G5508-16-370	EA	SCREW - SF/DR - 8-18 X 1 PWH - RIVERSTONE
	0G5508-16-330	EA	SCREW - SF/DR - 8-18 X 1 PWH - PUTTY
	0G5508-16-250	EA	SCREW - SF/DR - 8-18 X 1 PWH - VW DARK GRAY
	0G5508-16-380	EA	SCREW - SF/DR - 8-18 X 1 PWH - CASHMERE
	0G6008-16-170	EA	SCREW - SF/DR - 8-18 X 1 POH - BRIGHT WHITE
	0G6012-32-170	EA	SCREW - SF/DR - 12-14 X 2 POH - BRIGHT WHITE
	0G6710-08-170	EA	SCREW - 10-12 X 1/2 PPH - BRIGHT WHITE
	0G6710-12-170	EA	SCREW - 10-12 X 3/4 PPH - BRIGHT WHITE
	0G6806-16-170	EA	SCREW - 6-18 X 1 POH - BRIGHT WHITE
	0G6810-24-280	EA	SCREW - 10-12 X 1 1/2 POH - SOFT WHITE
	000C20-06-24T	EA	SCREW - 3/8-16 X 1 1/2 - FLAT SOCKET
	000C28-05-24D	EA	CAPSCREW/BUTTON HEAD - 5/16-18 X 1 1/2 - #8-BLK PHOSPHATE
	000G11-06-08B	EA	SCREW - 6-20 X 1/2 PPH - ZINC
	000G11-06-10B	EA	SCREW - 6-20 X 5/8 PPH - ZINC
	000G11-06-10J	EA	SCREW - 6-20 X 5/8 PPH - BRASS
	000G11-07-08B	EA	SCREW - 7-19 X 1/2 PPH - ZINC
	000G11-08-12B	EA	SCREW - 8-18 X 3/4 PPH - ZINC
	000G11-08-06B	EA	SCREW - 8-18 X 3/8 PPH - ZINC
	000G11-08-08T	EA	SCREW - 8-18 X 1/2 PPH - FLUOROCARBON COATING
	000G11-08-12B	EA	SCREW - 8-18 X 3/4 PPH - ZINC
	000G11-08-12P	EA	SCREW - 8-18 X 3/4 PPH - DARK BROWN
	000G11-08-12S	EA	SCREW - 8-18 X 3/4 PPH - OFF WHITE
	000G11-08-12T	EA	SCREW - 8-18 X 3/4 PPH - BLACK MAGNESIUM
	000G11-08-20B	EA	SCREW - 8-18 X 1 1/4 PPH - ZINC
	000G11-08-20G	EA	SCREW - 8-18 X 1 1/4 - ANTIQUE BRASS
	000G11-10-12D	EA	SCREW - 10-16 X 3/4 PPH - BLACK
	000G12-06-12J	EA	SCREW - 6-20 X .75 POH - BRASS
	000G12-06-08T	EA	SCREW - 6-20 X 1/2 POH - BLACK
	000G12-10-16F	EA	SCREW - 10-16 X 1 POH - STAINLESS STEEL
	000G13-05-10B	EA	SCREW - 5-12 X 5/8 PFH - ZINC
	000G13-06-08B	EA	SCREW - 6-20 X 1/2 PFH - ZINC
	000G13-06-08G	EA	SCREW - 6-20 X 1/2 PFH - ANTIQUE BRASS
	000G13-06-10B	EA	SCREW - 6-20 X 5/8 PFH - ZINC
	000G13-06-10G	EA	SCREW - 6-20 X 5/8 PFH - ANTIQUE BRASS
	000G13-06-16J	EA	SCREW - 6-20 X 1 PFH - BRASS
	000G13-06-169	EA	SCREW - SF/DR - 6-20 X 1 PFH - SILVER
	000G13-06-24J	EA	SCREW - 6-20 X 1 1/2 PFH - BRASS
	000G13-07-10H	EA	SCREW - 7-19 X 5/8 PFH - BLACK
	000G13-07-12B	EA	SCREW - 7-19 X 3/4 PFH - ZINC
	000G13-08-16B	EA	SCREW - 8-18 X 1 PFH - ZINC
	000G13-08-109	EA	SCREW - 8-18 X 5/8 PFH
	000G13-08-10B	EA	SCREW - 8-18 X 5/8 PFH - ZINC
	000G13-08-24B	EA	SCREW - 8-18 X 1 1/2 PFH - ZINC
	000G16-04-24B	EA	SCREW - MACHINE - 1/4-20 X 1 1/2 PPH
	000G18-08-12B	EA	SCREW - MACHINE - 8-32 X 3/4 PPH - ZINC
	000G18-08-16B	EA	SCREW - MACHINE - 8-32 X 1 PPH - ZINC
	000G18-08-22B	EA	SCREW - MACHINE - 8-32 X 1 3/8 PPH - ZINC
	000G18-08-24B	EA	SCREW - MACHINE - 8-32 X 1 1/2 PPH - ZINC

COPYRIGHT © 2006 WINNEBAGO INDUSTRIES INC.

SEALANTS & FASTENERS GROUP (CONTINUED)

SCREWS (CONTINUED)

KEY	PART NUMBER	U/M	DESCRIPTION
	000G19-10-10B	EA	SCREW - MACHINE - 10-32 X 5/8 - PPH - ZINC
	000G19-10-08B	EA	SCREW - MACHINE - 10-32 X 1/2 PPH - ZINC
	000G19-10-20B	EA	SCREW - MACHINE - 10-32 X 1 1/2 PPH - ZINC
	000G19-10-12F	EA	SCREW - MACHINE - 10-32 X 3/4 PPH - STAINLESS STEEL
	000G36-10-12T	EA	SCREW - 10-24X 3/4 PFH TYPE 23 - BLACK
	000G39-06-10T	EA	SCREW - SF/DR - 6-20 X 5/8 PPH - BLACK
	000G39-06-16T	EA	SCREW - SF/DR - 6-20 X 1 PPH - BLACK
	000G39-08-06B	EA	SCREW - SF/DR - 8-18 X 3/8 PPH - ZINC
	000G39-08-08B	EA	SCREW - SF/DR - 8-18 X 1/2 PPH - ZINC
	000G39-08-08S	EA	SCREW - SF/DR - 8-18 X 1/2 PPH - OFF WHITE
	000G39-08-08T	EA	SCREW - SF/DR - 8-18 X 1/2 PPH - BLACK
	000G39-08-12T	EA	SCREW - SF/DR - 8-18 X 3/4 PPH - BLACK
	000G39-08-16B	EA	SCREW - SF/DR - 8-18 X 1 PPH - ZINC
	000G39-08-16S	EA	SCREW - SF/DR - 8-18 X 1 PPH - OFF WHITE
	000G39-08-16T	EA	SCREW - SF/DR - 8-18 X 1 PPH - BLACK
	000G39-08-24B	EA	SCREW - SF/DR - 8-18 X 1 1/2 PPH - ZINC
	000G39-08-24S	EA	SCREW - SF/DR - 8-18 X 1 1/2 - OFF WHITE
	000G39-08-24T	EA	SCREW - SF/DR - 8-18 X 1 1/2 PPH - BLACK
	000G39-08-32B	EA	SCREW - SF/DR - 8-18 X 2 PPH - ZINC
	000G39-10-10B	EA	SCREW - SF/DR - 10-16 X 5/8 PPH - ZINC
	000G39-10-12B	EA	SCREW - SF/DR - 10-16 X 3/4 PPH - ZINC
	000G39-10-08B	EA	SCREW - SF/DR - 10-16 X 1/2 PPH - ZINC
	000G39-10-48T	EA	SCREW - SF/DR - 10-16 X 3 PPH - BLACK
	000G39-10-48B	EA	SCREW - SF/DR - 10-16 X 3 - PPH - ZINC
	000G39-10-129	EA	SCREW - SF/DR - 10-16 X 3/4 PPH - FLUOROCARBON SILVER
	000G39-10-169	EA	SCREW - SF/DR - 10-16 X 1 PPH - FLU0R0CARBON SILVER
	000G39-10-32B	EA	SCREW - SF/DR - 10-16 X 2 - PPH - ZINC
	000G39-10-28T	EA	SCREW - SF/DR - 10-16 X 1 3/4" PPH - BLACK
	000G39-10-24T	EA	SCREW - SF/DR - 10-16 X 1 1/2" PPH - BLACK
	000G39-10-20T	EA	SCREW - SF/DR - 10-16 X 1 1/4 PPH - BLACK
	000G39-10-20B	EA	SCREW - SF/DR - 10-16 X 1 1/4 PPH - ZINC
	000G42-04-24B	EA	SCREW - SF/DR - 1/4-14 X 1 1/2 - ZINC
	000G42-04-16B	EA	SCREW - SF/DR - 1/4-14 X 1 HWH - ZINC
	000G52-06-05B	EA	SCREW - MACHINE - 6-32 X 5/16 PTH - ZINC
	000G52-06-06B	EA	SCREW - MACHINE - 6-32 X 3/8 PTH - ZINC
	000G54-04-14B	EA	SCREW - 1/4-20 X 7/8 PTH - TYPE 23 - ZINC PLATED
	000G55-08-16T	EA	SCREW - SF/DR - 8-18 X 1 PWH - BLACK
	000G55-08-124	EA	SCREW - SF/DR - 8-18 X 3/4 PWH - ASH GRAY
	000G56-12-48B	EA	SCREW - WOOD - 12-11 X 3 POH - SPECIAL HARDENED
	000G60-08-22B	EA	SCREW - SF/DR - 8-18 X 1.38 POH - ZINC
	000G60-08-20F	EA	SCREW - SF/DR - 8-19X1.25 POH
	000G60-08-16E	EA	SCREW - SF/DR - 8-1 X 1 POH - CHROME
	000G60-10-16J	EA	SCREW - SF/DR - 10-16 X 1 POH - BRIGHT BRASS
	000G60-10-28T	EA	SCREW - SF/DR - 10-16 X 1 3/4 - BLACK
	000G60-10-209	EA	SCREW - SF/DR - 10-16 X 1 1/4 POH - SILVER STALGAARD
	000G60-10-20B	EA	SCREW - SF/DR - 10-16 X 1 1/4 POH - ZINC
	000G62-06-249	EA	SCREW - SF/DR - 8-18 X 1.5 PPH - SILVER
	000G62-08-24B	EA	SCREW - SF/DR - 8-18 X 1 1/2 PFH
	000G67-08-32B	EA	SCREW - 8-15 X 2 PPH - ZINC
	000G67-10-08B	EA	SCREW - 10-12 X 1/2 PPH - ZINC
	000G67-10-08S	EA	SCREW - 10-12 X 1/2 PPH - OFF WHITE
	000G67-10-10B	EA	SCREW - 10-12 X 5/8 PPH - ZINC - TYPE A
	000G67-10-10P	EA	SCREW - 10-12 X 5/8 PPH - DARK BROWN
	000G67-10-10S	EA	SCREW - 10-12 X 5/8 PPH - OFF WHITE
	000G67-10-10T	EA	SCREW - 10-12 X 5/8 PPH - BLACK
	000G67-10-12P	EA	SCREW - 10-12 X 3/4 PPH - DARK BROWN
	000G67-10-24B	EA	SCREW - 10-12 X 1 1/2 PPH - ZINC
	000G67-10-24S	EA	SCREW - 10-12 X 1 1/2 PPH - OFF WHITE
	000G67-10-32J	EA	SCREW-10-12X2 PPH - BRIGHT BRASS
	000G68-06-10J	EA	SCREW - 6-18 X 5/8 POH - BRASS
	000G68-06-12S	EA	SCREW - 6-18 X 3/4 POH
	000G68-06-12J	EA	SCREW - 6-18 X 3/4 POH - BRASS
	000G68-06-12B	EA	SCREW - 6-18 X 3/4 POH - ZINC & CLEAR
	029130-01-000	EA	SCREW - SNAP STUD - #8-16 X 5/8" LONG

COPYRIGHT © 2006 WINNEBAGO INDUSTRIES INC.

SEALANTS & FASTENERS GROUP (CONTINUED)

SCREWS (CONTINUED)

KEY	PART NUMBER	U/M	DESCRIPTION
	029130-03-000	EA	SCREW - SNAP STUD - #8-16 X 1" LONG
	049465-01-000	EA	SCREW - 10-16 PTH W/WASHER - DARK BROWN
	049465-03-000	EA	SCREW - 10-16 X 1 POH W/WASHER - OFF WHITE
	049465-13-000	EA	SCREW-10+16X1 PTH W/WASHER - *ASH GRAY
	049465-17-000	EA	SCREW - 10-16 X 1 POH W/WASHER - BRIGHT WHITE
	049465-22-000	EA	SCREW - 10-16 X 1 1/2 POH W/WASHER - SABLE
	054434-02-000	EA	SCREW - SF/DR - 10-16 X 2 - ZINC
	054434-03-000	EA	SCREW - SF/DR - 10-16 X 2 - PWH - ZINC
	075908-01-000	EA	SCREW - MACHINE - 10-32 X .56 PTH - EXTERNAL TOOTH - ZINC
	076790-01-000	EA	SCREW - 6-20 X 1 1/4 PPH - BLACK
	076790-05-000	EA	SCREW - 6-20 X 1/2 PPH - BLACK - THREAD CUTTING/WOOD
	083554-01-000	EA	SCREW - DRYWALL - 8 X 1 1/4
	083554-04-000	EA	SCREW - DRYWALL - 8 X 2 1/2
	087721-01-000	EA	SCREW - FLAT HEAD - TAPPING - 1/4" X 1 1/4" LONG - ZINC
	097974-01-000	EA	SCREW - PARTICLE BOARD - 7-9 X 3/4 PPH
	097974-02-000	EA	SCREW-PART BD 8-9X.75 PFH - BEIGE
	101618-01-000	EA	SCREW - 1/4-20 X 3/4 HEX - TAPPING - STALGARD TYPE F
	113563-01-01A	EA	SCREW - 8 X 5/8 LONG SHOULDER/WASHER HEAD
	118383-01-04A	EA	RETAINER/RECESSED - F/.22" SCREW - BRIGHT WHITE
	118383-01-09A	EA	RETAINER/RECESSED - F/.22" SCREW - GLACIER
	118383-01-12A	EA	RETAINER/RECESSED - F/.22" SCREW - RIVERSTONE
	118383-01-11A	EA	RETAINER/RECESSED - F/.22" SCREW - CASHMERE
	118383-01-10A	EA	RETAINER/RECESSED - F/.22" SCREW - STORM GRAY
	118383-02-10A	EA	RETAINER/RECESSED - F/.27" SCREW - RIVERSTONE
	118383-02-13A	EA	RETAINER/RECESSED - F/.27" SCREW - OFF WHITE
	118383-02-11A	EA	RETAINER/RECESSED - F/.27" SCREW - CASHMERE
	118383-03-09A	EA	RETAINER/RECESSED - F/.32" SCREW - GLACIER
	118383-04-04A	EA	CAP - F/RECESSED RETAINER - BRIGHT WHITE
	118383-04-12A	EA	CAP - F/RECESSED RETAINER - STORM GRAY
	118383-04-11A	EA	CAP - F/RECESSED RETAINER - CASHMERE
	118383-04-10A	EA	CAP - F/RECESSED RETAINER - RIVERSTONE
	118383-04-09A	EA	CAP - F/RECESSED RETAINER - GLACIER
	118383-04-13A	EA	CAP - F/RECESSED RETAINER - OFF WHITE
	134126-01-01A	EA	SCREW/NAIL - HEX HEAD - 3/4"
	140040-01-000	EA	SCREW - 1/4-20 X 1 - BUTTON HEAD/SOCKET - W/LOCTITE
	149753-01-02A	EA	RETAINER/RECESSED - F/.22" SCREW - BRIGHT WHITE
	149753-01-02A	EA	RETAINER/RECESSED - F/.22" SCREW - BRIGHT WHITE
	149753-01-01A	EA	RETAINER/RECESSED - F/.22" SCREW - BLACK
	149753-02-02A	EA	CAP - F/RECESSED RETAINER - BRIGHT WHITE
	149753-02-01A	EA	CAP - F/RECESSED RETAINER - BLACK
	154938-01-02A	EA	SCREW - SF/DR - 10-16 X 3/4 PPH - W/SELF SEAL - BLACK
	154938-01-01A	EA	SCREW - SF/DR - 10-16 X 3/4 PPH - W/SELF SEAL-BRIGHT WHITE
	154938-02-03A	EA	SCREW - SF/DR - 8-18 X 1 PFH - W/SELF SEAL - SILVER
	154938-02-01A	EA	SCREW - SF/DR - 8-18 X 1 PFH - W/SELF SEAL - BRIGHT WHITE

CLAMPS, CLIPS, GROMMETS, RIVETS & PLUGS

KEY	PART NUMBER	U/M	DESCRIPTION
	000H14-06-06R	EA	RIVET-MANDREL BLIND,3/16 AL - CHERRY BSP-66
	000H16-04-06R	EA	RIVET - POP ALUMINUM - 1/8 X .313 - .375
	000H16-06-10R	EA	RIVET - POP ALUMINUM - 3/16 X .501 - .625
	007161-01-000	EA	CLAMP - HOSE - SPRING TYPE - 1/2"
	008386-01-000	EA	GROMMET - SNAP - 3/8" DIAMETER - NYLON
	010495-01-000	EA	CLAMP - CABLE - 9/16"ID - BLACK
	010495-02-000	EA	CLAMP - CABLE - 3/8"ID - BLACK
	010495-04-000	EA	CLAMP - CABLE - 11/16"ID - WHITE
	010497-01-000	EA	CLAMP - CLOSED - 5/8"ID
	010497-02-000	EA	CLAMP - CLOSED - 1.5"ID
	010497-03-000	EA	CLAMP - CLOSED - 1"ID - CUSHIONED
	010497-04-000	EA	CLAMP - CLOSED - 1 5/8"ID
	010497-05-000	EA	CLAMP - CLOSED - 1/2"ID
	010497-07-000	EA	CLAMP - CLOSED - 3/8"ID
	010497-10-000	EA	CLAMP - CLOSED - 7/8"ID
	010499-01-000	EA	CLAMP - CLOSED - 3/8"ID
	016188-03-000	EA	GROMMET - LP LINE - 3/8"HOLE X 2 1/2"LONG - RUBBER

COPYRIGHT © 2006 WINNEBAGO INDUSTRIES INC.

SEALANTS & FASTENERS GROUP (CONTINUED)

CLAMPS, CLIPS, GROMMETS, RIVETS & PLUGS (CONTINUED)

KEY	PART NUMBER	U/M	DESCRIPTION
	016188-04-000	EA	GROMMET - LP LINE - 1/2"HOLE X 2 1/2"LONG - RUBBER
	016188-05-000	EA	GROMMET - LP LINE - 3/8"HOLE X 1 1/4"LONG - RUBBER
	016188-06-000	EA	GROMMET - LP LINE - 3/8"HOLE X 3 1/4"LONG - RUBBER
	016188-07-000	EA	GROMMET - L/P LINE - 1/2"HOLE X 3 1/4"LONG
	016188-08-000	EA	GROMMET - LP LINE - 1/2"HOLE X 1 1/4"LONG - RUBBER
	016188-09-000	EA	GROMMET - LP LINE - .68"HOLE X 1 1/4"LONG - RUBBER
	016188-10-000	EA	GROMMET - LP GAS - .68" X 2.5"
	023942-01-000	EA	GROMMET - RUBBER - 2"OD
	061420-04-000	EA	PLUG/PLASTIC - 1 1/4" DIAMETER
	061420-05-000	EA	PLUG/PLASTIC - 1 1/2" DIAMETER
	061420-09-000	EA	PLUG/PLASTIC - 1.00" DIAMETER
	061420-12-000	EA	PLUG/PLASTIC - 1.50" DIAMETER - RED
	061420-13-000	EA	PLUG/PLASTIC - 3/8" - FLUSH
	061420-14-000	EA	PLUG/PLASTIC - 7/8" DIAMETER - BLACK
	061420-15-000	EA	PLUG/PLASTIC - 2" DIAMETER - BLACK
	061420-16-000	EA	PLUG/PLASTIC - 2 1/8" DIAMETER - BLACK
	062401-01-000	EA	CLAMP - HOSE - WORMGEAR - .25" - 1"
	062401-02-000	EA	CLAMP - HOSE - WORMGEAR - 1.56" - 2.5" ID
	062401-03-000	EA	CLAMP - HOSE - WORMGEAR - .22" - 1" ID
	062401-04-000	EA	CLAMP - HOSE - WORMGEAR - .69" - 1.25" ID
	062401-05-000	EA	CLAMP - HOSE - WORMGEAR - 2" - 3" ID
	062401-06-000	EA	CLAMP - HOSE - WORMGEAR - .22" - .62" ID
	062401-09-000	EA	CLAMP - HOSE - WORMGEAR - 2.8" - 3.75" ID
	062401-11-000	EA	CLAMP - HOSE - WORMGEAR - 3.50" - 4.50" ID
	062401-13-000	EA	CLAMP - HOSE - WORMGEAR
	071015-01-000	EA	GROMMET - RUBBER - .5"ID X 1"OD-W/.38" GROOVE - BLACK
	071015-22-000	EA	GROMMET - RUBBER - .62"ID X 1.12"OD W/.19" GROOVE - BLACK
	071015-26-000	EA	GROMMET - RUBBER - 1.5"ID X 2.1"OD W/.06" GROOVE - BLACK
	071015-29-000	EA	GROMMET - RUBBER - .3"ID X 1.3"OD W/.12" GROOVE - BLACK
	071015-30-000	EA	GROMMET - RUBBER - .3"ID X .81"OD W/.12" GROOVE - BLACK
	071015-37-000	EA	GROMMET - .81 ID FITS .56 MTL
	071015-39-000	EA	GROMMET - .75 ID FITS .06 MTL
	071015-41-000	EA	GROMMET - .125 ID FITS .188 MTL
	071015-42-000	EA	GROMMET - .25 ID FITS .06 MTL
	075148-02-000	EA	CLAMP - GROUNDING - BRONZE SCREWS
	077955-01-000	EA	CLIP/J - 3/8" - VINYL COATED
	080734-02-000	EA	CLIP - WIRE NYLON
	081211-01-000	EA	PLUG - PLASTIC - .31"DIA - BLACK
	081211-03-000	EA	PLUG - PLASTIC - .50"DIAMETER - TRUSS HEAD - BLACK
	081211-04-000	EA	PLUG - PLASTIC - .46"DIAMETER - TRUSS HEAD - BLACK
	083609-01-000	EA	CLAMP - WIRE - DUAL - EQUAL DIAMETERS - 5/8"
	083610-01-000	EA	CLAMP - WIRE - DUAL - UNEQUAL DIAMETERS - 3/4" & 1 1/4"
	083610-02-000	EA	CLAMP - WIRE - DUAL - UNEQUAL DIAMETERS - 3/4" & 2"
	083610-03-000	EA	CLAMP - WIRE - DUAL - EQUAL DIAMETERS - 2"
	088756-01-000	EA	GROMMET - WEB - 1 1/8"ID
	089329-02-000	EA	CLIP - SPRING
	091952-01-000	EA	CLIP - GRIPPER - 1" - BLACK VINYL COATED
	091952-02-000	EA	CLIP - GRIPPER - 3/4" - BLACK VINYL COATED
	091952-03-000	EA	CLIP - GRIPPER - 1/2" - BLACK VINYL COATED
	094362-02-000	EA	CLIP - XMAS TREE - BINDER HEAD - .9" LONG/ANY COLOR
	094362-05-000	EA	CLIP - XMAS TREE - ROUND HEAD - 1.4" LONG/ANY COLOR
	113133-02-01A	EA	RIVET - POP - ALUMINUM - 3/16 X .252 - .504 - BLACK
	114208-03-000	EA	GROMMET - EDGE LINER - FITS 2 1/2"
	114208-05-000	EA	GROMMET - EDGE LINER - FITS 2"
	118626-01-02A	EA	RIVET/POP - ALUMINUM - 3/16 X .08 - .375
	118626-01-01A	EA	RIVET/POP - ALUMINUM - 3/16 X 1.2"(GRIP RANGE .1"-.4")
	118626-02-01A	EA	RIVET/POP - ALUMINUM - 3/16 X .500 - .750
	118626-03-01A	EA	RIVET/POP - STAINLESS STEEL - 3/16 X .500 - .750
	137014-01-02A	EA	GROMMET - CABLE - BROWN
	137014-01-01A	EA	GROMMET - CABLE - ALMOND
	137014-01-03A	EA	GROMMET - CABLE - BLACK
	139118-02-01A	EA	GROMMET - SCREW - PLASTIC
	155498-01-01A	EA	CLAMP - CLOSED - 7/8"ID - VINYL DIP/GALVONIZED - BLACK

COPYRIGHT © 2006 WINNEBAGO INDUSTRIES INC.

SEALANTS & FASTENERS GROUP (CONTINUED)

MISCELLANEOUS FASTENERS

KEY	PART NUMBER	U/M	DESCRIPTION
	008343-01-000	EA	TIE - WIRE - 6"
	008343-02-000	EA	TIE - WIRE - 14"
	008343-03-000	EA	TIE - WIRE - 7 1/2" - BLACK
	029094-04-000	YD	VELCRO TAPE/LOOP - 1"WIDE - W/ADHESIVE BACK - BLACK
	029096-03-000	YD	VELCRO TAPE/HOOK - 1"WIDE - BLACK
	029096-04-000	YD	VELCRO TAPE/HOOK - 1"WIDE - BLACK - W/ADHESIVE BACK (PSA)
	048394-02-000	YD	VELCRO TAPE - HOOK - ADHESIVE BACK - 3/4" WIDE - BEIGE
	085774-01-000	FT	FASTENER - DUAL LOCK - 1" WIDE - ADHESIVE BACK - BLACK
	085774-02-000	FT	FASTENER - DUAL HOOK - 1" WIDE - ADHESIVE BACK - BLACK
	088792-02-000	YD	VELCRO TAPE - LOOP - 3/4" - ADHESIVE BACK - BEIGE
	088792-04-000	YD	VELCRO TAPE - HOOK - 5/8" - NON-ADHESIVE BACK - WHITE
	088792-05-000	YD	VELCRO TAPE - LOOP - 5/8" - NON-ADHESIVE BACK - WHITE
	108046-01-000	EA	CABLE TIE - SCREW MOUNT 8"
	108046-02-000	EA	CABLE TIE - SCREW MOUNT 15"
	110943-01-000	FT	FELT STRIP - 3/8" - ADHESIVE BACK - BLACK - 75' PER ROLL
	110943-02-000	FT	FELT STRIP - 3/8" - ADHESIVE BACK - WHITE
	143059-03-02A	EA	PAD/FELT - 1/4” THICK - ADHESIVE BACK - WHITE

COPYRIGHT © 2006 WINNEBAGO INDUSTRIES INC.

WATER & SEWAGE GROUP

DRAINAGE SYSTEM

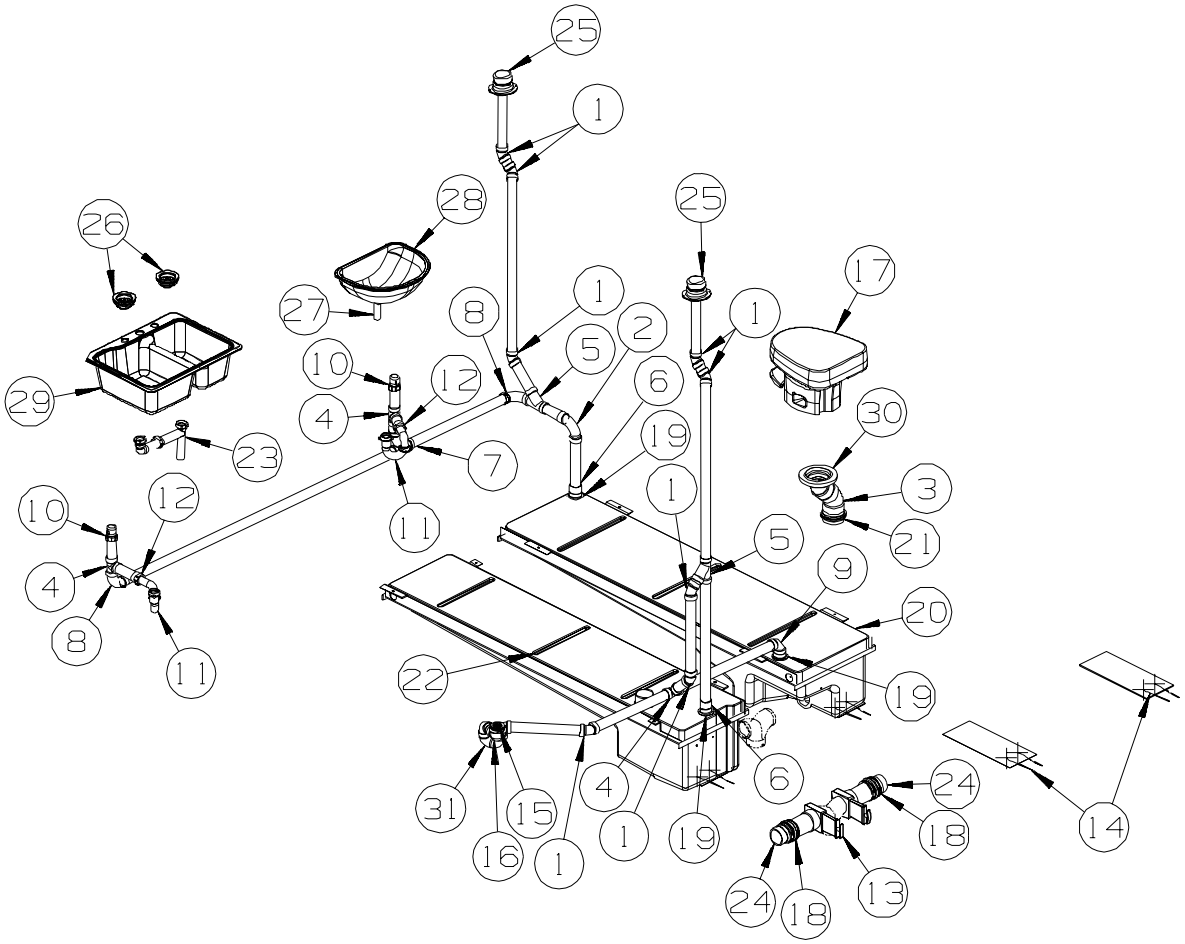

KEY	PART NUMBER	U/M	DESCRIPTION
1	010006-01-000	EA	ELBOW - 45 DEGREE - 1 1/2" HUB X HUB - PLASTIC
2	010008-01-000	EA	ELBOW - 90 DEGREE - 1 1/2" HUB X HUB - PLASTIC
3	010024-01-000	EA	ELBOW - 45 DEGREE - 3" HUB X HUB - PLASTIC
4	010071-01-000	EA	TEE - SANITARY - 1 1/2" HUB X HUB X HUB - PLASTIC
5	010073-01-000	EA	WYE - 45 DEGREE - 1 1/2" HUB X HUB X HUB - PLASTIC
6	010115-01-000	EA	COUPLING - 1 1/2" HUB X HUB - PLASTIC
7	031365-02-000	EA	TEE - 1 1/2" EXTRA LONG TURN - PLASTIC
8	033761-01-000	EA	ELBOW - 90 DEGREE - TURN - 1 1/2" HUB X 1 1/2" SPIGOT
9	034250-01-000	EA	ELBOW - 90 DEGREE - LONG TURN - 1 1/2" HUB X HUB - ABS
10	079968-01-000	EA	VENT - MECHANICAL/TRAP ARM - ANTI-SIPHON-2" X 7.3" PLASTIC
11	107538-02-000	EA	P-TRAP - PLASTIC - 1 1/2" W/EXTENSION ARM
11	011071-01-000	EA	P-TRAP - 1 1/2" - CSA - PLASTIC - CANADIAN
12	152146-01-000	EA	CONNECTOR - 1 1/2"P X 1 1/2"MPT
13	136143-01-000	EA	VALVE - DUAL - 3" X 3"
	139513-01-000	EA	HOSE - SEWER - 3" X 10' - W/ADAPTER
	062416-01-000	EA	ADAPTER - SEWER HOSE TO 3" PIPE
14	133972-04-000	EA	PAD/HEATER - HOLDING TANK - F/34 GALLON - DRAINAGE SYSTEM - HEATED
15	066440-01-000	EA	STRAINER - SHOWER DRAIN - W/RUBBER WASHER
16	131486-01-000	EA	ELBOW - DRAIN 1 1/2" - LOW PROFILE - TUB DRAIN
17*	147421-02-01A	EA	TOILET/AQUA MAGIC 5 (LOW) FOOTFLUSH - W/SPRAY - WHITE
18	078406-01-000	EA	COUPLER - 3" X 3" W/CLAMPS - RUBBER
19	061607-01-000	EA	GROMMET - HOLDING TANK - 1 1/2" NPS
20	139646-01-01A	EA	TANK - HOLDING - W/O FITTINGS
	049032-01-000	EA	PATCH - SPINWELD - 3/8" - PLASTIC
21	061607-02-000	EA	GROMMET - HOLDING TANK - 3" NPS
22	150881-01-01A	EA	TANK - HOLDING - 33 GALLON - W/O FITTINGS
	049032-01-000	EA	PATCH - SPINWELD - 3/8" - PLASTIC
23	011091-02-000	EA	WASTE - CONTINUOUS - DOUBLE SINK
24	010129-03-000	EA	NIPPLE - 3" X 3" TOE - PLASTIC
25	083558-03-000	EA	VENT W/COVER F/PLUMBING STACK - OFF WHITE
26	092303-01-000	EA	STRAINER - W/BASKET - GALLEY SINK - 4" OD

COPYRIGHT © 2006 WINNEBAGO INDUSTRIES INC.

WATER & SEWAGE GROUP (CONTINUED)

DRAINAGE SYSTEM (CONTINUED)

KEY	PART NUMBER	U/M	DESCRIPTION
27	106116-01-02A	EA	STRAINER/PLASTIC - STOPPER/TAILPIECE/GASKET & NUT-LAVATORY
	106116-02-01A	EA	GASKET - STRAINER
28	142285-01-01A	EA	SINK - LAVATORY
29	148870-01-01A	EA	SINK/DOUBLE - LRG/SML BASIN - 25" X 19" X 7"
30	151541-01-000	EA	FLANGE - CLOSET - ELBOW/SWIVEL - 4" X 3"
31	037763-01-000	EA	P-TRAP - PLASTIC - 1 1/2 HXH W/UNION

***COMPONENT PARTS LISTED LATER IN THIS GROUP**

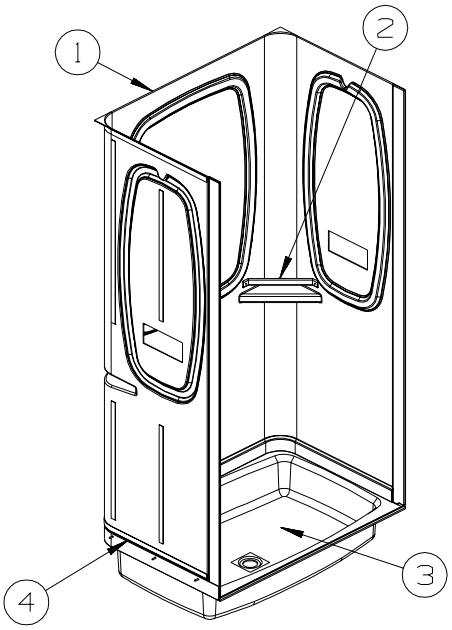

KEY	PART NUMBER	U/M	DESCRIPTION
1	147677-01-18A	EA	SURROUND - SHOWER/TUB
2	113714-04-02A	EA	RETAINER - SHELF/SHOWER - SOFT WHITE
3	M02630-87-S34	EA	SHOWER PAN - W/STRAINER
4	154585-03-01A	FT	SEAL - FOAM TAPE - ADHESIVE BACK - 1/8" X 3/4" - GRAY

COPYRIGHT © 2006 WINNEBAGO INDUSTRIES INC.

WATER & SEWAGE GROUP (CONTINUED)

COMPONENT PARTS FOR DRAINAGE SYSTEM

062415-01-000

KEY	PART NUMBER	U/M	DESCRIPTION	VENDOR NO.
	062415-01-700	EA	STRING-SEWER CAP	V#SV7 STRAP

096927-01-02A

KEY	PART NUMBER	U/M	DESCRIPTION	VENDOR NO.
	096927-01-700	EA	SINK STOPPER	M9801
	096927-01-701	EA	TAILPIECE-DRAIN-LAVATORY	M9802

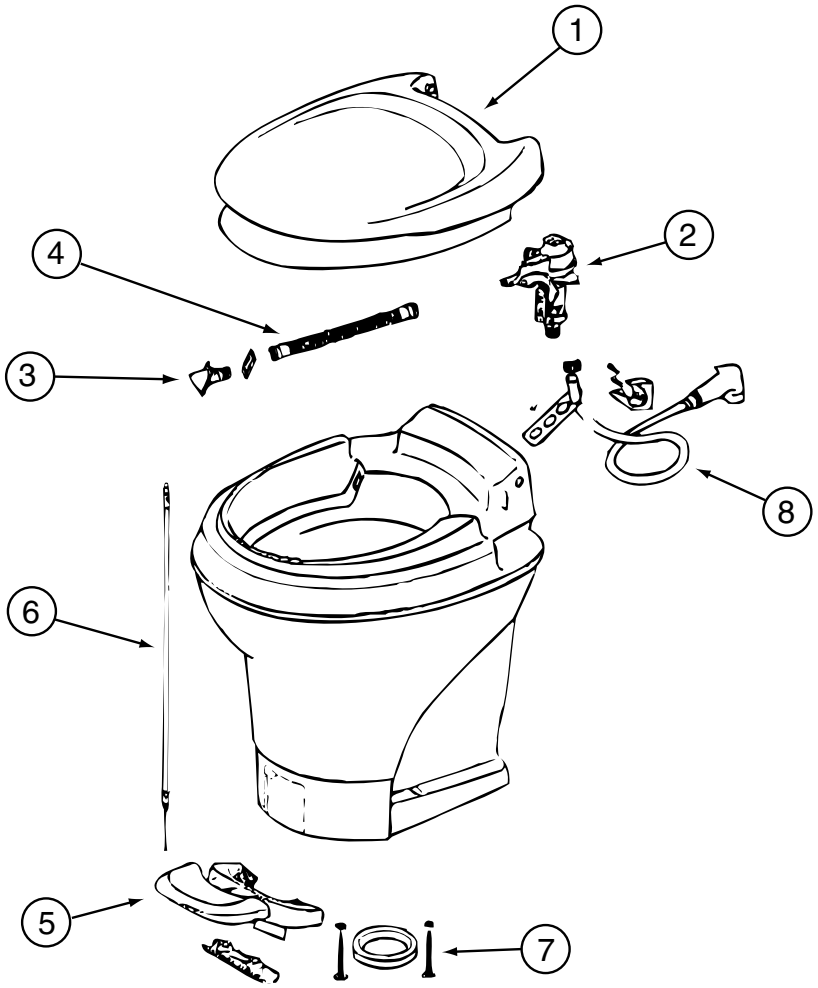

147421-01-01A, 147421-02-01A

KEY	PART NUMBER	U/M	DESCRIPTION		VENDOR NO.
1	147421-01-700	EA	SEAT & COVER ASSEMBLY(WHT)		31703
2	147421-01-701	EA	WATER MODULE ASSEMBLY		31705
3	147421-01-702	EA	NOZZLE ASSEMBLY		31706
4	147421-01-703	EA	LINK - WATER MODULE		31621
5	147421-01-704	EA	PEDAL - WHITE		31709
6	147421-01-705	EA	FOOT CABLE		31711
7	063740-01-706	EA	BOLT PACKAGE-FLOOR FLANGE		12524 THETFORD
8	147421-01-708	EA	HAND SPRAY KIT - WHITE HEAD	33226	
	147421-01-706	EA	SEAL - BLADE		31708
	147421-01-707	EA	CAP (UNIVERSAL BOLT) - WHITE		31713

COPYRIGHT © 2006 WINNEBAGO INDUSTRIES INC.

WATER & SEWAGE GROUP (CONTINUED)

WATER SYSTEM

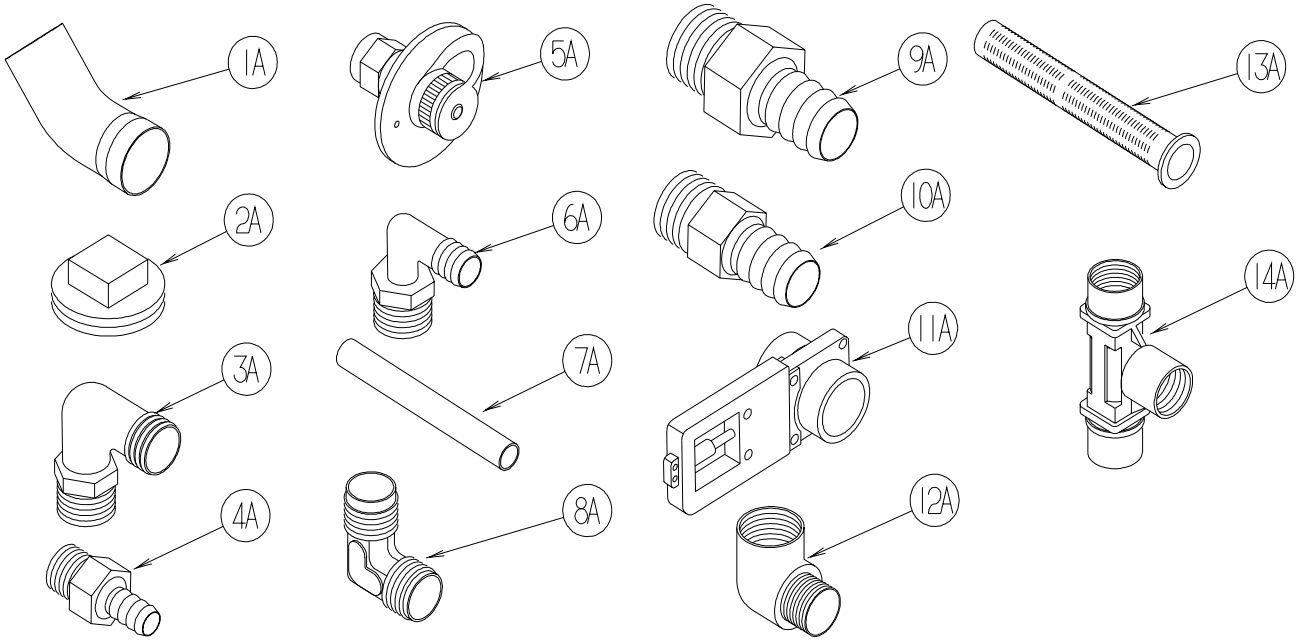

KEY	PART NUMBER	U/M	DESCRIPTION
1A	010009-01-000	EA	ELBOW - 90 DEGREE - 1/4 BEND - 1 1/2" PLASTIC
2A	010166-01-000	EA	PLUG/THREADED - 1 1/4"MPT - PLASTIC - BLACK - UL
3A	010219-01-000	EA	ELBOW - 1 1/4 MPT X 1 1/4 BARB - WATER FILL - PLASTIC
4A	010224-01-000	EA	ADAPTER - HOSE TO PIPE - 3/8 MPT X 3/8 BARB - PLASTIC
5A	010230-06-000	EA	FILL - CITY WATER - W/CHECK VALVE - MPT - BRUSHED ALUM
6A	035539-01-000	EA	ELBOW - 3/8 MPT X 3/8 BARB - PLASTIC
7A	039800-04-000	FT	TUBING - POLYBUTYL - 1/4"OD
7A	074462-02-000	FT	TUBING - VINYL - 3/8 ID X 20' - CLEAR
7A	112176-01-000	FT	TUBING - VINYL - REINFORCED - 1/2" ID
7A	124188-01-000	FT	TUBING - PEX - 1/2" ID X 20' - BLUE(COLD)
7A	124188-02-000	FT	TUBING - PEX - 1/2" ID X 20' - RED(HOT)
8A	039808-03-000	EA	ELBOW - 1/2" MPT X 1/2" MPT - PLASTIC
9A	044927-01-000	EA	ADAPTER - HOSE TO PIPE-1 1/4 MPTX1 1/4 BARB-BLACK PLASTIC
10A	044927-02-000	EA	ADAPTER - REDUCING - 1" MPT X 1.3" BARB - PLASTIC
11A	062421-03-000	EA	VALVE/DUMP W/O HANDLE - 1 1/2" X 1 1/2" HUB
	062421-05-000	EA	CABLE/ROD - F/DUMP VALVE - W/HANDLE - 48"
	062421-07-000	EA	CABLE/ROD - F/DUMP VALVE - W/HANDLE - 144"
	062421-08-000	EA	CABLE/ROD - F/DUMP VALVE - W/HANDLE - 108"
12A	065318-02-000	EA	ELBOW - 90 DEGREE - 3/8" MPT TO 3/8" FPT
13A	077954-02-000	EA	FILTER - WATER TANK - W/SCREEN IN TANK
14A	039798-01-000	EA	TEE - 1/2"MPT X 1/2"MPT X 1/2"MPT - PLASTIC

COPYRIGHT © 2006 WINNEBAGO INDUSTRIES INC.

WATER & SEWAGE GROUP (CONTINUED)

WATER SYSTEM (CONTINUED)

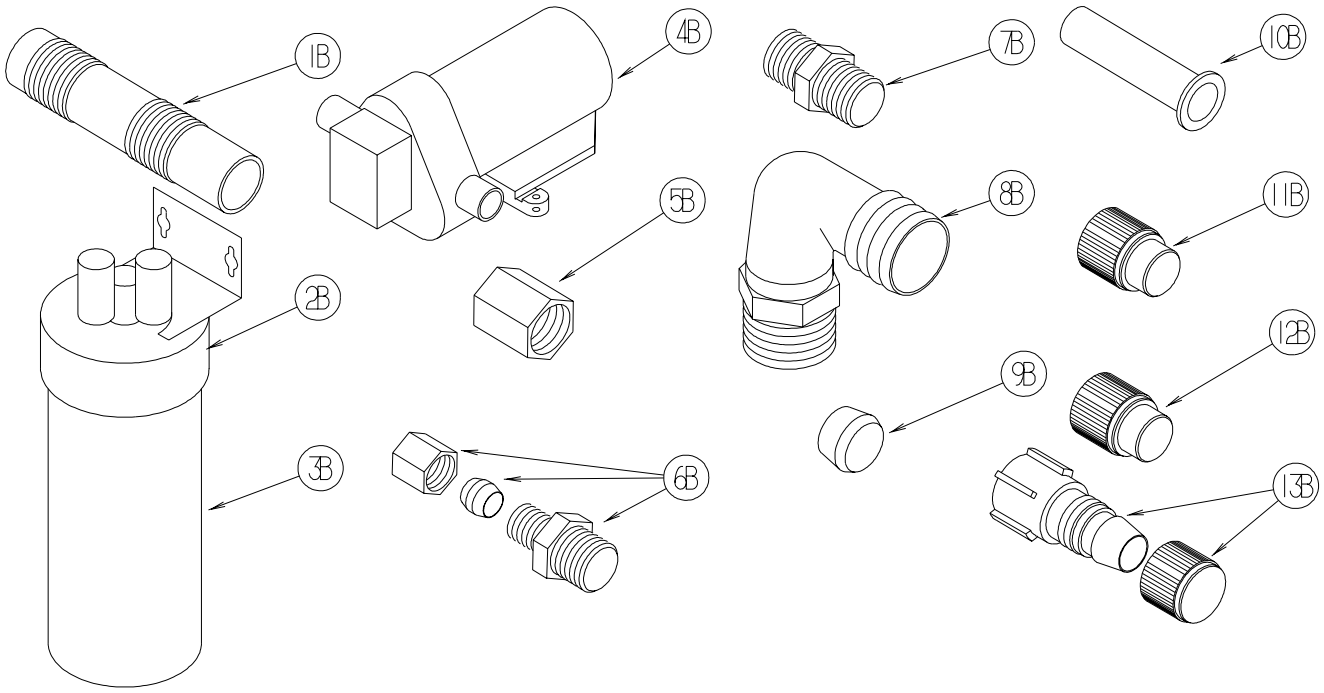

KEY	PART NUMBER	U/M	DESCRIPTION
1B	079381-01-000	FT	TUBING - RIBBED FLEXIBLE - WATER FILL - 1.4" ID
2B	087200-01-000	EA	FILTER-WATER PURIFCATION, EVERPURE QC2-AC
3B	087200-02-000	EA	CARTRIDGE-WATER FILTER,AC - EVERPURE 9601-11
4B*	098607-01-000	EA	PUMP - WATER - W/.5" MPT FITTING - FLOW 2.8 GPM
5B	101814-01-000	EA	COUPLING - FEMALE - 1/2" X 1/2" FPT - GRAY
6B	103798-01-000	EA	CONNECTOR - 1/4 OD X 3/8 MPT
7B	110438-02-000	EA	VALVE - CHECK - BRASS - 1/2 MPT X 1/2 MPT
8B	111223-02-000	EA	ELBOW - 1/2" MPT X 3/8" BARB - PLASTIC
8B	111223-03-000	EA	ELBOW - 3/4" MPT X 1/2" BARB - PLASTIC
8B	111223-04-000	EA	ELBOW - 1/2" MPT X 1/2" BARB - PLASTIC
9B	111888-01-000	EA	FERRULE - PLASTIC - .250 ID X .375 OD
10B	111888-02-000	EA	INSERT - BRASS - 1/4 COMP
11B	113697-01-000	EA	CAP - 3/8"P
12B	114427-01-000	EA	CAP - 1/2"P
13B	114427-02-000	EA	PLUG - W/COMP NUT - 1/2" PLASTIC PIPE/1/2" FLAIR-IT

COPYRIGHT © 2006 WINNEBAGO INDUSTRIES INC.

WATER & SEWAGE GROUP (CONTINUED)

WATER SYSTEM (CONTINUED)

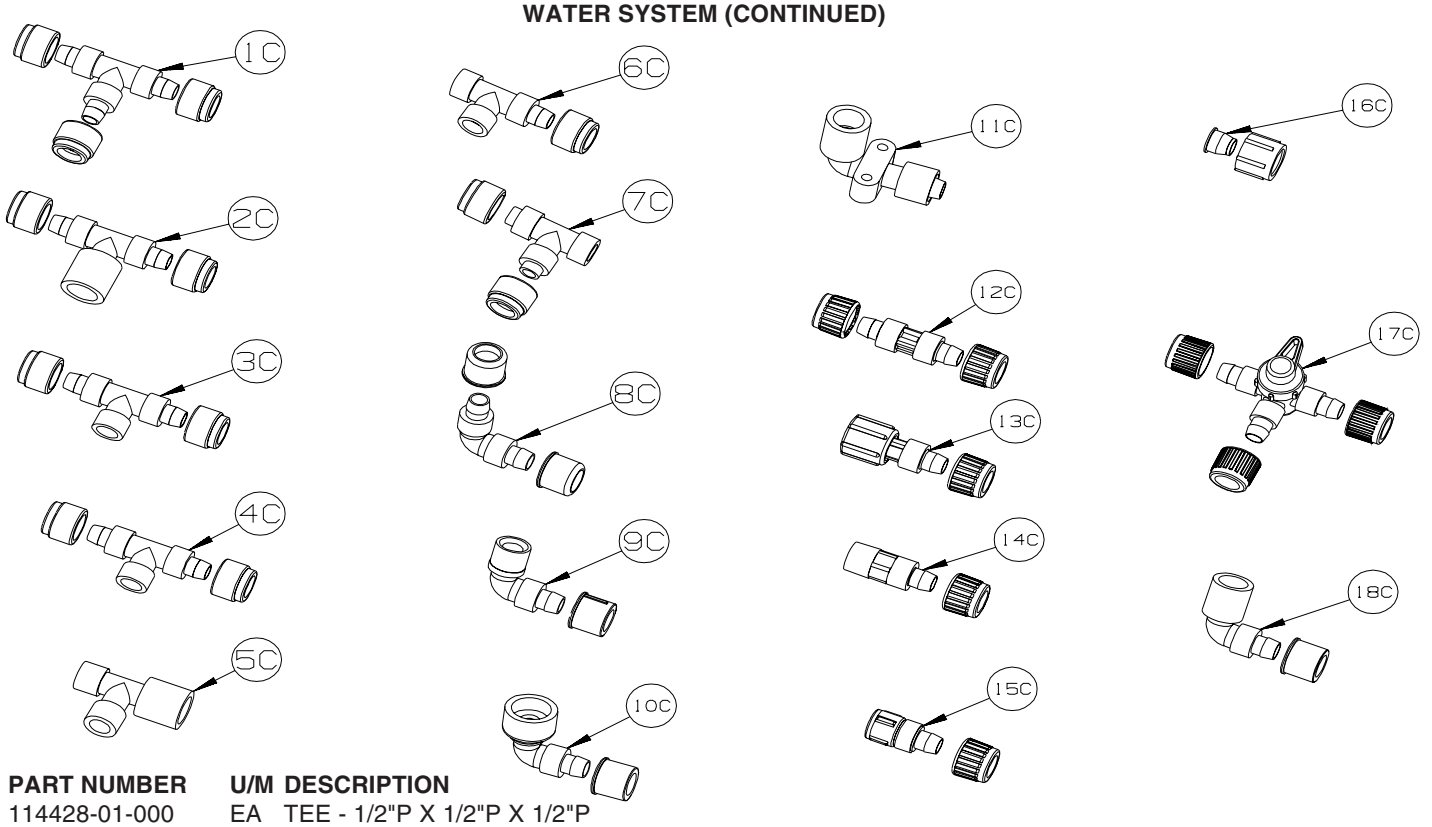

KEY	PART NUMBER	U/M	DESCRIPTION
1C	114428-01-000	EA	TEE - 1/2"P X 1/2"P X 1/2"P
2C	114428-02-000	EA	TEE - SWIVEL - 1/2"P X 1/2"P X 1/2"FPT
3C	114428-03-000	EA	TEE - 1/2"P X 1/2"P X 1/2"MPT
4C	114428-04-000	EA	TEE - 1/2"P X 1/2"P X 1/8"FPT
5C	114428-05-000	EA	TEE - 1/2" SWIVEL X 1/2" MPT X 1/2" MPT
6C	114428-06-000	EA	TEE - 1/2" P X 1/2" MPT X 1/2" MPT
7C	114428-07-000	EA	TEE - 1/2" P X 1/2" MPT X 1/2" P
8C	114429-01-000	EA	ELBOW - 1/2"P X 1/2"P
9C	114429-02-000	EA	ELBOW - 1/2"P X 1/2"MPT
9C	114429-04-000	EA	ELBOW - 1/2"P X 3/8"MPT
9C	114429-05-000	EA	ELBOW - 1/2"P X 3/4"MPT
9C	114429-10-000	EA	ELBOW - SWIVEL - 1/2"MPT X 1/2"FPT
10C	114429-06-000	EA	ELBOW - SWIVEL - 1/2"P X 3/4"FPT
10C	114429-08-000	EA	ELBOW - SWIVEL - 1/2"P X 1/2"FPT
11C	114429-09-000	EA	ELBOW - 1/2"P X 1/2"FPT DROP EAR
12C	114430-01-000	EA	ADAPTER - 1/2"P X 1/2"P
13C	114430-02-000	EA	ADAPTER - SWIVEL - 1/2"P X 1/2"FPT
13C	114430-04-000	EA	ADAPTER - SWIVEL - 1/2"P X 3/8"MPT
14C	114430-03-000	EA	ADAPTER - 1/2"P X 1/2"MPT
15C	114430-06-000	EA	ADAPTER - 1/2"P X 3/8"FPT
15C	114430-09-000	EA	ADAPTER - 1/2"P X 1/2"FPT
16C	114430-10-000	EA	ADAPTER - NUT - PIPE CONNECTION - 1/2"
17C	114431-01-000	EA	VALVE - 180 DEGREE/CENTER DRAIN - 1/2"P - THREE WAY
18C	114429-11-000	EA	ELBOW - 1/2"P X 1/2"FPT

COPYRIGHT © 2006 WINNEBAGO INDUSTRIES INC.

WATER & SEWAGE GROUP (CONTINUED)

WATER SYSTEM (CONTINUED)

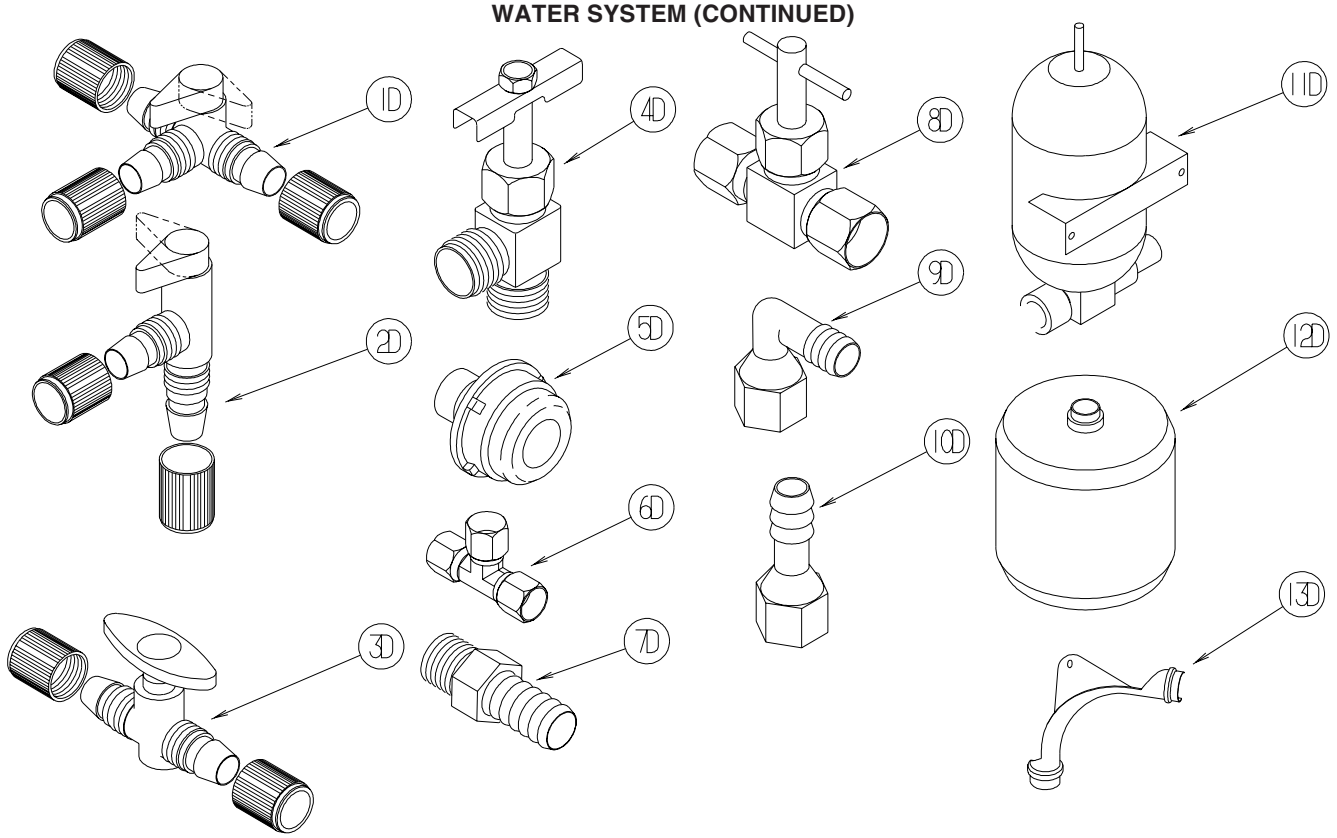

KEY	PART NUMBER	U/M	DESCRIPTION
1D	114431-02-000	EA	VALVE - WATER BYPASS - 1/2"P - THREE WAY (WATER HEATER)
2D	114431-03-000	EA	VALVE - 90 DEGREE DRAIN - 1/2"P
3D	114431-04-000	EA	VALVE - “INLINE SHUT-OFF” - 1/2"P
4D	114431-05-000	EA	VALVE - NEEDLE - 1/8" MPT X 1/4" COMPRESSION (ICE MAKER)
5D	114966-01-000	EA	FILTER - IN LINE - TWIST ON - 1/2" - NOT ILLUSTRATED FROM: 00-00-00 THRU: 09-26-04
5D	152925-01-01A	EA	FILTER - IN LINE - TWIST ON - 1/2" - BLACK - NOT ILLUSTRATED FROM: 09-27-04 THRU: 99-99-99
6D	118423-01-000	EA	FITTING - BRASS-TEE - 1/4C X 1/4C X 1/4C
7D	118809-01-000	EA	ADAPTER - 1/2" MPT X 3/8" BARB - PLASTIC
7D	118809-02-000	EA	ADAPTER - 1/2" MPT X 1/2" BARB - PLASTIC
8D	120868-01-000	EA	VALVE - NEEDLE - 1/4" COMPRESSION X 1/4" COMPRESSION
9D	123150-01-000	EA	ELBOW - 1/2 FPT X 1/2 BARB - SWIVEL
10D	123152-01-000	EA	ADAPTER - 1/2 FPT X 1/2 BARB - SWIVEL
11D	123243-01-000	EA	TANK - ACCUMULATOR - 24 OZ
12D	123317-01-000	EA	TANK - ACCUMULATOR - 2 GALLON
13D	124184-01-000	EA	SUPPORT - WATER LINE - BEND

COPYRIGHT © 2006 WINNEBAGO INDUSTRIES INC.

WATER & SEWAGE GROUP (CONTINUED)

WATER SYSTEM (CONTINUED)

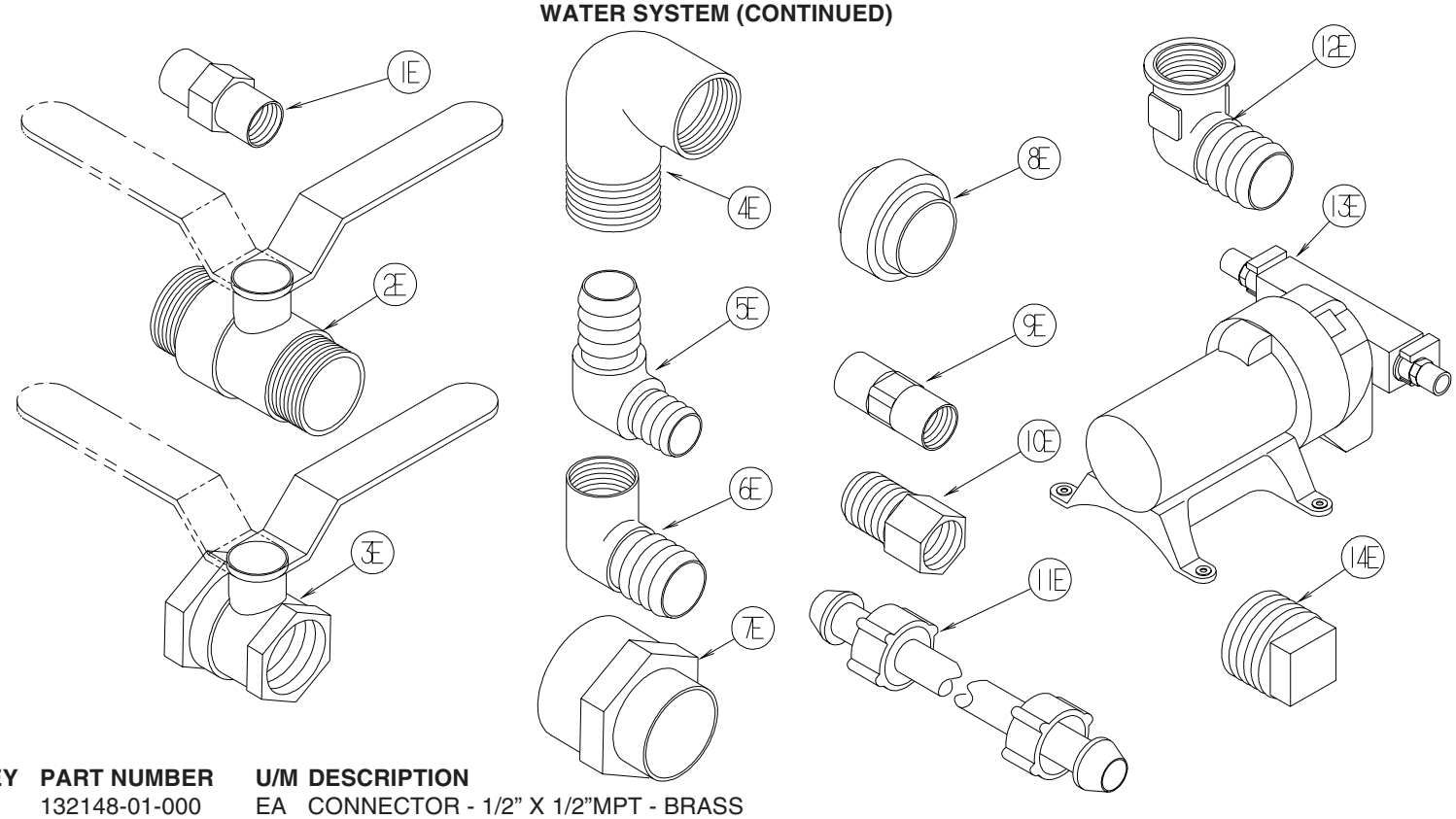

KEY	PART NUMBER	U/M	DESCRIPTION
1E	132148-01-000	EA	CONNECTOR - 1/2” X 1/2”MPT - BRASS
2E	132483-01-000	EA	VALVE/BALL - 1" - THREADED ENDS
3E	132483-02-000	EA	VALVE/BALL - 1/2" - BRASS - FPT
4E	132484-01-000	EA	ELBOW - 90 DEGREE - 1MPT X 1FPT - PLASTIC
5E	132781-01-000	EA	ELBOW - 1.3" BARB X 1.3" BARB - 90 DEGREE - PLASTIC
6E	132782-01-000	EA	ELBOW - 1"FPT X 1.3" BARB - 90 DEGREE - PLASTIC
7E	133835-01-000	EA	ADAPTER - REDUCING - 1 1/2" X 1 1/4"
8E	133889-01-000	EA	UNION - 1 1/2 DOUBLE SLIP - PVC
9E	135386-01-000	EA	NIPPLE - 1/2"
10E	136333-01-000	EA	ADAPTER - BRASS - 1/2"MPT X 1/2"FPT
11E	140821-01-000	EA	TUBE - WATER SUPPLY - 3/8" X 24"
11E	140821-02-000	EA	TUBE - WATER SUPPLY - 3/8" X 30"
11E	140821-03-000	EA	TUBE - WATER SUPPLY - 3/8" X 36"
11E	140821-04-000	EA	TUBE - WATER SUPPLY - 3/8" X 48"
11E	140821-05-000	EA	TUBE - WATER SUPPLY - 3/8" X 54"
11E	140821-06-000	EA	TUBE - WATER SUPPLY - 3/8" X 60"
11E	140821-07-000	EA	TUBE - WATER SUPPLY - 3/8" X 72"
11E	140821-08-000	EA	TUBE - WATER SUPPLY - 1/2" X 24"
11E	140821-09-000	EA	TUBE - WATER SUPPLY - 1/2" X 36"
11E	140821-10-000	EA	TUBE - WATER SUPPLY - 1/2" X 48"
12E	142812-01-000	EA	ELBOW - BRASS - 1/2"MPT X 1/2"FPT
13E*	144215-01-000	EA	PUMP - WATER - 5.7 GPM - W/1/2" MPT
*	144215-02-000	EA	STRAINER - WATER PUMP
14E	145609-01-000	EA	PLUG - BRASS - 1/2" MPT/HEX HEAD

***COMPONENT PARTS LISTED LATER IN THIS GROUP**

COPYRIGHT © 2006 WINNEBAGO INDUSTRIES INC.

WATER & SEWAGE GROUP (CONTINUED)

WATER SYSTEM (CONTINUED)

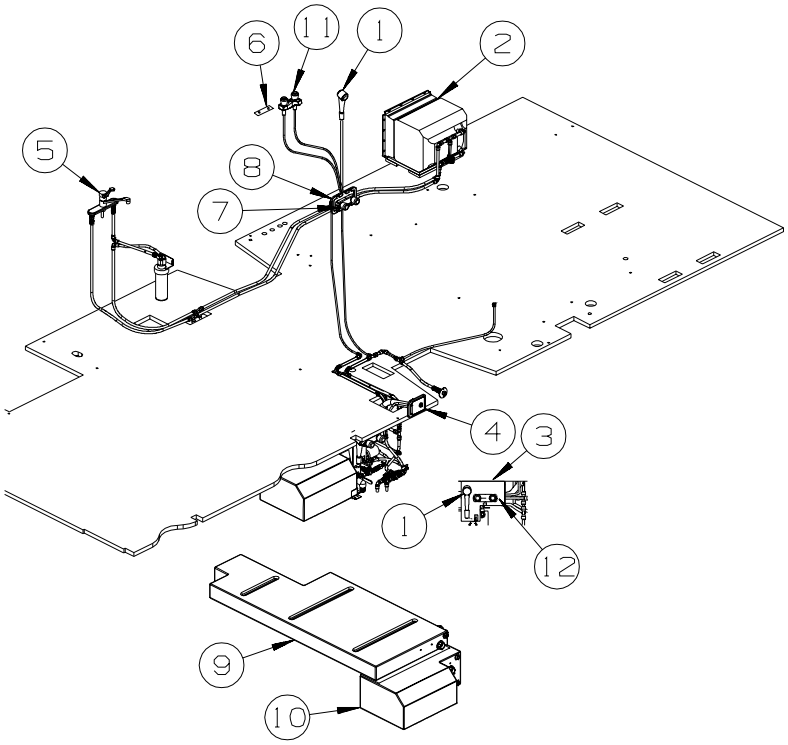

KEY	PART NUMBER	U/M	DESCRIPTION
1	131383-01-02A	EA	SHOWER HEAD - W/60" HOSE & BRACKET - WHITE
2*	051391-03-000	EA	WATER HEATER G6A-8E ELECTRONIC IGNITION
2	052009-06-000	EA	DOOR - WATER HEATER - BRIGHT WHITE - 18" X 14.6"
2	152239-01-01A	EA	FLANGE/MOUNTING/RECESSED - 19.3" X 15.8" - BRIGHT WHITE
3	114416-03-02B	EA	BRACKET/FAUCET SUPPORT - E-COATED
4	137169-01-01A	EA	WATER FILL/GRAVITY - W/DOOR - W/O LOCK - BRIGHT WHITE
	137169-02-01A	EA	ADAPTER/LOCK - (WASHER) F/GRAVITY WATERFILL
5	149164-01-01A	EA	FAUCET - GALLEY - SINGLE CONTROL - CHROME
6	091253-01-000	EA	GASKET - FAUCET - LAVATORY/GALLEY
7	075241-07-000	EA	FAUCET - SHOWER CONTROL - CHROME
8	075606-03-000	EA	PANEL - FAUCET SHOWER - SOFT WHITE
9	142398-03-01A	EA	TANK - WATER - 36 GALLON - W/FITTINGS
	042989-03-000	EA	FITTING - SPINWELD - 1 1/4"NPT - PLASTIC
	042989-04-000	EA	FITTING - SPINWELD - 3/8"FPT - PLASTIC
	042989-05-000	EA	FITTING - SPINWELD - 1/2"FPT - PLASTIC
	049032-01-000	EA	PATCH - SPINWELD - 3/8" - PLASTIC
10	142399-03-01A	EA	TANK - WATER - 36 GALLON - W/FITTINGS
	042989-03-000	EA	FITTING - SPINWELD - 1 1/4"NPT - PLASTIC
	042989-05-000	EA	FITTING - SPINWELD - 1/2"FPT - PLASTIC
	042989-08-000	EA	FITTING - SPINWELD - 1"FPT - PLASTIC
	049032-01-000	EA	PATCH - SPINWELD - 3/8" - PLASTIC
11	148886-01-01A	EA	FAUCET - LAVATORY/DUAL CONTROL/4" CENTER - CHROME
11	152311-01-01A	EA	FAUCET - LAVATORY - SINGLE CONTROL - CHROME - DELUXE FEATURE PKG
12*	075241-06-000	EA	FAUCET/SHOWER -.5"MPT W/1.9" INLET PIPES- EXTERIOR/BRT WHT

***COMPONENT PARTS LISTED LATER IN THIS GROUP**

COPYRIGHT © 2006 WINNEBAGO INDUSTRIES INC.

WATER & SEWAGE GROUP (CONTINUED)

COMPONENT PARTS FOR WATER SYSTEM

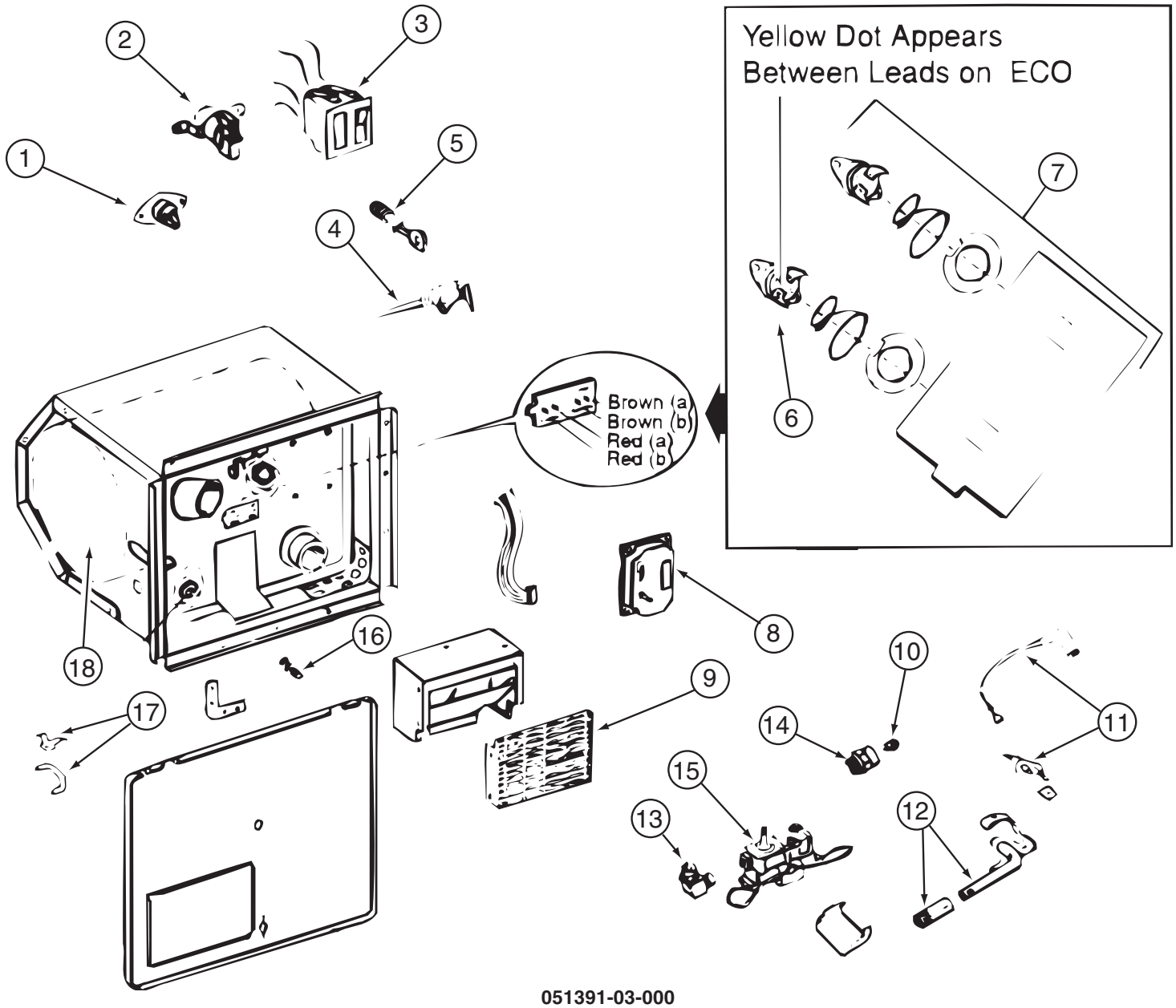

051391-03-000

KEY	PART NUMBER	U/M	DESCRIPTION	VENDOR NO.
3	051393-01-701	EA	SWITCH - REMOTE - W/LIGHT	91959
4	051391-01-704	EA	VALVE-RELIEF, 1/2" FITTING	91604
5	051391-01-705	EA	FASTENER-CAMLOCK	92609
6	051391-04-701	EA	THERMOSTAT 12V DC-120 PRESET	91470
7	051393-01-721	EA	THERMOSTAT W/ECO, 140 FRT MT	91447
9	051391-04-707	EA	KIT-EXHAUST, (FLUE & GASKET)	90960
10	051391-01-710	EA	ORIFICE-MAIN BURNER	92742
12	051391-04-703	EA	BURNER-MAIN/ELECTRONIC IG	91638
13	051391-01-714	EA	FITTING-ELBOW 45,3/8F X 3/8	MPT 1044
14	051391-03-700	EA	HOLDER-ORIFICE	91563
16	051391-01-715	EA	PLUG-DRAIN, 1 EA = 2 PER PKG	91857
17	051391-01-700	EA	HINGE KIT, (PIN & CLIP)	92568&92559
18	051391-04-706	EA	TANK-G6A-4E/6E/7E/8E-FRT.MT	91641
	051391-01-717	EA	GRILLE-WATER HEATER DOOR	92640
	051393-01-723	EA	SWITCH - THERMAL CUTOUT 2/PK	93853 NOW 93866
	051393-01-724	EA	BOARD-CIRCUIT,SPADE TERMINAL	93865
	051393-01-725	EA	ELECTRODE-SGL SPADE CONNECT.	93868
	051393-01-726	EA	VALVE/SOLENOID - W/O BRACKET	93870
	111129-01-711	EA	BRACKET-CORNER, SET OF FOUR	91928

CONTACT WINNEBAGO PARTS SALES FOR UNLISTED COMPONENT(S)

COPYRIGHT © 2006 WINNEBAGO INDUSTRIES INC.

WATER & SEWAGE GROUP (CONTINUED)

COMPONENT PARTS FOR WATER SYSTEM (CONTINUED)

075241-04-000, 075241-05-000, 075241-06-000

KEY	PART NUMBER	U/M	DESCRIPTION	VENDOR NO.
	075240-05-700	EA	CARTRIDGE - WASHERLESS	9-P42

098607-01-000

KEY	PART NUMBER	U/M	DESCRIPTION	VENDOR NO.
	098607-01-702	EA	DIAPHRAGM/DRIVE ASSEMBLY KIT	94-238-04
	098607-01-703	EA	VALVE KIT	94-232-00
	098607-01-705	EA	VALVE-CHECK, KIT	94-237-00
	098607-01-706	EA	HOUSING, W/SWITCH ONLY	94-231-20
	098607-01-707	EA	MOTOR W/BASEPLATE	11-148-04

COPYRIGHT © 2006 WINNEBAGO INDUSTRIES INC.

WINDOW & VENTS GROUP

WINDOW & VENT LAYOUT

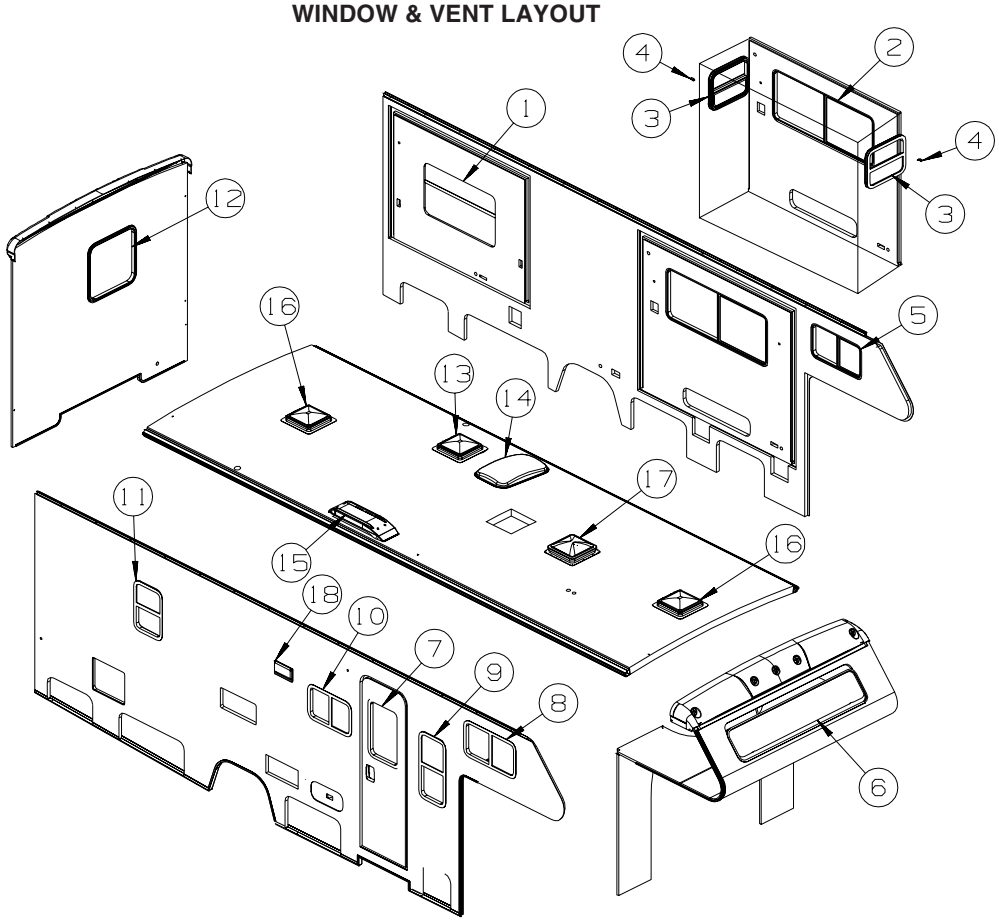

KEY	PART NUMBER	U/M	DESCRIPTION
1*	098647-30-02A	EA	WINDOW - DRVR HORIZ SLIDER W/TRIM - CLEAR - 24.2" X 41"
2	098647-74-01A	EA	WINDOW - DRIVER HORIZ SLIDER W/TRIM - 23.8" X 57.6"
3*	098644-15-01A	EA	WINDOW - VERTICAL SLIDER W/TRIM - 16.9" X 20.8"
3*	098644-13-01A	EA	WINDOW - VERTICAL SLIDER W/TRIM - 19.8" X 20.9" - U - SHAPED DINETTE
4	151905-01-01A	EA	CLIP/BRACKET - SCREEN RETAINER - BLACK
5*	098647-32-02A	EA	WINDOW - DRVR HORIZ SLIDER W/TRIM - CLEAR- 15.7" X 28.5"
6	103313-04-P07	EA	WINDOW - PICTURE - 14.3" X 71"
	002181-33-000	EA	GLASS - PICTURE WINDOW - 70.9"W X 14.2"H - TINTED
	099154-01-000	FT	CHANNEL - GLAZING - STATIONARY GLASS - .62" X .45" - BLK
	117054-06-01A	EA	TRIM/RETAINER - INSIDE - 14.9" X 71.8" - BLACK
7	117053-04-FB1	EA	WINDOW - PICTURE/CLEAR - W/O TRIM - 17" X 26.4"
	002181-27-000	EA	GLASS - PICTURE WINDOW - 25.8"W X 16.4"H - CLEAR
	087561-01-000	FT	SEAL - GLASS - EXTERIOR - .5" WIDE - VINYL BLACK
	117054-02-03A	EA	TRIM/RETAINER - INSIDE - 16.9" X 26.2" - BLACK
8*	098647-31-02A	EA	WINDOW - PASS HORIZ SLIDER W/TRIM - CLEAR - 15.7" X 28.5"
9*	098644-16-01A	EA	WINDOW - VERTICAL SLIDER W/TRIM - 30.2" X 14.3"
10*	098647-49-02A	EA	WINDOW - PASS HORIZ SLIDER W/TRIM - TINTED - 15" X 23.7"
11*	098644-01-01A	EA	WINDOW - VERTICLE SLIDER W/TRIM - TINTED - 22.2" X 15.2"
12*	151075-02-01A	EA	WINDOW - ESCAPE/PICTURE - 26.3" X 26.7" - 62% TINT
13*	122882-02-01A	EA	VENT - ROOF - W/FAN - W/O INSIDE GARNISH - UL - POWER VENT
13*	122882-03-01A	EA	VENT - ROOF - W/FAN - W/O INSIDE GARNISH - POWER VENT - CANADIAN
	009440-01-000	EA	GEAR/ARM - LIFT - ROOF VENT COVER
	048648-01-000	EA	MOTOR/ROOF VENT - W/RESISTER - 1/8"SHAFT - 12VOLT
	048649-01-000	EA	FAN BLADE - ROOF VENT - 6 BLADED - 6"RADIUS
13	122882-07-01A	EA	GARNISH - ROOF VENT - 2.5" TO 4.1"
14	122193-01-02A	EA	PANEL - SKYLITE - INNER - W/LIGHT INDENTATION
14	138372-01-02B	EA	TRIM - CORNER - SKYLIGHT - E-COATED
14	138379-02-01A	EA	PANEL/SKYLIGHT OTR - RECT/4"H CTR DOME-18.4" X 29.5 - WHT
15	149508-01-02A	EA	CAP - ROOF/REFRIGERATOR VENT - WHITE
15	149508-02-02A	EA	BASE - ROOF/REFRIGERATOR VENT - BRIGHT WHITE

COPYRIGHT © 2006 WINNEBAGO INDUSTRIES INC.

WINDOW & VENTS GROUP (CONTINUED)

WINDOW & VENT LAYOUT (CONTINUED)

KEY	PART NUMBER	U/M	DESCRIPTION
16*	122882-01-01A	EA	VENT - ROOF - NONPOWERED - W/O INSIDE GARNISH
	009440-01-000	EA	GEAR/ARM - LIFT - ROOF VENT COVER
16	122882-07-01A	EA	GARNISH - ROOF VENT - 2.5" TO 4.1"
17*	123780-03-01A	EA	FANTASTIC VENT-3"/4"ROOF-W/FAN-W/O THERM/PWR LIFT/WHT CVR - POWER VENT/VENTILATOR
	009440-01-000	EA	GEAR/ARM - LIFT - ROOF VENT COVER
18	147821-01-01A	EA	VENT - EXHAUST/RANGE HOOD - BRIGHT WHITE
18	147821-02-01A	EA	SHROUD - EXHAUST VENT/RANGE HOOD - BRIGHT WHITE

***COMPONENT PARTS LISTED LATER IN THIS GROUP**

COPYRIGHT © 2006 WINNEBAGO INDUSTRIES INC.

WINDOW & VENTS GROUP (CONTINUED)

COMPONENT PARTS FOR WINDOW & VENT LAYOUT

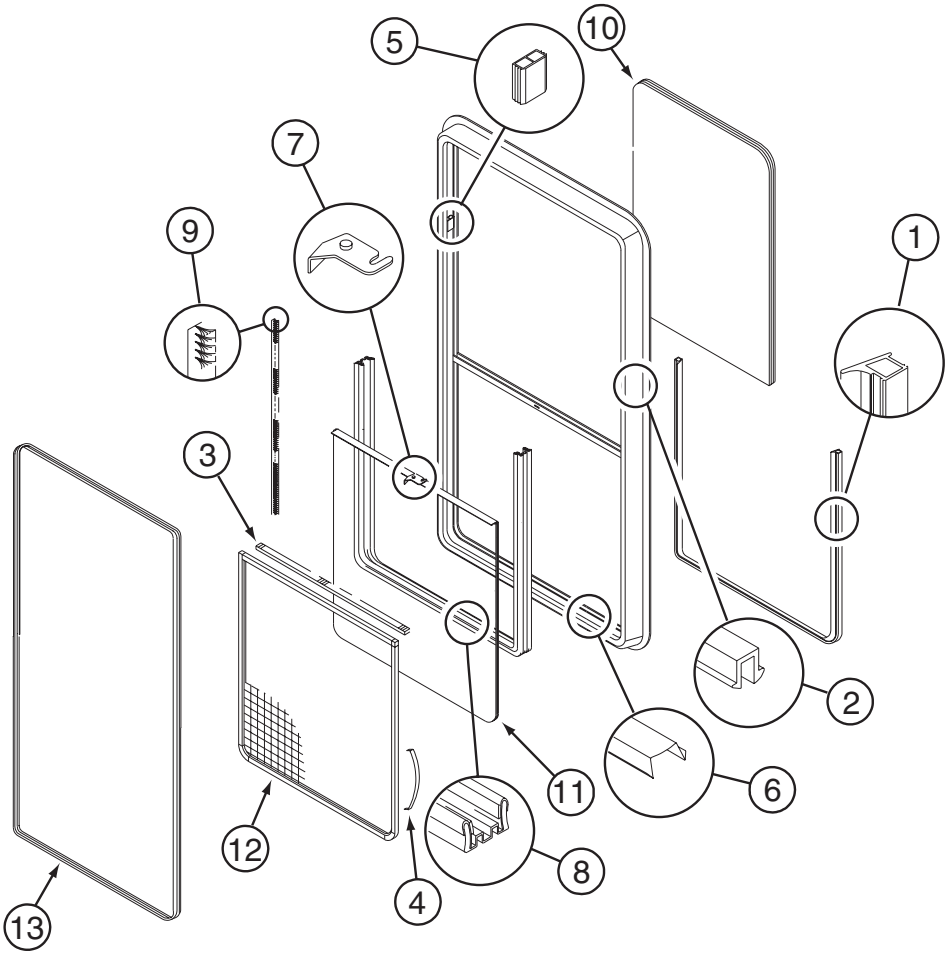

098644-01-01A

KEY	PART NUMBER	U/M	DESCRIPTION	VENDOR NO.
1	098644-01-716	FT	PLUG - FILLER	132-014470
2	098644-01-705	FT	GLAZING - STRIP	132-010231
3	098644-01-706	FT	WEATHERSTRIP - GLASS	171-010668
4	098644-01-713	EA	CLIP - SCREEN - METAL	226-016966
4	125582-01-701	EA	CLIP - SCREEN - PLASTIC	130-005153
5	098644-01-719	EA	STOP - SLIDER GLASS	132-014203
6	098644-01-710	FT	TRACK - SCREEN SPACER 12'	132-017135
7	098644-01-700	EA	LATCH - REPAIR KIT (BLACK)	B801-CK
7	098647-54-701	EA	LATCH - REPAIR KIT (RED)	B081-CK
8	098644-01-708	FT	CHANNEL - RUN PIERCED	122-016543
9	098644-01-711	FT	WEATHERSTRIP - SCREEN BLACK	171-016965
10	098644-01-704	EA	GLASS - STATIONARY 10"X13.7"	106-011866
11	098644-01-709	EA	GLASS - SLIDING W/SASH/LATCH	B963-G9
12	098644-01-712	EA	SCREEN ASM - W/SEALS & CLIPS	410-016476
13	098644-01-714	EA	RETAINER - TRIM	B963-67
	098644-01-717	FT	SPLINE - SCREEN	132-004716

COPYRIGHT © 2006 WINNEBAGO INDUSTRIES INC.

WINDOW & VENTS GROUP (CONTINUED)

COMPONENT PARTS FOR WINDOW & VENT LAYOUT (CONTINUED)

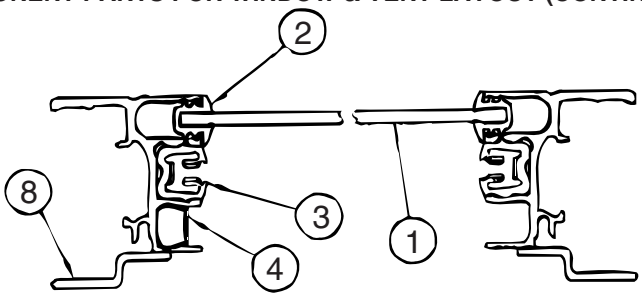

CROSS SECTION A-A

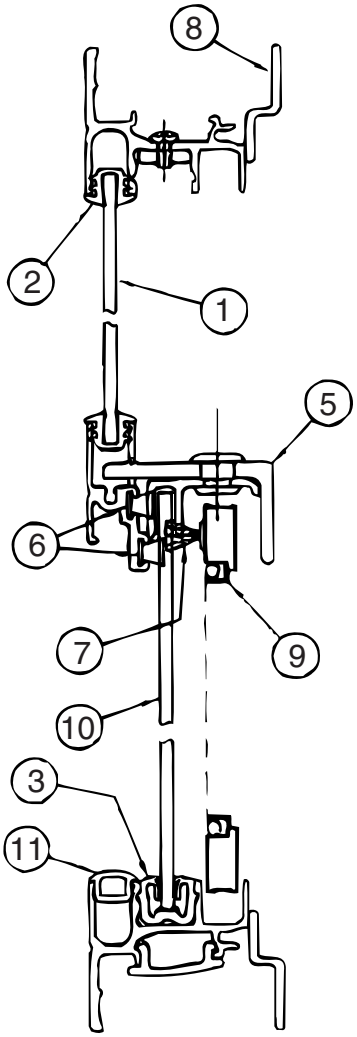

CROSS SECTION B-B

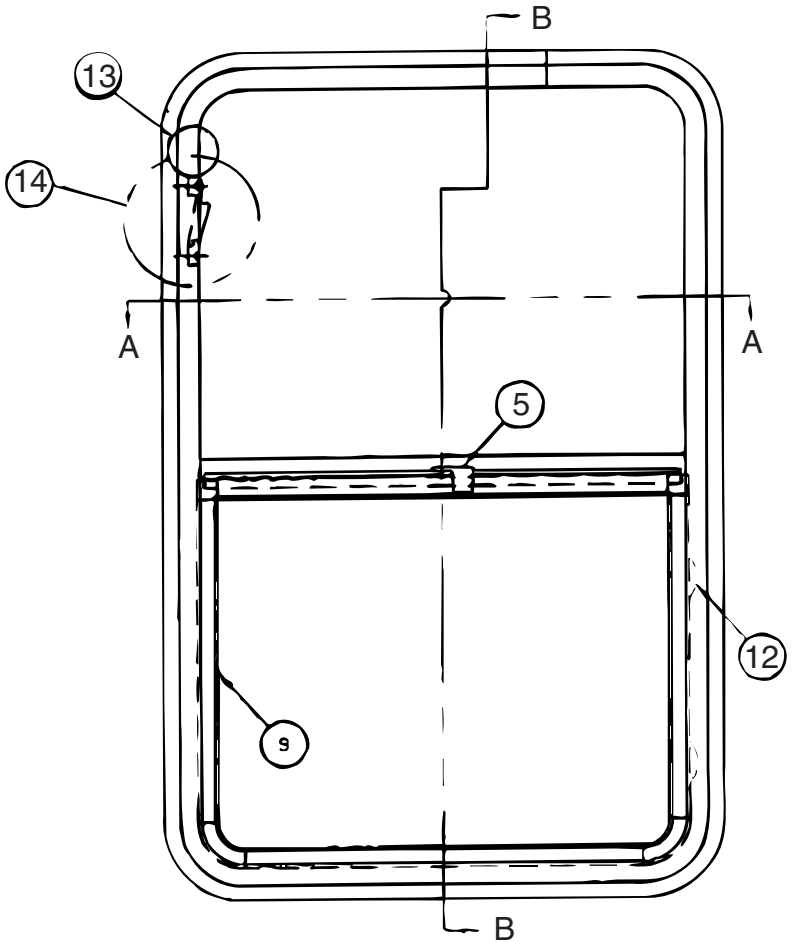

098644-07-02A

KEY	PART NUMBER	U/M	DESCRIPTION	VENDOR NO.
1	098644-07-702	EA	GLASS - STATIONARY	106-015777
2	098644-01-705	FT	GLAZING - STRIP	132-010231
3	098644-01-708	FT	CHANNEL - RUN PIERCED	122-016543
4	098644-01-710	FT	TRACK - SCREEN SPACER 12'	132-017135
5	098644-01-700	EA	LATCH - REPAIR KIT (BLACK)	B801-CK
6	098644-01-706	FT	WEATHERSTRIP - GLASS	171-010668
7	098644-01-711	FT	WEATHERSTRIP - SCREEN BLACK	171-016965
8	098644-07-705	EA	RETAINER - TRIM	CH02-66
9	098644-07-704	EA	SCREEN ASM - W/SEALS & CLIPS	410-018863
10	098644-07-703	EA	GLASS-SLIDING W/SASH & LATCH	H170G9
11	098644-01-716	FT	PLUG - FILLER	132-014470
12	125582-01-701	EA	CLIP - SCREEN - PLASTIC	130-005153
13	098644-01-719	EA	STOP - SLIDER GLASS	132-014203

CONTACT WINNEBAGO PARTS SALES FOR UNLISTED COMPONENT(S)

COPYRIGHT © 2006 WINNEBAGO INDUSTRIES INC.

WINDOW & VENTS GROUP (CONTINUED)

COMPONENT PARTS FOR WINDOW & VENT LAYOUT (CONTINUED)

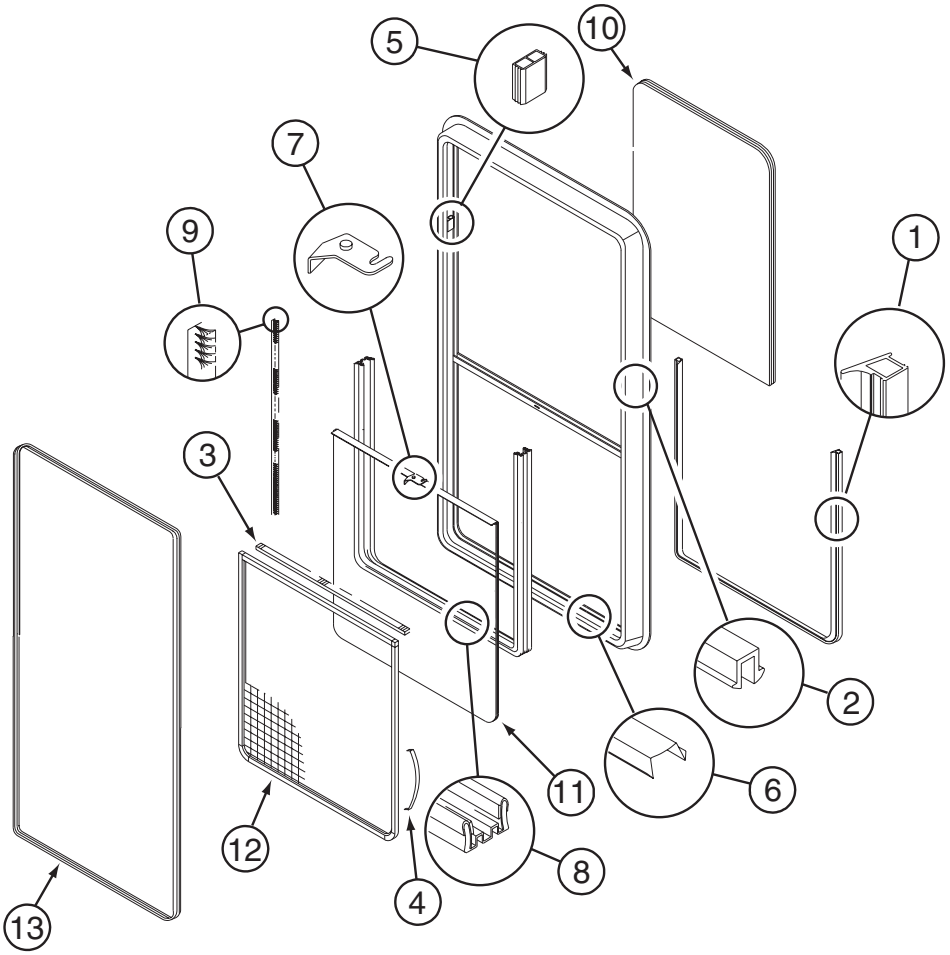

098644-13-01A

KEY	PART NUMBER	U/M	DESCRIPTION	VENDOR NO.
1	098644-01-716	FT	PLUG - FILLER	132-014470
2	098644-01-705	FT	GLAZING - STRIP	132-010231
3	098644-01-706	FT	WEATHERSTRIP - GLASS	171-010668
4	098644-01-713	EA	CLIP - SCREEN - METAL	226-016966
4	125582-01-701	EA	CLIP - SCREEN - PLASTIC	130-005153
5	098644-01-719	EA	STOP - SLIDER GLASS	132-014203
6	098644-01-710	FT	TRACK - SCREEN SPACER 12'	132-017135
7	098644-01-700	EA	LATCH - REPAIR KIT (BLACK)	B801-CK
7	098647-54-701	EA	LATCH - REPAIR KIT (RED)	B081-CK
8	098644-01-708	FT	CHANNEL - RUN PIERCED	122-016543
9	098644-01-711	FT	WEATHERSTRIP - SCREEN BLACK	171-016965
10	098644-13-700	EA	GLASS - STATIONARY	106-028698
11	098644-13-701	EA	GLASS - SLIDING W/SASH/LATCH	H702-G9
12	098644-13-702	EA	SCREEN ASM - W/SEALS/CLIPS	410-028663
13	098644-13-703	EA	RETAINER - TRIM	H702-60
	098644-01-717	FT	SPLINE - SCREEN	132-004716

COPYRIGHT © 2006 WINNEBAGO INDUSTRIES INC.

WATER & SEWAGE GROUP (CONTINUED)

COMPONENT PARTS FOR WINDOW & VENT LAYOUT (CONTINUED)

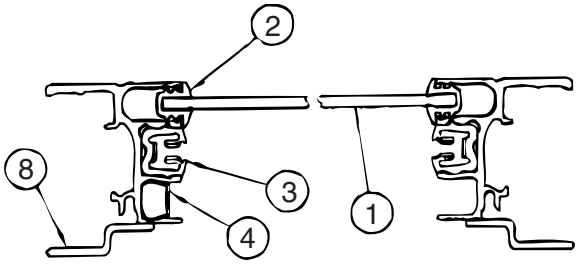

CROSS SECTION A-A

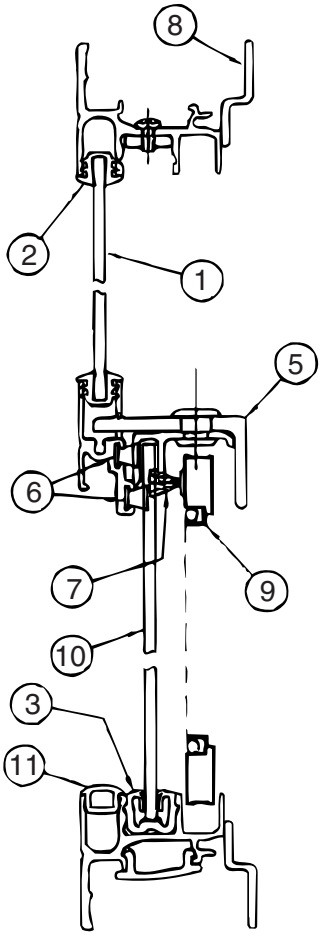

CROSS SECTION B-B

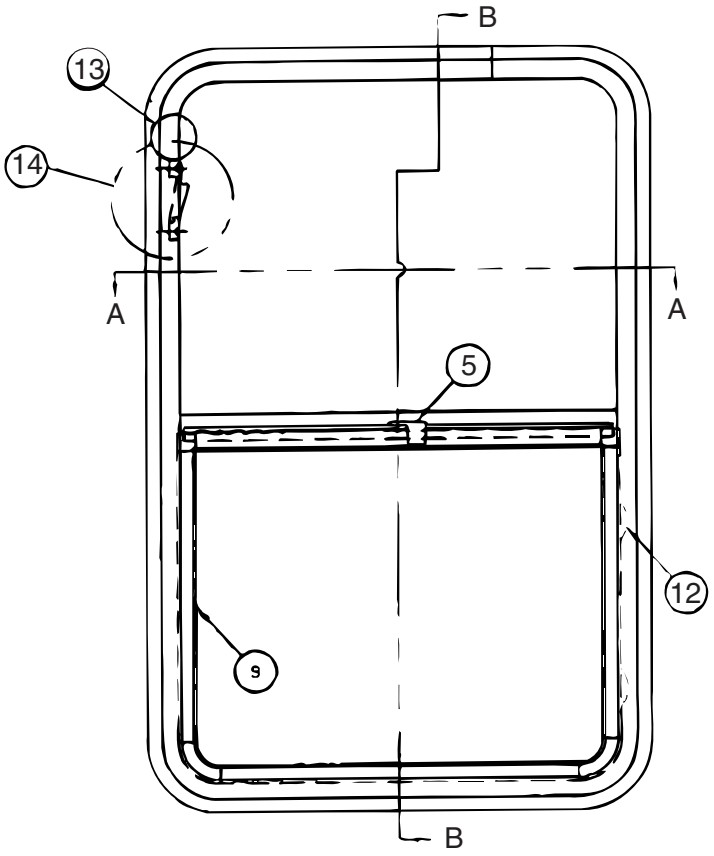

098644-15-01A

KEY	PART NUMBER	U/M	DESCRIPTION	VENDOR NO.
1	098644-15-700	EA	GLASS - STATIONARY	106-035739
2	098644-01-705	FT	GLAZING - STRIP	132-010231
3	098644-01-708	FT	CHANNEL - RUN PIERCED	122-016543
4	098644-01-710	FT	TRACK - SCREEN SPACER 12'	132-017135
5	098644-01-700	EA	LATCH - REPAIR KIT (BLACK)	B801-CK
6	098644-01-706	FT	WEATHERSTRIP - GLASS	171-010668
7	098644-01-711	FT	WEATHERSTRIP - SCREEN BLACK	171-016965
8	098644-15-701	EA	RETAINER - TRIM	H960-66
9	098644-15-702	EA	SCREEN ASM	410-035742
	098644-01-717	FT	SPLINE - SCREEN	132-004716
10	098644-15-703	EA	GLASS - SLIDING W/PULL & LATCH	H960-G9
11	098644-01-716	FT	PLUG - FILLER	132-014470
12	098644-01-713	EA	CLIP - SCREEN - METAL	226-016966
12	125582-01-701	EA	CLIP - SCREEN - PLASTIC	130-005153
13	098644-01-719	EA	STOP - SLIDER GLASS	132-014203
14	112898-04-703	EA	VERTICAL LATCH/HOLD UP/OPEN	DH343CK

COPYRIGHT © 2006 WINNEBAGO INDUSTRIES INC.

WATER & SEWAGE GROUP (CONTINUED)

COMPONENT PARTS FOR WINDOW & VENT LAYOUT (CONTINUED)

098644-16-01A

KEY	PART NUMBER	U/M	DESCRIPTION	VENDOR NO.
1	098644-16-700	EA	GLASS - STATIONARY	096-035902
2	098644-01-705	FT	GLAZING - STRIP	132-010231
3	098644-01-708	FT	CHANNEL - RUN PIERCED	122-016543
4	098644-01-710	FT	TRACK - SCREEN SPACER 12'	132-017135
5	098644-01-700	EA	LATCH - REPAIR KIT (BLACK)	B801-CK
6	098644-01-706	FT	WEATHERSTRIP - GLASS	171-010668
7	098644-01-711	FT	WEATHERSTRIP - SCREEN BLACK	171-016965
8	098644-07-705	EA	RETAINER - TRIM	CH02-66
9	098644-07-704	EA	SCREEN ASM W/SEALS & CLIPS	410-018863
	098644-01-717	FT	SPLINE - SCREEN	132-004716
10	098644-16-701	EA	GLASS - SLIDING W/PULL & LATCH	H170-C8
11	098644-01-716	FT	PLUG - FILLER	132-014470
12	098644-01-713	EA	CLIP - SCREEN - METAL	226-016966
12	125582-01-701	EA	CLIP - SCREEN - PLASTIC	130-005153
13	098644-01-719	EA	STOP - SLIDER GLASS	132-014203
14	112898-04-703	EA	VERTICAL LATCH/HOLD UP/OPEN	DH343CK

COPYRIGHT © 2006 WINNEBAGO INDUSTRIES INC.

WINDOW & VENTS GROUP (CONTINUED)

COMPONENT PARTS FOR WINDOW & VENT LAYOUT (CONTINUED)

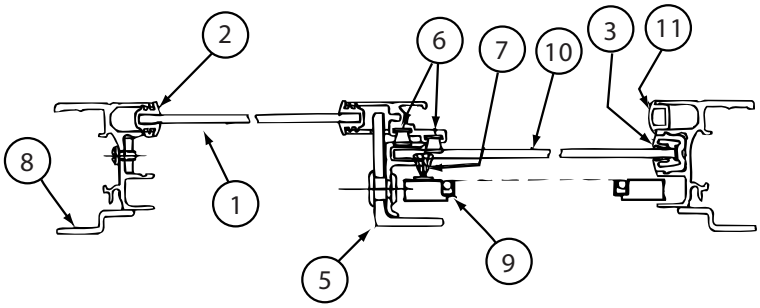

CROSS SECTION B-B

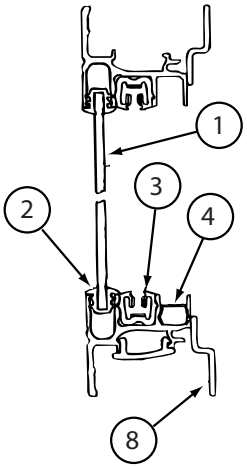

CROSS SECTION A-A

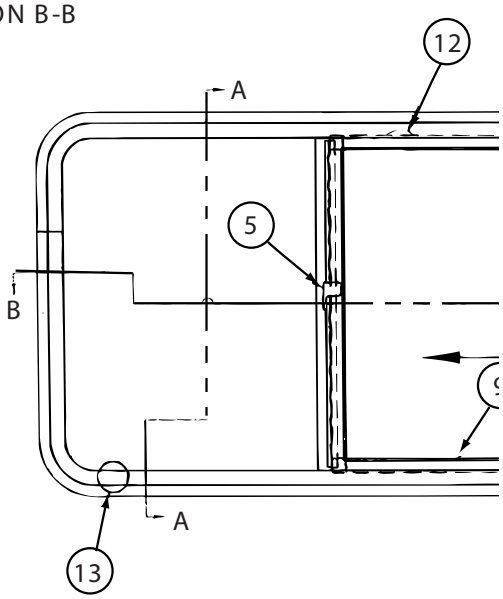

098647-27-02A, 098647-28-02A

KEY	PART NUMBER	U/M	DESCRIPTION	VENDOR NO.
1	098644-01-716	FT	PLUG - FILLER	132-014470
2	098644-01-705	FT	GLAZING - STRIP	132-010231
3	098644-01-706	FT	WEATHERSTRIP - GLASS	171-010668
4	098644-01-713	EA	CLIP - SCREEN - METAL	226-016966
4	125582-01-701	EA	CLIP - SCREEN - PLASTIC	130-005153
5	098644-01-719	EA	STOP - SLIDER GLASS	132-014203
6	098644-01-710	FT	TRACK - SCREEN SPACER 12'	132-017135
7	098644-01-700	EA	LATCH - REPAIR KIT (BLACK)	B801-CK
7	098647-54-701	EA	LATCH - REPAIR KIT (RED)	B081-CK
8	098644-01-708	FT	CHANNEL - RUN PIERCED	122-016543
9	098644-01-711	FT	WEATHERSTRIP - SCREEN BLACK	171-016965
10	098647-27-702	EA	GLASS - STATIONARY	096-017868
11	098647-27-703	EA	GLASS-SLIDING W/SASH & LATCH	H287-C8
12	098647-23-704	EA	SCREEN ASM - W/SEALS & CLIPS	410-019066
13	098647-27-704	EA	RETAINER - TRIM	H287-66
	098644-01-717	FT	SPLINE - SCREEN	132-004716

COPYRIGHT © 2006 WINNEBAGO INDUSTRIES INC.

WINDOW & VENTS GROUP (CONTINUED)

COMPONENT PARTS FOR WINDOW & VENT LAYOUT (CONTINUED)

098647-29-02A, 098647-30-02A

KEY	PART NUMBER	U/M	DESCRIPTION	VENDOR NO.
1	098644-01-716	FT	PLUG - FILLER	132-014470
2	098644-01-705	FT	GLAZING - STRIP	132-010231
3	098644-01-706	FT	WEATHERSTRIP - GLASS	171-010668
4	098644-01-713	EA	CLIP - SCREEN - METAL	226-016966
4	125582-01-701	EA	CLIP - SCREEN - PLASTIC	130-005153
5	098644-01-719	EA	STOP - SLIDER GLASS	132-014203
6	098644-01-710	FT	TRACK - SCREEN SPACER 12'	132-017135
7	098644-01-700	EA	LATCH - REPAIR KIT (BLACK)	B801-CK
7	098647-54-701	EA	LATCH - REPAIR KIT (RED)	B081-CK
8	098644-01-708	FT	CHANNEL - RUN PIERCED	122-016543
9	098644-01-711	FT	WEATHERSTRIP - SCREEN BLACK	171-016965
10	098647-29-702	EA	GLASS - STATIONARY	096-019295
11	098647-29-703	EA	GLASS-SLIDING W/SASH & LATCH	H172-C8
12	098647-29-704	EA	SCREEN ASM - W/SEALS & CLIPS	410-018864
13	098647-29-705	EA	RETAINER - TRIM	CH04-66
	098644-01-717	FT	SPLINE - SCREEN	132-004716

098647-31-02A, 098647-32-02A

KEY	PART NUMBER	U/M	DESCRIPTION	VENDOR NO.
1	098644-01-716	FT	PLUG - FILLER	132-014470
2	098644-01-705	FT	GLAZING - STRIP	132-010231
3	098644-01-706	FT	WEATHERSTRIP - GLASS	171-010668
4	098644-01-713	EA	CLIP - SCREEN - METAL	226-016966
4	125582-01-701	EA	CLIP - SCREEN - PLASTIC	130-005153
5	098644-01-719	EA	STOP - SLIDER GLASS	132-014203
6	098644-01-710	FT	TRACK - SCREEN SPACER 12'	132-017135
7	098644-01-700	EA	LATCH - REPAIR KIT (BLACK)	B801-CK
7	098647-54-701	EA	LATCH - REPAIR KIT (RED)	B081-CK
8	098644-01-708	FT	CHANNEL - RUN PIERCED	122-016543
9	098644-01-711	FT	WEATHERSTRIP - SCREEN BLACK	171-016965
10	098647-31-702	EA	GLASS - STATIONARY	096-019299
11	098647-31-703	EA	GLASS-SLIDING W/SASH & LATCH	H425-C8
12	098647-31-704	EA	SCREEN ASM - W/SEALS & CLIPS	410-019128
13	098647-31-705	EA	RETAINER - TRIM	CH29-66
	098644-01-717	FT	SPLINE - SCREEN	132-004716

098647-38-02A

KEY	PART NUMBER	U/M	DESCRIPTION	VENDOR NO.
1	098644-01-716	FT	PLUG - FILLER	132-014470
2	098644-01-705	FT	GLAZING - STRIP	132-010231
3	098644-01-706	FT	WEATHERSTRIP - GLASS	171-010668
4	098644-01-713	EA	CLIP - SCREEN - METAL	226-016966
4	125582-01-701	EA	CLIP - SCREEN - PLASTIC	130-005153
5	098644-01-719	EA	STOP - SLIDER GLASS	132-014203
6	098644-01-710	FT	TRACK - SCREEN SPACER 12'	132-017135
7	098644-01-700	EA	LATCH - REPAIR KIT (BLACK)	B801-CK
7	098647-54-701	EA	LATCH - REPAIR KIT (RED)	B081-CK
8	098644-01-708	FT	CHANNEL - RUN PIERCED	122-016543
9	098644-01-711	FT	WEATHERSTRIP - SCREEN BLACK	171-016965
10	098647 38 702	EA	GLASS - STATIONARY	096-017854
11	098647 38 703	EA	GLASS-SLIDING W/SASH & LATCH	H320-C8
12	098647 38 704	EA	SCREEN ASM - W/SEALS & CLIPS	410-019063
13	098647 38 705	EA	RETAINER - TRIM	H303-66
	098644-01-717	FT	SPLINE - SCREEN	132-004716

COPYRIGHT © 2006 WINNEBAGO INDUSTRIES INC.

WINDOW & VENTS GROUP (CONTINUED)

COMPONENT PARTS FOR WINDOW & VENT LAYOUT (CONTINUED)

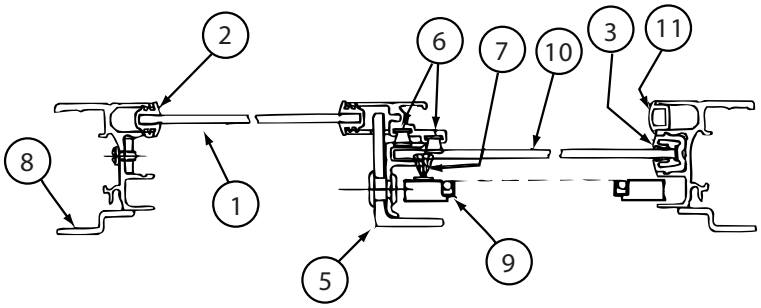

CROSS SECTION B-B

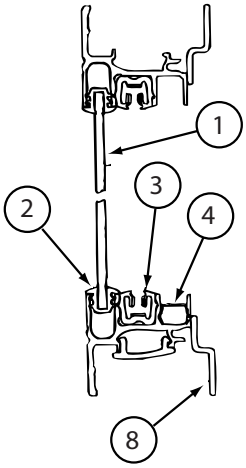

CROSS SECTION A-A

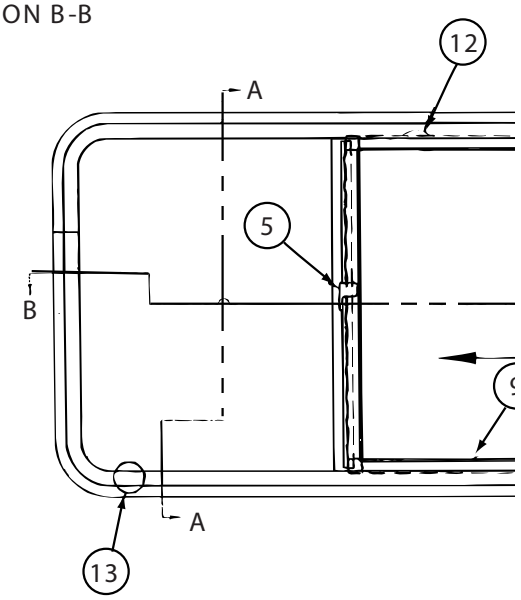

098647-47-02A

KEY	PART NUMBER	U/M	DESCRIPTION	VENDOR NO.
1	098644-01-716	FT	PLUG - FILLER	132-014470
2	098644-01-705	FT	GLAZING - STRIP	132-010231
3	098644-01-706	FT	WEATHERSTRIP - GLASS	171-010668
4	098644-01-713	EA	CLIP - SCREEN - METAL	226-016966
4	125582-01-701	EA	CLIP - SCREEN - PLASTIC	130-005153
5	098644-01-719	EA	STOP - SLIDER GLASS	132-014203
6	098644-01-710	FT	TRACK - SCREEN SPACER 12'	132-017135
7	098644-01-700	EA	LATCH - REPAIR KIT (BLACK)	B801-CK
7	098647-54-701	EA	LATCH - REPAIR KIT (RED)	B081-CK
8	098644-01-708	FT	CHANNEL - RUN PIERCED	122-016543
9	098644-01-711	FT	WEATHERSTRIP - SCREEN BLACK	171-016965
10	098647-47-700	EA	GLASS - STATIONARY	106-025224
11	098647-47-701	EA	GLASS-SLIDING W/SASH & LATCH	H493-G9
12	098647-47-702	EA	SCREEN ASM - W/SEALS & CLIPS	410-025226
13	098647-47-704	EA	RETAINER - TRIM	H493-66
	098644-01-717	FT	SPLINE - SCREEN	132-004716

COPYRIGHT © 2006 WINNEBAGO INDUSTRIES INC.

WINDOW & VENTS GROUP (CONTINUED)

COMPONENT PARTS FOR WINDOW & VENT LAYOUT (CONTINUED)

098647-49-02A

KEY	PART NUMBER	U/M	DESCRIPTION	VENDOR NO.
1	098644-01-716	FT	PLUG - FILLER	132-014470
2	098644-01-705	FT	GLAZING - STRIP	132-010231
3	098644-01-706	FT	WEATHERSTRIP - GLASS	171-010668
4	098644-01-713	EA	CLIP - SCREEN - METAL	226-016966
4	125582-01-701	EA	CLIP - SCREEN - PLASTIC	130-005153
5	098644-01-719	EA	STOP - SLIDER GLASS	132-014203
6	098644-01-710	FT	TRACK - SCREEN SPACER 12'	132-017135
7	098644-01-700	EA	LATCH - REPAIR KIT (BLACK)	B801-CK
7	098647-54-701	EA	LATCH - REPAIR KIT (RED)	B081-CK
8	098644-01-708	FT	CHANNEL - RUN PIERCED	122-016543
9	098644-01-711	FT	WEATHERSTRIP - SCREEN BLACK	171-016965
10	098647-49-700	EA	GLASS - STATIONARY	096-012066
11	098647-49-701	EA	GLASS-SLIDING W/SASH & LATCH	B969-G8
12	112795-56-702	EA	SCREEN ASM - W/SEALS & CLIPS	410-019414
13	098647-49-702	EA	RETAINER - TRIM	H969-66
	098644-01-717	FT	SPLINE - SCREEN	132-004716

098647-68-01A

KEY	PART NUMBER	U/M	DESCRIPTION	VENDOR NO.
1	098644-01-716	FT	PLUG - FILLER	132-014470
2	098644-01-705	FT	GLAZING - STRIP	132-010231
3	098644-01-706	FT	WEATHERSTRIP - GLASS	171-010668
4	098644-01-713	EA	CLIP - SCREEN - METAL	226-016966
4	125582-01-701	EA	CLIP - SCREEN - PLASTIC	130-0
5	098644-01-719	EA	STOP - SLIDER GLASS	132-014203
6	098644-01-710	FT	TRACK - SCREEN SPACER 12'	132-017135
7	098644-01-700	EA	LATCH - REPAIR KIT (BLACK)	B801-CK
7	098647-54-701	EA	LATCH - REPAIR KIT (RED)	B081-CK
8	098644-01-708	FT	CHANNEL - RUN PIERCED	122-016543
9	098644-01-711	FT	WEATHERSTRIP - SCREEN BLACK	171-016965
10	098647-68-700	EA	GLASS - STATIONARY	096-029585
11	098647-68-701	EA	GLASS-SLIDING W/SASH & LATCH	
12	098647-47-702	EA	SCREEN ASM - W/SEALS & CLIPS	410-025226
13	098647-47-704	EA	RETAINER - TRIM	H493-66
	098644-01-717	FT	SPLINE - SCREEN	132-004716

098647-71 -01A

KEY	PART NUMBER	U/M	DESCRIPTION	VENDOR NO.
1	098644-01-716	FT	PLUG - FILLER	132-014470
2	098644-01-705	FT	GLAZING - STRIP	132-010231
3	098644-01-706	FT	WEATHERSTRIP - GLASS	171-010668
4	098644-01-713	EA	CLIP - SCREEN - METAL	226-016966
4	125582-01-701	EA	CLIP - SCREEN - PLASTIC	130-0
5	098644-01-719	EA	STOP - SLIDER GLASS	132-014203
6	098644-01-710	FT	TRACK - SCREEN SPACER 12'	132-017135
7	098644-01-700	EA	LATCH - REPAIR KIT (BLACK)	B801-CK
7	098647-54-701	EA	LATCH - REPAIR KIT (RED)	B081-CK
8	098644-01-708	FT	CHANNEL - RUN PIERCED	122-016543
9	098644-01-711	FT	WEATHERSTRIP - SCREEN BLACK	171-016965
10	098647-71-700	EA	GLASS - STATIONARY	096-035492
11	098647-71-701	EA	GLASS-SLIDING W/SASH & LATCH	H414-C8
12	112795-24-704	EA	SCREEN ASM - W/SEALS & CLIPS	410-019129
13	112795-92-702	EA	RETAINER - TRIM	H414-66
	098644-01-717	FT	SPLINE - SCREEN	132-004716
	112795-24-706	FT	SEAL - SPLINE/GRAY - ESCAPE	132-010481
	112898-06-707	EA	HANDLE/RH-EGRESS(SLD)ESC-RED	182-025911
	112898-06-708	EA	HANDLE/LH-EGRESS(SLD)ESC-RED	182-025912

COPYRIGHT © 2006 WINNEBAGO INDUSTRIES INC.

WINDOW & VENTS GROUP (CONTINUED)

COMPONENT PARTS FOR WINDOW & VENT LAYOUT (CONTINUED)

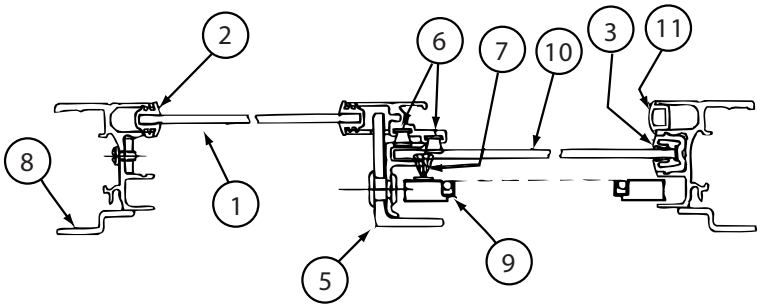

CROSS SECTION B-B

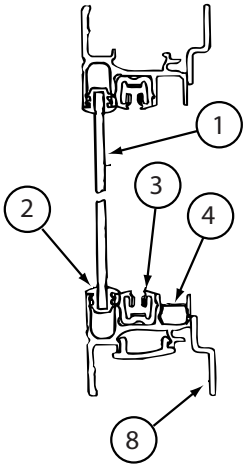

CROSS SECTION A-A

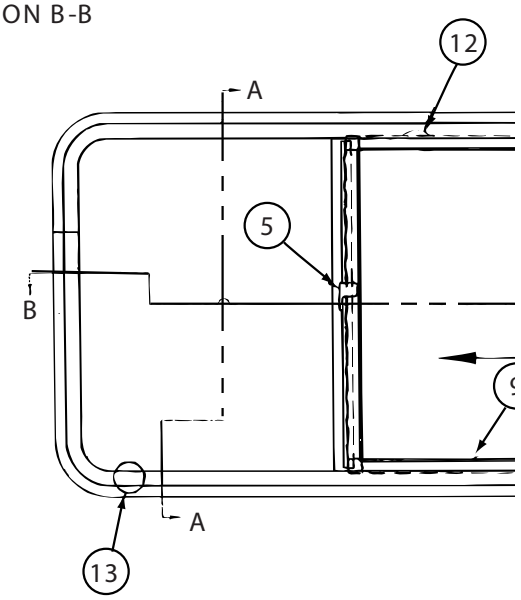

098647-74-01A

KEY	PART NUMBER	U/M	DESCRIPTION	VENDOR NO.
1	098647-68-701	EA	GLASS - STATIONARY	096-029585
2	098644-01-705	FT	GLAZING - STRIP	132-010231
3	098644-01-708	FT	CHANNEL - RUN PIERCED	122-016543
4	098644-01-710	FT	TRACK - SCREEN SPACER 12'	132-017135
5	098644-01-700	EA	LATCH - REPAIR KIT (BLACK)	B801-CK
6	098644-01-706	FT	WEATHERSTRIP - GLASS	171-010668
7	098644-01-711	FT	WEATHERSTRIP - SCREEN BLACK	171-016965
8	098647-47-704	EA	RETAINER - TRIM	H493-66
9	098647-47-702	EA	SCREEN ASM - W/SEALS & CLIPS	410-025226
10	098647-74-700	EA	GLASS SLIDING W/SASH & LATCH	H493C8
11	098644-01-716	FT	PLUG - FILLER	132-014470
12	125582-01-701	EA	CLIP - SCREEN - PLASTIC	130-005153
13	098644-01-719	EA	STOP - SLIDER GLASS	132-014203

COPYRIGHT © 2006 WINNEBAGO INDUSTRIES INC.

WINDOW & VENTS GROUP (CONTINUED)

COMPONENT PARTS FOR WINDOW & VENT LAYOUT (CONTINUED)

122882-01-01A

KEY	PART NUMBER	U/M	DESCRIPTION	VENDOR NO.
	009440-01-000	EA	GEAR-ARM-ROOF VENT	705221K38
	064470-01-700	EA	COVER - VENT	J7291
	064470-01-701	EA	SLIDE BAR - VENT LID	JRP1291B
	122882-01-700	EA	HANDLE - CRANK - BLACK	90128
	122882-01-701	EA	SCREEN	JRP-1124-B
	122882-01-702	EA	HANDLE - CRANK - WHITE	JRP1031B

122882-02-01A, 122882-03-01A

KEY	PART NUMBER	U/M	DESCRIPTION	VENDOR NO.
	009440-01-000	EA	GEAR-ARM-ROOF VENT	705221K38
	048648-01-000	EA	MOTOR-12V NONVENTED 1/8 SFT	JRP2190 CSA W/RESIS
	048649-01-000	EA	FAN-PLAS-6 IN 6 BLADED	1976 PWR ROOF VENT
	064470-01-700	EA	COVER - VENT	J7291
	064470-01-701	EA	SLIDE BAR - VENT LID	JRP1291B
	110051-03-700	EA	SWITCH-BLACK/PUSH BUTTON	27-0164
	122882-01-700	EA	HANDLE - CRANK - BLACK	90128
	122882-01-701	EA	SCREEN	JRP-1124-B
	122882-01-702	EA	HANDLE - CRANK - WHITE	JRP1031B

COPYRIGHT © 2006 WINNEBAGO INDUSTRIES INC.

WINDOW & VENTS GROUP (CONTINUED)

COMPONENT PARTS FOR WINDOW & VENT LAYOUT (CONTINUED)

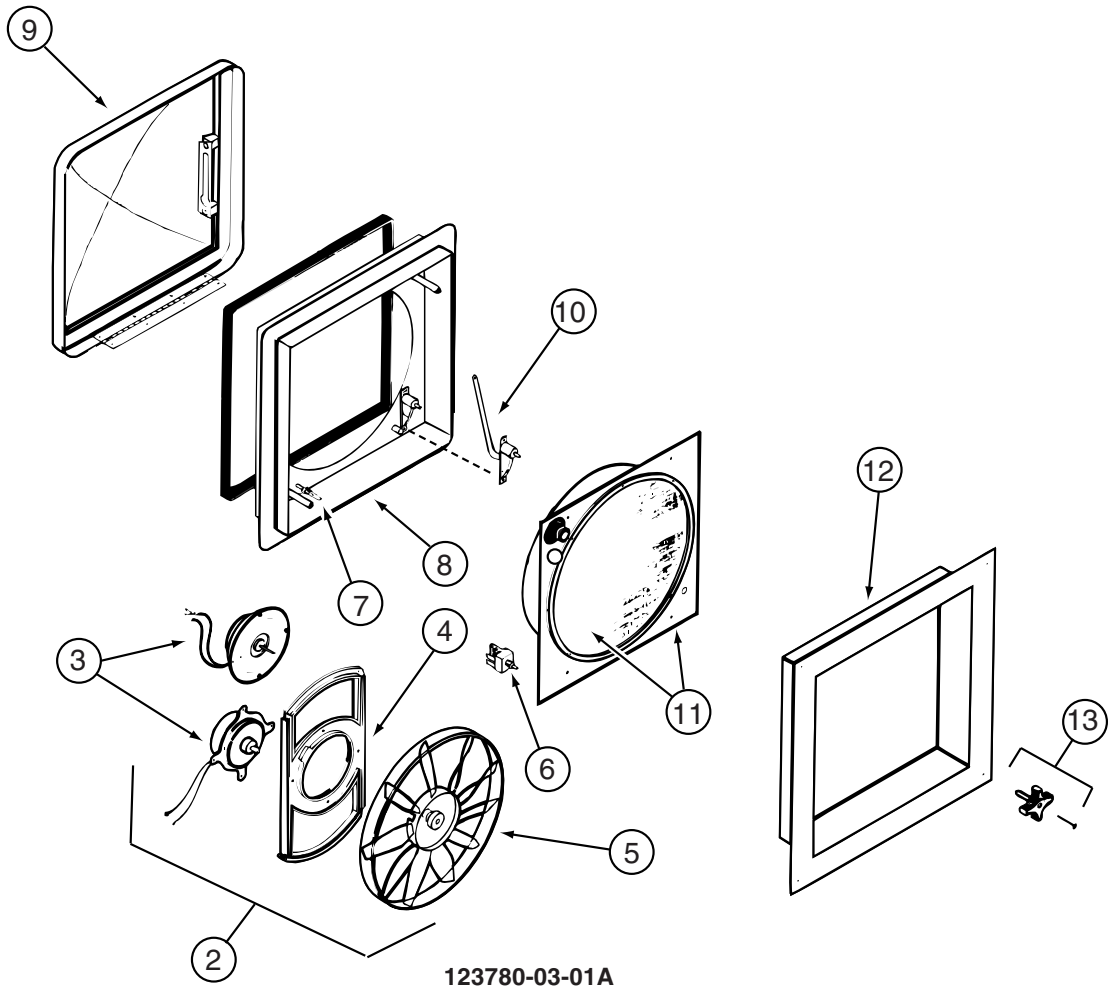

123780-03-01A

KEY	PART NUMBER	U/M	DESCRIPTION	VENDOR NO.
2	084079-11-700	EA	MOTOR & FAN BLADE W/BRACKET	K4017-09
3	084079-01-705	EA	MOTOR/EXT BRKT/FAN BLADE KIT	1080-00
4	084079-01-711	EA	MOTOR MOUNT (BOWTIE)	1015-00
5	084079-01-704	EA	BLADE-FAN	1138-00
6	084079-01-709	EA	SWITCH - MAIN - 3 SPEED	1031-05
7	084079-01-707	EA	SWITCH - SAFETY	1122-05
8	123780-05-700	EA	BASE/MAIN-BRT WHT W/GASKET	1010-81
9	123780-01-700	EA	COVER - VENT W/HINGE & SLIDE	1020K-81
11	123780-03-701	EA	SCREEN ASM 78-100MM W/SWITCH	1030BT-81
12	123780-03-700	EA	GARNISH - INT. 3"-4" BRT/WHT	2040-81
13	084079-01-703	EA	KNOB-LIFT	1140K-00
	084079-01-706	EA	PLUG, 12 VOLT	1090
	123780-01-702	EA	SCREEN INSERT (SCREEN RING)	K1035-81
			CONTACT WINNEBAGO PART SALES FOR UNLISTED COMPONENT(S)	

COPYRIGHT © 2006 WINNEBAGO INDUSTRIES INC.

WINDOW & VENTS GROUP (CONTINUED)

COMPONENT PARTS FOR WINDOW & VENT LAYOUT (CONTINUED)

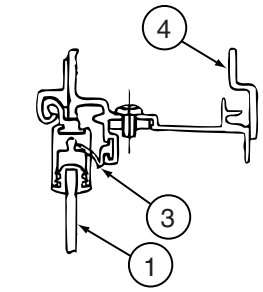

CROSS SECTION D-D

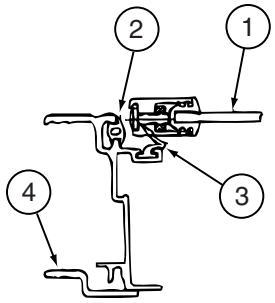

CROSS SECTION A-A

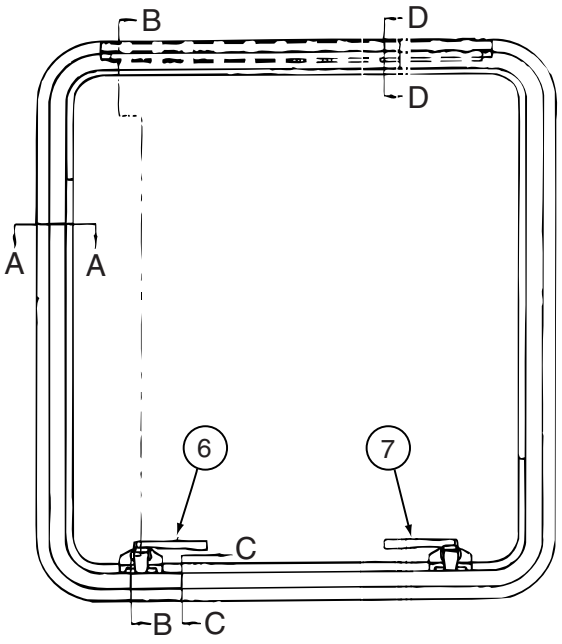

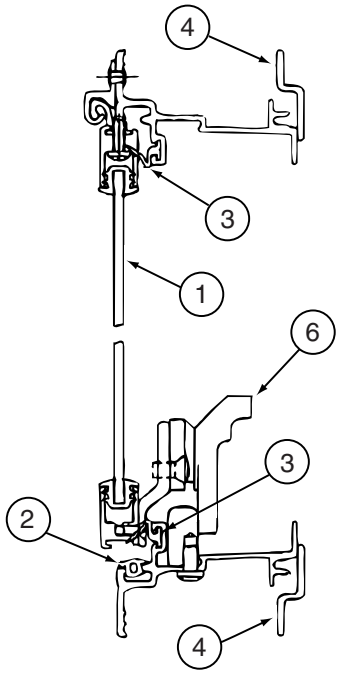

CROSS SECTION B-B

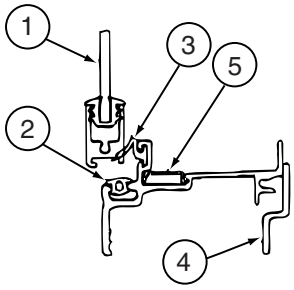

CROSS SECTION C-C

151075-02-01A

KEY	PART NUMBER	U/M	DESCRIPTION	VENDOR NO
1	151075-02-700	EA	GLASS-STATIONARY-SUB ASM	H955G9
2	116976-01-702	FT	FILLER PLUG	132-016065
3	100322-01-701	FT	SEAL-VENT	122-016071
4	151075-02-701	EA	RETAINER - TRIM	H955-53
5	108929-01-706	EA	COVER - DRAIN SLOT	132-016064
6	137867-05-707	EA	LOCK/CAM - LEFT	182-011294
7	137867-05-706	EA	LOCK/CAM - RIGHT	182-011293

COPYRIGHT © 2006 WINNEBAGO INDUSTRIES INC.