2006
SUNCRUISER
IPG35U
G-SERIES

PORTSMOUTH OAK
T89 WINTER WHEAT
T93 SILVER SAGE
T97 CAVALIER

CONCERT CHERRY
T90 WINTER WHEAT
T94 SILVER SAGE
T98 CAVALIER

WASHED MAPLE
T91 WINTER WHEAT
T95 SILVER SAGE
T99 CAVALIER

SIERRA MAPLE
T92 WINTER WHEAT
T96 SILVER SAGE
T00 CAVALIER

DASH ACCENT COLORS
T89,T90,T91,T92,T93,T94,T95,T96-RIVERSTONE
T97,T98,T99,T00-CASHEMERE

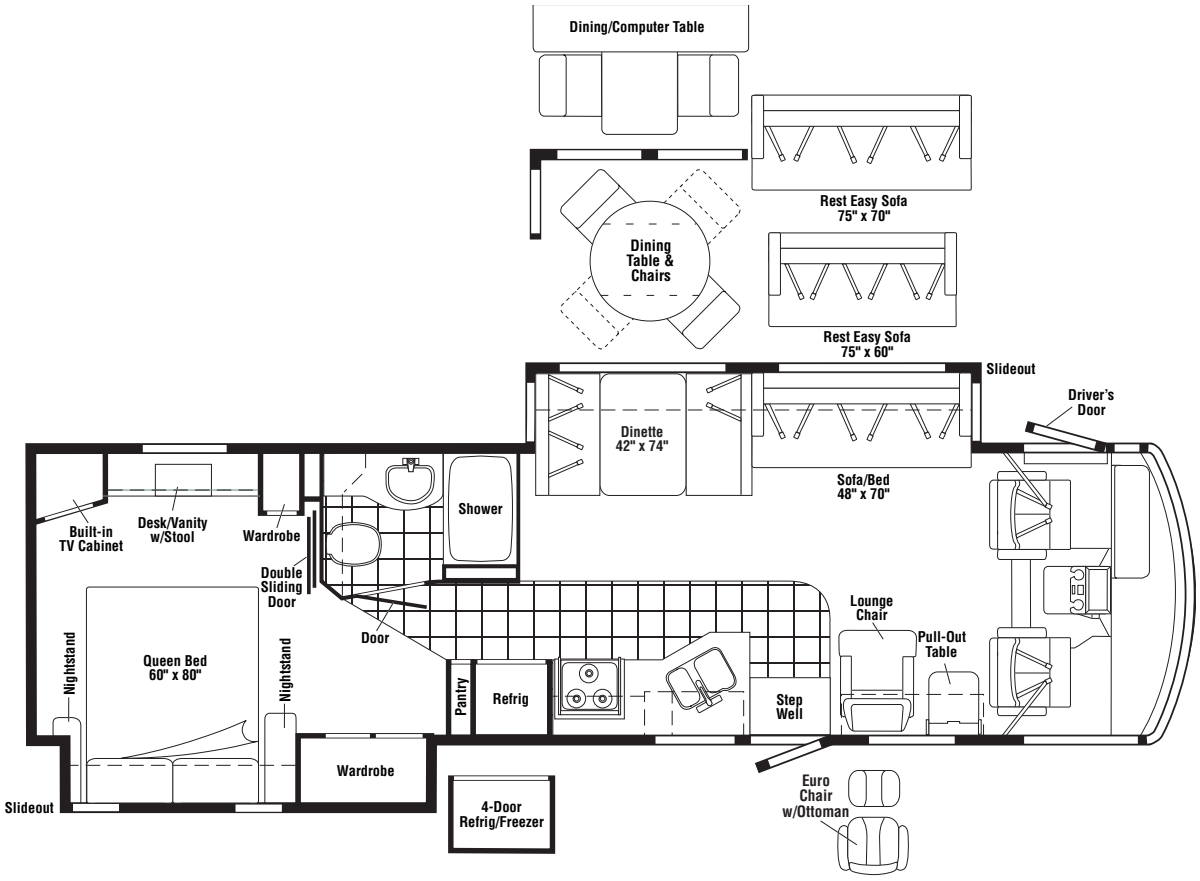

FLOORPLAN

COPYRIGHT © 2006 WINNEBAGO INDUSTRIES INC.

CONTENTS

FLOORPLAN 1
ACCESSORIES GROUP 6
OPERATORS MANUAL 6
AUDIO VIDEO GROUP 7
RADIO SYSTEM 7
REAR MONITOR 7
CABINET & APPLIANCE GROUP 8
CABINET & APPLIANCE LAYOUT 8
COMPONENT PARTS FOR CABINET & APPLIANCE LAYOUT 28
119267-12-02A 28
120075-16-01A, 120075-17-01A, 120075-18-01A, 120075-19-01A, 120075-21-01A, 122075-22-01A 28
125242-03-01A 34
126022-01-01A, 126022-02-01A, 126022-03-01A 43
135065-03-01A, 135065-03-03A, 135065-04-01A 44
151277-03-01A, 151279-01-01A, 151279-02-01A/02A, 151279-03-01A 46
CHASSIS GROUP 50
FRAME 50
FRONT END 52
DRIVETRAIN 54
EXHAUST 55
FUEL 59
HYDRAULIC LEVELING 61
COMPONENT PARTS FOR HYDRAULIC LEVELING 62
100536-57-000 62
100536-60-000 62
128571-07-000 62
144226-32-000 62
144226-40-000 62
144226-47-000 63
153452-01-000 63
153452-06-000 63
153452-07-000 64
153452-08-000 64
WHEEL, TIRE, COVERS &/OR LINERS 65
COMPONENT PARTS FOR WHEEL, TIRE, COVERS &/OR LINERS 65
145580-02-000 65
150723-01-000 65
BRAKE 65
BRAKELINE 65
CURTAIN & CUSHION GROUP 66
NOTICE 66
CUSHION LAYOUT 67
BUCKET SEATS 69
COMPONENT PARTS FOR BUCKET SEATS 70
122611-02-000 70
LOUNGE CHAIR 71
SOFA 72
COMPONENT PARTS FOR SOFA 77
148226-01-000, 148226-02-000, 148226-03-000 77
WINDOW TREATMENT 78
HARDWARE 80
ACCESSORIES 82
FABRICS 82
DRIVERS COMPARTMENT GROUP 85
DASH 85
MOTOR COVER 87
BEVERAGE TRAY 88
FRONT INTERIOR 89
COMPONENT PARTS FOR FRONT INTERIOR 95
091990-08-01A 95
147767-01-000, 147767-02-000 95
CABINETS 96

COPYRIGHT © 2006 WINNEBAGO INDUSTRIES INC.

CONTENTS (CONTINUED)

ELECTRICAL GROUP 99
110V BODY WIRING 99
12V BODY WIRING 101
EXTERIOR LAMPS 108
FRONT END 110
FRONT TV/VCR 113
SIDE TV/VCR 114
COMPONENT PARTS FOR WIRING 118
076319-23-000 118
076319-25-000 118
086280-01-000 119
087694-01-000 119
093575-23-03A 119
093575-33-03A 119
097917-01-06A 119
108354-01-01A 119
121935-01-01A 119
123775-01-02A 119
133004-05-01A 120
133068-01-000 120
136119-01-000 121
137135-02-000 122
137417-01-01A, 137417-03-01A 123
137417-06-01A 123
137424-01-000 123
141454-03-01A 123
146298-02-000 124
146299-02-000 124
148231-01-000 124
149040-02-000 124
149049-01-000,149049-02-000 124
153464-01/02/04/05-01A 124
153464-03/06-01A 124
154548-01-000 124
155619-01-000 124
CIRCUIT BREAKERS, FUSES & RELAYS 125
CONVERTER, INVERTER & LOAD CENTER 126
BOXES & CORDS 127
WIRE ASSEMBLIES 127
CONNECTORS & CONDUIT 128
CHASSIS 130
EXTERIOR BODY GROUP 131
GRAPHICS & PAINT 131
PANELS & TRIMS 135
COMPONENT PARTS FOR PANELS & TRIMS 138
142721-01-01A, 142721-02-01A 138
142721-01-02A, 142721-02-02A 138
FRONT END 139
LADDER 140
STRUCTURAL COMPONENTS 141
AWNINGS 141
COMPONENT PARTS FOR AWNINGS 144
113874-01-02A 144

COPYRIGHT © 2006 WINNEBAGO INDUSTRIES INC.

CONTENTS (CONTINUED)

EXTERIOR DOORS & COMPARTMENTS GROUP 145
DOOR & COMPARTMENT LAYOUT 145
COMPENENT PARTS FOR DOOR & COMPARTMENT LAYOUT 151
084103-08-000 151
110506-A1-000, 110506-A2-000, 110506-26-000, 110506-27-000, 110506-36-000 151
142226-02-01A 151
143709-01-01A 151
143709-02-01A 151
COMPARTMENT DOOR PIECE PARTS 152
DRIVERS 154
COMPONENT PARTS FOR DRIVERS 155
125581-09-01A 155
ENTRY 157
SCREEN 158
LATCH - ENTRY 159
EXTERIOR SLIDEOUT GROUP 160
FRONT LEFT 160
COMPONENT PARTS FOR FRONT LEFT 164
100536-58-000 164
143625-03-000 164
152314-01-000, 152314-02-000 164
RIGHT REAR 165
COMPONENT PARTS FOR RIGHT REAR 169
100536-59-000 169
128599-02-000 169
128599-05-000 169
GENERATOR GROUP 170
GAS 170
HEATING & A/C GROUP 171
AUTOMOTIVE 171
COMPONENT PARTS FOR AUTOMOTIVE 173
103930-44-000 173
103930-45-000 173
103930-46-000 173
103930-47-000 173
103930-49-000 173
103930-55-000 175
FURNACE 176
COMPONENT PARTS FOR FURNACE 177
143563-01-000 177
143563-02-000 179
REAR HEATER 181
CENTRAL 182
COMPONENT PARTS FOR CENTRAL 183
105620-12-000 183
INTERIOR FINISH GROUP 185
MOLDINGS & TRIMS 185
PANELING & LAMINATES 194
INTERIOR TRIM LAYOUT 196
COMPONENT PARTSFOR INTERIOR TRIM LAYOUT 203
094499-02-000 203
115011-03-02A 204
FLOOR COVERINGS 205
HARDWARE 206
LABELS GROUP 212
LP GROUP 218
LP SYSTEM 218
COMPONENT PARTS FOR LP SYSTEM 218
144116-01-000 218

COPYRIGHT © 2006 WINNEBAGO INDUSTRIES INC.

CONTENTS (CONTINUED)

SEALANTS & FASTENERS GROUP 219
SEALANTS & ADHESIVES 219
BOLTS, NUTS AND WASHERS 220
SCREWS 222
CLAMPS, CLIPS, GROMMETS, RIVETS & PLUGS 224
MISCELLANEOUS FASTENERS 226
WATER & SEWAGE GROUP 227
DRAINAGE SYSTEM 227
COMPONENT PARTS FOR DRAINAGE SYSTEM 229
062415-01-000 229
144728-01-000 229
152830-01-01A 229
WATER SYSTEM 230
COMPONENT PARTS FOR WATER SYSTEM 236
075241-04-000, 075241-05-000, 075241-06-000 236
098607-01-000 236
103635-01-000 236
123744-03-01A 236
125420-01-02A, 125420-01-03A, 125420-03-03A, 125420-04-03A 236
129390-03-02A 236
144215-01-000 237
144215-02-000 237
144596-01-01A 237
145541-01-000 238
WINDOW & VENTS GROUP 239
WINDOW & VENT LAYOUT 239
COMPONENT PARTS FOR WINDOW & VENT LAYOUT 240
123780-10-01A 240
150648-04-01A 241
150648-07-01A 242
150648-10-01A 242
150649-08-01A 243
150649-18-01A 243
150649-19-01A 243
150651-07-01A 244
150656-02-01A 245
150656-05-01A 246
150656-10-01A 246
151072-01-01A 247
151073-01-01A 248
151074-01-01A 248
WINDSHIELD & WIPER GROUP 249
WINDSHIELD 249
WIPER 250
COMPONENT PARTS FOR WIPER 250
149401-01-000,149401-02-000 250
149402-01-000 & 149402-02-000 250
149402-03-000 & 149402-04-000 250

COPYRIGHT © 2006 WINNEBAGO INDUSTRIES INC.

ACCESSORIES GROUP

OPERATORS MANUAL

KEY	PART NUMBER	U/M	DESCRIPTION
	152835-01-000	DW	TOP LEVEL-G,2006
	129079-01-01A	EA	CASE - VINYL/BLACK-EXPANDABLE ACCORDION SIDES-7"WX9"HX14"L
	132000-15-006	EA	MANUAL/OWNER - SUNCRUISER - 2006
	155005-15-006	EA	MANUAL/OWNER - SUPPLEMENT - VOLUME I - SUNCRUISER - 2006
	155005-43-006	EA	MANUAL/OWNER - SUPPLEMENT - VOLUME II - SUNCRUISER - 2006

COPYRIGHT © 2006 WINNEBAGO INDUSTRIES INC.

AUDIO VIDEO GROUP

RADIO SYSTEM

KEY	PART NUMBER	U/M	DESCRIPTION
	135420-07-000	EA	MOUNTING KIT - RADIO - A-BODY
	135420-10-000	EA	REMOTE CONTROL/RADIO (CREDIT CARD SIZE) FROM: 00-00-00 THRU: 05-29-05
	135420-19-000	EA	REMOTE CONTROL/RADIO (CREDIT CARD SIZE) FROM: 05-30-05 THRU: 99-99-99
	135420-11-000	EA	REMOTE CONTROL/RADIO (STEERING WHEEL MOUNT) FROM: 00-00-00 THRU: 05-29-05
	135420-18-000	EA	REMOTE CONTROL/RADIO (STEERING WHEEL MOUNT) FROM: 05-30-05 THRU: 99-99-99
	135420-13-000	EA	RADIO-AM/FM/CASS/CD COMBO-AUX/CD CHANGER INPUT-IR REMOTE FROM: 00-00-00 THRU: 05-29-05
	135420-15-000	EA	RADIO-AM/FM/CD/SIRIUS SATELLITE READY/IR REMOTE FROM: 05-30-05 THRU: 99-99-99
	135420-14-000	EA	RECEIVER (EYE) - INFRARED
	135420-12-000	EA	REMOTE CONTROL/RADIO-STEERING WHEEL MT W/BUTTON CD CHANGER - CD CHANGER
	148134-01-000	EA	CHANGER - COMPACT DISC - SANYO EAX-510 - CD CHANGER
	151935-01-000	EA	RADIO/CB - 40 CHANNEL - COBRA C75W

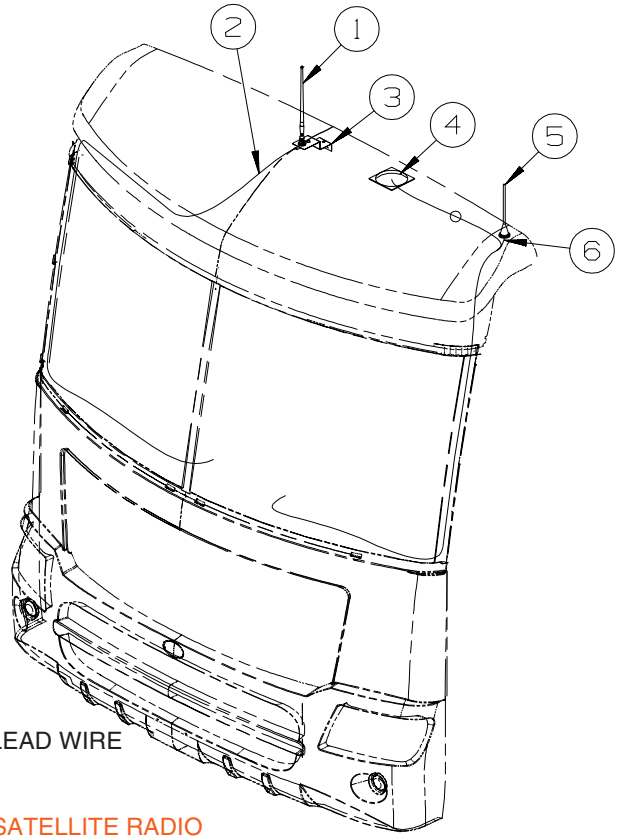

KEY	PART NUMBER	U/M	DESCRIPTION
1	090944-02-000	EA	ANTENNA - RADIO - 16" RUBBER - W/O LEAD WIRE
2	090944-03-000	EA	CABLE - ANTENNA
3	115916-01-01B	EA	BRACKET - ANTENNA MOUNT
4	152780-01-000	EA	ANTENNA/SATELLITE - RADIO/SIRIUS - SATELLITE RADIO FROM: 00-00-00 THRU: 12-11-05
4	158494-01-000	EA	ANTENNA/SATELLITE - RADIO/SIRIUS - SATELLITE RADIO FROM: 12-12-05 THRU: 99-99-99
5	123256-01-000	EA	ANTENNA - CB - W/O CABLE
6	123256-02-000	EA	CABLE - CB - COAX

REAR MONITOR

KEY	PART NUMBER	U/M	DESCRIPTION
	143363-05-000	EA	CAMERA/REAR - COLOR W/BRACKET - SONY VCB-MH3
	143363-03-000	EA	CABLE - MONITOR/CAMERA - COLOR - SONY VCB-MHC20
	143363-01-000	EA	MONITOR/REAR - COLOR - W/BRACKET - SONY VCB-MH1
	117420-01-000	EA	CABLE - W/MALE RCA ENDS - SHIELDED - 12" - VIDEO CAMERA SYSTEM
	148112-01-000	EA	CABLE - MONITOR - SONY AUX - VIDEO CAMERA SYSTEM
	156655-01-000	EA	SWITCH BOX - VIDEO CAMERA - TURN SIGNAL ACTIVATED - VIDEO CAMERA SYSTEM
	156655-02-01A	EA	CAMERA - REAR VIEW/PASSENGER SIDE - WHITE - VIDEO CAMERA SYSTEM
	156655-03-01A	EA	CAMERA - REAR VIEW/DRIVER SIDE - WHITE - VIDEO CAMERA SYSTEM
	156655-04-000	EA	CABLE - MONITOR/CAMERA - 15'(SIDE CAMERA TO VIDEO SWITCH) - VIDEO CAMERA SYSTEM

COPYRIGHT © 2006 WINNEBAGO INDUSTRIES INC.

CABINET & APPLIANCE GROUP

CABINET & APPLIANCE LAYOUT

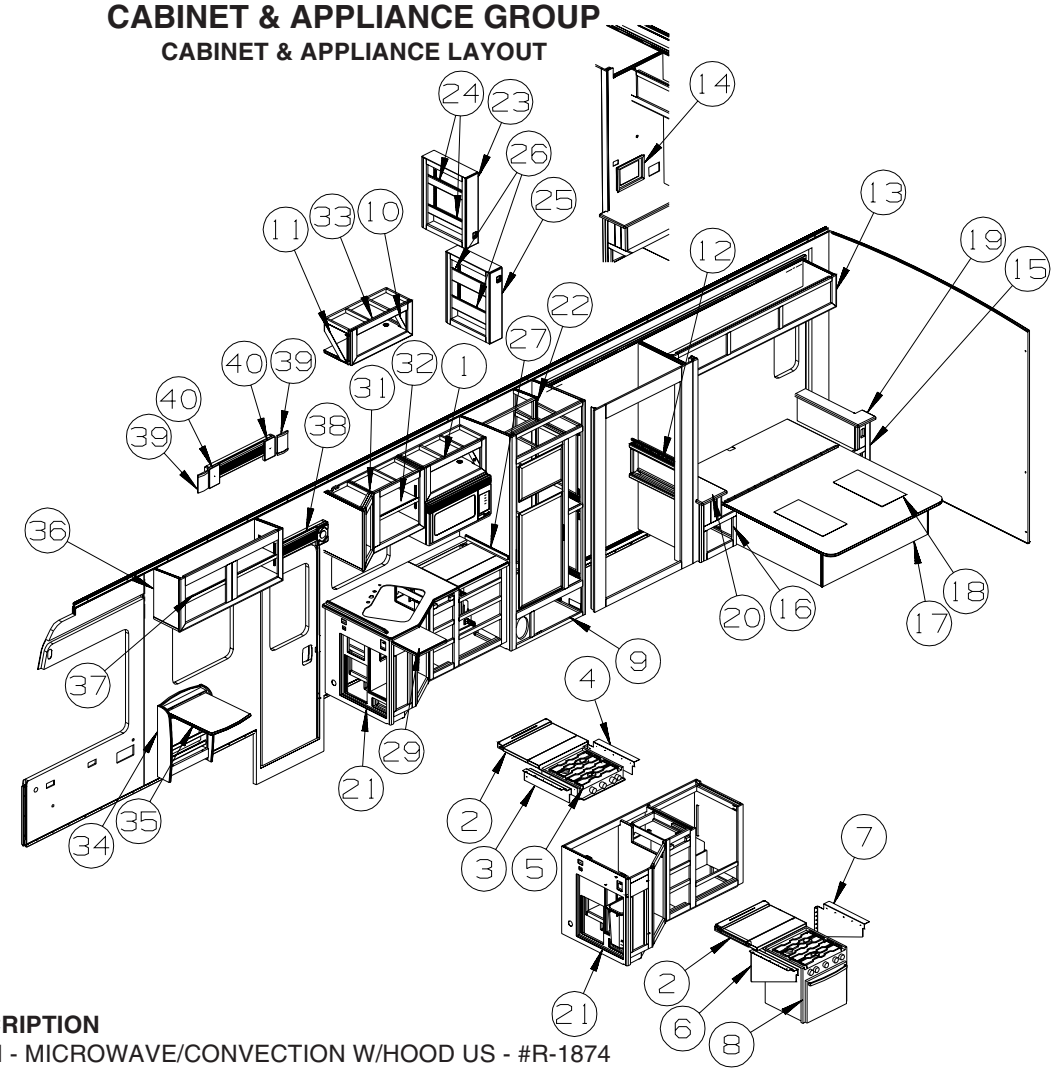

KEY	PART NUMBER	U/M	DESCRIPTION
1*	119267-12-02A	EA	OVEN - MICROWAVE/CONVECTION W/HOOD US - #R-1874
2*	126022-01-01A	EA	COVER/RANGE - BI-FOLD - 22" - BLACK TEXTURED
3	106936-35-04B	EA	BRACKET - TIEDOWN - RANGE/FRONT - BLACK
4	106936-36-04B	EA	BRACKET - TIEDOWN - RANGE/REAR - BLACK
5*	135065-03-03A	EA	RANGE-3 BURNER (SEALED)-W/O OVEN-NEW STYLE KNOBS-STAINLESS
6	136382-05-04B	EA	BRACKET - TIEDOWN - OVEN/FRONT - BLACK - RANGE W/OVEN
7	136382-06-04B	EA	BRACKET - TIEDOWN - OVEN/REAR - BLACK - RANGE W/OVEN
8*	151279-02-02A	EA	RANGE-22"-3 BRNR/SLD-MERCURY FREE-SST DOOR/GLASS - RANGE W/OVEN
9*	120075-21-01A	EA	REFRIGERATOR-LARGE DOUBLE SST DOOR/RH/RAISED HANDLE(WINN)
9*	120075-16-01A	EA	REFRIG-LARGE DBL SST DR/RH/RAISED HANDLE(WINN) - REFRIG W/ICE MAKER
9*	125242-03-01A	EA	REFRIGERATOR - 4 DOOR - W/ICE MAKER - STAINLESS STEEL - 4 DOOR REFRIG
	116751-05-01A	EA	TRAY - REFRIGERATOR - BLACK
	118871-02-01A	EA	TRAY - REFRIGERATOR - SIDE/SIDE - BLACK - 34.4" LONG - 4 DOOR REFRIG
	054450-01-000	EA	LEVEL - REFRIGERATOR
10	152316-01-02B	EA	BRACKET/SUPPORT - MICROWAVE - E-COATED
11	152316-02-02B	EA	BRACKET/SUPPORT - MICROWAVE - E-COATED
12	150415-02-S76	EA	CABINET - RADIO COVER - PORTSMOUTH OAK
12	150415-02-S77	EA	CABINET - RADIO COVER - CONCERT CHERRY
12	150415-02-S78	EA	CABINET - RADIO COVER - WASHED MAPLE
12	150415-02-S79	EA	CABINET - RADIO COVER - SIERRA MAPLE
13	155395-01-T77	EA	CABINET - OVERHEAD/REAR/RIGHT HAND - W/O DOORS/HDW - PORTSMOUTH OAK
13	155395-01-T78	EA	CABINET - OVERHEAD/REAR/RIGHT HAND - W/O DOORS/HDW - CONCERT CHERRY
13	155395-01-T79	EA	CABINET - OVERHEAD/REAR/RIGHT HAND - W/O DOORS/HDW - WASHED MAPLE
13	155395-01-T80	EA	CABINET - OVERHEAD/REAR/RIGHT HAND - W/O DOORS/HDW - SIERRA MAPLE
13	155395-02-T77	EA	CABINET - OVERHEAD/REAR/RIGHT HAND - W/O DOORS/HDW - PORTSMOUTH OAK - REAR STEREO
13	155395-02-T78	EA	CABINET - OVERHEAD/REAR/RIGHT HAND - W/O DOORS/HDW - CONCERT CHERRY - REAR STEREO
13	155395-02-T79	EA	CABINET - OVERHEAD/REAR/RIGHT HAND - W/O DOORS/HDW - WASHED MAPLE - REAR STEREO
13	155395-02-T80	EA	CABINET - OVERHEAD/REAR/RIGHT HAND - W/O DOORS/HDW - SIERRA MAPLE - REAR STEREO
14	137602-E5-S64	EA	POCKET - RADIO - PORTSMOUTH OAK - PORTSMOUTH OAK
14	137602-E5-S65	EA	POCKET - RADIO - CHERRY - CONCERT CHERRY
14	137602-E5-S66	EA	POCKET - RADIO - WASHED MAPLE
14	137602-E5-S67	EA	POCKET - RADIO - SIERRA MAPLE

COPYRIGHT © 2006 WINNEBAGO INDUSTRIES INC.

CABINET & APPLIANCE GROUP (CONTINUED)

CABINET & APPLIANCE LAYOUT (CONTINUED)

KEY	PART NUMBER	U/M	DESCRIPTION
15	136885-A5-P45	EA	CABINET - NIGHTSTAND/RH - W/O CTRTP/DOOR/DWR/HDW - PORTSMOUTH OAK
15	136885-A5-P46	EA	CABINET - NIGHTSTAND/RH - W/O CTRTP/DOOR/DWR/HDW - CONCERT CHERRY
15	136885-A5-RW4	EA	CABINET - NIGHTSTAND/RH - W/O CTRTP/DOOR/DWR/HDW - WASHED MAPLE
15	136885-A5-S67	EA	CABINET - NIGHTSTAND/RH - W/O CTRTP/DOOR/DWR/HDW - SIERRA MAPLE
16	136885-A6-P45	EA	CABINET - NIGHTSTAND/LH - W/O CTRTP/DOOR/DWR/HDW - PORTSMOUTH OAK
16	136885-A6-P46	EA	CABINET - NIGHTSTAND/LH - W/O CTRTP/DOOR/DWR/HDW - CONCERT CHERRY
16	136885-A6-RW4	EA	CABINET - NIGHTSTAND/LH - W/O CTRTP/DOOR/DWR/HDW - WASHED MAPLE
16	136885-A6-S67	EA	CABINET - NIGHTSTAND/LH - W/O CTRTP/DOOR/DWR/HDW - SIERRA MAPLE
17	137406-04-N52	EA	BEDBOARD - W/HINGE/T-MOLDING/SLIPNOT - FLIP-UP
	096764-02-000	FT	SLIPNOT - ANTISLIP - 1'WIDE (180' ROLLS) - WHITE
18	142515-01-R38	EA	CABINET/BASE - QUEEN BED - W/O DOOR/HARDWARE - PORTSMOUTH OAK
18	142515-01-R39	EA	CABINET/BASE - QUEEN BED - W/O DOOR/HARDWARE - CONCERT CHERRY
18	142515-01-RW4	EA	CABINET/BASE - QUEEN BED - W/O DOOR/HARDWARE - WASHED MAPLE
18	142515-01-S67	EA	CABINET/BASE - QUEEN BED - W/O DOOR/HARDWARE - SIERRA MAPLE
19	145182-38-T89	EA	COUNTERTOP - LAMINATED - PORTSMOUTH OAK
19	145182-38-T90	EA	COUNTERTOP - LAMINATED - CONCERT CHERRY
19	145182-38-T91	EA	COUNTERTOP - LAMINATED - WASHED MAPLE
19	145182-38-T92	EA	COUNTERTOP - LAMINATED - SIERRA MAPLE
20	145182-37-T89	EA	COUNTERTOP - LAMINATED - PORTSMOUTH OAK
20	145182-37-T90	EA	COUNTERTOP - LAMINATED - CONCERT CHERRY
20	145182-37-T91	EA	COUNTERTOP - LAMINATED - WASHED MAPLE
20	145182-37-T92	EA	COUNTERTOP - LAMINATED - SIERRA MAPLE
21	P51959-03-T77	EA	CABINET - GALLEY - W/O CNTRTP/DRS/DRWRS/HDW - PORTSMOUTH OAK
21	P51959-03-T78	EA	CABINET - GALLEY - W/O CNTRTP/DRS/DRWRS/HDW - CONCERT CHERRY
21	P51959-03-T79	EA	CABINET - GALLEY - W/O CNTRTP/DRS/DRWRS/HDW - WASHED MAPLE
21	P51959-03-T80	EA	CABINET - GALLEY - W/O CNTRTP/DRS/DRWRS/HDW - SIERRA MAPLE
21	P51959-01-T77	EA	CABINET - GALLEY - W/O CNTRTP/DRS/DRWRS/HDW - PORTSMOUTH OAK - 2-WAY RADIO
21	P51959-01-T78	EA	CABINET - GALLEY - W/O CNTRTP/DRS/DRWRS/HDW - CONCERT CHERRY - 2-WAY RADIO
21	P51959-01-T79	EA	CABINET - GALLEY - W/O CNTRTP/DRS/DRWRS/HDW - WASHED MAPLE - 2-WAY RADIO
21	P51959-01-T80	EA	CABINET - GALLEY - W/O CNTRTP/DRS/DRWRS/HDW - SIERRA MAPLE - 2-WAY RADIO
21	P51959-04-T77	EA	CABINET - GALLEY - W/O CNTRTP/DRS/DRWRS/HDW - PORTSMOUTH OAK - RANGE W/OVEN
21	P51959-04-T78	EA	CABINET - GALLEY - W/O CNTRTP/DRS/DRWRS/HDW - CONCERT CHERRY - RANGE W/OVEN
21	P51959-04-T79	EA	CABINET - GALLEY - W/O CNTRTP/DRS/DRWRS/HDW - WASHED MAPLE - RANGE W/OVEN
21	P51959-04-T80	EA	CABINET - GALLEY - W/O CNTRTP/DRS/DRWRS/HDW - SIERRA MAPLE - RANGE W/OVEN
21	P51959-02-T77	EA	CBNT- GLY- W/O CNTRTP/DRS/DRWRS/HDW - PORTSMOUTH OAK - RANGE W/OVEN/2-WAY RADIO
21	P51959-02-T78	EA	CBNT- GLY- W/O CNTRTP/DRS/DRWRS/HDW - CONCERT CHERRY - RANGE W/OVEN/2-WAY RADIO
21	P51959-02-T79	EA	CBNT- GLY- W/O CNTRTP/DRS/DRWRS/HDW - WASHED MAPLE - RANGE W/OVEN/2-WAY RADIO
21	P51959-02-T80	EA	CBNT- GLY- W/O CNTRTP/DRS/DRWRS/HDW - SIERRA MAPLE - RANGE W/OVEN/2-WAY RADIO
	109506-12-000	EA	FILM/ABRASION-RESISTANT - TRANSPARENT - 1" DIA.
22	090329-01-000	FT	SEAL - "T" - REFRIGERATOR CABINET
23	153343-01-SD0	EA	CABINET - PANTRY/SLIDE - W/O DRS/DRWRS/HDW - PORTSMOUTH OAK
23	153343-01-SD1	EA	CABINET - PANTRY/SLIDE - W/O DRS/DRWRS/HDW - CONCERT CHERRY
23	153343-01-SD2	EA	CABINET - PANTRY/SLIDE - W/O DRS/DRWRS/HDW - WASHED MAPLE
23	153343-01-S67	EA	CABINET - PANTRY/SLIDE - W/O DRS/DRWRS/HDW - SIERRA MAPLE
24	153343-21-SD0	EA	SHELF - W/WOOD MOLDING - PORTSMOUTH OAK
24	153343-21-SD1	EA	SHELF - W/WOOD MOLDING - CONCERT CHERRY
24	153343-21-SD2	EA	SHELF - W/WOOD MOLDING - WASHED MAPLE
24	153343-21-S67	EA	SHELF - W/WOOD MOLDING - SIERRA MAPLE
25	153343-03-SD0	EA	CABINET - PANTRY/SLIDE - W/O DRS/DRWRS/HDW - PORTSMOUTH OAK
25	153343-03-SD1	EA	CABINET - PANTRY/SLIDE - W/O DRS/DRWRS/HDW - CONCERT CHERRY
25	153343-03-SD2	EA	CABINET - PANTRY/SLIDE - W/O DRS/DRWRS/HDW - WASHED MAPLE
25	153343-03-S67	EA	CABINET - PANTRY/SLIDE - W/O DRS/DRWRS/HDW - SIERRA MAPLE
26	153343-27-SD0	EA	SHELF - W/WOOD MOLDING - PORTSMOUTH OAK
26	153343-27-SD1	EA	SHELF - W/WOOD MOLDING - CONCERT CHERRY
26	153343-27-SD2	EA	SHELF - W/WOOD MOLDING - WASHED MAPLE
26	153343-27-S67	EA	SHELF - W/WOOD MOLDING - SIERRA MAPLE
27	130813-04-06A	EA	BACKSPLASH-SIDE-GALLEY CTRTP-1/2" VENDURA-OATMEAL
28	130816-06-08A	EA	COUNTERTOP/STOVE LID - 1/4" VENDURA - OATMEAL
28	149094-02-05A	EA	COVER/STOVE TOP - 1/4" VENDURA - OATMEAL
29	141784-01-05A	EA	COUNTERTOP EXTENSION - 1/4"VENDURA - OATMEAL
30	149086-09-05A	EA	COUNTERTOP - 1/4" VENDURA - OATMEAL
31	151961-01-T89	EA	CABINET - OVERHEAD/GALLEY - W/O DOORS/HDW - PORTSMOUTH OAK
31	151961-01-T90	EA	CABINET - OVERHEAD/GALLEY - W/O DOORS/HDW - CONCERT CHERRY
31	151961-01-T91	EA	CABINET - OVERHEAD/GALLEY - W/O DOORS/HDW - WASHED MAPLE

COPYRIGHT © 2006 WINNEBAGO INDUSTRIES INC.

CABINET & APPLIANCE GROUP (CONTINUED)

CABINET & APPLIANCE LAYOUT (CONTINUED)

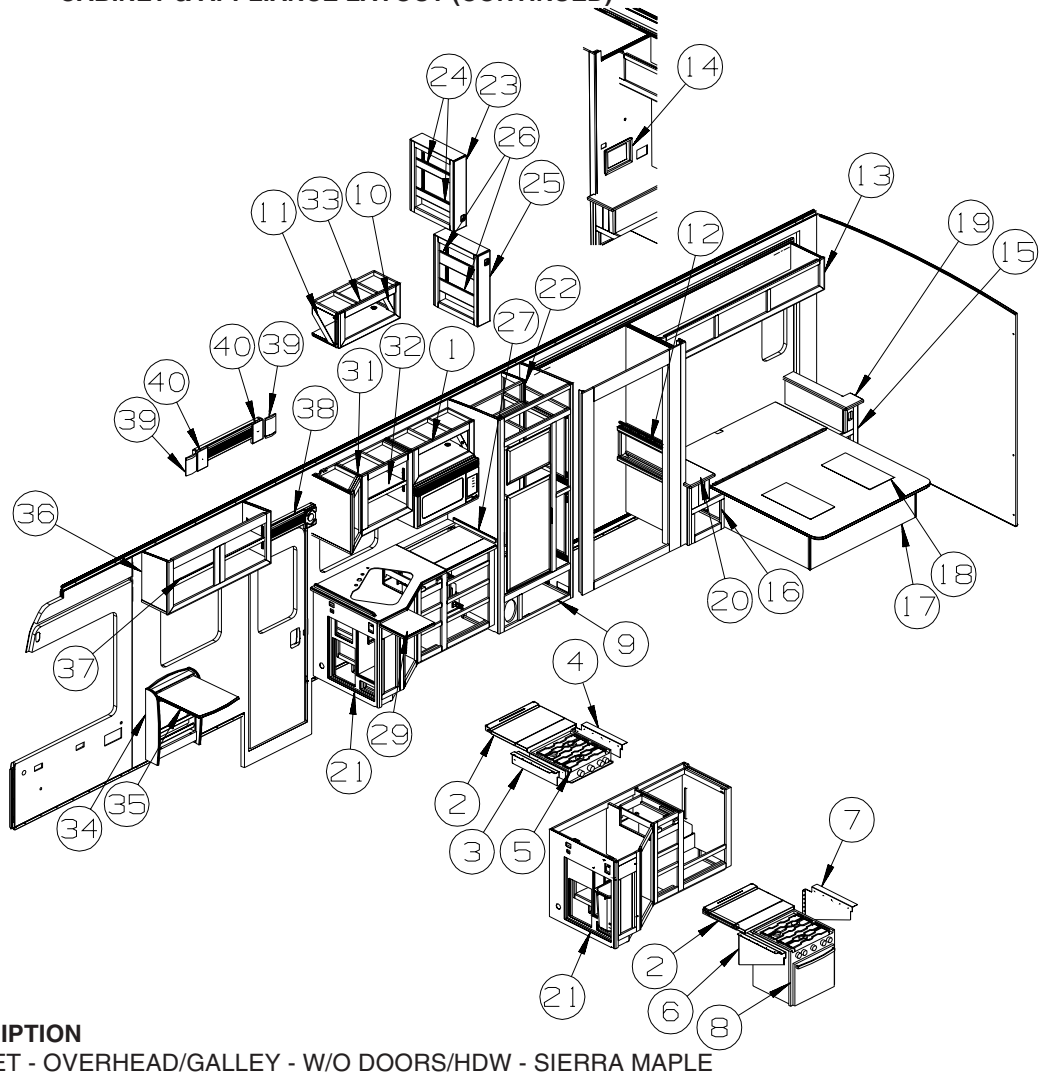

KEY	PART NUMBER	U/M	DESCRIPTION
31	151961-01-T92	EA	CABINET - OVERHEAD/GALLEY - W/O DOORS/HDW - SIERRA MAPLE
32	151961-16-T89	EA	SHELF - CABINET - OVERHEAD/GALLEY - PORTSMOUTH OAK
32	151961-16-T90	EA	SHELF - CABINET - OVERHEAD/GALLEY - CONCERT CHERRY
32	151961-16-T91	EA	SHELF - CABINET - OVERHEAD/GALLEY - WASHED MAPLE
32	151961-16-T92	EA	SHELF - CABINET - OVERHEAD/GALLEY - SIERRA MAPLE
33	151962-01-T77	EA	CABINET - OVERHEAD/MICROWAVE - W/O DOORS/HARDWARE - PORTSMOUTH OAK
33	151962-01-T78	EA	CABINET - OVERHEAD/MICROWAVE - W/O DOORS/HARDWARE - CONCERT CHERRY
33	151962-01-T79	EA	CABINET - OVERHEAD/MICROWAVE - W/O DOORS/HARDWARE - WASHED MAPLE
33	151962-01-T80	EA	CABINET - OVERHEAD/MICROWAVE - W/O DOORS/HARDWARE - SIERRA MAPLE
34	149044-02-SA0	EA	CABINET - W/PULLOUT TABLE - PORTSMOUTH OAK
34	149044-02-SA1	EA	CABINET - W/PULLOUT TABLE - CONCERT CHERRY
34	149044-02-SA2	EA	CABINET - W/PULLOUT TABLE - WASHED MAPLE
34	149044-02-SA3	EA	CABINET - W/PULLOUT TABLE - SIERRA MAPLE
35	149044-31-SA0	EA	TABLE - F/PULLOUT CABINET - PORTSMOUTH OAK
35	149044-31-SA1	EA	TABLE - F/PULLOUT CABINET - BROWN PLANK CHERRY - CONCERT CHERRY
35	149044-31-SA2	EA	TABLE - F/PULLOUT CABINET - HARDROCK MAPLE - WASHED MAPLE
35	149044-31-SA3	EA	TABLE - F/PULLOUT CABINET - HONEY MAPLE - SIERRA MAPLE
36	155394-01-T77	EA	CABINET - OVERHEAD/FRONT/RH HAND - W/O DOORS/HDW - PORTSMOUTH OAK
36	155394-01-T78	EA	CABINET - OVERHEAD/FRONT/RH HAND - W/O DOORS/HDW - CONCERT CHERRY
36	155394-01-T79	EA	CABINET - OVERHEAD/FRONT/RH HAND - W/O DOORS/HDW - WASHED MAPLE
36	155394-01-T80	EA	CABINET - OVERHEAD/FRONT/RH HAND - W/O DOORS/HDW - SIERRA MAPLE
37	155394-21-T77	EA	SHELF - W/PLASTIC MOLDING - PORTSMOUTH OAK
37	155394-21-T78	EA	SHELF - W/PLASTIC MOLDING - CONCERT CHERRY
37	155394-21-T79	EA	SHELF - W/PLASTIC MOLDING - WASHED MAPLE
37	155394-21-T80	EA	SHELF - W/PLASTIC MOLDING - SIERRA MAPLE
38	153623-02-T89	EA	CABINET - OVERHEAD/ENTRY DOOR - W/O DOORS/HDW - PORTSMOUTH OAK FROM: 00-00-00 THRU: 08-07-05
38	157260-02-T89	EA	CABINET - OVERHEAD/ENTRY DOOR - W/O DOORS/HDW - PORTSMOUTH OAK FROM: 08-08-05 THRU: 99-99-99

COPYRIGHT © 2006 WINNEBAGO INDUSTRIES INC.

CABINET & APPLIANCE GROUP (CONTINUED)

CABINET & APPLIANCE LAYOUT (CONTINUED)

KEY	PART NUMBER	U/M	DESCRIPTION
38	153623-02-T90	EA	CABINET - OVERHEAD/ENTRY DOOR - W/O DOORS/HDW - CONCERT CHERRY FROM: 00-00-00 THRU: 08-07-05
38	157260-02-T90	EA	CABINET - OVERHEAD/ENTRY DOOR - W/O DOORS/HDW - CONCERT CHERRY FROM: 08-08-05 THRU: 99-99-99
38	153623-02-T91	EA	CABINET - OVERHEAD/ENTRY DOOR - W/O DOORS/HDW - WASHED MAPLE FROM: 00-00-00 THRU: 08-07-05
38	157260-02-T91	EA	CABINET - OVERHEAD/ENTRY DOOR - W/O DOORS/HDW - WASHED MAPLE FROM: 08-08-05 THRU: 99-99-99
38	153623-02-T92	EA	CABINET - OVERHEAD/ENTRY DOOR - W/O DOORS/HDW - SIERRA MAPLE FROM: 00-00-00 THRU: 08-07-05
38	157260-02-T92	EA	CABINET - OVERHEAD/ENTRY DOOR - W/O DOORS/HDW - SIERRA MAPLE FROM: 08-08-05 THRU: 99-99-99
39	153044-03-T89	EA	MOLDING/TRIM - SLIDEOUT - 3.1" X 7.9" - PORTSMOUTH OAK FROM: 00-00-00 THRU: 08-07-05
39	153044-06-T89	EA	MOLDING/TRIM - SLIDEOUT - 3.1" X 7.9" - PORTSMOUTH OAK FROM: 08-08-05 THRU: 99-99-99
39	153044-03-T90	EA	MOLDING/TRIM - SLIDEOUT - 3.1" X 7.9" - CONCERT CHERRY FROM: 00-00-00 THRU: 08-07-05
39	153044-06-T90	EA	MOLDING/TRIM - SLIDEOUT - 3.1" X 7.9" - CONCERT CHERRY FROM: 08-08-05 THRU: 99-99-99
39	153044-03-T91	EA	MOLDING/TRIM - SLIDEOUT - 3.1" X 7.9" - WASHED MAPLE FROM: 00-00-00 THRU: 08-07-05
39	153044-06-T91	EA	MOLDING/TRIM - SLIDEOUT - 3.1" X 7.9" - WASHED MAPLE FROM: 08-08-05 THRU: 99-99-99
39	153044-03-T92	EA	MOLDING/TRIM - SLIDEOUT - 3.1" X 7.9" - SIERRA MAPLE FROM: 00-00-00 THRU: 08-07-05
39	153044-06-T92	EA	MOLDING/TRIM - SLIDEOUT - 3.1" X 7.9" - SIERRA MAPLE FROM: 08-08-05 THRU: 99-99-99
40	153434-03-T89	EA	BACK SPACER - MOLDING - TRIM - SLIDEOUT/CORNER - PORTSMOUTH OAK - NOT ILLUSTRATED FROM: 00-00-00 THRU: 08-07-05
40	153421-09-T77	EA	MOLDING/BLOCK - 5.1" X 7.8" - W/O INSERT - PORTSMOUTH OAK FROM: 08-08-05 THRU: 99-99-99
40	153434-03-T90	EA	BACK SPACER MOLDING - TRIM - SLIDEOUT/CORNER - CONCERT CHERRY - NOT ILLUSTRATED FROM: 00-00-00 THRU: 08-07-05
40	153421-09-T78	EA	MOLDING/BLOCK - 5.1" X 7.8" - W/O INSERT - CONCERT CHERRY FROM: 08-08-05 THRU: 99-99-99
40	153434-03-T91	EA	BACK SPACER MOLDING - TRIM - SLIDEOUT/CORNER - WASHED MAPLE - NOT ILLUSTRATED FROM: 00-00-00 THRU: 08-07-05
40	153421-09-T79	EA	MOLDING/BLOCK - 5.1" X 7.8" - W/O INSERT - WASHED MAPLE FROM: 08-08-05 THRU: 99-99-99
40	153434-03-T92	EA	BACK SPACER MOLDING - TRIM - SLIDEOUT/CORNER - SIERRA MAPLE - NOT ILLUSTRATED FROM: 00-00-00 THRU: 08-07-05
40	153421-09-T80	EA	MOLDING/BLOCK - 5.1" X 7.8" - W/O INSERT - SIERRA MAPLE FROM: 08-08-05 THRU: 99-99-99

***COMPONENT PARTS LISTED LATER IN THIS GROUP**

COPYRIGHT © 2006 WINNEBAGO INDUSTRIES INC.

CABINET & APPLIANCE GROUP (CONTINUED)

CABINET & APPLIANCE LAYOUT (CONTINUED)

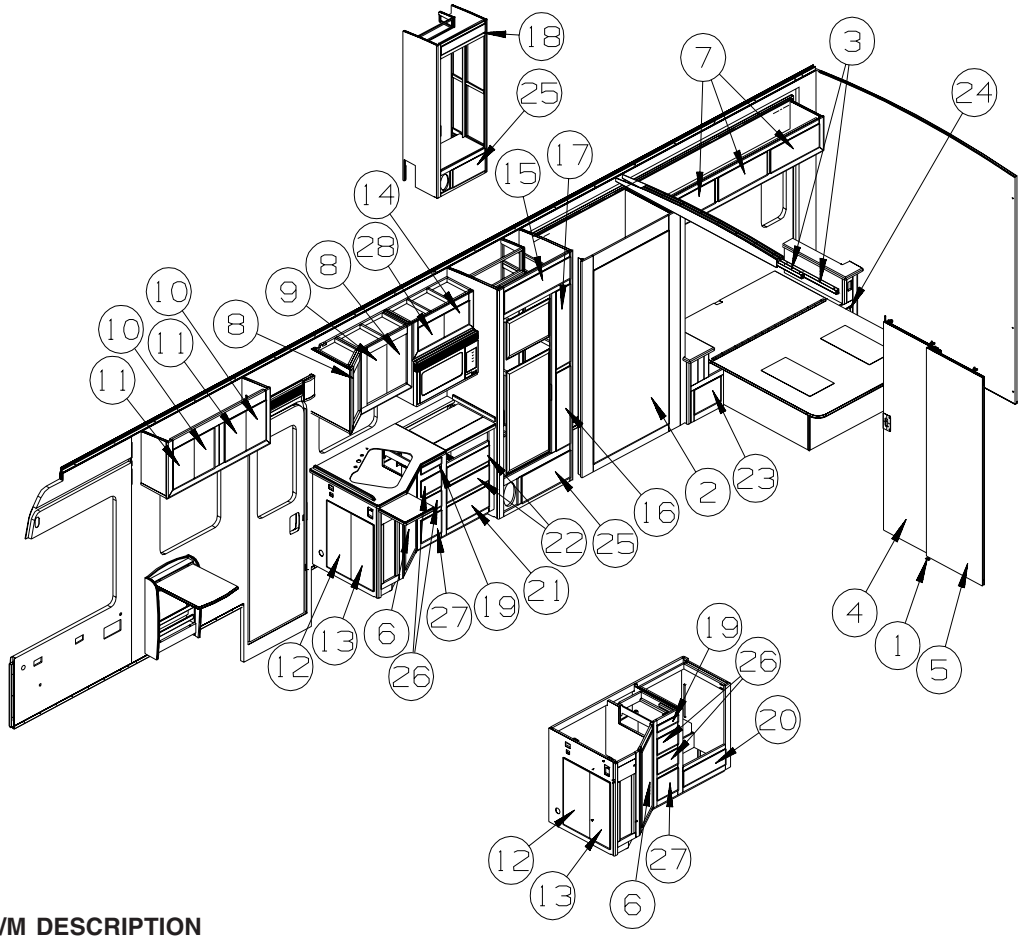

KEY	PART NUMBER	U/M	DESCRIPTION
1	064467-01-000	EA	GUIDE - POCKET - SLIDING DOOR - WALL MOUNTED
2			SEE BREAKDOWN OF MIRRORED WARDROBE DOOR ON FOLLOWING PAGES
3	145608-09-01A	EA	TRACK - DOOR - 73.6" - OFF WHITE
4	153293-20-T77	EA	PANEL - SLIDING DOOR - W/O HANGERS/LATCH/U-CHANNEL - PORTSMOUTH OAK
4	153293-20-T78	EA	PANEL - SLIDING DOOR - W/O HANGERS/LATCH/U-CHANNEL - CONCERT CHERRY
4	153293-20-T79	EA	PANEL - SLIDING DOOR - W/O HANGERS/LATCH/U-CHANNEL - WASHED MAPLE
4	153293-20-T80	EA	PANEL - SLIDING DOOR - W/O HANGERS/LATCH/U-CHANNEL - SIERRA MAPLE
5	153293-24-T77	EA	PANEL - SLIDING DOOR - W/O HANGERS/U-CHANNEL - PORTSMOUTH OAK
5	153293-24-T78	EA	PANEL - SLIDING DOOR - W/O HANGERS/U-CHANNEL - CONCERT CHERRY
5	153293-24-T79	EA	PANEL - SLIDING DOOR - W/O HANGERS/U-CHANNEL - WASHED MAPLE
5	153293-24-T80	EA	PANEL - SLIDING DOOR - W/O HANGERS/U-CHANNEL - SIERRA MAPLE
6	136955-C6-T89	EA	DOOR - RAISED PANEL/PENCIL EDGE - 15.6" X 29.5" - W/O HDW - PORTSMOUTH OAK
6	136955-C6-T90	EA	DOOR - RAISED PANEL/PENCIL EDGE - 15.6" X 29.5" - W/O HDW - CONCERT CHERRY
6	136955-C6-T91	EA	DOOR - RAISED PANEL/PENCIL EDGE - 15.6" X 29.5" - W/O HDW - WASHED MAPLE
6	136955-C6-T92	EA	DOOR - RAISED PANEL/PENCIL EDGE - 15.6" X 29.5" - W/O HDW - SIERRA MAPLE
7	141522-25-TB4	EA	DOOR - ARCHED/PENCIL EDGE/HORIZ - 10" X 25.2" - W/O HDW - PORTSMOUTH OAK
7	141522-25-TB5	EA	DOOR - ARCHED/PENCIL EDGE/HORIZ - 10" X 25.2" - W/O HDW - CONCERT CHERRY
7	141522-25-TB6	EA	DOOR - ARCHED/PENCIL EDGE/HORIZ - 10" X 25.2" - W/O HDW - WASHED MAPLE
7	141522-25-TB7	EA	DOOR - ARCHED/PENCIL EDGE/HORIZ - 10" X 25.2" - W/O HDW - SIERRA MAPLE
8	141518-35-T89	EA	DOOR - ARCHED/PENCIL EDGE/LEFT HAND-10.6" X 19.9"-W/O HDW - PORTSMOUTH OAK
8	141518-35-T90	EA	DOOR - ARCHED/PENCIL EDGE/LEFT HAND-10.6" X 19.9"-W/O HDW - CONCERT CHERRY
8	141518-35-T91	EA	DOOR - ARCHED/PENCIL EDGE/LEFT HAND-10.6" X 19.9"-W/O HDW - WASHED MAPLE
8	141518-35-T92	EA	DOOR - ARCHED/PENCIL EDGE/LEFT HAND-10.6" X 19.9"-W/O HDW - SIERRA MAPLE
9	141520-36-T89	EA	DOOR - ARCHED/PENCIL EDGE/RIGHT HAND -10.6"X19.9"- W/O HDW - PORTSMOUTH OAK
9	141520-36-T90	EA	DOOR - ARCHED/PENCIL EDGE/RIGHT HAND -10.6"X19.9"- W/O HDW - CONCERT CHERRY
9	141520-36-T91	EA	DOOR - ARCHED/PENCIL EDGE/RIGHT HAND -10.6"X19.9"- W/O HDW - WASHED MAPLE
9	141520-36-T92	EA	DOOR - ARCHED/PENCIL EDGE/RIGHT HAND -10.6"X19.9"- W/O HDW - SIERRA MAPLE
10	141520-39-T89	EA	DOOR - ARCHED/PENCIL EDGE/RIGHT HAND -10.8"X16.5"- W/O HDW - PORTSMOUTH OAK
10	141520-39-T90	EA	DOOR - ARCHED/PENCIL EDGE/RIGHT HAND -10.8"X16.5"- W/O HDW - CONCERT CHERRY
10	141520-39-T91	EA	DOOR - ARCHED/PENCIL EDGE/RIGHT HAND -10.8"X16.5"- W/O HDW - WASHED MAPLE
10	141520-39-T92	EA	DOOR - ARCHED/PENCIL EDGE/RIGHT HAND -10.8"X16.5"- W/O HDW - SIERRA MAPLE
11	141518-38-T89	EA	DOOR - ARCHED/PENCIL EDGE/LEFT HAND-10.8" X 16.5"-W/O HDW - PORTSMOUTH OAK
11	141518-38-T90	EA	DOOR - ARCHED/PENCIL EDGE/LEFT HAND-10.8" X 16.5"-W/O HDW - CONCERT CHERRY

COPYRIGHT © 2006 WINNEBAGO INDUSTRIES INC.

CABINET & APPLIANCE GROUP (CONTINUED)

CABINET & APPLIANCE LAYOUT (CONTINUED)

KEY	PART NUMBER	U/M	DESCRIPTION
11	141518-38-T91	EA	DOOR - ARCHED/PENCIL EDGE/LEFT HAND-10.8" X 16.5"-W/O HDW - WASHED MAPLE
11	141518-38-T92	EA	DOOR - ARCHED/PENCIL EDGE/LEFT HAND-10.8" X 16.5"-W/O HDW - SIERRA MAPLE
12	136955-71-T89	EA	DOOR - RAISED PANEL/PENCIL EDGE - 12" X 26" - W/O HDW - PORTSMOUTH OAK
12	136955-71-T90	EA	DOOR - RAISED PANEL/PENCIL EDGE - 12" X 26" - W/O HDW - CONCERT CHERRY
12	136955-71-T91	EA	DOOR - RAISED PANEL/PENCIL EDGE - 12" X 26" - W/O HDW - WASHED MAPLE
12	136955-71-T92	EA	DOOR - RAISED PANEL/PENCIL EDGE - 12" X 26" - W/O HDW - SIERRA MAPLE
13	136955-72-T89	EA	DOOR - RAISED PANEL/PENCIL EDGE - 12" X 26" - W/O HDW - PORTSMOUTH OAK
13	136955-72-T90	EA	DOOR - RAISED PANEL/PENCIL EDGE - 12" X 26" - W/O HDW - CONCERT CHERRY
13	136955-72-T91	EA	DOOR - RAISED PANEL/PENCIL EDGE - 12" X 26" - W/O HDW - WASHED MAPLE
13	136955-72-T92	EA	DOOR - RAISED PANEL/PENCIL EDGE - 12" X 26" - W/O HDW - SIERRA MAPLE
14	145797-06-T89	EA	DOOR - ARCHED PANEL/PENCIL EDGE - 13" X 9.8" - W/O HDW - PORTSMOUTH OAK
14	145797-06-T90	EA	DOOR - ARCHED PANEL/PENCIL EDGE - 13" X 9.8" - W/O HDW - CONCERT CHERRY
14	145797-06-T91	EA	DOOR - ARCHED PANEL/PENCIL EDGE - 13" X 9.8" - W/O HDW - WASHED MAPLE
14	145797-06-T92	EA	DOOR - ARCHED PANEL/PENCIL EDGE - 13" X 9.8" - W/O HDW - SIERRA MAPLE
15	145298-51-T89	EA	DOOR - SOLID PANEL/PENCIL EDGE - 9.8" X 33.4" - W/O HDW - PORTSMOUTH OAK
15	145298-51-T90	EA	DOOR - SOLID PANEL/PENCIL EDGE - 9.8" X 33.4" - W/O HDW - CONCERT CHERRY
15	145298-51-T91	EA	DOOR - SOLID PANEL/PENCIL EDGE - 9.8" X 33.4" - W/O HDW - WASHED MAPLE
15	145298-51-T92	EA	DOOR - SOLID PANEL/PENCIL EDGE - 9.8" X 33.4" - W/O HDW - SIERRA MAPLE
16	154289-01-TB4	EA	DOOR - RAISED PANEL/PENCIL EDGE - 7.9" X 30.3" - W/O HDW - PORTSMOUTH OAK
16	154289-01-TB5	EA	DOOR - RAISED PANEL/PENCIL EDGE - 7.9" X 30.3" - W/O HDW - CONCERT CHERRY
16	154289-01-TB6	EA	DOOR - RAISED PANEL/PENCIL EDGE - 7.9" X 30.3" - W/O HDW - WASHED MAPLE
16	154289-01-TB7	EA	DOOR - RAISED PANEL/PENCIL EDGE - 7.9" X 30.3" - W/O HDW - SIERRA MAPLE
17	154289-03-TB4	EA	DOOR - ARCHED PANEL/PENCIL EDGE - 7.9" X 30.3" - W/O HDW - PORTSMOUTH OAK
17	154289-03-TB5	EA	DOOR - ARCHED PANEL/PENCIL EDGE - 7.9" X 30.3" - W/O HDW - CONCERT CHERRY
17	154289-03-TB6	EA	DOOR - ARCHED PANEL/PENCIL EDGE - 7.9" X 30.3" - W/O HDW - WASHED MAPLE
17	154289-03-TB7	EA	DOOR - ARCHED PANEL/PENCIL EDGE - 7.9" X 30.3" - W/O HDW - SIERRA MAPLE
18	145298-44-T89	EA	DOOR - SOLID PANEL/PENCIL EDGE - 5.7" X 33.6" - W/O HDW - PORTSMOUTH OAK
18	145298-44-T90	EA	DOOR - SOLID PANEL/PENCIL EDGE - 5.7" X 33.6" - W/O HDW - CONCERT CHERRY
18	145298-44-T91	EA	DOOR - SOLID PANEL/PENCIL EDGE - 5.7" X 33.6" - W/O HDW - WASHED MAPLE
18	145298-44-T92	EA	DOOR - SOLID PANEL/PENCIL EDGE - 5.7" X 33.6" - W/O HDW - SIERRA MAPLE
19	144803-A8-TB4	EA	FACE/DRAWER - SOLID PANEL/PENCIL EDGE-4.3" X 11.4"-W/O HDW - PORTSMOUTH OAK
19	144803-A8-TB5	EA	FACE/DRAWER - SOLID PANEL/PENCIL EDGE-4.3" X 11.4"-W/O HDW - CONCERT CHERRY
19	144803-A8-TB6	EA	FACE/DRAWER - SOLID PANEL/PENCIL EDGE-4.3" X 11.4"-W/O HDW - WASHED MAPLE
19	144803-A8-TB7	EA	FACE/DRAWER - SOLID PANEL/PENCIL EDGE-4.3" X 11.4"-W/O HDW - SIERRA MAPLE
20	153121-08-SB4	EA	DRAWER - PENCIL EDGE - 19.8"W X 15.7"D - W/O SLIDES/HDW - PORTSMOUTH OAK
20	153121-08-SB5	EA	DRAWER - PENCIL EDGE - 19.8"W X 15.7"D - W/O SLIDES/HDW - CONCERT CHERRY
20	153121-08-SB6	EA	DRAWER - PENCIL EDGE - 19.8"W X 15.7"D - W/O SLIDES/HDW - WASHED MAPLE
20	153121-08-SB7	EA	DRAWER - PENCIL EDGE - 19.8"W X 15.7"D - W/O SLIDES/HDW - SIERRA MAPLE
21	153121-10-SB4	EA	DRAWER - PENCIL EDGE - 19.8"W X 15.7"D - W/O SLIDES/HDW - PORTSMOUTH OAK
21	153121-10-SB5	EA	DRAWER - PENCIL EDGE - 19.8"W X 15.7"D - W/O SLIDES/HDW - CONCERT CHERRY
21	153121-10-SB6	EA	DRAWER - PENCIL EDGE - 19.8"W X 15.7"D - W/O SLIDES/HDW - WASHED MAPLE
21	153121-10-SB7	EA	DRAWER - PENCIL EDGE - 19.8"W X 15.7"D - W/O SLIDES/HDW - SIERRA MAPLE
22	153121-56-TB4	EA	DRAWER - PENCIL EDGE - 19.8"W X 19.7"D - W/O SLIDES/HDW - PORTSMOUTH OAK
22	153121-56-TB5	EA	DRAWER - PENCIL EDGE - 19.8"W X 19.7"D - W/O SLIDES/HDW - CONCERT CHERRY
22	153121-56-TB6	EA	DRAWER - PENCIL EDGE - 19.8"W X 19.7"D - W/O SLIDES/HDW - WASHED MAPLE
22	153121-56-TB7	EA	DRAWER - PENCIL EDGE - 19.8"W X 19.7"D - W/O SLIDES/HDW - SIERRA MAPLE
23	153121-K4-T56	EA	DRAWER - PENCIL EDGE - 12"W X 23.6"D - W/O SLIDES/HDW - PORTSMOUTH OAK
23	153121-K4-T90	EA	DRAWER - PENCIL EDGE - 12"W X 23.6"D - W/O SLIDES/HDW - CONCERT CHERRY
23	153121-K4-T91	EA	DRAWER - PENCIL EDGE - 12"W X 23.6"D - W/O SLIDES/HDW - WASHED MAPLE
23	153121-K4-TL3	EA	DRAWER - PENCIL EDGE - 12"W X 23.6"D - W/O SLIDES/HDW - SIERRA MAPLE
24	153121-48-T89	EA	DRAWER - PENCIL EDGE - 7.6"W X 23.6"D - W/O SLIDES/HDW - PORTSMOUTH OAK
24	153121-48-T90	EA	DRAWER - PENCIL EDGE - 7.6"W X 23.6"D - W/O SLIDES/HDW - CONCERT CHERRY
24	153121-48-T91	EA	DRAWER - PENCIL EDGE - 7.6"W X 23.6"D - W/O SLIDES/HDW - WASHED MAPLE
24	153121-48-T92	EA	DRAWER - PENCIL EDGE - 7.6"W X 23.6"D - W/O SLIDES/HDW - SIERRA MAPLE
25	153121-50-T89	EA	DRAWER - PENCIL EDGE - 23"W X 13.8"D - W/O SLIDES/HDW - PORTSMOUTH OAK
25	153121-50-T90	EA	DRAWER - PENCIL EDGE - 23"W X 13.8"D - W/O SLIDES/HDW - CONCERT CHERRY
25	153121-50-T91	EA	DRAWER - PENCIL EDGE - 23"W X 13.8"D - W/O SLIDES/HDW - WASHED MAPLE
25	153121-50-T92	EA	DRAWER - PENCIL EDGE - 23"W X 13.8"D - W/O SLIDES/HDW - SIERRA MAPLE
26	153121-52-TB4	EA	DRAWER - PENCIL EDGE - 9.2"W X 19.7"D - W/O SLIDES/HDW - PORTSMOUTH OAK
26	153121-52-TB5	EA	DRAWER - PENCIL EDGE - 9.2"W X 19.7"D - W/O SLIDES/HDW - CONCERT CHERRY
26	153121-52-TB6	EA	DRAWER - PENCIL EDGE - 9.2"W X 19.7"D - W/O SLIDES/HDW - WASHED MAPLE
26	153121-52-TB7	EA	DRAWER - PENCIL EDGE - 9.2"W X 19.7"D - W/O SLIDES/HDW - SIERRA MAPLE

COPYRIGHT © 2006 WINNEBAGO INDUSTRIES INC.

CABINET & APPLIANCE GROUP (CONTINUED)

CABINET & APPLIANCE LAYOUT (CONTINUED)

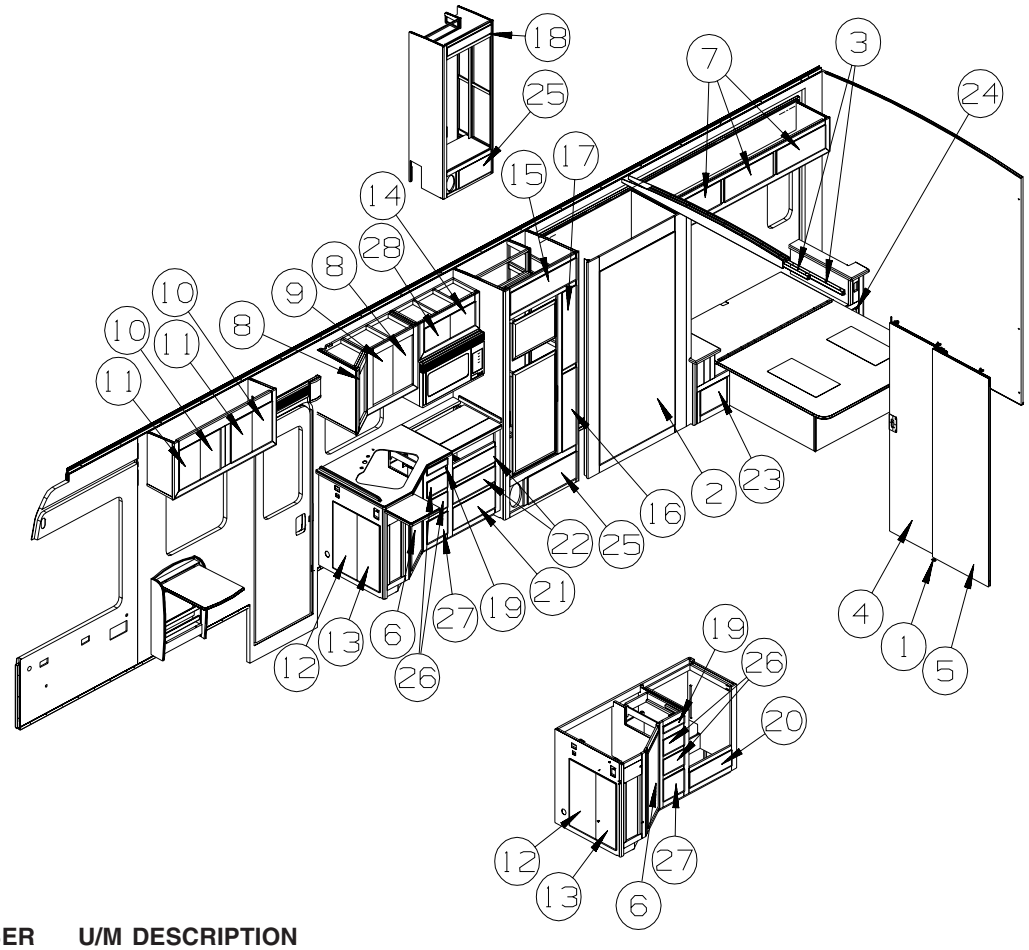

KEY	PART NUMBER	U/M	DESCRIPTION
27	153121-54-TB4	EA	DRAWER - PENCIL EDGE - 9.2"W X 15.7"D - W/O SLIDES/HDW - PORTSMOUTH OAK
27	153121-54-TB5	EA	DRAWER - PENCIL EDGE - 9.2"W X 15.7"D - W/O SLIDES/HDW - CONCERT CHERRY
27	153121-54-TB6	EA	DRAWER - PENCIL EDGE - 9.2"W X 15.7"D - W/O SLIDES/HDW - WASHED MAPLE
27	153121-54-TB7	EA	DRAWER - PENCIL EDGE - 9.2"W X 15.7"D - W/O SLIDES/HDW - SIERRA MAPLE
28	145797-07-T89	EA	DOOR - ARCHED PANEL/PENCIL EDGE - 13" X 9.8" - W/O HDW - PORTSMOUTH OAK
28	145797-07-T90	EA	DOOR - ARCHED PANEL/PENCIL EDGE - 13" X 9.8" - W/O HDW - CONCERT CHERRY
28	145797-07-T91	EA	DOOR - ARCHED PANEL/PENCIL EDGE - 13" X 9.8" - W/O HDW - WASHED MAPLE
28	145797-07-T92	EA	DOOR - ARCHED PANEL/PENCIL EDGE - 13" X 9.8" - W/O HDW - SIERRA MAPLE

COPYRIGHT © 2006 WINNEBAGO INDUSTRIES INC.

CABINET & APPLIANCE GROUP (CONTINUED)

CABINET & APPLIANCE LAYOUT (CONTINUED)

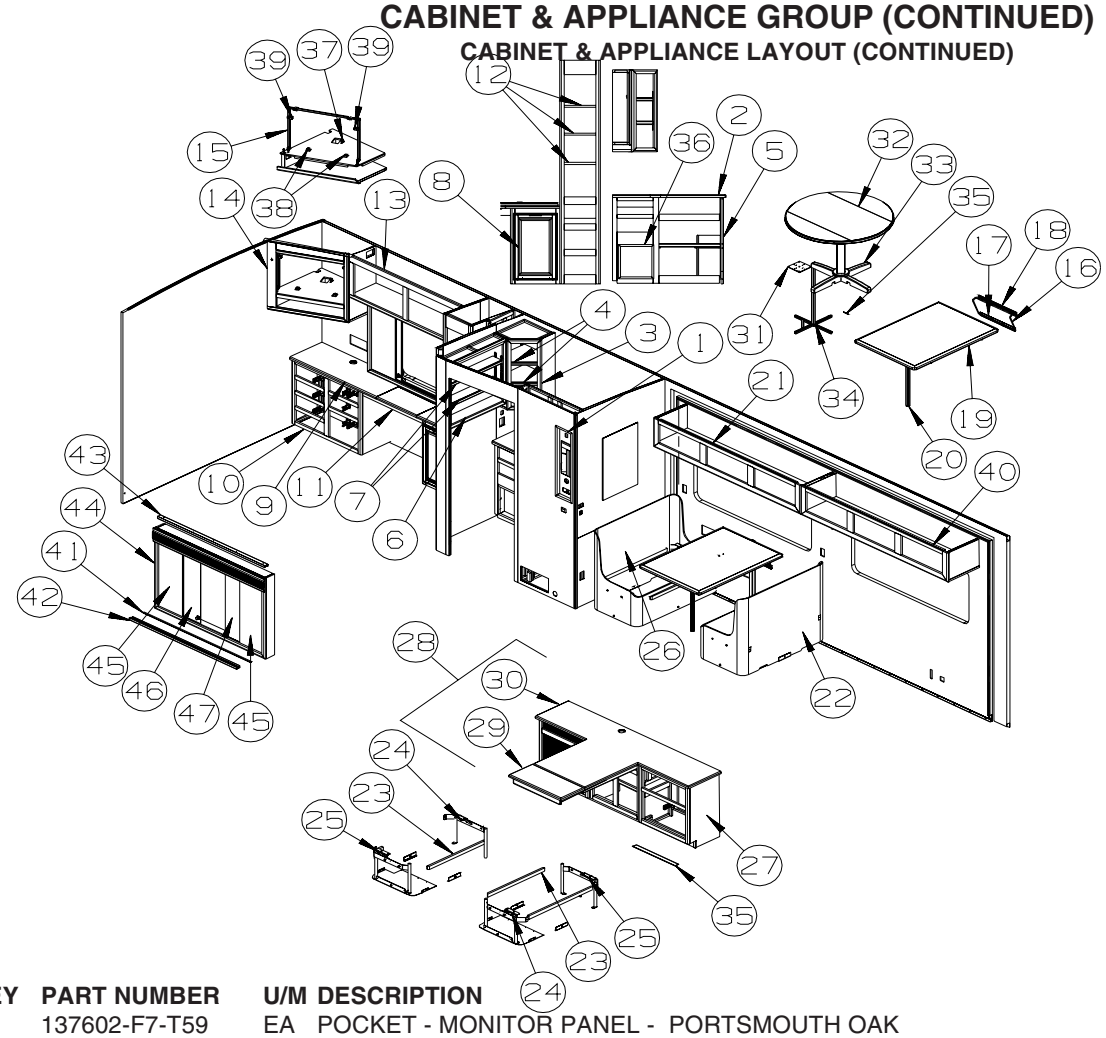

KEY	PART NUMBER	U/M	DESCRIPTION
1	137602-F7-T59	EA	POCKET - MONITOR PANEL - PORTSMOUTH OAK
1	137602-F7-T60	EA	POCKET - MONITOR PANEL - CONCERT CHERRY
1	137602-F7-T61	EA	POCKET - MONITOR PANEL - WASHED MAPLE
1	137602-F7-TP0	EA	POCKET - MONITOR PANEL - SIERRA MAPLE
1	137602-F5-T59	EA	POCKET - MONITOR PANEL - PORTSMOUTH OAK - DC/AC INVERTER
1	137602-F5-T60	EA	POCKET - MONITOR PANEL - CONCERT CHERRY - DC/AC INVERTER
1	137602-F5-T61	EA	POCKET - MONITOR PANEL - WASHED MAPLE - DC/AC INVERTER
1	137602-F5-TP0	EA	POCKET - MONITOR PANEL - SIERRA MAPLE - DC/AC INVERTER
2	149105-10-05A	EA	COUNTERTOP - 1/4" VENDURA - OATMEAL
3	155391-01-T77	EA	CABINET - OVERHEAD/BATH/CORNER - W/O DOORS/HARDWARE - PORTSMOUTH OAK5
3	155391-01-T78	EA	CABINET - OVERHEAD/BATH/CORNER - W/O DOORS/HARDWARE - CONCERT CHERRY
3	155391-01-T79	EA	CABINET - OVERHEAD/BATH/CORNER - W/O DOORS/HARDWARE - WASHED MAPLE
3	155391-01-T80	EA	CABINET - OVERHEAD/BATH/CORNER - W/O DOORS/HARDWARE - SIERRA MAPLE
4	155391-24-T77	EA	SHELF - W/WOOD MOLDING - PORTSMOUTH OAK
4	155391-24-T78	EA	SHELF - W/WOOD MOLDING - CONCERT CHERRY
4	155391-24-T79	EA	SHELF - W/WOOD MOLDING - WASHED MAPLE
4	155391-24-T80	EA	SHELF - W/WOOD MOLDING - SIERRA MAPLE
5	P45683-01-R38	EA	CABINET - LAVATORY - W/O COUNTERTOP/DOORS/DRAWERS/HARDWARE - PORTSMOUTH OAK
5	P45683-01-R39	EA	CABINET - LAVATORY - W/O COUNTERTOP/DOORS/DRAWERS/HARDWARE - CONCERT CHERRY
5	P45683-01-RW4	EA	CABINET - LAVATORY - W/O COUNTERTOP/DOORS/DRAWERS/HARDWARE - WASHED MAPLE
5	P45683-01-S67	EA	CABINET - LAVATORY - W/O COUNTERTOP/DOORS/DRAWERS/HARDWARE - SIERRA MAPLE
6	155390-01-T77	EA	CABINET - OVERHEAD/LINEN - W/O DOORS/HDW - PORTSMOUTH OAK
6	155390-01-T78	EA	CABINET - OVERHEAD/LINEN - W/O DOORS/HDW - CONCERT CHERRY
6	155390-01-T79	EA	CABINET - OVERHEAD/LINEN - W/O DOORS/HDW - WASHED MAPLE
6	155390-01-T80	EA	CABINET - OVERHEAD/LINEN - W/O DOORS/HDW - SIERRA MAPLE
7	155390-20-T77	EA	SHELF - W/WOOD MOLDING - PORTSMOUTH OAK
7	155390-20-T78	EA	SHELF - W/WOOD MOLDING - CONCERT CHERRY
7	155390-20-T79	EA	SHELF - W/WOOD MOLDING - WASHED MAPLE
7	155390-20-T80	EA	SHELF - W/WOOD MOLDING - SIERRA MAPLE
8	137356-51-T89	EA	CABINET - HAMPER - W/DOOR - W/O HDW - PORTSMOUTH OAK
8	137356-51-T90	EA	CABINET - HAMPER - W/DOOR - W/O HDW - CONCERT CHERRY
8	137356-51-T91	EA	CABINET - HAMPER - W/DOOR - W/O HDW - WASHED MAPLE
8	137356-51-T92	EA	CABINET - HAMPER - W/DOOR - W/O HDW - SIERRA MAPLE

COPYRIGHT © 2006 WINNEBAGO INDUSTRIES INC.

CABINET & APPLIANCE GROUP (CONTINUED)

CABINET & APPLIANCE LAYOUT (CONTINUED)

KEY	PART NUMBER	U/M	DESCRIPTION
	145268-23-T89	EA	DOOR - RAISED PANEL/PENCIL EDGE - 25.6" X 15.3" - W/O HDW - PORTSMOUTH OAK
	145268-23-T90	EA	DOOR - RAISED PANEL/PENCIL EDGE - 25.6" X 15.3" - W/O HDW - CONCERT CHERRY
	145268-23-T91	EA	DOOR - RAISED PANEL/PENCIL EDGE - 25.6" X 15.3" - W/O HDW - WASHED MAPLE
	145268-23-T92	EA	DOOR - RAISED PANEL/PENCIL EDGE - 25.6" X 15.3" - W/O HDW - SIERRA MAPLE
9	140889-40-T89	EA	COUNTERTOP - LAMINATED - PORTSMOUTH OAK
9	140889-40-T90	EA	COUNTERTOP - LAMINATED - CONCERT CHERRY
9	140889-40-T91	EA	COUNTERTOP - LAMINATED - WASHED MAPLE
9	140889-40-T92	EA	COUNTERTOP - LAMINATED - SIERRA MAPLE
	140889-36-T89	EA	COUNTERTOP - LAMINATED - PORTSMOUTH OAK
	140889-36-T90	EA	COUNTERTOP - LAMINATED - CONCERT CHERRY
	140889-36-T91	EA	COUNTERTOP - LAMINATED - WASHED MAPLE
	140889-36-T92	EA	COUNTERTOP - LAMINATED - SIERRA MAPLE
10	P42155-02-P54	EA	CABINET - VANITY - W/O COUNTERTOP/DRAWER/HDW - PORTSMOUTH OAK
10	P42155-02-P55	EA	CABINET - VANITY - W/O COUNTERTOP/DRAWER/HDW - CONCERT CHERRY
10	P42155-02-RW4	EA	CABINET - VANITY - W/O COUNTERTOP/DRAWER/HDW - WASHED MAPLE
10	P42155-02-S79	EA	CABINET - VANITY - W/O COUNTERTOP/DRAWER/HDW - SIERRA MAPLE
11	142155-19-P45	EA	DRAWER/VANITY - W/O SLIDES/HDW - PORTSMOUTH OAK
11	142155-19-P46	EA	DRAWER/VANITY - W/O SLIDES/HDW - CONCERT CHERRY
11	142155-19-RW4	EA	DRAWER/VANITY - W/O SLIDES/HDW - WASHED MAPLE
11	142155-19-S67	EA	DRAWER/VANITY - W/O SLIDES/HDW - SIERRA MAPLE
12	155386-22-T77	EA	SHELF - W/PLASTIC EDGE TRIM - PORTSMOUTH OAK
12	155386-22-T78	EA	SHELF - W/PLASTIC EDGE TRIM - CONCERT CHERRY
12	155386-22-T79	EA	SHELF - W/PLASTIC EDGE TRIM - WASHED MAPLE
12	155386-22-T80	EA	SHELF - W/PLASTIC EDGE TRIM - SIERRA MAPLE
13	155392-01-T77	EA	CABINET - OVERHEAD/REAR/RIGHT HAND - W/O DOORS/HDW - PORTSMOUTH OAK
13	155392-01-T78	EA	CABINET - OVERHEAD/REAR/RIGHT HAND - W/O DOORS/HDW - CONCERT CHERRY
13	155392-01-T79	EA	CABINET - OVERHEAD/REAR/RIGHT HAND - W/O DOORS/HDW - WASHED MAPLE
13	155392-01-T80	EA	CABINET - OVERHEAD/REAR/RIGHT HAND - W/O DOORS/HDW - SIERRA MAPLE
14	155393-01-T77	EA	CABINET - OVERHEAD/TV/REAR - W/O DOORS/HDW - PORTSMOUTH OAK
14	155393-01-T78	EA	CABINET - OVERHEAD/TV/REAR - W/O DOORS/HDW - CONCERT CHERRY
14	155393-01-T79	EA	CABINET - OVERHEAD/TV/REAR - W/O DOORS/HDW - WASHED MAPLE
14	155393-01-T80	EA	CABINET - OVERHEAD/TV/REAR - W/O DOORS/HDW - SIERRA MAPLE
15	151954-04-02B	EA	BRACKET/HOLD DOWN - TV - E-COATED
16	024275-13-000	EA	ROD - TABLE LIFT - OFF/WHITE
17	024281-15-000	EA	BRACKET/WALL - TABLE LIFT - 17.12"
18	140921-02-01A	EA	BRACKET/TABLE SUPPORT - 18.5" - OFF WHITE
19	143257-08-R38	EA	TABLE - 29.7" X 41.5" - ROCKY MOUNTAIN HIGH/PORTSMOUTH OAK - PORTSMOUTH OAK
19	143257-08-R39	EA	TABLE - 29.7" X 41.5" - ROCKY MOUNTAIN HIGH/CHERRY - CONCERT CHERRY
19	143257-08-R46	EA	TABLE - 29.7" X 41.5" - ROCKY MOUNTAIN HIGH/WASHED MAPLE - WASHED MAPLE
19	143257-08-SB3	EA	TABLE - 29.7" X 41.5" - ROCKY MOUNTAIN HIGH/SIERRA MAPLE - SIERRA MAPLE
20	143798-01-01A	EA	CATCH - FLOOR TO TABLE LEG - BRIGHT WHITE
21	155389-01-T77	EA	CABINET - OVERHEAD/DINETTE - W/O DOORS/HDW - PORTSMOUTH OAK FROM: 00-00-00 THRU: 08-28-05
21	157098-01-T77	EA	CABINET - OVERHEAD/DINETTE - W/O DOORS/HDW - PORTSMOUTH OAK FROM: 08-29-05 THRU: 99-99-99
21	155389-01-T78	EA	CABINET - OVERHEAD/DINETTE - W/O DOORS/HDW - CONCERT CHERRY FROM: 00-00-00 THRU: 08-28-05
21	157098-01-T78	EA	CABINET - OVERHEAD/DINETTE - W/O DOORS/HDW - CONCERT CHERRY FROM: 08-29-05 THRU: 99-99-99
21	155389-01-T79	EA	CABINET - OVERHEAD/DINETTE - W/O DOORS/HDW - WASHED MAPLE FROM: 00-00-00 THRU: 08-28-05
21	157098-01-T79	EA	CABINET - OVERHEAD/DINETTE - W/O DOORS/HDW - WASHED MAPLE FROM: 08-29-05 THRU: 99-99-99
21	155389-01-T80	EA	CABINET - OVERHEAD/DINETTE - W/O DOORS/HDW - SIERRA MAPLE FROM: 00-00-00 THRU: 08-28-05
21	157098-01-T80	EA	CABINET - OVERHEAD/DINETTE - W/O DOORS/HDW - SIERRA MAPLE FROM: 08-29-05 THRU: 99-99-99
22	141859-52-T89	EA	CABINET/DINETTE W/BACK(WRAPPED)-RIGHT HAND - W/O DOORS/HDW FROM: 00-00-00 THRU: 08-21-05
22	141859-09-T89	EA	CABINET/DINETTE W/BACK(WRAPPED)-RIGHT HAND - W/O DOORS/HDW FROM: 08-22-05 THRU: 99-99-99
22	141859-52-T90	EA	CABINET/DINETTE W/BACK(WRAPPED)-RIGHT HAND - W/O DOORS/HDW FROM: 00-00-00 THRU: 08-21-05

COPYRIGHT © 2006 WINNEBAGO INDUSTRIES INC.

CABINET & APPLIANCE GROUP (CONTINUED)

CABINET & APPLIANCE LAYOUT (CONTINUED)

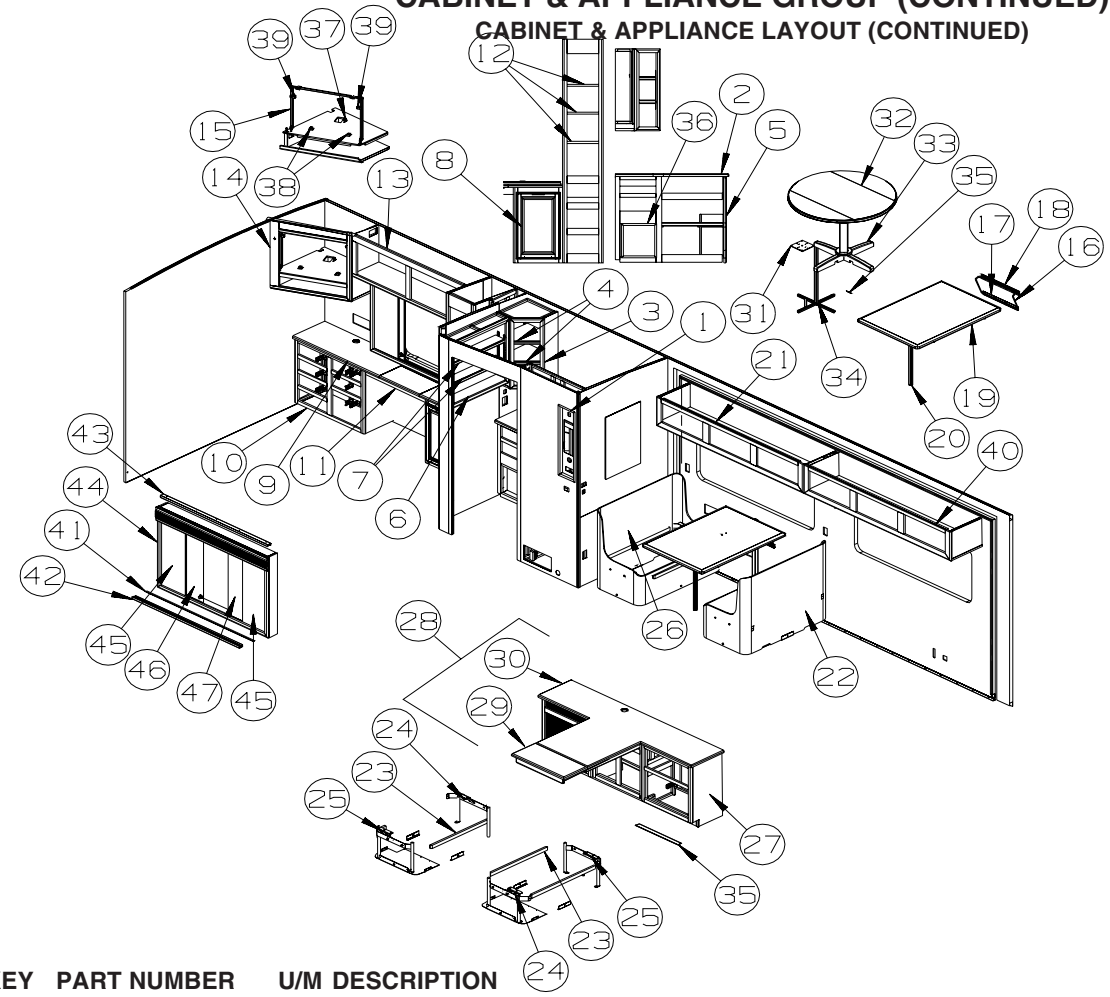

KEY	PART NUMBER	U/M	DESCRIPTION
22	141859-09-T90	EA	CABINET/DINETTE W/BACK(WRAPPED)-RIGHT HAND - W/O DOORS/HDW FROM: 08-22-05 THRU: 99-99-99
22	141859-52-T91	EA	CABINET/DINETTE W/BACK(WRAPPED)-RIGHT HAND - W/O DOORS/HDW FROM: 00-00-00 THRU: 08-21-05
22	141859-09-T91	EA	CABINET/DINETTE W/BACK(WRAPPED)-RIGHT HAND - W/O DOORS/HDW FROM: 08-22-05 THRU: 99-99-99
22	141859-52-T92	EA	CABINET/DINETTE W/BACK(WRAPPED)-RIGHT HAND - W/O DOORS/HDW FROM: 00-00-00 THRU: 08-21-05
22	141859-09-T92	EA	CABINET/DINETTE W/BACK(WRAPPED)-RIGHT HAND - W/O DOORS/HDW FROM: 08-22-05 THRU: 99-99-99
22	141859-52-T93	EA	CABINET/DINETTE W/BACK(WRAPPED)-RIGHT HAND - W/O DOORS/HDW FROM: 00-00-00 THRU: 08-21-05
22	141859-09-T93	EA	CABINET/DINETTE W/BACK(WRAPPED)-RIGHT HAND - W/O DOORS/HDW FROM: 08-22-05 THRU: 99-99-99
22	141859-52-T94	EA	CABINET/DINETTE W/BACK(WRAPPED)-RIGHT HAND - W/O DOORS/HDW FROM: 00-00-00 THRU: 08-21-05
22	141859-09-T94	EA	CABINET/DINETTE W/BACK(WRAPPED)-RIGHT HAND - W/O DOORS/HDW FROM: 08-22-05 THRU: 99-99-99
22	141859-52-T95	EA	CABINET/DINETTE W/BACK(WRAPPED)-RIGHT HAND - W/O DOORS/HDW FROM: 00-00-00 THRU: 08-21-05
22	141859-09-T95	EA	CABINET/DINETTE W/BACK(WRAPPED)-RIGHT HAND - W/O DOORS/HDW FROM: 08-22-05 THRU: 99-99-99
22	141859-52-T96	EA	CABINET/DINETTE W/BACK(WRAPPED)-RIGHT HAND - W/O DOORS/HDW FROM: 00-00-00 THRU: 08-21-05
22	141859-09-T96	EA	CABINET/DINETTE W/BACK(WRAPPED)-RIGHT HAND - W/O DOORS/HDW FROM: 08-22-05 THRU: 99-99-99
22	141859-52-T97	EA	CABINET/DINETTE W/BACK(WRAPPED)-RIGHT HAND - W/O DOORS/HDW FROM: 00-00-00 THRU: 08-21-05
22	141859-09-T97	EA	CABINET/DINETTE W/BACK(WRAPPED)-RIGHT HAND - W/O DOORS/HDW FROM: 08-22-05 THRU: 99-99-99
22	141859-52-T98	EA	CABINET/DINETTE W/BACK(WRAPPED)-RIGHT HAND - W/O DOORS/HDW FROM: 00-00-00 THRU: 08-21-05

COPYRIGHT © 2006 WINNEBAGO INDUSTRIES INC.

CABINET & APPLIANCE GROUP (CONTINUED)

CABINET & APPLIANCE LAYOUT (CONTINUED)

KEY	PART NUMBER	U/M	DESCRIPTION
22	141859-09-T98	EA	CABINET/DINETTE W/BACK(WRAPPED)-RIGHT HAND - W/O DOORS/HDW FROM: 08-22-05 THRU: 99-99-99
22	141859-52-T99	EA	CABINET/DINETTE W/BACK(WRAPPED)-RIGHT HAND - W/O DOORS/HDW FROM: 00-00-00 THRU: 08-21-05
22	141859-09-T99	EA	CABINET/DINETTE W/BACK(WRAPPED)-RIGHT HAND - W/O DOORS/HDW FROM: 08-22-05 THRU: 99-99-99
22	141859-52-T00	EA	CABINET/DINETTE W/BACK(WRAPPED)-RIGHT HAND - W/O DOORS/HDW FROM: 00-00-00 THRU: 08-21-05
22	141859-09-T00	EA	CABINET/DINETTE W/BACK(WRAPPED)-RIGHT HAND - W/O DOORS/HDW FROM: 08-22-05 THRU: 99-99-99
23	081295-01-N70	EA	SUPPORT - BED/DINETTE - 28" LONG - PORTSMOUTH OAK
23	081295-01-M52	EA	SUPPORT - BED/DINETTE - 28" LONG - CONCERT CHERRY
23	081295-01-T03	EA	SUPPORT - BED/DINETTE - 28" LONG - WASHED MAPLE
23	081295-01-RE0	EA	SUPPORT - BED/DINETTE - 28" LONG - SIERRA MAPLE
24	142033-01-000	EA	BRACKET - DINETTE - RIGHT HAND
25	142033-02-000	EA	BRACKET - DINETTE - LEFT HAND
26	141859-53-T89	EA	CABINET/DINETTE W/BACK(WRAPPED)-LEFT HAND - W/O DOORS/HDW FROM: 00-00-00 THRU: 08-21-05
26	141859-10-T89	EA	CABINET/DINETTE W/BACK(WRAPPED)-LEFT HAND - W/O DOORS/HDW FROM: 08-22-05 THRU: 99-99-99
26	141859-53-T90	EA	CABINET/DINETTE W/BACK(WRAPPED)-LEFT HAND - W/O DOORS/HDW FROM: 00-00-00 THRU: 08-21-05
26	141859-10-T90	EA	CABINET/DINETTE W/BACK(WRAPPED)-LEFT HAND - W/O DOORS/HDW FROM: 08-22-05 THRU: 99-99-99
26	141859-53-T91	EA	CABINET/DINETTE W/BACK(WRAPPED)-LEFT HAND - W/O DOORS/HDW FROM: 00-00-00 THRU: 08-21-05
26	141859-10-T91	EA	CABINET/DINETTE W/BACK(WRAPPED)-LEFT HAND - W/O DOORS/HDW FROM: 08-22-05 THRU: 99-99-99
26	141859-53-T92	EA	CABINET/DINETTE W/BACK(WRAPPED)-LEFT HAND - W/O DOORS/HDW FROM: 00-00-00 THRU: 08-21-05
26	141859-10-T92	EA	CABINET/DINETTE W/BACK(WRAPPED)-LEFT HAND - W/O DOORS/HDW FROM: 08-22-05 THRU: 99-99-99
26	141859-53-T93	EA	CABINET/DINETTE W/BACK(WRAPPED)-LEFT HAND - W/O DOORS/HDW FROM: 00-00-00 THRU: 08-21-05
26	141859-10-T93	EA	CABINET/DINETTE W/BACK(WRAPPED)-LEFT HAND - W/O DOORS/HDW FROM: 08-22-05 THRU: 99-99-99
26	141859-53-T94	EA	CABINET/DINETTE W/BACK(WRAPPED)-LEFT HAND - W/O DOORS/HDW FROM: 00-00-00 THRU: 08-21-05
26	141859-10-T94	EA	CABINET/DINETTE W/BACK(WRAPPED)-LEFT HAND - W/O DOORS/HDW FROM: 08-22-05 THRU: 99-99-99
26	141859-53-T95	EA	CABINET/DINETTE W/BACK(WRAPPED)-LEFT HAND - W/O DOORS/HDW FROM: 00-00-00 THRU: 08-21-05
26	141859-10-T95	EA	CABINET/DINETTE W/BACK(WRAPPED)-LEFT HAND - W/O DOORS/HDW FROM: 08-22-05 THRU: 99-99-99
26	141859-53-T96	EA	CABINET/DINETTE W/BACK(WRAPPED)-LEFT HAND - W/O DOORS/HDW FROM: 00-00-00 THRU: 08-21-05
26	141859-10-T96	EA	CABINET/DINETTE W/BACK(WRAPPED)-LEFT HAND - W/O DOORS/HDW FROM: 08-22-05 THRU: 99-99-99
26	141859-53-T97	EA	CABINET/DINETTE W/BACK(WRAPPED)-LEFT HAND - W/O DOORS/HDW FROM: 00-00-00 THRU: 08-21-05
26	141859-10-T97	EA	CABINET/DINETTE W/BACK(WRAPPED)-LEFT HAND - W/O DOORS/HDW FROM: 08-22-05 THRU: 99-99-99
26	141859-53-T98	EA	CABINET/DINETTE W/BACK(WRAPPED)-LEFT HAND - W/O DOORS/HDW FROM: 00-00-00 THRU: 08-21-05
26	141859-10-T98	EA	CABINET/DINETTE W/BACK(WRAPPED)-LEFT HAND - W/O DOORS/HDW FROM: 08-22-05 THRU: 99-99-99
26	141859-53-T99	EA	CABINET/DINETTE W/BACK(WRAPPED)-LEFT HAND - W/O DOORS/HDW FROM: 00-00-00 THRU: 08-21-05
26	141859-10-T99	EA	CABINET/DINETTE W/BACK(WRAPPED)-LEFT HAND - W/O DOORS/HDW FROM: 08-22-05 THRU: 99-99-99
26	141859-53-T00	EA	CABINET/DINETTE W/BACK(WRAPPED)-LEFT HAND - W/O DOORS/HDW FROM: 00-00-00 THRU: 08-21-05
26	141859-10-T00	EA	CABINET/DINETTE W/BACK(WRAPPED)-LEFT HAND - W/O DOORS/HDW FROM: 08-22-05 THRU: 99-99-99

COPYRIGHT © 2006 WINNEBAGO INDUSTRIES INC.

CABINET & APPLIANCE GROUP (CONTINUED)

CABINET & APPLIANCE LAYOUT (CONTINUED)

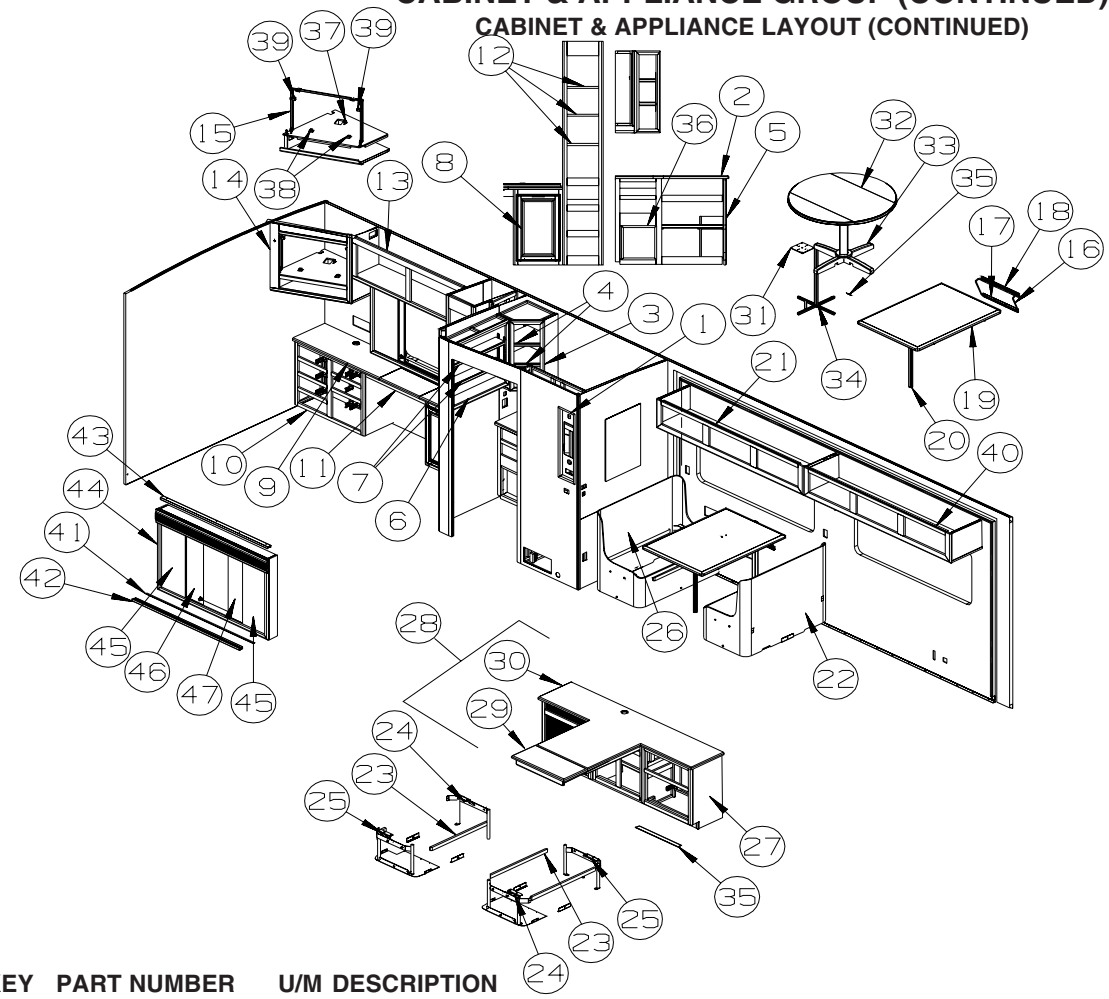

KEY	PART NUMBER	U/M	DESCRIPTION
27	P53846-01-TA0	EA	CABINET - DINETTE/COMPUTER - W/O COUNTERTOPS/DRAWERS/HDW - PORTSMOUTH OAK FROM: 00-00-00 THRU: 08-28-05
27	P57091-01-T77	EA	CABINET - DINETTE/COMPUTER - W/O COUNTERTOPS/DRAWERS/HDW - PORTSMOUTH OAK FROM: 08-29-05 THRU: 99-99-99
27	P53846-01-TA1	EA	CABINET - DINETTE/COMPUTER - W/O COUNTERTOPS/DRAWERS/HDW - CONCERT CHERRY FROM: 00-00-00 THRU: 08-28-05
27	P57091-01-T78	EA	CABINET - DINETTE/COMPUTER - W/O COUNTERTOPS/DRAWERS/HDW - CONCERT CHERRY FROM: 08-29-05 THRU: 99-99-99
27	P53846-01-TA2	EA	CABINET - DINETTE/COMPUTER - W/O COUNTERTOPS/DRAWERS/HDW - WASHED MAPLE FROM: 00-00-00 THRU: 08-28-05
27	P57091-01-T79	EA	CABINET - DINETTE/COMPUTER - W/O COUNTERTOPS/DRAWERS/HDW - WASHED MAPLE FROM: 08-29-05 THRU: 99-99-99
27	P53846-01-TA3	EA	CABINET - DINETTE/COMPUTER - W/O COUNTERTOPS/DRAWERS/HDW - SIERRA MAPLE FROM: 00-00-00 THRU: 08-28-05
27	P57091-01-T80	EA	CABINET - DINETTE/COMPUTER - W/O COUNTERTOPS/DRAWERS/HDW - SIERRA MAPLE FROM: 08-29-05 THRU: 99-99-99
28	153389-01-TA0	EA	TABLE - DINETTE/COMPUTER DESK - W/EXTENSION - PORTSMOUTH OAK FROM: 00-00-00 THRU: 08-28-05
28	157114-01-T77	EA	TABLE - DINETTE/COMPUTER DESK - W/EXTENSION - PORTSMOUTH OAK FROM: 08-29-05 THRU: 99-99-99
28	153389-01-TA1	EA	TABLE - DINETTE/COMPUTER DESK - W/EXTENSION - CONCERT CHERRY FROM: 00-00-00 THRU: 08-28-05
28	157114-01-T78	EA	TABLE - DINETTE/COMPUTER DESK - W/EXTENSION - CONCERT CHERRY FROM: 08-29-05 THRU: 99-99-99
28	153389-01-TA2	EA	TABLE - DINETTE/COMPUTER DESK - W/EXTENSION - WASHED MAPLE FROM: 00-00-00 THRU: 08-28-05
28	157114-01-T78	EA	TABLE - DINETTE/COMPUTER DESK - W/EXTENSION - CONCERT CHERRY FROM: 08-29-05 THRU: 99-99-99
28	153389-01-TA3	EA	TABLE - DINETTE/COMPUTER DESK - W/EXTENSION - SIERRA MAPLE FROM: 00-00-00 THRU: 08-28-05
28	157114-01-T80	EA	TABLE - DINETTE/COMPUTER DESK - W/EXTENSION - SIERRA MAPLE FROM: 08-29-05 THRU: 99-99-99

COPYRIGHT © 2006 WINNEBAGO INDUSTRIES INC.

CABINET & APPLIANCE GROUP (CONTINUED)

CABINET & APPLIANCE LAYOUT (CONTINUED)

KEY	PART NUMBER	U/M	DESCRIPTION
29	140889-24-SA0	EA	COUNTERTOP - COMPUTER DESK - GRAY TRANQUILITY/PORTS OAK - PORTSMOUTH OAK
29	140889-24-SA1	EA	COUNTERTOP - COMPUTER DESK - GRAY TRANQUILITY/CHERRY - CONCERT CHERRY
29	140889-24-SA2	EA	COUNTERTOP - COMPUTER DESK - GRAY TRANQUILITY/WASHED MAPLE - WASHED MAPLE
29	140889-24-SA3	EA	COUNTERTOP - COMPUTER DESK - GRAY TRANQUILITY/SIERRA MAPLE - SIERRA MAPLE
30	140889-29-TA0	EA	COUNTERTOP - COMPUTER DESK - PORTSMOUTH OAK FROM: 00-00-00 THRU: 08-28-05
30	140889-43-T77	EA	COUNTERTOP - LAMINATED - PORTSMOUTH OAK FROM: 08-29-05 THRU: 99-99-99
30	140889-29-TA1	EA	COUNTERTOP - COMPUTER DESK - CONCERT CHERRY FROM: 00-00-00 THRU: 08-28-05
30	140889-43-T78	EA	COUNTERTOP - LAMINATED - CONCERT CHERRY FROM: 08-29-05 THRU: 99-99-99
30	140889-29-TA2	EA	COUNTERTOP - COMPUTER DESK - WASHED MAPLE FROM: 00-00-00 THRU: 08-28-05
30	140889-43-T79	EA	COUNTERTOP - LAMINATED - WASHED MAPLE FROM: 08-29-05 THRU: 99-99-99
30	140889-29-TA3	EA	COUNTERTOP - COMPUTER DESK - SIERRA MAPLE FROM: 00-00-00 THRU: 08-28-05
30	140889-43-T80	EA	COUNTERTOP - LAMINATED - SIERRA MAPLE FROM: 08-29-05 THRU: 99-99-99
31	148038-01-04B	EA	PLATE - TABLE TOP - BLACK
32	149677-11-T77	EA	TABLE TOP ONLY - ROUND DROP LEAF - W/O PEDESTAL - PORTSMOUTH OAK
32	149677-11-T78	EA	TABLE TOP ONLY - ROUND DROP LEAF - W/O PEDESTAL - CONCERT CHERRY
32	149677-11-T79	EA	TABLE TOP ONLY - ROUND DROP LEAF - W/O PEDESTAL - WASHED MAPLE
32	149677-11-T00	EA	TABLE TOP ONLY - ROUND DROP LEAF - W/O PEDESTAL - SIERRA MAPLE
33	149677-13-S64	EA	PEDESTAL - TABLE LEG - PORTSMOUTH OAK
33	149677-13-S65	EA	PEDESTAL - TABLE LEG - CONCERT CHERRY
33	149677-13-S66	EA	PEDESTAL - TABLE LEG - WASHED MAPLE
33	149677-13-S67	EA	PEDESTAL - TABLE LEG - SIERRA MAPLE
34	149810-01-02B	EA	BASE/FRAME - F/TABLE PEDESTAL - E-COATED
35	105402-03-000	EA	STRAP - DINING CHAIR/TIEDOWN - 18"
36	137602-07-R89	EA	POCKET - MONITOR PANEL - PORTSMOUTH OAK
36	137602-07-R90	EA	POCKET - MONITOR PANEL - CONCERT CHERRY
36	137602-07-RW5	EA	POCKET - MONITOR PANEL - WASHED MAPLE
36	137602-07-S79	EA	POCKET - MONITOR PANEL - SIERRA MAPLE
37	152024-01-02B	EA	ANGLE/FORMED - W/HOLES - E-COATED
38	152025-03-02B	EA	ANGLE/FORMED - W/O STUD - E-COATED
39	152665-01-01A	EA	CAP - TUBE - 3/4" X 3/4" X 1" - RUBBER/BLACK
40	155388-01-T77	EA	CABINET - OVERHEAD/COUCH - W/O DOORS/HDW - PORTSMOUTH OAK FROM: 00-00-00 THRU: 08-28-05
40	157099-01-T77	EA	CABINET - OVERHEAD/COUCH - W/O DOORS/HDW - PORTSMOUTH OAK FROM: 08-29-05 THRU: 99-99-99
40	155388-01-T78	EA	CABINET - OVERHEAD/COUCH - W/O DOORS/HDW - CONCERT CHERRY FROM: 00-00-00 THRU: 08-28-05
40	157099-01-T78	EA	CABINET - OVERHEAD/COUCH - W/O DOORS/HDW - CONCERT CHERRY FROM: 08-29-05 THRU: 99-99-99
40	155388-01-T79	EA	CABINET - OVERHEAD/COUCH - W/O DOORS/HDW - WASHED MAPLE FROM: 00-00-00 THRU: 08-28-05
40	157099-01-T79	EA	CABINET - OVERHEAD/COUCH - W/O DOORS/HDW - WASHED MAPLE FROM: 08-29-05 THRU: 99-99-99
40	155388-01-T80	EA	CABINET - OVERHEAD/COUCH - W/O DOORS/HDW - SIERRA MAPLE FROM: 00-00-00 THRU: 08-28-05
40	157099-01-T80	EA	CABINET - OVERHEAD/COUCH - W/O DOORS/HDW - SIERRA MAPLE FROM: 08-29-05 THRU: 99-99-99
40	155388-02-T77	EA	CABINET - OVERHEAD/COUCH - W/O DOORS/HDW - PORTSMOUTH OAK - DINNING TABLE W/CHAIRS FROM: 00-00-00 THRU: 08-28-05
40	157099-02-T77	EA	CABINET - OVERHEAD/COUCH - W/O DOORS/HDW - PORTSMOUTH OAK - DINNING TABLE W/CHAIRS FROM: 08-29-05 THRU: 99-99-99
40	155388-02-T78	EA	CABINET - OVERHEAD/COUCH - W/O DOORS/HDW - CONCERT CHERRY - DINNING TABLE W/CHAIRS FROM: 00-00-00 THRU: 08-28-05
40	157099-02-T78	EA	CABINET - OVERHEAD/COUCH - W/O DOORS/HDW - CONCERT CHERRY - DINNING TABLE W/CHAIRS FROM: 08-29-05 THRU: 99-99-99
40	155388-02-T79	EA	CABINET - OVERHEAD/COUCH - W/O DOORS/HDW - WASHED MAPLE - DINNING TABLE W/CHAIRS FROM: 00-00-00 THRU: 08-28-05

COPYRIGHT © 2006 WINNEBAGO INDUSTRIES INC.

CABINET & APPLIANCE GROUP (CONTINUED)

CABINET & APPLIANCE LAYOUT (CONTINUED)

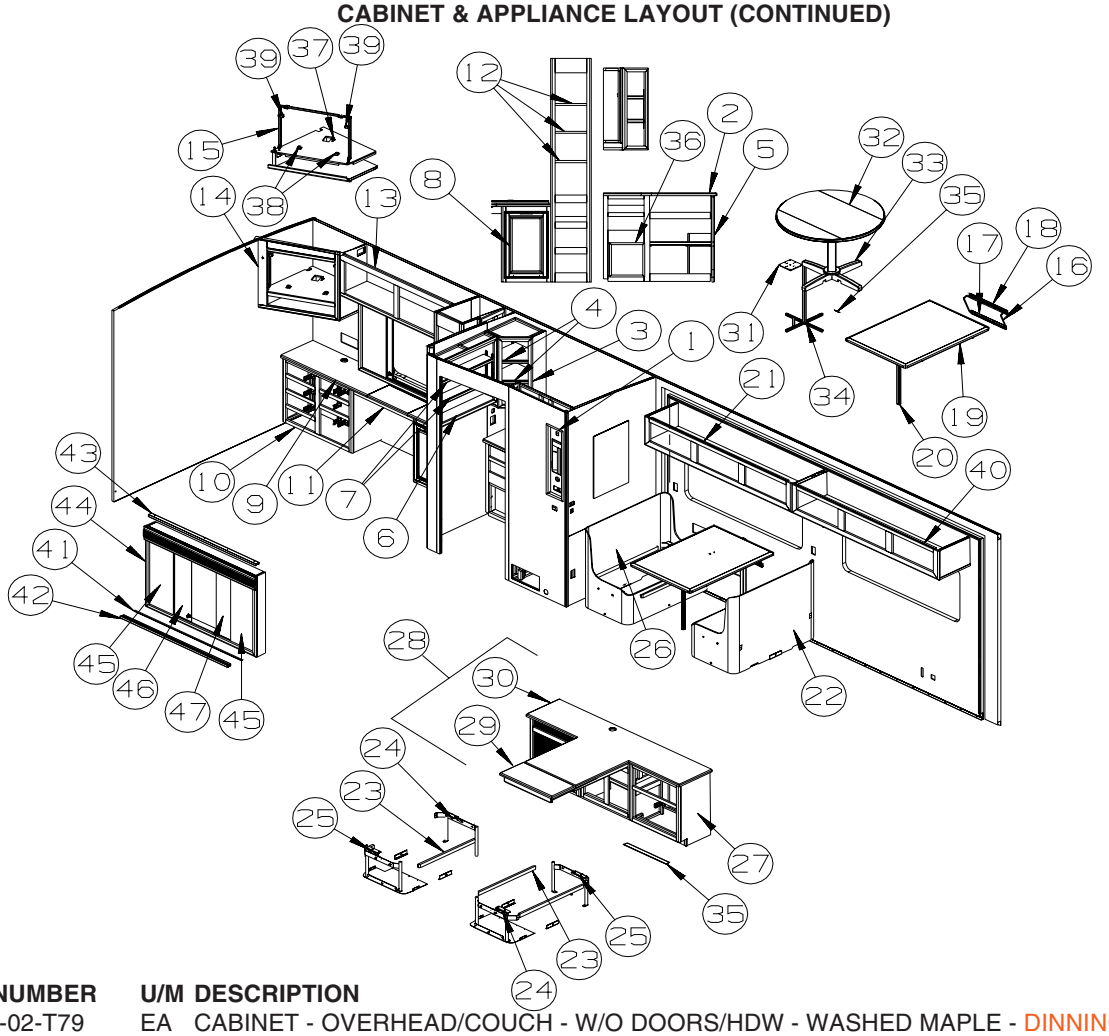

KEY	PART NUMBER	U/M	DESCRIPTION
40	157099-02-T79	EA	CABINET - OVERHEAD/COUCH - W/O DOORS/HDW - WASHED MAPLE - DINNING TABLE W/CHAIRS FROM: 08-29-05 THRU: 99-99-99
40	155388-02-T80	EA	CABINET - OVERHEAD/COUCH - W/O DOORS/HDW - SIERRA MAPLE - DINNING TABLE W/CHAIRS FROM: 00-00-00 THRU: 08-28-05
40	157099-02-T80	EA	CABINET - OVERHEAD/COUCH - W/O DOORS/HDW - SIERRA MAPLE - DINNING TABLE W/CHAIRS FROM: 08-29-05 THRU: 99-99-99
41	113797-12-01A	EA	STRIP - BLACK PLASTIC W/SELF ADHESIVE- .13" X .7" X 52.9"
42	116698-05-01A	EA	TRACK - DOOR/SLIDING - LOWER - 52.9" - OFF WHITE
43	116699-05-01A	EA	TRACK - DOOR/SLIDING - UPPER - 52.9" - OFF WHITE
44	155722-01-T89	EA	CABINET - MIRROR/SLIDING - PORTSMOUT OAK
44	155722-01-T90	EA	CABINET - MIRROR/SLIDING - CONCERT CHERRY
44	155722-01-T91	EA	CABINET - MIRROR/SLIDING - WASHED MAPLE
44	155722-01-T92	EA	CABINET - MIRROR/SLIDING - SIERRA MAPLE
45	155722-14-T89	EA	MIRROR/STATIONARY - F/CABINET - PORTSMOUT OAK
45	155722-14-T90	EA	MIRROR/STATIONARY - F/CABINETL - CONCERT CHERRY
45	155722-14-T91	EA	MIRROR/STATIONARY - F/CABINET - WASHED MAPLE
45	155722-14-T92	EA	MIRROR/STATIONARY - F/CABINET - SIERRA MAPLE
	140374-83-000	EA	MIRROR - SAFETY GLASS - 12.3" X 33.4"
46	155722-16-T89	EA	MIRROR/SLIDING - F/CABINET - LEFT HAND - W/PULL - PORTSMOUT OAK
46	155722-16-T90	EA	MIRROR/SLIDING - F/CABINET - LEFT HAND - W/PULLL - CONCERT CHERRY
46	155722-16-T91	EA	MIRROR/SLIDING - F/CABINET - LEFT HAND - W/PULL - WASHED MAPLE
46	155722-16-T92	EA	MIRROR/SLIDING - F/CABINET - LEFT HAND - W/PULL - SIERRA MAPLE
	140374-82-000	EA	MIRROR - SAFETY GLASS - 14.3" X 33.4"
47	155722-18-T89	EA	MIRROR/SLIDING - F/CABINET - RIGHT HAND - W/PULL - PORTSMOUT OAK
47	155722-18-T90	EA	MIRROR/SLIDING - F/CABINET - RIGHT HAND - W/PULL - CONCERT CHERRY
47	155722-18-T91	EA	MIRROR/SLIDING - F/CABINET - RIGHT HAND - W/PULL - WASHED MAPLE
47	155722-18-T92	EA	MIRROR/SLIDING - F/CABINET - RIGHT HAND - W/PULL - SIERRA MAPLE
	140374-82-000	EA	MIRROR - SAFETY GLASS - 14.3" X 33.4"

COPYRIGHT © 2006 WINNEBAGO INDUSTRIES INC.

CABINET & APPLIANCE GROUP (CONTINUED)

CABINET & APPLIANCE LAYOUT (CONTINUED)

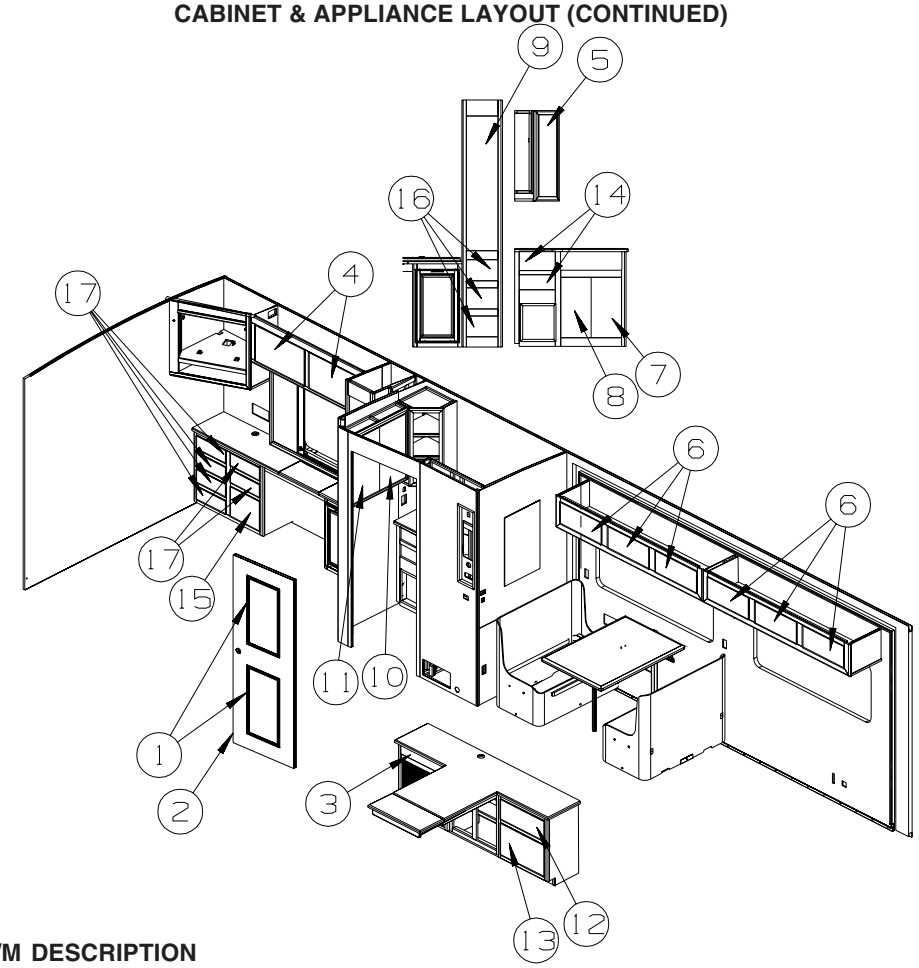

KEY	PART NUMBER	U/M	DESCRIPTION
1	141993-03-P63	EA	FRAME/PICTURE - F/BATH DOOR - 15" X 27.8" - PORTSMOUTH OAK
1	141993-03-P64	EA	FRAME/PICTURE - F/BATH DOOR - 15" X 27.8" - CONCERT CHERRY
1	141993-03-P28	EA	FRAME/PICTURE - F/BATH DOOR - 15" X 27.8" - WASHED MAPLE
1	141993-03-S67	EA	FRAME/PICTURE - F/BATH DOOR - 15" X 27.8" - SIERRA MAPLE
2	153095-03-T77	EA	DOOR - BATH - 27.5" X 75.7" - W/O FRAME(PICTURE)TRIM/HDW - PORTSMOUTH OAK
2	153095-03-T78	EA	DOOR - BATH - 27.5" X 75.7" - W/O FRAME(PICTURE)TRIM/HDW - CONCERT CHERRY
2	153095-03-T79	EA	DOOR - BATH - 27.5" X 75.7" - W/O FRAME(PICTURE)TRIM/HDW - WASHED MAPLE
2	153095-03-T80	EA	DOOR - BATH - 27.5" X 75.7" - W/O FRAME(PICTURE)TRIM/HDW - SIERRA MAPLE
3	P36353-03-TB4	EA	DRAWER-KEYBOARD - W/DRAWER SLIDES - W/O CABINET SLIDES/HDW - PORTSMOUTH OAK
3	P36353-03-TB5	EA	DRAWER-KEYBOARD - W/DRAWER SLIDES - W/O CABINET SLIDES/HDW - CONCERT CHERRY
3	P36353-03-TB6	EA	DRAWER-KEYBOARD - W/DRAWER SLIDES - W/O CABINET SLIDES/HDW - WASHED MAPLE
3	P36353-03-TB7	EA	DRAWER-KEYBOARD - W/DRAWER SLIDES - W/O CABINET SLIDES/HDW - SIERRA MAPLE
4	141522-C1-T89	EA	DOOR - ARCHED/PENCIL EDGE/HORIZ - 15.3" X 25.6" - W/O HDW - PORTSMOUTH OAK
4	141522-C1-T90	EA	DOOR - ARCHED/PENCIL EDGE/HORIZ - 15.3" X 25.6" - W/O HDW - CONCERT CHERRY
4	141522-C1-T91	EA	DOOR - ARCHED/PENCIL EDGE/HORIZ - 15.3" X 25.6" - W/O HDW - WASHED MAPLE
4	141522-C1-T92	EA	DOOR - ARCHED/PENCIL EDGE/HORIZ - 15.3" X 25.6" - W/O HDW - SIERRA MAPLE
5	141520-30-T89	EA	DOOR - ARCHED/PENCIL EDGE/RIGHT HAND -10" X 29.5"-W/O HDW - PORTSMOUTH OAK
5	141520-30-T90	EA	DOOR - ARCHED/PENCIL EDGE/RIGHT HAND -10" X 29.5"-W/O HDW - CONCERT CHERRY
5	141520-30-T91	EA	DOOR - ARCHED/PENCIL EDGE/RIGHT HAND -10" X 29.5"-W/O HDW - WASHED MAPLE
5	141520-30-T92	EA	DOOR - ARCHED/PENCIL EDGE/RIGHT HAND -10" X 29.5"-W/O HDW - SIERRA MAPLE
6	141522-31-TB4	EA	DOOR - ARCHED/PENCIL EDGE/HORIZ - 10.2" X 21.4" - W/O HDW - PORTSMOUTH OAK
6	141522-31-TB5	EA	DOOR - ARCHED/PENCIL EDGE/HORIZ - 10.2" X 21.4" - W/O HDW - CONCERT CHERRY
6	141522-31-TB6	EA	DOOR - ARCHED/PENCIL EDGE/HORIZ - 10.2" X 21.4" - W/O HDW - WASHED MAPLE
6	141522-31-TB7	EA	DOOR - ARCHED/PENCIL EDGE/HORIZ - 10.2" X 21.4" - W/O HDW - SIERRA MAPLE
7	136955-41-TB4	EA	DOOR - RAISED PANEL/PENCIL EDGE - 10.8" X 21.8" - W/O HDW - PORTSMOUTH OAK
7	136955-41-TB5	EA	DOOR - RAISED PANEL/PENCIL EDGE - 10.8" X 21.8" - W/O HDW - CONCERT CHERRY
7	136955-41-TB6	EA	DOOR - RAISED PANEL/PENCIL EDGE - 10.8" X 21.8" - W/O HDW - WASHED MAPLE
7	136955-41-TB7	EA	DOOR - RAISED PANEL/PENCIL EDGE - 10.8" X 21.8" - W/O HDW - SIERRA MAPLE
8	136955-42-TB4	EA	DOOR - RAISED PANEL/PENCIL EDGE - 10.8" X 21.8" - W/O HDW - PORTSMOUTH OAK
8	136955-42-TB5	EA	DOOR - RAISED PANEL/PENCIL EDGE - 10.8" X 21.8" - W/O HDW - CONCERT CHERRY
8	136955-42-TB6	EA	DOOR - RAISED PANEL/PENCIL EDGE - 10.8" X 21.8" - W/O HDW - WASHED MAPLE
8	136955-42-TB7	EA	DOOR - RAISED PANEL/PENCIL EDGE - 10.8" X 21.8" - W/O HDW - SIERRA MAPLE

COPYRIGHT © 2006 WINNEBAGO INDUSTRIES INC.

CABINET & APPLIANCE GROUP (CONTINUED)

CABINET & APPLIANCE LAYOUT (CONTINUED)

KEY	PART NUMBER	U/M	DESCRIPTION
9	141520-76-T89	EA	DOOR - ARCHED/PENCIL EDGE/RIGHT HAND -12"X48"-W/O HDW - PORTSMOUTH OAK
9	141520-76-T90	EA	DOOR - ARCHED/PENCIL EDGE/RIGHT HAND -12"X48"-W/O HDW - CONCERT CHERRY
9	141520-76-T91	EA	DOOR - ARCHED/PENCIL EDGE/RIGHT HAND -12"X48"-W/O HDW - WASHED MAPLE
9	141520-76-T92	EA	DOOR - ARCHED/PENCIL EDGE/RIGHT HAND -12"X48"-W/O HDW - SIERRA MAPLE
10	141520-93-T89	EA	DOOR - ARCHED/PENCIL EDGE/RIGHT HAND -13.6"X27.1"-W/O HDW - PORTSMOUTH OAK
10	141520-93-T90	EA	DOOR - ARCHED/PENCIL EDGE/RIGHT HAND -13.6"X27.1"-W/O HDW - CONCERT CHERRY
10	141520-93-T91	EA	DOOR - ARCHED/PENCIL EDGE/RIGHT HAND -13.6"X27.1"-W/O HDW - WASHED MAPLE
10	141520-93-T92	EA	DOOR - ARCHED/PENCIL EDGE/RIGHT HAND -13.6"X27.1"-W/O HDW - SIERRA MAPLE
11	141518-92-T89	EA	DOOR - ARCHED/PENCIL EDGE/LEFT HAND-13.6" X 27.1" -W/O HDW - PORTSMOUTH OAK
11	141518-92-T90	EA	DOOR - ARCHED/PENCIL EDGE/LEFT HAND-13.6" X 27.1" -W/O HDW - CONCERT CHERRY
11	141518-92-T91	EA	DOOR - ARCHED/PENCIL EDGE/LEFT HAND-13.6" X 27.1" -W/O HDW - WASHED MAPLE
11	141518-92-T92	EA	DOOR - ARCHED/PENCIL EDGE/LEFT HAND-13.6" X 27.1" -W/O HDW - SIERRA MAPLE
12	153121-30-TB4	EA	DRAWER - PENCIL EDGE - 18.6"W X 13.8"D - W/O SLIDES/HDW - PORTSMOUTH OAK
12	153121-30-TB5	EA	DRAWER - PENCIL EDGE - 18.6"W X 13.8"D - W/O SLIDES/HDW - CONCERT CHERRY
12	153121-30-TB6	EA	DRAWER - PENCIL EDGE - 18.6"W X 13.8"D - W/O SLIDES/HDW - WASHED MAPLE
12	153121-30-TB7	EA	DRAWER - PENCIL EDGE - 18.6"W X 13.8"D - W/O SLIDES/HDW - SIERRA MAPLE
13	153121-32-TB4	EA	DRAWER - PENCIL EDGE - 18.6"W X 13.8"D - W/O SLIDES/HDW - PORTSMOUTH OAK
13	153121-32-TB5	EA	DRAWER - PENCIL EDGE - 18.6"W X 13.8"D - W/O SLIDES/HDW - CONCERT CHERRY
13	153121-32-TB6	EA	DRAWER - PENCIL EDGE - 18.6"W X 13.8"D - W/O SLIDES/HDW - WASHED MAPLE
13	153121-32-TB7	EA	DRAWER - PENCIL EDGE - 18.6"W X 13.8"D - W/O SLIDES/HDW - SIERRA MAPLE
14	153121-FA-T89	EA	DRAWER - PENCIL EDGE - 11.6"W X 11.8"D - W/O SLIDES/HDW - PORTSMOUTH OAK
14	153121-FA-T90	EA	DRAWER - PENCIL EDGE - 11.6"W X 11.8"D - W/O SLIDES/HDW - CONCERT CHERRY
14	153121-FA-T91	EA	DRAWER - PENCIL EDGE - 11.6"W X 11.8"D - W/O SLIDES/HDW - WASHED MAPLE
14	153121-FA-T92	EA	DRAWER - PENCIL EDGE - 11.6"W X 11.8"D - W/O SLIDES/HDW - SIERRA MAPLE
15	153121-FG-T89	EA	DRAWER - PENCIL EDGE - 13.5"W X 11.8"D - W/O SLIDES/HDW - PORTSMOUTH OAK
15	153121-FG-T90	EA	DRAWER - PENCIL EDGE - 13.5"W X 11.8"D - W/O SLIDES/HDW - CONCERT CHERRY
15	153121-FG-T91	EA	DRAWER - PENCIL EDGE - 13.5"W X 11.8"D - W/O SLIDES/HDW - WASHED MAPLE
15	153121-FG-T92	EA	DRAWER - PENCIL EDGE - 13.5"W X 11.8"D - W/O SLIDES/HDW - SIERRA MAPLE
16	153121-H8-T56	EA	DRAWER - PENCIL EDGE - 10"W X 17.7"D - W/O SLIDES/HDW - PORTSMOUTH OAK
16	153121-H8-T33	EA	DRAWER - PENCIL EDGE - 10"W X 17.7"D - W/O SLIDES/HDW - CONCERT CHERRY
16	153121-H8-T34	EA	DRAWER - PENCIL EDGE - 10"W X 17.7"D - W/O SLIDES/HDW - WASHED MAPLE
16	153121-H8-T32	EA	DRAWER - PENCIL EDGE - 10"W X 17.7"D - W/O SLIDES/HDW - SIERRA MAPLE
17	153121-U9-T68	EA	DRAWER - PENCIL EDGE - 13.5"W X 11.8"D - W/O SLIDES/HDW - PORTSMOUTH OAK
17	153121-U9-T69	EA	DRAWER - PENCIL EDGE - 13.5"W X 11.8"D - W/O SLIDES/HDW - CONCERT CHERRY
17	153121-U9-T70	EA	DRAWER - PENCIL EDGE - 13.5"W X 11.8"D - W/O SLIDES/HDW - WASHED MAPLE
17	153121-U9-TP3	EA	DRAWER - PENCIL EDGE - 13.5"W X 11.8"D - W/O SLIDES/HDW - SIERRA MAPLE

COPYRIGHT © 2006 WINNEBAGO INDUSTRIES INC.

CABINET & APPLIANCE GROUP (CONTINUED)

CABINET & APPLIANCE LAYOUT (CONTINUED)

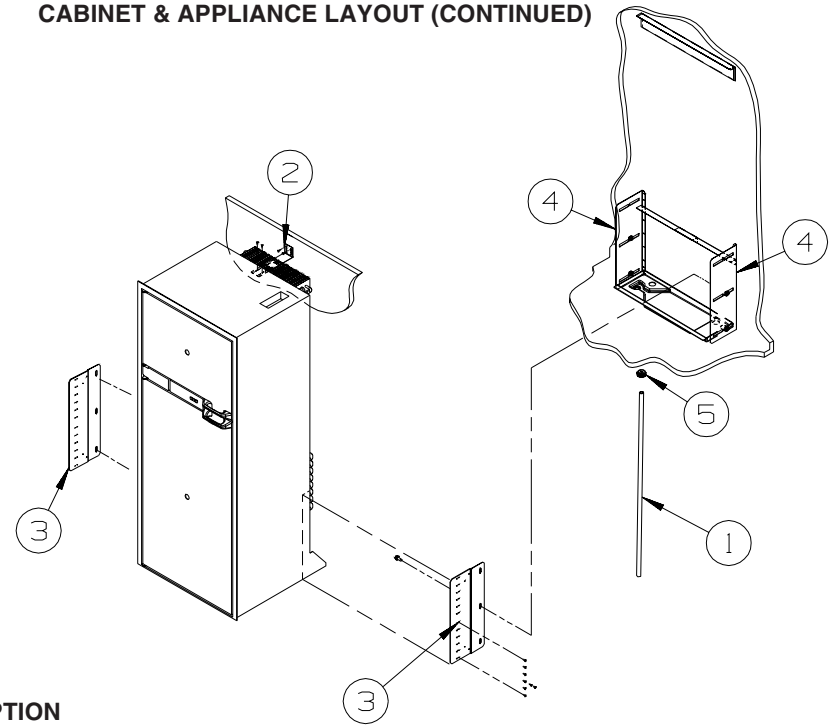

KEY	PART NUMBER	U/M	DESCRIPTION
1	112176-01-000	FT	TUBING - VINYL - REINFORCED - 1/2" ID
2	145445-02-02B	EA	STRAP - REFRIGERATOR - E-COATED
3	150740-01-02B	EA	BRACKET - REFRIGERATOR - E-COATED
4	150740-02-02B	EA	BRACKET - REFRIGERATOR - E-COATED
5	152417-01-01A	EA	CLAMP/RATCHET - F/REFRIGERATOR DRIP TRAY HOSE - BLACK

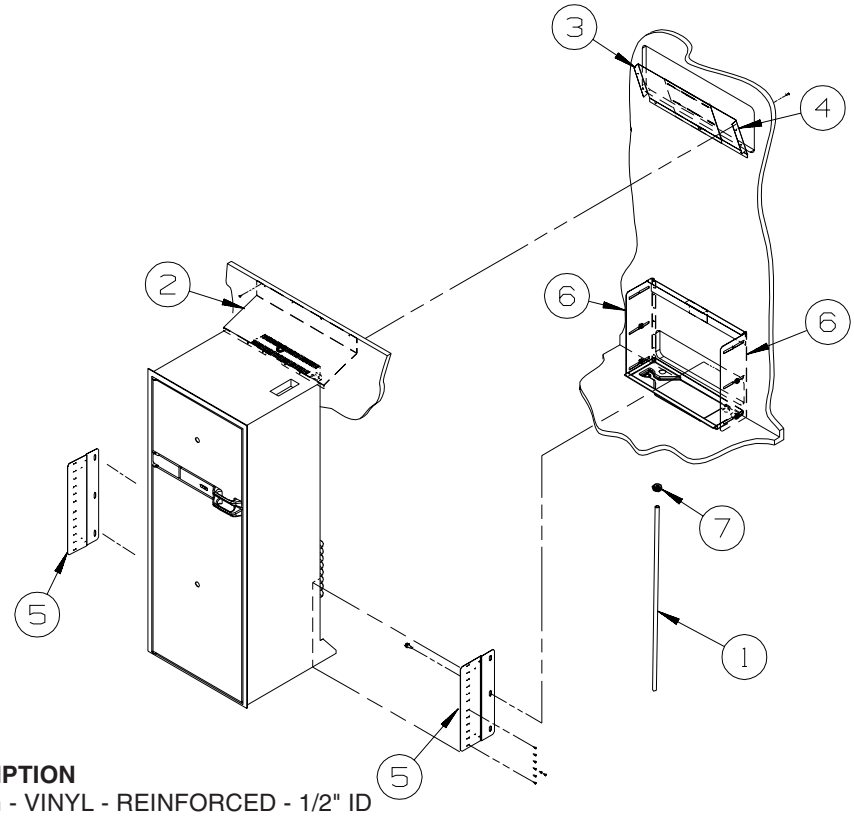

G38T
UP TO
03-27-06

KEY	PART NUMBER	U/M	DESCRIPTION
1	112176-01-000	FT	TUBING - VINYL - REINFORCED - 1/2" ID
2	136966-04-02B	EA	BAFFLE - REFRIGERATOR - E-COATED
3	143195-01-02B	EA	BAFFLE - REFRIGERATOR - E-COATED
4	143195-02-02B	EA	BAFFLE - REFRIGERATOR - E-COATED
5	150740-01-02B	EA	BRACKET - REFRIGERATOR - E-COATED
6	150740-02-02B	EA	BRACKET - REFRIGERATOR - E-COATED
7	152417-01-01A	EA	CLAMP/RATCHET - F/REFRIDGERATOR DRIP TRAY HOSE - BLACK

COPYRIGHT © 2006 WINNEBAGO INDUSTRIES INC.

CABINET & APPLIANCE GROUP (CONTINUED)

CABINET & APPLIANCE LAYOUT (CONTINUED)

G38T
AFTER
03-28-06

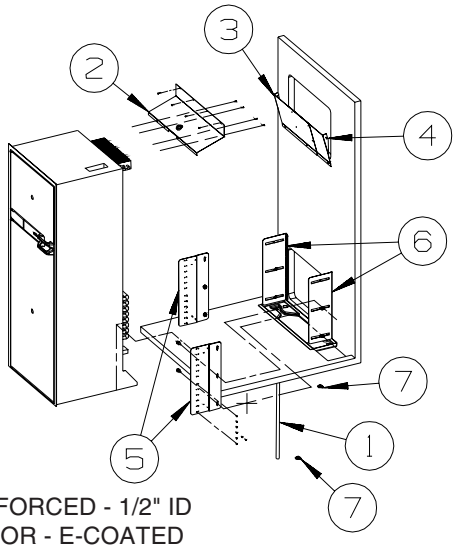

KEY	PART NUMBER	U/M	DESCRIPTION
1	112176-01-000	FT	TUBING - VINYL - REINFORCED - 1/2" ID
2	136966-04-02B	EA	BAFFLE - REFRIGERATOR - E-COATED
3	143195-03-02B	EA	BAFFLE - REFRIGERATOR - E-COATED
4	143195-04-02B	EA	BAFFLE - REFRIGERATOR - E-COATED
5	150740-01-02B	EA	BRACKET - REFRIGERATOR - E-COATED
6	150740-02-02B	EA	BRACKET - REFRIGERATOR - E-COATED
7	152417-01-01A	EA	CLAMP/RATCHET - F/REFRIDGERATOR DRIP TRAY HOSE - BLACK

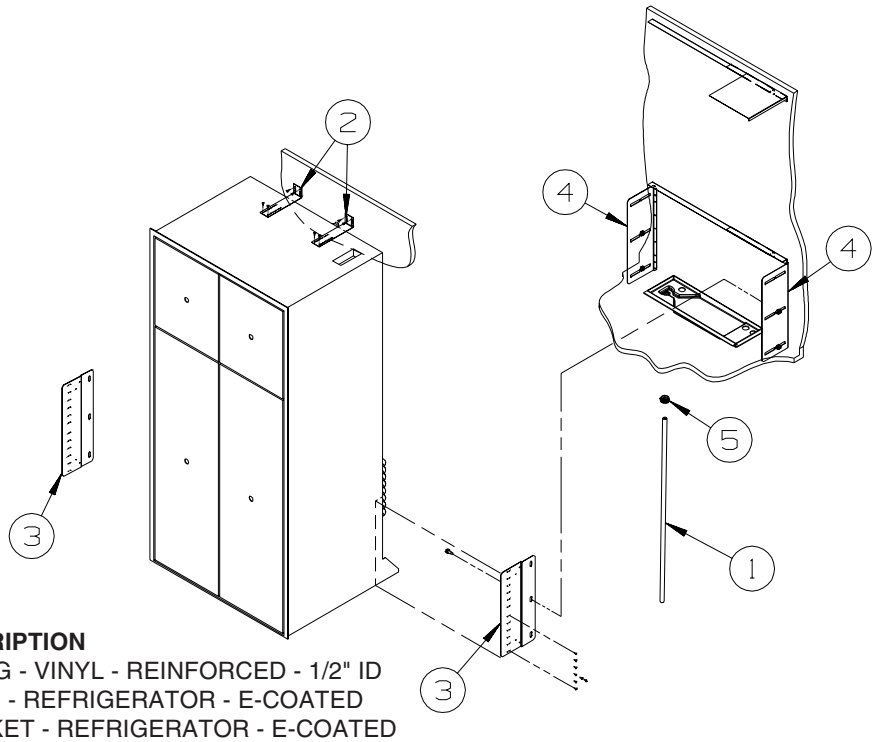

KEY	PART NUMBER	U/M	DESCRIPTION
1	112176-01-000	FT	TUBING - VINYL - REINFORCED - 1/2" ID
2	145445-02-02B	EA	STRAP - REFRIGERATOR - E-COATED
3	150740-01-02B	EA	BRACKET - REFRIGERATOR - E-COATED
4	150740-02-02B	EA	BRACKET - REFRIGERATOR - E-COATED
5	152417-01-01A	EA	CLAMP/RATCHET - F/REFRIDGERATOR DRIP TRAY HOSE - BLACK

COPYRIGHT © 2006 WINNEBAGO INDUSTRIES INC.

CABINET & APPLIANCE GROUP (CONTINUED)

CABINET & APPLIANCE LAYOUT (CONTINUED)

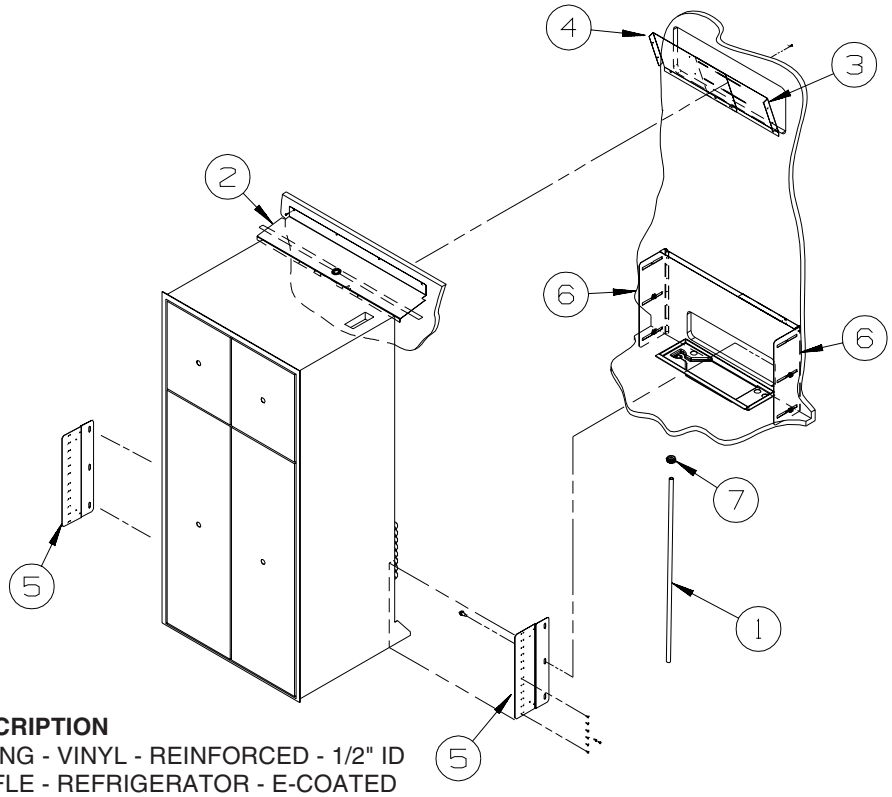

G38T UP TO 03-27-06

KEY	PART NUMBER	U/M	DESCRIPTION
1	112176-01-000	FT	TUBING - VINYL - REINFORCED - 1/2" ID
2	136966-03-02B	EA	BAFFLE - REFRIGERATOR - E-COATED
3	143195-01-02B	EA	BAFFLE - REFRIGERATOR - E-COATED
4	143195-02-02B	EA	BAFFLE - REFRIGERATOR - E-COATED
5	150740-01-02B	EA	BRACKET - REFRIGERATOR - E-COATED
6	150740-02-02B	EA	BRACKET - REFRIGERATOR - E-COATED
7	152417-01-01A	EA	CLAMP/RATCHET - F/REFRIDGERATOR DRIP TRAY HOSE - BLACK

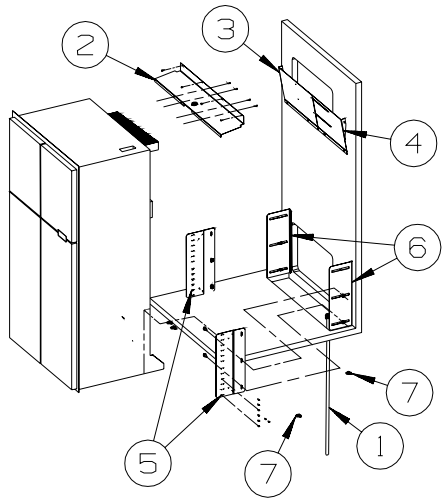

G38T AFTER 03-28-06

KEY	PART NUMBER	U/M	DESCRIPTION
1	112176-01-000	FT	TUBING - VINYL - REINFORCED - 1/2" ID
2	136966-04-02B	EA	BAFFLE - REFRIGERATOR - E-COATED
3	143195-01-02B	EA	BAFFLE - REFRIGERATOR - E-COATED
4	143195-02-02B	EA	BAFFLE - REFRIGERATOR - E-COATED
5	150740-01-02B	EA	BRACKET - REFRIGERATOR - E-COATED
6	150740-02-02B	EA	BRACKET - REFRIGERATOR - E-COATED
7	152417-01-01A	EA	CLAMP/RATCHET - F/REFRIDGERATOR DRIP TRAY HOSE - BLACK

COPYRIGHT © 2006 WINNEBAGO INDUSTRIES INC.

CABINET & APPLIANCE GROUP (CONTINUED)

CABINET & APPLIANCE LAYOUT (CONTINUED)

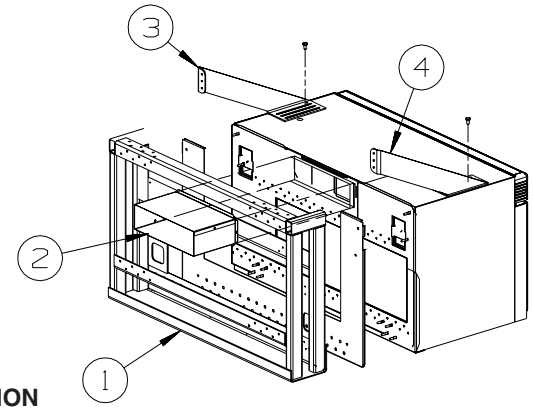

G35A, G38J

KEY	PART NUMBER	U/M	DESCRIPTION
1	137824-06-02B	EA	BRACKET - MICROWAVE - E-COATED
2	140093-06-02B	EA	DUCT - E-COATED
3	153314-01-02B	EA	BRACKET/SUPPORT - MICROWAVE - E-COATED
4	153314-02-02B	EA	BRACKET/SUPPORT - MICROWAVE - E-COATED

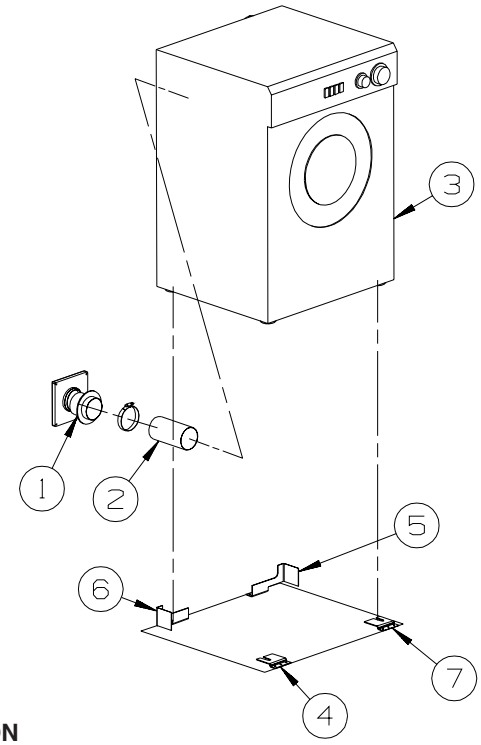

KEY	PART NUMBER	U/M	DESCRIPTION
1	146292-01-01A	EA	COVER - DRYER VENT - BRIGHT WHITE
1	146292-01-02A	EA	COVER - DRYER VENT - BLACK - FULL BODY PAINT
1	146292-02-01A	EA	DRYER VENT - INNER - BRIGHT WHITE
1	146292-02-02A	EA	DRYER VENT - INNER - BLACK - FULL BODY PAINT
2	116653-02-000	FT	DUCT - FLEXIBLE - 3' COMPRESSED/8' EXTENDED
3	153204-01-01A	EA	WASHER/DRYER - VENTED - UL/CSA - WHITE
4	111913-02-04B	EA	BRACKET/WASHER - TIE DOWN - BLACK
5	113795-01-02B	EA	BRACKET - WASHER - E-COATED
5	113795-03-02B	EA	BRACKET - WASHER - E-COATED - F36M
6	113795-02-02B	EA	BRACKET - WASHER - E-COATED
6	113795-04-02B	EA	BRACKET - WASHER - E-COATED - F36M
7	111913-03-04B	EA	BRACKET/WASHER - TIE DOWN - BLACK
	141523-01-01A	EA	LABEL - WASHER/DRYER BRACKETS - BLACK/WHITE
	157665-01-000	GL	RV ANTIFREEZE - 50 POTABLE WTR

COPYRIGHT © 2006 WINNEBAGO INDUSTRIES INC.

CABINET & APPLIANCE GROUP (CONTINUED)

COMPONENT PARTS FOR CABINET & APPLIANCE LAYOUT

119267-12-02A

KEY	PART NUMBER	U/M	DESCRIPTION	VENDOR NO.
	119267-04-700	EA	FILTER-GREASE	BOO2
	119267-04-703	EA	PLATE - MOUNTING	FANGTB003MRY0
	119267-04-704	EA	LIGHT COVER-F/MOD R1480/1850	FANGKB009MRYO
	119267-04-705	EA	SCREW	LX-BZB011MREO
	119267-12-701	EA	SUPPORT - F/GLASS TRAY	FROLPB020MRKO
	119267-12-702	EA	RACK - HIGH	FAMI-B006MR0
	119267-12-703	EA	RACK - LOW	FAMI-B005MR0
	119267-12-704	EA	LOUVER - EXHAUST	PDIF-BO13MRKO

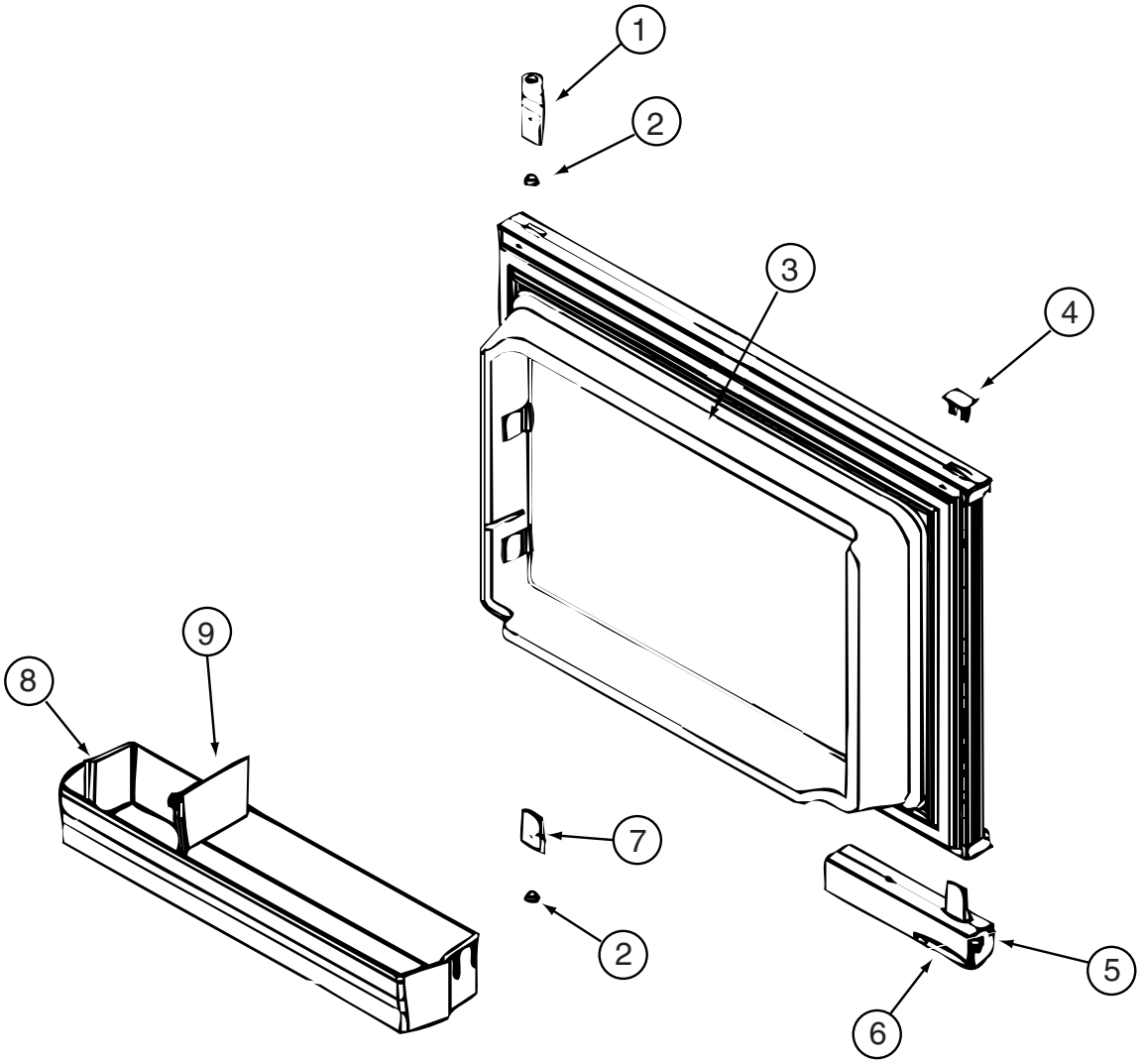

120075-16-01A, 120075-17-01A, 120075-18-01A, 120075-19-01A, 120075-21-01A, 122075-22-01A

KEY	PART NUMBER	U/M	DESCRIPTION	VENDOR NO.
1	120075-01-701	EA	HINGE-TOP RH/BOTTOM LH(DOOR)	618511
2	121568-03-701	EA	BUSHING - HINGE PIN/GRAY	619671
3	120075-16-700	EA	LINER/DOOR-UPR WRAPPED SS	623272
4	120075-01-702	EA	CAP, (HINGE PLUG)	618160
5	120075-12-700	EA	HANDLE(CONTOUR) TOP LH/BTM RH	621105
5	120075-12-701	EA	HANDLE(CONTOUR) TOP RH/BTM LH	621104
6	121568-03-705	EA	STORAGE LATCH - GRAY	619648
7	120075-01-705	EA	HINGE-TOP LH/BOTTOM RH(DOOR)	618510
8	120075-07-700	EA	DOOR BIN - SMALL/CLEAR	619006
9	120075-07-701	EA	DIVIDER/DOOR BIN CLEAR	619008

COPYRIGHT © 2006 WINNEBAGO INDUSTRIES INC.

CABINET & APPLIANCE GROUP (CONTINUED)

COMPONENT PARTS FOR CABINET & APPLIANCE LAYOUT (CONTINUED)

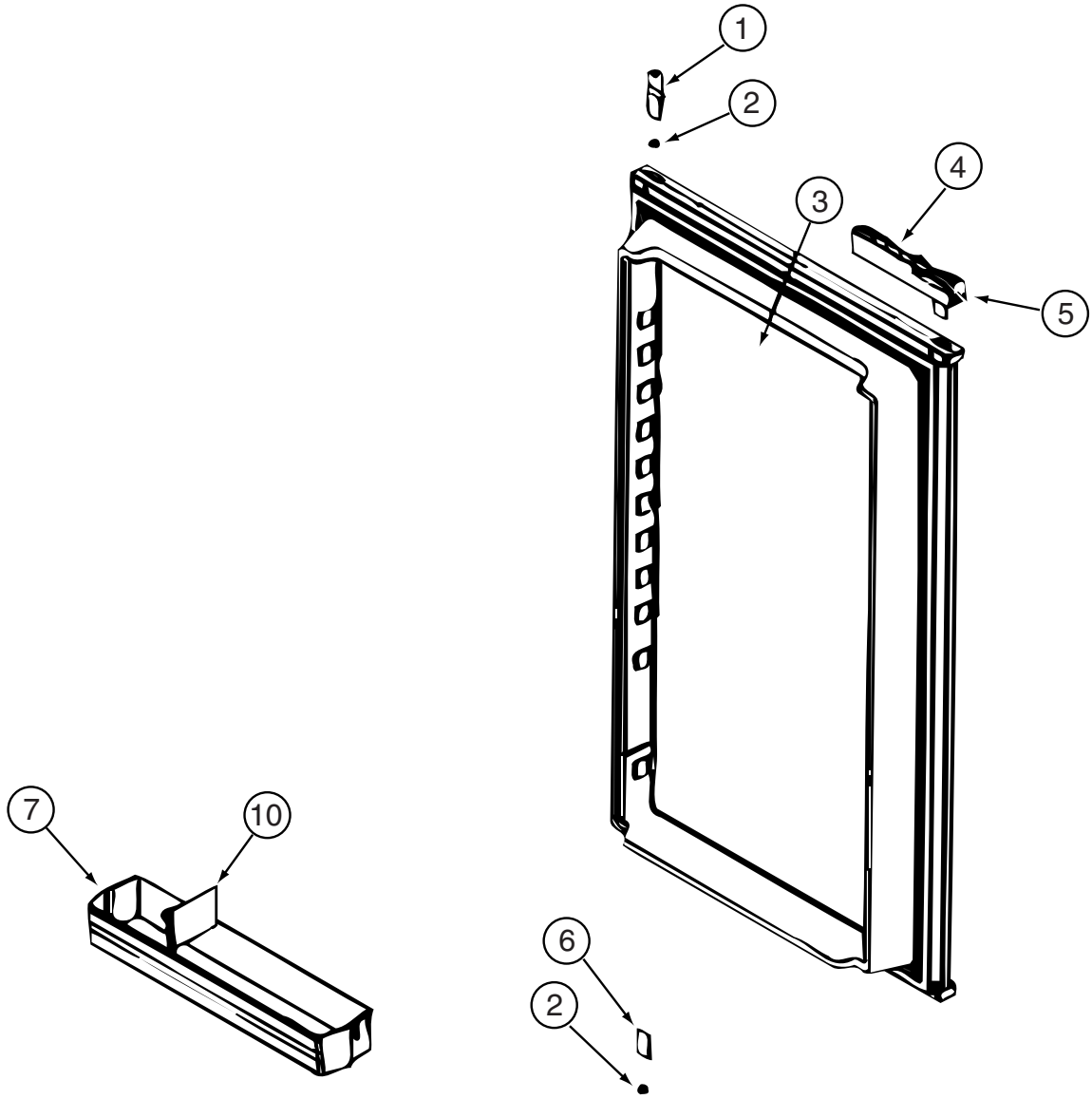

120075-16-01A, 120075-17-01A, 120075-18-01A, 120075-19-01A, 120075-21-01A, 120075-22-01A (CONTINUED)

KEY	PART NUMBER	U/M	DESCRIPTION	VENDOR NO.
1	120075-01-701	EA	HINGE-TOP RH/BOTTOM LH(DOOR)	618511
2	121568-03-701	EA	BUSHING - HINGE PIN/GRAY	619671
3	120075-16-701	EA	LINER/DOOR-LWR WRAPPED SS	623273
4	120075-12-700	EA	HANDLE(CONTOUR) TOP LH/BTM RH	621105
4	120075-12-701	EA	HANDLE(CONTOUR) TOP RH/BTM LH	621104
5	121568-03-705	EA	STORAGE LATCH - GRAY	619648
6	120075-01-705	EA	HINGE-TOP LH/BOTTOM RH(DOOR)	618510
7	120075-07-700	EA	DOOR BIN - SMALL/CLEAR	619006
7	120075-07-704	EA	DOOR BIN - LARGE/CLEAR	619005
10	120075-07-701	EA	DIVIDER/DOOR BIN CLEAR	619008

COPYRIGHT © 2006 WINNEBAGO INDUSTRIES INC.

CABINET & APPLIANCE GROUP (CONTINUED)

COMPONENT PARTS FOR CABINET & APPLIANCE LAYOUT (CONTINUED)

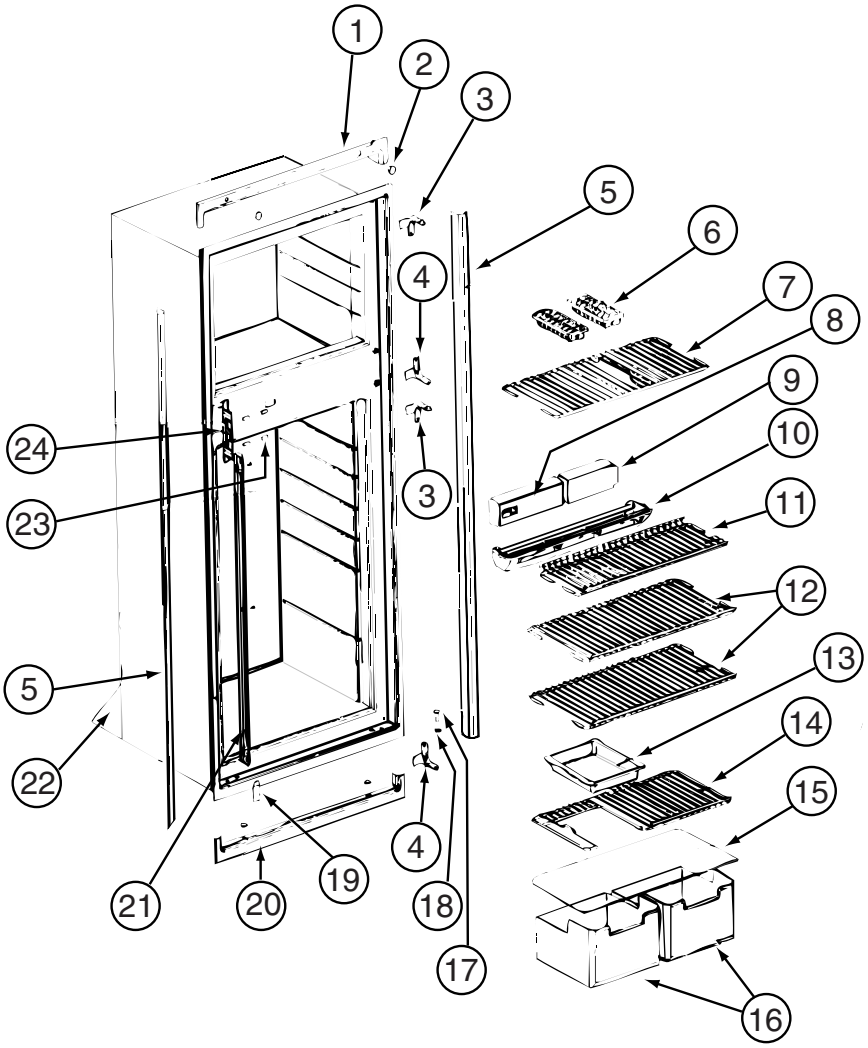

120075-16, 120075-17, 120075-18, 120075-19, 120075-20, 120075-21, 120075-22, 120075-23-01A (CONTINUED)

KEY	PART NUMBER	U/M	DESCRIPTION	VENDOR NO.
1	120075-20-700	EA	TRIM/TOP ASM W/INSERTS-BLACK	622319
2	120075-01-714	EA	PLUG-HOLE (BLACK)	618170
3	121568-03-710	EA	HINGE/CABINET-TOP/RH-LWR/LH	619335
4	121568-03-715	EA	HINGE/CABINET-TOP/LH-LWR/RH	619336
5	120075-07-705	EA	TRIM - SIDE - BLACK	622296
6	104137-06-724	EA	ICE TRAY	61630422
7	121568-03-712	EA	SHELF-WIRE FREEZER	620250
7	120075-07-706	EA	SHELF-WIRE F/ICEMAKER MODELS	620250
8	120075-07-707	EA	CONTROL BOX - BLACK	619665
9	121568-03-713	EA	FRONT BOX/DECORATIVE-BLACK	619282
10	120075-20-701	EA	TRAY/DRIP(INSIDE 1 PC)LOUVER	623250
11	120075-01-722	EA	SHELF-WIRE, SHORT	620269
12	120075-01-723	EA	SHELF-WIRE	620270
13	104137-06-718	EA	SHELF-TRAY, WHITE, W/CUTOUT	617756
14	120075-20-703	EA	SHELF - WIRE W/CUTOUT	620268
15	120075-01-725	EA	COVER-CRISPER	618158
16	120075-07-708	EA	CRISPER/ICE BIN	619007
17	120075-01-727	EA	PIN-HINGE	618145
18	121568-03-701	EA	BUSHING - HINGE PIN/GRAY	619671
19	121568-03-716	EA	COVER - HINGE HOLES	619301
20	120075-20-702	EA	TRIM PC(FOAM/TAPE)BTM BLACK	622323
21	120075-01-730	EA	RETAINER-SHELF(SER#926684 DN	618181
21	125242-02-720	EA	RETAINER/SHELF(SER#926685 UP	622033
23	121568-06-703	EA	HOLE PLUG - WHITE	620282
24	120075-01-732	EA	PLATE-STRIKE	618167
			CONTACT WINNEBAGO PART SALES FOR UNLISTED COMPONENT(S)	

COPYRIGHT © 2006 WINNEBAGO INDUSTRIES INC.

CABINET & APPLIANCE GROUP (CONTINUED)

COMPONENT PARTS FOR CABINET & APPLIANCE LAYOUT (CONTINUED)

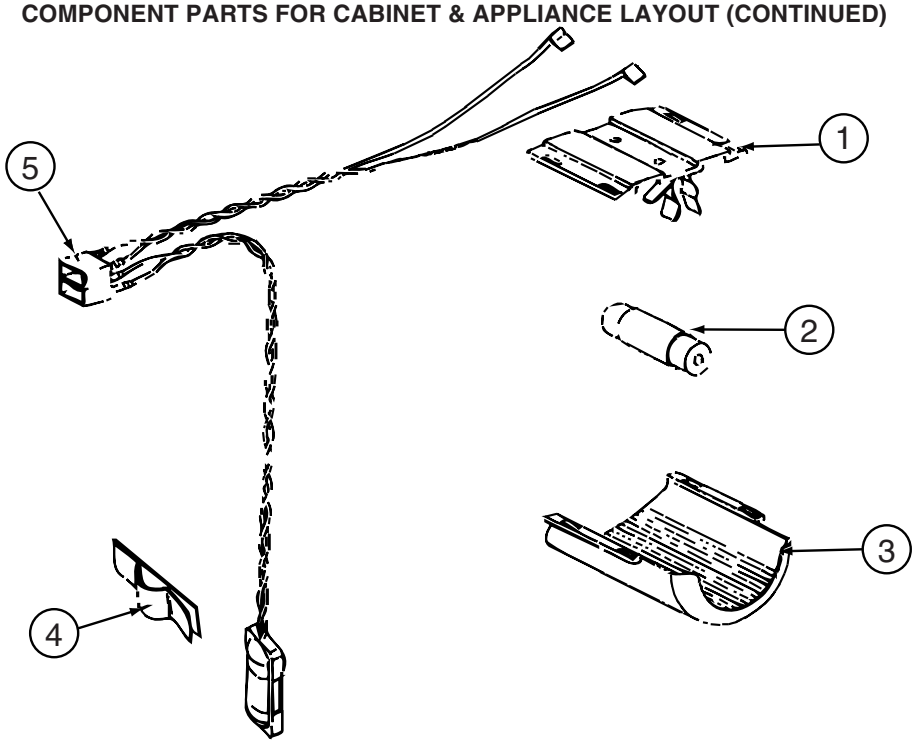

120075-16, 120075-17, 120075-18, 120075-19, 120075-20, 120075-21, 120075-22, 120075-23-01A (CONTINUED)

KEY	PART NUMBER	U/M	DESCRIPTION	VENDOR NO.
1	084880-03-705	EA	BRACKET-LIGHT-INTERIOR	61629722
2	084880-03-706	EA	BULB-LAMP	61628922
3	125242-02-708	EA	COVER/LAMP BRACKET	621827
4	084880-01-760	EA	CLIP (THERMISTER)	61689122
5	120075-01-735	EA	THERMISTER W/LAMP & V	618548

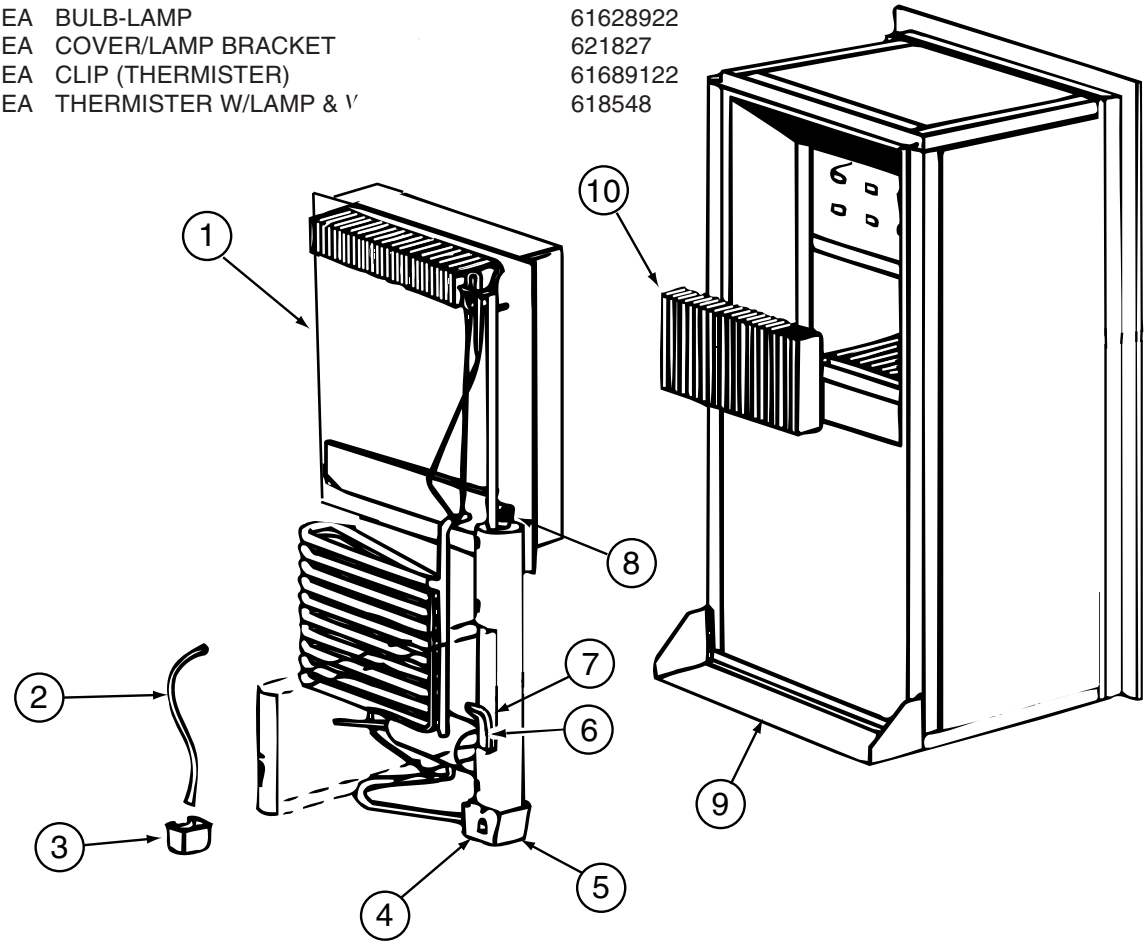

120075-16, 120075-17, 120075-18, 120075-19, 120075-20, 120075-21, 120075-22, 120075-23-01A (CONTINUED)

KEY	PART NUMBER	U/M	DESCRIPTION	VENDOR NO.
1	120075-01-736	EA	COOLING UNIT, SERVICE PACK	618542
6	121568-06-704	EA	HEATER-AC/300W/120VAC	621702

CONTACT WINNEBAGO PART SALES FOR UNLISTED COMPONENT(S)

COPYRIGHT © 2006 WINNEBAGO INDUSTRIES INC.

CABINET & APPLIANCE GROUP (CONTINUED)

COMPONENT PARTS FOR CABINET & APPLIANCE LAYOUT (CONTINUED)

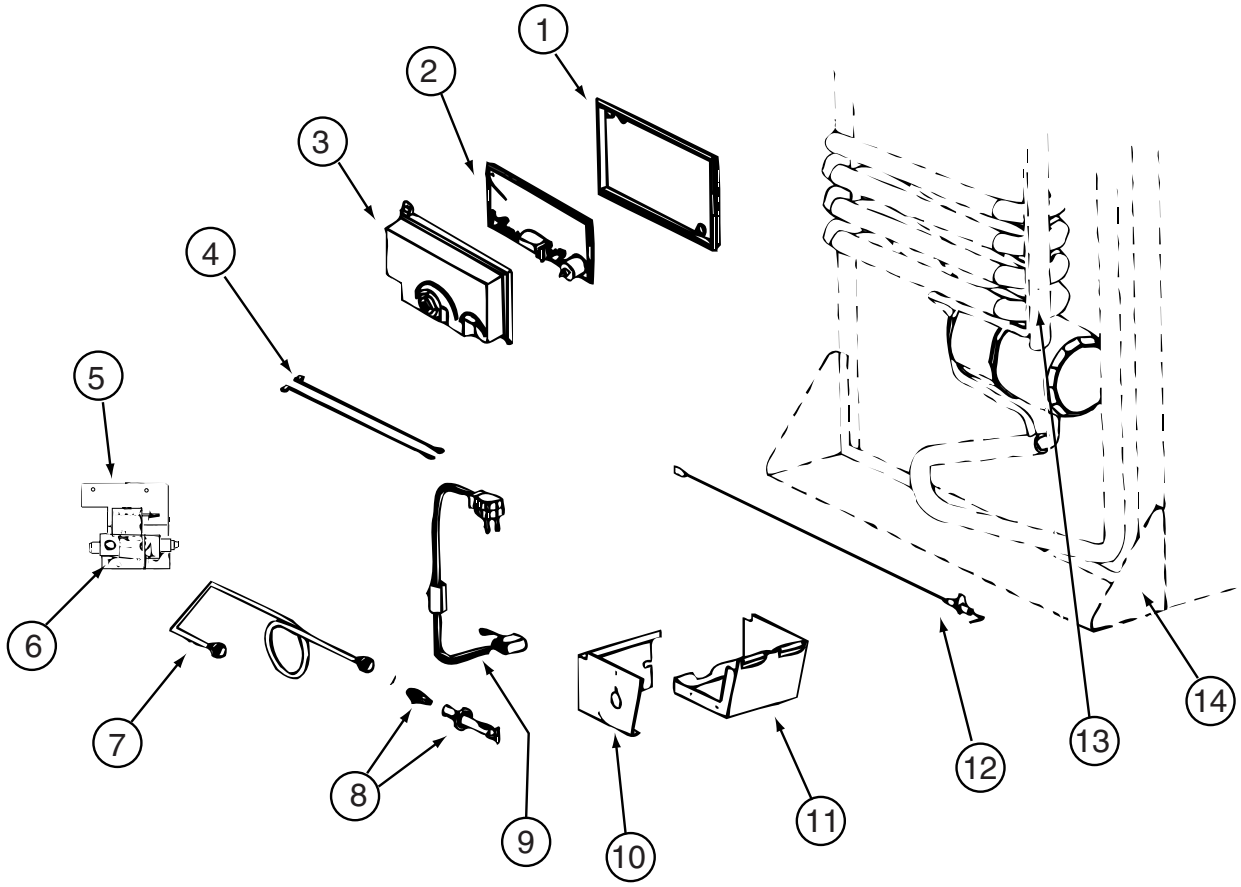

120075-16, 120075-17, 120075-18, 120075-19, 120075-20, 120075-21, 120075-22, 120075-23-01A (CONTINUED)

KEY	PART NUMBER	U/M	DESCRIPTION	VENDOR NO.
1	120075-01-740	EA	COVER-BASE, POWER BOARD	618186
2	120075-20-704	EA	KIT-POWER BOARD/EG2-2 WAY	621269001
3	120075-01-738	EA	COVER-POWER BOARD	618185
4	125242-02-709	EA	WIRE/WHITE/9"/GAS VALVE	621448
5	125242-02-710	EA	GAS VALVE/BRKT/WIRES COMB.	621334
6	121568-06-706	EA	GAS VALVE-COMBO/WRENCH FLAT	621329
7	120075-20-705	EA	TUBE/BURNER - N8/N6	620033
8	121568-06-708	EA	BURNER/ORFICE-ADAPTER KIT	621957
12	104137-06-715	EA	ELECTRODE-SPARK/SENSOR, SGL	61692222
			CONTACT WINNEBAGO PART SALES FOR UNLISTED COMPONENT(S)	

COPYRIGHT © 2006 WINNEBAGO INDUSTRIES INC.

CABINET & APPLIANCE GROUP (CONTINUED)

COMPONENT PARTS FOR CABINET & APPLIANCE LAYOUT (CONTINUED)

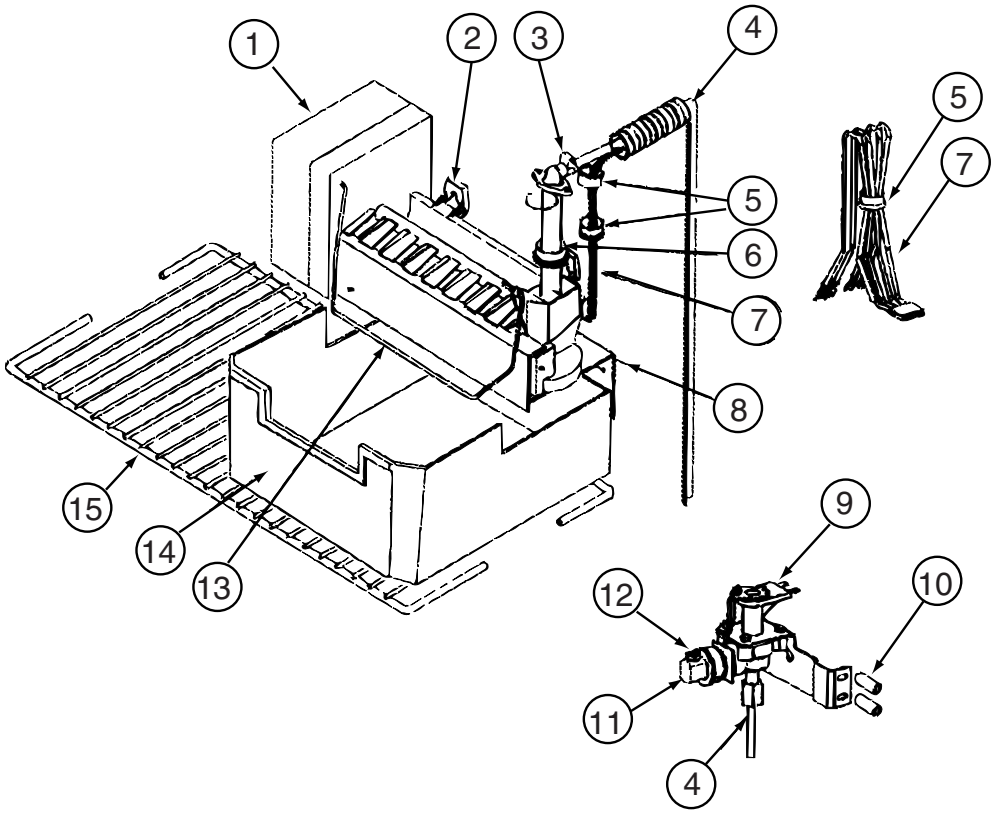

120075-16-01A, 120075-17-01A, 120075-18-01A, 120075-19-01A, 120075-20-01A, 120075-23-01A (CONTINUED)

KEY	PART NUMBER	U/M	DESCRIPTION	VENDOR NO.
2	094039-07-706	EA	ICE MAKER W/O PLATES	61656522
9	120075-03-701	EA	VALVE ASM., WATER, W/BRACKET	618253
13	120075-03-703	EA	ARM-SHUT OFF	61656922
14	120075-07-708	EA	CRISPER/ICE BIN	619007
15	120075-07-706	EA	SHELF-WIRE F/ICEMAKER MODELS	620249
			CONTACT WINNEBAGO PART SALES FOR UNLISTED COMPONENT(S)	

COPYRIGHT © 2006 WINNEBAGO INDUSTRIES INC.

CABINET & APPLIANCE GROUP (CONTINUED)

COMPONENT PARTS FOR CABINET & APPLIANCE LAYOUT (CONTINUED)

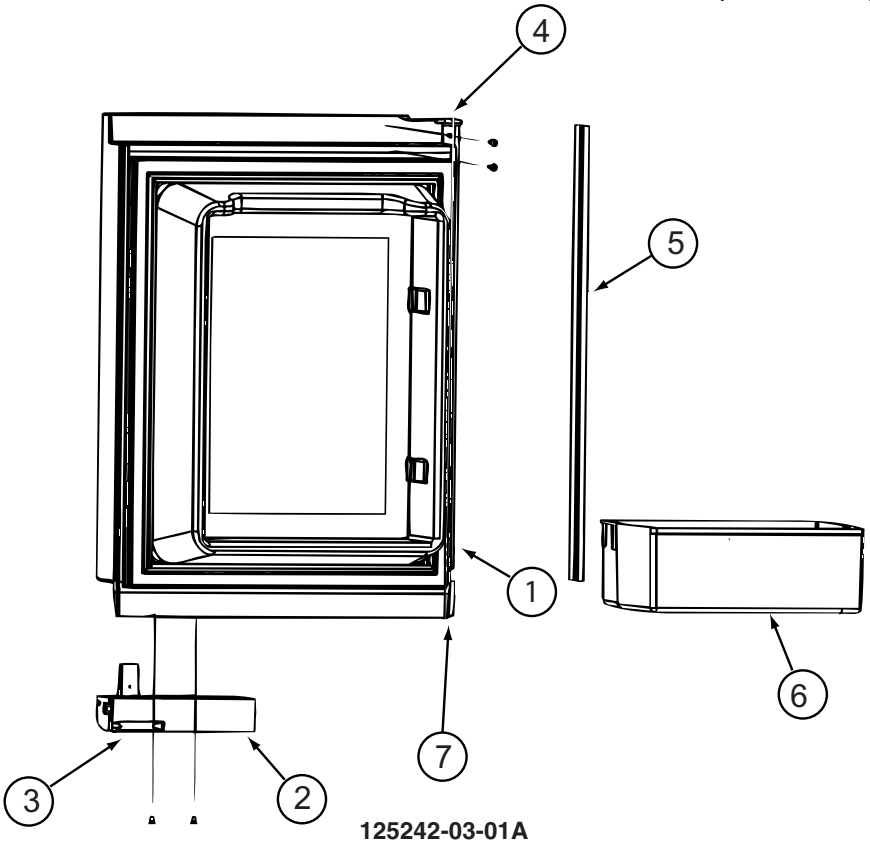

125242-03-01A

KEY	PART NUMBER	U/M	DESCRIPTION	VENDOR NO.
1	125242-03-708	EA	LINER-FOAMED/UPPER LH/SS	623811
2	125242-02-700	EA	HANDLE(CONTOUR)TOP LH BTM RH	621107
3	125242-02-722	EA	LATCH-STORAGE DR/BLK POINTED	619374
4	125242-02-724	EA	HINGE - DOOR	618792
5	125242-02-723	EA	RETAINER/PANEL-UPPER DOOR	623166
6	125242-03-704	EA	BIN - DOOR SHELF	622831
7	125242-01-704	EA	BUSHING-HINGE MIDDLE	618746
	125242-03-700	EA	DOOR-COMP UPR/LH(SS WRAPPED)	623924

COPYRIGHT © 2006 WINNEBAGO INDUSTRIES INC.

CABINET & APPLIANCE GROUP (CONTINUED)

COMPONENT PARTS FOR CABINET & APPLIANCE LAYOUT (CONTINUED)

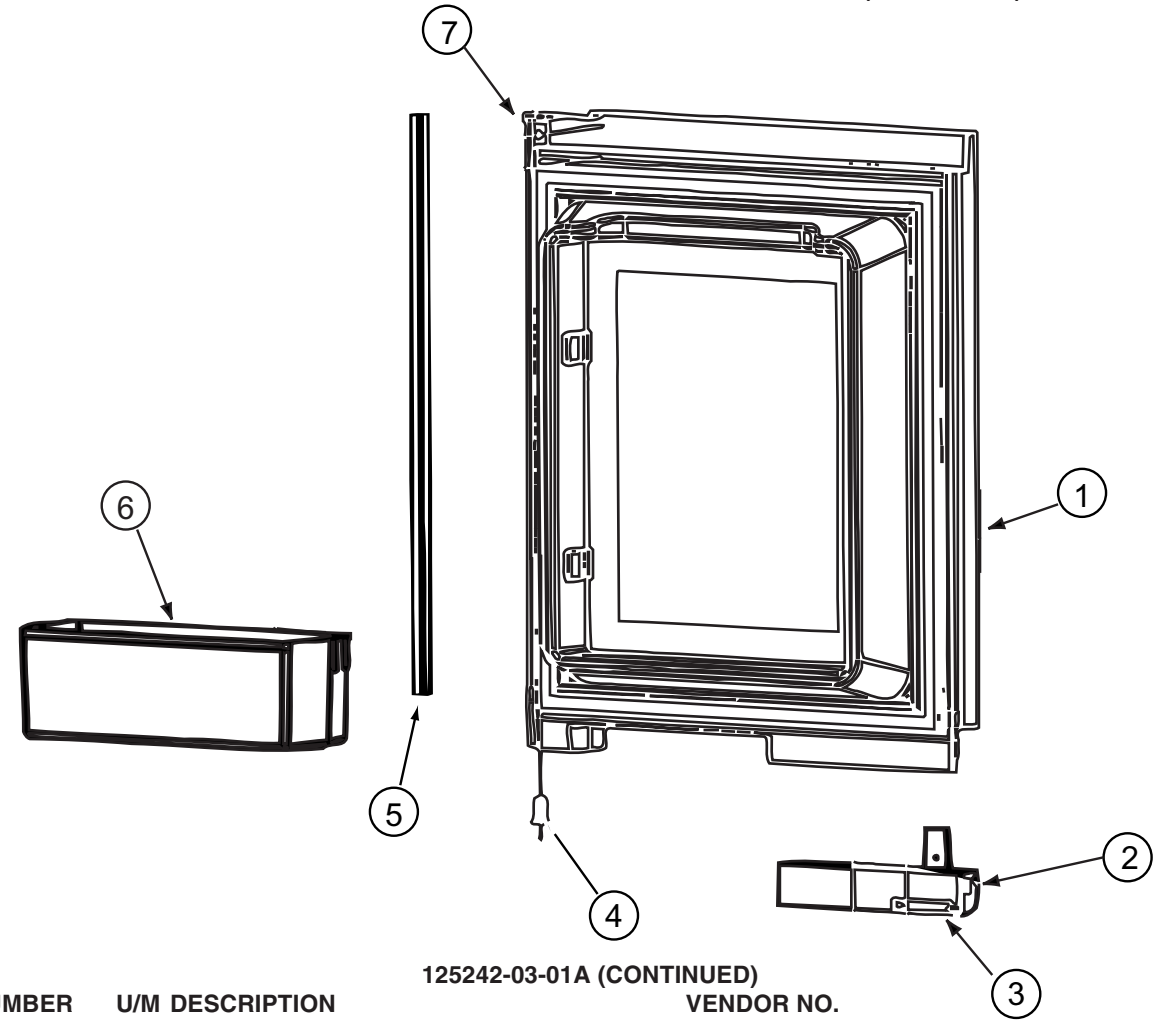

125242-03-01A (CONTINUED)

KEY	PART NUMBER	U/M	DESCRIPTION	VENDOR NO.
1	125242-03-707	EA	LINER-FOAMED/UPPER RH/SS	623812
2	125242-02-701	EA	HANDLE(CONTOUR)TOP RH LWR LH	621106
3	125242-02-722	EA	LATCH-STORAGE DR/BLK POINTED	619374
4	125242-01-704	EA	BUSHING-HINGE MIDDLE	618746
5	125242-02-723	EA	RETAINER/PANEL-UPPER DOOR	623166
6	125242-03-704	EA	BIN - DOOR SHELF	622831
7	125242-02-724	EA	HINGE - DOOR	618792
	125242-03-701	EA	DOOR-COMP UPR/RH(SS WRAPPED)	623925

COPYRIGHT © 2006 WINNEBAGO INDUSTRIES INC.

CABINET & APPLIANCE GROUP (CONTINUED)

COMPONENT PARTS FOR CABINET & APPLIANCE LAYOUT (CONTINUED)

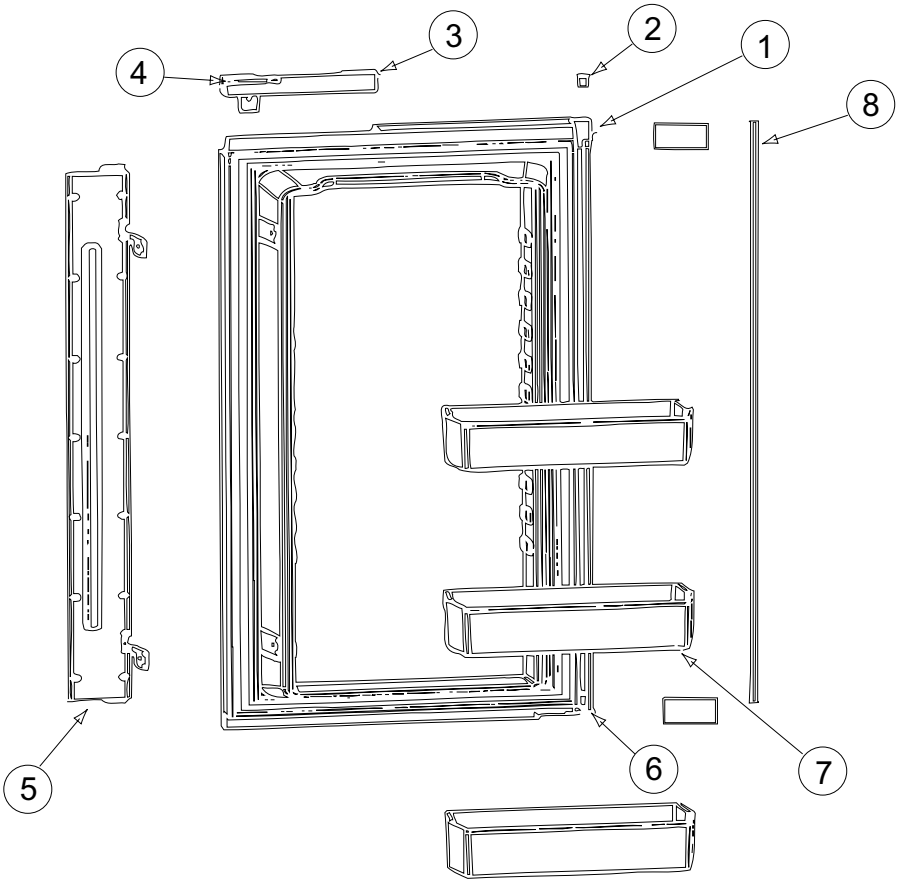

125242-03-01A (CONTINUED)

KEY	PART NUMBER	U/M	DESCRIPTION	VENDOR NO.
1	125242-03-710	EA	LINER-FOAMED/LOWER LH/SS	623813
2	125242-01-704	EA	BUSHING-HINGE MIDDLE	618746
3	125242-02-701	EA	HANDLE(CONTOUR)TOP RH LWR LH	621106
4	125242-02-722	EA	LATCH-STORAGE DR/BLK POINTED	619374
5	125242-03-705	EA	FLAPPER ASM.-DBL POLE BLACK	623887
6	125242-02-724	EA	HINGE - DOOR	618792
7	125242-03-704	EA	BIN - DOOR SHELF	622831
8	125242-02-728	EA	RETAINER/PANEL - LOWER	623167
	125242-03-702	EA	DOOR-COMP LWR/LH(SS WRAPPED)	623926
	125242-03-706	EA	PROBE - CONTACT/LARGE	620689

COPYRIGHT © 2006 WINNEBAGO INDUSTRIES INC.

CABINET & APPLIANCE GROUP (CONTINUED)

COMPONENT PARTS FOR CABINET & APPLIANCE LAYOUT (CONTINUED)

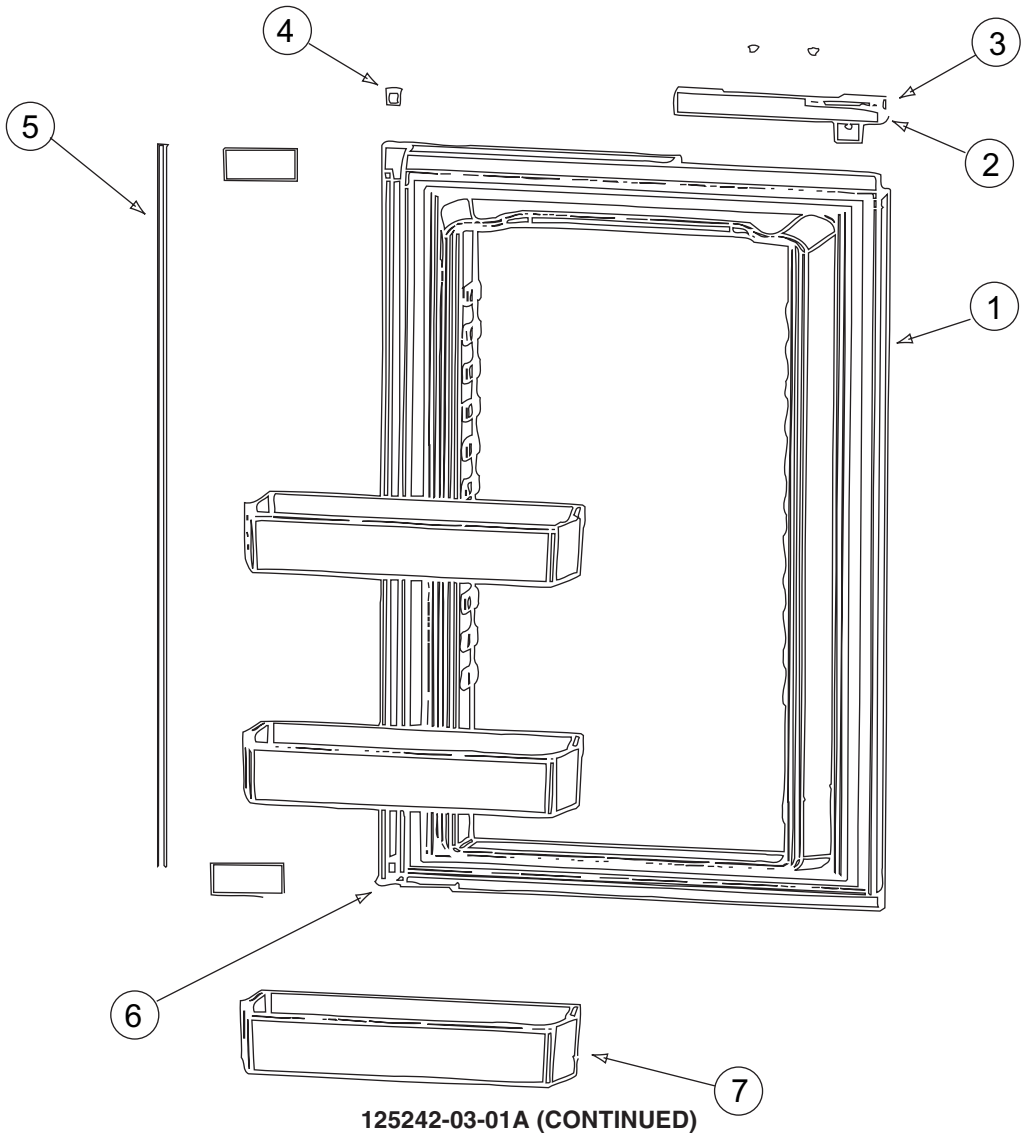

125242-03-01A (CONTINUED)

KEY	PART NUMBER	U/M	DESCRIPTION	VENDOR NO.
1	125242-03-709	EA	LINER-FOAMED/LOWER RH/SS	623814
2	125242-02-700	EA	HANDLE(CONTOUR)TOP LH BTM RH	621107
3	125242-02-722	EA	LATCH-STORAGE DR/BLK POINTED	619374
4	125242-01-704	EA	BUSHING-HINGE MIDDLE	618746
5	125242-02-728	EA	RETAINER/PANEL - LOWER	623167
6	125242-02-724	EA	HINGE - DOOR	618792
7	125242-03-704	EA	BIN - DOOR SHELF	622831
	125242-03-703	EA	DOOR-COMP LWR/RH(SS WRAPPED)	623927

COPYRIGHT © 2006 WINNEBAGO INDUSTRIES INC.

CABINET & APPLIANCE GROUP (CONTINUED)

COMPONENT PARTS FOR CABINET & APPLIANCE LAYOUT (CONTINUED)

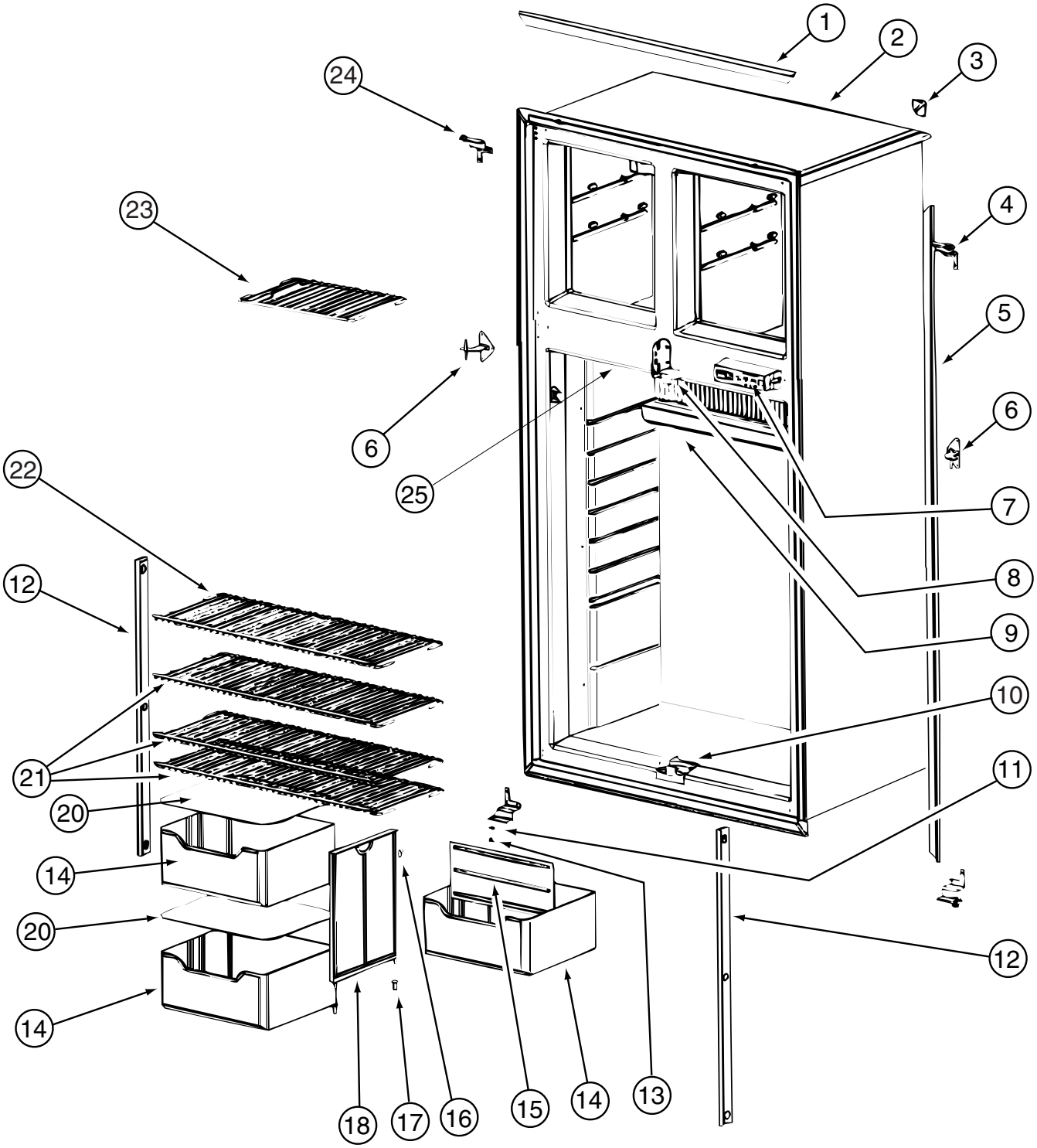

125242-03-01A (CONTINUED)

COPYRIGHT © 2006 WINNEBAGO INDUSTRIES INC.

CABINET & APPLIANCE GROUP (CONTINUED)

COMPONENT PARTS FOR CABINET & APPLIANCE LAYOUT (CONTINUED)

125242-03-01A (CONTINUED)

KEY	PART NUMBER	U/M	DESCRIPTION	VENDOR NO.
1	125242-02-730	EA	TRIM - TOP/BOTTOM - SCREW ON	623255
4	125242-03-711	EA	HINGE-UPR RH/LWR LH WRAP/DRS	623824
5	125242-01-766	EA	TRIM-LT/RT HAND-SCREW ON	623254
6	125242-01-713	EA	HINGE-MIDDLE (PAINTED)	618794
7	125242-02-704	EA	DISPLAY ASM (SER#832172) UP	621188
7	125242-03-712	EA	CONTROL-OPT/GRAY-SN832172 UP	624868
8	125242-01-721	EA	STRIKE PLATE	618835
9	125242-01-712	EA	DRIP TRAY	618774
10	125242-03-713	EA	GUIDE BLOCK/FLAPPER/BTM BLK	624140
11	120075-01-708	EA	BUSHING-DOOR HINGE	618144
12	120075-01-730	EA	RETAINER-SHELF(SER#926684 DN	618181
12	125242-02-720	EA	RETAINER/SHEF(SER#926685 UP	622033
13	125242-03-715	EA	HINGE PIN/UPR-WRAPPED DOORS	623899
14	125242-01-734	EA	CRISPER/BOTTLE BIN	618878
15	125242-01-733	EA	DIVIDER-BOTTLE CRISPER	618877
16	125242-01-750	EA	CLIP	61409622
18	125242-01-749	EA	SUPPORT - WALL	618840
20	125242-01-706	EA	COVER-CRISPER	618757
21	125242-01-726	EA	SHELF-WIRE (LONG)	618848
22	125242-01-727	EA	SHELF-WIRE (SHORT)	618849
23	125242-01-725	EA	SHELF-FREEZER (WIRE)	618847
24	125242-03-716	EA	HINGE-TOP LH/WRAPPED DOORS	623823
25	125242-01-735	EA	SWITCH - DOOR LIGHT	618884
	120075-01-714	EA	PLUG-HOLE (BLACK)	618170
	125242-02-741	EA	STRIP-FREEZER-BLACK #1291391 & UP	625210
	125242-03-714	EA	GUIDE-FLAPPERTOP/BLACK	624141
			CONTACT WINNEBAGO PART SALES FOR UNLISTED COMPONENT(S)	

COPYRIGHT © 2006 WINNEBAGO INDUSTRIES INC.

CABINET & APPLIANCE GROUP (CONTINUED)

COMPONENT PARTS FOR CABINET & APPLIANCE LAYOUT (CONTINUED)

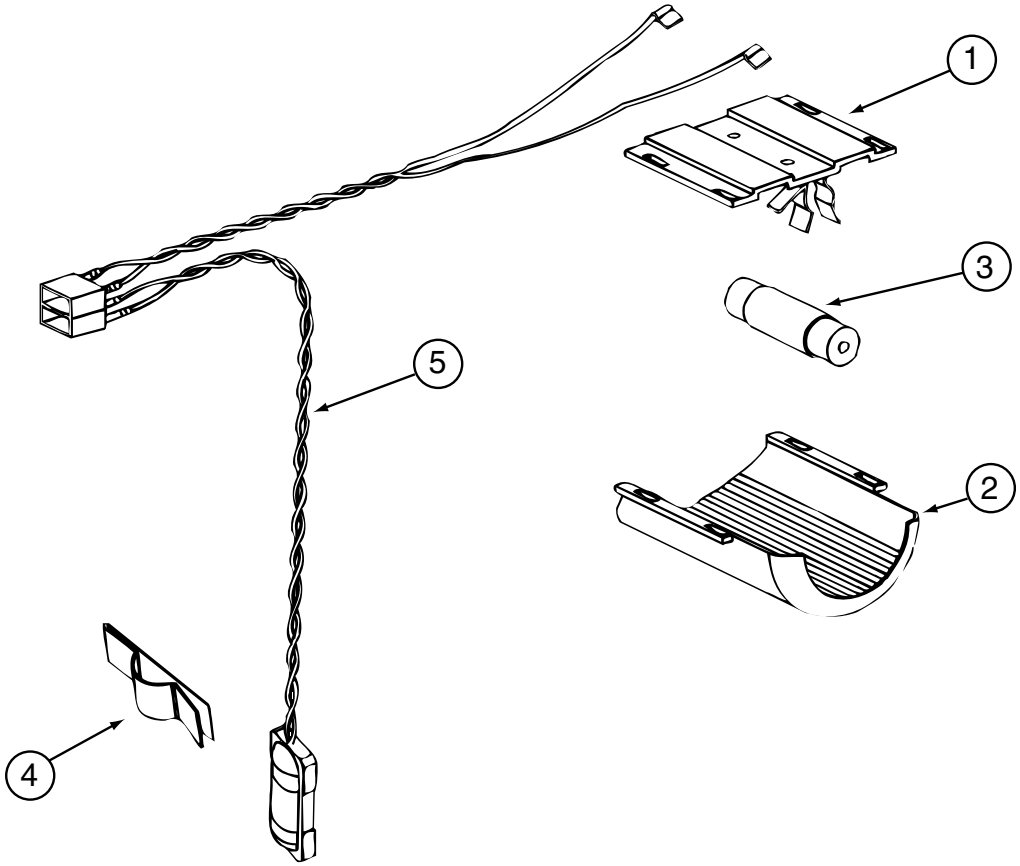

125242-02-01A & 125242-03-01A (CONTINUED)

KEY	PART NUMBER	U/M	DESCRIPTION	VENDOR NO.
1	084880-03-705	EA	BRACKET-LIGHT-INTERIOR	61629722
2	120075-01-734	EA	COVER-LENS	618190
3	084880-03-706	EA	BULB-LAMP	61628922
4	084880-01-760	EA	CLIP (THERMISTER)	61689122
5	120075-01-735	EA	THERMISTER W/LAMP & WIRE/ASM	618548
	125242-02-706	EA	LAMP/WIRE ASM/SER#849677 UP	620871
	125242-02-707	EA	LAMP/WIRE ASM SER#849677 DWN	621742

COPYRIGHT © 2006 WINNEBAGO INDUSTRIES INC.

CABINET & APPLIANCE GROUP (CONTINUED)

COMPONENT PARTS FOR CABINET & APPLIANCE LAYOUT (CONTINUED)

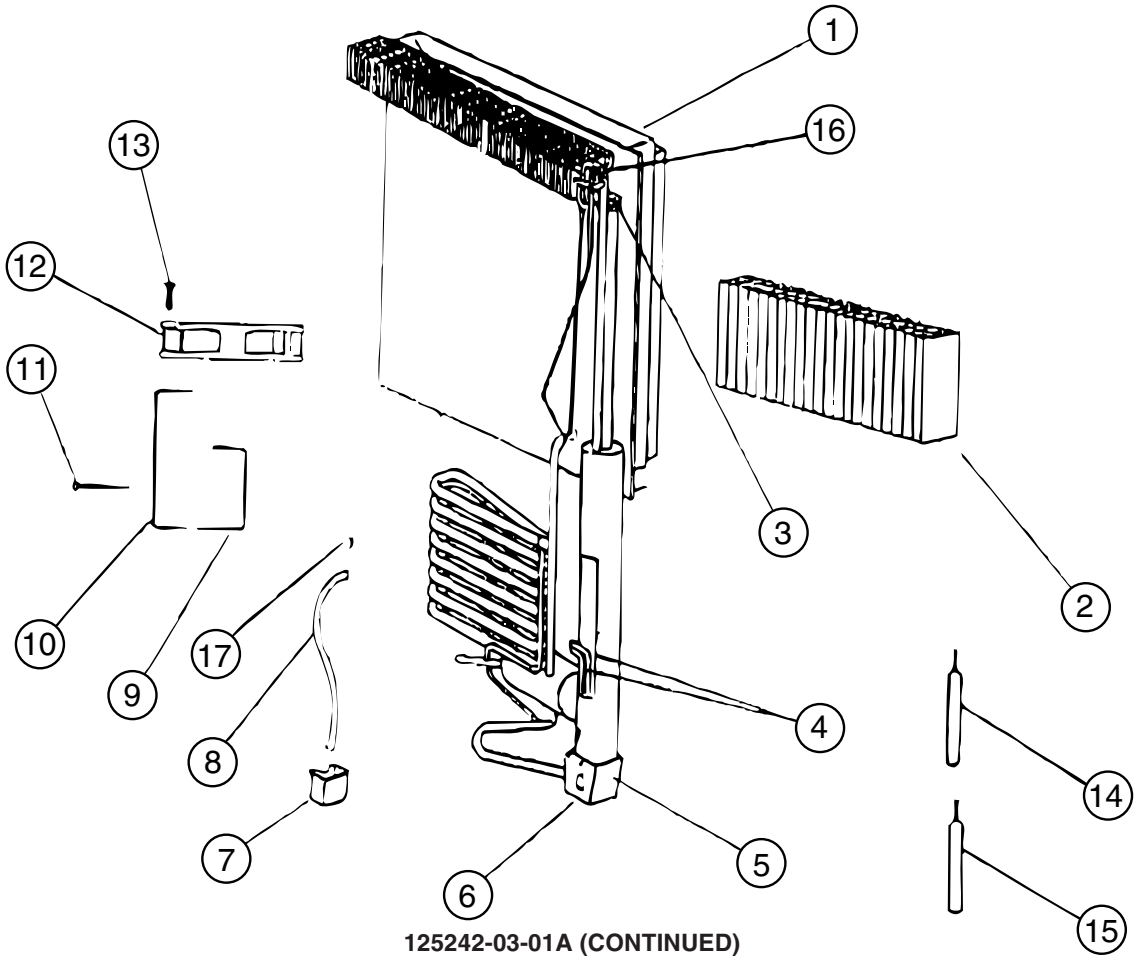

125242-03-01A (CONTINUED)

KEY	PART NUMBER	U/M	DESCRIPTION	VENDOR NO.
1	125242-01-746	EA	COOLING UNIT - 1200	618964
4	125242-01-732	EA	HEATER AC - 225W/110VAC	618872
5	125242-01-739	EA	BASE-BURNER BOX	618902
6	125242-01-740	EA	COVER-BURNER BOX	618910
9	125242-01-730	EA	BRACKET-DC FAN	618857
10	125242-01-741	EA	SUPPORT-DC FAN	618912
12	125242-01-729	EA	FAN-EXTERNAL DC	618856
16	113737-01-754	EA	THERMOSTAT (FAN 12V DC)	618093
	125242-01-742	EA	WIRE ASM.-BAFFLE 55.15”	618915
			CONTACT WINNEBAGO PART SALES FOR UNLISTED COMPONENT(S)	

COPYRIGHT © 2006 WINNEBAGO INDUSTRIES INC.

CABINET & APPLIANCE GROUP (CONTINUED)

COMPONENT PARTS FOR CABINET & APPLIANCE LAYOUT (CONTINUED)

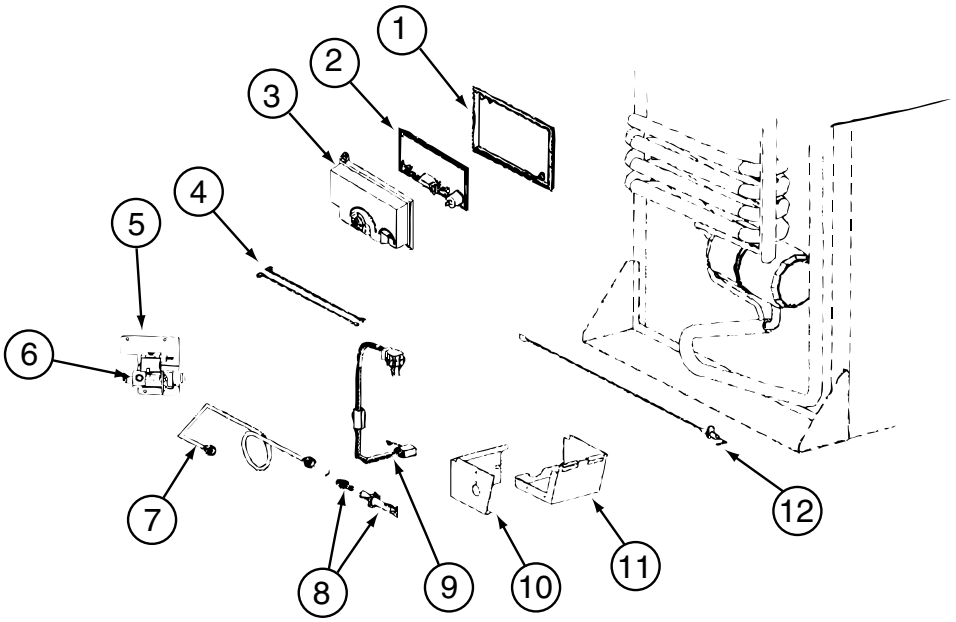

125242-03-01A (CONTINUED)

KEY	PART NUMBER	U/M	DESCRIPTION	VENDOR NO.
1	120075-01-740	EA	COVER-BASE, POWER BOARD	618186
2	125242-01-720	EA	POWER BOARD (SER#832170 DN)	619819
2	125242-02-731	EA	POWER BD KIT SER#832172 UP	621271001
3	120075-01-738	EA	COVER-POWER BOARD	618185
4	125242-02-709	EA	WIRE/WHITE/9"/GAS VALVE	621448
6	121568-06-706	EA	GAS VALVE-COMBO/WRENCH FLAT	621329
7	125242-02-711	EA	BURNER TUBE	620034
8	125242-02-712	EA	BURNER ORFICE ADAPTER ASSY	621959
10	125242-01-740	EA	COVER-BURNER BOX	618910
11	125242-01-739	EA	BASE-BURNER BOX	618902
12	104137-06-715	EA	ELECTRODE-SPARK/SENSOR, SGL	61692222
	121568-01-713	EA	KIT-GAS VALVE/BURNER TUBE	621444
			CONTACT WINNEBAGO PART SALES FOR UNLISTED COMPONENT(S)	

COPYRIGHT © 2006 WINNEBAGO INDUSTRIES INC.

CABINET & APPLIANCE GROUP (CONTINUED)

COMPONENT PARTS FOR CABINET & APPLIANCE LAYOUT (CONTINUED)

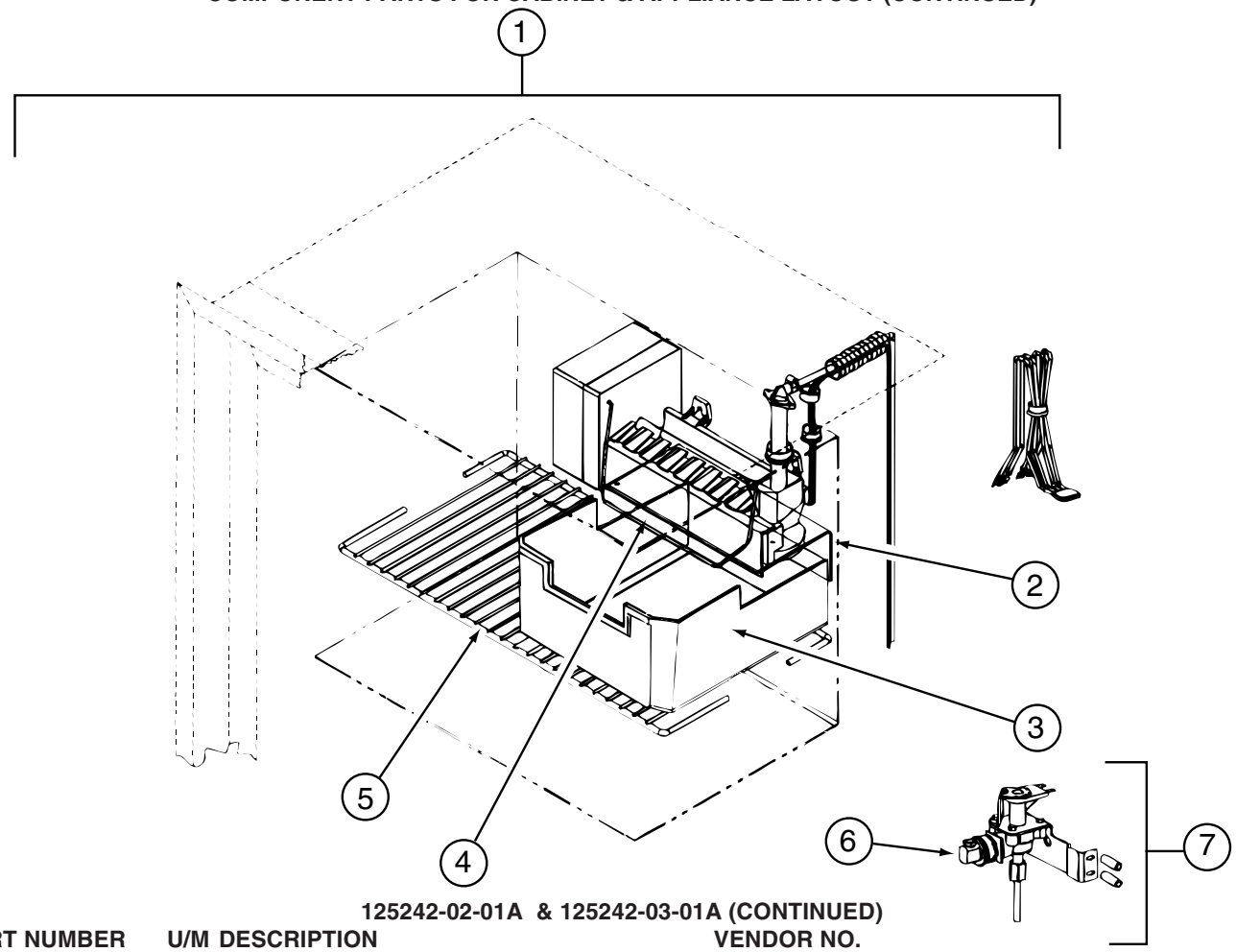

125242-02-01A & 125242-03-01A (CONTINUED)

KEY	PART NUMBER	U/M	DESCRIPTION	VENDOR NO.
1	094039-07-706	EA	ICE MAKER W/O PLATES	61656522
2	125242-01-737	EA	BRACKET-MOUNTING (ICE MAKER)	618894/620890
3	125242-01-716	EA	ICE BIN	618803
4	120075-03-703	EA	ARM-SHUT OFF	61656922
5	125242-01-725	EA	SHELF-FREEZER (WIRE)	618847
6	120075-03-702	EA	NUT/COMPRESSION - FITTING	61678722
7	120075-03-701	EA	VALVE ASM., WATER, W/BRACKET	618253
	094039-07-707	EA	GARDEN HOSE ADAP W/BRASS NUT	61679622
	094039-07-708	EA	NUT - COMPRESSION	622991

126022-01-01A, 126022-02-01A, 126022-03-01A

KEY	PART NUMBER	U/M	DESCRIPTION	VENDOR NO.
	114030-01-707	EA	PLUG BUTTON BLACK	74002628
	126022-01-700	EA	BUMPER - RANGE BIFOLD COVER MAGIC	8003P007-60
	126022-01-701	EA	HINGE-RANGE BIFOLD COVER-22" MAGIC	3418F067-34

COPYRIGHT © 2006 WINNEBAGO INDUSTRIES INC.

CABINET & APPLIANCE GROUP (CONTINUED)

COMPONENT PARTS FOR CABINET & APPLIANCE LAYOUT (CONTINUED)

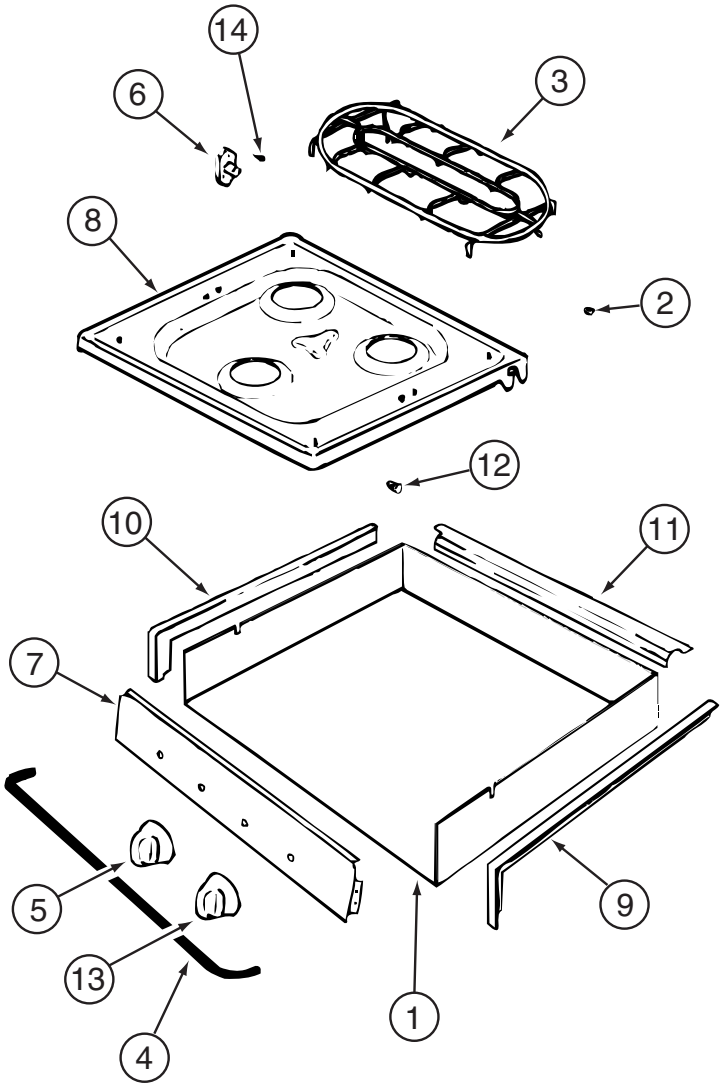

135065-03-01A, 135065-03-03A, 135065-04-01A

KEY	PART NUMBER	U/M	DESCRIPTION	VENDOR NO.
2	102020-01-709	EA	BUMPER-GRATE	8007-P020-60
3	135065-03-703	EA	GRATE - BLACK(SEALED BURNER)	74007304
4	114030-02-700	EA	GUARD/FABRIC - TOWEL BAR	3609F006-70
5	128728-01-701	EA	KNOB - BURNER - REAR	74003941
5	128728-01-702	EA	KNOB - BURNER - FRONT	74003942
6	128728-01-703	EA	PIN/T-NUT F/HINGE	7103P109-60
7	135065-03-704	EA	PANEL - MANIFOLD (BLACK)	74007330
8	128728-01-705	EA	TOP - MAIN - BLACK	74003928
8	135065-03-715	EA	TOP - MAIN - STAINLESS STEEL	74007299
9	114030-01-704	EA	TRIM - RIGHT/BLACK TEXTURED	74002839
10	114030-01-705	EA	TRIM - LEFT/BLACK TEXTURED	74002840
11	114030-01-706	EA	TRIM - REAR/BLACK TEXTURED	74002841
12	102020-01-724	EA	BUMPER-MAIN TOP	8003P008-60
13	128728-01-707	EA	KNOB - IGNITOR	74003944
			CONTACT WINNEBAGO PART SALES FOR UNLISTED COMPONENT(S)	

COPYRIGHT © 2006 WINNEBAGO INDUSTRIES INC.

CABINET & APPLIANCE GROUP (CONTINUED)

COMPONENT PARTS FOR CABINET & APPLIANCE LAYOUT (CONTINUED)

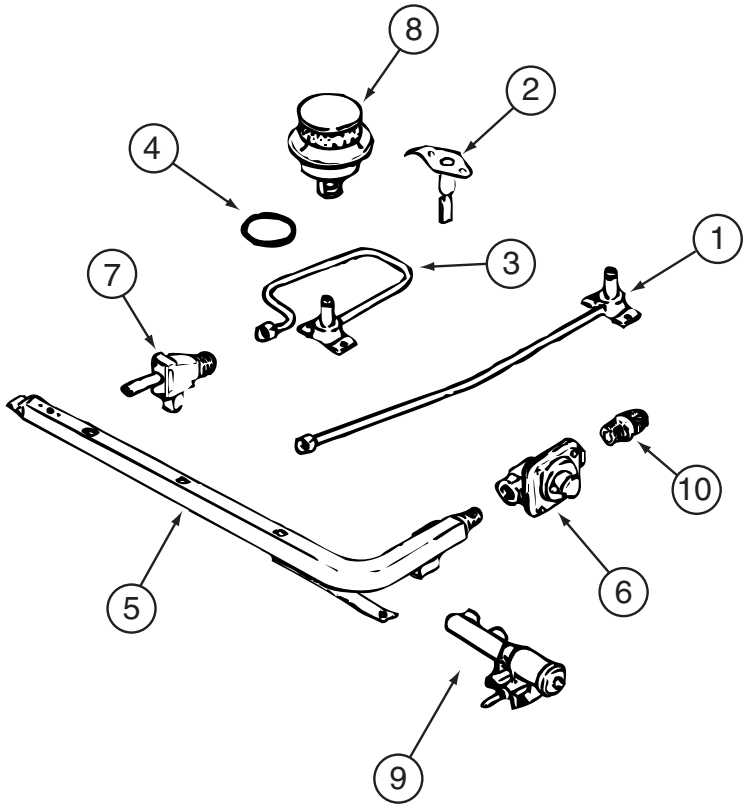

135065-03-01A, 135065-03-03A, 135065-04-01A (CONTINUED)

KEY	PART NUMBER	U/M	DESCRIPTION	VENDOR NO.
1	128728-01-708	EA	FITTING W/ORFICE/TUBE - REAR	74003931
2	135065-01-701	EA	IGNITOR/PORCELAIN-TOP BURNER	74004053
3	128728-01-710	EA	FITTING W/ORFICE/TUBE - FRT	74003930
4	135065-03-700	EA	FITTING - HALF UNION	74004234
5	135065-01-702	EA	PIPE/MANIFOLD	74004642
6	126023-02-703	EA	REGULATOR - PRESSURE	74004235
7	135065-01-703	EA	VALVE/BURNER - REAR	74004643
7	135065-01-704	EA	VALVE/BURNER-FRT-HI	74004644
7	135065-03-701	EA	SCREW - VALVE	71003231
8	135065-03-702	EA	SEALED BURNER ASM.(BLACK) RV	74003967
9	128728-01-716	EA	BURNER - IGNITOR	74003946
9	128728-01-717	EA	WIRES - IGNITOR	74003947

COPYRIGHT © 2006 WINNEBAGO INDUSTRIES INC.

CABINET & APPLIANCE GROUP (CONTINUED)

COMPONENT PARTS FOR CABINET & APPLIANCE LAYOUT (CONTINUED)

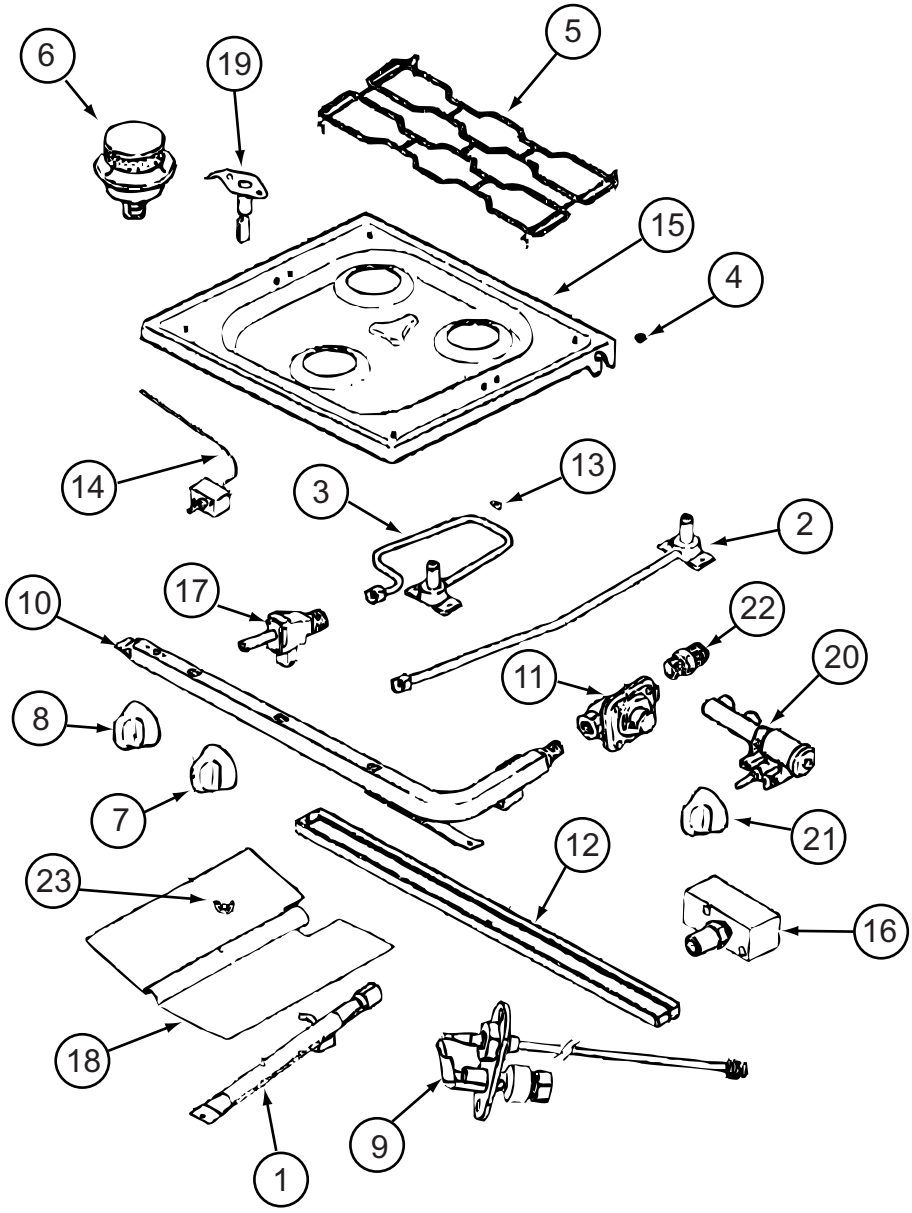

151277-03-01A, 151279-01-01A, 151279-02-01A/02A, 151279-03-01A

COPYRIGHT © 2006 WINNEBAGO INDUSTRIES INC.

CABINET & APPLIANCE GROUP (CONTINUED)

COMPONENT PARTS FOR CABINET & APPLIANCE LAYOUT (CONTINUED)

151277-03-01A, 151279-01-01A, 151279-02-01A/02A, 151279-03-01A (CONTINUED)

KEY	PART NUMBER	U/M	DESCRIPTION	VENDOR NO.
1	151279-02-700	EA	BURNER - OVEN - W/SHUTTER	74009853
2	128728-01-708	EA	FITTING W/ORFICE/TUBE - REAR	74003931
3	128728-01-710	EA	FITTING W/ORFICE/TUBE - FRT	74003930
4	102020-01-709	EA	BUMPER-GRATE	8007P020-60
5	135065-03-703	EA	GRATE - BLACK(SEALED BURNER)	74007304
6	135065-03-702	EA	SEALED BURNER ASM.(BLACK) RV	74003967
7	128728-01-701	EA	KNOB - BURNER - REAR	74003941 (1 PER)
7	128728-01-702	EA	KNOB - BURNER - FRONT	74003942 (2 PER)
8	151279-02-701	EA	KNOB - THERMOSTAT - BLACK	74009858
9	112881-04-706	EA	PILOT-OVEN (151279-01-01A ONLY)	74006334
9	151279-01-700	EA	PILOT-BURNER- 16” (151279-01-01A ONLY)	74009852
9	151279-02-705	EA	PILOT - OVEN - 22” SERIES	74010544
10	151279-02-702	EA	PIPE - MANIFOLD	74009856
11	126023-02-703	EA	REGULATOR - PRESSURE	74004235
11	112881-03-701	EA	REGULATOR KIT W/FITTINGS	12001285
13	102020-01-724	EA	BUMPER-MAIN TOP	8003P008-60
14	151279-02-703	EA	THERMOSTAT	74009855
15	128728-01-705	EA	TOP - MAIN - BLACK	74003928
15	135065-03-715	EA	TOP - MAIN - STAINLESS STEEL	74007299
16	151279-02-704	EA	ELBOW BLOCK ASM (VALVE-OVEN)	74009864
17	135065-01-703	EA	VALVE/BURNER - REAR	74004643
17	135065-01-704	EA	VALVE/BURNER-FRT-HI	74004644
18	135656-01-701	EA	MIXER/AIR	3411F003-34
19	135065-01-701	EA	IGNITOR/PORCELAIN-TOP BURNER	74004053
20	128728-01-716	EA	IGNITOR - F/BURNERS	74003946
20	128728-01-717	EA	WIRES - IGNITOR	74003947
21	128728-01-707	EA	KNOB - IGNITOR	74003944
22	135065-03-700	EA	FITTING - HALF UNION	74004234

CONTACT WINNEBAGO PART SALES FOR UNLISTED COMPONENT(S)

COPYRIGHT © 2006 WINNEBAGO INDUSTRIES INC.

CABINET & APPLIANCE GROUP (CONTINUED)

COMPONENT PARTS FOR CABINET & APPLIANCE LAYOUT (CONTINUED)

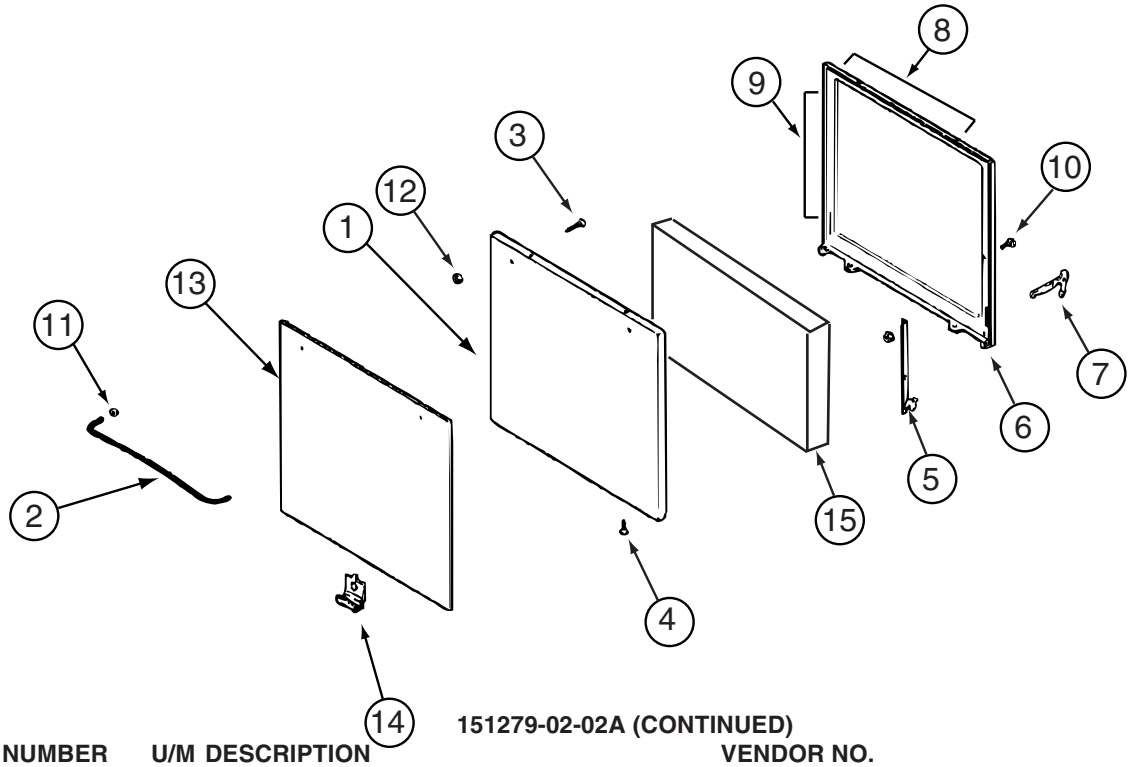

151279-02-02A (CONTINUED)

KEY	PART NUMBER	U/M	DESCRIPTION	VENDOR NO.
1	126023-01-712	EA	PANEL - DOOR (BLACK)	74001190
2	128727-01-701	EA	HANDLE - OVEN DOOR	74003929
8	126023-01-732	EA	SEAL/OVEN DR TOP	7212P014-60
9	135066-03-714	EA	SEAL - OVEN DOOR SIDES	7212P039-60
13	135066-03-702	EA	PANEL-DOOR - STAINLESS STEEL	74007313
			CONTACT WINNEBAGO PART SALES FOR UNLISTED COMPONENT(S)	

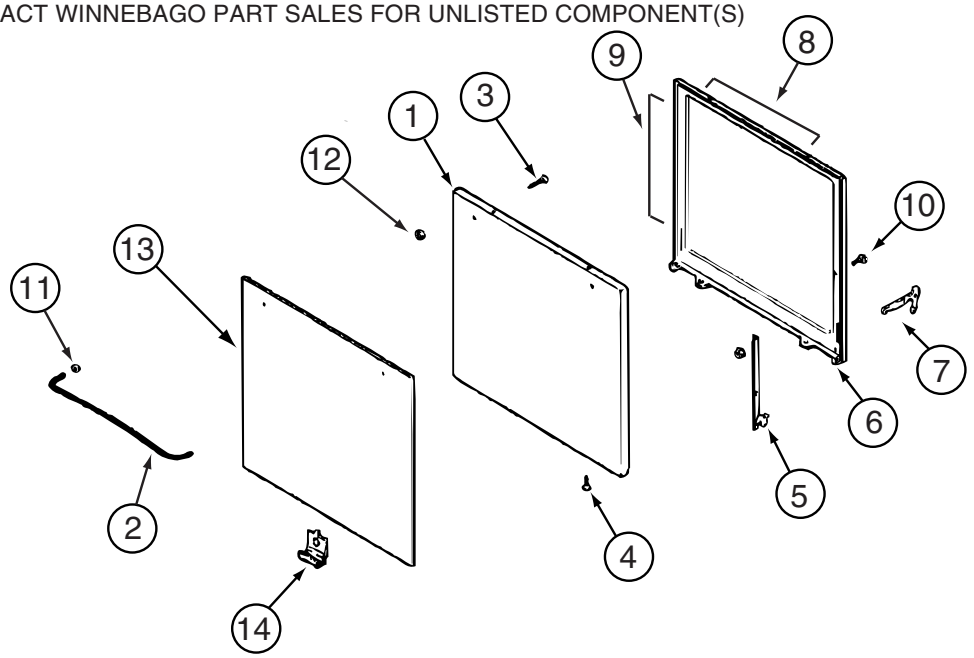

150778-01-01A, 151277-03-01A, 151279-02-01A, 151279-03-01A (CONTINUED)

KEY	PART NUMBER	U/M	DESCRIPTION	VENDOR NO.
1	126023-01-712	EA	PANEL - DOOR (BLACK)	74001190
2	128727-01-701	EA	HANDLE - OVEN DOOR	74003929
5	151277-01-704	EA	HINGE KIT-OVEN DR/LT	12400028
5	151277-01-705	EA	HINGE KIT-OVEN DR/RT	12400029
8	126023-01-732	EA	SEAL/OVEN DR TOP	7212P014-60
9	135066-03-714	EA	SEAL - OVEN DOOR SIDES	7212P039-60
13	102020-01-725	EA	GLASS OUTER	7902P266-60
14	126023-01-738	EA	CLIP - GLASS OVEN/BLACK	7112P093-60
			CONTACT WINNEBAGO PART SALES FOR UNLISTED COMPONENT(S)	

COPYRIGHT © 2006 WINNEBAGO INDUSTRIES INC.

CABINET & APPLIANCE GROUP (CONTINUED)

COMPONENT PARTS FOR CABINET & APPLIANCE LAYOUT (CONTINUED)

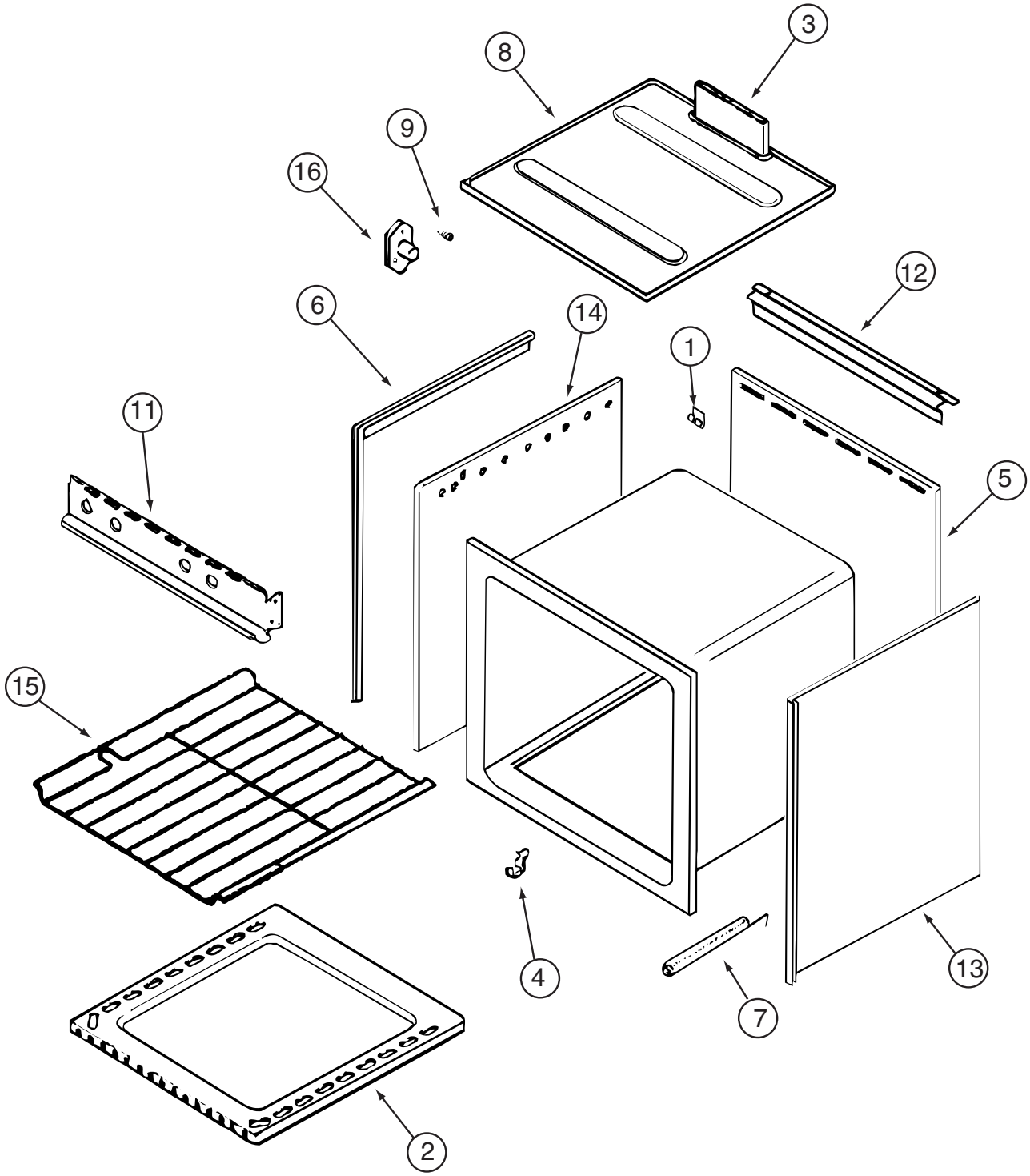

135066-03-01A/04A, 150778-01-01A, 151277-03-01A, 151279-02-01A/02A, 151279-03-01A (CONTINUED)

KEY	PART NUMBER	U/M	DESCRIPTION	VENDOR NO.
1	112881-03-702	EA	CLIP - MAIN TOP	74003998
2	126023-01-731	EA	BOTTOM - OVEN	2205F016-19
3	126023-01-718	EA	FLUE BOX ASSEMBLY	4006W075-80
6	126023-01-713	EA	TRIM - SIDE (RIGHT)	74002827
6	126023-01-714	EA	TRIM - SIDE (LEFT)	74002828
7	135066-03-708	EA	SPRING - OVEN DOOR	7803P053-60
9	128728-01-703	EA	PIN/T-NUT F/HINGE	7103P109-60
11	135066-03-701	EA	PANEL - MANIFOLD - BLACK	74007306
12	112881-01-721	EA	DEFLECTOR/FLUE-BLK-SEALED BR	74002829
15	126023-01-716	EA	RACK - OVEN	74003106

CONTACT WINNEBAGO PART SALES FOR UNLISTED COMPONENT(S)

COPYRIGHT © 2006 WINNEBAGO INDUSTRIES INC.

CHASSIS GROUP

FRAME

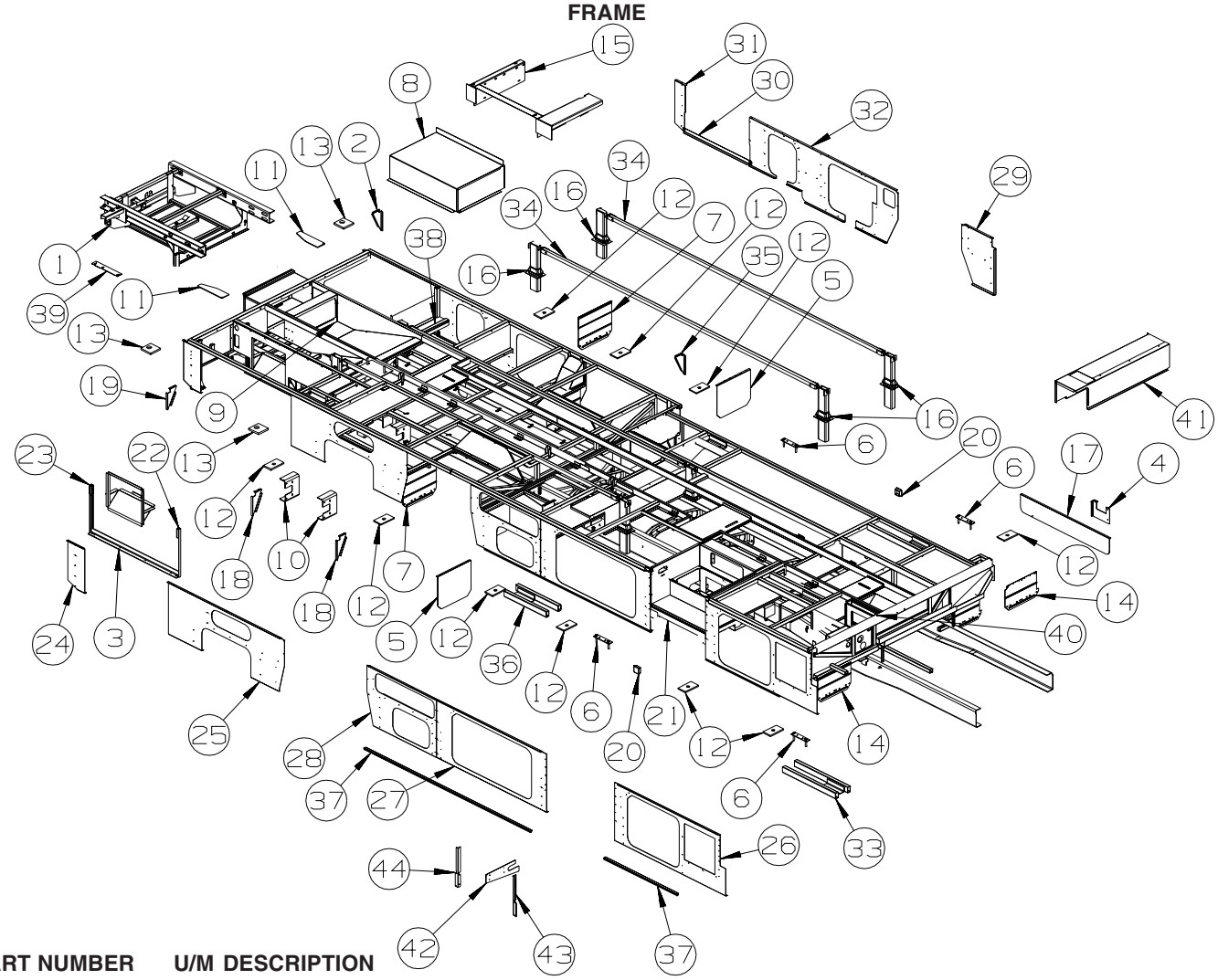

KEY	PART NUMBER	U/M	DESCRIPTION
1	154052-09-01A	EA	CLIP/REAR EXTENSION RAIL - W/HITCH - W/O TIRE CARRIER
2	123440-07-02B	EA	SUPPORT - PANEL - 8.7" X 4.7" - E-COATED
3	129328-02-02B	EA	HANGER - A/C - COACH
4	132606-04-02B	EA	PLATE/SEAL - E-COATED
			FROM: 00-00-00 THRU: 06-13-05
5	134191-01-02B	EA	GUARD/ROCK - STEEL - W/BEND - 18"W X 14.9"H - E-COATED
6	134460-01-02B	EA	PLATE - MOUNTING - E-COATED
7	136391-04-02B	EA	GUARD/ROCK - STEEL - W/ANGLE - 18"W X 16.7"H - E-COATED
8	140930-02-02B	EA	COMPARTMENT - GENERATOR - E-COATED
9	144746-08-02B	EA	COMPARTMENT - FURNACE - E-COATED
10	120867-01-02B	EA	MOUNT - LP TANK - E-COAT
11	133095-01-02B	EA	PLATE - CLIP - E-COATED
12	135712-01-02B	EA	PLATE - BODY MOUNT - E-COATED
13	135712-02-02B	EA	PLATE - BODY MOUNT - E-COATED
14	136388-07-02B	EA	GUARD/ROCK - STEEL - 18" X 11" - E-COATED
15	138113-10-02B	EA	OUTRIGGER/GENERATOR - E-COATED
16	139724-01-01A	EA	BOOT - TOWER - BLACK
17	149346-01-02B	EA	SHIELD - HEAT EXHAUST - E-COATED
18	123440-16-02B	EA	SUPPORT - PANEL - 13.8"/10.6" X 4.7" - E-COATED
19	123440-06-02B	EA	SUPPORT - PANEL - 8.7"/5.5" X 4.7" - E-COATED
20	119845-01-01A	EA	PLUG/PLASTIC - 1 1/2" SQUARE - BLACK
21	152362-01-02B	EA	BOX ASM-ENTRANCE,STEP,E-COAT
22	133833-01-02B	EA	HANGER - A/C - E-COATED
23	133833-02-02B	EA	HANGER - A/C - E-COATED
24	152068-04-02B	EA	PLATE/SEAL - E-COATED
25	155467-04-02B	EA	SEAL PLANE - E-COATED
26	155467-01-02B	EA	SEAL PLANE - E-COATED
27	155467-02-02B	EA	SEAL PLANE - E-COATED
28	155467-03-02B	EA	SEAL PLANE - E-COATED

COPYRIGHT © 2006 WINNEBAGO INDUSTRIES INC.

CHASSIS GROUP (CONTINUED)

FRAME (CONTINUED)

KEY	PART NUMBER	U/M	DESCRIPTION
29	155467-05-02B	EA	SEAL PLANE - E-COATED
30	133612-05-02B	EA	ZEE/SEAL PLANE - BOTTOM - E-COATED
31	152068-07-02B	EA	PLATE/SEAL - E-COATED
32	155467-06-02B	EA	SEAL PLANE - E-COATED
33	147997-04-02B	EA	BRACKET - F/SLIDEOUT - E-COATED
34	150924-09-02B	EA	TUBE - TENSION - E-COATED
35	123440-17-02B	EA	SUPPORT - PANEL - 17.8"/14.5" X 4.7" - E-COATED
36	147997-08-02B	EA	BRACKET - F/SLIDEOUT - E-COATED
37	126516-01-01A	FT	TRIM - VINYL/EXTRUDED - 8'
38	152274-04-02B	EA	SUPPORT/COMPARTMENT - POWER CORD - E-COATED
39	136538-01-02B	EA	SHIM - HITCH - E-COATED
40	155706-01-02B	EA	PANEL/MOUNT - AUXILIARY HEATER - E-COATED
41	138405-12-02B	EA	COMPARTMENT - RAM - E-COATED
			FROM: 00-00-00 THRU: 07-17-05
41	138405-17-02B	EA	COMPARTMENT - RAM - E-COATED
			FROM: 07-18-05 THRU: 99-99-99
42	134611-01-02B	EA	SUPPORT-STEP BOX
43	136814-01-02B	EA	ANGLE-FILLER,STEP
44	136814-02-02B	EA	ANGLE-FILLER,STEP,LH

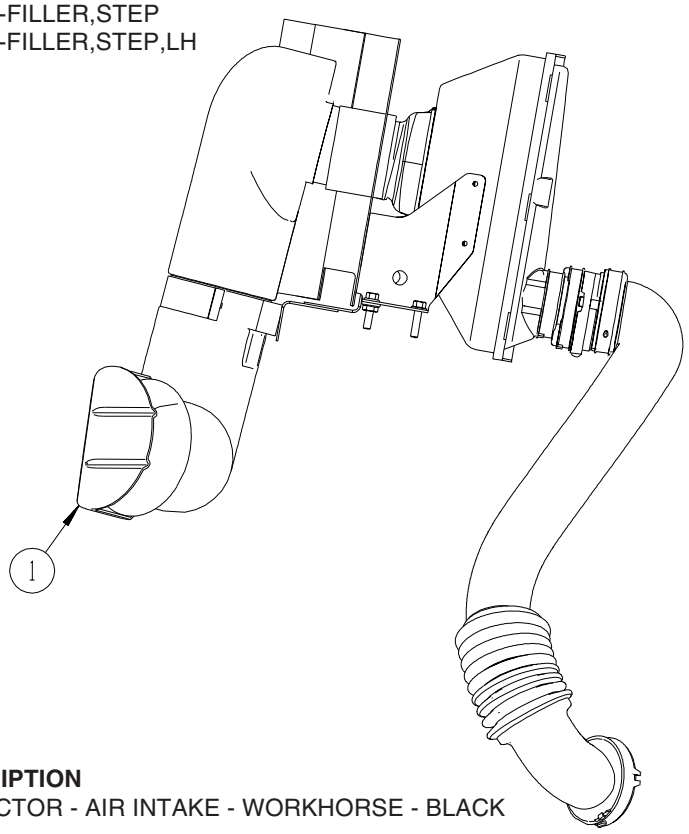

WORKHORSE AIR INTAKE

KEY	PART NUMBER	U/M	DESCRIPTION
1	154181-01-10A	EA	DEFLECTOR - AIR INTAKE - WORKHORSE - BLACK

COPYRIGHT © 2006 WINNEBAGO INDUSTRIES INC.

CHASSIS GROUP (CONTINUED)

FRONT END

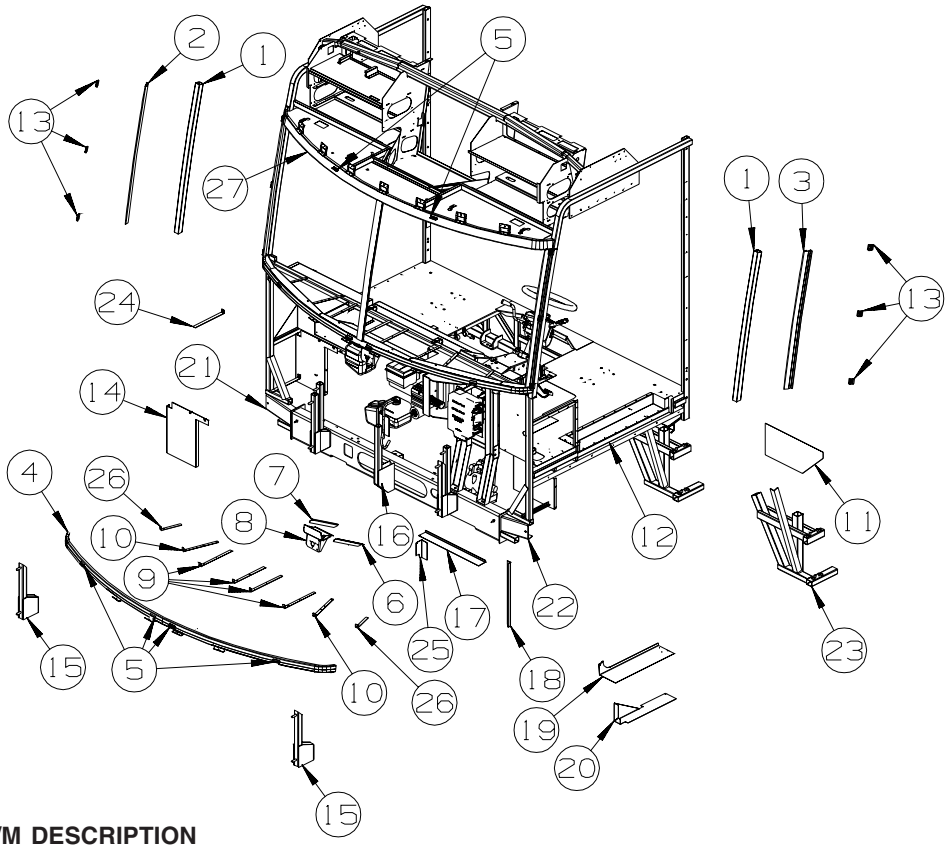

WORKHORSE

KEY	PART NUMBER	U/M	DESCRIPTION
1	117273-01-01A	EA	TUBE - SUPPORT - A-PILLAR
2	121269-05-01B	EA	FRAME - WINDSHIELD - A-PILLAR - MILL
3	121269-06-01B	EA	FRAME - WINDSHIELD - A-PILLAR - MILL
4	124974-01-01B	EA	SUPPORT-WINDSHIELD,LOWER,MLL
5	126289-65-01B	EA	ANGLE - FORMED
6	134371-01-01B	EA	ANGLE/MOUNT - WIPER MOTOR
7	134371-02-01B	EA	ANGLE/MOUNT - WIPER MOTOR
8	134506-02-01B	EA	BRACKET - WIPER MOTOR
9	137047-04-01B	EA	STRAP - DEFROSTER PLENUM
10	137047-05-01B	EA	STRAP - DEFROSTER PLENUM
11	137496-01-01B	EA	PANEL - SPLASH GUARD
12	146492-02-01B	EA	PANEL - STEPWELL
13	148935-01-01B	EA	BRACKET-WINDSHIELD ,MILL
14	121962-02-02B	EA	SHIELD/SPLASH - HEADLIGHT - E-COATED
15	134807-13-02B	EA	SUPPORT - FRONT - E-COATED
16	134807-14-02B	EA	SUPPORT - FRONT/RESERVOIR - E-COATED
17	137037-01-02B	EA	ANGLE/FILLER - E-COATED
18	137037-02-02B	EA	ANGLE/FILLER - E-COATED
19	137041-01-02B	EA	ANGLE/FILLER - MOTOR COVER - E-COATED
20	137045-01-02B	EA	PANEL-FILLER,BULKHEAD ,E-CT
21	137048-02-02B	EA	CHANNEL/SUPPORT - FRONT END - E-COATED
22	137048-01-02B	EA	CHANNEL/SUPPORT - FRONT END - E-COATED
23	138340-03-02B	EA	SUPPORT/STEP - DRIVER - E-COATED
24	139119-01-02B	EA	STRAP-BENT, W/HOLE - E-COATED
25	139131-01-02B	EA	ANGLE-W/NOTCH,E-CT
26	137047-06-01B	EA	STRAP - DEFROSTER PLENUM
27	124975-01-01B	EA	SUPPORT - WINDSHIELD, UPPER, MILL

COPYRIGHT © 2006 WINNEBAGO INDUSTRIES INC.

CHASSIS GROUP (CONTINUED)

FRONT END (CONTINUED)

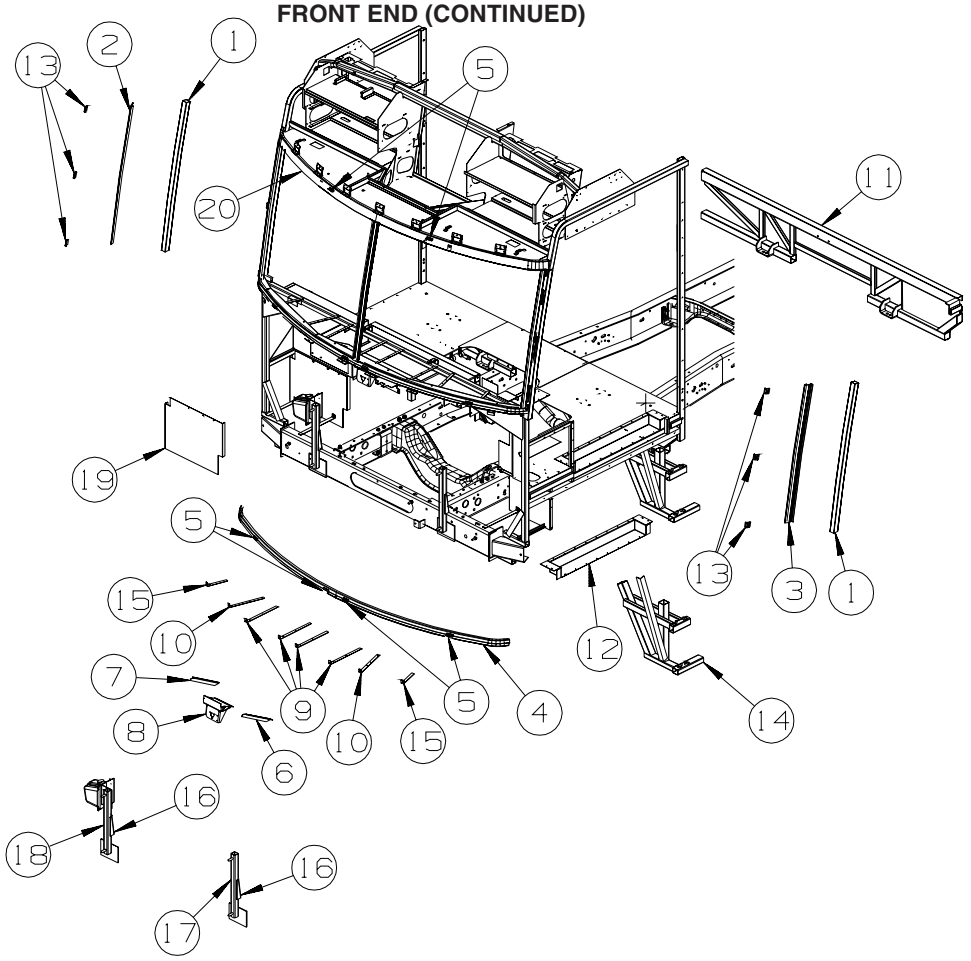

FORD

KEY	PART NUMBER	U/M	DESCRIPTION
1	117273-01-01A	EA	TUBE - SUPPORT - A-PILLAR
2	121269-05-01B	EA	FRAME - WINDSHIELD - A-PILLAR - MILL
3	121269-06-01B	EA	FRAME - WINDSHIELD - A-PILLAR - MILL
4	124974-01-01B	EA	SUPPORT-WINDSHIELD,LOWER,MLL
5	126289-65-01B	EA	ANGLE - FORMED
6	134371-01-01B	EA	ANGLE/MOUNT - WIPER MOTOR
7	134371-02-01B	EA	ANGLE/MOUNT - WIPER MOTOR
8	134506-02-01B	EA	BRACKET - WIPER MOTOR
9	137047-04-01B	EA	STRAP - DEFROSTER PLENUM
10	137047-05-01B	EA	STRAP - DEFROSTER PLENUM
11	137496-01-01B	EA	PANEL - SPLASH GUARD
12	146492-02-01B	EA	PANEL - STEPWELL
13	148935-01-01B	EA	BRACKET-WINDSHIELD ,MILL
14	138340-03-02B	EA	SUPPORT/STEP - DRIVER - E-COATED
15	137047-06-01B	EA	STRAP - DEFROSTER PLENUM
16	117622-01-02B	EA	BRACE - TUBE/BUMPER - VERTICAL - E-COATED
17	152916-04-02B	EA	SUPPORT - FRONT - E-COATED
18	152916-03-02B	EA	SUPPORT - FRONT - E-COATED
19	144679-02-02B	EA	SHIELD/SPLASH - HEADLIGHT - E-COATED
20	124975-01-01B	EA	SUPPORT - WINDSHIELD, UPPER, MILL

COPYRIGHT © 2006 WINNEBAGO INDUSTRIES INC.

22,000 GVWR WORKHORSE (G38R)

KEY	PART NUMBER	U/M	DESCRIPTION
	128528-03-000	EA	BOLT - U-JOINT - 3/8-24 X 3/4
	128528-04-000	EA	STRAP - BEARING - 1480 JOINT
	138616-09-02B	EA	BRACKET/BEARING MOUNT - FRONT/248" WHEEL BASE - E-COATED
	138616-10-02B	EA	BRACKET/BEARING MOUNT - MID-RR/248" WHEEL BASE - E-COATED
	140691-04-000	EA	DRIVESHAFT - BALANCED - 4 SECTION - WH W22 - 248" WB

24,000 GVWR WORKHORSE 248 WHEELBASE (G37B, G38J, G38R)

KEY	PART NUMBER	U/M	DESCRIPTION
	128528-03-000	EA	BOLT - U-JOINT - 3/8-24 X 3/4
	128528-04-000	EA	STRAP - BEARING - 1480 JOINT
	138126-05-000	EA	DRIVESHAFT - BALANCED - 4 SECTION - WH W24 - 248" WB
	138616-01-02B	EA	BRACKET/BEARING MOUNT - FRONT/248" WHEEL BASE - E-COATED
	138616-02-02B	EA	BRACKET/BEARING MOUNT - MID-RR/248" WHEEL BASE -E-COATED

24,000 GVWR WORKHORSE 266 WHEELBASE (G38T)

KEY	PART NUMBER	U/M	DESCRIPTION
	128528-03-000	EA	BOLT - U-JOINT - 3/8-24 X 3/4
	128528-04-000	EA	STRAP - BEARING - 1480 JOINT
	138126-06-000	EA	DRIVESHAFT- BALANCED - 4 SECTION - WH24 - 266” WB

COPYRIGHT © 2006 WINNEBAGO INDUSTRIES INC.

CHASSIS GROUP (CONTINUED)

EXHAUST

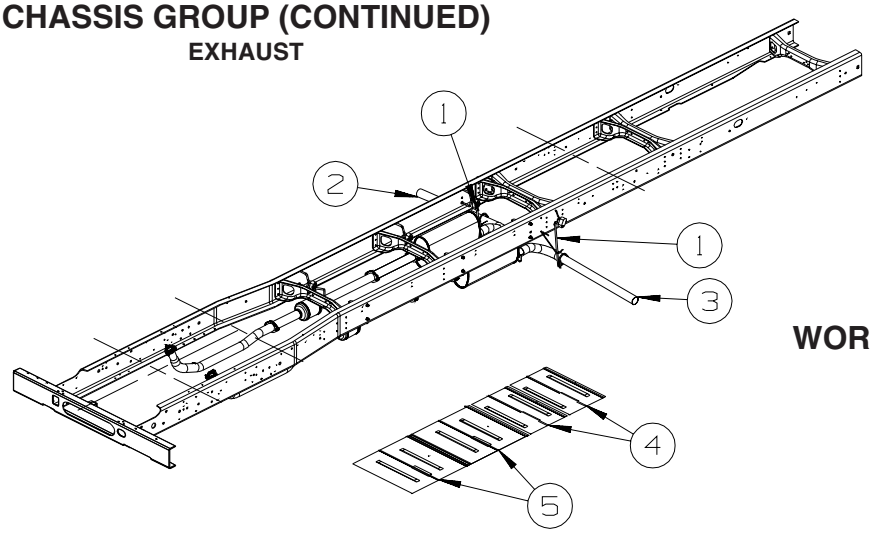

WORKHORSE

G33V
208 INCH WHEELBASE

KEY	PART NUMBER	U/M	DESCRIPTION
1	122392-09-02B	EA	HANGER - TAILPIPE - E-COATED
	094918-06-000	EA	CLAMP - EXHAUST - 3" - HEAVY DUTY
			FROM: 00-00-00 THRU: 06-30-05
2	122529-04-000	EA	PIPE - EXHAUST - RH
3	142985-01-000	EA	PIPE - EXHAUST
			FROM: 00-00-00 THRU: 06-30-05
3	122529-05-000	EA	PIPE - EXHAUST, LH
			FROM: 07-01-05 THRU: 99-99-99
3	094918-01-000	EA	CLAMP - EXHAUST - 3" - GUILLOTINE STYLE
			FROM: 00-00-00 THRU: 06-30-05
4	143712-01-02B	EA	SHIELD/HEAT - EXHAUST - E-COATED
5	143712-02-02B	EA	SHIELD - HEAT/EXHAUST - E-COATED

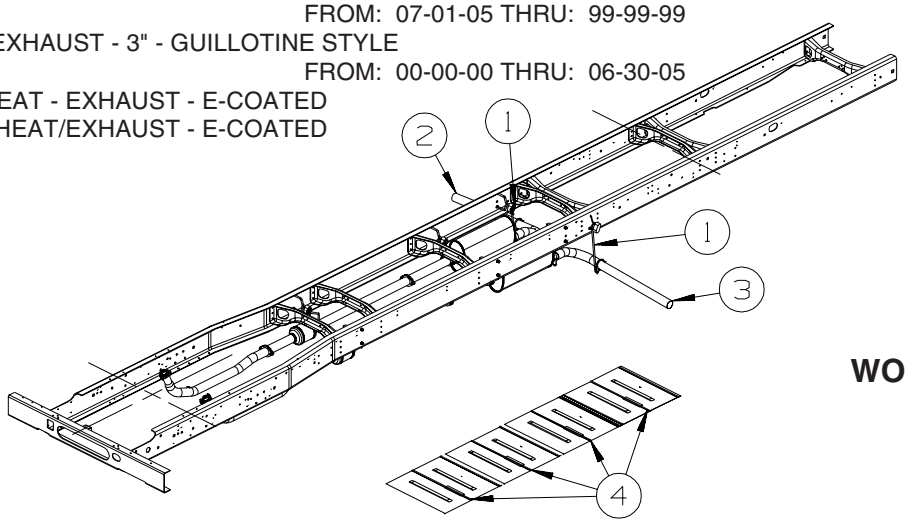

WORKHORSE

G35U
228 INCH WHEELBASE

KEY	PART NUMBER	U/M	DESCRIPTION
1	122392-09-02B	EA	HANGER - TAILPIPE - E-COATED
	094918-06-000	EA	CLAMP - EXHAUST - 3" - HEAVY DUTY
			FROM: 00-00-00 THRU: 06-30-05
2	122529-04-000	EA	PIPE - EXHAUST - RH
3	098762-05-000	EA	EXTENSION - EXHAUST - STRAIGHT - 3" O.D X 7.9" LONG - SST
			FROM: 00-00-00 THRU: 06-30-05
3	122529-05-000	EA	PIPE - EXHAUST, LH
			FROM: 07-01-05 THRU: 99-99-99
3	094918-01-000	EA	CLAMP - EXHAUST - 3" - GUILLOTINE STYLE
			FROM: 00-00-00 THRU: 06-30-05
4	143712-02-02B	EA	SHIELD - HEAT/EXHAUST - E-COATED

COPYRIGHT © 2006 WINNEBAGO INDUSTRIES INC.

CHASSIS GROUP (CONTINUED)

EXHAUST (CONTINUED)

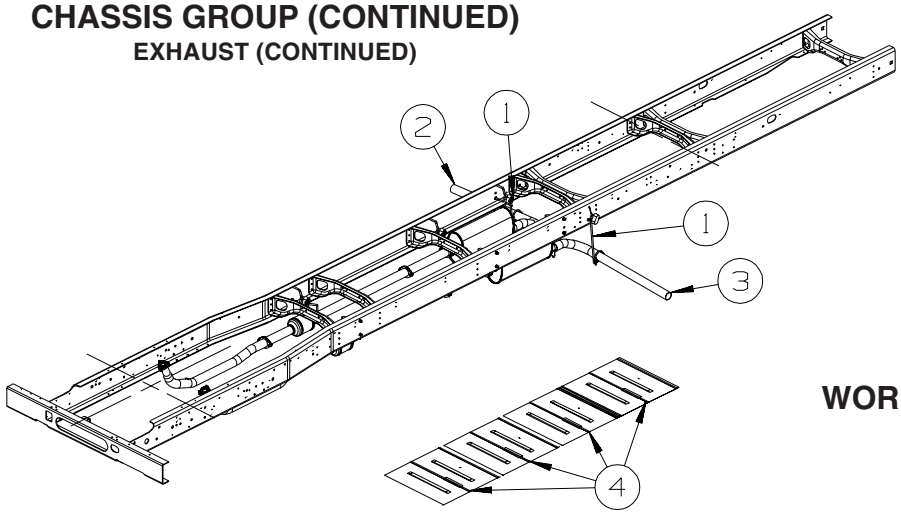

WORKHORSE

G35A
228 INCH WHEELBASE

KEY	PART NUMBER	U/M	DESCRIPTION
1	122392-09-02B	EA	HANGER - TAILPIPE - E-COATED
	094918-06-000	EA	CLAMP - EXHAUST - 3" -HEAVY DUTY
2	122529-04-000	EA	PIPE - EXHAUST - RH
3	122529-05-000	EA	PIPE - EXHAUST, LH
4	143712-02-02B	EA	SHIELD - HEAT/EXHAUST - E-COATED

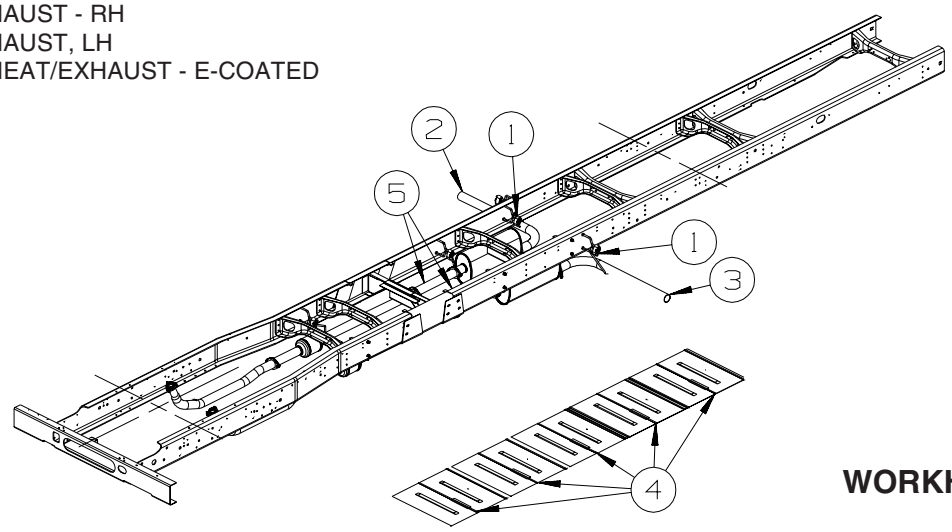

WORKHORSE

G37B, G38J, G38R
228 TO 248 STRETCH

KEY	PART NUMBER	U/M	DESCRIPTION	
1	122392-09-02B	EA	HANGER - TAILPIPE - E-COATED	
1	094918-06-000	EA	CLAMP - EXHAUST - 3" - HEAVY DUTY	
2	122529-04-000	EA	PIPE - EXHAUST - RH	
3	122529-05-000	EA	PIPE - EXHAUST, LH	
4	143712-02-02B	EA	SHIELD - HEAT/EXHAUST - E-COATED	
5	137652-01-000	EA	PIPE - EXHAUST - W/FLANGES	FROM: 00-00-00 THRU: 05-08-05
5	137652-06-000	EA	PIPE - EXHAUST - W/FLANGES	FROM: 05-09-05 THRU: 99-99-99

COPYRIGHT © 2006 WINNEBAGO INDUSTRIES INC.

CHASSIS GROUP (CONTINUED)

EXHAUST (CONTINUED)

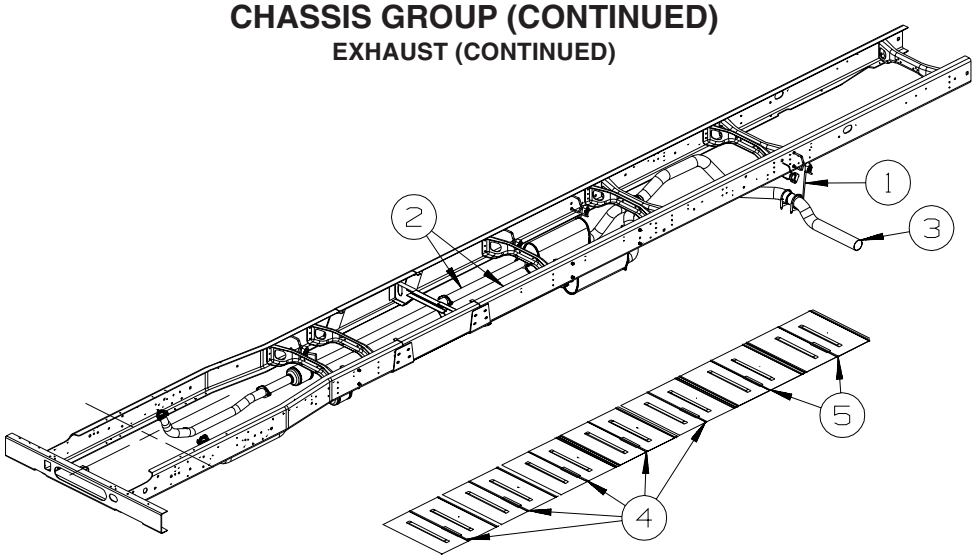

WORKHORSE

G38T
228 TO 266 STRETCH

KEY	PART NUMBER	U/M	DESCRIPTION
1	122392-15-02B	EA	HANGER - TAILPIPE - E-COATED
	094918-05-000	EA	CLAMP - EXHAUST - 4 7/16" - GUILLOTINE STYLE
2	137652-02-000	EA	PIPE - EXHAUST W/FLANGES
			FROM: 00-00-00 THRU: 05-08-05
2	137652-07-000	EA	PIPE - EXHAUST W/FLANGES
			FROM: 05-09-05 THRU: 99-99-99
3	154358-01-000	EA	PIPE - EXHAUST - 4" DIAMETER - WORKHORSE
4	143712-02-02B	EA	SHIELD - HEAT/EXHAUST - E-COATED
5	143712-05-02B	EA	SHIELD - HEAT/EXHAUST - E-COATED

COPYRIGHT © 2006 WINNEBAGO INDUSTRIES INC.

CHASSIS GROUP (CONTINUED)

EXHAUST (CONTINUED)

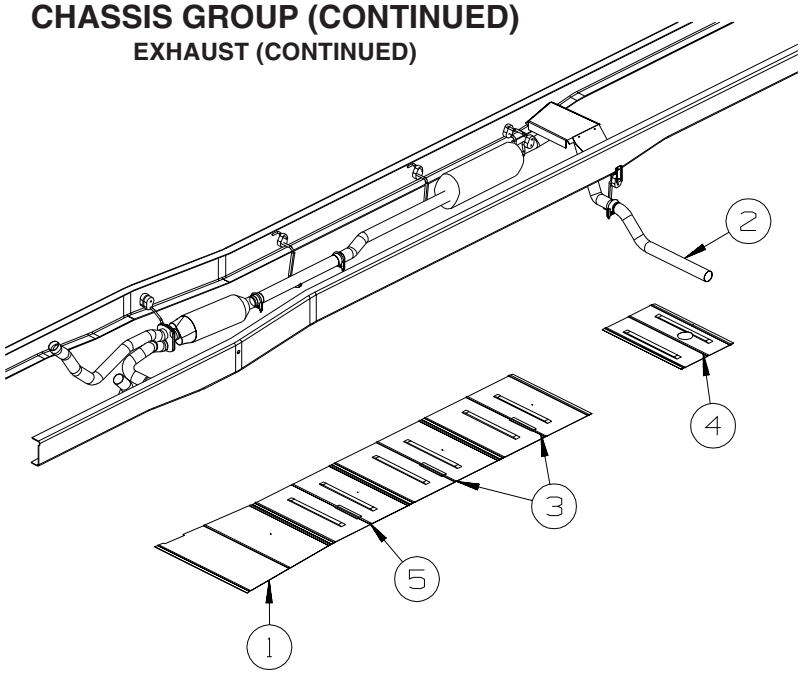

FORD
G33V

208" WHEELBASE

KEY	PART NUMBER	U/M	DESCRIPTION
1	128756-01-02B	EA	SHIELD - HEAT/EXHAUST - 33.9" X 16.9" - E-COATED
2	129726-02-000	EA	PIPE - EXHAUST
			FROM: 00-00-00 THRU: 07-10-05
2	129726-04-000	EA	PIPE - EXHAUST
			FROM: 07-11-05 THRU: 99-99-99
3	143712-05-02B	EA	SHIELD/HEAT - EXHAUST - E-COATED
4	143712-07-02B	EA	SHIELD/HEAT - EXHAUST - E-COATED
			FROM: 00-00-00 THRU: 02-15-06
5	143712-07-02B	EA	SHIELD/HEAT - EXHAUST - E-COATED

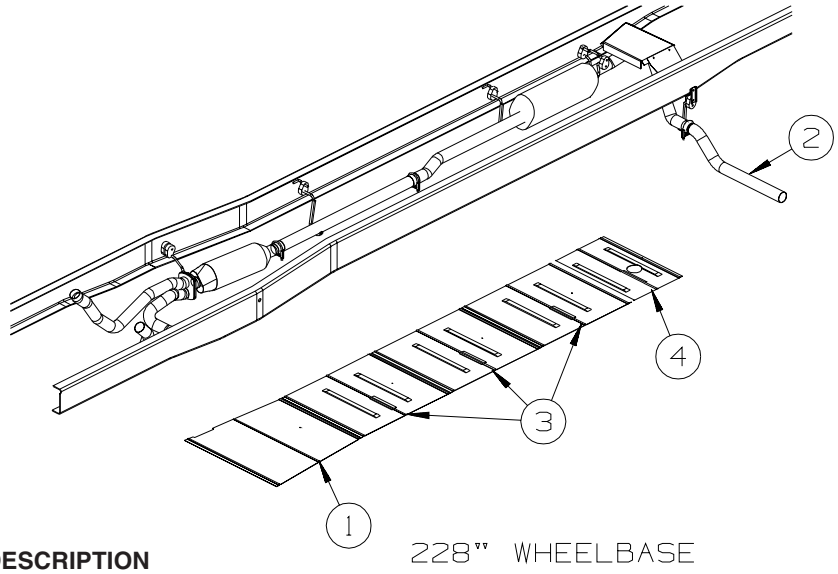

FORD
G35A, G35U

228" WHEELBASE

KEY	PART NUMBER	U/M	DESCRIPTION
1	128756-01-02B	EA	SHIELD - HEAT/EXHAUST - 33.9" X 16.9" - E-COATED
2	129726-02-000	EA	PIPE - EXHAUST
			FROM: 00-00-00 THRU: 07-10-05
2	129726-04-000	EA	PIPE - EXHAUST
			FROM: 07-11-05 THRU: 99-99-99
3	143712-05-02B	EA	SHIELD/HEAT - EXHAUST - E-COATED
4	143712-07-02B	EA	SHIELD/HEAT - EXHAUST - E-COATED

COPYRIGHT © 2006 WINNEBAGO INDUSTRIES INC.

CHASSIS GROUP (CONTINUED)

FUEL

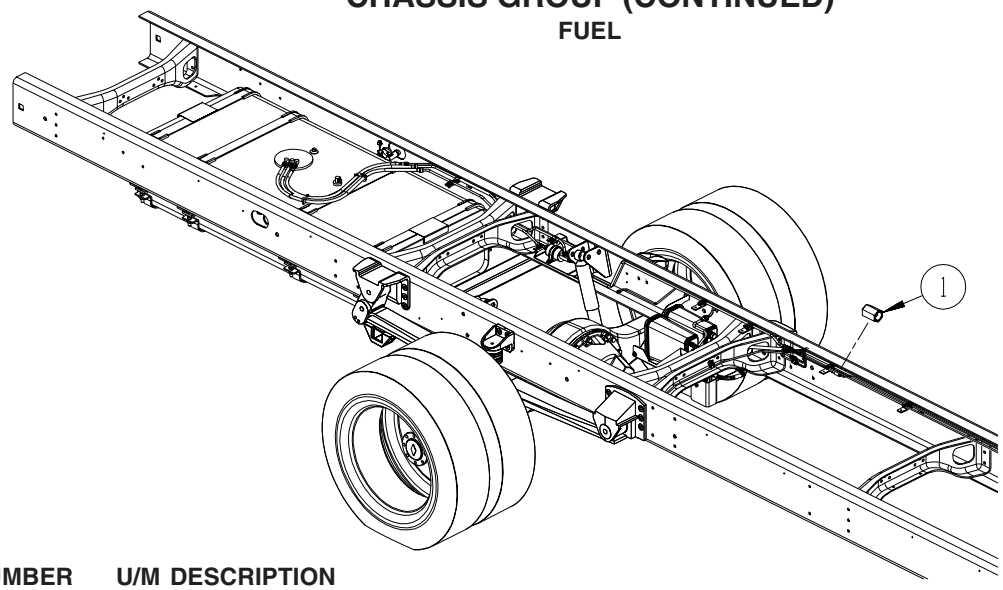

WORKHORSE

KEY	PART NUMBER	U/M	DESCRIPTION
1	098779-02-000	EA	COUPLER - FUEL LINE - 1.2" LONG X 16MM THREAD - STRETCHED CHASSIS ONLY

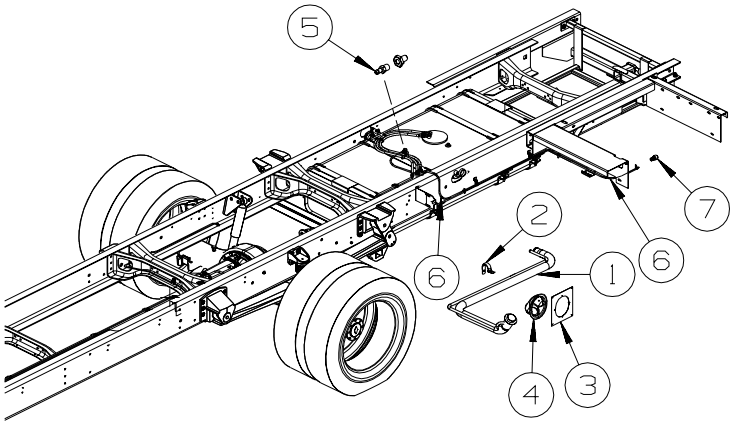

2005 WORKHORSE

KEY	PART NUMBER	U/M	DESCRIPTION
1	136300-02-000	EA	NECK - FUEL FILL
2	140728-02-02B	EA	BRACKET - FUEL FILL - E-COATED
3	139138-01-02B	EA	PLATE - FUEL FILL - E-COATED
4			CHASSIS SUPPLIED
5	068382-06-000	EA	BUSHING - BRASS - 3/8"MPT X 1/8"FPT
5	114254-01-000	EA	ADAPTER - 1/4 BARB X 1/8 MPT
6	128139-03-000	FT	HOSE - FUEL - LOW PERMEABILITY - 1/4" DIAMETER
7	084884-01-000	EA	PLUG - BRASS - 3/8"

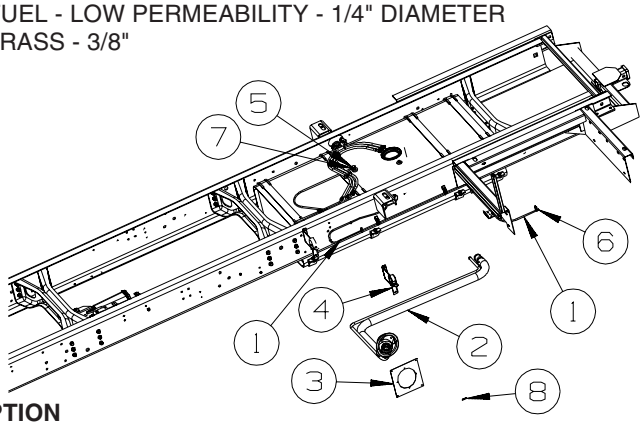

2006 WORKHORSE

KEY	PART NUMBER	U/M	DESCRIPTION
1	128139-03-000	FT	HOSE - FUEL - LOW PERMEABILITY - 1/4" DIAMETER
2	136300-02-000	EA	NECK - FUEL FILL
3	139138-01-02B	EA	PLATE - FUEL FILL - E-COATED
4	140728-03-02B	EA	BRACKET - FUEL FILL - E-COATED
5	068382-06-000	EA	BUSHING - BRASS - 3/8"MPT X 1/8"FPT
6	084884-01-000	EA	PLUG - BRASS - 3/8"
7	114254-01-000	EA	ADAPTER - 1/4 BARB X 1/8 MPT
8	099069-01-000	EA	SEAL - RUBBER - CLOSED SPONGE - .5" WIDE X .12" THICK-BLK

COPYRIGHT © 2006 WINNEBAGO INDUSTRIES INC.

CHASSIS GROUP (CONTINUED)

FUEL (CONTINUED)

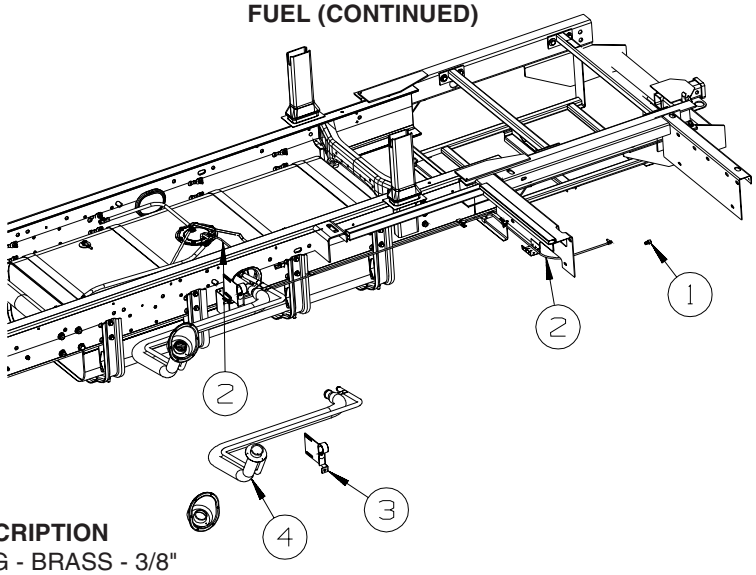

FORD

KEY	PART NUMBER	U/M	DESCRIPTION
1	084884-01-000	EA	PLUG - BRASS - 3/8"
2	128139-03-000	FT	HOSE - FUEL - LOW PERMEABILITY - 1/4" DIAMETER
3	140728-02-02B	EA	BRACKET - FUEL FILL - E-COATED
4	153027-01-000	EA	NECK - FUEL FILL

COPYRIGHT © 2006 WINNEBAGO INDUSTRIES INC.

CHASSIS GROUP (CONTINUED)

HYDRAULIC LEVELING

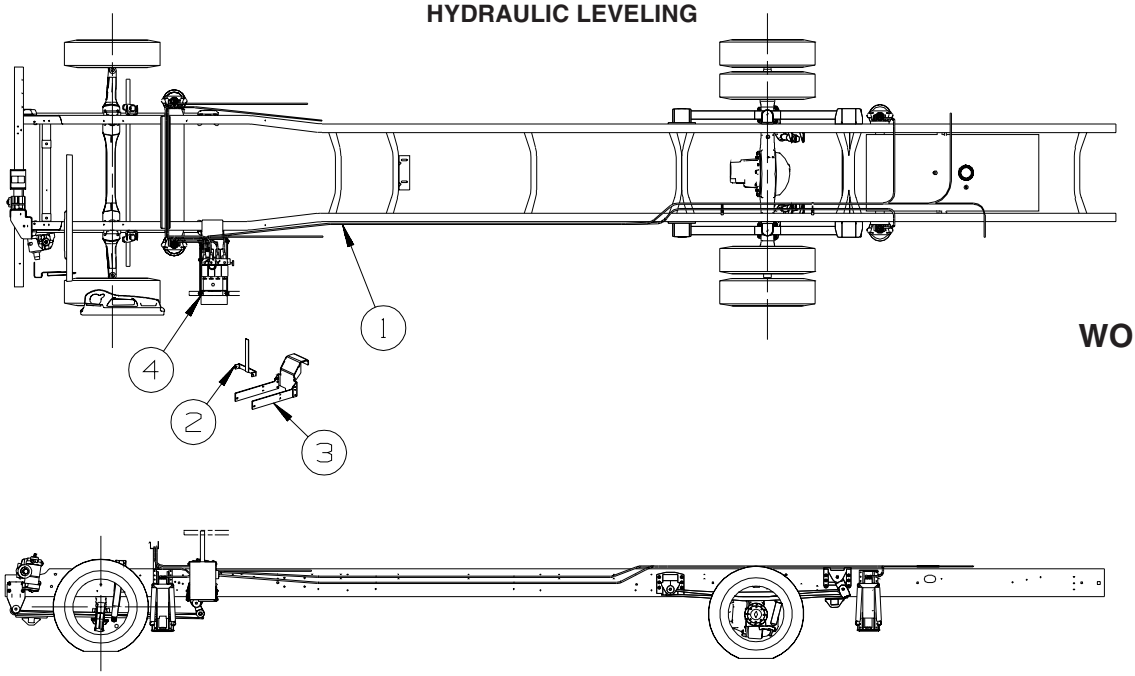

WORKHORSE

KEY	PART NUMBER	U/M	DESCRIPTION
1*	100536-57-000	EA	HOSE KIT - F/LEVELING JACKS - G37B, G38G , G38J, G38R
1*	100536-60-000	EA	HOSE KIT - F/LEVELING JACKS - G33V, G35A, G35U
1	100536-62-000	EA	HOSE KIT - F/LEVELING JACKS - G38T
2	149900-01-02B	EA	BRACKET - PUMP/LEVELING SYSTEM - E-COATED
3	150001-01-02B	EA	BRACKET - PUMP/LEVELING SYSTEM - E-COATED
4*	144226-34-000	EA	LEVELING SYSTEM - 325 SYSTEM W/2 SLIDEOUTS - DOUBLE SLIDEOUT ROOMS
4*	144226-32-000	EA	LEVELING SYSTEM - W/3 SIDEOUT ROOMS - TRIPLE SLIDEOUT ROOMS
4*	153452-01-000	EA	LEVELING SYS - 625 SYS W/2 SLDOUT - DOUBLE SLIDEOUT ROOMS - AUTOMATIC SYSTEM
4*	153452-06-000	EA	LEVELING SYSTEM - 625 SYS W/3 SLIDEOUTS - TRIPLE SLIDEOUT ROOMS - AUTOMATIC SYSTEM

***COMPONENT PARTS LISTED LATER IN THIS GROUP**

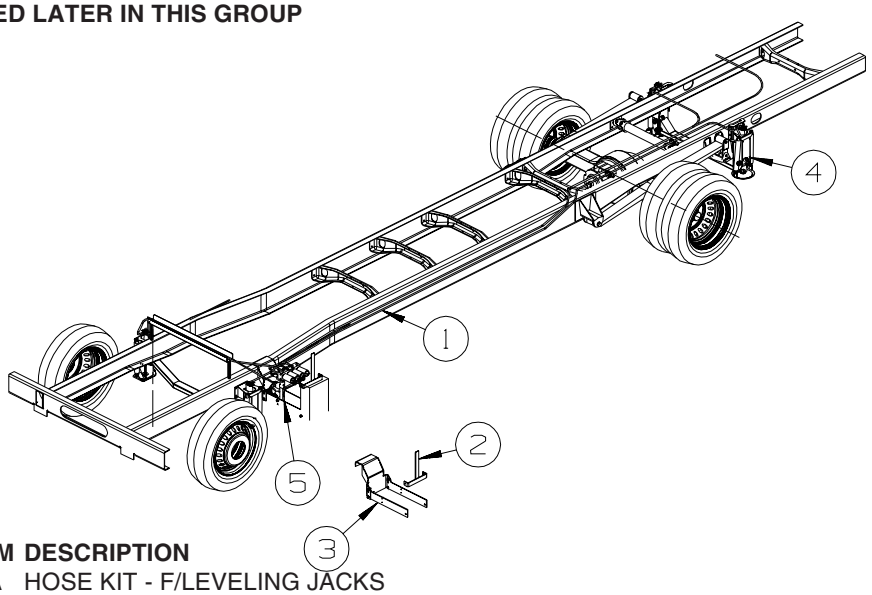

FORD

KEY	PART NUMBER	U/M	DESCRIPTION
1*	100536-60-000	EA	HOSE KIT - F/LEVELING JACKS
2	149900-01-02B	EA	BRACKET - PUMP/LEVELING SYSTEM - E-COATED
3	150001-01-02B	EA	BRACKET - PUMP/LEVELING SYSTEM - E-COATED
4*	128571-07-000	EA	JACK/CROSSMEMBER ASSEMBLY - REAR - 325
4	128571-08-000	EA	JACK/CROSSMEMBER ASSEMBLY - REAR - 625 - FORD - AUTOMATIC SYSTEM
5*	144226-40-000	EA	LEVELING SYSTEM - 325 SYSTEM W/2 SLIDEOUTS - FORD - DOUBLE SLIDEOUT ROOMS
5*	144226-47-000	EA	LEVELING SYSTEM - 325 SYSTEM W/3 SLIDEOUTS - FORD - TRIPLE SLIDEOUT ROOMS
5*	153452-07-000	EA	LEVELING SYSTEM - 625 SYSTEM W/2 SLIDEOUTS - DOUBLE SLIDEOUT ROOMS - AUTOMATIC SYS.
5*	153452-08-000	EA	LEVELING SYSTEM - W/2 SLIDEOUTS - TRIPLE SLIDEOUT ROOMS - AUTOMATIC SYSTEM

***COMPONENT PARTS LISTED LATER IN THIS GROUP**

COPYRIGHT © 2006 WINNEBAGO INDUSTRIES INC.

CHASSIS GROUP (CONTINUED)

COMPONENT PARTS FOR HYDRAULIC LEVELING

100536-57-000

KEY	PART NUMBER	U/M	DESCRIPTION	VENDOR NO.
	100536-09-700	EA	HOSE-HYDRAULIC-324"	RAP91489/AP2464
	100536-26-700	EA	HOSE - HYDRAULIC-1/4" X 100"	RAP90077/AP7832
	115767-01-705	EA	HOSE-HYDRAULIC - 1/4" X 60"	RAP4073/AP4073
	135250-02-700	EA	HOSE-HYDRAULIC - 1/4" X 300"	RAP90806/AP4064

100536-60-000

KEY	PART NUMBER	U/M	DESCRIPTION	VENDOR NO.
	100536-09-701	EA	HOSE-HYDRAULIC-1/4" X 60"	RAP4073/AP4073
	100536-25-700	EA	HOSE-HYDRAULIC-1/4" X 306"	RAP91487/AP4904
	100536-26-700	EA	HOSE - HYDRAULIC-1/4" X 100"	RAP90077/AP7832
	100536-29-700	EA	HOSE-HYDRAULIC-1/4" X 280"	RAP91485/AP4729

128571-07-000

KEY	PART NUMBER	U/M	DESCRIPTION	VENDOR NO.
	100532-12-707	EA	SPRING KIT (PAIR)	R3847
	144226-29-701	EA	CYLINDER - 9K (325)	RAP91185/AP31982
	131306-02-701	EA	FOOT/JACK - 9K & 12K	RAP8464/AP17525
	144226-01-700	EA	SWITCH - WARNING/MAGNETIC	RAP90968/AP26641

144226-32-000

KEY	PART NUMBER	U/M	DESCRIPTION	VENDOR NO.
	100532-03-717	EA	VALVE-PRESS., RETURN SHUTTLE	RAP7964
	100532-09-704	EA	VALVE-PRESS SOLENOID(LARGE)	RAP0642
	100532-09-710	EA	SOLENOID-INTERMITENT DUTY	RAP0533
	100532-12-707	EA	SPRING KIT (PAIR)	R3847
	100532-32-704	EA	CHIME - JACK WARNING	RAP90681/AP19812
	100532-53-700	EA	CYLINDER W/O FOOT - 9K	RAP90491/AP15891
	131306-11-704	EA	PRESSURE SWITCH - 50 PSI	RAP2082
	131306-12-702	EA	VALVE-PRESSURE SOLENOID (SMALL)	RAP90729/AP24604
	144226-03-700	EA	MOTOR ONLY - 4 1/2" MONARCH	RAP90415
	144226-08-702	EA	SENSOR/BI - AXIS - PROGRAMABLE	RAP91172/AP28010
	144226-20-700	EA	TOUCH PAD - 325 GAS	RAP91259/AP31350
	144226-26-700	EA	PUMP MOTOR/TANK ASM-PARKER	RAP91243/AP29808
	144226-26-701	EA	ENCLOSURE BOX W/SENSING UNIT	RAP91263/AP31343
	144226-26-702	EA	PUMP MOTOR ONLY - PARKER	RAP91244/AP31771

144226-40-000

KEY	PART NUMBER	U/M	DESCRIPTION	VENDOR NO.
	100532-03-717	EA	VALVE-PRESS., RETURN SHUTTLE	RAP7964
	100532-09-710	EA	SOLENOID-INTERMITENT DUTY	RAP0533
	100532-12-707	EA	SPRING KIT (PAIR)	R3847
	131306-02-700	EA	FOOT - 6K JACK	RAP2004/AP13882
	131306-11-704	EA	PRESSURE SWITCH - 50 PSI	RAP2082
	131306-12-702	EA	VALVE-PRESSURE SOLENOID (SMALL)	RAP90729/AP24604
	144226-01-700	EA	SWITCH - WARNING/MAGNETIC	RAP90968/AP26641
	144226-08-702	EA	SENSOR/BI - AXIS - PROGRAMABLE	RAP91172/AP28010
	144226-08-703	EA	PUMP MOTOR/TANK ASM-MONARCH	RAP91282/AP30348
	144226-20-700	EA	TOUCH PAD - 325 GAS	RAP91259/AP31350
	144226-25-700	EA	ENCLOSURE BOX W/SENSING UNIT	RAP91262/AP31348
	144226-26-702	EA	PUMP MOTOR ONLY - PARKER	RAP91244/AP31771
	144226-29-700	EA	CYLINDER - 6K (325)	RAP91184/AP31656
	144226-29-701	EA	CYLINDER - 9K (325)	RAP91185/AP31982

COPYRIGHT © 2006 WINNEBAGO INDUSTRIES INC.

CHASSIS GROUP (CONTINUED)

COMPONENT PARTS FOR HYDRAULIC LEVELING (CONTINUED)

144226-47-000

KEY	PART NUMBER	U/M	DESCRIPTION	VENDOR NO.
	100532-03-717	EA	VALVE-PRESS., RETURN SHUTTLE	RAP7964
	100532-09-710	EA	SOLENOID-INTERMITENT DUTY	RAP0533
	100532-12-707	EA	SPRING KIT (PAIR)	R3847
	131306-02-700	EA	FOOT - 6K JACK	RAP2004/AP13882
	131306-11-701	EA	CONTROL BOX - 310 SYSTEM	RAP90019/AP10086
	131306-12-702	EA	VALVE-PRESSURE SOLENOID (SMALL)	RAP90729/AP24604
	144226-01-700	EA	SWITCH - WARNING/MAGNETIC	RAP90968/AP26641
	144226-08-702	EA	SENSOR/BI - AXIS - PROGRAMABLE	RAP91172/AP28010
	144226-08-703	EA	PUMP MOTOR/TANK ASM-MONARCH	RAP91282/AP30348
	144226-26-701	EA	ENCLOSURE BOX W/SENSING UNIT	RAP91263/AP31343
	144226-26-702	EA	PUMP MOTOR ONLY - PARKER	RAP91244/AP31771
	144226-29-700	EA	CYLINDER - 6K (325)	RAP91184/AP31656
	144226-29-701	EA	CYLINDER - 9K (325)	RAP91185/AP31982

153452-01-000

KEY	PART NUMBER	U/M	DESCRIPTION	VENDOR NO.
	100532-03-716	EA	SOLENOID-CONTINUOUS DUTY	RAP7505
	100532-03-717	EA	VALVE-PRESS., RETURN SHUTTLE	RAP7964
	100532-03-726	EA	SWITCH - PRESSURE	RAP8003
	100532-09-705	EA	SWITCH-PRESS - 3000 LB.	RAP0993
	100532-09-710	EA	SOLENOID-INTERMITENT DUTY	RAP0533
	100532-12-707	EA	SPRING KIT (PAIR)	R3847
	100532-53-700	EA	CYLINDER W/O FOOT - 9K	RAP90491/AP15891
	131306-02-701	EA	FOOT/JACK - 9K & 12K	RAP8464/AP17525
	131306-11-704	EA	PRESSURE SWITCH - 50 PSI	RAP2082
	131306-12-702	EA	VALVE-PRESS SOLENOID (SMALL)	RAP90729/AP24604
	144226-01-700	EA	SWITCH - WARNING/MAGNETIC	RAP90968/AP26641
	144226-08-702	EA	SENSOR/BI-AXIS - PROGRAMABLE	RAP91172/AP28010
	144226-08-703	EA	PUMP MOTOR/TANK ASM-MONARCH	RAP91282/AP30348
	144226-26-702	EA	PUMP MOTOR ONLY - PARKER	RAP91244/AP31771
	153452-01-700	EA	ENCLOSURE BOX W/SENSING UNIT	RAP91260/AP30831

153452-06-000

KEY	PART NUMBER	U/M	DESCRIPTION	VENDOR NO.
	100532-03-716	EA	SOLENOID-CONTINUOUS DUTY	RAP7505
	100532-03-717	EA	VALVE-PRESS., RETURN SHUTTLE	RAP7964
	100532-03-726	EA	SWITCH - PRESSURE	RAP8003
	100532-09-705	EA	SWITCH-PRESS - 3000 LB.	RAP0993
	100532-09-710	EA	SOLENOID-INTERMITENT DUTY	RAP0533
	100532-12-707	EA	SPRING KIT (PAIR)	R3847
	100532-53-700	EA	CYLINDER W/O FOOT - 9K	RAP90491/AP15891
	131306-02-701	EA	FOOT/JACK - 9K & 12K	RAP8464/AP17525
	131306-11-704	EA	PRESSURE SWITCH - 50 PSI	RAP2082
	131306-12-702	EA	VALVE-PRESS SOLENOID (SMALL)	RAP90729/AP24604
	144226-01-700	EA	SWITCH - WARNING/MAGNETIC	RAP90968/AP26641
	144226-08-702	EA	SENSOR/BI-AXIS - PROGRAMABLE	RAP91172/AP28010
	144226-08-703	EA	PUMP MOTOR/TANK ASM-MONARCH	RAP91282/AP30348
	144226-26-702	EA	PUMP MOTOR ONLY - PARKER	RAP91244/AP31771
	153452-06-700	EA	ENCLOSURE BOX W/SENSING UNIT	RAP91271/AP30934

COPYRIGHT © 2006 WINNEBAGO INDUSTRIES INC.

CHASSIS GROUP (CONTINUED)

COMPONENT PARTS FOR HYDRAULIC LEVELING (CONTINUED)

153452-07-000

KEY	PART NUMBER	U/M	DESCRIPTION	VENDOR NO.
	100532-03-716	EA	SOLENOID-CONTINUOUS DUTY	RAP7505
	100532-03-717	EA	VALVE-PRESS., RETURN SHUTTLE	RAP7964
	100532-03-726	EA	SWITCH - PRESSURE	RAP8003
	100532-09-705	EA	SWITCH-PRESS - 3000 LB.	RAP0993
	100532-09-710	EA	SOLENOID-INTERMITENT DUTY	RAP0533
	100532-12-707	EA	SPRING KIT (PAIR)	R3847
	131306-02-700	EA	FOOT - 6K JACK	RAP2004/AP13882
	131306-11-704	EA	PRESSURE SWITCH - 50 PSI	RAP2082
	131306-12-702	EA	VALVE-PRESS SOLENOID (SMALL)	RAP90729/AP24604
	144226-01-700	EA	SWITCH - WARNING/MAGNETIC	RAP90968/AP26641
	144226-08-702	EA	SENSOR/BI-AXIS - PROGRAMABLE	RAP91172/AP28010
	144226-08-703	EA	PUMP MOTOR/TANK ASM-MONARCH	RAP91282/AP30348
	144226-26-702	EA	PUMP MOTOR ONLY - PARKER	RAP91244/AP31771
	144226-29-700	EA	CYLINDER - 6K (325)	RAP91184/AP31656
	144226-29-701	EA	CYLINDER - 9K (325)	RAP91185/AP31982
	153452-01-700	EA	ENCLOSURE BOX W/SENSING UNIT	RAP91260/AP30831

153452-08-000

KEY	PART NUMBER	U/M	DESCRIPTION	VENDOR NO.
	100532-03-716	EA	SOLENOID-CONTINUOUS DUTY	RAP7505
	100532-03-717	EA	VALVE-PRESS., RETURN SHUTTLE	RAP7964
	100532-03-726	EA	SWITCH - PRESSURE	RAP8003
	100532-09-705	EA	SWITCH-PRESS - 3000 LB.	RAP0993
	100532-09-710	EA	SOLENOID-INTERMITENT DUTY	RAP0533
	100532-12-707	EA	SPRING KIT (PAIR)	R3847
	131306-02-700	EA	FOOT - 6K JACK	RAP2004/AP13882
	131306-11-704	EA	PRESSURE SWITCH - 50 PSI	RAP2082
	131306-12-702	EA	VALVE-PRESS SOLENOID (SMALL)	RAP90729/AP24604
	144226-01-700	EA	SWITCH - WARNING/MAGNETIC	RAP90968/AP26641
	144226-08-702	EA	SENSOR/BI-AXIS - PROGRAMABLE	RAP91172/AP28010
	144226-08-703	EA	PUMP MOTOR/TANK ASM-MONARCH	RAP91282/AP30348
	144226-26-702	EA	PUMP MOTOR ONLY - PARKER	RAP91244/AP31771
	144226-29-700	EA	CYLINDER - 6K (325)	RAP91184/AP31656
	144226-29-701	EA	CYLINDER - 9K (325)	RAP91185/AP31982
	153452-06-700	EA	ENCLOSURE BOX W/SENSING UNIT	RAP91271/AP30934

COPYRIGHT © 2006 WINNEBAGO INDUSTRIES INC.

CHASSIS GROUP (CONTINUED)

WHEEL, TIRE, COVERS &/OR LINERS

KEY	PART NUMBER	U/M	DESCRIPTION
	080208-04-000	EA	LUG WRENCH - 1.2”/1.3” SOCKETS X 13.8" LONG - WORKHORSE
	080208-05-000	EA	BAR/LEVERAGE - LUG WRENCH - .75"DIA. - WORKHORSE
*	145580-02-000	EA	LINER - WHEEL(SET OF 4) - 22.5"/10 BOLT - WORKHORSE
*	150723-01-000	EA	COVER/HUB-SET-FT & RR HUBS/NUT CVRS/TOOL - FORD ALUMINUM WHEELS
	051377-06-000	EA	VALVE STEM ASM-VS-12223R
	077030-01-000	EA	EXTENSION - VALVE STEM - 1.25"
	077030-10-000	EA	EXTENSION - VALVE STEM - .50"
	095012-07-000	EA	STABILIZER - VALVE EXTENSION - LIVE - 4"
	095012-09-000	EA	EXTENSION - VALVE STEM - LIVE - 7.7"
	095012-10-000	EA	EXTENSION - VALVE STEM - LIVE - 8.5"

***COMPONENT PARTS LISTED LATER IN THIS GROUP**

COMPONENT PARTS FOR WHEEL, TIRE, COVERS &/OR LINERS

145580-02-000

KEY	PART NUMBER	U/M	DESCRIPTION	VENDOR NO.
	110435-04-705	EA	DECAL-CTR HUB 2 3/4" DIAMO	2 3/4 DECAL DIAMOND
	110435-05-700	EA	CAP-CENTER, POP-OUT 4 1/2"	V22510-POC
	145580-01-702	EA	COVER-LUG NUT/JAM NUT 22M	V22501-EJN
	145580-01-703	EA	TOOL-INSTALLATION	V22501-TOL
	145580-02-700	EA	LINER - WHEEL/FRONT - 1EA=1	V22569-FWC
	145580-02-701	EA	LINER - WHEEL/REAR - 1EA=1	V22569-RWC

150723-01-000

KEY	PART NUMBER	U/M	DESCRIPTION	VENDOR NO.
	110435-04-705	EA	DECAL-CTR HUB 2 3/4"	2 3/4 DECAL DIAMOND
	110435-05-700	EA	CAP-CENTER 4.50"D W/O DECAL	V22510-POC
	145580-01-702	EA	COVER-LUG NUT/JAM NUT 22M	V19582-EJN
	145580-01-703	EA	TOOL-INSTALLATION	V22501-TOL
	150723-01-700	EA	COVER - HUB/FRONT W/CAP	VAC8275-FHC
	150723-01-701	EA	COVER - HUB/REAR	VAC8275-RHC

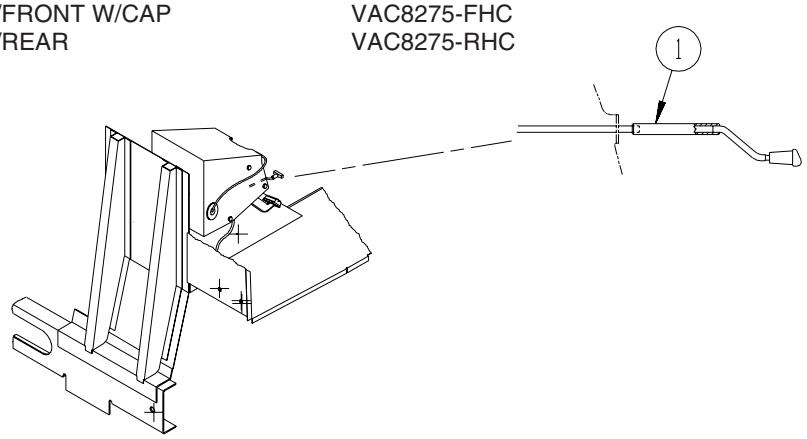

BRAKE

KEY	PART NUMBER	U/M	DESCRIPTION
1	113007-01-000	EA	PIN - SPRING - .375 X 3"

BRAKELINE

KEY	PART NUMBER	U/M	DESCRIPTION
	075466-01-000	EA	UNION - INVERTED FLAIR - 1/4”

COPYRIGHT © 2006 WINNEBAGO INDUSTRIES INC.

CURTAIN & CUSHION GROUP

NOTICE

IN ORDER TO ASSIST OUR PARTS SALES DEPT. IN PROVIDING INTERIOR SOFTWARE ITEMS, PLEASE INCLUDE THE SERIAL NUMBER AND THE COLOR CODE NUMBER FROM THE VEHICLE CERTIFICATION LABEL WHEN ORDERING. THIS LABEL IS LOCATED ON THE LEFT SIDEWALL AT THE END OF THE DASH (A-BODY),OR ON THE DRIVER'S DOOR LATCH PLATE (C-BODY).

AN EXAMPLE OF A COLOR CODE NUMBER IS B07, WHICH DESIGNATES AN OVERALL COLOR SCHEME OF A PARTICULAR UNIT. THE COLOR LISTED AFTER THE ITEM DESCRIPTION ON THE MICROFICHE, INDICATES THE OVERALL UNIT COLOR. ORDER THE ITEM YOU DESIRE ACCORDING TO UNIT COLOR CODE. IF ALL COLORS USE THE SAME ITEM NO COLOR CODE WILL BE NOTED.

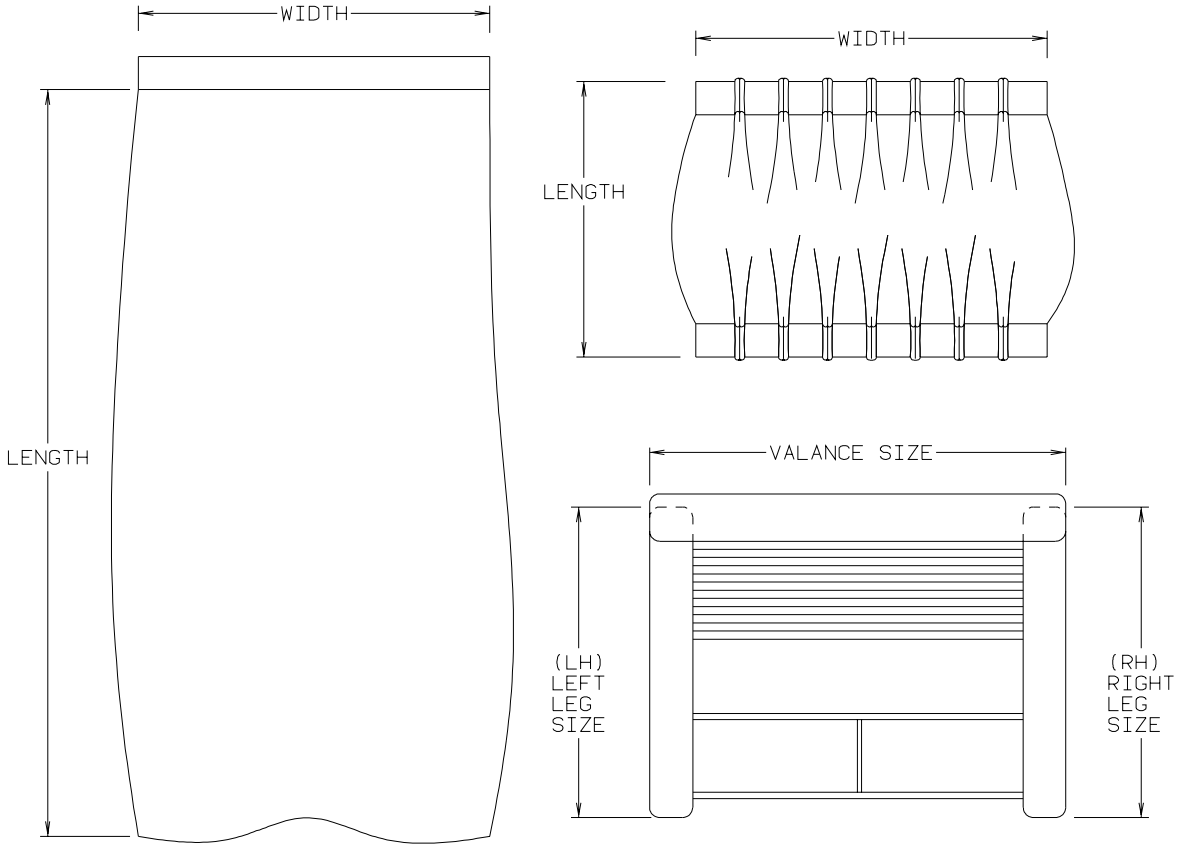

NOTE: USE THIS ILLUSTRATION WHEN DETERMINING LENGTH AND WIDTH MEASUREMENTS FOR CURTAINS. YOU WILL NOTE THE WIDTH MEASUREMENT IS TAKEN ON THE TOP OF THE CURTAIN WITH THE CURTAIN FULLY EXTENDED. THE LENGTH MEASUREMENT IS TAKEN FROM TOP TO BOTTOM. LEFT AND RIGHT WINDOW LEGS ARE DETERMINED WHEN FACING THE WINDOW.

COPYRIGHT © 2006 WINNEBAGO INDUSTRIES INC.

CURTAIN & CUSHION GROUP (CONTINUED)

CUSHION LAYOUT

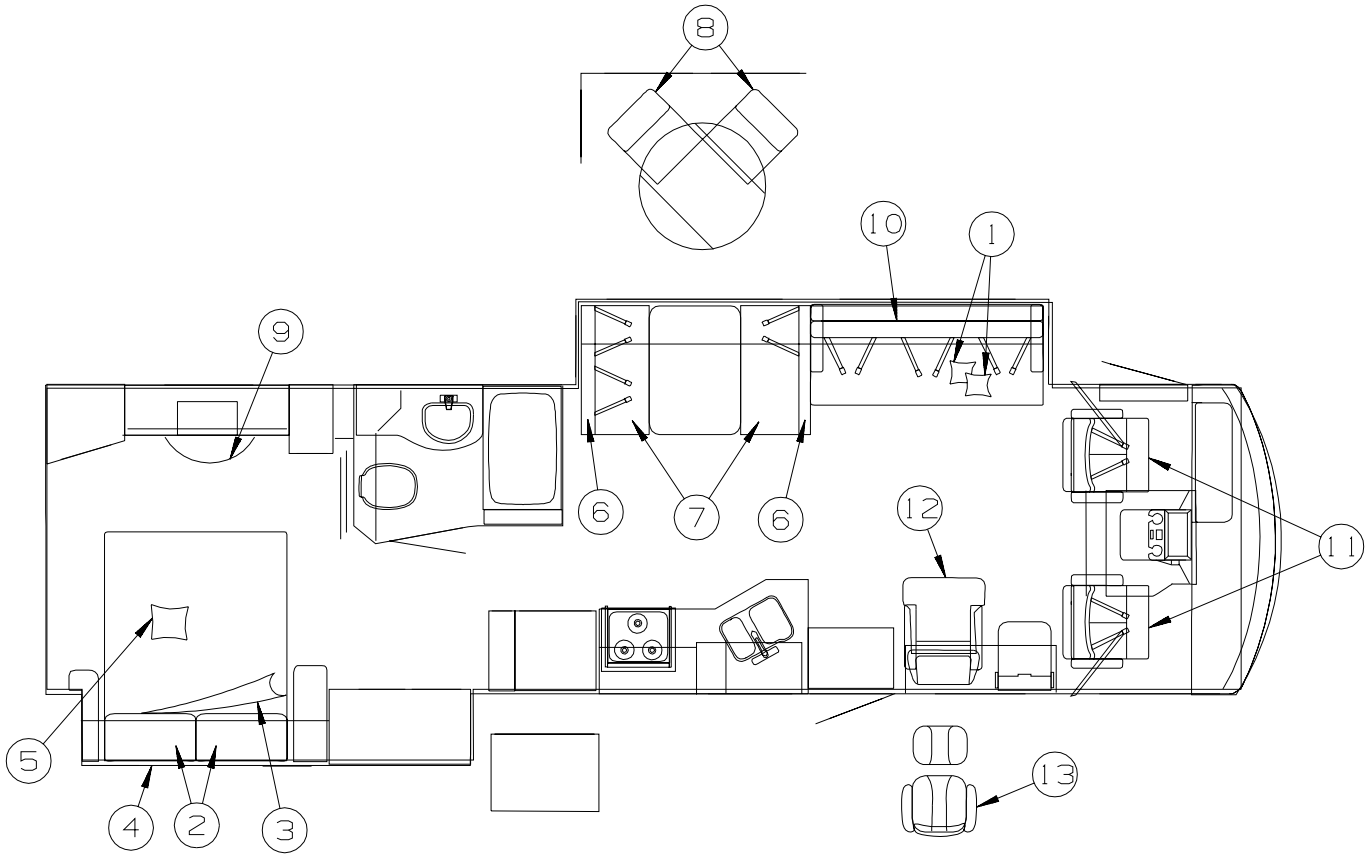

KEY	PART NUMBER	U/M	DESCRIPTION
1	132319-81-T89	EA	PILLOW - 17" - W/#36 BUTTON (T89,T90,T91,T92)
1	132319-81-T93	EA	PILLOW - 17" - W/#36 BUTTON (T93,T94,T95,T96)
1	132319-81-T97	EA	PILLOW - 17" - W/#36 BUTTON (T97,T98,T99,T00)
2	126211-14-T89	EA	PILLOW SHAM (T89,T90,T91,T92)
2	126211-09-T93	EA	PILLOW SHAM (T93,T94,T95,T96)
2	126211-09-T97	EA	PILLOW SHAM (T97,T98,T99,T00)
3	132336-03-T89	EA	BEDSPREAD/CAP - 60" X 80" (T89,T90,T91,T92)
3	132336-03-T93	EA	BEDSPREAD/CAP - 60" X 80" (T93,T94,T95,T96)
3	132336-03-T97	EA	BEDSPREAD/CAP - 60" X 80" (T97,T98,T99,T00)
4	146059-02-S76	EA	HEADBOARD - MONTICELLO - 34" X 40" - FABRIC COVERED (T89,T90,T91,T92)
4	146059-02-T93	EA	HEADBOARD - MONTICELLO - 34" X 40" - FABRIC COVERED (T93,T94,T95,T96)
4	146059-02-T97	EA	HEADBOARD - MONTICELLO - 34" X 40" - FABRIC COVERED (T97,T98,T99,T00)
5	132319-60-S76	EA	PILLOW - 17" - W/1" BUTTONS (T89,T90,T91,T92)
5	132319-82-T93	EA	PILLOW - 17" - W/#36 BUTTON (T93,T94,T95,T96)
5	132319-83-T97	EA	PILLOW - 17" - W/#36 BUTTON (T97,T98,T99,T00)
6	154221-01-T89	EA	BACK - DINETTE CUSHION - 12" X 40" (T89,T90,T91,T92)
6	154221-01-T93	EA	BACK - DINETTE CUSHION - 12" X 40" (T93,T94,T95,T96)
6	154221-01-T97	EA	BACK - DINETTE CUSHION - 12" X 40" (T97,T98,T99,T00)
	P54221-01-T89	EA	COVER/BACK - DINETTE CUSHION - 12" X 40" (T89,T90,T91,T92)
	P54221-01-T93	EA	COVER/BACK - DINETTE CUSHION - 12" X 40" (T93,T94,T95,T96)
	P54221-01-T97	EA	COVER/BACK - DINETTE CUSHION - 12" X 40" (T97,T98,T99,T00)
7	142292-05-T89	EA	SEAT - DINETTE CUSHION (SPRUNG) - 23" X 38.5" (T89,T90,T91,T92)
7	142292-05-T93	EA	SEAT - DINETTE CUSHION (SPRUNG) - 23" X 38.5" (T93,T94,T95,T96)
7	142292-05-T97	EA	SEAT - DINETTE CUSHION (SPRUNG) - 23" X 38.5" (T97,T98,T99,T00)
	P42292-05-T89	EA	COVER/SEAT - DINETTE CUSHION (SPRUNG) - 23.5" X 38.5" (T89,T90,T91,T92)
	P42292-05-T93	EA	COVER/SEAT - DINETTE CUSHION (SPRUNG) - 23.5" X 38.5" (T93,T94,T95,T96)
	P42292-05-T97	EA	COVER/SEAT - DINETTE CUSHION (SPRUNG) - 23.5" X 38.5" (T97,T98,T99,T00)
	142366-01-000	EA	FRAME - SPRUNG - DINETTE SEAT
	143730-01-000	EA	CAP - F/DINETTE BRACKET TUBE - PLASTIC

COPYRIGHT © 2006 WINNEBAGO INDUSTRIES INC.

CURTAIN & CUSHION GROUP (CONTINUED)

CUSHION LAYOUT (CONTINUED)

KEY	PART NUMBER	U/M	DESCRIPTION
8	150117-02-T89	EA	CHAIR - DINING
8	150117-02-T90	EA	CHAIR - DINING
8	150117-02-T91	EA	CHAIR - DINING
8	150117-02-T92	EA	CHAIR - DINING
8	150117-02-T93	EA	CHAIR - DINING
8	150117-02-T94	EA	CHAIR - DINING
8	150117-02-T95	EA	CHAIR - DINING
8	150117-02-T96	EA	CHAIR - DINING
8	150117-02-T97	EA	CHAIR - DINING
8	150117-02-T98	EA	CHAIR - DINING
8	150117-02-T99	EA	CHAIR - DINING
8	150117-02-T00	EA	CHAIR - DINING
	135600-CJ-000	EA	CHAIR - FOLDING - LINEN/PORTSMOUTH OAK (T89)
	135600-CK-000	EA	CHAIR - FOLDING - LINEN/CONCERT CHERRY (T90)
	135600-CL-000	EA	CHAIR - FOLDING - LINEN/WASHED MAPLE (T91)
	135600-CM-000	EA	CHAIR - FOLDING - LINEN/SIERRA MAPLE (T92)
	135600-CN-000	EA	CHAIR - FOLDING - COCOA/PORTSMOUTH OAK (T93)
	135600-CP-000	EA	CHAIR - FOLDING - COCOA/CONCERT CHERRY (T94)
	135600-CR-000	EA	CHAIR - FOLDING - COCOA/WASHED MAPLE (T95)
	135600-CS-000	EA	CHAIR - FOLDING - COCOA/SIERRA MAPLE (T96)
	135600-CT-000	EA	CHAIR - FOLDING - ANTIQUE/PORTSMOUTH OAK (T97)
	135600-CU-000	EA	CHAIR - FOLDING - ANTIQUE/CONCERT CHERRY (T98)
	135600-CV-000	EA	CHAIR - FOLDING - ANTIQUE/WASHED MAPLE (T99)
	135600-CW-000	EA	CHAIR - FOLDING - ANTIQUE/SIERRA MAPLE (T00)
9	150547-03-T89	EA	CHAIR - VANITY (T89,T90,T91,T92)
9	150547-03-T93	EA	CHAIR - VANITY (T93,T94,T95,T96)
9	150547-06-T97	EA	CHAIR - VANITY (T97,T98,T99,T00)
10	154509-01-T89	EA	SOFA/SLEEPER - 70" - #926/#802 ARMS/SEAT/BACK (T89,T90,T91,T92)
10	154509-01-T93	EA	SOFA/SLEEPER - 70" - #926/#802 ARMS/SEAT/BACK (T93,T94,T95,T96)
10	154509-01-T97	EA	SOFA/SLEEPER - 70" - #926/#802 ARMS/SEAT/BACK (T97,T98,T99,T00)
10	150679-01-T89	EA	SOFA/SLEEPER - REST EASY - #825/830 ARMS - 30"FF (T89,T90,T91,T92) - REST EASY LOUNGE
10	150679-01-SC0	EA	SOFA/SLEEPER - REST EASY - #825/830 ARMS - 30"FF (T93,T94,T95,T96) - REST EASY LOUNGE
10	150679-01-T97	EA	SOFA/SLEEPER - REST EASY - #825/830 ARMS - 30"FF (T97,T98,T99,T00) - REST EASY LOUNGE
10	150679-04-SC0	EA	SOFA/SLPR - REST EASY (T89,T90,T91,T92,T93,T94,T95,T96) - REST EASY LOUNGE/ULTRALEATHER
10	150679-04-SB4	EA	SOFA/SLEEPER - REST EASY (T97,T98,T99,T00) - REST EASY LOUNGE/ULTRALEATHER
10	150480-11-T89	EA	SOFA/SLEEPER - REST EASY/DUAL -#826/826 ARMS-30"FF (T89, T90, T91, T92) - REST EASY-DUAL
10	150480-11-SC0	EA	SOFA/SLEEPER - REST EASY/DUAL -#826/826 ARMS-30"FF (T93, T94, T95, T96) - REST EASY-DUAL
10	150480-11-T97	EA	SOFA/SLEEPER - REST EASY/DUAL -#826/826 ARMS-30"FF (T97, T98, T99, T00) - REST EASY-DUAL
10	150480-12-S76	EA	SOFA-REST EASY/DUAL (T89, T90, T91, T92, T93, T94, T95, T96) - REST EASY-DUAL/ULTRALEATHER
10	150480-12-S80	EA	SOFA-REST EASY/DUAL (T97,T98,T99,T00) - REST EASY-DUAL/ULTRALEATHER
11	145952-04-T89	EA	SEAT - BUCKET W/LUMBAR - DRIVER/PASSENGER (T89,T90,T91,T92)
11	145952-04-SC0	EA	SEAT - BUCKET W/LUMBAR - DRIVER/PASSENGER (T93,T94,T95,T96)
11	145952-04-T97	EA	SEAT - BUCKET W/LUMBAR - DRIVER/PASSENGER (T97,T98,T99,T00)
11	145952-07-TE4	EA	SEAT- BUCKET W/LUMBAR-DRIVER/PASS(T89,T90,T91,T92,T93,T94,T95,T96) - ULTRALEATHER
11	145952-07-TF0	EA	SEAT - BUCKET W/LUMBAR - DRIVER/PASSENGER(T97,T98,T99,T00) - ULTRALEATHER
12	142958-09-T89	EA	CHAIR-REC./GLIDER-W/SWIVEL BASE/FOOTREST(T89,T90,T91,T92)
12	142958-10-T93	EA	CHAIR-REC./GLIDER-W/SWIVEL BASE/FOOTREST(T93,T94,T95,T96)
12	142958-09-T97	EA	CHAIR-REC./GLIDER-W/SWIVEL BASE/FOOTREST(T97,T98,T99,T00)
12	142958-11-TC4	EA	CHAIR-REC./GLDR-W/SWIVEL BASE/FOOTREST-(T89,T90,T91,T92,T93,T94,T95,T96) - ULTRALEATHER
12	142958-11-TB4	EA	CHAIR - RECLINER/GLDR-W/SWIVEL BASE/FOOTREST-LEATHER(T97,T98,T99,T00) - ULTRALEATHER
13	155369-02-T89	EA	CHAIR/EURO - APOLLO - W/OTTOMAN - (T89,T90,T91,T92,T93,T94,T95,T96) - EURO ULTRALEATHER
13	155369-02-T97	EA	CHAIR/EURO - APOLLO - W/OTTOMAN - (T97,T98,T99,T00) - EURO ULTRALEATHER

COPYRIGHT © 2006 WINNEBAGO INDUSTRIES INC.

CURTAIN & CUSHION GROUP (CONTINUED)

BUCKET SEATS

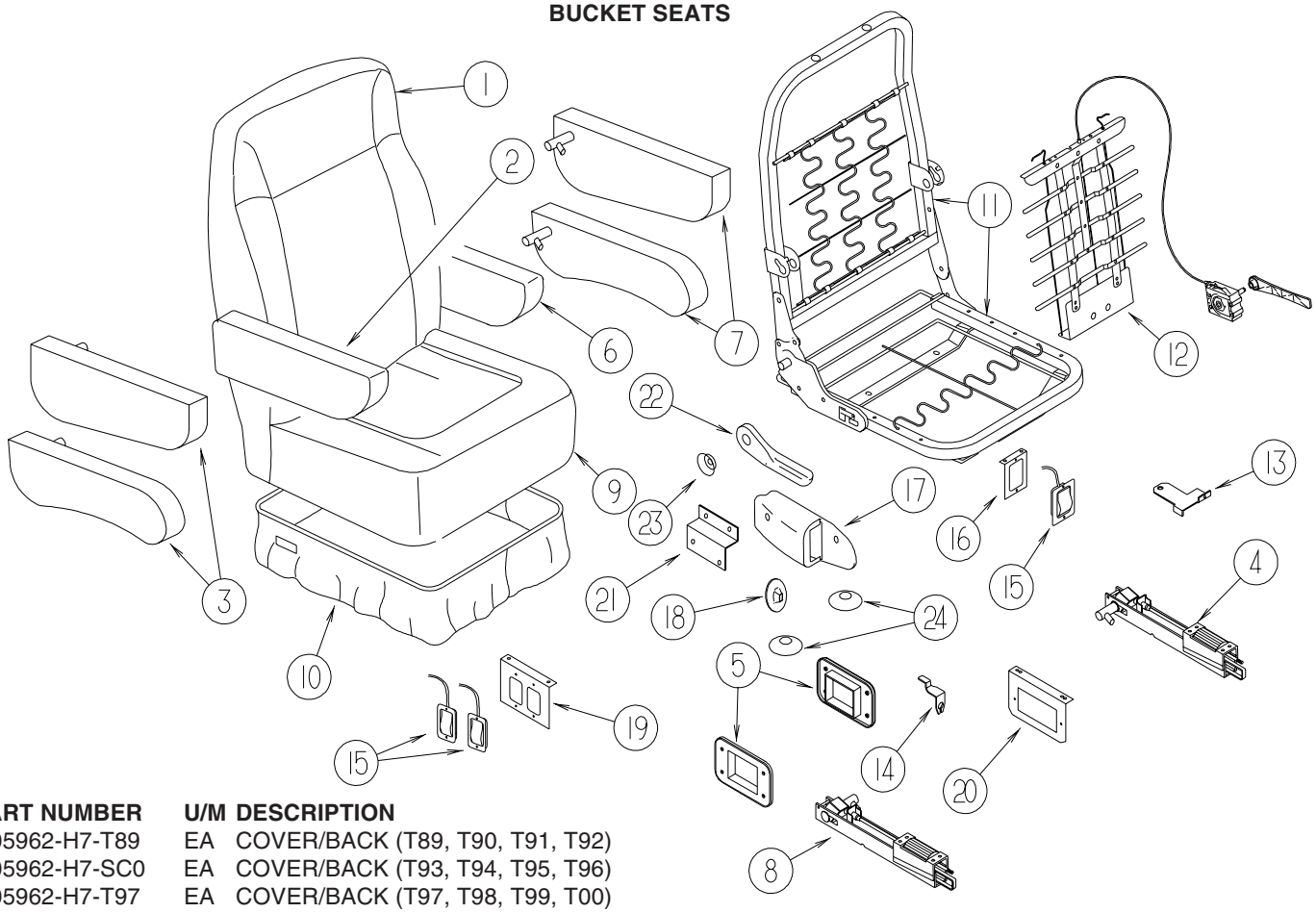

KEY	PART NUMBER	U/M	DESCRIPTION
1	M05962-H7-T89	EA	COVER/BACK (T89, T90, T91, T92)
1	M05962-H7-SC0	EA	COVER/BACK (T93, T94, T95, T96)
1	M05962-H7-T97	EA	COVER/BACK (T97, T98, T99, T00)
1	M05962-S6-TE4	EA	COVER/BACK (T89, T90, T91, T92, T93, T94, T95, T96) - ULTRALEATHER
1	M05962-S6-TF0	EA	COVER/BACK (T97, T98, T99, T00) - ULTRALEATHER
2	148705-01-T89	EA	ARMREST - RIGHT (T89, T90, T91, T92)
2	148705-01-SC0	EA	ARMREST - RIGHT (T93, T94, T95, T96)
2	148705-01-T97	EA	ARMREST - RIGHT (T97, T98, T99, T00)
2	148705-03-S76	EA	ARMREST - RIGHT (T89, T90, T91, T92, T93, T94, T95, T96) - ULTRALEATHER
2	148705-03-S80	EA	ARMREST - RIGHT (T97, T98, T99, T00) - ULTRALEATHER
	P48705-01-T89	EA	COVER/ARMREST - RIGHT (T89, T90, T91, T92)
	P48705-01-SC0	EA	COVER/ARMREST - RIGHT (T93, T94, T95, T96)
	P48705-01-T97	EA	COVER/ARMREST - RIGHT (T97, T98, T99, T00)
	P48705-03-S76	EA	COVER/ARMREST - RIGHT (T89, T90, T91, T92, T93, T94, T95, T96) - ULTRALEATHER
	P48705-03-S80	EA	COVER/ARMREST - RIGHT (T97, T98, T99, T00) - ULTRALEATHER
3	NOT USED		
4	148751-02-000	EA	BRACKET - LEFT (ADJUSTABLE) W/ROLLER
5	148751-03-000	EA	BRACKET - ROLLER TRIM PLATE
6	148705-02-T89	EA	ARMREST - LEFT (T89, T90, T91, T92)
6	148705-02-SC0	EA	ARMREST - LEFT (T93, T94, T95, T96)
6	148705-02-T97	EA	ARMREST - LEFT (T97, T98, T99, T00)
6	148705-04-S76	EA	ARMREST - LEFT (T89, T90, T91, T92, T93, T94, T95, T96) - ULTRALEATHER
6	148705-04-S80	EA	ARMREST - LEFT (T97, T98, T99, T00) - ULTRALEATHER
	P48705-02-T89	EA	COVER/ARMREST - LEFT (T89, T90, T91, T92)
	P48705-02-SC0	EA	COVER/ARMREST - LEFT (T93, T94, T95, T96)
	P48705-02-T97	EA	COVER/ARMREST - LEFT (T97, T98, T99, T00)
	P48705-04-S76	EA	COVER/ARMREST - LEFT (T89, T90, T91, T92, T93, T94, T95, T96) - ULTRALEATHER
	P48705-04-S80	EA	COVER/ARMREST - LEFT (T97, T98, T99, T00) - ULTRALEATHER
7	NOT USED		
8	148751-01-000	EA	BRACKET - RIGHT (ADJUSTABLE) W/ROLLER
9	M05962-H8-T89	EA	COVER/SEAT (T89, T90, T91, T92)
9	M05962-H8-SC0	EA	COVER/SEAT (T93, T94, T95, T96)
9	M05962-H8-T97	EA	COVER/SEAT (T97, T98, T99, T00)
9	M05962-S7-TE4	EA	COVER/SEAT (T89, T90, T91, T92, T93, T94, T95, T96) - ULTRALEATHER
9	M05962-S7-TF0	EA	COVER/SEAT (T97, T98, T99, T00) - ULTRALEATHER

COPYRIGHT © 2006 WINNEBAGO INDUSTRIES INC.

CURTAIN & CUSHION GROUP (CONTINUED)

BUCKET SEATS (CONTINUED)

KEY	PART NUMBER	U/M	DESCRIPTION
10	148630-01-T89	EA	SKIRT - W/SEAT BELT SLOT (T89, T90, T91, T92)
10	148630-01-SC0	EA	SKIRT - W/SEAT BELT SLOT (T93, T94, T95, T96)
10	148630-01-T97	EA	SKIRT - W/SEAT BELT SLOT (T97, T98, T99, T00)
10	148630-15-TC4	EA	SKIRT - W/SEAT BELT SLOT (T89, T90, T91, T92, T93, T94, T95, T96) - ULTRALEATHER
10	148630-15-TB4	EA	SKIRT - W/SEAT BELT SLOT (T97, T98, T99, T00) - ULTRALEATHER
10	148630-03-T89	EA	SKIRT - F/6-WAY POWER (T89, T90, T91, T92) - 6-WAY POWER
10	148630-03-SC0	EA	SKIRT - F/6-WAY POWER (T93, T94, T95, T96) - 6-WAY POWER
10	148630-03-T97	EA	SKIRT - F/6-WAY POWER (T97, T98, T99, T00) - 6-WAY POWER
10	148630-16-TC4	EA	SKIRT - F/6-WAY POWER (T89, T90, T91, T92, T93, T94, T95, T96) - ULTRALEATHER, 6-WAY POWER
10	148630-16-TB4	EA	SKIRT - F/6-WAY POWER (T97, T98, T99, T00) - ULTRALEATHER, 6-WAY POWER
11	134532-01-000	EA	FRAME - SEAT/HIGH BACK
12*	122611-02-000	EA	LUMBAR - W/LEVER
13	117125-01-02B	EA	BRACKET - CABLE MOUNT - ADJUSTER W/LOCK
14	108049-02-000	EA	CLIP - CABLE/PEDESTAL
15	108049-04-000	EA	CABLE - W/MINI LEVER ACTION SWITCH - 28" SHEATH/30" CABLE
16	127159-01-02B	EA	BRACKET - SEAT RELEASE - SINGLE REMOTE - E-COATED - 6-WAY POWER
17	NOT USED		
18	NOT USED		
19	127159-02-02B	EA	BRACKET - SEAT RELEASE - DUAL REMOTE - E-COATED
20	128699-01-02B	EA	BRACKET - SEAT SWITCH - E-COATED - 6-WAY POWER
21	147457-01-02B	EA	BRACKET - ZEE W/HOLES - 2.8" - E-COATED
22	130802-02-000	EA	LEVER - RIGHT HAND
	130802-03-000	EA	SCREW F/LEVER
23	148668-01-01A	EA	CUP/TRIM COVER - F/LEVER - BLACK
24	NOT USED		
	152337-01-000	EA	PROTECTOR - SEAT - CLEAR VINYL

***COMPONENT PARTS LISTED LATER IN THIS GROUP**

COMPONENT PARTS FOR BUCKET SEATS

122611-02-000

KEY	PART NUMBER	U/M	DESCRIPTION	VENDOR NO.
	122611-02-701	EA	LUMBAR - LEVER	412
	122611-02-702	EA	LUMBAR MECHANISM	24395-FLEXSTEEL

COPYRIGHT © 2006 WINNEBAGO INDUSTRIES INC.

CURTAIN & CUSHION GROUP (CONTINUED)

LOUNGE CHAIR

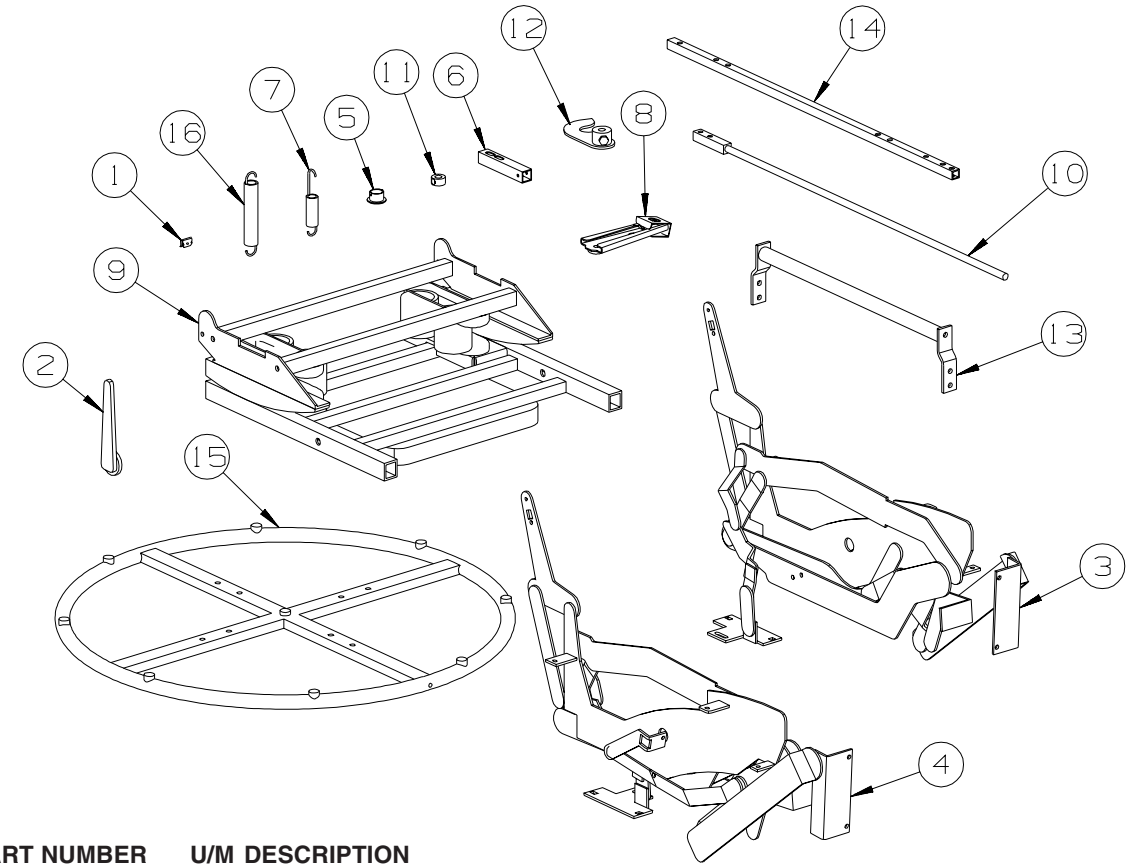

KEY	PART NUMBER	U/M	DESCRIPTION
	P42958-05-T89	EA	COVER/CHAIR - RECLINER - W/FOOTREST (T89, T90, T91, T92)
	P42958-06-T93	EA	COVER/CHAIR - RECLINER - W/FOOTREST (T93, T94, T95, T96)
	P42958-05-T97	EA	COVER/CHAIR - RECLINER - W/FOOTREST (T97, T98, T99, T00)
	P42958-07-TC4	EA	COVER/CHAIR - RECLINER - W/FOOTREST (T89, T90, T91, T92, T93, T94, T95, T96) - ULTRALEATHER
	P42958-07-TB4	EA	COVER/CHAIR - RECLINER - W/FOOTREST (T97, T98, T99, T00) - ULTRALEATHER
1	029134-01-000	EA	CLIP - FINISH - UPHOLSTERY
2	133126-11-000	EA	HANDLE/RECLINE - PLASTIC
3	154077-01-000	EA	RECLINER MECHANISM - RIGHT HAND (WHEN SITTING IN CHAIR)
4	154077-02-000	EA	RECLINER MECHANISM - LEFT HAND (WHEN SITTING IN CHAIR)
5	154077-03-000	EA	BUSHING - PLASTIC/WHITE
6	154077-04-000	EA	TUBE/HANDLE MOUNTING - 3.6" LONG - BLACK
7	154077-05-000	EA	SPRING - EXTENSION - 3.7"
8	154077-06-000	EA	SLEEVE/CLIP - 1.6" X 5.1"
9	154077-07-000	EA	BASE - SWIVEL/ROCKER - BLACK
10	154077-08-000	EA	LATCH ROD - 25.5" - BLACK
11	154077-09-000	EA	LOCK COLLAR - W/SET SCREW LOCK-OUT
12	154077-10-000	EA	LATCH BRACKET - RIGHT FRONT LOCK OUT - BLACK
13	154077-11-000	EA	LATCH TUBE - W/LOCK OUT ENDS - 15.1" - BLACK
14	154077-12-000	EA	LOCK TUBE - .5" X .5" X 23.5"
15	154077-13-000	EA	GRID RING - 24" - BLACK
16	154077-14-000	EA	SPRING/EXTENSION - 4.7"

COPYRIGHT © 2006 WINNEBAGO INDUSTRIES INC.

CURTAIN & CUSHION GROUP (CONTINUED)

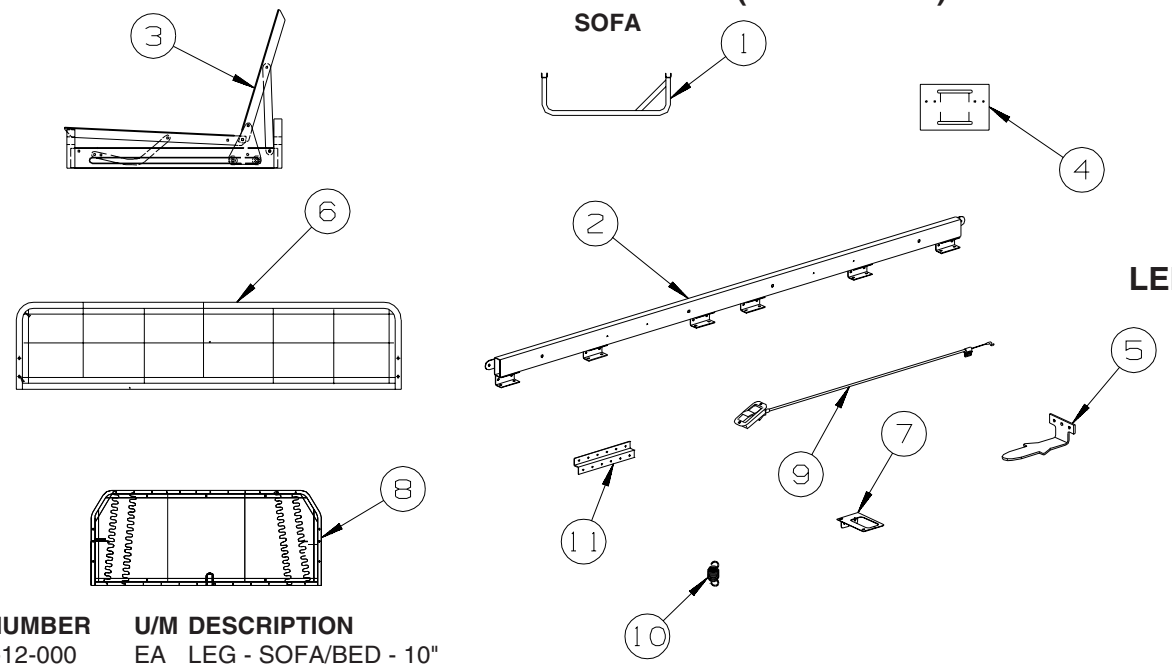

KEY	PART NUMBER	U/M	DESCRIPTION
1	127335-12-000	EA	LEG - SOFA/BED - 10"
2	151290-11-000	EA	BAR - FOOTREST FRAME - 68”
3	151290-21-000	EA	FRAME - BASE - 27.25" X 70"
	153655-01-T89	EA	ARMREST - RIGHT HAND - REMOVABLE (T89, T90, T91, T92)
	153655-01-T93	EA	ARMREST - RIGHT HAND - REMOVABLE (T93, T94, T95, T96)
	153655-01-T97	EA	ARMREST - RIGHT HAND - REMOVABLE (T97, T98, T99, T00)
	P53655-01-T89	EA	COVER - ARMREST - REMOVEABLE/RIGHT HAND (T89, T90, T91, T92)
	P53655-01-T93	EA	COVER - ARMREST - REMOVEABLE/RIGHT HAND (T93, T94, T95, T96)
	P53655-01-T97	EA	COVER - ARMREST - REMOVEABLE/RIGHT HAND (T97, T98, T99, T00)
4	127335-08-000	EA	BRACKET - REMOVABLE ARMREST/SOFA
5	127335-09-000	EA	BRACKET - REMOVABLE ARMREST/CUSHION
	153655-02-T89	EA	ARMREST - LEFT HAND - REMOVABLE (T89, T90, T91, T92)
	153655-02-T93	EA	ARMREST - LEFT HAND - REMOVABLE (T93, T94, T95, T96)
	153655-02-T97	EA	ARMREST - LEFT HAND - REMOVABLE (T97, T98, T99, T00)
	P53655-02-T89	EA	COVER - ARMREST - REMOVEABLE/LEFT HAND (T89, T90, T91, T92)
	P53655-02-T93	EA	COVER - ARMREST - REMOVEABLE/LEFT HAND (T93, T94, T95, T96)
	P53655-02-T97	EA	COVER - ARMREST - REMOVEABLE/LEFT HAND (T97, T98, T99, T00)
	153795-01-T89	EA	PANEL - COUCH/RIGHT HAND - FABRIC COVERED (T89, T90, T91, T92)
	153795-01-T93	EA	PANEL - COUCH/RIGHT HAND - FABRIC COVERED (T93, T94, T95, T96)
	153795-01-T97	EA	PANEL - COUCH/RIGHT HAND - FABRIC COVERED (T97, T98, T99, T00)
	153795-02-T89	EA	PANEL - COUCH/LEFT HAND - FABRIC COVERED (T89, T90, T91, T92)
	153795-02-T93	EA	PANEL - COUCH/LEFT HAND - FABRIC COVERED (T93, T94, T95, T96)
	153795-02-T97	EA	PANEL - COUCH/LEFT HAND - FABRIC COVERED (T97, T98, T99, T00)
	154309-03-T89	EA	PANEL - FRONT KICK - SOFA - CENTER/LOWER - 22" (T89, T90, T91, T92)
	154309-03-T93	EA	PANEL - FRONT KICK - SOFA - CENTER/LOWER - 22" (T93, T94, T95, T96)
	154309-03-T97	EA	PANEL - FRONT KICK - SOFA - CENTER/LOWER - 22" (T97, T98, T99, T00)
	154309-04-T89	EA	FOOTREST - SOFA/RH FRONT - 11" X 24" (T89, T90, T91, T92)
	154309-04-T93	EA	FOOTREST - SOFA/RH FRONT - 11" X 24" (T93, T94, T95, T96)
	154309-04-T97	EA	FOOTREST - SOFA/RH FRONT - 11" X 24" (T97, T98, T99, T00)
6	132870-01-000	EA	FRAME/BACK - 70" - CUSTOM LOUNGE
	154509-03-T89	EA	SEAT - SOFA - 70" (T89, T90, T91, T92)
	154509-03-T93	EA	SEAT - SOFA - 70" (T93, T94, T95, T96)
	154509-03-T97	EA	SEAT - SOFA - 70" (T97, T98, T99, T00)
	P54509-03-T89	EA	COVER/SEAT - SOFA - 70" (T89, T90, T91, T92)
	P54509-03-T93	EA	COVER/SEAT - SOFA - 70" (T93, T94, T95, T96)
	P54509-03-T97	EA	COVER/SEAT - SOFA - 70" (T97, T98, T99, T00)

COPYRIGHT © 2006 WINNEBAGO INDUSTRIES INC.

CURTAIN & CUSHION GROUP (CONTINUED)

SOFA (CONTINUED)

KEY	PART NUMBER	U/M	DESCRIPTION
7	127159-03-02B	EA	BRACKET - SEAT RELEASE - REMOTE - E-COATED
8	151290-06-000	EA	FRAME - SEAT - 70"
9	153956-02-01A	EA	CABLE - FOOTREST - W/BLACK HANDLE
	154309-05-T89	EA	FOOTREST - SOFA/LH FRONT - 11" X 24" (T89, T90, T91, T92)
	154309-05-T93	EA	FOOTREST - SOFA/LH FRONT - 11" X 24" (T93, T94, T95, T96)
	154309-05-T97	EA	FOOTREST - SOFA/LH FRONT - 11" X 24" (T97, T98, T99, T00)
	154509-02-T89	EA	BACK - SOFA - 70" (T89, T90, T91, T92)
	154509-02-T93	EA	BACK - SOFA - 70" (T93, T94, T95, T96)
	154509-02-T97	EA	BACK - SOFA - 70" (T97, T98, T99, T00)
	P54509-02-T89	EA	COVER/BACK - SOFA - 70" (T89, T90, T91, T92)
	P54509-02-T93	EA	COVER/BACK - SOFA - 70" (T93, T94, T95, T96)
	P54509-02-T97	EA	COVER/BACK - SOFA - 70" (T97, T98, T99, T00)
10	154190-06-000	EA	SPRING/FOOTREST - 2.8"
11	155422-01-01A	EA	BRACKET/COUCH - Z - BLACK

COPYRIGHT © 2006 WINNEBAGO INDUSTRIES INC.

CURTAIN & CUSHION GROUP (CONTINUED)

SOFA (CONTINUED)

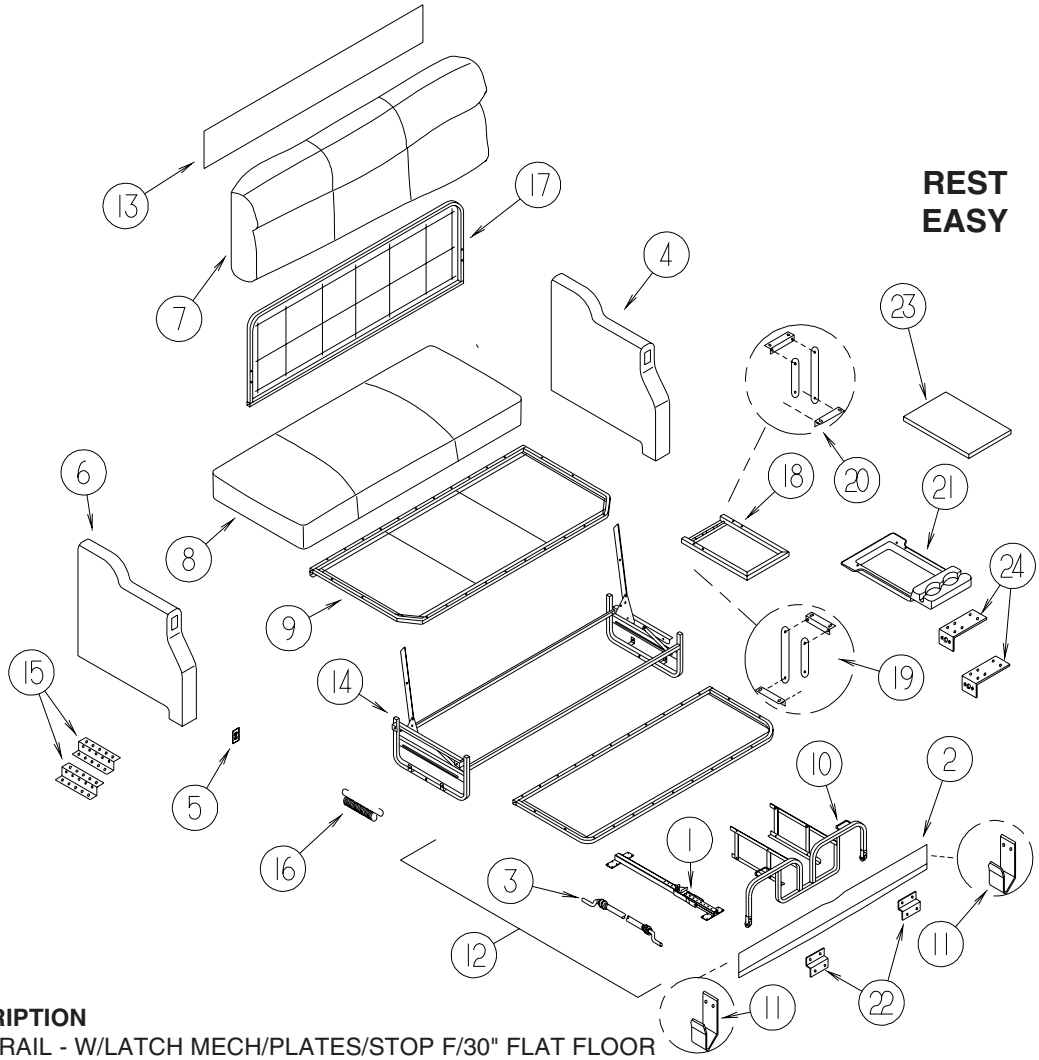

KEY	PART NUMBER	U/M	DESCRIPTION
1*	148226-01-000	EA	SLIDE RAIL - W/LATCH MECH/PLATES/STOP F/30" FLAT FLOOR
2	150679-07-T89	EA	PANEL/FRONT KICK - SOFA/SLEEPER - 70" - FABRIC COVERED (T89, T90, T91, T92)
2	150679-07-SC0	EA	PANEL/FRONT KICK - SOFA/SLEEPER - 70" - FABRIC COVERED (T93, T94, T95, T96)
2	150679-07-T97	EA	PANEL/FRONT KICK - SOFA/SLEEPER - 70" - FABRIC COVERED (T97, T98, T99, T00)
2	150679-08-SC0	EA	PANEL/FRONT KICK - SOFA/SLEEPER - 70" (T89, T90, T91, T92, T93, T94, T95, T96) - ULTRALEATHER
2	150679-08-SB4	EA	PANEL/FRONT KICK - SOFA/SLEEPER - 70" (T97, T98, T99, T00) - ULTRALEATHER
3	148225-01-000	EA	CABLE ONLY - REMOTE - 31.9" W/Z-ENDS
4	149886-02-T89	EA	ARMREST - LEFT HAND (T89, T90, T91, T92)
4	149886-02-SC0	EA	ARMREST - LEFT HAND (T93, T94, T95, T96)
4	149886-02-T97	EA	ARMREST - LEFT HAND (T97, T98, T99, T00)
4	149886-04-S76	EA	ARMREST - LEFT HAND (T89, T90, T91, T92, T93, T94, T95, T96) - ULTRALEATHER
4	149886-04-S80	EA	ARMREST - LEFT HAND (T97, T98, T99, T00) - ULTRALEATHER
	P49886-02-T89	EA	COVER/ARMREST - LEFT (T89, T90, T91, T92)
	P49886-02-SC0	EA	COVER/ARMREST - LEFT (T93, T94, T95, T96)
	P49886-02-T97	EA	COVER/ARMREST - LEFT (T97, T98, T99, T00)
	P49886-04-S76	EA	COVER/ARMREST - LEFT (T89, T90, T91, T92, T93, T94, T95, T96) - ULTRALEATHER
	P49886-04-S80	EA	COVER/ARMREST - LEFT (T97, T98, T99, T00) - ULTRALEATHER
5	136118-01-000	EA	SWITCH - SOFA/RECLINER
6	149886-01-T89	EA	ARMREST - RIGHT HAND (T89, T90, T91, T92)
6	149886-01-SC0	EA	ARMREST - RIGHT HAND (T93, T94, T95, T96)
6	149886-01-T97	EA	ARMREST - RIGHT HAND (T97, T98, T99, T00)
6	149886-03-S76	EA	ARMREST - RIGHT HAND - W/SWITCH (T89, T90, T91, T92, T93, T94, T95, T96) - ULTRALEATHER
6	149886-03-S80	EA	ARMREST - RIGHT HAND - W/SWITCH (T97, T98, T99, T00) - ULTRALEATHER
	P49886-01-T89	EA	COVER/ARMREST - RIGHT (T89, T90, T91, T92)
	P49886-01-SC0	EA	COVER/ARMREST - RIGHT (T93, T94, T95, T96)
	P49886-01-T97	EA	COVER/ARMREST - RIGHT (T97, T98, T99, T00)
	P49886-03-S76	EA	COVER/ARMREST - RIGHT (T89, T90, T91, T92, T93, T94, T95, T96) - ULTRALEATHER
	P49886-03-S80	EA	COVER/ARMREST - RIGHT (T97, T98, T99, T00) - ULTRALEATHER

COPYRIGHT © 2006 WINNEBAGO INDUSTRIES INC.

CURTAIN & CUSHION GROUP (CONTINUED)

SOFA (CONTINUED)

KEY	PART NUMBER	U/M	DESCRIPTION
7	150679-02-T89	EA	BACK - SOFA/SLEEPER (T89, T90, T91, T92)
7	150679-02-SC0	EA	BACK - SOFA/SLEEPER (T93, T94, T95, T96)
7	150679-02-T97	EA	BACK - SOFA/SLEEPER (T97, T98, T99, T00)
7	150679-05-SC0	EA	BACK - SOFA/SLEEPER (T89, T90, T91, T92, T93, T94, T95, T96) - ULTRALEATHER
7	150679-05-SB4	EA	BACK - SOFA/SLEEPER (T97, T98, T99, T00) - ULTRALEATHER
	P50679-02-T89	EA	COVER/BACK - SOFA/SLEEPER REST EASY (T89, T90, T91, T92)
	P50679-02-SC0	EA	COVER/BACK - SOFA/SLEEPER REST EASY (T93, T94, T95, T96)
	P50679-02-T97	EA	COVER/BACK - SOFA/SLEEPER REST EASY (T97, T98, T99, T00)
	P50679-05-SC0	EA	COVER/BACK - SOFA/SLEEPER REST EASY (T89, T90, T91, T92, T93, T94, T95, T96) - ULTRALEATHER
	P50679-05-SB4	EA	COVER/BACK - SOFA/SLEEPER REST EASY (T97, T98, T99, T00) - ULTRALEATHER
8	150679-03-T89	EA	SEAT - SOFA/SLEEPER REST EASY (T89, T90, T91, T92)
8	150679-03-SC0	EA	SEAT - SOFA/SLEEPER REST EASY (T93, T94, T95, T96)
8	150679-03-T97	EA	SEAT - SOFA/SLEEPER REST EASY (T97, T98, T99, T00)
8	150679-06-SC0	EA	SEAT - SOFA/SLEEPER (T89, T90, T91, T92, T93, T94, T95, T96) - ULTRALEATHER
8	150679-06-SB4	EA	SEAT - SOFA/SLEEPER (T97, T98, T99, T00) - ULTRALEATHER
	P50679-03-T89	EA	COVER/SEAT - SOFA/SLEEPER REST EASY (T89, T90, T91, T92)
	P50679-03-SC0	EA	COVER/SEAT - SOFA/SLEEPER REST EASY (T93, T94, T95, T96)
	P50679-03-T97	EA	COVER/SEAT - SOFA/SLEEPER REST EASY (T97, T98, T99, T00)
	P50679-06-SC0	EA	COVER/SEAT - SOFA/SLEEPER REST EASY (T89, T90, T91, T92, T93, T94, T95, T96) - ULTRALEATHER
	P50679-06-SB4	EA	COVER/SEAT - SOFA/SLEEPER REST EASY (T97, T98, T99, T00) - ULTRALEATHER
9	151290-06-000	EA	FRAME - SEAT - 70"
10	136534-27-000	EA	TRUNDLE FRAME - 26" WIDE/DUAL - W/LINKAGE, LATCH & HANDLE
11	NOT USED		
12	149844-04-T89	EA	TRUNDLE - SOFA/SLEEPER REST EASY - 70" (T89, T90, T91, T92)
12	149844-04-SC0	EA	TRUNDLE - SOFA/SLEEPER REST EASY - 70" (T93, T94, T95, T96)
12	149844-04-T97	EA	TRUNDLE - SOFA/SLEEPER REST EASY - 70" (T97, T98, T99, T00)
12	149844-09-SC0	EA	TRUNDLE - SOFA/SLEEPER REST EASY-70" (T89, T90, T91, T92, T93, T94, T95, T96) - ULTRALEATHER
12	149844-09-SB4	EA	TRUNDLE - SOFA/SLEEPER REST EASY - 70" (T97, T98, T99, T00) - ULTRALEATHER
	P49844-04-T89	EA	COVER/TRUNDLE - SOFA/SLEEPER REST EASY (T89, T90, T91, T92)
	P49844-04-SC0	EA	COVER/TRUNDLE - SOFA/SLEEPER REST EASY (T93, T94, T95, T96)
	P49844-04-T97	EA	COVER/TRUNDLE - SOFA/SLEEPER REST EASY (T97, T98, T99, T00)
	P49844-09-SC0	EA	COVER/TRUNDLE - SOFA/SLEEPER (T89, T90, T91, T92, T93, T94, T95, T96) - ULTRALEATHER
	P49844-09-SB4	EA	COVER/TRUNDLE - SOFA/SLEEPER (T97, T98, T99, T00) - ULTRALEATHER
13	NOT USED		
14	151290-01-000	EA	FRAME - BASE - 70"
15	NOT USED		
16	NOT USED		
17	132870-01-000	EA	FRAME/BACK - 70" - CUSTOM LOUNGE
18	NOT USED		
19	NOT USED		
20	NOT USED		
21	NOT USED		
22	101926-01-02A	EA	BRACKET - ZEE - 2" - BLACK
23	NOT USED		
24	NOT USED		

***COMPONENT PARTS LISTED LATER IN THIS GROUP**

COPYRIGHT © 2006 WINNEBAGO INDUSTRIES INC.

CURTAIN & CUSHION GROUP (CONTINUED)

SOFA (CONTINUED)

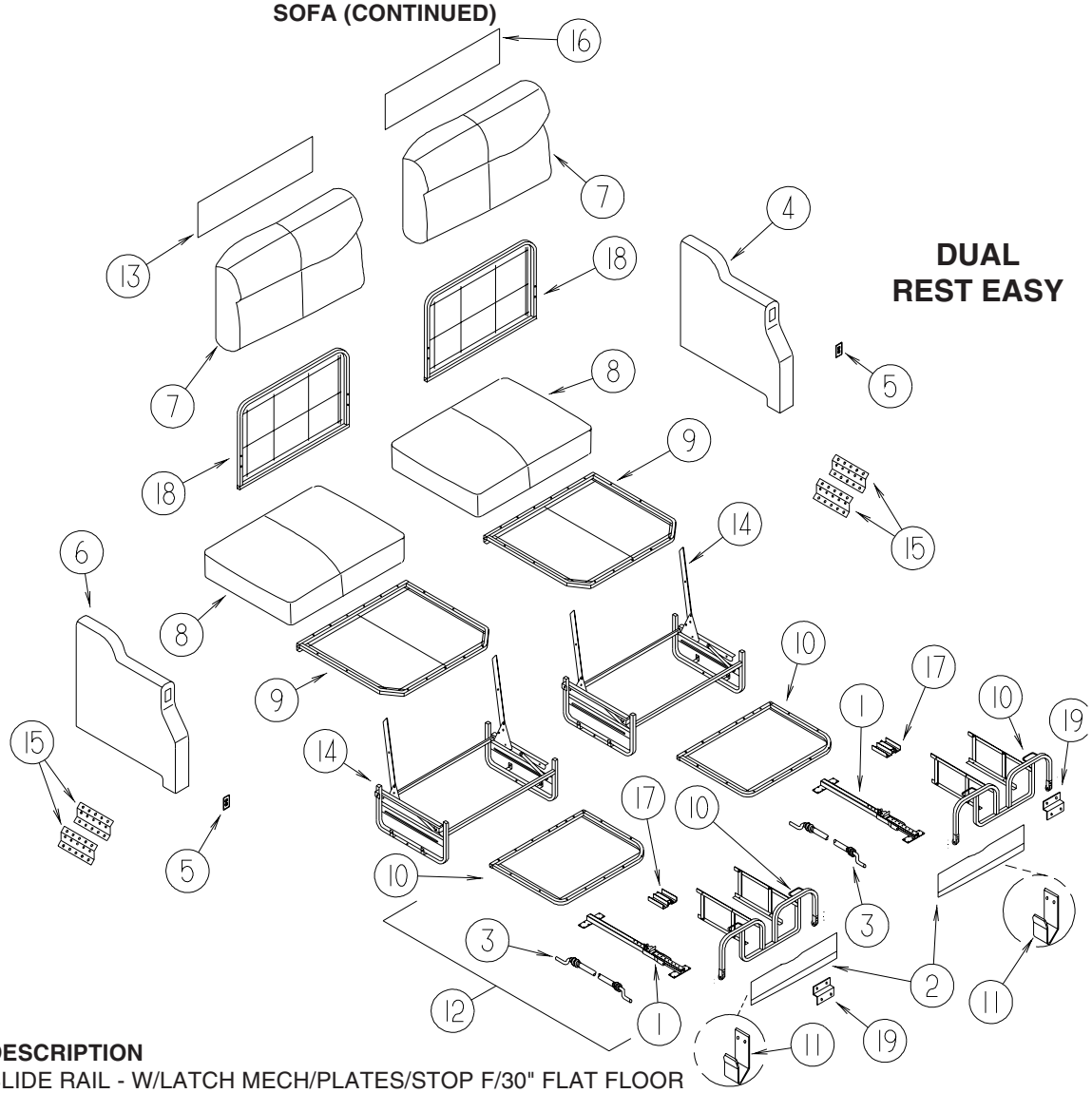

KEY	PART NUMBER	U/M	DESCRIPTION
1*	148226-01-000	EA	SLIDE RAIL - W/LATCH MECH/PLATES/STOP F/30" FLAT FLOOR
2	150480-04-T89	EA	PANEL/FRONT KICK - SOFA/SLEEPER REST EASY-DUAL CONTROLS (T89, T90, T91, T92)
2	150480-04-SC0	EA	PANEL/FRONT KICK - SOFA/SLEEPER REST EASY-DUAL CONTROLS (T93, T94, T95, T96)
2	150480-04-T97	EA	PANEL/FRONT KICK - SOFA/SLEEPER REST EASY-DUAL CONTROLS (T97, T98, T99, T00)
2	150480-08-S76	EA	PANEL/FRONT KICK - SOFA/SLPR - DUAL (T89, T90, T91, T92, T93, T94, T95, T96) - ULTRALEATHER
2	150480-08-S80	EA	PANEL/FRONT KICK - SOFA/SLEEPER - DUAL (T97, T98, T99, T00) - ULTRALEATHER
3	148225-01-000	EA	CABLE ONLY - REMOTE - 31.9" W/Z-ENDS
4	138644-24-T89	EA	ARMREST - LEFT HAND (T89, T90, T91, T92)
4	138644-24-SC0	EA	ARMREST - LEFT HAND (T93, T94, T95, T96)
4	138644-24-T97	EA	ARMREST - LEFT HAND (T97, T98, T99, T00)
4	138644-22-S76	EA	ARMREST - LEFT HAND - W/SWITCH (T89, T90, T91, T92, T93, T94, T95, T96) - ULTRALEATHER
4	138644-22-S80	EA	ARMREST - LEFT HAND - W/SWITCH (T97, T98, T99, T00) - ULTRALEATHER
	P38644-07-T89	EA	COVER/ARMREST - LEFT HAND (T89, T90, T91, T92)
	P38644-07-SC0	EA	COVER/ARMREST - LEFT HAND (T93, T94, T95, T96)
	P38644-07-T97	EA	COVER/ARMREST - LEFT HAND (T97, T98, T99, T00)
	P38644-22-S76	EA	COVER/ARMREST - LEFT HAND (T89, T90, T91, T92, T93, T94, T95, T96) - ULTRALEATHER
	P38644-22-S80	EA	COVER/ARMREST - LEFT HAND (T97, T98, T99, T00) - ULTRALEATHER
5	136118-01-000	EA	SWITCH - SOFA/RECLINER
6	138644-23-T89	EA	ARMREST - RIGHT HAND (T89, T90, T91, T92)
6	138644-23-SC0	EA	ARMREST - RIGHT HAND (T93, T94, T95, T96)
6	138644-23-T97	EA	ARMREST - RIGHT HAND (T97, T98, T99, T00)
6	138644-21-S76	EA	ARMREST - RIGHT HAND - W/SWITCH (T89, T90, T91, T92, T93, T94, T95, T96) - ULTRALEATHER
6	138644-21-S80	EA	ARMREST - RIGHT HAND - W/SWITCH (T97, T98, T99, T00) - ULTRALEATHER
	P38644-06-T89	EA	COVER/ARMREST - RIGHT HAND (T89, T90, T91, T92)
	P38644-06-SC0	EA	COVER/ARMREST - RIGHT HAND (T93, T94, T95, T96)
	P38644-06-T97	EA	COVER/ARMREST - RIGHT HAND (T97, T98, T99, T00)
	P38644-21-S76	EA	COVER/ARMREST - RIGHT HAND (T89, T90, T91, T92, T93, T94, T95, T96) - ULTRALEATHER
	P38644-21-S80	EA	COVER/ARMREST - RIGHT HAND (T97, T98, T99, T00) - ULTRALEATHER

COPYRIGHT © 2006 WINNEBAGO INDUSTRIES INC.

CURTAIN & CUSHION GROUP (CONTINUED)

SOFA (CONTINUED)

KEY	PART NUMBER	U/M	DESCRIPTION
7	150480-02-T89	EA	BACK - SOFA/SLEEPER REST EASY-DUAL CONTROLS (T89, T90, T91, T92)
7	150480-02-SC0	EA	BACK - SOFA/SLEEPER REST EASY-DUAL CONTROLS (T93, T94, T95, T96)
7	150480-02-T97	EA	BACK - SOFA/SLEEPER REST EASY-DUAL CONTROLS (T97, T98, T99, T00)
7	150480-06-S76	EA	BACK - SOFA/SLEEPER REST EASY-DUAL (T89, T90, T91, T92, T93, T94, T95, T96) - ULTRALEATHER
7	150480-06-S80	EA	BACK - SOFA/SLEEPER REST EASY-DUAL CONTROLS (T97, T98, T99, T00) - ULTRALEATHER
	P50480-02-T89	EA	COVER/BACK - DUAL (T89, T90, T91, T92)
	P50480-02-SC0	EA	COVER/BACK - DUAL (T93, T94, T95, T96)
	P50480-02-T97	EA	COVER/BACK - DUAL (T97, T98, T99, T00)
	P50480-06-S76	EA	COVER/BACK - DUAL (T89, T90, T91, T92, T93, T94, T95, T96) - ULTRALEATHER
	P50480-06-S80	EA	COVER/BACK - DUAL (T97, T98, T99, T00) - ULTRALEATHER
8	150480-03-T89	EA	SEAT - SOFA/SLEEPER REST EASY-DUAL CONTROLS (T89, T90, T91, T92)
8	150480-03-SC0	EA	SEAT - SOFA/SLEEPER REST EASY-DUAL CONTROLS (T93, T94, T95, T96)
8	150480-03-T97	EA	SEAT - SOFA/SLEEPER REST EASY-DUAL CONTROLS (T97, T98, T99, T00)
8	150480-07-S76	EA	SEAT - SOFA/SLEEPER REST EASY-DUAL (T89, T90, T91, T92, T93, T94, T95, T96) - ULTRALEATHER
8	150480-07-S80	EA	SEAT - SOFA/SLEEPER REST EASY-DUAL CONTROLS (T97, T98, T99, T00) - ULTRALEATHER
	P50480-03-T89	EA	COVER/SEAT - DUAL (T89, T90, T91, T92)
	P50480-03-SC0	EA	COVER/SEAT - DUAL (T93, T94, T95, T96)
	P50480-03-T97	EA	COVER/SEAT - DUAL (T97, T98, T99, T00)
	P50480-07-S76	EA	COVER/SEAT - DUAL (T89, T90, T91, T92, T93, T94, T95, T96) - ULTRALEATHER
	P50480-07-S80	EA	COVER/SEAT - DUAL (T97, T98, T99, T00) - ULTRALEATHER
9	151290-02-000	EA	FRAME - SEAT - 30"
10	136534-27-000	EA	TRUNDLE FRAME - 26" WIDE/DUAL - W/LINKAGE, LATCH & HANDLE
11	121906-01-02B	EA	BRACKET - KICKBOARD - E-COATED
12	138647-22-T89	EA	TRUNDLE - SOFA/SLEEPER - REST EASY/DUAL CONTROLLED (T89, T90, T91, T92)
12	138647-22-SC0	EA	TRUNDLE - SOFA/SLEEPER - REST EASY/DUAL CONTROLLED (T93, T94, T95, T96)
12	138647-22-T97	EA	TRUNDLE - SOFA/SLEEPER - REST EASY/DUAL CONTROLLED (T97, T98, T99, T00)
12	138647-04-S76	EA	TRUNDLE - SOFA/SLEEPER - DUAL (T89, T90, T91, T92, T93, T94, T95, T96) - ULTRALEATHER
12	138647-04-S80	EA	TRUNDLE - SOFA/SLEEPER - DUAL CONTROLLED (T97, T98, T99, T00) - ULTRALEATHER
	P38647-22-T89	EA	COVER/TRUNDLE - REST EASY/DUAL CONTROLLED - SOFA/SLEEPER (T89, T90, T91, T92)
	P38647-22-SC0	EA	COVER/TRUNDLE - REST EASY/DUAL CONTROLLED - SOFA/SLEEPER (T93, T94, T95, T96)
	P38647-22-T97	EA	COVER/TRUNDLE - REST EASY/DUAL CONTROLLED - SOFA/SLEEPER (T97, T98, T99, T00)
	P38647-04-S76	EA	COVER/TRUNDLE - SOFA/SLEEPER - DUAL (T89, T90, T91, T92, T93, T94, T95, T96) - ULTRALEATHER
	P38647-04-S80	EA	COVER/TRUNDLE - SOFA/SLEEPER - DUAL (T97, T98, T99, T00) - ULTRALEATHER
13	139716-16-T89	EA	SIGHT SHIELD - DUAL BACK/RIGHT HAND (T89, T90, T91, T92)
13	139716-16-SC0	EA	SIGHT SHIELD - DUAL BACK/RIGHT HAND (T93, T94, T95, T96)
13	139716-16-T97	EA	SIGHT SHIELD - DUAL BACK/RIGHT HAND (T97, T98, T99, T00)
13	139716-14-SE4	EA	SIGHT SHIELD - DUAL BACK/RIGHT HAND (T89, T90, T91, T92, T93, T94, T95, T96) - ULTRALEATHER
13	139716-14-SF0	EA	SIGHT SHIELD - DUAL BACK/RIGHT HAND (T97, T98, T99, T00) - ULTRALEATHER
14	151290-14-000	EA	FRAME - BASE - 27.25" X 30" X 10.5" - LEFT
14	151290-15-000	EA	FRAME - BASE - 27.25" X 30" X 10.5" - RIGHT
15	NOT USED		
16	139716-15-T89	EA	SIGHT SHIELD - DUAL BACK/LEFT HAND (T89, T90, T91, T92)
16	139716-15-SC0	EA	SIGHT SHIELD - DUAL BACK/LEFT HAND (T93, T94, T95, T96)
16	139716-15-T97	EA	SIGHT SHIELD - DUAL BACK/LEFT HAND (T97, T98, T99, T00)
16	139716-13-SE4	EA	SIGHT SHIELD - DUAL BACK/LEFT HAND (T89, T90, T91, T92, T93, T94, T95, T96) - ULTRALEATHER
16	139716-13-SF0	EA	SIGHT SHIELD - DUAL BACK/LEFT HAND (T97, T98, T99, T00) - ULTRALEATHER
17	136534-32-000	EA	BRACKET - DUAL BASE
18	136534-25-000	EA	FRAME/BACK - FOR DUAL REST EASY SOFA - ONE SIDE ONLY
19	101926-01-02A	EA	BRACKET - ZEE - 2" - BLACK

***COMPONENT PARTS LISTED LATER IN THIS GROUP**

COMPONENT PARTS FOR SOFA

148226-01-000, 148226-02-000, 148226-03-000

KEY	PART NUMBER	U/M	DESCRIPTION	VENDOR NO.
	148226-01-700	EA	BUSHING/GUIDE - F/MECHANISM	9TN-SLD-GR-1
	148226-01-701	EA	SLIDE MECHANISM ASM W/LATCH	PTN-SLD-BUSH1

COPYRIGHT © 2006 WINNEBAGO INDUSTRIES INC.

CURTAIN & CUSHION GROUP (CONTINUED)

WINDOW TREATMENT

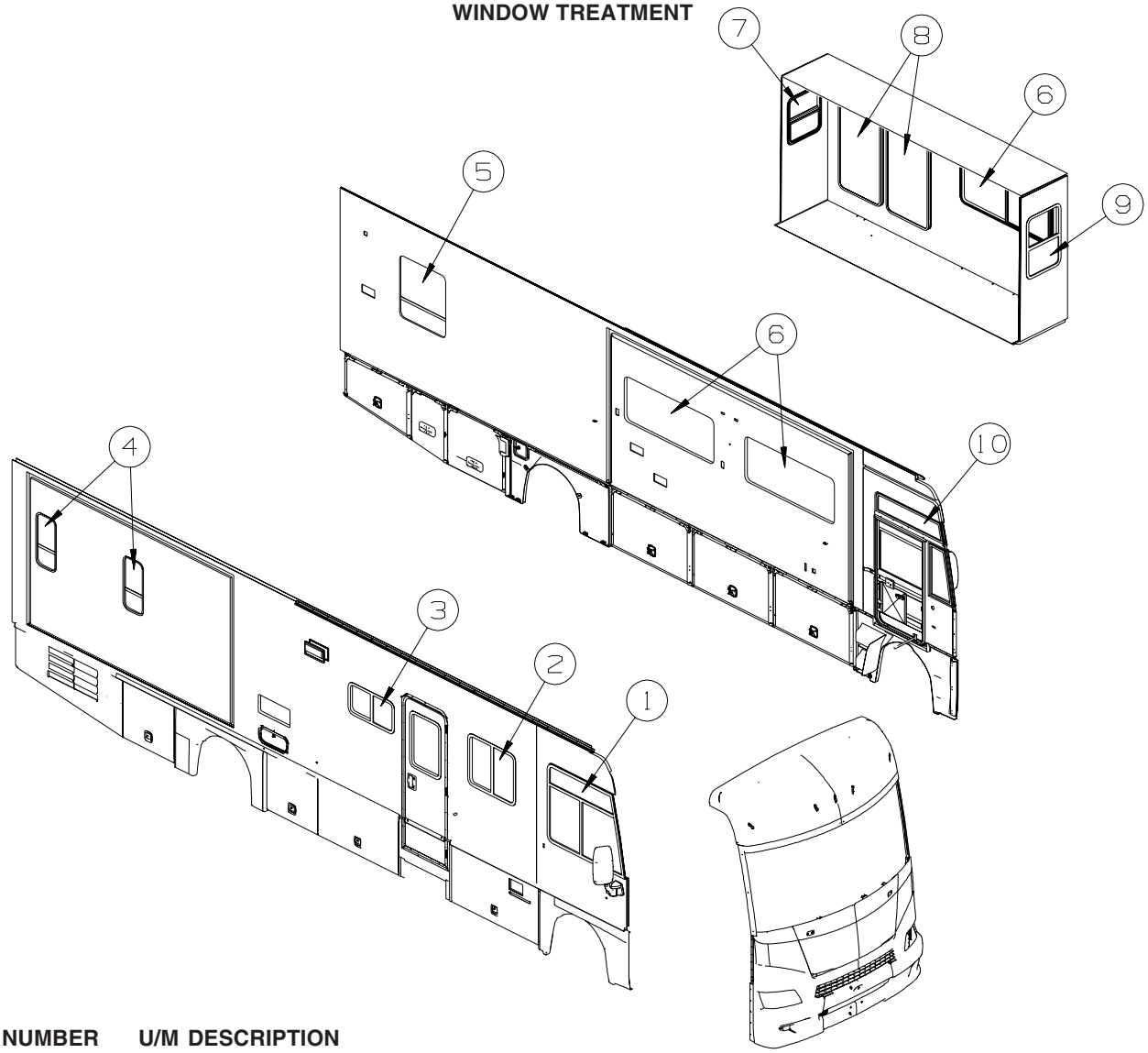

KEY	PART NUMBER	U/M	DESCRIPTION
1	147460-04-T77	EA	CURTAIN - DRVR/WRAP/PRIVACY/PLEATED - 42.5" X 146.8"
2	146058-72-T89	EA	LAMBREQUIN - MONTICELLO - 33" X 31" (T89,T90,T91,T92)
2	146058-72-T93	EA	LAMBREQUIN - MONTICELLO - 33" X 31" (T93,T94,T95,T96)
2	146058-72-T97	EA	LAMBREQUIN - MONTICELLO - 33" X 31" (T97,T98,T99,T00)
2	140789-89-T77	EA	BLIND - DAY/NIGHTER - 30" X 33"
3	143828-07-S64	EA	TRIM - WINDOW - WOOD/RH - 18.2" - PORTSMOUTH OAK FROM: 00-00-00 THRU: 07-30-05
3	143828-07-S65	EA	TRIM - WINDOW - WOOD/RH - 18.2" - CONCERT CHERRY FROM: 00-00-00 THRU: 07-30-05
3	143828-07-S66	EA	TRIM - WINDOW - WOOD/RH - 18.2" - WASHED MAPLE FROM: 00-00-00 THRU: 07-30-05
3	143828-07-S67	EA	TRIM - WINDOW - WOOD/RH - 18.2" - SIERRA MAPLE FROM: 00-00-00 THRU: 07-30-05
3	143828-08-S64	EA	TRIM - WINDOW - WOOD/LH - 18.2" - PORTSMOUTH OAK FROM: 00-00-00 THRU: 07-30-05
3	143828-08-S65	EA	TRIM - WINDOW - WOOD/LH - 18.2" - CONCERT CHERRY FROM: 00-00-00 THRU: 07-30-05
3	143828-08-S66	EA	TRIM - WINDOW - WOOD/LH - 18.2" - WASHED MAPLE FROM: 00-00-00 THRU: 07-30-05
3	143828-08-S67	EA	TRIM - WINDOW - WOOD/LH - 18.2" - SIERRA MAPLE FROM: 00-00-00 THRU: 07-30-05
3	109041-44-02A	EA	BLIND - 30.5" X 18"
4	142437-14-T89	EA	VALANCE - ASHWELL - 15.5" (T89,T90,T91,T92)
4	142437-14-T93	EA	VALANCE - ASHWELL - 15.5" (T93,T94,T95,T96)
4	142437-14-T97	EA	VALANCE - ASHWELL - 15.5" (T97,T98,T99,T00)
4	140789-51-T89	EA	BLIND - DAY/NIGHTER - 14.5" X 32"

COPYRIGHT © 2006 WINNEBAGO INDUSTRIES INC.

CURTAIN & CUSHION GROUP (CONTINUED)

WINDOW TREATMENT (CONTINUED)

KEY	PART NUMBER	U/M	DESCRIPTION
5	NOT USED		
6	146058-42-T89	EA	LAMBREQUIN - MONTICELLO - 61" X 28" (T89,T90,T91,T92)
6	146058-42-T93	EA	LAMBREQUIN - MONTICELLO - 61" X 28" (T93,T94,T95,T96)
6	146058-42-T97	EA	LAMBREQUIN - MONTICELLO - 61" X 28" (T97,T98,T99,T00)
6	140789-69-T77	EA	BLIND - DAY/NIGHTER - 59" X 30"
7	153643-18-T89	EA	VALANCE - MODERATE - 27" X 14" (T89,T90,T91,T92)
7	153643-18-T93	EA	VALANCE - MODERATE - 27" X 14" (T93,T94,T95,T96)
7	153643-18-T97	EA	VALANCE - MODERATE - 27" X 14" (T97,T98,T99,T00)
7	146058-61-T89	EA	VALANCE - MONTICELLO - 27.5" (T89,T90,T91,T92) - DINING TABLE/CHAIRS
7	146058-61-T93	EA	VALANCE - MONTICELLO - 27.5" (T93,T94,T95,T96) - DINING TABLE/CHAIRS
7	146058-61-T97	EA	VALANCE - MONTICELLO - 27.5" (T97,T98,T99,T00) - DINING TABLE/CHAIRS
7	152664-B0-T89	EA	LEG - RIGHT - 29" (T89,T90,T91,T92)
7	152664-B0-T93	EA	LEG - RIGHT - 29" (T93,T94,T95,T96)
7	152664-B0-T97	EA	LEG - RIGHT - 29" (T97,T98,T99,T00)
7	152664-69-T89	EA	LEG - RIGHT - 57" (T89,T90,T91,T92) - DINING TABLE/CHAIRS
7	152664-69-T93	EA	LEG - RIGHT - 57" (T93,T94,T95,T96) - DINING TABLE/CHAIRS
7	152664-69-T97	EA	LEG - RIGHT - 57" (T97,T98,T99,T00) - DINING TABLE/CHAIRS
7	152664-B1-T89	EA	LEG - LEFT - 29" (T89,T90,T91,T92)
7	152664-B1-T93	EA	LEG - LEFT - 29" (T93,T94,T95,T96)
7	152664-B1-T97	EA	LEG - LEFT - 29" (T97,T98,T99,T00)
7	152664-70-T89	EA	LEG - LEFT - 57" (T89,T90,T91,T92) - DINING TABLE/CHAIRS
7	152664-70-T93	EA	LEG - LEFT - 57" (T93,T94,T95,T96) - DINING TABLE/CHAIRS
7	152664-70-T97	EA	LEG - LEFT - 57" (T97,T98,T99,T00) - DINING TABLE/CHAIRS
7	140789-79-T77	EA	BLIND - DAY/NIGHTER - 23" X 29"
7	140789-46-S64	EA	BLIND - DAY/NIGHTER - 23.5" X 61" - DINING TABLE/CHAIRS
8	146058-44-T89	EA	VALANCE - MONTICELLO - 62" (T89,T90,T91,T92) - DINING TABLE/CHAIRS
8	146058-44-T93	EA	VALANCE - MONTICELLO - 62" (T93,T94,T95,T96) - DINING TABLE/CHAIRS
8	146058-44-T97	EA	VALANCE - MONTICELLO - 62" (T97,T98,T99,T00) - DINING TABLE/CHAIRS
8	152445-43-T89	EA	LEG - RIGHT - 57" (T89,T90,T91,T92) - DINING TABLE/CHAIRS
8	152445-43-T93	EA	LEG - RIGHT - 57" (T93,T94,T95,T96) - DINING TABLE/CHAIRS
8	152445-43-T97	EA	LEG - RIGHT - 57" (T97,T98,T99,T00) - DINING TABLE/CHAIRS
8	152445-44-T89	EA	LEG - LEFT - 57" (T89,T90,T91,T92) - DINING TABLE/CHAIRS
8	152445-44-T93	EA	LEG - LEFT - 57" (T93,T94,T95,T96) - DINING TABLE/CHAIRS
8	152445-44-T97	EA	LEG - LEFT - 57" (T97,T98,T99,T00) - DINING TABLE/CHAIRS
8	155514-12-T89	EA	LEG - CENTER - 57" (T89,T90,T91,T92) - DINING TABLE/CHAIRS
8	155514-12-T93	EA	LEG - CENTER - 57" (T93,T94,T95,T96) - DINING TABLE/CHAIRS
8	155514-12-T97	EA	LEG - CENTER - 57" (T97,T98,T99,T00) - DINING TABLE/CHAIRS
8	140789-78-T77	EA	BLIND - DAY/NIGHTER - 27.5" X 62" - DINING TABLE/CHAIRS
9	153643-18-T89	EA	VALANCE - MODERATE - 27" X 14" (T89,T90,T91,T92)
9	153643-18-T93	EA	VALANCE - MODERATE - 27" X 14" (T93,T94,T95,T96)
9	153643-18-T97	EA	VALANCE - MODERATE - 27" X 14" (T97,T98,T99,T00)
9	152664-A6-T89	EA	LEG - RIGHT - 35" (T89,T90,T91,T92)
9	152664-A6-T93	EA	LEG - RIGHT - 35" (T93,T94,T95,T96)
9	152664-A6-T97	EA	LEG - RIGHT - 35" (T97,T98,T99,T00)
9	152664-A7-T89	EA	LEG - LEFT - 35" (T89,T90,T91,T92)
9	152664-A7-T93	EA	LEG - LEFT - 35" (T93,T94,T95,T96)
9	152664-A7-T97	EA	LEG - LEFT - 35" (T97,T98,T99,T00)
9	140789-71-T77	EA	BLIND - DAY/NIGHTER - 23" X 36"
10	147460-05-T77	EA	CURTAIN - PASS/WRAP/PRIVACY/PLEATED - 42.5" X 146.8"

COPYRIGHT © 2006 WINNEBAGO INDUSTRIES INC.

CURTAIN & CUSHION GROUP (CONTINUED)

HARDWARE

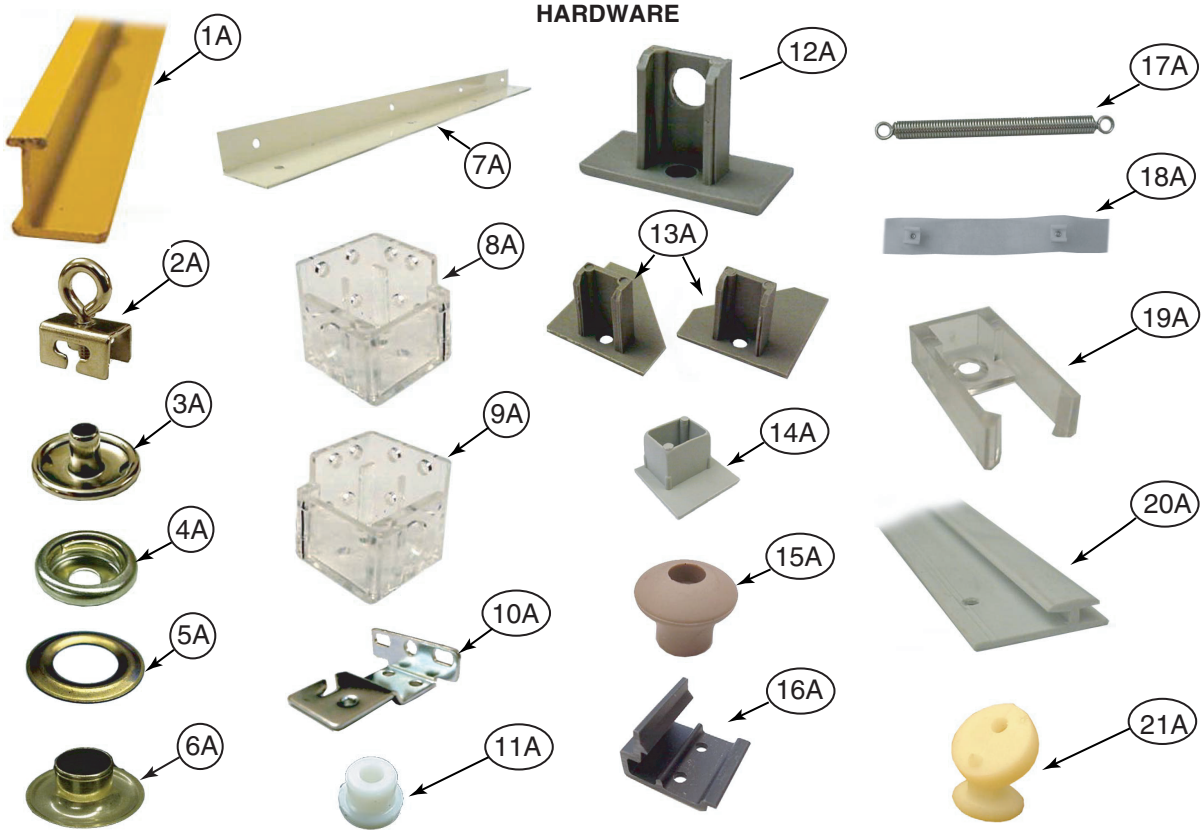

KEY	PART NUMBER	U/M	DESCRIPTION
1A	009700-04-002	EA	TRACK - CURTAIN - L-SHAPED - 15.5' - OFF WHITE - MINNIE WINNIE/SUNDANCER 400-SERIES
2A	009702-01-000	EA	END STOP - CURTAIN CARRIER - L ROD
3A	029155-01-000	EA	CAP - SNAP - 5/32" OUTSIDE DIAMETER OF PIN
4A	029156-01-000	EA	SOCKET - SNAP - 9/16" O.D.
5A	046867-02-000	EA	WASHER - HANDY BUTTON #3
6A	046867-03-000	EA	GROMMET - HANDY BUTTON #3
7A	075943-10-000	EA	BRACE - VALANCE - 20" - OFF WHITE
8A	083170-01-000	EA	BRACKET/BLIND - LEFT SIDE WHEN FACING WINDOW - CLEAR
9A	083170-02-000	EA	BRACKET/BLIND - RIGHT SIDE WHEN FACING WINDOW - CLEAR
10A	084434-01-000	EA	BRACKET - MOUNTING - ROLLER SHADE - 1 3/8"
11A	094896-02-000	EA	GROMMET - CORD/PLEATED BLIND - NYLON - GRAY
12A	094907-02-000	EA	END CAP - PLEATED BLIND/TOP - RH/LH - GRAY PLASTIC
13A	094907-04-000	EA	END CAP - PLEATED BLIND/BOTTOM - RH/LH
14A	094907-09-000	EA	END CAP/BLIND - CENTER RAIL - RH/LH
15A	097564-03-000	EA	HANDLE - KNOB - E-Z LIFT SHADE - TAN
	097593-02-000	FT	CORD - BLIND - PLEATED - GRAY
	097593-10-000	FT	CORD - BLIND - PLEATED - VANILLA
16A	097565-01-000	EA	BRACKET - MOUNTING - PLEATED BLIND
17A	097591-01-000	EA	SPRING - EXTENSION - PLEATED BLIND
17A	155748-01-000	EA	SPRING - EXTENSION - DAY/NIGHTER BLIND
18A	101031-01-000	YD	TAPE/GLIDE - 4.25" SPACING
19A	101033-02-000	EA	END CAP - LOW PROFILE TRACK - CLEAR FROM: 00-00-00 THRU: 09-04-05
	156172-04-01A	EA	END CAP - WALL TRACK - CLEAR FROM: 09-05-05 THRU: 99-99-99
20A	101033-08-000	EA	TRACK/WALL - 75" - FRT BUNK WINDOW OUTLOOK/SPIRIT 300-SERIES FROM: 00-00-00 THRU: 09-04-05
	156172-01-01A	EA	TRACK/WALL - 75" - BONE - FRT BUNK WINDOW OUTLOOK/SPIRIT 300-SERIES FROM: 09-05-05 THRU: 99-99-99
20A	101033-09-000	EA	TRACK - SIDE BUNK WDO OUTLOOK/SPIRIT 300/MINNIE WINNIE/SUNDANCER 400/VIEW/NAVION 500 FROM: 00-00-00 THRU: 09-04-05
	156172-02-01A	EA	TRACK - 32" - SIDE BUNK WINDOW OUTLOOK/SPIRIT 300-SER/MINNIE WINNIE/SUNDANCER 400-SER FROM: 09-05-05 THRU: 99-99-99
	156172-03-01A	EA	TRACK/WALL - 20" -BONE - SIDE BUNK WINDOW VIEW/NAVION 500-SERIES FROM: 09-05-05 THRU: 99-99-99
21A	102555-03-000	EA	BRACKET - (CLEAT TYPE) - F/BLIND HOLDOWN - MILKY WHITE

COPYRIGHT © 2006 WINNEBAGO INDUSTRIES INC.

CURTAIN & CUSHION GROUP (CONTINUED)

HARDWARE (CONTINUED)

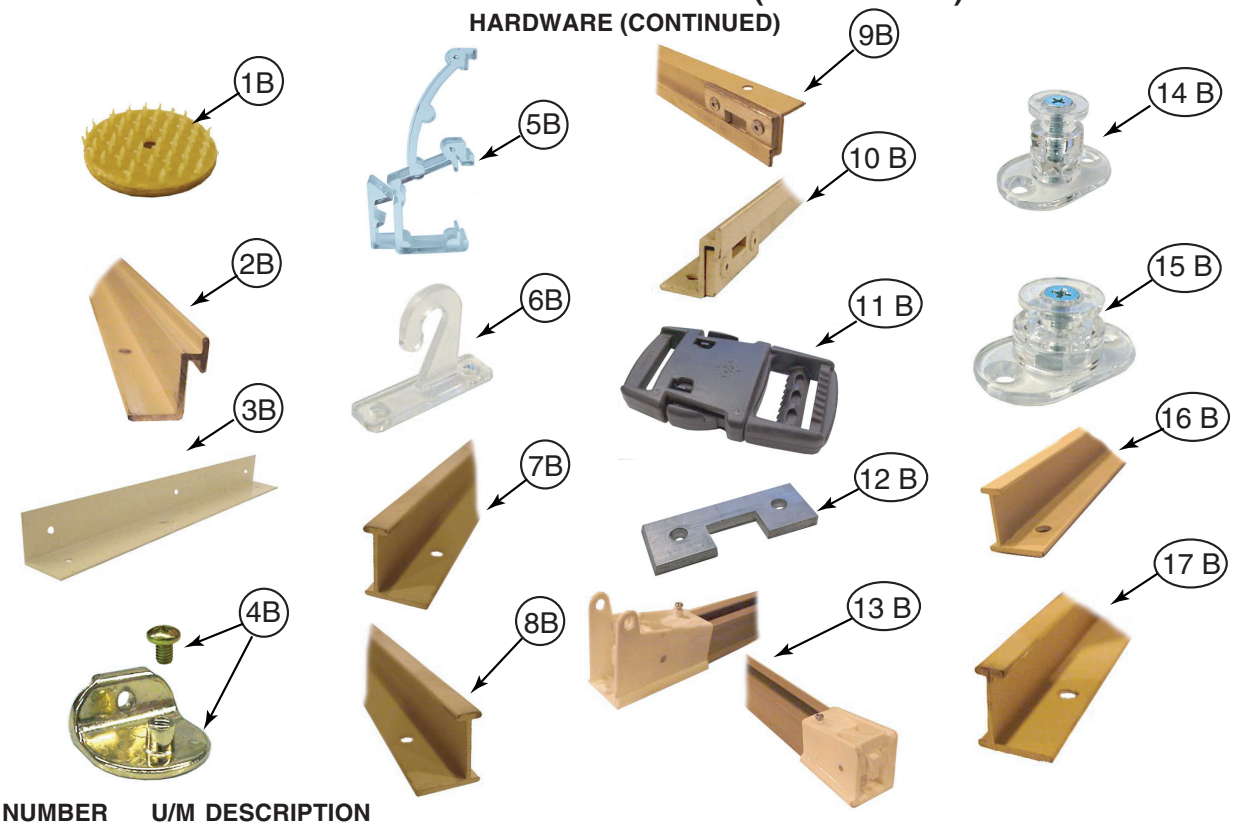

KEY	PART NUMBER	U/M	DESCRIPTION
1B	103242-01-000	EA	VELCRO HOOK - BEIGE 7/8" ROUND W/CENTER HOLE
	103242-02-000	EA	VELCRO HOOK - BLACK 7/8" ROUND W/CENTER HOLE
2B	105450-14-01A	EA	TRACK - CURTAIN - 90" - OFF WHITE - FRONT BUNK PRIVACY MINNIE/SPIRIT 300-SERIES
2B	105450-02-01A	EA	TRACK - CURTAIN - 48" - OFF WHITE - REAR PRIVACY MINNIE/SPIRIT 300-SERIES
2B	105450-08-01A	EA	TRACK - CURTAIN - 38" - OFF WHITE - REAR PRIVACY MINNIE/SPIRIT 300-SERIES
3B	105648-01-02A	EA	BRACE - VALANCE - 14" - OFF WHITE
4B	106544-01-000	EA	PULL - SHADE/BRASS
4B	106544-01-001	EA	SCREW - SHADE/BRASS
4B	106544-02-000	EA	PULL-SHADE - NICKEL
5B	109353-04-000	EA	CLIP - VALANCE SLAT MOUNTING - CLEAR PLASTIC
6B	109441-03-000	EA	BRACKET/HOOK - BLIND HOLD DOWN - NEW DESIGN/CLEAR
	109441-02-000	EA	SPACER/BRACKET - BLIND HOLD DOWN
7B	126456-03-05A	EA	TRACK/WRAPAROUND - PASSENGER - RIVERSTONE - ADVENTURER/SUNCRUISER G-SERIES
	126456-03-06A	EA	TRACK/WRAPAROUND - PASSENGER - CASHMERE - ADVENTURER/SUNCRUISER G-SERIES
8B	126456-04-05A	EA	TRACK/WRAPAROUND - DRIVER - RIVERSTONE - ADVENTURER/SUNCRUISER G-SERIES
	126456-04-06A	EA	TRACK/WRAPAROUND - DRIVER - CASHEMERE - ADVENTURER/SUNCRUISER G-SERIES
9B	127254-04-05A	EA	TRACK/WRAPARND-DRVR-GLACIER - SIGHTSEER/SUNOVA D-SERIES, VOYAGE/SUNRISE F-SERIES
10B	127254-14-03A	EA	TRACK/WRAPARND-PASS-GLACIER - SIGHTSEER/SUNOVA D-SERIES, VOYAGE/SUNRISE F-SERIES
11B	129491-01-000	EA	CATCH - SNAP HOOK - 1"
12B	130549-01-01A	EA	STOP - CURTAIN TRACK
13B	138460-07-03A	EA	TRACK - PASSENGER - RIVERSTONE- VECTRA/HORIZON S-SERIES/TOUR/ELLIPSE R-SERIES
	138460-07-04A	EA	TRACK - PASS ENGERY - CASHMERE- VECTRA/HORIZON S-SERIES/TOUR/ELLIPSE R-SERIES
13B	138460-08-03A	EA	TRACK - DRIVER - RIVERSTONE- VECTRA/HORIZON S-SERIES/TOUR/ELLIPSE R-SERIES
	138460-08-04A	EA	TRACK - DRIVER - CASHMERE- VECTRA/HORIZON S-SERIES/TOUR/ELLIPSE R-SERIES
14B	141634-01-000	EA	BRACKET-(BOBBIN TYPE) 7/8"H HOLDUPBASE(OVAL)-2 HOLE-CLEAR
15B	143805-01-000	EA	BRACKET-(BOBBIN TYPE) 1/2"H HOLDUPBASE(OVAL)-2 HOLES CLEAR
16B	146591-01-02A	EA	TRACK - CURTAIN - LEFT HAND - RIVERSTONE - JOURNEY/MERIDIAN P-SERIES
	146591-01-03A	EA	TRACK - CURTAIN - LEFT HAND - CASHMERE - JOURNEY/MERIDIAN P-SERIES
17B	146591-02-02A	EA	TRACK - CURTAIN - RIGHT HAND - RIVERSTONE - JOURNEY/MERIDIAN P-SERIES
	146591-02-03A	EA	TRACK - CURTAIN - RIGHT HAND - CASHMERE - JOURNEY/MERIDIAN P-SERIES
	154316-01-01A	EA	BRACE/ANGLE - W/HOLE - CASHMERE

CURTAIN & CUSHION GROUP (CONTINUED)

ACCESSORIES

KEY	PART NUMBER	U/M	DESCRIPTION
	099856-11-000	EA	STRAP - TIEDOWN - 7.9"
	118337-24-T89	EA	BUTTON - #36 - DOUBLE SIDED - FABRIC COVERED (T89, T90, T91, T92)
	118337-24-T93	EA	BUTTON - #36 - DOUBLE SIDED - FABRIC COVERED (T93, T94, T95, T96)
	118337-24-T97	EA	BUTTON - #36 - DOUBLE SIDED - FABRIC COVERED (T97, T98, T99, T00)
	118337-19-S76	EA	BUTTON - #36 W/TACK (T89, T90, T91, T92)
	118337-19-T93	EA	BUTTON - #36 W/TACK (T93, T94, T95, T96)
	118337-19-T97	EA	BUTTON - #36 W/TACK (T97, T98, T99, T00)

FABRICS

2006 FAMILY	T89/T90/T91/T92 WINTER WHEAT	T93/T94/T95/T96 SILVER SAGE	T97/T98/T99/T00 CAVALIER
BUCKET	588PI STYLE 148797-C6-000 *OPT. PAPYRUS - 142523-02-000	588PI STYLE 148797-12-000 *OPT. PAPYRUS - 142523-02-000	588PI STYLE 148797-C7-000 *OPT. BUFF - 079680-47-000
SOFA'S			
MANUAL	926 MANUAL SOFA 148797-C4-000	926 MANUAL SOFA 148797-11-000	926 MANUAL SOFA 148797-C5-000
60"	826 REST EASY W/815 OR 824 148797-C4-000 *OPT. PAPYRUS - 142523-02-000	826 REST EASY W/815 OR 824 148797-11-000 *OPT. PAPYRUS - 142523-02-000	826 REST EASY W/815 OR 824 148797-C5-000 *OPT. BUFF - 079680-47-000
70"	825 REST EASY W/830 ARMS 148797-C4-000 *OPT. PAPYRUS - 142523-02-000	825 REST EASY W/830 ARMS 148797-11-000 *OPT. PAPYRUS - 142523-02-000	825 REST EASY W/830 ARMS 148797-C5-000 *OPT. BUFF - 079680-47-000
DUAL	826 DUAL REST EASY 148797-C4-000 *OPT. PAPYRUS - 142523-02-000	826 DUAL REST EASY 148797-11-000 *OPT. PAPYRUS - 142523-02-000	826 DUAL REST EASY 148797-C5-000 *OPT. BUFF - 079680-47-000
J-LOUNGE **G38J/G38R ONLY**	101-75" J-LOUNGE 148797-C4-000 *OPT. PAPYRUS - 142523-02-000	101-75" J-LOUNGE 148797-11-000 *OPT. PAPYRUS - 142523-02-000	101-75" J-LOUNGE 148797-C5-000 *OPT. BUFF - 079680-47-000
LOUNGE PILLOW	(2) 17X17" LARGO STYLE FACE & BUTTONS- 148797-C8 BACK - 148797-C4-000	(2) 17X17" LARGO STYLE FACE & BUTTONS- 148797-C9 BACK - 148797-11-000	(2) 17X17" LARGO STYLE FACE & BUTTONS- 148797-D0 BACK - 148797-C5-000
DINETTE CUSHIONS	706 BACK/728 SEAT STYLE 148797-C4-000	706 BACK/728 SEAT STYLE 148797-11-000	706 BACK/728 SEAT STYLE 148797-C5-000
WRAP	148797-C6-000	148797-12-000	148797-D0-000
DINING CHAIRS	(2) REM #824 DINING CHAIR 148797-C8-000	(2) REM #824 DINING CHAIR 148797-C9-000	(2) REM #824 DINING CHAIR 148797-D0-000
FOLDING CHAIRS	REM #FC200 148797-C8-000	REM #FC200 148797-C9-000	REM #FC200 148797-D0-000

COPYRIGHT © 2006 WINNEBAGO INDUSTRIES INC.

CURTAIN & CUSHION GROUP (CONTINUED)

FABRIC (CONTINUED)

2006 FAMILY	T89/T90/T91/T92 WINTER WHEAT	T93/T94/T95/T96 SILVER SAGE	T97/T98/T99/T00 CAVALIER
LOUNGE CHAIR	470-1 CHAIR HOOP 148797-C6-000 *OPT. PAPYRUS - 142523-02-000	470-1 CHAIR HOOP 148797-C9-000 *OPT. PAPYRUS - 142523-02-000	470-1 CHAIR HOOP 148797-C7-000 *OPT. BUFF - 079680-47-000
EURO CHAIR (FLEXSTEEL)	APOLLO EURO W/OTTOMAN PAPYRUS - 142523-02-000	APOLLO EURO W/OTTOMAN PAPYRUS - 142523-02-000	APOLLO EURO W/OTTOMAN BUFF - 079680-47-000
LOUNGE WINDOWS	MONTICELLO LAMBREQUINS UNDERLAY - 148797-C6-000 TOP - 148797-C6-000 CENTER - 148797-C4-000 TRIM - 139041-80-000	MONTICELLO LAMBREQUINS UNDERLAY - 148797-12-000 TOP - 148797-12-000 CENTER - 148797-11-000 TRIM - 139041-67-000	MONTICELLO LAMBREQUINS UNDERLAY - 148797-C7-000 TOP - 148797-C7-000 CENTER - 148797-C5-000 TRIM - 139041-71-000
BEDROOM WDO TREATMENT	MONTICELLO LAMBREQUINS UNDERLAY - 137813-E8-000 TOP - 137813-E8-000 CENTER - 137813-E7-000 TRIM - 139041-80-000 LEGS - 137813-E8-000	MONTICELLO LAMBREQUINS UNDERLAY - 137813-B9-000 TOP - 137813-B9-000 CENTER - 137813-L7-000 TRIM - 139041-67-000 LEGS - 137813-B9-000	MONTICELLO LAMBREQUINS UNDERLAY - 137813-L9-000 TOP - 137813-L9-000 CENTER - 137813-L8-000 TRIM - 139041-71-000 LEGS - 137813-L9-000
***WHEN NEEDED (small wdo's)**	ASHWELL VALANCE BODY - 137813-E8-000 ¼ WELT - 137813-E7-000	ASHWELL VALANCE BODY - 137813-B9-000 ¼ WELT - 137813-L7-000	ASHWELL VALANCE BODY - 137813-L9-000 ¼ WELT - 137813-L8-000
BATH WINDOW	MODERATE W/CORD 137813-E8-000/139041-80-000	MODERATE W/CORD 137813-B9-000/139041-67-000	MODERATE W/CORD 137813-M0-000/139041-71-000
FRONT WRAP	PURCHASED PLEATED	PURCHASED PLEATED	PURCHASED PLEATED
DAY/NIGHTER	094911-58/094911-50 PUTTY/WT. DECO	094911-58/094911-50 PUTTY/WT. DECO	094911-58/094911-50 PUTTY/WT. DECO
GALLEY BLINDS	C011 BEIGE	C011 BEIGE	C011 BEIGE

COPYRIGHT © 2006 WINNEBAGO INDUSTRIES INC.

CURTAIN & CUSHION GROUP (CONTINUED)

FABRIC (CONTINUED)

2006 FAMILY	T89/T90/T91/T92 WINTER WHEAT	T93/T94/T95/T96 SILVER SAGE	T97/T98/T99/T00 CAVALIER
BEDCOVER	BEDCAP W/BRAID 137813-E5/139041-80 CHANNEL QUILT	BEDCAP W/BRAID 137813-D9/084415-F2 DIAMOND QUILT	BEDCAP W/BRAID 105745-X7/139041-11 DIAMOND QUILT
SHAMS	LARGO STYLE BODY & FLANGE - 137813-E7-000 BUTTONS - 137813-E7-000	LARGO STYLE BODY & FLANGE - 137813-B9-000 BUTTONS - 137813-L7-000	LARGO STYLE BODY & FLANGE - 137813-L9-000 BUTTONS - 137813-L8-000
BED PILLOW	(2) 17X17" LARGO STYLE BODY & FLANGE - 137813-E8-000 BUTTONS - 137813-E7-000	(2) 17X17" LARGO STYLE BODY & FLANGE - 137813-L7-000 BUTTONS - 137813-L7-000	(2) 17X17" LARGO STYLE BODY & FLANGE - 137813-M0-000 BUTTONS - 137813-L8-000
HEADBOARD	MONTICELLO STYLE UNDERLAY - 137813-E7-000 TOP - 137813-E7-000 CENTER - 137813-E8-000 TRIM - 139041-80-000	MONTICELLO STYLE UNDERLAY - 137813-L7-000 OVERLAY - 137813-L7-000 CENTER - 137813-B9-000 TRIM - 139041-67-000	MONTICELLO STYLE UNDERLAY - 137813-L8-000 OVERLAY - 137813-L8-000 CENTER - 137813-L9-000 TRIM - 139041-71-000
VANITY STOOL	TOP PORTION - 137813-E7-000 LID - 137813-E7-000 LOWER BAND - 137813-E8-000 CORD - 139041-80-000	TOP PORTION - 137813-L7-000 LID - 137813-L7-000 LOWER BAND - 137813-B9-000 CORD - 139041-67-000	TOP PORTION - 148797-G1-000 LID - 148797-G1-000 LOWER BAND - 137813-M0-000 CORD - 139041-71-000
SUITE CHAIR & OTTOMAN	FLEXSTEEL #954-10/#954-092 137813-E8-000	FLEXSTEEL #954-10/#954-092 148797-C9-000	FLEXSTEEL #954-10/#954-092 148797-G1-000
CABINET INSERT FABRIC	148797-C6-000	148797-12-000	148797-C7-000
CARPET	152251-05-02A BURLWOOD 102695-30-000	152251-02-01A 514 CORK 102695-12-000	152251-02-02A 504 DESERT ROCK 102695-16-000
CEILING FABRIC	113979-09-01A 102"	113979-09-01A 102"	113979-09-01A 102"

COPYRIGHT © 2006 WINNEBAGO INDUSTRIES INC.

DRIVERS COMPARTMENT GROUP

DASH

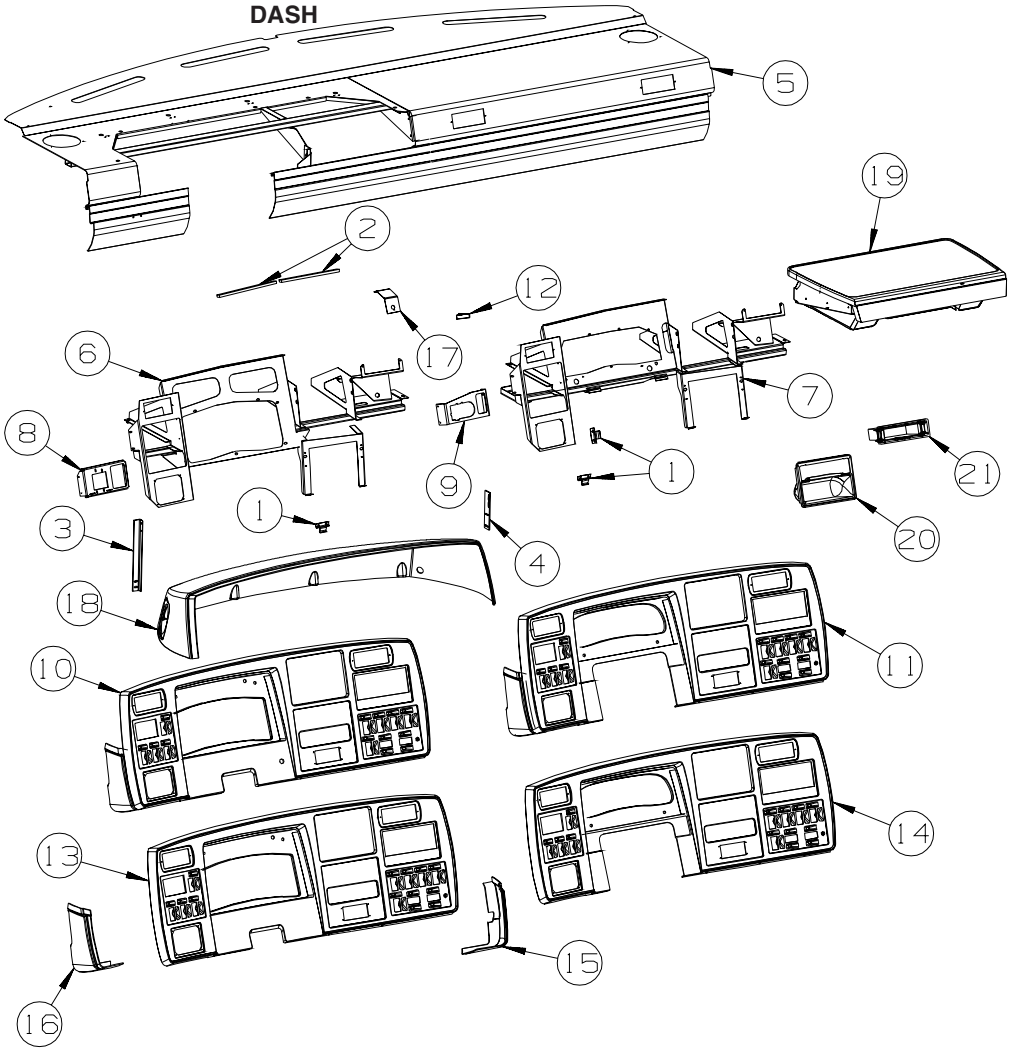

KEY	PART NUMBER	U/M	DESCRIPTION
1	073050-04-000	EA	CLIP/MOUNTING - VALANCE PANEL
2	110530-01-000	FT	SEAL - SPONGE - .31" X .62"
3	128692-01-02B	EA	ANGLE - FORMED, DASH SUPPORT, EC
4	139603-01-02B	EA	STRAP - DASH SUPPORT, CTR , E-CT
5	147887-02-T77	EA	DASH - COMPLETE - RIVERSTONE
5	147887-02-T81	EA	DASH - COMPLETE - CASHMERE
5	147887-04-T77	EA	DASH - COMPLETE - RIVERSTONE - FORD
5	147887-04-T81	EA	DASH - COMPLETE - CASHMERE - FORD
	106569-11-08A	EA	VINYL - LAMINATE - 1/4" X 25" X 100" - PUTTY - RIVERSTONE
	106569-11-09A	EA	VINYL - LAMINATE - 1/4" X 25" X 100" - DRIFTWOOD - CASHMERE
6	147889-01-02B	EA	REINFORCEMENT ASM - I/P, E-CT
7	153469-01-02B	EA	REINFORCEMENT ASM - IP, E-CT - FORD
8	148890-01-02B	EA	MOUNT - HEADLAMP SWITCH - E-COATED
9	153545-01-02B	EA	MOUNT - HEADLAMP SWITCH/FACE PLATE - METAL/BLACK - FORD
10	149031-03-S76	EA	POD - INSTRUMENT PANEL - RIVERSTONE
10	149031-03-S80	EA	POD - INSTRUMENT PANEL - CASHMERE
11	149031-06-S76	E A	POD - INSTRUMENT PANEL - RIVERSTONE - FORD
11	149031-06-S80	EA	POD - INSTRUMENT PANEL - CASHMERE - FORD
12	139427-02-02B	EA	STRAP - MOUNT, BEZEL, E-CT
13	147891-03-01A	EA	BEZEL - INSTRUMENT PANEL - RIVERSTONE
13	147891-03-02A	EA	BEZEL - INSTRUMENT PANEL - CASHMERE
14	147891-06-01A	EA	BEZEL - INSTRUMENT PANEL - FORD - RIVERSTONE - FORD
14	147891-06-02A	EA	BEZEL - INSTRUMENT PANEL - FORD - CASHMERE - FORD
15	148252-01-19A	EA	POD - INSTRUMENT PANEL - LOWER/RIGHT HAND - RIVERSTONE
15	148252-01-20A	EA	POD - INSTRUMENT PANEL - LOWER/RIGHT HAND - CASHMERE
16	148253-01-19A	EA	POD - INSTRUMENT PANEL - LOWER/LEFT HAND - RIVERSTONE
16	148253-01-20A	EA	POD - INSTRUMENT PANEL - LOWER/LEFT HAND - CASHMERE
17	149143-01-02B	EA	SUPPORT - PARK BRAKE SW

COPYRIGHT © 2006 WINNEBAGO INDUSTRIES INC.

DRIVERS COMPARTMENT GROUP (CONTINUED)

DASH (CONTINUED)

KEY	PART NUMBER	U/M	DESCRIPTION
18	147890-02-19A	EA	POD - INSTRUMENT PANEL - RIVERSTONE
18	147890-02-20A	EA	POD - INSTRUMENT PANEL - CASHMERE
19	135298-03-T77	EA	TABLE COMPLETE - WORKSTATION - RIVERSTONE
19	135298-03-T81	EA	TABLE COMPLETE - WORKSTATION - CASHMERE
	106569-09-10A	EA	VINYL - LAMINATE - 1/4" X 25" X 100" - BEIGE SPECKLE
20	111350-01-19A	EA	POCKET - INSTRUMENT PANEL - UPPER - RIVERSTONE
20	111350-01-20A	EA	POCKET - INSTRUMENT PANEL - UPPER - CASHMERE
21	096776-03-000	EA	STORAGE BOX - CD'S - 4 DISC HOLDER

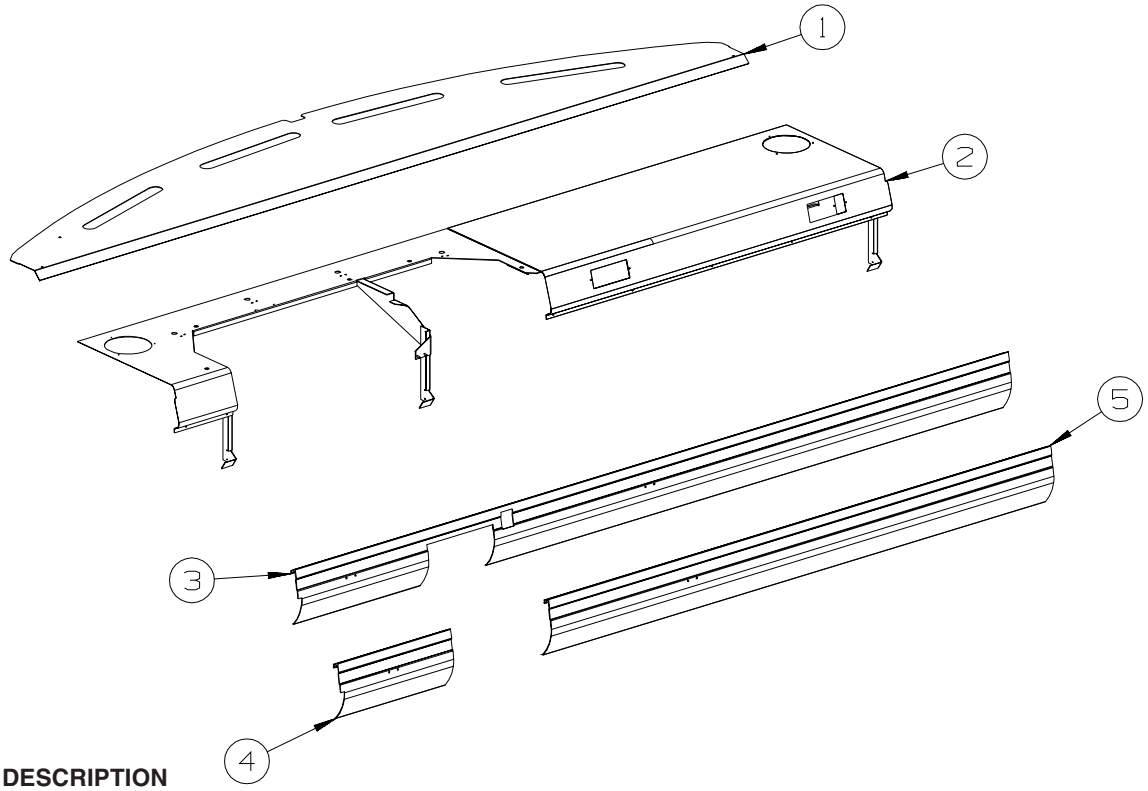

KEY	PART NUMBER	U/M	DESCRIPTION
1	132126-02-02B	EA	PANEL - DASH TOP - E-COATED
2	147888-02-02B	EA	DASH ASM
3	148214-01-01A	EA	TRIM - DASH/LOWER - WORKHORSE - RIVERSTONE - WORKHORSE
3	148214-01-02A	EA	TRIM - DASH/LOWER - WORKHORSE - CASHMERE - WORKHORSE
4	148214-02-01A	EA	TRIM - DASH/LOWER LEFT - FORD - RIVERSTONE - FORD
4	148214-02-02A	EA	TRIM - DASH/LOWER LEFT - FORD - CASHMERE - FORD
5	148214-03-01A	EA	TRIM - DASH/LOWER RIGHT - FORD - RIVERSTONE - FORD
5	148214-03-02A	EA	TRIM - DASH/LOWER RIGHT - FORD - CASHMERE - FORD

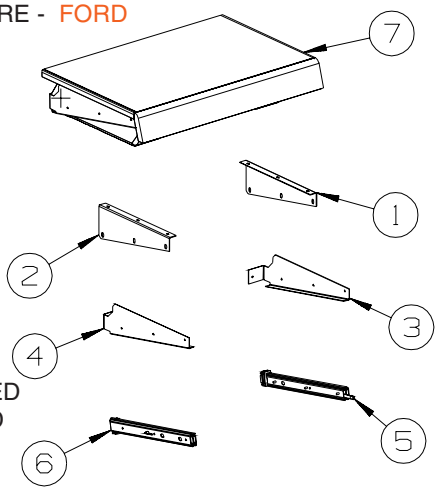

KEY	PART NUMBER	U/M	DESCRIPTION
1	135132-03-02B	EA	ANGLE-SLIDE,RH
2	135132-04-02B	EA	ANGLE-SLIDE,LH
3	135228-01-02B	EA	ANGLE - SLIDE - TRAY/RIGHT HAND - E-COATED
4	135228-02-02B	EA	ANGLE - SLIDE - TRAY/LEFT HAND - E-COATED
5	135314-01-01A	EA	SLIDE - DASH WORK STATION - RIGHT HAND
6	135314-02-01A	EA	SLIDE - DASH WORK STATION - LEFT HAND
7	135122-03-T77	EA	TABLE TOP - PULLOUT/WORKSTATION

COPYRIGHT © 2006 WINNEBAGO INDUSTRIES INC.

DRIVERS COMPARTMENT GROUP (CONTINUED)

MOTOR COVER

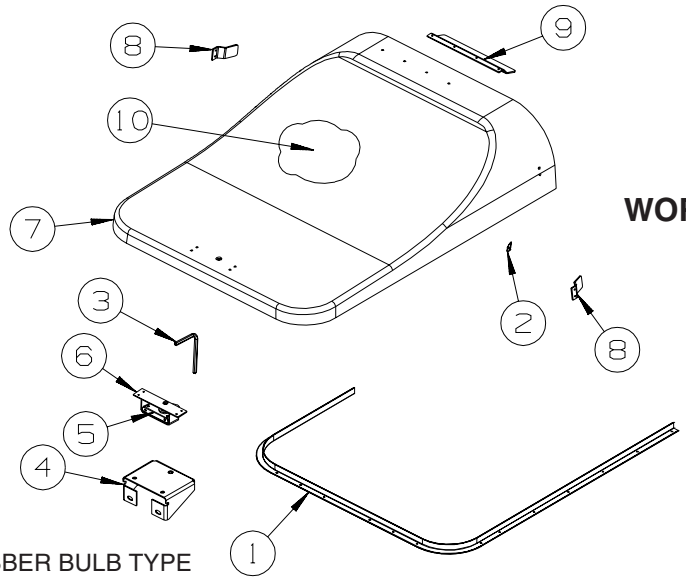

WORKHORSE

KEY	PART NUMBER	U/M	DESCRIPTION
1	137332-01-01A	EA	TRIM - MOTOR COVER
2	039623-01-000	FT	SEAL - MOTOR COVER - RUBBER BULB TYPE
3	116833-01-02B	EA	WRENCH - HEX MOTOR COVER - E-COATED
4	137305-02-02B	EA	BRACKET - STRIKE SUPPORT - E-COATED
5	116581-01-000	EA	LATCH - W/O STRIKE - MOTOR COVER
6	115850-01-02B	EA	RETAINER - LATCH - MOTOR COVER - RIGHT HAND - E-COATED
7	137097-02-S64	EA	COVER - MOTOR - W/CARPET (T89, T90, T91, T92)
7	137097-02-T93	EA	COVER - MOTOR - W/CARPET (T93, T94, T95, T96)
7	137097-02-T97	EA	COVER - MOTOR - W/CARPET (T97, T98, T99, T00)
	137096-01-01A	EA	COVER - MOTOR - W/O CARPET
8	115855-04-02B	EA	RETAINER - MOTOR COVER/SIDE - E-COATD
9	115855-03-02B	EA	RETAINER - MOTOR COVER/TOP - E-COATED
10	134497-01-000	SF	FOIL/ALUMINUM - REINFORCED
	140168-01-000	EA	INSULATION/ENGINE COVER

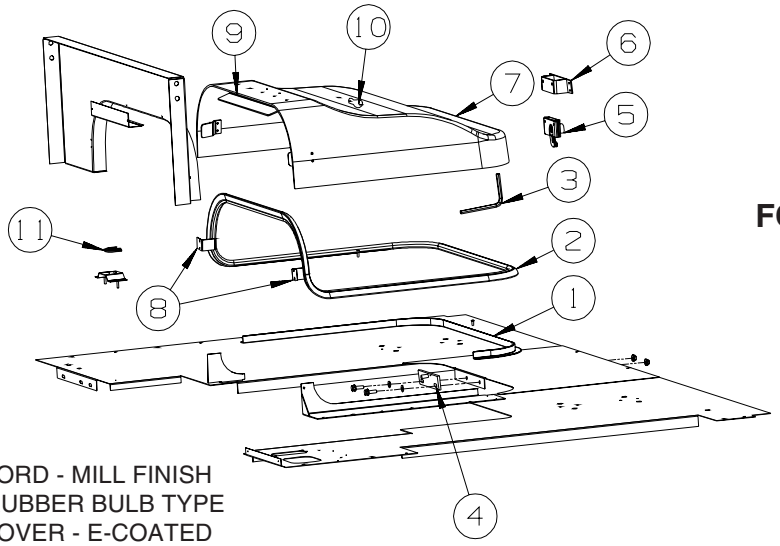

FORD

KEY	PART NUMBER	U/M	DESCRIPTION
1	115860-06-01A	EA	TRIM - MOTOR COVER - FORD - MILL FINISH
2	039623-01-000	FT	SEAL - MOTOR COVER - RUBBER BULB TYPE
3	116833-01-02B	EA	WRENCH - HEX MOTOR COVER - E-COATED
4	115852-01-02B	EA	STRIKE - LATCH - MOTOR COVER - E-COATED
5	116581-01-000	EA	LATCH - W/O STRIKE - MOTOR COVER
6	115850-01-02B	EA	RETAINER - LATCH - MOTOR COVER - RIGHT HAND - E-COATED
7	153971-01-T53	EA	COVER - MOTOR - W/CARPET (T89, T90, T91, T92)
7	153971-01-T81	EA	COVER - MOTOR - W/CARPET (T93, T94, T95, T96)
7	153971-01-T85	EA	COVER - MOTOR - W/CARPET (T97, T98, T99, T00)
	153970-01-01A	EA	COVER - MOTOR - W/O CARPET - FORD
8	115855-04-02B	EA	RETAINER - MOTOR COVER/SIDE - E-COATED
9	115855-01-02B	EA	RETAINER - MOTOR COVER/TOP - E-COATED
10	134497-01-000	SF	FOIL/ALUMINUM - REINFORCED
11	143798-01-01A	EA	CATCH - FLOOR TO TABLE LEG - BRIGHT WHITE

COPYRIGHT © 2006 WINNEBAGO INDUSTRIES INC.

DRIVERS COMPARTMENT GROUP (CONTINUED)

BEVERAGE TRAY

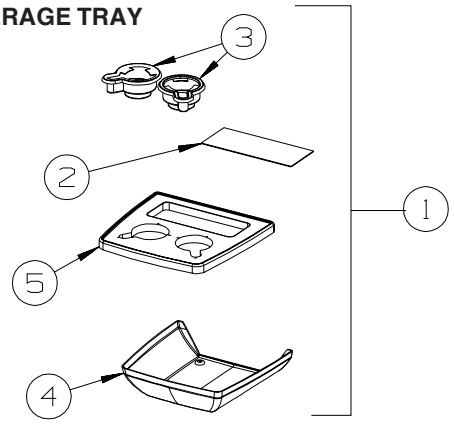

WORKHORSE

KEY	PART NUMBER	U/M	DESCRIPTION
1	148922-02-T89	EA	TRAY - BEVERAGE - W/CONVENIENCE TRAY - CASHMERE
1	148922-02-T97	EA	TRAY - BEVERAGE - W/CONVENIENCE TRAY - RIVERSTONE
2	122717-11-01A	EA	PAD - NON-SKID - PSA - 4.5" X 11"
3	133831-01-01A	EA	HOLDER - CUP W/THREE CENTERLINE RUBBER FINGERS
4	148818-01-19A	EA	COVER - BEVERAGE TRAY - BOTTOM - RIVERSTONE
4	148818-01-20A	EA	COVER - BEVERAGE TRAY - BOTTOM - CASHMERE
5	148918-01-02A	EA	TRAY - BEVERAGE CENTER - BEIGE SPECKLE
	150352-02-01A	EA	APPLIQUE - BEVERAGE TRAY - ROMAN BRONZE

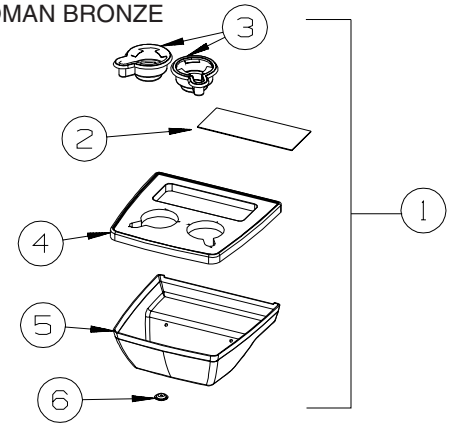

FORD

KEY	PART NUMBER	U/M	DESCRIPTION
1	149301-04-T89	EA	TRAY - BEVERAGE - W/CONVENIENCE TRAY - CASHMERE
1	149301-04-T97	EA	TRAY - BEVERAGE - W/CONVENIENCE TRAY - RIVERSTONE
2	122717-11-01A	EA	PAD - NON-SKID - PSA - 4.5" X 11"
3	133831-01-01A	EA	HOLDER - CUP W/THREE CENTERLINE RUBBER FINGERS
4	148918-01-02A	EA	TRAY - BEVERAGE CENTER - BEIGE SPECKLE
4	150352-02-01A	EA	APPLIQUE - BEVERAGE TRAY - ROMAN BRONZE
5	149256-02-19A	EA	COVER - BEVERAGE TRAY BOTTOM - RIVERSTONE
5	149256-02-20A	EA	COVER - BEVERAGE TRAY BOTTOM - CASHMERE
6	143798-02-01A	EA	CATCH - TABLE LEG TO FLOOR - BRIGHT WHITE

COPYRIGHT © 2006 WINNEBAGO INDUSTRIES INC.

DRIVERS COMPARTMENT GROUP (CONTINUED)

FRONT INTERIOR

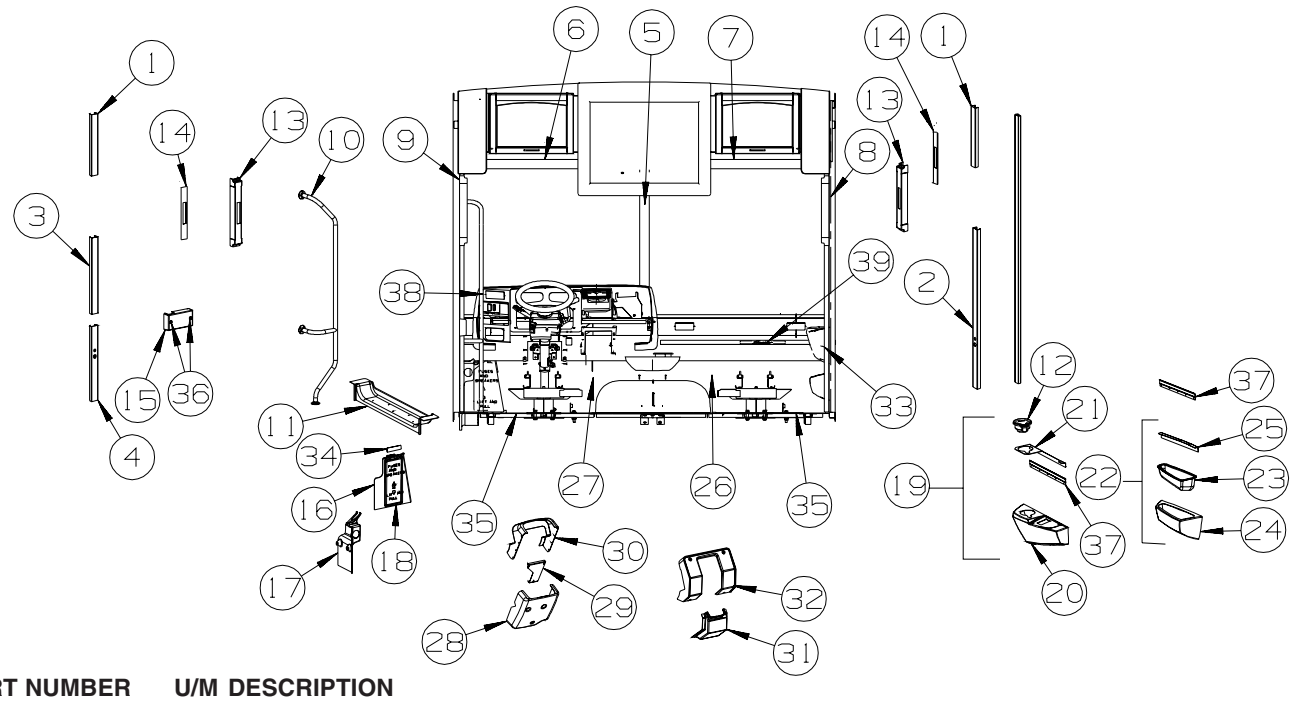

KEY	PART NUMBER	U/M	DESCRIPTION
1	024700-58-000	EA	COVER - ROLL BAR - SIDEWALL - 16.5" - OFF WHITE
2	024700-59-000	EA	COVER - ROLL BAR - SIDEWALL - 44.1" - OFF WHITE
3	024700-66-000	EA	COVER - ROLL BAR - SIDEWALL - 20.6" - OFF WHITE
4	024700-67-000	EA	COVER - ROLL BAR - SIDEWALL - 20.1" - OFF WHITE
5	118452-04-19A	EA	TRIM - WINDSHIELD/CENTER - RIVERSTONE
5	118452-04-20A	EA	TRIM - WINDSHIELD/CENTER - CASHMERE
6	118453-03-04A	EA	TRIM - WINDSHIELD - INNER/TOP/PASSENGER - RIVERSTONE
6	118453-03-05A	EA	TRIM - WINDSHIELD - INNER/TOP/PASSENGER - CASHMERE
7	118453-04-04A	EA	TRIM - WINDSHIELD - INNER/TOP/DRIVER - RIVERSTONE
7	118453-04-05A	EA	TRIM - WINDSHIELD - INNER/TOP/DRIVER - CASHMERE
8	125508-01-04A	EA	TRIM - A-PILLAR - PASSENGER/INTERIOR - RIVERSTONE
8	125508-01-05A	EA	TRIM - A-PILLAR - PASSENGER/INTERIOR - CASHMERE
9	125508-02-04A	EA	TRIM - A-PILLAR - DRIVER/INTERIOR - RIVERSTONE
9	125508-02-05A	EA	TRIM - A-PILLAR - DRIVER/INTERIOR - CASHMERE
10	131058-04-02A	EA	HAND RAIL - INTERIOR CAB DOOR - BLACK
11	131849-01-19A	EA	TRIM/STEP - DRIVER DOOR - RIVERSTONE
11	131849-01-20A	EA	TRIM/STEP - DRIVER DOOR - CASHMERE
	102569-02-000	EA	MAT - ANTI SLIP - LOWER
12	133831-01-01A	EA	HOLDER - CUP W/THREE CENTERLINE RUBBER FINGERS
13	140151-01-01A	EA	COVER - SEAT BELT - OFF WHITE
14	140151-03-01A	EA	COVER - SEAT BELT SLIDE - BLACK
15	141072-01-01A	EA	COVER - BRACKET/LATCH - OFF WHITE
16	148824-01-19A	EA	PANEL/TRIM - FUSE PANEL/LEFT HAND - RIVERSTONE
16	148824-01-20A	EA	PANEL/TRIM - FUSE PANEL/LEFT HAND - CASHMERE
16	148824-02-19A	EA	PANEL/TRIM - FUSE PANEL/LEFT HAND - RIVERSTONE - FORD
16	148824-02-20A	EA	PANEL/TRIM - FUSE PANEL/LEFT HAND - CASHMERE - FORD
17	148825-01-19A	EA	PANEL/TRIM - UNDER DASH/LEFT HAND - RIVERSTONE
17	148825-01-20A	EA	PANEL/TRIM - UNDER DASH/LEFT HAND - CASHMERE
18	148826-01-19A	EA	PANEL/DOOR - FUSE PANEL/LEFT HAND - RIVERSTONE
18	148826-01-20A	EA	PANEL/DOOR - FUSE PANEL/LEFT HAND - CASHMERE
19	148829-01-S72	EA	PANEL - PASSENGER SIDE/UPPER - RIVERSTONE
19	148829-01-S64	EA	PANEL - PASSENGER SIDE/UPPER - CASHMERE
20	148830-01-19A	EA	PANEL - PASSENGER SIDE - UPPER - RIVERSTONE
20	148830-01-20A	EA	PANEL - PASSENGER SIDE - UPPER - CASHMERE
21	149218-01-02B	EA	BRACKET - MOUNTING - CUPHOLDER - E-COATED
22	148831-01-S72	EA	PANEL - PASSENGER SIDE/LOWER - RIVERSTONE
22	148831-01-S64	EA	PANEL - PASSENGER SIDE/LOWER - CASHMERE
23	148828-01-19A	EA	POCKET/STORAGE - PASSENGER SIDE - RIVERSTONE
23	148828-01-20A	EA	POCKET/STORAGE - PASSENGER SIDE - CASHMERE
24	148832-01-19A	EA	PANEL - PASSENGER SIDE - LOWER - RIVERSTONE
24	148832-01-20A	EA	PANEL - PASSENGER SIDE - LOWER - CASHMERE

COPYRIGHT © 2006 WINNEBAGO INDUSTRIES INC.

DRIVERS COMPARTMENT GROUP (CONTINUED)

FRONT INTERIOR (CONTINUED)

KEY	PART NUMBER	U/M	DESCRIPTION
25	149229-01-02B	EA	BRACKET - PANEL MOUNTING - E-COATED
26	140168-10-000	EA	INSULATION-CAB,RAD CVR,MAIN
26	140168-02-000	EA	INSULATION/RADIATOR COVER - MAIN - FORD
27	154928-02-000	EA	INSULATION - CAB, ENGINE COVER
27	134455-04-000	EA	INSULATION/RADIATOR COVER - LEFT HAND - FORD
28	148763-01-19A	EA	COVER - STEERING COLUMN - LOWER - RIVERSTONE
28	148763-01-20A	EA	COVER - STEERING COLUMN - LOWER - CASHMERE
29	148806-01-02B	EA	MOUNT ASM-STEERING COVE, E-CT
30	150784-01-19A	EA	COVER - STEERING COLUMN - UPPER - RIVERSTONE
30	150784-01-20A	EA	COVER - STEERING COLUMN - UPPER - CASHMERE
31	125795-01-19A	EA	COVER - STEERING COLUMN/LOWER - RIVERSTONE - FORD
31	125795-01-20A	EA	COVER - STEERING COLUMN/LOWER - CASHMERE - FORD
32	148815-01-19A	EA	COVER - STEERING COLUMN - LOWER - RIVERSTONE - FORD
32	148815-01-20A	EA	COVER - STEERING COLUMN - LOWER - CASHMERE - FORD
33	150352-03-01A	EA	APPLIQUE/STRIP - PASS/LOWER DASH- 1.1"X 44.4"-ROMAN BRONZE
34	150352-04-01A	EA	APPLIQUE/STRIP - DRVR/LOWER DASH - 1.1"X 3" - ROMAN BRONZE
35	105924-01-S64	EA	MAT/FLOOR - 18" X 27" (T89, T90, T91, T92)
35	105924-01-TB0	EA	MAT/FLOOR - 18" X 27" (T93, T94, T95, T96)
35	105924-01-T85	EA	MAT/FLOOR - 18" X 27" (T97, T98, T99, T00)
36	140151-02-01A	EA	COVER - SCREW - OFF WHITE
37	130034-08-02B	EA	CLIP - TRIM - E-COATED
38	150352-01-01A	EA	APPLIQUE - INSTRUMENT PANEL - ROMAN BRONZE
39	126340-08-01A	EA	DECAL - LOGO - “SUNCRUISER” - 3-D - CHAMPAGNE BEIGE

COPYRIGHT © 2006 WINNEBAGO INDUSTRIES INC.

DRIVERS COMPARTMENT GROUP (CONTINUED)

FRONT INTERIOR (CONTINUED)

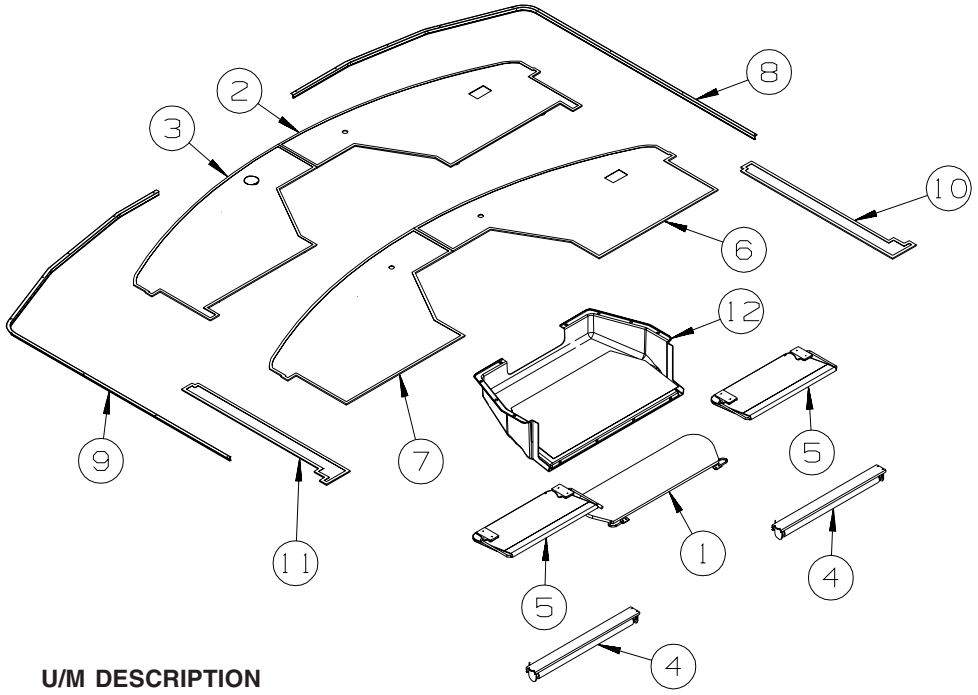

OVERHEAD PANELS W/FRONT TV

KEY	PART NUMBER	U/M	DESCRIPTION
1	123298-05-08A	EA	SUNVISOR - 8" X 30" - PUTTY - RIVERSTONE
1	123298-05-09A	EA	SUNVISOR - 8" X 30" - DRIFTWOOD - CASHMERE
2	126440-31-T77	EA	PANEL - OVERHEAD/FRONT/BOTTOM/RH - VINYL COVERED - RIVERSTONE - POWERED SUNVISORS
2	126440-31-T81	EA	PANEL - OVERHEAD/FRONT/BOTTOM/RH - VINYL COVERED - CASHMERE - POWERED SUNVISORS
3	126440-32-T77	EA	PANEL - OVERHEAD/FRONT/BOTTOM/LH - VINYL COVERED - RIVERSTONE - POWERED SUNVISORS
3	126440-32-T81	EA	PANEL - OVERHEAD/FRONT/BOTTOM/LH - VINYL COVERED - CASHMERE - POWERED SUNVISORS
4	142380-01-01A	EA	SHADE - POWER - 25.7" - POWERED SUNVISORS
5	123298-04-08A	EA	SUNVISOR - 10.5" X 21" - DRIVER/PASSENGER - PUTTY - RIVERSTONE
5	123298-04-09A	EA	SUNVISOR - 10.5" X 21" - DRIVER/PASSENGER - DRIFTWOOD - CASHMERE
6	126440-33-T77	EA	PANEL - OVERHEAD/FRONT/BOTTOM/RH - VINYL COVERED - RIVERSTONE
6	126440-33-T81	EA	PANEL - OVERHEAD/FRONT/BOTTOM/RH - VINYL COVERED - CASHMERE
7	126440-34-T77	EA	PANEL - OVERHEAD/FRONT/BOTTOM/LH - VINYL COVERED - RIVERSTONE
7	126440-34-T81	EA	PANEL - OVERHEAD/FRONT/BOTTOM/LH - VINYL COVERED - CASHMERE
8	126456-03-05A	EA	TRACK/WRAPAROUND - PASSENGER - RIVERSTONE
8	126456-03-06A	EA	TRACK/WRAPAROUND - PASSENGER - CASHMERE
9	126456-04-05A	EA	TRACK/WRAPAROUND - DRIVER - RIVERSTONE
9	126456-04-06A	EA	TRACK/WRAPAROUND - DRIVER - CASHMERE
10	144648-01-T77	EA	PANEL - OVERHEAD/FRONT/BOTTOM/LEFT HAND - VINYL COVERED - RIVERSTONE
10	144648-01-T81	EA	PANEL - OVERHEAD/FRONT/BOTTOM/LEFT HAND - VINYL COVERED - CASHMERE
11	144648-02-T77	EA	PANEL - OVERHEAD/FRONT/LEFT HAND - RIVERSTONE
11	144648-02-T81	EA	PANEL - OVERHEAD/FRONT/LEFT HAND - CASHMERE
12	152485-01-19A	EA	COVER - FRONT TV - RIVERSTONE
12	152485-01-20A	EA	COVER - FRONT TV - CASHMERE

COPYRIGHT © 2006 WINNEBAGO INDUSTRIES INC.

DRIVERS COMPARTMENT GROUP (CONTINUED)

FRONT INTERIOR (CONTINUED)

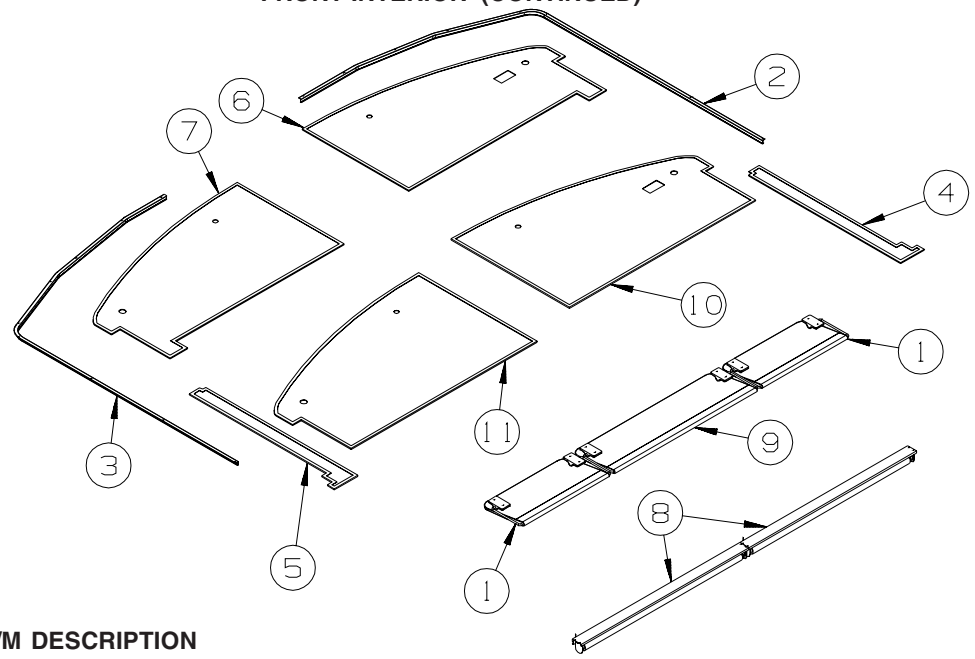

OVERHEAD PANELS WO FRONT TV

KEY	PART NUMBER	U/M	DESCRIPTION
1	123298-04-08A	EA	SUNVISOR - 10.5" X 21" - DRIVER/PASSENGER - PUTTY - RIVERSTONE
1	123298-04-09A	EA	SUNVISOR - 10.5" X 21" - DRIVER/PASSENGER - DRIFTWOOD - CASHMERE
2	126456-03-05A	EA	TRACK/WRAPAROUND - PASSENGER - RIVERSTONE
2	126456-03-06A	EA	TRACK/WRAPAROUND - PASSENGER - CASHMERE
3	126456-04-05A	EA	TRACK/WRAPAROUND - DRIVER - RIVERSTONE
3	126456-04-06A	EA	TRACK/WRAPAROUND - DRIVER - CASHMERE
4	144648-01-T77	EA	PANEL - OVERHEAD/FRONT/BOTTOM/LEFT HAND - VINYL COVERED - RIVERSTONE
4	144648-01-T81	EA	PANEL - OVERHEAD/FRONT/BOTTOM/LEFT HAND - VINYL COVERED - CASHMERE
5	144648-02-T77	EA	PANEL - OVERHEAD/FRONT/LEFT HAND - RIVERSTONE
5	144648-02-T81	EA	PANEL - OVERHEAD/FRONT/LEFT HAND - CASHMERE
6	126440-23-T77	EA	PANEL - OVERHEAD/FRONT/BOTTOM/RIGHT HAND - RIVERSTONE - POWERED SUNVISORS
6	126440-23-T81	EA	PANEL - OVERHEAD/FRONT/BOTTOM/RIGHT HAND - CASHMERE - POWERED SUNVISORS
7	126440-24-T77	EA	PANEL - OVERHEAD/FRONT/BOTTOM/LEFT HAND - RIVERSTONE - POWERED SUNVISORS
7	126440-24-T81	EA	PANEL - OVERHEAD/FRONT/BOTTOM/LEFT HAND - CASHMERE - POWERED SUNVISORS
8	142380-02-01A	EA	SHADE - POWER - 41.2" - POWERED SUNVISORS
9	123298-06-08A	EA	SUNVISOR - 10.5" X 35" - PUTTY - RIVERSTONE
9	123298-06-09A	EA	SUNVISOR - 10.5" X 35" - DRIFTWOOD - CASHMERE
10	126440-25-T77	EA	PANEL - OVHD/FRONT/BOTTOM/RH- RIVERSTONE
10	126440-25-T81	EA	PANEL - OVHD/FRONT/BOTTOM/RH- CASHMERE
11	126440-26-T77	EA	PANEL - OVHD/FRONT/BOTTOM/LH- RIVERSTONE
11	126440-26-T81	EA	PANEL - OVHD/FRONT/BOTTOM/LH- CASHMERE

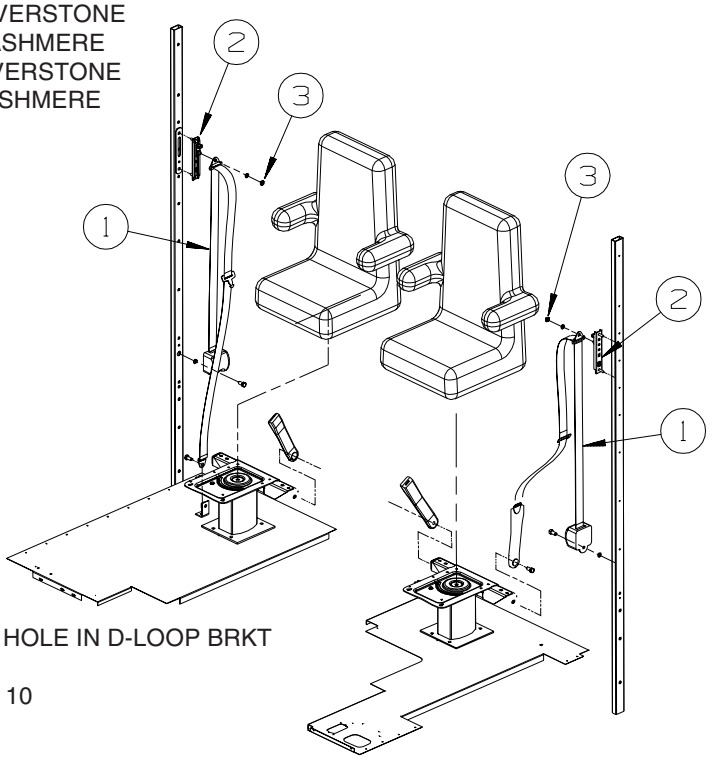

KEY	PART NUMBER	U/M	DESCRIPTION
1*	091990-08-01A	EA	SEAT BELT - 3 POINT - .766" DIAMETER HOLE IN D-LOOP BRKT
2	127598-01-01A	EA	ADJUSTER - SEATBELT - D-LOOP
3	127598-02-000	EA	NUT - HEX FLANGE - M10 X 1.5 - CLASS 10

***COMPONENT PARTS LISTED LATER IN THIS GROUP**

COPYRIGHT © 2006 WINNEBAGO INDUSTRIES INC.

DRIVERS COMPARTMENT GROUP (CONTINUED)

FRONT INTERIOR (CONTINUED)

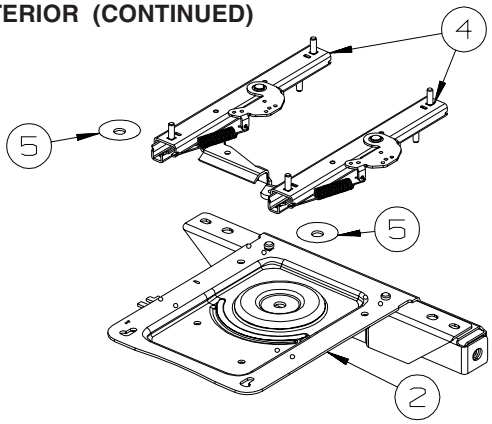

PASSENGER MANUAL

KEY	PART NUMBER	U/M	DESCRIPTION
1	133408-01-000	EA	PEDESTAL - SEAT - DRIVER/PASSENGER - 9 3/4"
2	133408-20-000	EA	TOP PLATE - PASSENGER - W/ANCHOR
3	107921-06-000	EA	BEARING KIT - PEDESTAL
4	131566-04-000	EA	SLIDE/SEAT - HEAVY DUTY LOCKING - 5"
	119952-07-000	EA	WIRE - LATCH RELEASE/ROTARY
5	131566-05-000	EA	WASHER - SLIDE SPACER
6	133408-04-000	EA	BRACKET - ANCHOR/FLOOR

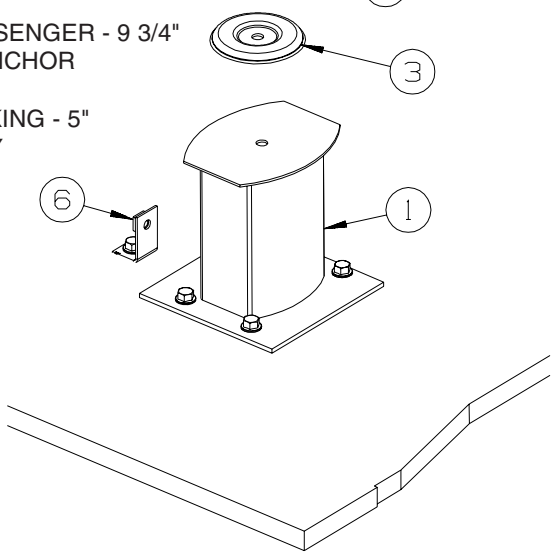

DRIVER MANUAL

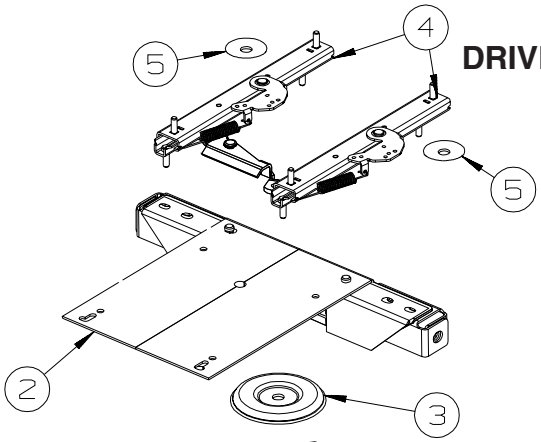

KEY	PART NUMBER	U/M	DESCRIPTION
1	133408-01-000	EA	PEDESTAL - SEAT/DRIVER - 9 3/4"
2	133408-19-000	EA	TOP PLATE - DRIVERS - W/ANCHOR
3	107921-06-000	EA	BEARING KIT - PEDESTAL
4	131566-04-000	EA	SLIDE/SEAT - HEAVY DUTY LOCKING - 5"
	119952-07-000	EA	WIRE - LATCH RELEASE/ROTARY
5	131566-05-000	EA	WASHER - SLIDE SPACER
6	133408-04-000	EA	BRACKET - ANCHOR/FLOOR

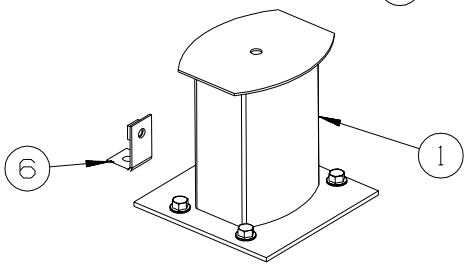

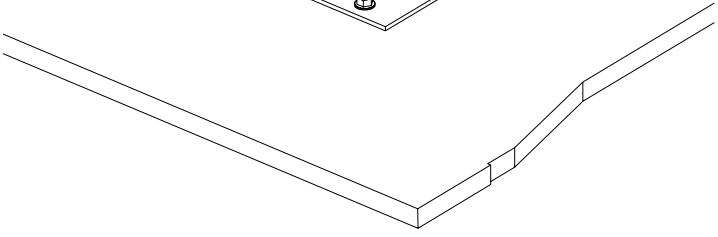

COPYRIGHT © 2006 WINNEBAGO INDUSTRIES INC.

DRIVERS COMPARTMENT GROUP (CONTINUED)

FRONT INTERIOR (CONTINUED)

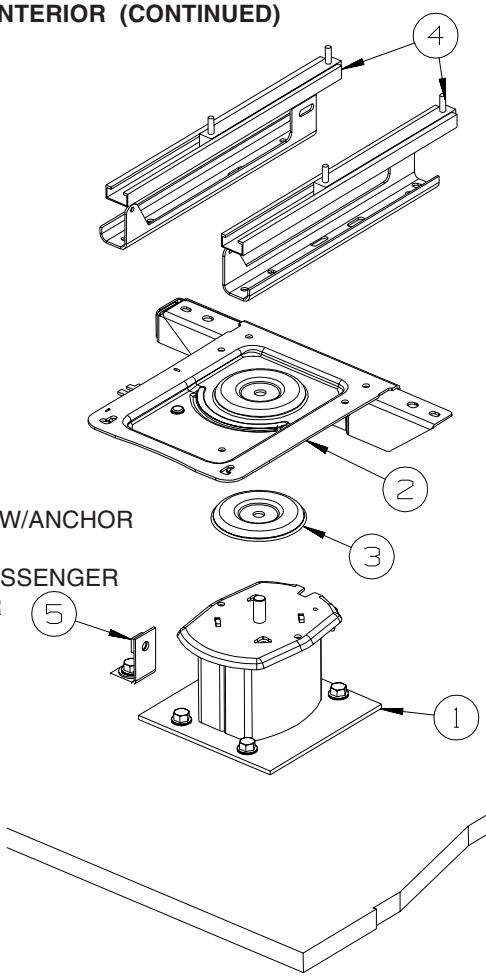

PASSENGER POWERED

KEY	PART NUMBER	U/M	DESCRIPTION
1	133408-05-000	EA	PEDESTAL - SEAT - 5.75"
2	133408-20-000	EA	TOP PLATE - PASSENGER - W/ANCHOR
3	107921-06-000	EA	BEARING KIT - PEDESTAL
4*	147767-02-000	EA	SEAT - POWER - 6-WAY - PASSENGER
5	133408-04-000	EA	BRACKET - ANCHOR/FLOOR

***COMPONENT PARTS LISTED LATER IN THIS GROUP**

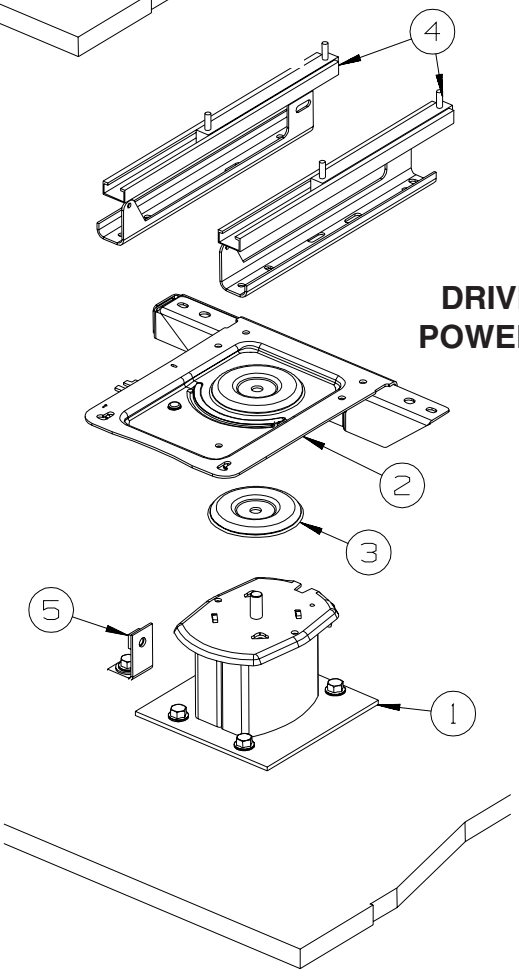

DRIVER POWERED

KEY	PART NUMBER	U/M	DESCRIPTION
1	133408-05-000	EA	PEDESTAL - SEAT - 5.75"
2	133408-19-000	EA	TOP PLATE - DRIVERS - W/ANCHOR
3	107921-06-000	EA	BEARING KIT - PEDESTAL
4*	147767-01-000	EA	SEAT - POWER - 6-WAY - DRIVER
5	133408-04-000	EA	BRACKET - ANCHOR/FLOOR

***COMPONENT PARTS LISTED LATER IN THIS GROUP**

COPYRIGHT © 2006 WINNEBAGO INDUSTRIES INC.

DRIVERS COMPARTMENT GROUP (CONTINUED)

FRONT INTERIOR (CONTINUED)

COMPONENT PARTS FOR FRONT INTERIOR

091990-08-01A

KEY	PART NUMBER	U/M	DESCRIPTION	VENDOR NO.
	091990-01-701	EA	EXTENDER 9" FOR A8408 3 PT	I-1331-02
	091990-01-703	EA	RECEIVER/FEMALE END-SEATBELT	I-1159-02
	091990-05-700	EA	SLEEVE/BUCKLE COVER-PLASTIC	209S-2
	091990-05-701	EA	CAP/COVER - BOLT HOLE COVER	209SC-02
	091990-05-702	EA	SLEEVE/RETRACTABLE COVER	309C-02

147767-01-000, 147767-02-000

KEY	PART NUMBER	U/M	DESCRIPTION	VENDOR NO
	147767-01-700	EA	SWITCH PLATE	SHROCK-9PT-SWT-PLTE
	147767-01-701	EA	MOTOR - VERTICAL	SHROCK 9PT-M0-VER-0
	147767-01-702	EA	MOTOR - HORIZONTAL	SHROCK 9PT-M0-HOZ-0

COPYRIGHT © 2006 WINNEBAGO INDUSTRIES INC.

DRIVERS COMPARTMENT GROUP (CONTINUED)

CABINETS

W/FRONT TV

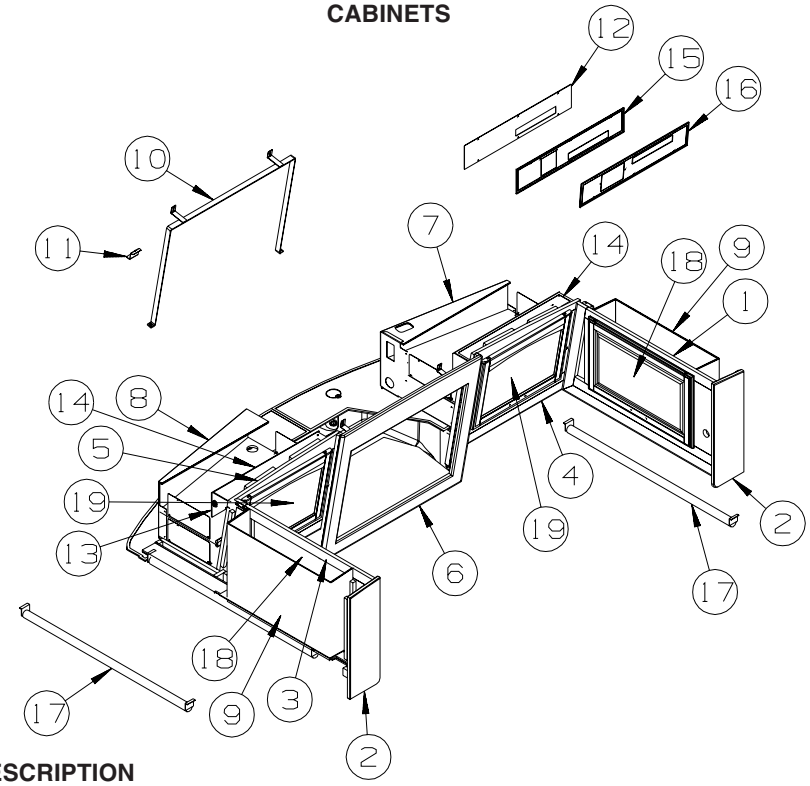

KEY	PART NUMBER	U/M	DESCRIPTION
1	152173-01-T77	EA	CABINET - OVERHEAD/FRONT/RH HAND - W/O DOORS/HDW - PORTSMOUTH OAK
1	152173-01-T78	EA	CABINET - OVERHEAD/FRONT/RH HAND - W/O DOORS/HDW - CONCERT CHERRY
1	152173-01-T79	EA	CABINET - OVERHEAD/FRONT/RH HAND - W/O DOORS/HDW - WASHED MAPLE
1	152173-01-T80	EA	CABINET - OVERHEAD/FRONT/RH HAND - W/O DOORS/HDW - SIERRA MAPLE
2	145517-34-T77	EA	END CAP - OVERHEAD CABINET - PORTSMOUTH OAK
2	145517-34-T78	EA	END CAP - OVERHEAD CABINET - CONCERT CHERRY
2	145517-34-T79	EA	END CAP - OVERHEAD CABINET- WASHED MAPLE
2	145517-34-T80	EA	END CAP - OVERHEAD CABINET - SIERRA MAPLE
3	152173-02-T77	EA	CABINET - OVERHEAD/FRONT/LH HAND - W/O DOORS/HDW - PORTSMOUTH OAK
3	152173-02-T78	EA	CABINET - OVERHEAD/FRONT/LH HAND - W/O DOORS/HDW - CONCERT CHERRY
3	152173-02-T79	EA	CABINET - OVERHEAD/FRONT/LH HAND - W/O DOORS/HDW - WASHED MAPLE
3	152173-02-T80	EA	CABINET - OVERHEAD/FRONT/LH HAND - W/O DOORS/HDW - SIERRA MAPLE
4	152403-01-T77	EA	CABINET - OVERHEAD/FRONT/RH HAND - W/O DOORS/HDW - PORTSMOUTH OAK
4	152403-01-T78	EA	CABINET - OVERHEAD/FRONT/RH HAND - W/O DOORS/HDW - CONCERT CHERRY
4	152403-01-T79	EA	CABINET - OVERHEAD/FRONT/RH HAND - W/O DOORS/HDW - WASHED MAPLE
4	152403-01-T80	EA	CABINET - OVERHEAD/FRONT/RH HAND - W/O DOORS/HDW - SIERRA MAPLE
5	152403-02-T77	EA	CABINET - OVERHEAD/FRONT - W/O DOORS/HDW - PORTSMOUTH OAK
5	152403-02-T78	EA	CABINET - OVERHEAD/FRONT - W/O DOORS/HDW - CONCERT CHERRY
5	152403-02-T79	EA	CABINET - OVERHEAD/FRONT - W/O DOORS/HDW - WASHED MAPLE
5	152403-02-T80	EA	CABINET - OVERHEAD/FRONT - W/O DOORS/HDW - SIERRA MAPLE
6	152404-01-T77	EA	CABINET - FRONT/TV FACE - W/O DOORS/HDW - PORTSMOUTH OAK
6	152404-01-T78	EA	CABINET - FRONT/TV FACE - W/O DOORS/HDW - CONCERT CHERRY
6	152404-01-T79	EA	CABINET - FRONT/TV FACE - W/O DOORS/HDW - WASHED MAPLE
6	152404-01-T80	EA	CABINET - FRONT/TV FACE - W/O DOORS/HDW - SIERRA MAPLE
7	132909-16-T77	EA	PANEL - VINYL COVERED
8	132909-17-T77	EA	PANEL - VINYL COVERED
9	132909-20-T77	EA	PANEL - VINYL COVERED
10	146656-03-02B	EA	STRAP/TIEDOWN - TV - E-COATED
			FROM: 00-00-00 THRU: 10-09-05
	155314-02-02B	EA	BRACKET - TV - 32.6" - W/ANGLES - W/O FOAM TAPE - E-COATED
			FROM: 10-10-05 THRU: 99-99-99
11	152944-02-02B	EA	BRACKET - TIEDOWN/TV - E-COATED
12	150628-01-T77	EA	PANEL - VINYL COVERED - RIVERSTONE
12	150628-01-T81	EA	PANEL - VINYL COVERED - CASHMERE
13	150628-02-T77	EA	PANEL - VINYL COVERED - RIVERSTONE
13	150628-02-T81	EA	PANEL - VINYL COVERED - CASHMERE
14	150628-08-T77	EA	PANEL - VINYL COVERED - RIVERSTONE
14	150628-08-T81	EA	PANEL - VINYL COVERED - CASHMERE

COPYRIGHT © 2006 WINNEBAGO INDUSTRIES INC.

DRIVERS COMPARTMENT GROUP (CONTINUED)

CABINETS (CONTINUED)

KEY	PART NUMBER	U/M	DESCRIPTION
15	150628-09-T77	EA	PANEL - VINYL COVERED - RIVERSTONE - AUTOMATIC SATELLITE DISH
15	150628-09-T81	EA	PANEL - VINYL COVERED - CASHMERE - AUTOMATIC SATELLITE DISH
16	150628-10-T77	EA	PANEL - VINYL COVERED - RIVERSTONE - IN-MOTION SATELLITE SYSTEM
16	150628-10-T81	EA	PANEL - VINYL COVERED - CASHMERE - IN-MOTION SATELLITE SYSTEM
17	126841-09-000	EA	SHADE - PULL - CHARCOAL MESH - 40.25" X 60"
18	141522-C1-T89	EA	DOOR - ARCHED/PENCIL EDGE/HORIZ - 15.3" X 25.6" - W/O HDW - PORTSMOUTH OADK
18	141522-C1-T90	EA	DOOR - ARCHED/PENCIL EDGE/HORIZ - 15.3" X 25.6" - W/O HDW - CONCERT CHERRY
18	141522-C1-T91	EA	DOOR - ARCHED/PENCIL EDGE/HORIZ - 15.3" X 25.6" - W/O HDW - WASHED MAPLE
18	141522-C1-T92	EA	DOOR - ARCHED/PENCIL EDGE/HORIZ - 15.3" X 25.6" - W/O HDW - SIERRA MAPLE
19	146028-64-T89	EA	DOOR - GLASS INSERT/PENCIL EDGE - 15.7" X 21.8" - W/O HDW - PORTSMOUTH OAK
19	146028-64-T90	EA	DOOR - GLASS INSERT/PENCIL EDGE - 15.7" X 21.8" - W/O HDW - CONCERT CHERRY
19	146028-64-T91	EA	DOOR - GLASS INSERT/PENCIL EDGE - 15.7" X 21.8" - W/O HDW - WASHED MAPLE
19	146028-64-T92	EA	DOOR - GLASS INSERT/PENCIL EDGE - 15.7" X 21.8" - W/O HDW - SIERRA MAPLE

COPYRIGHT © 2006 WINNEBAGO INDUSTRIES INC.

DRIVERS COMPARTMENT GROUP (CONTINUED)

CABINETS (CONTINUED)

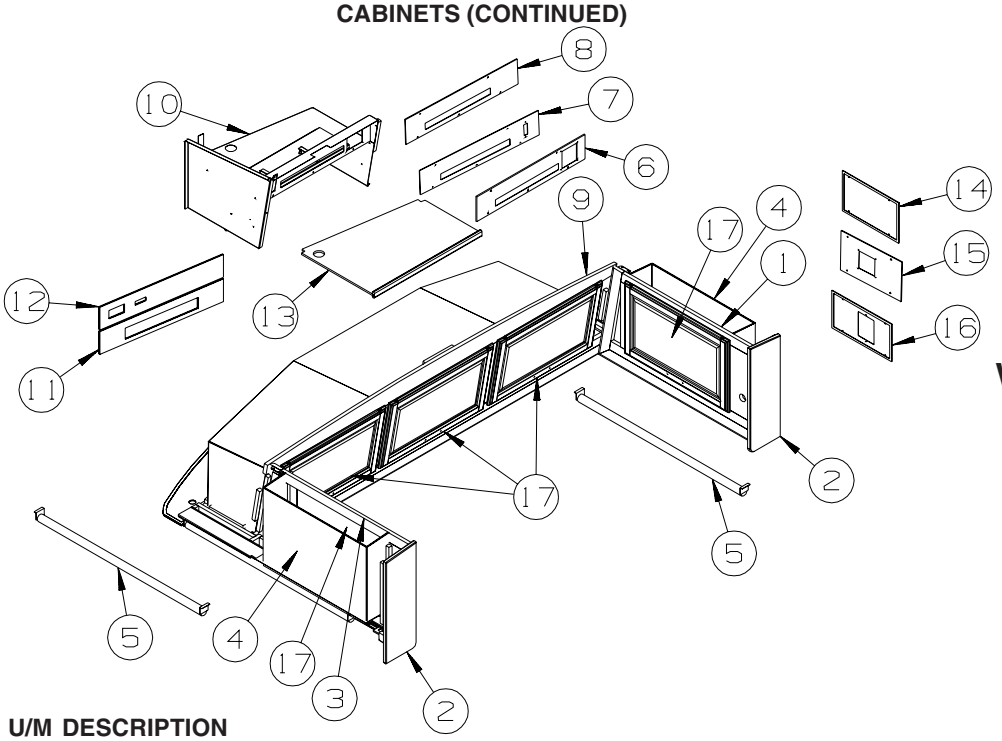

W/O FRONT TV

KEY	PART NUMBER	U/M	DESCRIPTION
1	152173-01-T77	EA	CABINET - OVERHEAD/FRONT/RH HAND - W/O DOORS/HDW - PORTSMOUTH OAK
1	152173-01-T78	EA	CABINET - OVERHEAD/FRONT/RH HAND - W/O DOORS/HDW - CONCERT CHERRY
1	152173-01-T79	EA	CABINET - OVERHEAD/FRONT/RH HAND - W/O DOORS/HDW - WASHED MAPLE
1	152173-01-T80	EA	CABINET - OVERHEAD/FRONT/RH HAND - W/O DOORS/HDW - SIERRA MAPLE
2	152173-02-T77	EA	CABINET - OVERHEAD/FRONT/LH HAND - W/O DOORS/HDW - PORTSMOUTH OAK
2	152173-02-T78	EA	CABINET - OVERHEAD/FRONT/LH HAND - W/O DOORS/HDW - CONCERT CHERRY
2	152173-02-T79	EA	CABINET - OVERHEAD/FRONT/LH HAND - W/O DOORS/HDW - WASHED MAPLE
2	152173-02-T80	EA	CABINET - OVERHEAD/FRONT/LH HAND - W/O DOORS/HDW - SIERRA MAPLE
3	145517-34-T77	EA	END CAP - OVERHEAD CABINET - PORTSMOUTH OAK
3	145517-34-T78	EA	END CAP - OVERHEAD CABINET - CONCERT CHERRY
3	145517-34-T79	EA	END CAP - OVERHEAD CABINET - WASHED MAPLE
3	145517-34-T80	EA	END CAP - OVERHEAD CABINET - SIERRA MAPLE
4	132909-20-T77	EA	PANEL - VINYL COVERED
5	126841-09-000	EA	SHADE - PULL - CHARCOAL MESH - 40.25" X 60"
6	153820-01-T77	EA	PANEL - VINYL COVERED - RIVERSTONE - AUTOMATIC SATELLITE SYSTEM
6	153820-01-T81	EA	PANEL - VINYL COVERED - CASHMERE - AUTOMATIC SATELLITE SYSTEM
7	153820-02-T77	EA	PANEL - VINYL COVERED - RIVERSTONE - IN-MOTION SATELLITE SYSTEM
7	153820-02-T81	EA	PANEL - VINYL COVERED - CASHMERE - IN-MOTION SATELLITE SYSTEM
8	153820-03-T77	EA	PANEL - VINYL COVERED - RIVERSTONE
8	153820-03-T81	EA	PANEL - VINYL COVERED - CASHMERE
9	153644-01-T77	EA	CABINET - OVERHEAD/FRONT - W/O DOORS/HDW - PORTSMOUTH OAK
9	153644-01-T78	EA	CABINET - OVERHEAD/FRONT - W/O DOORS/HDW - CONCERT CHERRY
9	153644-01-T79	EA	CABINET - OVERHEAD/FRONT - W/O DOORS/HDW - WASHED MAPLE
9	153644-01-T80	EA	CABINET - OVERHEAD/FRONT - W/O DOORS/HDW - SIERRA MAPLE
10	126275-09-02B	EA	SHELF - OVERHEAD/FRONT - E-COATED
11	132909-18-T77	EA	PANEL - VINYL COVERED - RH HAND
12	132909-19-T77	EA	PANEL - VINYL COVERED - RH HAND
13	155483-01-T77	EA	SHELF - VCR/RIGHT HAND - W/WOOD MOLDING - PORTSMOUTH OAK
13	155483-01-T78	EA	SHELF - VCR/RIGHT HAND - W/WOOD MOLDING - CONCERT CHERRY
13	155483-01-T79	EA	SHELF - VCR/RIGHT HAND - W/WOOD MOLDING - WASHED MAPLE
13	155483-01-T80	EA	SHELF - VCR/RIGHT HAND - W/WOOD MOLDING - SIERRA MAPLE
14	155127-01-TH0	EA	PANEL - VINYL COVERED - RIVERSTONE
14	155127-01-TG0	EA	PANEL - VINYL COVERED - CASHMERE
15	155127-02-TH0	EA	PANEL - VINYL COVERED - RIVERSTONE - AUTOMATIC SATELLITE SYSTEM
15	155127-02-TG0	EA	PANEL - VINYL COVERED - CASHMERE - AUTOMATIC SATELLITE SYSTEM
16	155127-03-TH0	EA	PANEL - VINYL COVERED - RIVERSTONE - IN-MOTION SATELLITE SYSTEM
16	155127-03-TG0	EA	PANEL - VINYL COVERED - CASHMERE - IN-MOTION SATELLITE SYSTEM
17	141522-C1-T89	EA	DOOR - ARCHED/PENCIL EDGE/HORIZ - 15.3" X 25.6" - W/O HDW - PORTSMOUTH OAK
17	141522-C1-T90	EA	DOOR - ARCHED/PENCIL EDGE/HORIZ - 15.3" X 25.6" - W/O HDW - CONCERT CHERRY
17	141522-C1-T91	EA	DOOR - ARCHED/PENCIL EDGE/HORIZ - 15.3" X 25.6" - W/O HDW - WASHED MAPLE
17	141522-C1-T92	EA	DOOR - ARCHED/PENCIL EDGE/HORIZ - 15.3" X 25.6" - W/O HDW - SIERRA MAPLE

COPYRIGHT © 2006 WINNEBAGO INDUSTRIES INC.

ELECTRICAL GROUP

110V BODY WIRING

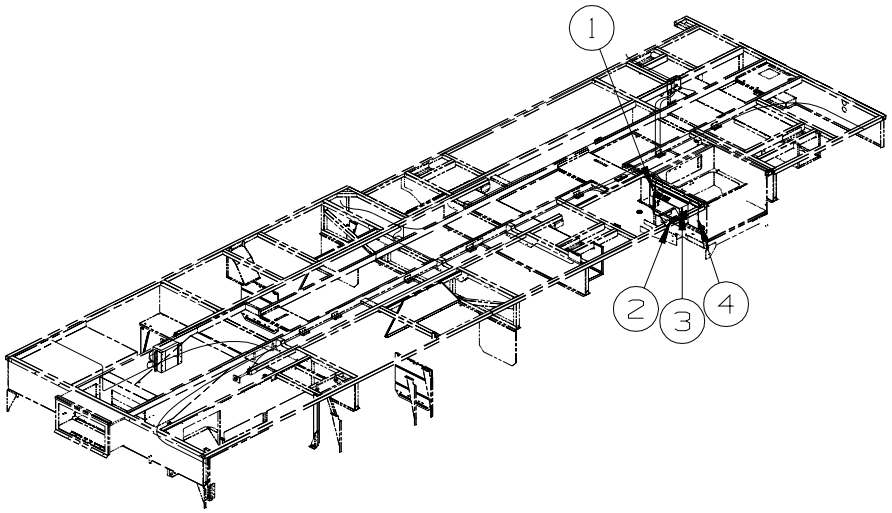

KEY	PART NUMBER	U/M	DESCRIPTION
1	058708-05-000	EA	RECEPTACLE - ELECTRICAL - SINGLE - BROWN
2	058708-01-000	EA	RECEPTACLE - ELECTRIC - DOUBLE - BROWN
3	154511-01-000	EA	INVERTER - 600 WATT - W/O REMOTE PANEL - INVERTER-DC/AC,600 WATT
4	154367-01-02B	EA	BRACKET/MOUNT - INVERTER - E-COATED

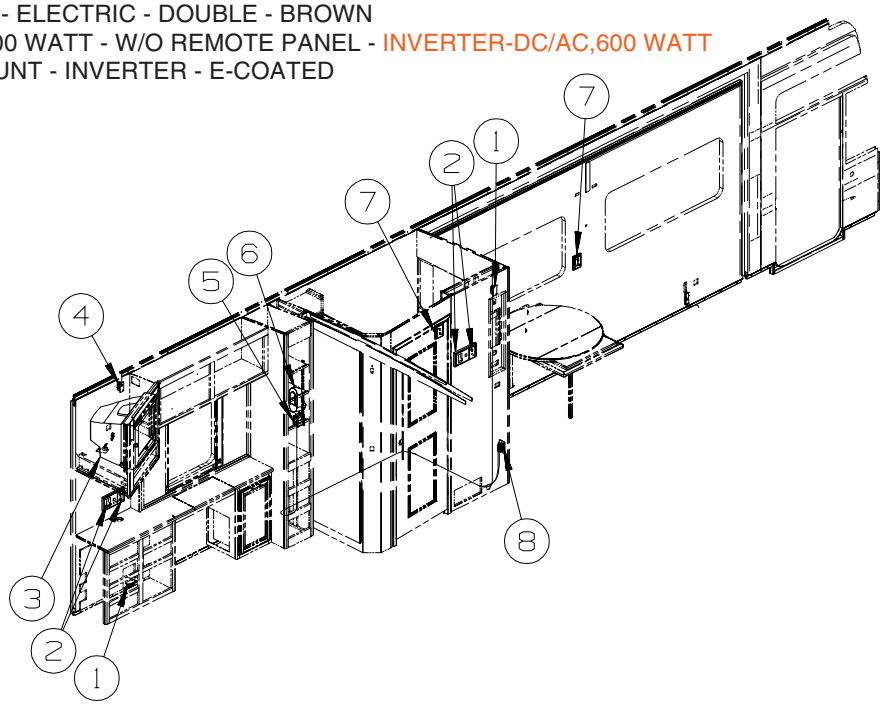

KEY	PART NUMBER	U/M	DESCRIPTION
1	058707-02-000	EA	RECEPTACLE - BLANK - JUNCTION BOX
2	058708-01-000	EA	RECEPTACLE - ELECTRIC - DOUBLE - BROWN
2	133713-06-08A	EA	SPACER/RECEPTACLE - PHONE - VINYL - PORTSMOUTH OAK
2	133713-06-24A	EA	SPACER/RECEPTACLE - PHONE - VINYL - CONCERT CHERRY
2	133713-06-21A	EA	SPACER/RECEPTACLE - PHONE - VINYL - WASHED MAPLE
2	133713-06-22A	EA	SPACER/RECEPTACLE - PHONE - VINYL - SIERRA MAPLE
3*	149049-02-000	EA	TV - 20" COLOR/STEREO - FLAT - SONY KV-20FS120
4	058707-01-000	EA	RECEPTACLE - ELECTRIC - SINGLE - BROWN
5	147446-01-02A	EA	RECEPTACLE - GFCI - 15A 125V - BROWN
6	155617-01-000	EA	HAIR DRYER - WALL MOUNT
			FROM: 00-00-00 THRU: 03-06-06
6	133068-01-000	EA	HAIR DRYER - 3 SPEED W/NIGHT LIGHT - WALL MOUNT
7	058708-01-000	EA	RECEPTACLE - ELECTRIC - DOUBLE - BROWN
7	133713-01-08A	EA	SPACER/RECEPTACLE - VINYL - PORTSMOUTH OAK
7	133713-01-24A	EA	SPACER/RECEPTACLE - VINYL - CONCERT CHERRY
7	133713-01-21A	EA	SPACER/RECEPTACLE - VINYL - WASHED MAPLE
7	133713-01-22A	EA	SPACER/RECEPTACLE - VINYL - SIERRA MAPLE
8	058708-01-000	EA	RECEPTACLE - ELECTRIC - DOUBLE - BROWN

***COMPONENT PARTS LISTED LATER IN THIS GROUP**

COPYRIGHT © 2006 WINNEBAGO INDUSTRIES INC.

ELECTRICAL GROUP (CONTINUED)

110V BODY WIRING (CONTINUED)

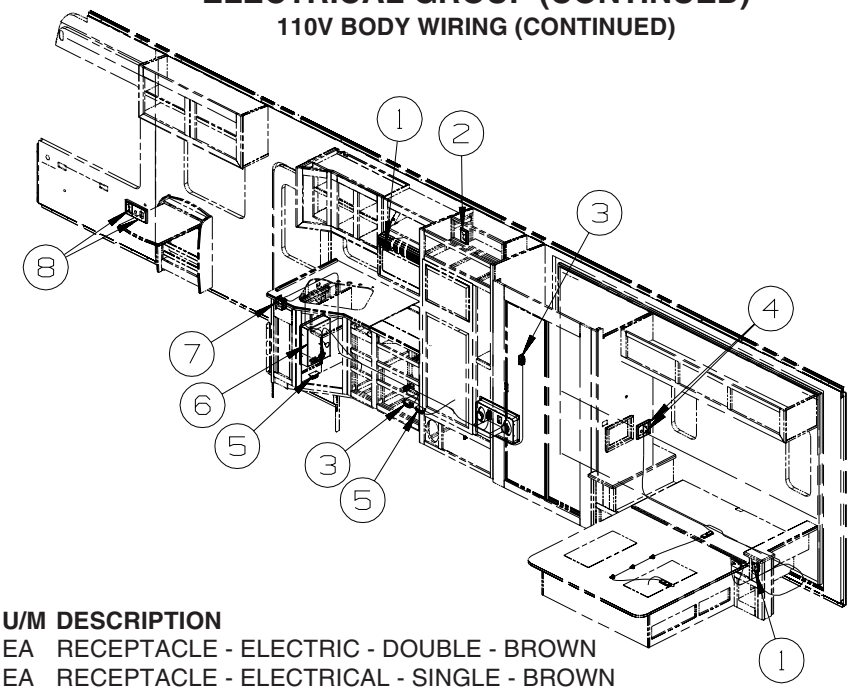

KEY	PART NUMBER	U/M	DESCRIPTION
1	058708-01-000	EA	RECEPTACLE - ELECTRIC - DOUBLE - BROWN
2	058708-05-000	EA	RECEPTACLE - ELECTRICAL - SINGLE - BROWN
2	133713-01-08A	EA	SPACER/RECEPTACLE - VINYL - PORTSMOUTH OAK
2	133713-01-24A	EA	SPACER/RECEPTACLE - VINYL - CONCERT CHERRY
2	133713-01-21A	EA	SPACER/RECEPTACLE - VINYL - WASHED MAPLE
2	133713-01-22A	EA	SPACER/RECEPTACLE - VINYL - SIERRA MAPLE
3	058707-01-000	EA	RECEPTACLE - ELECTRIC - SINGLE - BROWN
4	058708-01-000	EA	RECEPTACLE - ELECTRIC - DOUBLE - BROWN
4	133713-04-08A	EA	SPACER/RECEPTACLE - VINYL - PORTSMOUTH OAK
4	133713-04-24A	EA	SPACER/RECEPTACLE - VINYL - CONCERT CHERRY
4	133713-04-21A	EA	SPACER/RECEPTACLE - VINYL - WASHED MAPLE
4	133713-04-22A	EA	SPACER/RECEPTACLE - VINYL - SIERRA MAPLE
5	058707-02-000	EA	RECEPTACLE - BLANK - JUNCTION BOX
6	095721-46-000	EA	LABEL - CONTROL CENTER - 30 AMP
6	095721-47-000	EA	LABEL - CONTROL CENTER - 50 AMP
7	147446-01-02A	EA	RECEPTACLE - GFCI - 15A 125V - BROWN
8	058708-01-000	EA	RECEPTACLE - ELECTRIC - DOUBLE - BROWN
8	133713-06-08A	EA	SPACER/RECEPTACLE - PHONE - VINYL - PORTSMOUTH OAK
8	133713-06-24A	EA	SPACER/RECEPTACLE - PHONE - VINYL - CONCERT CHERRY
8	133713-06-21A	EA	SPACER/RECEPTACLE - PHONE - VINYL - WASHED MAPLE
8	133713-06-22A	EA	SPACER/RECEPTACLE - PHONE - VINYL - SIERRA MAPLE

COPYRIGHT © 2006 WINNEBAGO INDUSTRIES INC.

ELECTRICAL GROUP (CONTINUED)

12V BODY WIRING

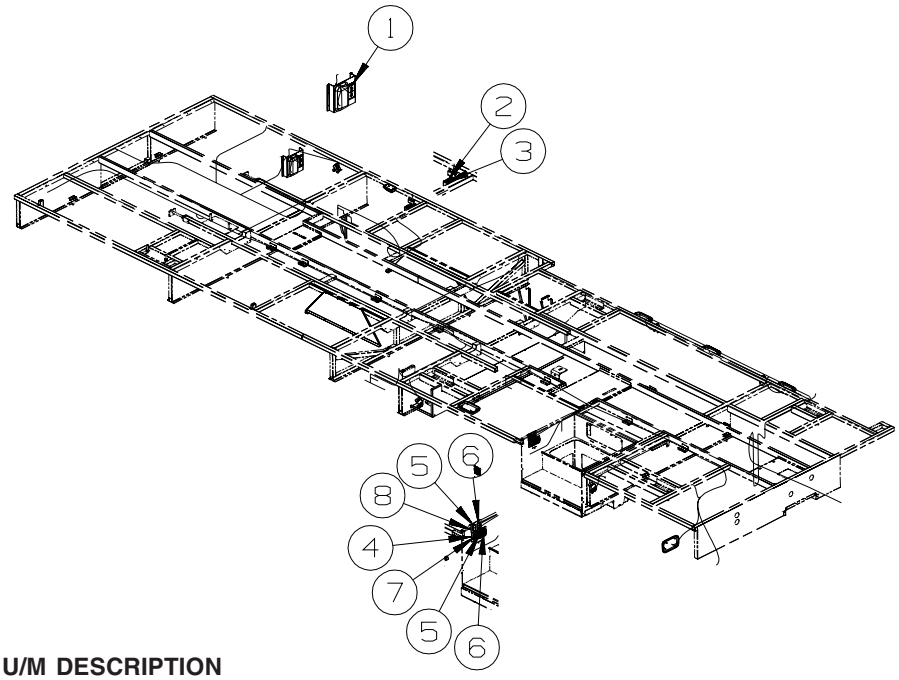

KEY	PART NUMBER	U/M	DESCRIPTION
1	149557-01-01A	EA	PLATE/WALL - PHONE/DUAL COAXIAL/VERTICAL - WHITE
2	108357-01-000	EA	SWITCH - ROCKER - SPST - ON/OFF - 2 TERMINAL - W/O COVER
2	108356-02-01A	EA	COVER/ACTUATOR SWITCH - 2 ROWS DIMPLES - BLACK
2	108355-01-000	EA	HOUSING - SWITCH
3	108357-15-000	EA	SWITCH - ROCKER - DPDT - ON/NONE/ON - W/LIGHT W/O COVER
3	108356-04-01A	EA	COVER/ACTUATOR SWITCH - 2 ROWS DIMPLES W/LENS - BLACK
3	108355-01-000	EA	HOUSING - SWITCH
4	098351-23-02A	EA	PLATE/SWITCH - 3 GANG - CHROME
5	108357-06-000	EA	SWITCH - ROCKER - DPDT - MOM/OFF/MOM - 6 TERM - W/O COVER
5	108356-11-01A	EA	COVER/ACTUATOR SWITCH - 3 GROOVES - AUX BATT - BLACK
5	108355-01-000	EA	HOUSING - SWITCH
6	108357-01-000	EA	SWITCH - ROCKER - SPST - ON/OFF - 2 TERMINAL - W/O COVER
6	108356-14-01A	EA	COVER/ACTUATOR SWITCH - 3 GROOVES - COMPT LIGHTS
6	108355-01-000	EA	HOUSING - SWITCH
7	108357-07-000	EA	SWITCH - ROCKER - SPDT - MOM/OFF/MOM - 3 TERM - W/O COVER
7	108356-12-01A	EA	COVER/ACTUATOR SWITCH - 3 GROOVES - AWNING/IN/OUT
7	108355-01-000	EA	HOUSING - SWITCH
8	098351-22-02A	EA	PLATE/SWITCH - 2 GANG - CHROME

COPYRIGHT © 2006 WINNEBAGO INDUSTRIES INC.

ELECTRICAL GROUP (CONTINUED)

12V BODY WIRING (CONTINUED)

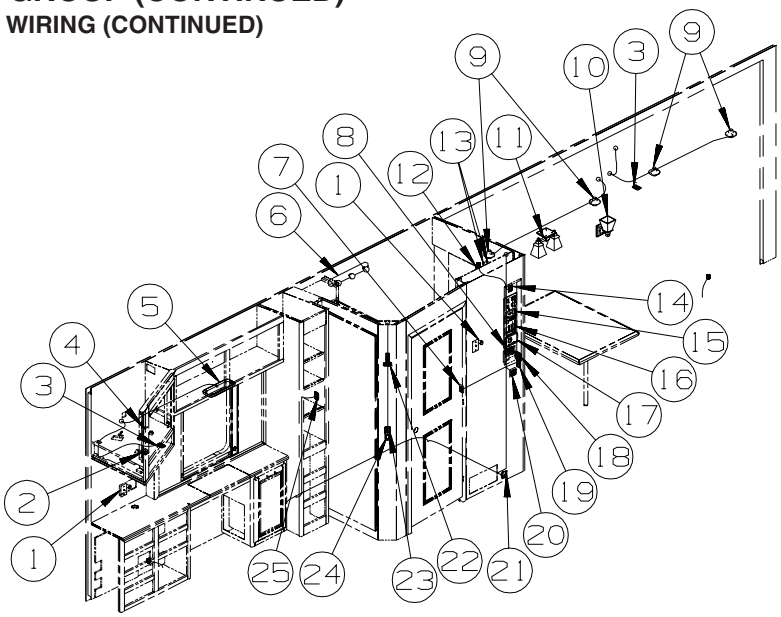

KEY	PART NUMBER	U/M	DESCRIPTION
1	093253-01-02A	EA	PLATE - WALL - TELEPHONE - BROWN
1	132958-01-000	EA	RECEPTACLE - 12 VOLT - MOUNTING FLANGE - BLACK
2*	123775-01-02A	EA	LIGHT - HALOGEN - ROUND - SATIN NICKEL
3	135740-01-01A	EA	SWITCH - ROCKER - SPST - ON/OFF - BROWN
3	135741-01-01A	EA	SWITCH - BASE - SINGLE - BROWN
3	135742-01-01A	EA	BEZEL - SWITCH - SINGLE - BROWN
4	149750-01-000	EA	RECEIVER - (INFRA RED SIGNAL) - W/6"LEAD/PLUG
5*	137417-05-01A	EA	LIGHT - DOME - DOUBLE - W/SWITCH/OPTIC LENS - WHITE
6	138116-01-02A	EA	LIGHT/MAKE UP - 3 BULB - CURVED - W/O BULB - SATIN NICKEL
6	123918-01-000	EA	BULB - 12V - MAKEUP - WHITE
7	135740-01-01A	EA	SWITCH - ROCKER - SPST - ON/OFF - BROWN
7	135741-01-01A	EA	SWITCH - BASE - SINGLE - BROWN
7	135742-10-02A	EA	BEZEL - SWITCH - SHOWER - BROWN
8	154511-02-000	EA	REMOTE/PANEL - INVERTER/600 WATT - INVERTER-DC/AC,600 WATT
8	148254-03-000	EA	CABLE/INVERTOR - W/8 PIN MODULAR PHONE JACK - 50'-DIMEN - INVERTER-DC/AC,600 WATT
9	132427-01-02A	EA	LIGHT - READING/SWIVEL - ROUND - NICKEL
10	119258-35-03A	EA	LAMP - WALL - SATIN NICKEL
10	117805-02-000	EA	BULB - 12V - #921 - 1.4 AMPS
11*	093575-23-03A	EA	LIGHT - CEILING/DOUBLE - SATIN NICKEL
11	117805-02-000	EA	BULB - 12V - #921 - 1.4 AMPS
12	086756-01-000	EA	SPLITTER - TV/2 WAY
13	082134-01-000	EA	ADAPTER - TV - CABLE TO CABLE
14	135740-06-01A	EA	SWITCH - ROCKER - ON/OFF - LIGHTED - RED
14	135741-01-01A	EA	SWITCH - BASE - SINGLE - BROWN
14	135742-35-02A	EA	BEZEL - SWITCH - WATER HEATER/110 VOLT - BROWN
15*	133004-05-01A	EA	PANEL/MONITOR-2 TANK-DIGITAL VOLT MT/SOLAR-W/WATER HTR SWT
16	127002-10-000	EA	PANEL/MONITOR - ENERGY MANAGEMENT SYSTEMS CTRL - W/3 PLUG
17	105620-18-000	EA	THERMOSTAT - FURNACE/HEAT PUMP-A/C - W/CHOKE MODULE
18	135740-01-01A	EA	SWITCH - ROCKER - SPST - ON/OFF - BROWN
18	135741-02-01A	EA	SWITCH - BASE - DOUBLE - BROWN
18	135742-49-02A	EA	BEZEL - SWITCH - ACCENT/FAN - BROWN
19	135740-01-01A	EA	SWITCH - ROCKER - SPST - ON/OFF - BROWN
19	135741-01-01A	EA	SWITCH - BASE - SINGLE - BROWN
19	135742-30-02A	EA	BEZEL - SWITCH - MONITOR - BROWN
20	135740-01-01A	EA	SWITCH - ROCKER - SPST - ON/OFF - BROWN - MONITOR
20	135740-02-01A	EA	SWITCH - ROCKER - SPDT - ON/ON - BROWN - CEILING
20	135741-02-01A	EA	SWITCH - BASE - DOUBLE - BROWN
20	135742-31-02A	EA	BEZEL - SWITCH - CEILING/MONITOR - BROWN
21*	108354-01-01A	EA	LIGHT - COURTESY
22	144363-09-02B	EA	PLATE - SWITCH - E-COATED
22	108357-06-000	EA	SWITCH - ROCKER - DPDT - MOM/OFF/MOM - 6 TERM - W/O COVER
22	108356-02-01A	EA	COVER/ACTUATOR SWITCH - 2 ROWS DIMPLES - BLACK
22	108355-01-000	EA	HOUSING - SWITCH
22	116220-01-000	EA	APPLIQUE - SWITCH/SLIDEOUT
22	116549-02-000	EA	LABEL - WARNING - SLIDEOUT

COPYRIGHT © 2006 WINNEBAGO INDUSTRIES INC.

ELECTRICAL GROUP (CONTINUED)

12V BODY WIRING (CONTINUED)

KEY	PART NUMBER	U/M	DESCRIPTION
23	135740-01-01A	EA	SWITCH - ROCKER - SPST - ON/OFF - BROWN
23	135741-01-01A	EA	SWITCH - BASE - SINGLE - BROWN
23	135742-12-02A	EA	BEZEL - SWITCH - FAN - BROWN
24	135740-02-01A	EA	SWITCH - ROCKER - SPDT - ON/ON - BROWN
24	135741-01-01A	EA	SWITCH - BASE - SINGLE - BROWN
24	135742-07-02A	EA	BEZEL - SWITCH - CEILING - BROWN
25	135740-01-01A	EA	SWITCH - ROCKER - SPST - ON/OFF - BROWN
25	135741-01-01A	EA	SWITCH - BASE - SINGLE - BROWN
25	135742-08-02A	EA	BEZEL - SWITCH - MAKEUP - BROWN

***COMPONENT PARTS LISTED LATER IN THIS GROUP**

COPYRIGHT © 2006 WINNEBAGO INDUSTRIES INC.

ELECTRICAL GROUP (CONTINUED)

12V BODY WIRING (CONTINUED)

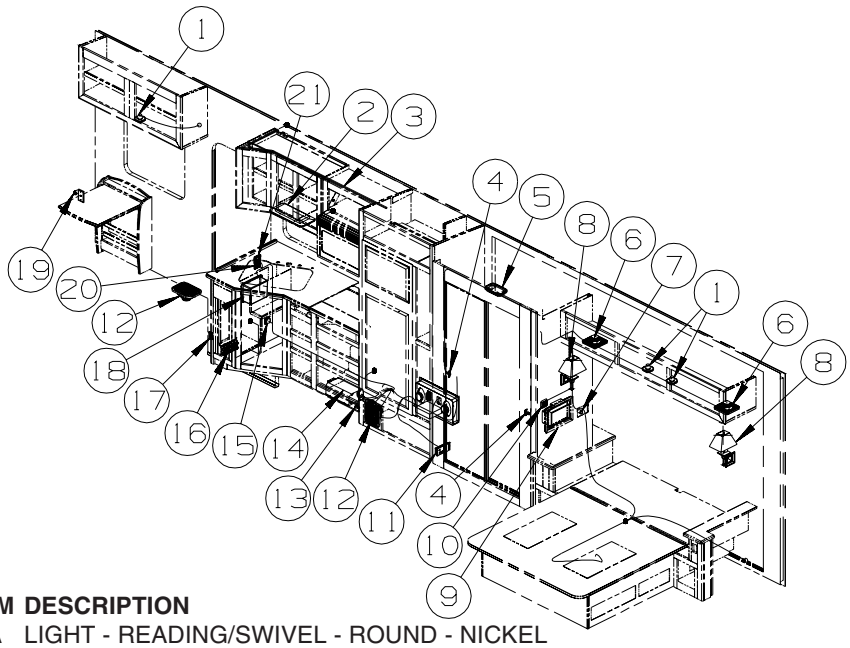

KEY	PART NUMBER	U/M	DESCRIPTION
1	132427-01-02A	EA	LIGHT - READING/SWIVEL - ROUND - NICKEL
2*	153464-05-01A	EA	LIGHT-FLUORESCENT 16.1"- RECESSED/WARM WHT BULB - W/SWITCH
3	146514-03-000	FT	LIGHT - FLEX - ROPE/ROUND - W/O MOUNT CHANNEL
3	146514-04-000	EA	CHANNEL/MOUNT - F/ROPE LIGHT
3	146514-02-000	EA	CONNECTOR - LIGHT
4	041250-01-000	EA	SWITCH - PUSH BUTTON/DOOR JAMB - METAL/CHROME
5*	137417-03-01A	EA	LIGHT - DOME - SINGLE - W/O SWITCH - W/FROSTED LENS-WHITE
6	094097-01-000	EA	SPEAKER - RADIO/TV - W/O GRILLE - 5.25" DIAMETER - STEREO SYSTEM W/CD REAR
6	089340-02-000	EA	GRILLE - SPEAKER - 6.5" SQUARE - STEREO SYSTEM W/CD REAR
7	132958-01-000	EA	RECEPTACLE - 12 VOLT - MOUNTING FLANGE - BLACK
8	119258-37-03A	EA	LAMP - WALL - SATIN NICKEL
8	119257-18-01A	EA	SHADE - LAMP - PARCHMENT
8	067479-01-000	EA	BULB - 12V - #1076 - 1.80 AMP
9	133307-02-000	EA	RADIO - WALL MOUNT - CD W/ALARM - AUDIOVOX AWN-930 - STEREO SYSTEM W/CD REAR
10	135740-01-01A	EA	SWITCH - ROCKER - SPST - ON/OFF - BROWN
10	135741-01-01A	EA	SWITCH - BASE - SINGLE - BROWN
10	135742-06-02A	EA	BEZEL - SWITCH - AISLE - BROWN
10	137889-01-000	EA	SWITCH - LIGHT DIMMER
11	150138-01-01A	EA	DETECTOR - LP GAS - WHITE
12	150090-01-000	EA	SPEAKER - 6" X 9" - SUB-WOOFER - MAGNADYNE LS69W
12	151569-01-01A	EA	GRILLE - SPEAKER - 6" X 9" - SUB WOOFER - BLACK
13	086233-01-000	EA	STUD - ISOLATED - 3/8" X 7/8" LONG
14	123058-01-000	EA	CONVERTER - 55 AMP - ELECTRONIC - 4 1/8"H X 7"W X 12 3/8"L
15*	108354-01-01A	EA	LIGHT - COURTESY
16	092547-10-000	EA	LABEL - CIRCUIT BREAKER
17	116995-02-000	EA	SWITCH/MAGNET - ELECTRIC STEP - BLACK/WHITE- NORMALLY OPEN
17	116995-03-000	EA	SWITCH/MAGNET - ELECTRIC STEP - FULL BODY PAINT
18	141679-03-000	EA	CHARGER/DOCK STATION ONLY - FOR #GMRS100 TWO-WAY RADIO
18	141679-04-000	EA	RADIO/TWO-WAY W/BATTERY (EACH = 1) - 5 MILE - ASA GMRS100 FROM: 00-00-00 THRU: 12-04-05
18	141679-05-000	EA	RADIO/TWO-WAY W/BATTERY (EACH = 1) - 9 MILE - ASA GMRS200 FROM: 12-05-05 THRU: 99-99-99
19	093253-01-02A	EA	PLATE - WALL - TELEPHONE - BROWN
19	132958-01-000	EA	RECEPTACLE - 12 VOLT - MOUNTING FLANGE - BLACK
20	135740-01-01A	EA	SWITCH - ROCKER - SPST - ON/OFF - BROWN
20	135741-01-01A	EA	SWITCH - BASE - SINGLE - BROWN
20	135742-11-02A	EA	BEZEL - SWITCH - STEP - BROWN
21	135740-01-01A	EA	SWITCH - ROCKER - SPST - ON/OFF - BROWN
21	135741-02-01A	EA	SWITCH - BASE - DOUBLE - BROWN
21	135742-19-02A	EA	BEZEL - SWITCH - CEILING/PORCH - BROWN

***COMPONENT PARTS LISTED LATER IN THIS GROUP**

COPYRIGHT © 2006 WINNEBAGO INDUSTRIES INC.

ELECTRICAL GROUP (CONTINUED)

12V BODY WIRING (CONTINUED)

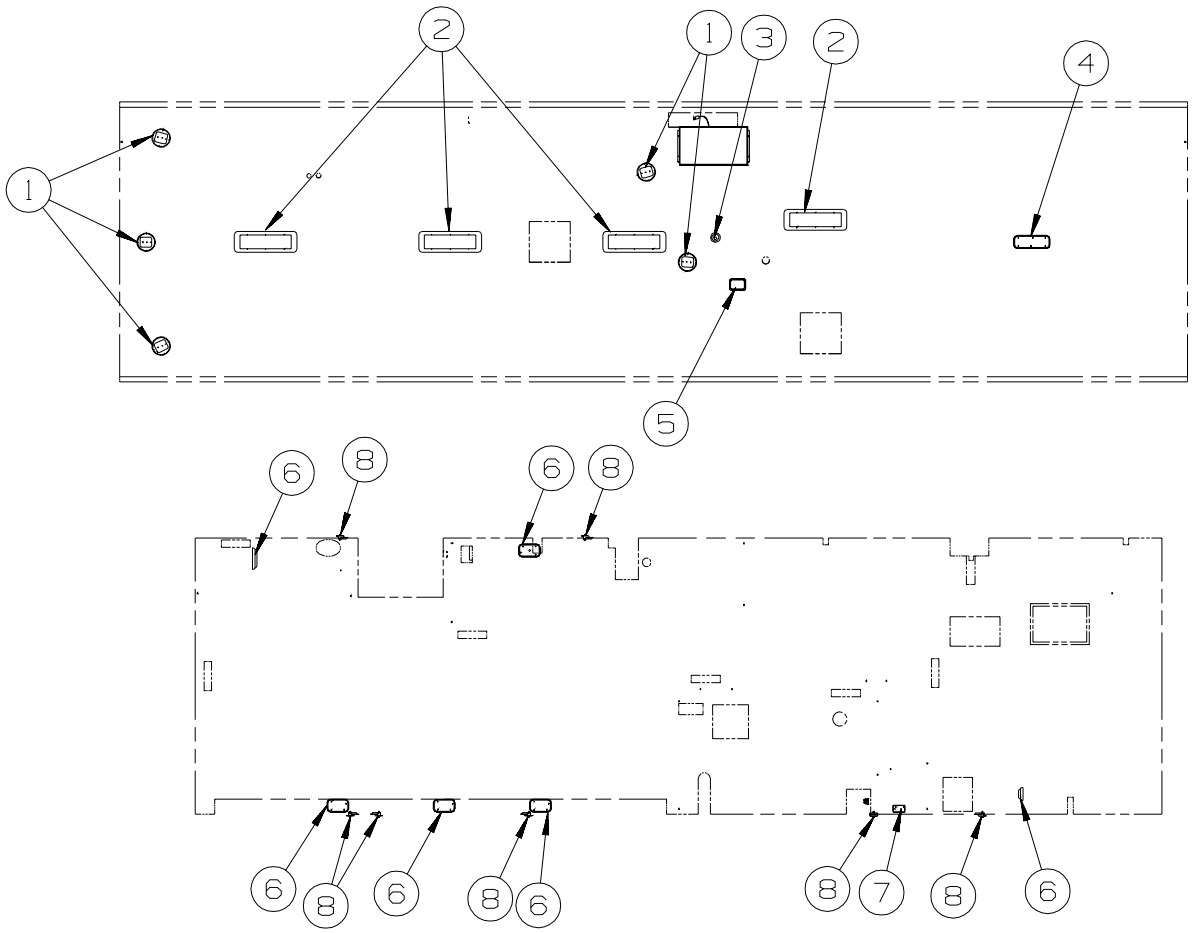

KEY	PART NUMBER	U/M	DESCRIPTION
1	151314-01-01A	EA	SPEAKER - CUBE/CEILING - WHITE - MAGNADYNE - LS3CM-WN
2*	153464-06-01A	EA	LIGHT-FLUORESCENT 21.8"- RECESSED/WARM WHT BULB-W/O SWITCH
3	146048-01-01A	EA	LIGHT - HALOGEN/ADJUSTABLE - WHITE
4*	093575-33-03A	EA	LIGHT - CEILING/ROUND - W/O BULBS - SATIN NICKEL
4	117805-02-000	EA	BULB - 12V - #921 - 1.4 AMPS
5*	121935-01-01A	EA	LIGHT - DOME - SHOWER
6*	137417-03-01A	EA	LIGHT - DOME - SINGLE - W/O SWITCH - W/FROSTED LENS-WHITE
7*	086280-01-000	EA	LIGHT - SURFACE MOUNT - 12 VOLT
8	041250-01-000	EA	SWITCH - PUSH BUTTON/DOOR JAMB - METAL/CHROME
8	138494-01-02B	EA	BRACKET - SWITCH/LIGHT - E-COATED

***COMPONENT PARTS LISTED LATER IN THIS GROUP**

COPYRIGHT © 2006 WINNEBAGO INDUSTRIES INC.

ELECTRICAL GROUP (CONTINUED)

12V BODY WIRING (CONTINUED)

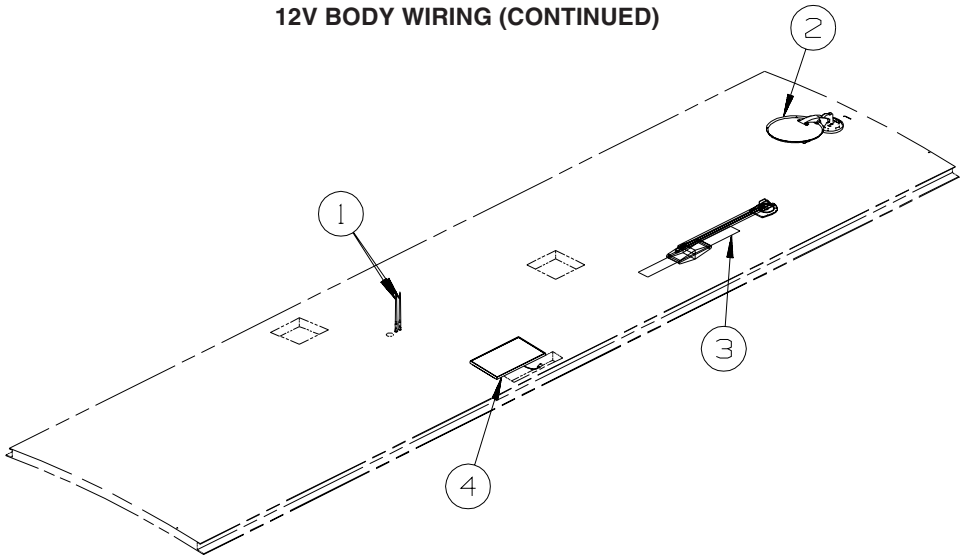

KEY	PART NUMBER	U/M	DESCRIPTION
1	090944-01-000	EA	ANTENNA - RADIO - 16" RUBBER - W/72" LEAD WIRE
1	109889-04-000	EA	EXTENDER - ANTENNA SHAFT - 3.7"
1	147741-01-09B	EA	BRACKET - ANTENNA GROUND - GALVANIZED
2*	141454-03-01A	EA	ANTENNA/SATELLITE - “AUTO SEARCH WHILE PARKED/GPS SYSTEM” - SATELLITE DISH-AUTOMATIC
2*	137135-02-000	EA	ANTENNA - SATELLITE DSS - W/SENSOR - SATELLITE DISH & ELEV.SENSOR
2	154474-01-01A	EA	ANTENNA/SATELLITE - DISH IN DOME/SEARCH IN MOTION - WHITE - SAT SYS IN-MOTION W/O RCVR FROM: 00-00-00 THRU: 12-04-05
2	154474-04-01A	EA	ANTENNA/SATELLITE - DISH IN DOME/SEARCH IN MOTION - WHITE - SAT SYS IN-MOTION W/O RCVR FROM: 12-05-05 THRU: 99-99-99
2	154474-01-02A	EA	ANT/SAT-DISH IN DOME/SEARCH IN MOTION-BLK-FULL BODY PAINT/ SAT SYS IN-MOTION W/O RCVR FROM: 00-00-00 THRU: 12-04-05
2	154474-04-02A	EA	ANT/SAT-DISH IN DOME/SEARCH IN MOTION-BLK-FULL BODY PAINT/ SAT SYS IN-MOTION W/O RCVR FROM: 12-05-05 THRU: 99-99-99
2	154474-02-000	EA	CONTROL/SATELLITE KIT-IDB BOX/IDD BOX-POWER SUPPLY-CABLE-SAT SYS IN-MOTION W/O RCVR
2	154474-03-000	EA	CABLE - SATELLITE - COAX - 8' W/CONNECTORS - SAT SYS IN-MOTION W/O RCVR
2	146488-01-000	EA	PLATE - ROOF - CABLE ENTRY - SAT SYS IN-MOTION W/O RCVR
3*	076319-23-000	EA	ANTENNA - TV ROOF MOUNT - 44.5" MAST
3*	076319-25-000	EA	KIT - HARDWARE INTERIOR
3	069726-02-000	EA	BUMPER - .88" OD X .40" THICK - BLACK
4	151647-01-000	EA	PANEL - SOLAR 10 WATT

***COMPONENT PARTS LISTED LATER IN THIS GROUP**

COPYRIGHT © 2006 WINNEBAGO INDUSTRIES INC.

ELECTRICAL GROUP (CONTINUED)

12V BODY WIRING (CONTINUED)

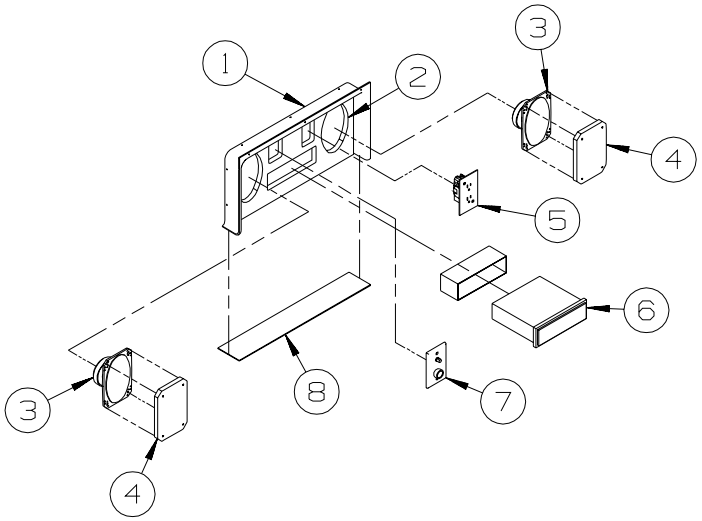

EXTERIOR ENTERTAINMENT

KEY	PART NUMBER	U/M	DESCRIPTION
1	124696-02-01A	EA	BOX-ENTERTAINMENT CTR/EXT-19.4"W X 10"H X 2.5"D - BRT WHT
	124696-01-01A	EA	BOX-ENTERTAINMENT CTR/EXT-19.4"W X 10"H X 10.2"D W/CUTOUTS
2	127409-02-L15	EA	PLATE - RADIO MOUNTING
3	110469-01-000	EA	SPEAKER - 4" X 6" OVAL - COAXIAL
4	110470-01-01A	EA	GRILLE - 4" X 6" - OVAL SPEAKER - BLACK
5	058708-01-000	EA	RECEPTACLE - ELECTRIC - DOUBLE - BROWN
6*	148231-01-000	EA	RADIO - AM/FM CD - W/REMOTE - MAGNADYNE M3100CD FROM: 00-00-00 THRU: 04-11-05
6*	155619-01-000	EA	RADIO - AM/FM CD - W/REMOTE - MAGNADYNE M3200CD FROM: 04-12-05 THRU: 99-99-99
7	076319-09-000	EA	WALLPLATE - TV CABLE RECEPTACLE - SINGLE - BROWN
8	104898-01-02A	EA	PLATE - PLASTIC BOTTOM - BRIGHT WHITE

***COMPONENT PARTS LISTED LATER IN THIS GROUP**

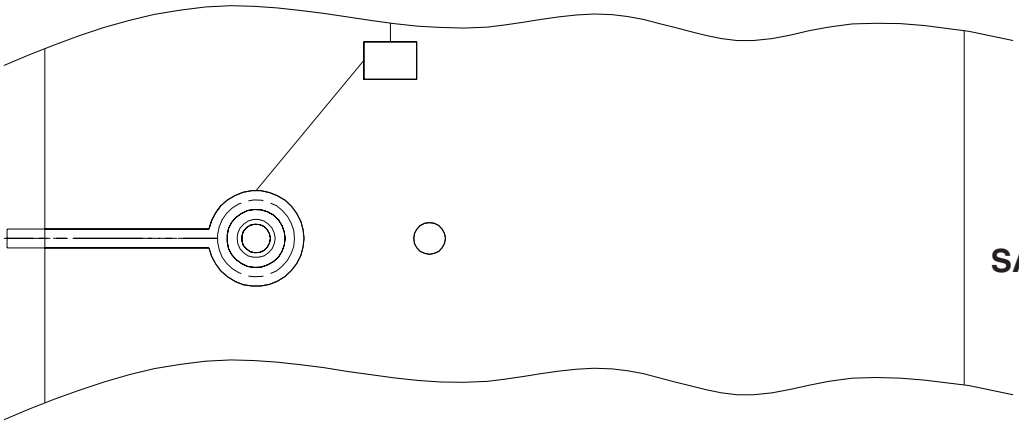

SATELLITE WIRING DETAIL ON ROOF

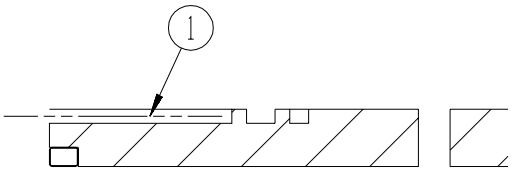

KEY	PART NUMBER	U/M	DESCRIPTION
1	154474-03-000	EA	CABLE - SATELLITE - COAX - 8' W/CONNECTORS

COPYRIGHT © 2006 WINNEBAGO INDUSTRIES INC.

ELECTRICAL GROUP (CONTINUED)

EXTERIOR LAMPS

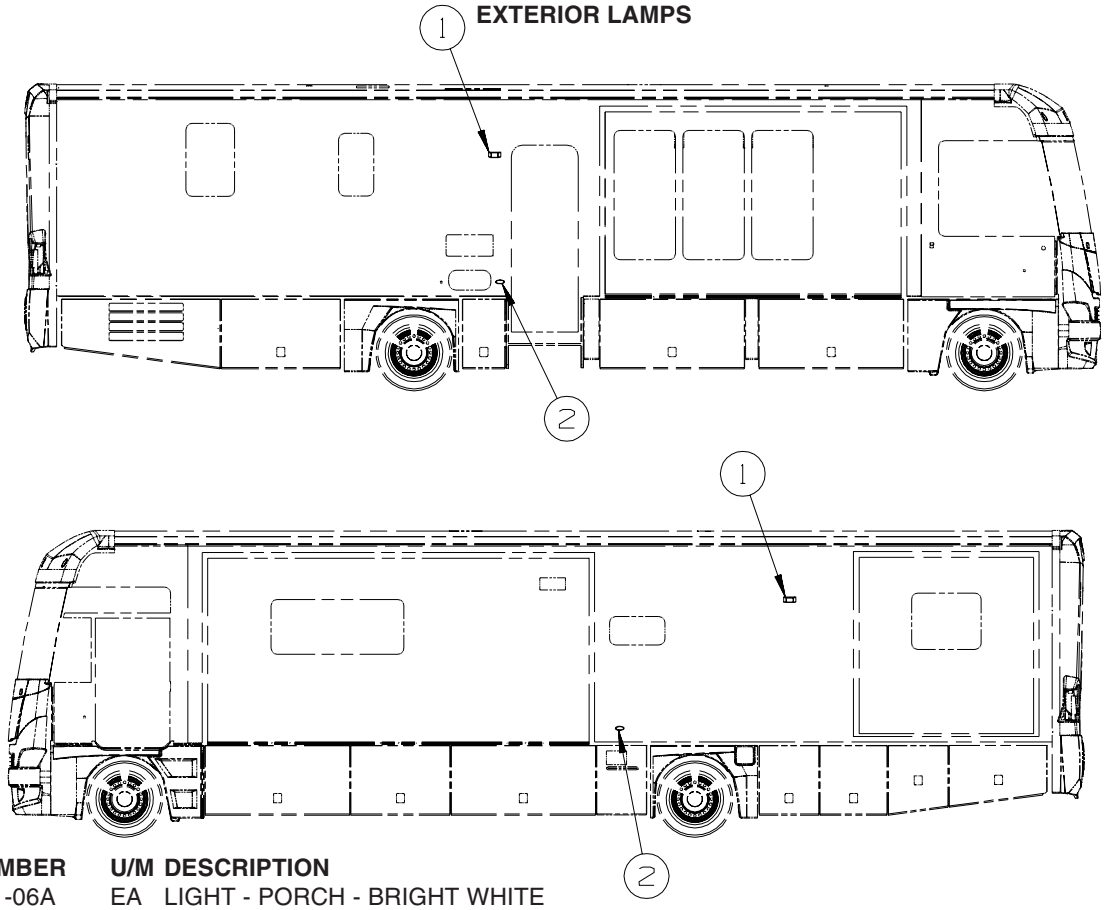

KEY	PART NUMBER	U/M	DESCRIPTION
1*	097917-01-06A	EA	LIGHT - PORCH - BRIGHT WHITE
1	097917-01-08A	EA	LIGHT - PORCH - CHROME - FULL BODY PAINT
	008215-01-000	EA	BULB - 12 VOLT - #1003 - .94 AMP
2	147680-01-01A	EA	BASE - MARKER LAMP - WHITE
	036196-01-000	EA	BULB - 12V - #194 - .27 AMP - BAYONETTE
2	147680-02-01A	EA	LAMP - MARKER - LENS - AMBER

***COMPONENT PARTS LISTED LATER IN THIS GROUP**

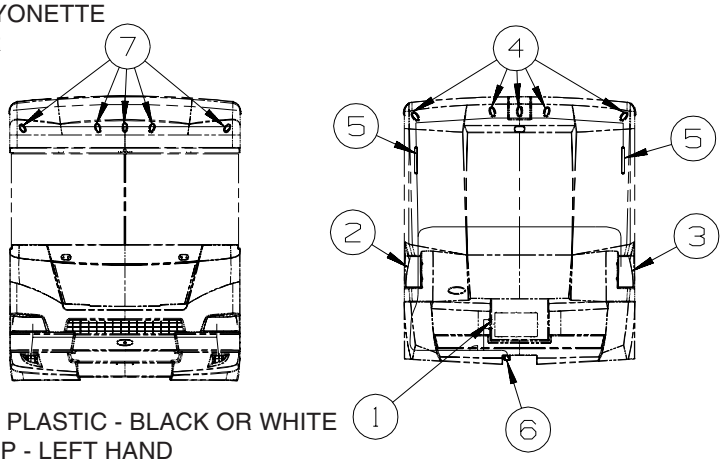

KEY	PART NUMBER	U/M	DESCRIPTION
1	087201-01-000	EA	LIGHT - HALF ROUND - 1" X 1.7" - PLASTIC - BLACK OR WHITE
2	154206-04-000	EA	LAMP - STOP/TURN/TAIL/BACK UP - LEFT HAND
2	112708-01-000	EA	BULB - 12 VOLT - #3157 - .59/2.10 AMP
2	112709-02-000	EA	SOCKET - BACK-UP LIGHT
2	112709-03-000	EA	SOCKET - BRAKE LIGHT/MARKER LIGHT
2	112707-01-000	EA	BULB - 12 VOLT - #3156 - 2.10 AMP
3	154206-03-000	EA	LAMP - STOP/TURN/TAIL/BACK UP - RIGHT HAND
3	112708-01-000	EA	BULB - 12 VOLT - #3157 - .59/2.10 AMP
3	112709-02-000	EA	SOCKET - BACK-UP LIGHT
3	112709-03-000	EA	SOCKET - BRAKE LIGHT/MARKER LIGHT
3	112707-01-000	EA	BULB - 12 VOLT - #3156 - 2.10 AMP
4	147680-01-01A	EA	BASE - MARKER LAMP - WHITE
4	147680-03-01A	EA	LAMP - MARKER - LENS - RED
5	151076-01-000	EA	LIGHT - BRAKE - CENTER MOUNT
6	146246-01-000	EA	CONNECTOR/PLUG - TRAILER - 7 PIN
6	151080-01-000	EA	CONNECTOR - PLUG - TRAILER - 7 SOCKET
7	147680-01-01A	EA	BASE - MARKER LAMP - WHITE
7	147680-02-01A	EA	LAMP - MARKER - LENS - AMBER

COPYRIGHT © 2006 WINNEBAGO INDUSTRIES INC.

ELECTRICAL GROUP (CONTINUED)

EXTERIOR LAMPS (CONTINUED)

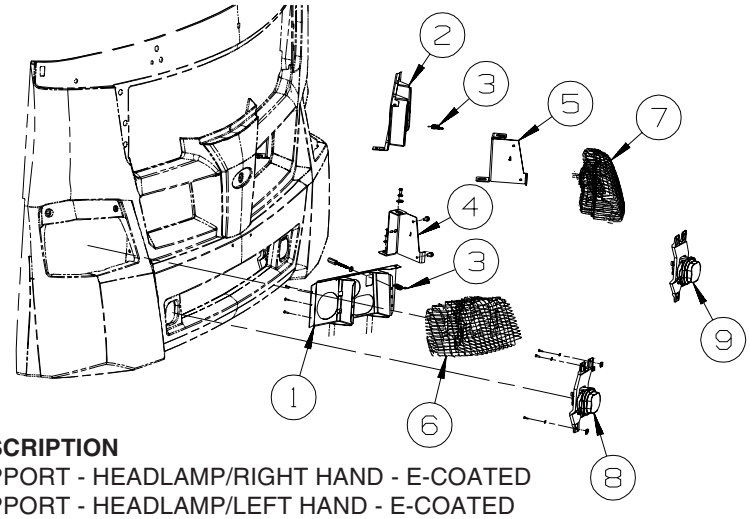

KEY	PART NUMBER	U/M	DESCRIPTION
1	154324-01-02B	EA	SUPPORT - HEADLAMP/RIGHT HAND - E-COATED
2	154324-02-02B	EA	SUPPORT - HEADLAMP/LEFT HAND - E-COATED
3	049359-01-000	EA	SPRING - RETAINER - HEADLAMP - GM #496096
4	154328-01-02B	EA	BRACKET - ADJUSTMENT/RIGHT HAND - E-COATED
5	154328-02-02B	EA	BRACKET - ADJUSTMENT/LEFT HAND - E-COATED
6	154881-01-000	EA	HEADLAMP - W/PARK&TURN - RIGHT HAND
6	154799-01-000	EA	HOUSING - 4-POSITION/FEMALE - 150-SERIES - HEADLAMP - FORD
6	154799-02-000	EA	LOCK - SECONDARY - 4 POSITION - HEADLAMP - FORD
6	067789-02-000	EA	SOCKET - LAMP - PARK LAMP - FORD
6	146560-02-000	EA	SOCKET - LAMP - 3 WIRE - TURN/PARK LAMP
7	154881-02-000	EA	HEADLAMP - W/PARK&TURN - LEFT HAND
7	154799-01-000	EA	HOUSING - 4-POSITION/FEMALE - 150-SERIES - HEADLAMP - FORD
7	154799-02-000	EA	LOCK - SECONDARY - 4 POSITION - HEADLAMP - FORD
7	067789-02-000	EA	SOCKET - LAMP - PARK LAMP - FORD
7	146560-02-000	EA	SOCKET - LAMP - 3 WIRE - TURN/PARK LAMP
8	153318-01-000	EA	LAMP - FOG - CLEAR/SQUARE - PASSENGER
8	124187-01-000	EA	SOCKET/HOUSING
9	153318-02-000	EA	LAMP - FOG - CLEAR/SQUARE - DRIVER
9	124187-01-000	EA	SOCKET/HOUSING

COPYRIGHT © 2006 WINNEBAGO INDUSTRIES INC.

ELECTRICAL GROUP (CONTINUED)

FRONT END

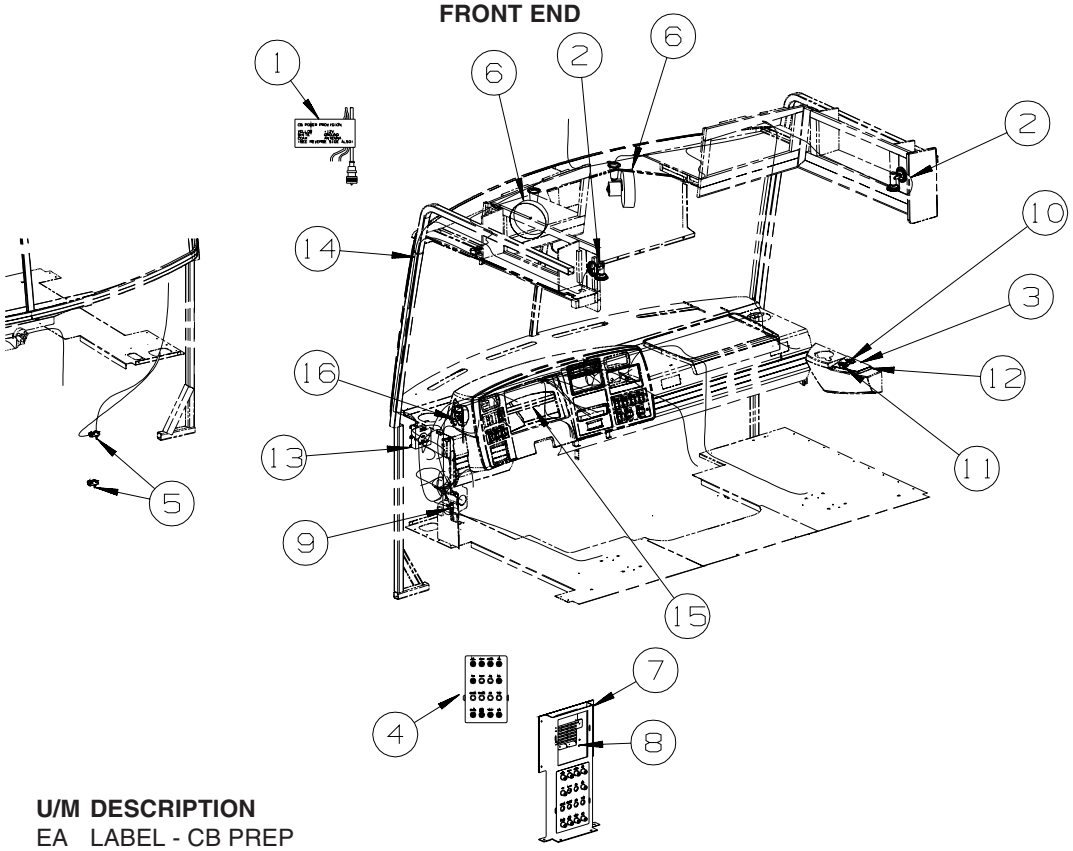

KEY	PART NUMBER	U/M	DESCRIPTION
1	104678-01-000	EA	LABEL - CB PREP
2	128786-02-02A	EA	LIGHT - READING/SWIVEL - W/O SWITCH - SATIN NICKEL
2	123917-01-000	EA	BULB - 12V - HALOGEN SPOT
3	148653-05-01A	EA	APPLIQUE - PASSENGER - DARK RIVERSTONE
4	093236-41-000	EA	LABEL - CIRCUIT BREAKER
5	147428-01-02B	EA	BRACKET/ZEE - F/TEMPERATURE SENSOR - E-COATED
6	122856-01-01A	EA	FAN-DEFROSTER-2 SPEED W/SWIVEL BASE/NON-OSCILLATING-CHROME
7	149689-01-02B	EA	BRACKET - CIRCUIT BREAKER, E-COAT
8	149690-01-02B	EA	BRACKET - FUSE PANEL, WH, E-COAT
8	149690-02-02B	EA	BRACKET - FUSE PANEL, FORD, E-COAT - FORD
9	041250-01-000	EA	SWITCH - PUSH BUTTON/DOOR JAMB - METAL/CHROME
10	145638-01-01A	EA	SWITCH/ROCKER - SPST (ON/OFF) - BLACK
11	145638-12-01A	EA	SWITCH/ROCKER - DPDT (ON/ON/ON) - BLACK
11	145754-01-01A	EA	SWITCH - BLANK - BLACK
11	108355-02-000	EA	HOUSING - SWITCH - 12 POSITION
12	145926-08-02B	EA	INSERT ASM - SWITCH, RH - E-COAT
13	135420-20-000	EA	RECEIVER-SAT RADIO - SIRIUS
14	152780-02-000	EA	CABLE/ANTENNA - SATELLITE RADIO SIRRUS
15	113452-01-000	FT	SEAL/TRIM - FRONT - VINYL W/WIRE CARRIER - .020"
16	151935-01-000	EA	RADIO/CB - 40 CHANNEL - COBRA C75WXST

COPYRIGHT © 2006 WINNEBAGO INDUSTRIES INC.

ELECTRICAL GROUP (CONTINUED)

FRONT END (CONTINUED)

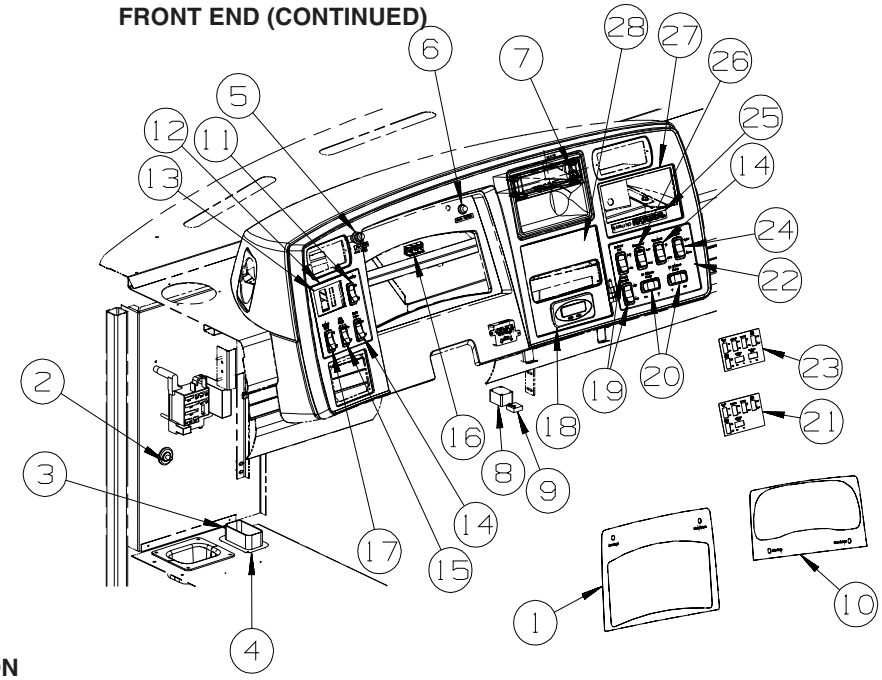

KEY	PART NUMBER	U/M	DESCRIPTION
1	148653-06-01A	EA	APPLIQUE - BEZEL - INSTRUMENT CLUSTER - DARK RIVERSTONE - WORKHORSE
2	118499-01-000	EA	STUD-FEED THRU
3	118571-03-000	EA	BRACKET - MOUNTING
4	118571-04-000	EA	GASKET
5	150237-01-000	EA	LIGHT - INDICATOR - RED
6	150237-02-000	EA	LIGHT - INDICATOR - AMBER
7	111414-01-000	EA	RECEPTACLE/SOCKET - 12 VOLT
8	128074-02-000	EA	FILTER - NOISE - 12 VOLT DC W/PLUGS
9	133535-01-000	EA	MODULE - TIMER 20 SECOND - WARNING LIGHT - TS61120P
10	148653-10-01A	EA	APPLIQUE - BEZEL - INSTRUMENT CLUSTER - FORD-DK RIVERSTONE - FORD
11	145638-07-01A	EA	SWITCH/ROCKER - DPDT (ON/ON) - BLACK - 2005 WORKHORSE
11	145638-14-01A	EA	SWITCH/ROCKER - DPDT (ON/OFF/ON) - BLACK - 2006 WORKHORSE
11	108355-02-000	EA	HOUSING - SWITCH - 12 POSITION
11	103603-01-000	EA	BULB - 12V - #74 - .12A WEDGE - GE 22-25 USED IN DASH
12	148653-09-01A	EA	APPLIQUE - BEZEL - LEFT HAND - DARK RIVERSTONE - 2005 WORKHORSE
12	148653-14-01A	EA	APPLIQUE - BEZEL - LEFT HAND - DARK RIVERSTONE - 2006 WORKHORSE
12	148653-04-01A	EA	APPLIQUE - BEZEL - LEFT HAND - DARK RIVERSTONE - FORD
13	134088-02-01A	EA	APPLIQUE - SWITCH - HEADLAMP - BLACK - WORKHORSE
14	145638-01-01A	EA	SWITCH/ROCKER - SPST (ON/OFF) - BLACK
14	108355-02-000	EA	HOUSING - SWITCH - 12 POSITION
14	103603-01-000	EA	BULB - 12V - #74 - .12A WEDGE - GE 22-25 USED IN DASH
15	145638-02-01A	EA	SWITCH/ROCKER - SPST (ON/OFF) - LIGHTED - BLACK
15	108355-02-000	EA	HOUSING - SWITCH - 12 POSITION
15	103603-01-000	EA	BULB - 12V - #74 - .12A WEDGE - GE 22-25 USED IN DASH
16	063912-02-000	EA	RELAY CANISTER, SPDT
17	145638-04-01A	EA	SWITCH/ROCKER - SPDT (ON/ON) - BLACK
17	108355-02-000	EA	HOUSING - SWITCH - 12 POSITION
17	103603-01-000	EA	BULB - 12V - #74 - .12A WEDGE - GE 22-25 USED IN DASH
18*	136119-01-000	EA	COMPASS/THERMOMETER - ELECTRONIC- 4.5" X 2.3" DISPLAY FACE
19	145638-03-01A	EA	SWITCH/ROCKER - SPDT (ON/OFF/ON) - BLACK
19	108355-02-000	EA	HOUSING - SWITCH - 12 POSITION
19	103603-01-000	EA	BULB - 12V - #74 - .12A WEDGE - GE 22-25 USED IN DASH
20	145638-09-01A	EA	SWITCH/ROCKER - DPDT (ON/OFF/ON) - BLACK
20	108355-02-000	EA	HOUSING - SWITCH - 12 POSITION
20	103603-01-000	EA	BULB - 12V - #74 - .12A WEDGE - GE 22-25 USED IN DASH
21	148653-03-01A	EA	APPLIQUE - BEZEL - RIGHT HAND - DARK RIVERSTONE
22	148653-01-01A	EA	APPLIQUE - BEZEL - RIGHT HAND - DARK RIVERSTONE - FRONT RIGHT SLIDEOUT
23	148653-13-01A	EA	APPLIQUE - BEZEL - RIGHT HAND - DARK RIVERSTONE - G38T
24	145638-07-01A	EA	SWITCH/ROCKER - DPDT (ON/ON) - BLACK
24	108355-02-000	EA	HOUSING - SWITCH - 12 POSITION
24	103603-01-000	EA	BULB - 12V - #74 - .12A WEDGE - GE 22-25 USED IN DASH
25	116549-01-000	EA	LABEL - WARNING - SLIDEOUT - .75” x 6.5”

COPYRIGHT © 2006 WINNEBAGO INDUSTRIES INC.

ELECTRICAL GROUP (CONTINUED)

FRONT END (CONTINUED)

KEY	PART NUMBER	U/M	DESCRIPTION
26	145638-06-01A	EA	SWITCH/ROCKER - SPDT (ON/OFF/ON) - LIGHTED - BLACK
26	108355-02-000	EA	HOUSING - SWITCH - 12 POSITION
26	103603-01-000	EA	BULB - 12V - #74 - .12A WEDGE - GE 22-25 USED IN DASH
27	148653-12-01A	EA	APPLIQUE - BEZEL - RADIO - DARK RIVERSTONE
28	148653-11-01A	EA	APPLIQUE - BEZEL - RIGHT HAND - DARK RIVERSTONE

***COMPONENT PARTS LISTED LATER IN THIS GROUP**

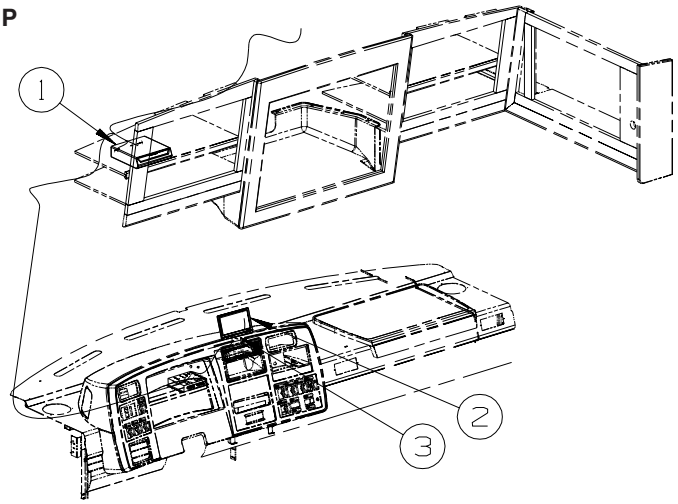

GPS

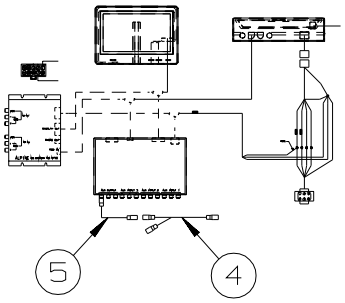

KEY	PART NUMBER	U/M	DESCRIPTION
1*	137424-01-000	EA	GPS-NAVAGATION SYS-W/DVD DIVIT/MAPS/GPS ANT & WIRE HARNESS FROM: 00-00-00 THRU: 04-02-06
1	137424-08-000	EA	*GPS-NAVAGATION SYS-W/DVD DIVIT/MAPS/GPS ANT/WIRE HARNESS FROM: 04-03-06 THRU: 99-99-99
2	137424-06-000	EA	MONITOR/LCD - COLOR - 6.5"
3	137424-04-000	EA	BRACKET - MONITOR
4	NOT USED		
5	NOT USED		

***COMPONENT PARTS LISTED LATER IN THIS GROUP**

COPYRIGHT © 2006 WINNEBAGO INDUSTRIES INC.

ELECTRICAL GROUP (CONTINUED)

FRONT TV/VCR

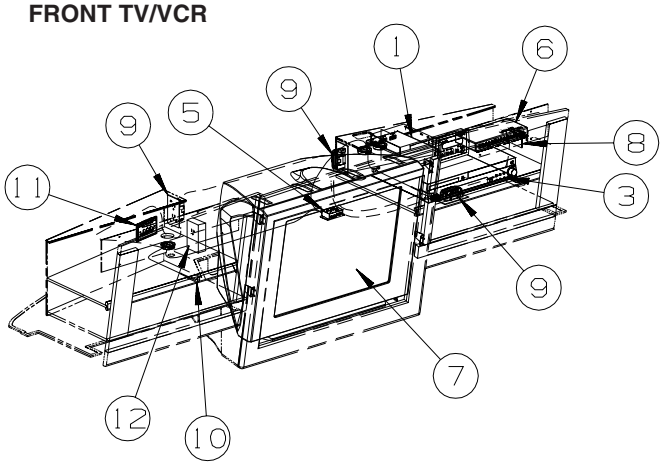

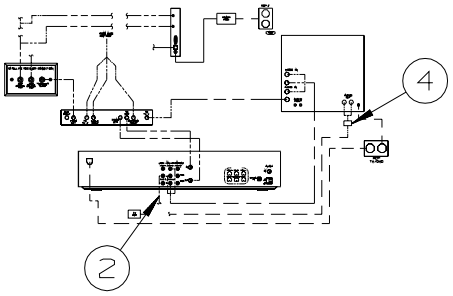

KEY	PART NUMBER	U/M	DESCRIPTION
1	140062-01-000	EA	SWITCH - SPEAKER - 6 CHANNEL
2	117420-02-000	EA	CABLE - W/MALE RCA ENDS - SHIELDED - 4'
			FROM: 00-00-00 THRU: 06-06-05
2	117420-03-000	EA	CABLE - W/MALE RCA ENDS - SHIELDED - 20'
			FROM: 06-07-05 THRU: 99-99-99
3*	154548-01-000	EA	DVD/VCR - HOME THEATER COMBO - SONY HTV700DP
			FROM: 00-00-00 THRU: 02-12-06
3	158931-01-000	EA	DVD/VCR - HOME THEATER COMBO-W/O SPEAKERS-TOSHIBA SD-V57HT
			FROM: 02-13-06 THRU: 99-99-99
4	123324-01-000	EA	FILTER - GROUND LOOP
5	149750-04-000	EA	MODULE/INTERFACE - INFRA RED (RECEIVER TO TRANSMITTER)
6	142258-01-000	EA	SWITCH - VIDEO/ANTENNA POWER SUPPLY
7*	146298-02-000	EA	TV - 27" STEREO W/5 JACKS - SONY 27FS120
8	058707-02-000	EA	RECEPTACLE - BLANK - JUNCTION BOX
9	058708-01-000	EA	RECEPTACLE - ELECTRIC - DOUBLE - BROWN
9	158542-02-01A	EA	LABEL - RECEPTACLE - ELECTRONICS - WHITE/BLACK
10	149750-03-000	EA	TRANSMITTER - F/INFRA RED RECEIVER
11	149557-04-01A	EA	PLATE/WALL - TRIPLE COAXIAL/HORIZONTAL - WHITE
12	156676-01-000	EA	CONTROLLER/OUTLET - POWER/TV - AUTO SHUTOFF W/IGNITION
			FROM: 08-22-05 THRU: 99-99-99

***COMPONENT PARTS LISTED LATER IN THIS GROUP**

COPYRIGHT © 2006 WINNEBAGO INDUSTRIES INC.

ELECTRICAL GROUP (CONTINUED)

SIDE TV/VCR

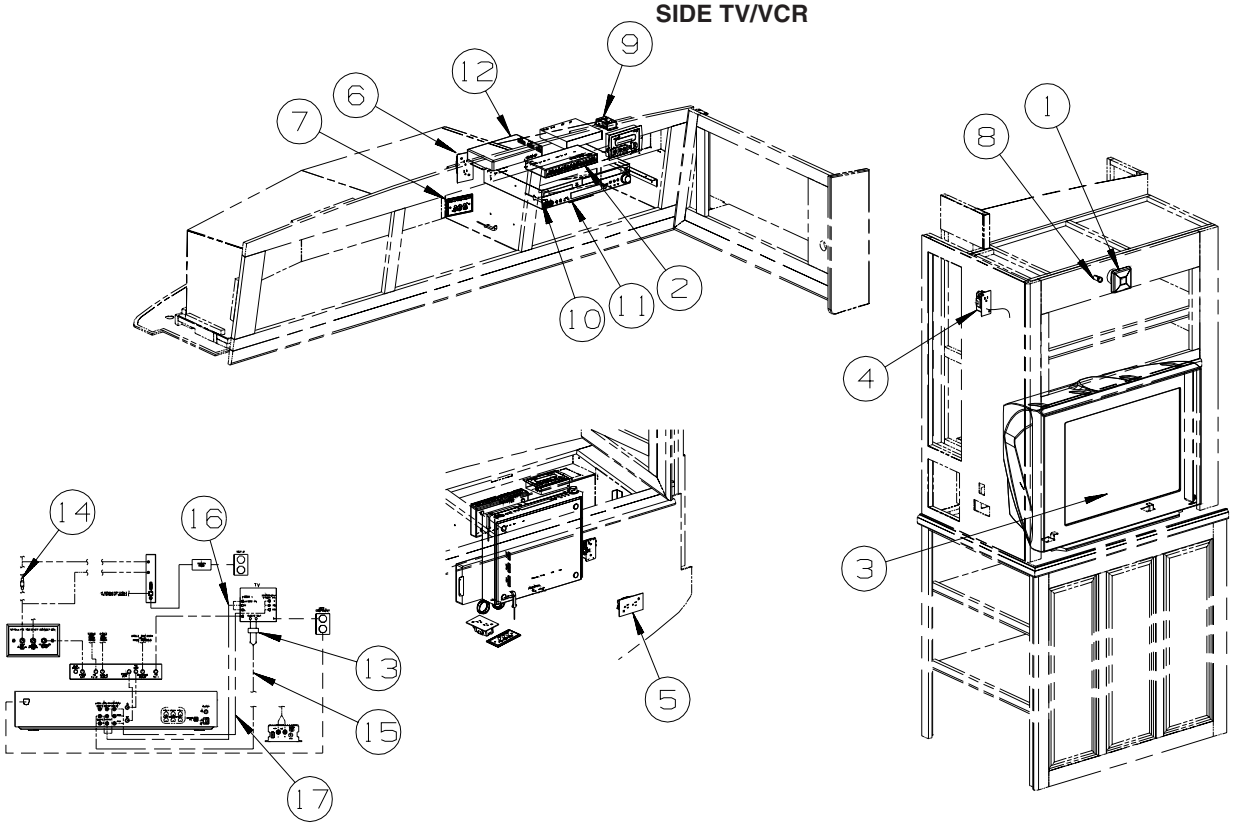

G37B

KEY	PART NUMBER	U/M	DESCRIPTION
1	148026-02-01A	EA	SPEAKER GRILLE - CUBE - SILVER
1	148026-03-01A	EA	SPEAKER - CUBE - W/O CASE
2	142258-01-000	EA	SWITCH - VIDEO/ANTENNA POWER SUPPLY
3*	146298-02-000	EA	TV - 27" STEREO W/5 JACKS - SONY 27FS120
4	058707-01-000	EA	RECEPTACLE - ELECTRIC - SINGLE - BROWN
5	058708-01-000	EA	RECEPTACLE - ELECTRIC - DOUBLE - BROWN
6	058708-05-000	EA	RECEPTACLE - ELECTRIC - SINGLE - BROWN
7	149557-04-01A	EA	PLATE/WALL - TRIPLE COAXIAL/HORIZONTAL - WHITE
8	149750-01-000	EA	RECEIVER - (INFRA RED SIGNAL) - W/6"LEAD/PLUG
9	149750-04-000	EA	MODULE/INTERFACE - INFRA RED (RECEIVER TO TRANSMITTER)
10	149750-03-000	EA	TRANSMITTER - F/INFRA RED RECEIVER
11*	154548-01-000	EA	DVD/VCR - HOME THEATER COMBO - SONY HTV700DP FROM: 00-00-00 THRU: 02-12-06
11	158931-01-000	EA	DVD/VCR - HOME THEATER COMBO-W/O SPEAKERS-TOSHIBA SD-V57HT FROM: 02-13-06 THRU: 99-99-99
12	140062-01-000	EA	SWITCH - SPEAKER - 6 CHANNEL
13	123324-01-000	EA	FILTER - GROUND LOOP
14	082134-01-000	EA	ADAPTER - TV - CABLE TO CABLE
15	NOT USED		
16	NOT USED		
17	NOT USED		

***COMPONENT PARTS LISTED LATER IN THIS GROUP**

COPYRIGHT © 2006 WINNEBAGO INDUSTRIES INC.

ELECTRICAL GROUP (CONTINUED)

SIDE TV/VCR (CONTINUED)

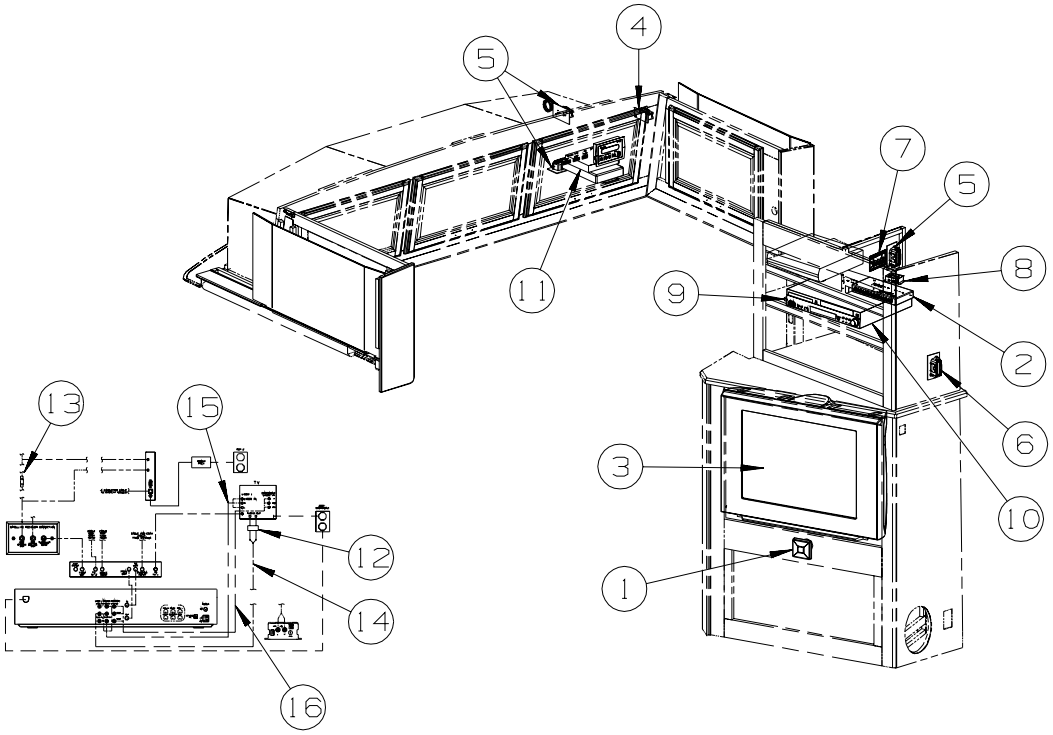

G38J

KEY	PART NUMBER	U/M	DESCRIPTION
1	148026-02-01A	EA	SPEAKER GRILLE - CUBE - SILVER
1	148026-03-01A	EA	SPEAKER - CUBE - W/O CASE
2	142258-01-000	EA	SWITCH - VIDEO/ANTENNA POWER SUPPLY
3*	146298-02-000	EA	TV - 27" STEREO W/5 JACKS - SONY 27FS120
4	058707-02-000	EA	RECEPTACLE - BLANK - JUNCTION BOX
5	058708-01-000	EA	RECEPTACLE - ELECTRIC - DOUBLE - BROWN
5	158542-02-01A	EA	LABEL - RECEPTACLE - ELECTRONICS - WHITE/BLACK - LOCATED IN FRONT OVERHEAD CABINET
6	058708-05-000	EA	RECEPTACLE - ELECTRIC - SINGLE - BROWN
7	149557-04-01A	EA	PLATE/WALL - TRIPLE COAXIAL/HORIZONTAL - WHITE
8	149750-04-000	EA	MODULE/INTERFACE - INFRA RED (RECEIVER TO TRANSMITTER)
9	149750-03-000	EA	TRANSMITTER - F/INFRA RED RECEIVER
10*	154548-01-000	EA	DVD/VCR - HOME THEATER COMBO - SONY HTV700DP FROM: 00-00-00 THRU: 02-12-06
10	158931-01-000	EA	DVD/VCR - HOME THEATER COMBO-W/O SPEAKERS-TOSHIBA SD-V57HT FROM: 02-13-06 THRU: 99-99-99
11	140062-01-000	EA	SWITCH - SPEAKER - 6 CHANNEL
12	123324-01-000	EA	FILTER - GROUND LOOP
13	082134-01-000	EA	ADAPTER - TV - CABLE TO CABLE
14	117420-03-000	EA	CABLE - W/MALE RCA ENDS - SHIELDED - 20'
15	136860-01-000	EA	CABLE - RCA - #3 MALE TO #12F MALE CONNECTOR
16	155845-01-000	EA	CABLE - RCA - 12' - 3 RCA MALE CONNECTORS - BOTH ENDS

***COMPONENT PARTS LISTED LATER IN THIS GROUP**

COPYRIGHT © 2006 WINNEBAGO INDUSTRIES INC.

ELECTRICAL GROUP (CONTINUED)

SIDE TV/VCR (CONTINUED)

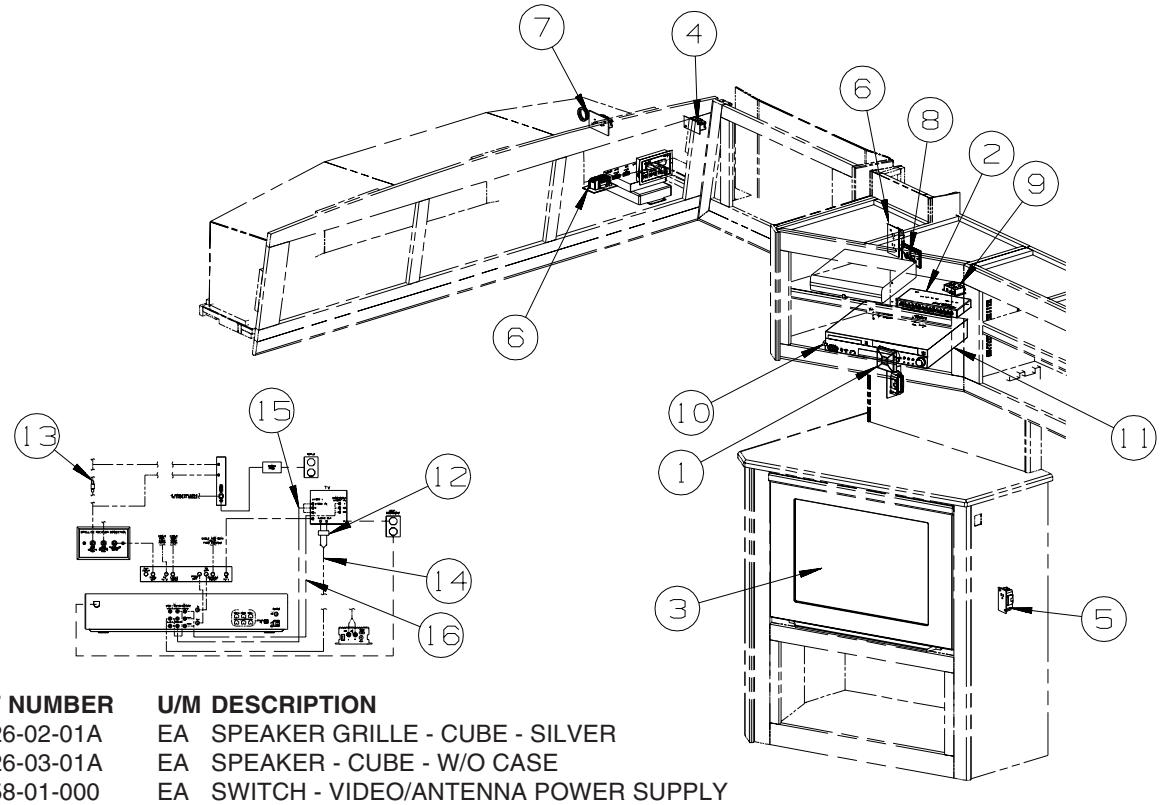

G38R

KEY	PART NUMBER	U/M	DESCRIPTION
1	148026-02-01A	EA	SPEAKER GRILLE - CUBE - SILVER
1	148026-03-01A	EA	SPEAKER - CUBE - W/O CASE
2	142258-01-000	EA	SWITCH - VIDEO/ANTENNA POWER SUPPLY
3*	146298-02-000	EA	TV - 27" STEREO W/5 JACKS - SONY 27FS120
4	058707-02-000	EA	RECEPTACLE - BLANK - JUNCTION BOX
5	058707-01-000	EA	RECEPTACLE - ELECTRIC - SINGLE - BROWN
6	058708-01-000	EA	RECEPTACLE - ELECTRIC - DOUBLE - BROWN
7	058708-05-000	EA	RECEPTACLE - ELECTRIC - SINGLE - BROWN
5	158542-02-01A	EA	LABEL - RECEPTACLE - ELECTRONICS - WHITE/BLACK
8	149557-04-01A	EA	PLATE/WALL - TRIPLE COAXIAL/HORIZONTAL - WHITE
9	149750-04-000	EA	MODULE/INTERFACE - INFRA RED (RECEIVER TO TRANSMITTER)
10	149750-03-000	EA	TRANSMITTER - F/INFRA RED RECEIVER
11*	154548-01-000	EA	DVD/VCR - HOME THEATER COMBO - SONY HTV700DP FROM: 00-00-00 THRU: 02-12-06
11	158931-01-000	EA	DVD/VCR - HOME THEATER COMBO-W/O SPEAKERS-TOSHIBA SD-V57HT FROM: 02-13-06 THRU: 99-99-99
12	123324-01-000	EA	FILTER - GROUND LOOP
13	082134-01-000	EA	ADAPTER - TV - CABLE TO CABLE
14	117420-03-000	EA	CABLE - W/MALE RCA ENDS - SHIELDED - 20'
15	136860-01-000	EA	CABLE - RCA - #3 MALE TO #12F MALE CONNECTOR
16	155845-01-000	EA	CABLE - RCA - 12' - 3 RCA MALE CONNECTORS - BOTH ENDS

***COMPONENT PARTS LISTED LATER IN THIS GROUP**

COPYRIGHT © 2006 WINNEBAGO INDUSTRIES INC.

ELECTRICAL GROUP (CONTINUED)

SIDE TV/VCR (CONTINUED)

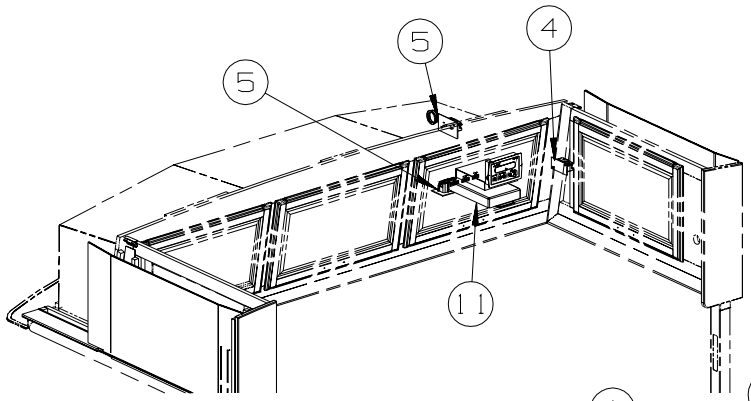

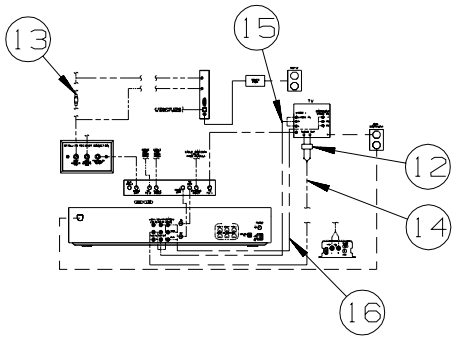

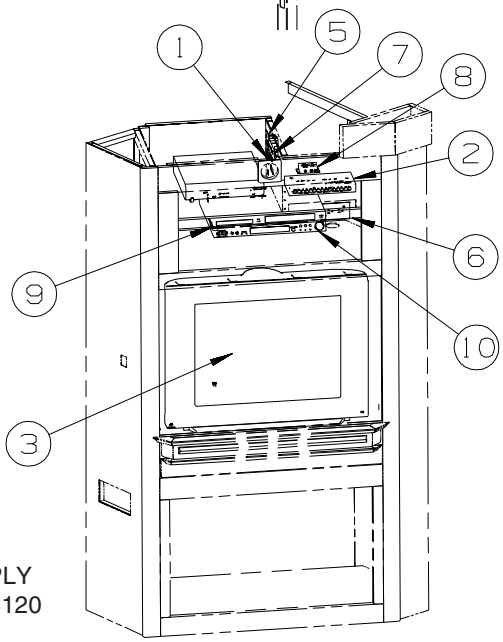

G38T

KEY	PART NUMBER	U/M	DESCRIPTION
1	148026-02-01A	EA	SPEAKER GRILLE - CUBE - SILVER
1	148026-03-01A	EA	SPEAKER - CUBE - W/O CASE
2	142258-01-000	EA	SWITCH - VIDEO/ANTENNA POWER SUPPLY
3*	146298-02-000	EA	TV - 27" STEREO W/5 JACKS - SONY 27FS120
4	058707-02-000	EA	RECEPTACLE - BLANK - JUNCTION BOX
5	058708-01-000	EA	RECEPTACLE - ELECTRIC - DOUBLE - BROWN
5	158542-02-01A	EA	LABEL - RECEPTACLE - ELECTRONICS - WHITE/BLACK - LOCATED IN FRONT OVERHEAD CABINET
6	058708-05-000	EA	RECEPTACLE - ELECTRIC - SINGLE - BROWN
7	149557-04-01A	EA	PLATE/WALL - TRIPLE COAXIAL/HORIZONTAL - WHITE
8	149750-04-000	EA	MODULE/INTERFACE - INFRA RED (RECEIVER TO TRANSMITTER)
9	149750-03-000	EA	TRANSMITTER - F/INFRA RED RECEIVER
10*	154548-01-000	EA	DVD/VCR - HOME THEATER COMBO - SONY HTV700DP FROM: 00-00-00 THRU: 02-12-06
10	158931-01-000	EA	DVD/VCR - HOME THEATER COMBO-W/O SPEAKERS-TOSHIBA SD-V57HT FROM: 02-13-06 THRU: 99-99-99
11	140062-01-000	EA	SWITCH - SPEAKER - 6 CHANNEL
12	123324-01-000	EA	FILTER - GROUND LOOP
13	082134-01-000	EA	ADAPTER - TV - CABLE TO CABLE
14	117420-03-000	EA	CABLE - W/MALE RCA ENDS - SHIELDED - 20'
15	136860-01-000	EA	CABLE - RCA - #3 MALE TO #12F MALE CONNECTOR
16	155845-01-000	EA	CABLE - RCA - 12' - 3 RCA MALE CONNECTORS - BOTH ENDS

***COMPONENT PARTS LISTED LATER IN THIS GROUP**

COPYRIGHT © 2006 WINNEBAGO INDUSTRIES INC.

ELECTRICAL GROUP (CONTINUED)

COMPONENT PARTS FOR WIRING

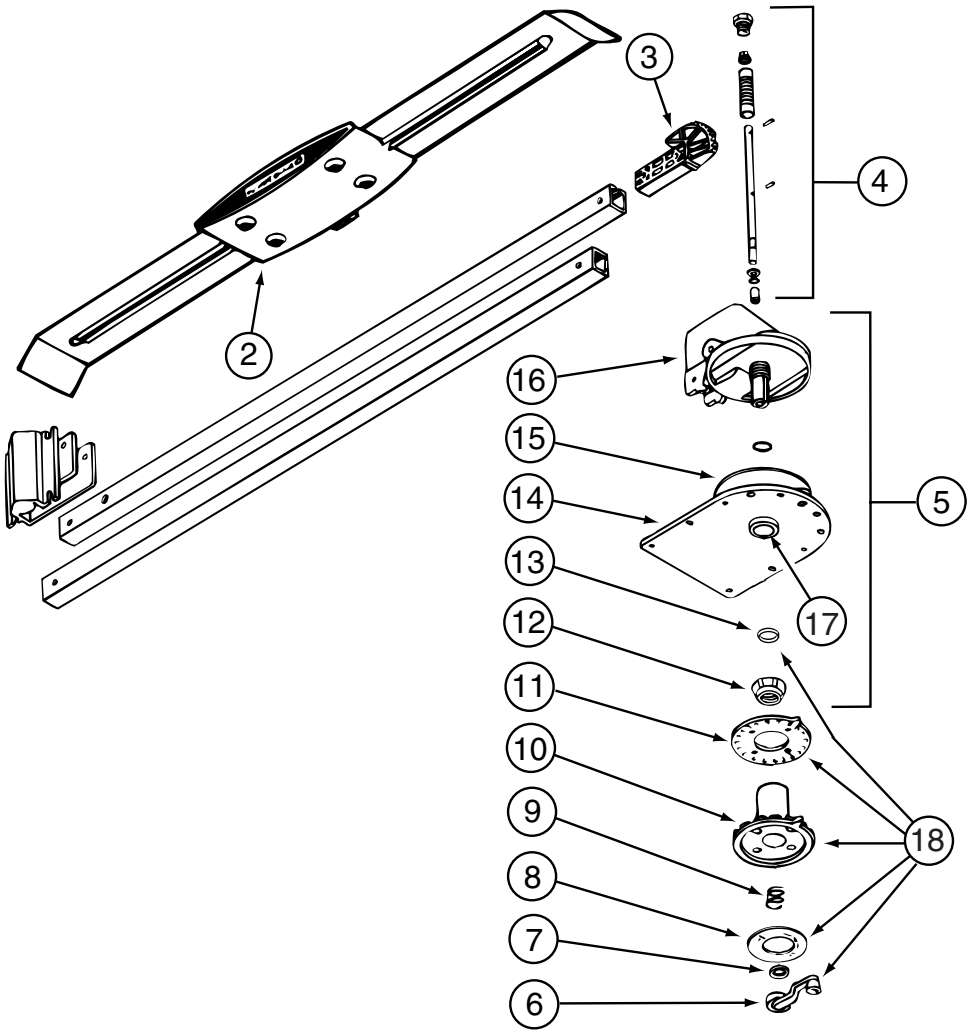

076319-23-000

KEY	PART NUMBER	U/M	DESCRIPTION	VENDOR NO.
2	076319-01-700	EA	HEAD-ANTENNA, AMPLIFIED	RVSA U/V
3	076319-01-701	EA	GEAR-ELEVATING, PLASTIC	2200046
4	076319-01-702	EA	SHAFT ASM-ELEVATING	RP-4000
5	076319-01-711	EA	BASE & LIFT ASM	2762802
7	076319-01-705	EA	GROMMET-NYLON, 7/8"ID	3200658
8	076319-01-708	EA	DECAL-CRANK	5413002
9	076319-01-707	EA	SPRING-HANDLE	2160822
11	076319-01-712	EA	PLATE - CEILING	3200608
12	076319-01-715	EA	NUT (GEAR HOUSING)	2200047
14	076319-01-713	EA	PLATE-BASE, STEEL	3100523
15	076319-01-703	EA	BEARING-NYLON, 5"OD	3200656
16	076319-01-714	EA	HOUSING, ROTATING GEAR	2200049
17	076319-01-704	EA	BEARING-NYLON, 1.25"OD	3200657
18	076319-01-709	EA	HANDLE-HEAD DIRECTIONAL	200644
	076319-01-716	EA	TUBING, ELEVATING	RP-2900
			CONTACT WINNEBAGO PART SALES FOR UNLISTED COMPONENT(S)	

076319-25-000

KEY	PART NUMBER	U/M	DESCRIPTION	VENDOR NO.
6	076319-01-706	EA	CRANK-W/SET SCREW UNIV/BEIGE	2750897
6	120233-01-710	EA	HANDLE-CRANK W/SCREW - WHITE	RP-6795
8	076319-01-708	EA	DECAL-CRANK	5413002
10	076319-25-700	EA	DIRECTIONAL HANDLE(WHITE)	3200612
11	076319-25-701	EA	PLATE - CEILING(WHITE)	3200609
13	120233-01-709	EA	WASHER-NYLON	RP-2658
			CONTACT WINNEBAGO PART SALES FOR UNLISTED COMPONENT(S)	

COPYRIGHT © 2006 WINNEBAGO INDUSTRIES INC.

ELECTRICAL GROUP (CONTINUED)

COMPONENT PARTS FOR WIRING (CONTINUED)

086280-01-000

KEY	PART NUMBER	U/M	DESCRIPTION	VENDOR NO.
	086280-01-700	EA	BULB,12V	ARP1089

087694-01-000

KEY	PART NUMBER	U/M	DESCRIPTION	VENDOR NO.
	087694-01-700	EA	BULB	GE561

093575-23-03A

KEY	PART NUMBER	U/M	DESCRIPTION	VENDOR NO.
	093575-23-700	EA	GLOBE - SQUARE	

093575-33-03A

KEY	PART NUMBER	U/M	DESCRIPTION	VENDOR NO.
	093575-33-701	EA	GLASS(WHITE SWIRL)W/IND HOLE	9111
	093575-33-702	EA	FINIAL (MOON BALL)SATIN NICKL	12-139-TY

097917-01-06A

KEY	PART NUMBER	U/M	DESCRIPTION	VENDOR NO.
	097917-01-700	EA	LENS-LIGHT, CLEAR	30-78-021

108354-01-01A

KEY	PART NUMBER	U/M	DESCRIPTION	VENDOR NO.
	108354-01-700	EA	BULB-COURTESY LIGHT	395-B

121935-01-01A

KEY	PART NUMBER	U/M	DESCRIPTION	VENDOR NO.
	121935-01-700	EA	LENS ONLY	809511

123775-01-02A

KEY	PART NUMBER	U/M	DESCRIPTION	VENDOR NO
	123775-01-702	EA	BEZEL/LENS - SATIN NICKEL	99 953470

COPYRIGHT © 2006 WINNEBAGO INDUSTRIES INC.

ELECTRICAL GROUP (CONTINUED)

COMPONENT PARTS FOR WIRING (CONTINUED)

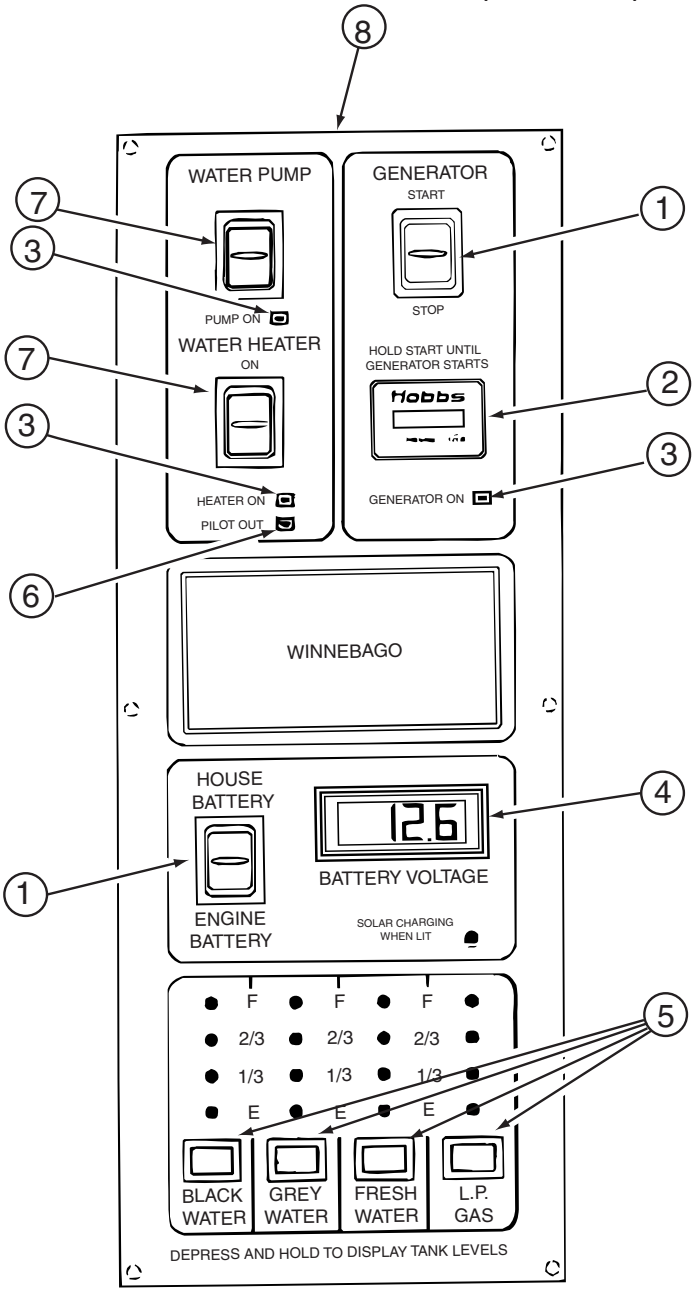

133004-05-01A

KEY	PART NUMBER	U/M	DESCRIPTION	VENDOR NO.
1	133004-01-702	EA	SWITCH/DPDT MOM=ON-OFF-ON	L1011-00
2	100258-10-701	EA	GAUGE-HR METER ONLY (LCD)	L0775-00
3	133004-01-706	EA	L.E.D. GREEN-PANEL MOUNT	L0785
4	133004-01-704	EA	METER/VOLT-DIGITAL - LCD	L1008-00
5	133004-01-705	EA	SWITCH/MOM ON - PUSH BUTTON	L0950-00
6	130004-01-703	EA	L.E.D. RED-PANEL MOUNT	L1009-00
7	133004-01-701	EA	SWITCH/DPDT ON-ON/MAINTAINED	L1025-00
8	133004-05-700	EA	SCREENED CHASSIS	CC0563-00
	133004-05-701	EA	BOARD - PC	L5130-02

133068-01-000

KEY	PART NUMBER	U/M	DESCRIPTION	VENDOR NO
	133068-01-700	EA	BULB/HAIRDRYER	46048-004

COPYRIGHT © 2006 WINNEBAGO INDUSTRIES INC.

ELECTRICAL GROUP (CONTINUED)

COMPONENT PARTS FOR WIRING (CONTINUED)

136119-01-000

KEY	PART NUMBER	U/M	DESCRIPTION	VENDOR NO.
	136119-01-700	EA	COMPASS SENSOR (BLACK BOX)	AP-SUB-005
	136119-01-701	EA	PROBE/TEMPERATURE SENSOR(V1)	AP-SUB-004A
	136119-01-702	EA	DISPLAY MODULE-LED (V1)	AP-SUB-004B
	136119-01-703	EA	HARNESS - COMPASS POWER	AP-HRN-175
	136119-01-704	EA	HARNESS - COMPASS ENGINE	AP-HRN-176
	136119-01-705	EA	HRNSS-COMP.TEMP SENSOR V1	AP-HRN-177
	136119-01-706	EA	PROBE/TEMPERATURE SENSOR (V2)	AP-SUB-006
	136119-01-707	EA	DISPLAY MODULE - VISUAL (V2)	AP-SUB-007
	136119-01-708	EA	HARNESS/COMP. COMP/THERM(V2)	AP-HRN-239 W/PACKRD

COPYRIGHT © 2006 WINNEBAGO INDUSTRIES INC.

ELECTRICAL GROUP (CONTINUED)

COMPONENT PARTS FOR WIRING (CONTINUED)

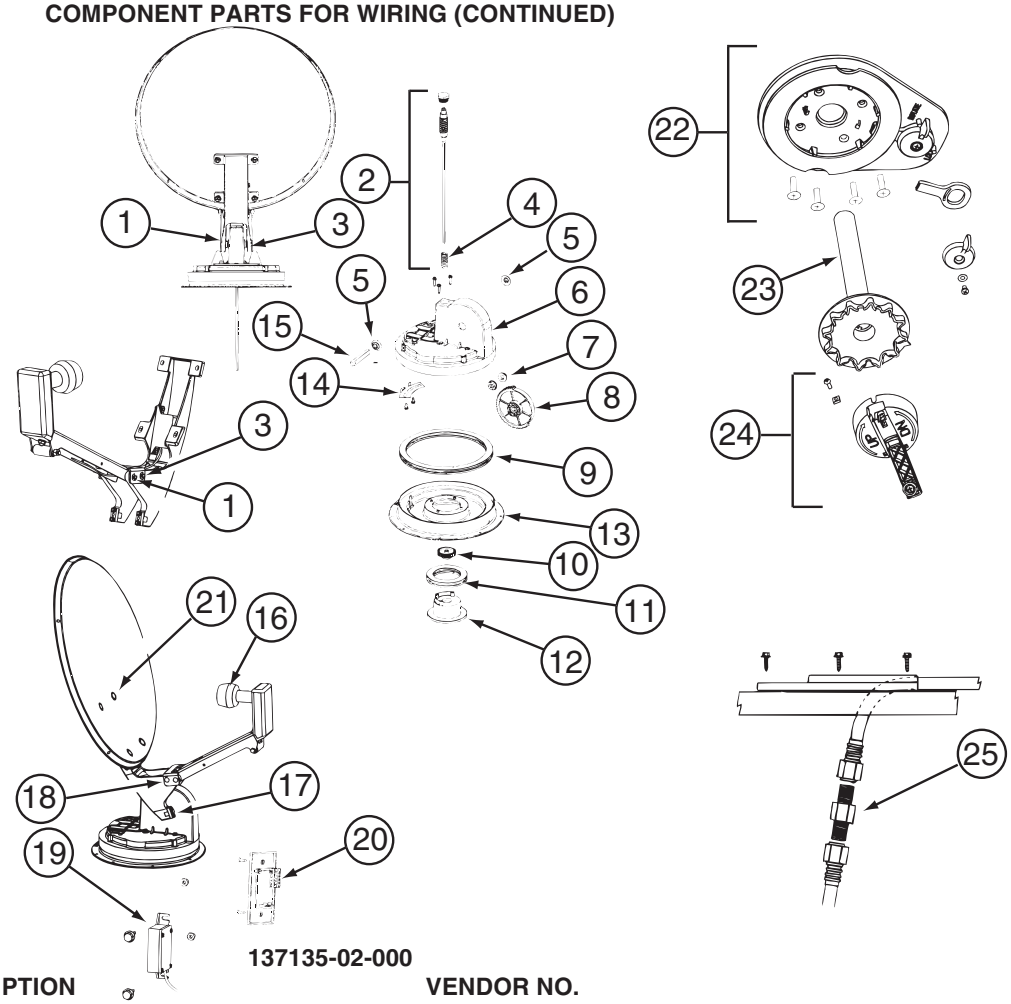

137135-02-000

KEY	PART NUMBER	U/M	DESCRIPTION	VENDOR NO.
1	120233-01-714	EA	CLIP-E	5160818
2	137135-01-703	EA	KIT ELEV - SHAFT/GEAR/SPRING	RP-4400
3	137135-01-704	EA	PIN - 1/4" X 3.25"	2160813
4	137135-01-705	EA	SPRING	2160818
5	137135-01-707	EA	SEAL - PIVOT SHAFT	2200852
6	137135-01-708	EA	TURRET	3100728
7	137135-01-709	EA	PIVOT BEARING	2200470
8	137135-01-711	EA	GEAR - ELEVATING	2200464
9	137135-01-712	EA	BEARING - OUTER	2590347
10	137135-01-714	EA	GEAR - ELEVATING SHAFT	2200465
11	137135-01-715	EA	BEARING - INNER	2590348
12	137135-01-716	EA	HUB	3100731
13	137135-01-713	EA	TURRET BASE	3100730
14	137135-01-710	EA	PLATE - ROTATE LIMIT	3720052
16	137135-02-703	EA	LOW NOISE BLOCK FILTER	LB-6000 - DUAL
17	137135-01-722	EA	CLAMP	2590343
18	137135-01-719	EA	BRACKET - PIVOT	2744945
19	137135-01-720	EA	DE-SENSOR UNIT W/43" CABLE	DM4000
20	137135-02-701	EA	BOX - SURFACE MOUNT	SM-100
21	137135-01-717	EA	BOLT - FLAT HEAD	2160362
22	120233-01-737	EA	PLATE/INT-W/DIRECTIONAL HDLE	RK-CEIL
23	120233-01-704	EA	DIAL/DIRECTIONAL 4"W/SPRING	3200364
24	120233-01-738	EA	HDW PKG-HANDLE/SPRING/WASHER	RK-HAND
25	137135-01-701	EA	CONNECTOR - F - MALE TO MALE	FS-8100
	120233-04-700	EA	KIT-WALL PLATE/CABLE - GRAY	DM4000
	137135-01-700	EA	ROOF WEDGE W/GASKET	RW-5000
	137135-01-706	EA	KIT-TURRET/SEAL/BEARING/GEAR	RP-RM30
	137135-01-718	EA	REFLECTOR/WHITE-46CM W/HDW	RP-35RM
	137135-02-700	EA	DE-SENSOR	2780096
	137135-02-704	EA	KIT-UPDATE DIRECTIONAL HDL	RP-RMDH
	137135-02-705	EA	KIT-TURRET & SHAFT COMPLETE	RP-RM46

CONTACT WINNEBAGO PART SALES FOR UNLISTED COMPONENT(S)

COPYRIGHT © 2006 WINNEBAGO INDUSTRIES INC.

ELECTRICAL GROUP (CONTINUED)

COMPONENT PARTS FOR WIRING (CONTINUED)

137417-01-01A, 137417-03-01A

KEY	PART NUMBER	U/M	DESCRIPTION	VENDOR NO.
	137417-01-700	EA	LENS - SINGLE (FROSTED)	810868

137417-06-01A

KEY	PART NUMBER	U/M	DESCRIPTION	VENDOR NO.
	137417-06-700	EA	LENS - DOUBLE WHITE	810867

137424-01-000

KEY	PART NUMBER	U/M	DESCRIPTION	VENDOR NO.
	137424-01-700	EA	DISC - SETUP - DVD	NVD-A131
	137424-01-701	EA	REMOTE	RUE-4190
	137424-01-702	EA	CABLE/GPS-13 PIN RGB/6M EXTN	01T15696Y02

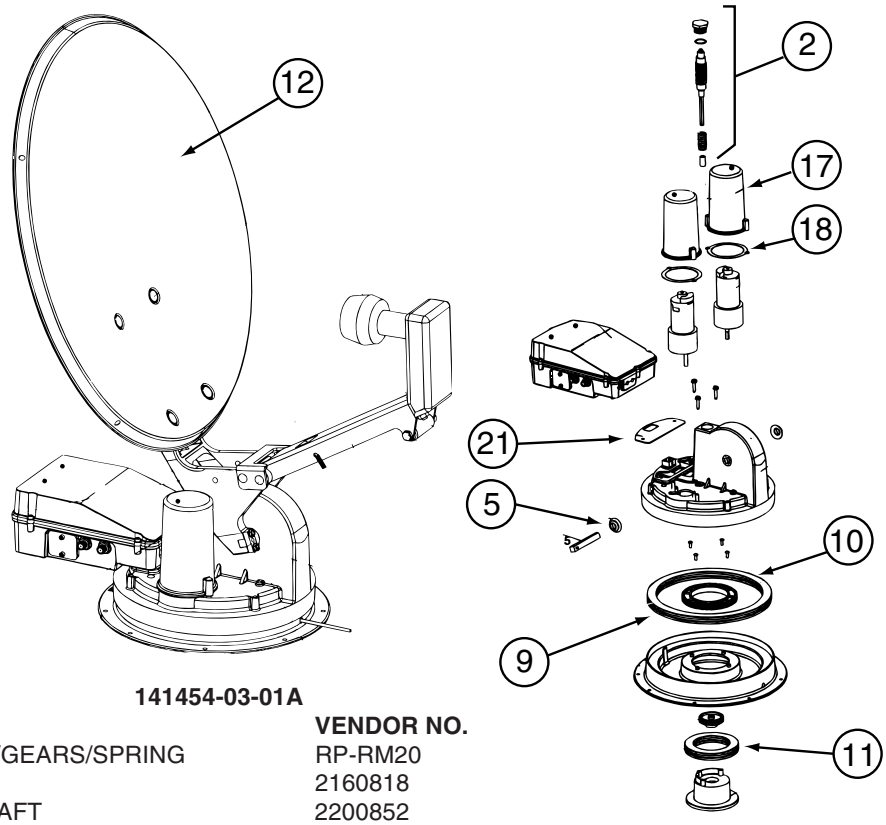

141454-03-01A

KEY	PART NUMBER	U/M	DESCRIPTION	VENDOR NO.
2	141454-01-700	EA	KIT ELEV-SHAFT/GEARS/SPRING	RP-RM20
4	137135-01-705	EA	SPRING	2160818
5	137135-01-707	EA	SEAL - PIVOT SHAFT	2200852
9	137135-01-712	EA	BEARING - OUTER	2590347
10	137135-01-714	EA	GEAR - ELEVATING SHAFT	2200465
10	141454-01-712	EA	GEAR - ROTATE	2200469
11	137135-01-715	EA	BEARING - INNER	2590348
12	137135-01-718	EA	REFLECTOR/WHITE-46CM W/HDWE	RP-35RM
13	137135-01-713	EA	TURRET BASE	3100730
17	141454-01-705	EA	HOUSING - MOTOR	3200260
18	141454-01-706	EA	GASKET - MOTOR HOUSING	2240054
21	141454-01-709	EA	GASKET	2240056
	120233-01-714	EA	CLIP-E	5160818
	137135-01-704	EA	PIN - 1/4" X 3.25"	2160813
	137135-01-719	EA	BRACKET - PIVOT	2744945
	137135-01-722	EA	CLAMP	2590343
	137135-01-723	EA	SUPPORT/FRAME-BACKUP-W/HDWE	RP-RM00
	137135-02-703	EA	LOW NOISE BLOCK FILTER	LB-6000 - DUAL
	141454-01-701	EA	KIT - GEAR/MOTOR-GEAR/ROTATE	RP-RM25
	141454-01-702	EA	HOUSING/ELECTRONICS - UPPER	RP-RM10
	141454-01-703	EA	HOUSING/ELECTRONICS - LOWER	RP-RM15
	141454-01-704	EA	KIT LIFT ASSEMBLY COMPLETE	RP-RM05
	141454-03-700	EA	MOTOR (AZIMUTH)	2665042
	141454-03-701	EA	MOTOR (ELEVATION)	2665041
	141454-03-702	EA	CIRCUIT BOARD(CONTROL BOARD)	RP-RM80
	141454-03-703	EA	CONTRL PANEL W/BOX (AS2003)	RP-AS85

CONTACT WINNEBAGO PART SALES FOR UNLISTED COMPONENT(S)

COPYRIGHT © 2006 WINNEBAGO INDUSTRIES INC.

146298-02-000

KEY	PART NUMBER	U/M	DESCRIPTION	VENDOR NO.
	146298-02-700	EA	REMOTE - TV	1-478-707-11

146299-02-000

KEY	PART NUMBER	U/M	DESCRIPTION	VENDOR NO.
	146299-02-700	EA	REMOTE - TV	1-468-835-11

148231-01-000

KEY	PART NUMBER	U/M	DESCRIPTION	VENDOR NO.
	148231-01-700	EA	REMOTE	RC3100

149040-02-000

KEY	PART NUMBER	U/M	DESCRIPTION	VENDOR NO.
	149040-02-700	EA	REMOTE - TV	RCR311TBM1-RCA

149049-01-000,149049-02-000

KEY	PART NUMBER	U/M	DESCRIPTION	VENDOR NO.
	149049-01-700	EA	REMOTE (TV)	RM-Y1735

153464-01/02/04/05-01A

KEY	PART NUMBER	U/M	DESCRIPTION	VENDOR NO.
	091937-09-700	EA	LENS - LIGHT - FLUORESCENT	D-762

153464-03/06-01A

KEY	PART NUMBER	U/M	DESCRIPTION	VENDOR NO.
	091937-08-700	EA	LENS - LIGHT - FLUORESCENT	D-766

154548-01-000

KEY	PART NUMBER	U/M	DESCRIPTION	VENDOR NO.
	154548-01-700	EA	REMOTE - DVD/VCR	1-478-247-11

155619-01-000

KEY	PART NUMBER	U/M	DESCRIPTION	VENDOR NO.
	155619-01-700	EA	REMOTE	RC3200

COPYRIGHT © 2006 WINNEBAGO INDUSTRIES INC.

ELECTRICAL GROUP (CONTINUED)

CIRCUIT BREAKERS, FUSES & RELAYS

KEY	PART NUMBER	U/M	DESCRIPTION
	008235-01-000	EA	FUSE - 15 AMP/12VOLT - AUTOMOTIVE
	062901-02-000	EA	FUSE - 5 AMP - AUTOMOTIVE
	062901-04-000	EA	FUSE - 10 AMP - AUTOMOTIVE
	062901-05-000	EA	FUSE - 15 AMP - AUTOMOTIVE
	062901-06-000	EA	FUSE - 20 AMP - AUTOMOTIVE
	062901-07-000	EA	FUSE - 25 AMP - AUTOMOTIVE
	062901-08-000	EA	FUSE - 30 AMP - AUTOMOTIVE
	063910-01-000	EA	HOUSING - RELAY
	063912-02-000	EA	RELAY - CANISTER - SPDT
	083209-01-000	EA	CIRCUIT BREAKER - 15 AMP - 120 VOLT - CANADIAN
	083209-02-000	EA	CIRCUIT BREAKER - 15/15 AMP - 120 VOLT
	083209-03-000	EA	CIRCUIT BREAKER - 15/20 AMP - 120 VOLT
	083209-04-000	EA	CIRCUIT BREAKER - 30 AMP - 120 VOLT
	083209-05-000	EA	CIRCUIT BREAKER - 20 AMP - 120 VOLT
	083209-06-000	EA	CIRCUIT BREAKER - 30/15 AMP - 120 VOLT
	083209-07-000	EA	CIRCUIT BREAKER - 20/20 AMP - 120 VOLT
	083209-10-000	EA	CIRCUIT BREAKER - 20/30 AMP - 120 VOLT
	083209-11-000	EA	CIRCUIT BREAKER - 20/15 AMP - 120 VOLT
	092786-01-000	EA	BUSS BAR-2.1" LONG
	092786-03-000	EA	BUSS BAR - 6.9" LONG
	092786-06-000	EA	BUSS BAR
	093654-01-000	EA	CIRCUIT BREAKER - 6 AMP - 12 VOLT - PUSH BUTTON - WHITE
	093654-02-000	EA	CIRCUIT BREAKER - 15 AMP - 12 VOLT - PUSH BUTTON - WHITE
	093654-03-000	EA	CIRCUIT BREAKER - 20 AMP - 12 VOLT - PUSH BUTTON - WHITE
	093654-11-000	EA	COVER - RESET BUTTON
	093655-01-000	EA	CIRCUIT BREAKER - 25 AMP - 12 VOLT - PUSH BUTTON - WHITE
	093655-02-000	EA	CIRCUIT BREAKER - 30 AMP - 12 VOLT - PUSH BUTTON - WHITE
	093655-03-000	EA	CIRCUIT BREAKER - 40 AMP - 12 VOLT - PUSH BUTTON - WHITE
	097611-01-000	EA	CIRCUIT BREAKER - 10 AMP
	097611-02-000	EA	CIRCUIT BREAKER - 30 AMP
	097611-03-000	EA	CIRCUIT BREAKER - 20 AMP
	100341-01-000	EA	FUSE HOLDER - IN LINE TYPE
	106656-01-000	EA	FUSE BLOCK - 4 CAVITY - AUTOFUSE
	113482-01-000	EA	CIRCUIT BREAKER - 55 AMP - MANUAL
	115187-01-000	EA	FUSE - 300 AMP - NON-DELAY
	115187-02-000	EA	HOLDER - FUSE
	115187-03-000	EA	FUSE - 60 AMP - NON-DELAY
	122811-01-000	EA	CIRCUIT BREAKER - 20/50/50/20 AMP - 250V
	125986-02-000	EA	FUSE - 5 AMP - AUTO - MINI BLADE
	125986-05-000	EA	FUSE - 15 AMP - AUTO - MINI BLADE
	141789-01-000	EA	SPACER - CIRCUIT BREAKER

COPYRIGHT © 2006 WINNEBAGO INDUSTRIES INC.

ELECTRICAL GROUP (CONTINUED)

CONVERTER, INVERTER & LOAD CENTER

KEY	PART NUMBER	U/M	DESCRIPTION
	123058-01-000	EA	CONVERTER - 55 AMP - ELECTRONIC - 4 1/8"H X 7"W X 12 3/8"L
	148254-03-000	EA	CABLE/INVERTOR - W/8 PIN MODULAR PHONE JACK - 50'-DIMEN
	154511-01-000	EA	INVERTER - 600 WATT - W/O REMOTE PANEL
	154511-02-000	EA	REMOTE/PANEL - INVERTER/600 WATT
	154367-03-02B	EA	BRACKET/MOUNT - INVERTER - E-COATED

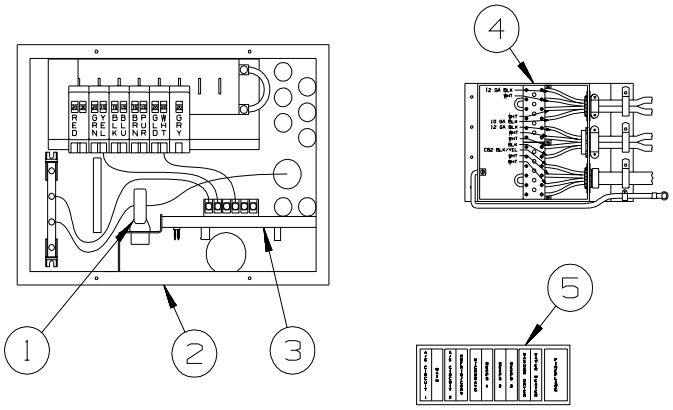

30 AMP

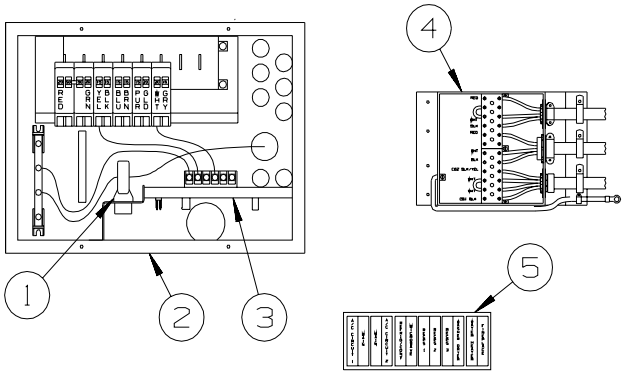

50 AMP

KEY	PART NUMBER	U/M	DESCRIPTION
1	127002-07-000	EA	SENSOR - CURRENT
2	141258-01-000	EA	LOAD CENTER - 120/240 - 30/50 AMP
2	141258-02-000	EA	LOAD CENTER - COVER
3	127002-11-000	EA	MODULE - EMS CENTER - W/REMOTE SENSOR
4	106071-06-000	EA	SWITCH - AUTOMATIC TRANSFER - PARALLAX 5070 - 30/50 AMP
5	095721-46 -000	EA	LABEL - CONTROL CENTER - 30 AMP
5	095721-47-000	EA	LABEL - CONTROL CENTER - 50 AMP - 50 AMP ELECTRICAL SYSTEM

COPYRIGHT © 2006 WINNEBAGO INDUSTRIES INC.

ELECTRICAL GROUP (CONTINUED)

BOXES & CORDS

KEY	PART NUMBER	U/M	DESCRIPTION
	008054-01-000	EA	CORD - POWER - 10/3 WIRE - 30 AMP - 25'
	108934-02-000	EA	CORD - POWER - 50 AMP - 4-WIRE - 36'
	115832-01-000	FT	CORD - HEAVY DUTY - 14-2 W/GROUND
	131679-01-000	EA	BOX/ELECTRIC-WATERPROOF-4" X 4" - W/4 3/4"OUTLETS-UL/CSA
	131680-01-000	EA	COVER - F/ELECTRIC BOX W/GASKET 4" X 4" - UL/CSA
	133070-01-000	EA	BOX - ELECTRIC/PLASTIC - 3" X 2" X 2.8" - UL
	133070-02-000	EA	BOX - ELECTRIC/PLASTIC - 3" X 2" X 2.8" - CSA

WIRE ASSEMBLIES

KEY	PART NUMBER	U/M	DESCRIPTION
	077069-02-000	EA	CABLE/EXTENSION - RADIO ANTENNA - 96"
	077069-03-000	EA	CABLE/EXTENSION - RADIO ANTENNA - 260"
	108029-03-000	EA	WIRE ASSEMBLY - POWER PASSENGER SEAT
	117420-04-000	EA	CABLE - RCA - (MALE/MALE) - 50 FT
	125853-04-000	EA	WIRE LOOM - ENTERTAINMENT CENTER
	126030-01-000	EA	WIRE ASM-WIPER/WASHER
	135131-01-000	EA	WIRE LOOM - THERMOSTAT
	135420-02-000	EA	WIRE LOOM - RADIO FROM: 00-00-00 THRU: 05-29-05
	135420-16-000	EA	WIRE LOOM - RADIO FROM: 05-30-05 THRU: 99-99-99
	136028-01-000	EA	WIRE ASM-SOFA,REST EASY
	136860-02-000	EA	CABLE - RCA - #3 MALE TO #50F MALE CONNECTOR
	137135-03-000	EA	WIRE LOOM - DIGITAL ELEVATION SENSOR
	137135-04-000	EA	WIRE HARNESS - POWER - DIGITAL ELEVATION SENSOR
	137626-03-000	EA	WIRE - OVERDRIVE SWITCH
	139583-01-000	EA	WIRE LOOM - SOFA/DOUBLE REST EASY
	139583-02-000	EA	WIRE LOOM - SOFA/REAR SWITCH
	140167-01-000	EA	WIRE LOOM - GPS ADAPTER
	141454-04-000	EA	WIRE - SATELLITE - AUTOMATIC
	142258-02-000	EA	WIRE LOOM - VIDEO SWITCH/POWER SUPPLY
	143545-01-000	EA	WIRE ASSEMBLY - REAR MONITOR
	143545-02-000	EA	WIRE ASSEMBLY - REAR MONITOR - VIDEO CAMERA SYSTEM
	145210-01-000	FT	CABLE - COAXIAL
	147139-02-000	EA	WIRE - STEREO KIT - ASA 100ZXIHAR
	147313-01-000	EA	WIRE - OUTSIDE TEMP SENSOR - W/O SENSOR
	149750-02-000	EA	CABLE - (RECEIVER TO MODULE) - 45'
	151316-02-000	EA	WIRE ASM - W/NON CONTACT SENSORS - GREY WATER - 23.6"
	151317-01-000	EA	WIRE ASM-W/NO CONTACT SENSORS - FRESH WATER/BLK TANK - MALE PLUG - 3.9"
	151317-02-000	EA	WIRE ASM-W/NO CONTACT SENSORS - FRESH WATER/BLK TANK - MALE PLUG - 23.6"
	153324-01-000	EA	WIRE ASSEMBLY - FOG LIGHT
	155505-01-000	EA	WIRE ASSEMBLY - ADAPTER/HEADLIGHT

COPYRIGHT © 2006 WINNEBAGO INDUSTRIES INC.

ELECTRICAL GROUP (CONTINUED)

CONNECTORS & CONDUIT

KEY	PART NUMBER	U/M	DESCRIPTION
	007940-01-000	EA	RECEPTACLE/SLIDE 16 TO 12 AWG - FEMALE END
	007940-02-000	EA	RECEPTACLE/SLIDE 10 AWG
	007954-01-000	EA	RECEPTACLE - HOUSING - 6 POSITION
	007956-05-000	EA	INSULATOR - SHRINK - 1/4"ID X 1 1/2"
	008058-01-000	EA	ADAPTER - POWER CORD - 30 AMP TO 15 AMP
	008311-01-000	EA	CONNECTOR - WIRE NUT - INSULATED - RED
	008312-01-000	EA	CONNECTOR - WIRE NUT - INSULATED - BLUE
	008313-01-000	EA	CONNECTOR - WIRE NUT - INSULATED - YELLOW
	008314-01-000	EA	CONNECTOR - WIRE NUT - INSULATED - GRAY
	008328-01-000	EA	TERMINAL - RING - 12/10 WIRE - #10 STUD FIT
	008331-01-000	EA	TERMINAL - RING - TONGUE - #4 WIRE - 3/8" STUD - COPPER
	008348-01-000	EA	TERMINAL - RING - 3/8" STUD 2 GA. WIRE
	008355-01-000	EA	CONNECTOR - CABLE CLAMPING - 3/4"
	008356-01-000	EA	CONNECTOR - PLASTIC - 3/8"
	008356-02-000	EA	CONNECTOR - PLASTIC - 21/32"
	008398-01-000	EA	CONNECTOR - 1/2" X 90 DEGREE - FLEX CONDUIT - UL & CSA
	035416-04-000	EA	TERMINAL - RING - #10 STUD FIT - INSULATED BARREL #16/14
	041953-01-000	FT	CONDUIT - CONVOLUTE SLIT - .5" ID - POLYETHYLENE
	041953-02-000	FT	CONDUIT - CONVOLUTE SLIT - .6" ID - POLYETHYLENE
	041953-03-000	FT	CONDUIT - CONVOLUTE SLIT - 1" ID (CLOTHES ROD COVER)
	041953-06-000	FT	CONDUIT - CONVOLUTE SLIT - .4" ID - POLYETHYLENE
	041953-07-000	FT	CONDUIT - CONVOLUTE SLIT - .25" ID - POLYETHYLENE
	041953-08-000	FT	CONDUIT - CONVOLUTE SLIT - 1.5" ID - POLYETHYLENE
	041953-09-000	FT	CONDUIT - CONVOLUTE SLIT - .5" ID - NYLON
	041953-10-000	FT	CONDUIT - CONVOLUTE SLIT - .75" ID - NYLON
	041953-11-000	FT	CONDUIT - CONVOLUTE SLIT - 1.06" ID - NYLON
	041953-12-000	FT	CONDUIT - CONVOLUTE SOLID - 1.1" ID - NYLON
	041953-13-000	FT	CONDUIT - CONVOLUTE SLIT - 1.25" ID
	041953-14-000	FT	CONDUIT - CONVOLUTE SLIT - 1.5" ID
	041953-15-000	FT	CONDUIT - CONVOLUTE SLIT - 2"
	047443-01-000	EA	TERMINAL - .250 RECEPTACLE FIT - INSULATED - 16/14 AWG
	047443-02-000	EA	TERMINAL - .250 RECEPTACLE FIT - INSULATED - 12/10 AWG
	047443-05-000	EA	TERMINAL - .250 RECEPTICLE FIT - 18GA AWG
	058028-01-000	EA	CONNECTOR - ELECTRICAL PIGTAIL - NYLON - CLEAR
	077479-01-000	EA	BOOT - BATTERY TERMINAL - DOUBLE CABLE
	077479-02-000	EA	BOOT - BATTERY TERMINAL - SINGLE CABLE
	080015-02-000	EA	RECEPTACLE - FLAG - .185 - 16/14 GAUGE
	080015-03-000	EA	RECEPTACLE - FLAG - .250 - 14/16 GAUGE
	080015-04-000	EA	RECEPTACLE - FLAG - .187 - 16/14 GAUGE
	082109-01-000	EA	HOUSING - CONNECTOR - PACKARD
	087225-01-000	FT	SLEEVING - 1/2" - TYPE H
	087949-01-000	EA	BUSS BAR - 2 POSITION - .6" X 1.5"
	088473-01-000	EA	HOUSING - PIN - 12 CAVITY (3 ROWS OF 4)
	088473-02-000	EA	HOUSING - PIN - 15 CAVITY (3 ROWS OF 5)
	088473-03-000	EA	HOUSING - PIN - 9 CAVITY (3 ROWS OF 3)
	088473-04-000	EA	HOUSING - PIN - 8 CAVITY IN-LINE
	088473-06-000	EA	HOUSING - PIN - 6 CAVITY (2 ROWS OF 3)
	088473-07-000	EA	HOUSING - PIN - 5 CAVITY - IN-LINE
	088473-08-000	EA	HOUSING - PIN - 4 CAVITY - IN-LINE
	088473-09-000	EA	HOUSING - PIN - 3 CAVITY - IN-LINE
	088473-10-000	EA	HOUSING - PIN - 2 CAVITY - IN-LINE
	088473-12-000	EA	HOUSING - PIN - 3 CAVITY - BLUE
	088473-13-000	EA	HOUSING - PIN - 3 CAVITY - GREEN
	088473-14-000	EA	HOUSING - PIN - 3 CAVITY - RED
	088474-01-000	EA	HOUSING - SOCKET - 12 CAVITY
	088474-02-000	EA	HOUSING - SOCKET - 15 CAVITY
	088474-03-000	EA	HOUSING - SOCKET - 9 CAVITY
	088474-06-000	EA	HOUSING - SOCKET - 6 CAVITY
	088474-07-000	EA	HOUSING - SOCKET - 5 CAVITY
	088474-08-000	EA	HOUSING - SOCKET - 4 CAVITY
	088474-09-000	EA	HOUSING - SOCKET - 3 CAVITY
	088474-10-000	EA	HOUSING - SOCKET - 2 CAVITY
	088475-01-000	EA	PIN - CONNECTOR - 14-20 AWG
	088475-02-000	EA	PIN - CONNECTOR - 10-12 AWG

COPYRIGHT © 2006 WINNEBAGO INDUSTRIES INC.

ELECTRICAL GROUP (CONTINUED)

CONNECTORS & CONDUIT (CONTINUED)

KEY	PART NUMBER	U/M	DESCRIPTION
	088476-01-000	EA	TERMINAL - ELECTRICAL
	088476-02-000	EA	SOCKET - CONNECTOR - 12-10 GA - PRE-TIN
	098261-01-000	EA	SOCKET - CONNECTOR - WEATHERPACK - 12 AWG
	098261-02-000	EA	SOCKET - CONNECTOR - WEATHERPACK - 14-18 AWG
	098262-01-000	EA	SEAL - CONNECTOR - WEATHERPACK
	098264-01-000	EA	HOUSING - 2 PIN - WEATHER PACK - MALE W/FEMALE PINS
	098264-02-000	EA	HOUSING - 2 PIN - WEATHER PACK - FEMALE W/MALE PINS
	098265-02-000	EA	PIN - CONNECTOR - WEATHER PACK
	102777-02-000	EA	TERMINAL - RING - #6 STUD - 10 AWG
	103608-01-000	EA	SOCKET - WEDGE BASE W/LEADS
	104100-01-000	EA	HOUSING - 1 POSITION - 75 AMPS
	104100-03-000	EA	TERMINAL - 75 AMP
	106007-02-000	EA	TERMINAL - FEMALE - 10-12 AWG
	110178-01-000	EA	HOUSING - WIPER MOTOR
	112823-01-000	EA	SPLICE - REDUCER - 16-14 TO 18-22
	113135-01-000	EA	TERMINAL - FEMALE - M/P - 14-16 - F/SEALED TERMINAL
	113308-01-000	EA	TERMINAL - FEMALE - M/P - 14-16 - 280
	115931-02-000	EA	COVER - CONNECTOR - 50 AMP W/LOCKING RING
	115932-02-000	EA	CONNECTOR - FEMALE - 50 AMP/240 VOLT
	118571-01-000	EA	CONNECTOR - 3-WAY - MALE/SEALED
	118571-02-000	EA	CONNECTOR - 3-WAY - FEMALE/SEALED
	118571-05-000	EA	LOCK - SECONDARY - FEMALE
	118571-06-000	EA	LOCK - SECONDARY - MALE
	118820-01-000	EA	INSULATOR - TERMINAL
	129233-01-000	EA	HOUSING - 2-POSITION/FEMALE - 280-SERIES
	131681-01-000	EA	CONNECTOR - 3/4" SO CORD - UL/CS
	137207-01-000	EA	HOUSING - PIN - 2 CAVITY/HIGH AMP
	137208-01-000	EA	HOUSING - SOCKET - 2 CAVITY/HIGH AMP
	137209-01-000	EA	PIN - CONNECTOR - 10 AWG/HIGH AMP
	137210-01-000	EA	SOCKET - CONNECTOR - 10 AWG/HIGH AMP
	142520-01-000	EA	TERMINAL - FEMALE - MINI-FIT 16
	142522-02-000	EA	HOUSING - 6 PIN/MALE - MINI FIT
	142522-04-000	EA	HOUSING - 10 PIN/MALE - MINI FIT
	142522-05-000	EA	HOUSING - 12 PIN/MALE - MINI FIT
	142522-06-000	EA	HOUSING - 14 PIN/MALE - MINI FIT
	142524-01-000	EA	HOUSING - 4 PIN/FEMALE - WEATHER PACK
	142524-02-000	EA	HOUSING - 4 PIN/FEMALE - WEATHER PACK
	144283-01-000	EA	CONNECTOR - 110V - F/USE WITH SOW WIRE - BLUE
	144283-02-000	EA	CONNECTOR - 110V - F/USE WITH NM ROMEX WIRE - CLEAR
	145171-01-000	EA	CONNECTOR - COAXIAL
	148335-01-000	EA	HOUSING - 8-POSITION/MALE - 280-GT SERIES
	148335-02-000	EA	HOUSING - 4-POSITION/MALE - 280-GT SERIES
	149686-01-000	EA	TERMINAL - .250 RECEPTACLE
	149687-01-000	EA	HOUSING - 2 POSITION/MALE - PACKARD
	149687-02-000	EA	LOCK - F/2 POSITION HOUSING - PACKARD
	149688-01-000	EA	TERMINAL - MALE - 16 GAUGE WIRE
	154799-01-000	EA	HOUSING - 4-POSITION/FEMALE - 150-SERIES
	154799-02-000	EA	LOCK - SECONDARY - 4 POSITION
	156035-01-000	EA	HOUSING - 12-POSITION/FEMALE - 280-GT SERIES
	156041-01-000	EA	TERMINAL - FEMALE - 16-12 - 280-GT SERIES
	156043-01-000	EA	HOUSING - 2-POSITION/FEMALE - 480-MP SERIES
	156043-02-000	EA	LOCK - F/2 POSITION HOUSING - 480 SERIES
	156044-01-000	EA	TERMINAL - FEMALE - 16-12 - 280-GT - F/SEALED HOUSING
	156045-01-000	EA	HOUSING - 10-POSITION/FEMALE - 280-GT SERIES
	156045-02-000	EA	HOUSING - 4-POSITION/FEMALE - 280-GT SERIES

COPYRIGHT © 2006 WINNEBAGO INDUSTRIES INC.

ELECTRICAL GROUP (CONTINUED)

CHASSIS

KEY	PART NUMBER	U/M	DESCRIPTION
	065450-05-000	EA	TIEDOWN - BATTERY - 8.4" TUBE
	065451-05-000	EA	BRACKET/TIEDOWN - BATTERY - 7.7" FROM BRKT TO BRKT

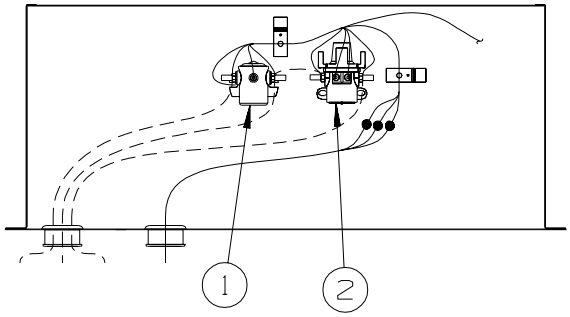

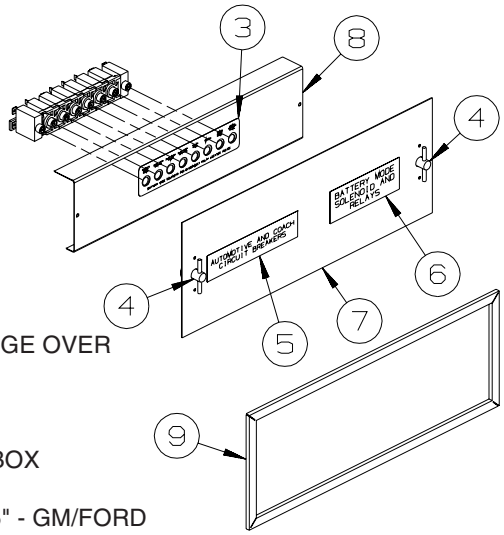

KEY	PART NUMBER	U/M	DESCRIPTION
1	008188-01-000	EA	SOLENOID - 3 POST - BATTERY CHANGE OVER
2	086273-01-000	EA	RELAY - BATTERY DISCONNECT
3	093236-35-000	EA	LABEL - CIRCUIT BREAKER
4	098196-01-000	EA	LATCH - 1/4 TURN - T-BAR
5	098379-01-000	EA	LABEL - CIRCUIT BREAKER - FRONT BOX
6	098379-04-000	EA	LABEL - ELECTRICAL BOX - SIDE
7	109925-04-000	EA	DOOR - ELECTRICAL BOX - 6.9" X 18.5" - GM/FORD
8	118531-02-02B	EA	PLATE - CIRCUIT BREAKER - E COATED
9	092492-11-000	EA	SEAL - ELECTRIC BOX - 7” X 18.4”

COPYRIGHT © 2006 WINNEBAGO INDUSTRIES INC.

EXTERIOR BODY GROUP

GRAPHICS & PAINT

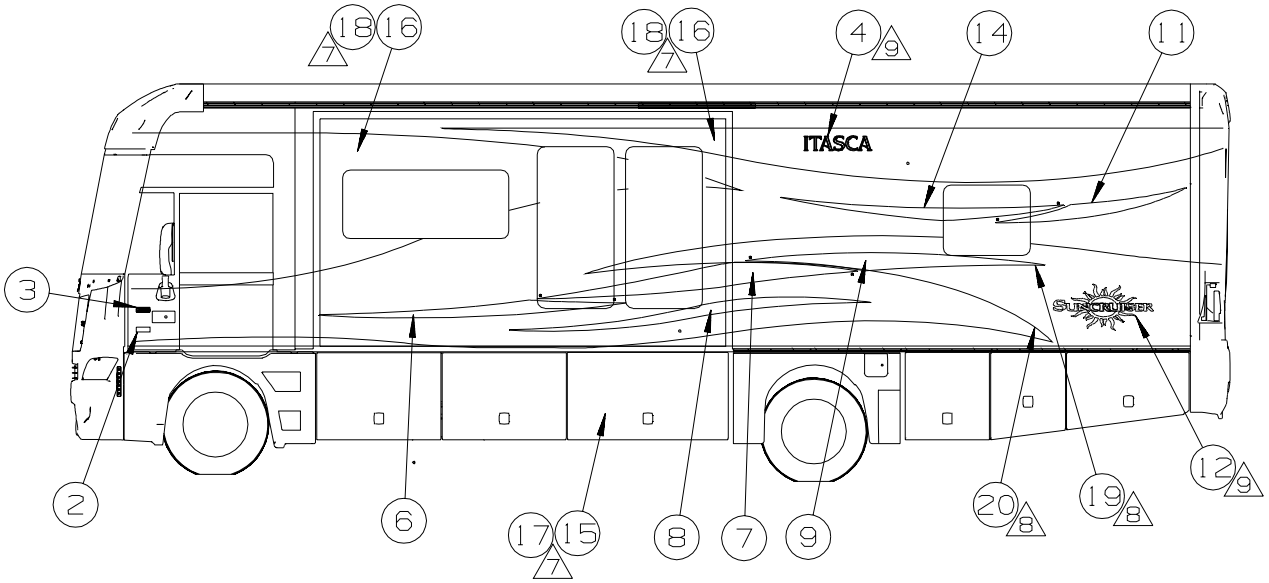

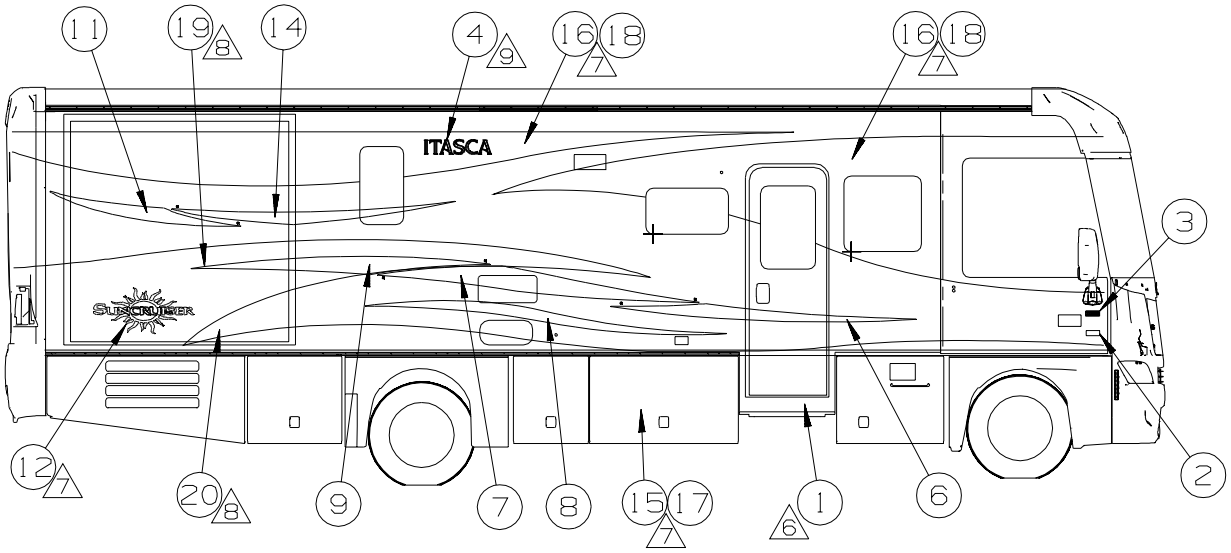

GRAPHICS

NOTES:

1. APPLY PROTECTOR 116424-01-000 TO WATER HEATER DOOR LATCH.
4. ON FULL BODY PAINTED UNITS USE 145487-02-000 (100 FT) TO COVER UNSEALED ROOF SEAMS.

△2 CENTER ON UNIT.

△3 CLEAR COAT TO BE APPLIED ON ENTIRE UNIT TO PROTECT PAINT.

△5 DIE CUT ACRYLIC 3M FILM,USED TO PROTECT FULL BODY PAINTED UNITS.

△6 FILM TO PROTECT BOTTOM OF DOOR FROM SCUFF MARKS.

△7 CLEAR COAT TO BE APPLIED TO PAINT AREAS TO PROTECT PAINT.

△8 PAINT MASK TO BE REMOVED AFTER PAINT.

△9 LOGO IS TO BE HELD TO ± 1MM ON A HORIZONTAL PLANE (END TO END).

10. END PANELS OF SLIDEOUT ROOMS WILL BE PAINTED WITH BASE COAT AND CLEAR COAT ONLY. THERE WILL BE NO COLORED DESIGN GRAPHIC ELEMENTS PAINTED ON END PANELS.

(16L) FORD 22,000#-22.5 AL WHL
(24P) MASK FRONT EXT PROTECTIVE
(92A) EXT FULL BODY PAINT PKG # 2
(27A) EXT FULL BODY PAINT PKG #1
(92K) EXTERIOR GRAPHICS PACKAGE #2
(27G) EXTERIOR GRAPHICS PACKAGE #1

COPYRIGHT © 2006 WINNEBAGO INDUSTRIES INC.

EXTERIOR BODY GROUP (CONTINUED)

GRAPHICS & PAINT (CONTINUED)

KEY	PART NUMBER	U/M	DESCRIPTION
1	109506-01-000	EA	FILM-URETHANE PROTECTION
2	129922-02-CHT(01A)	EA	EMBLEM-TRITION V10 - BLACK/CHROME
3	132664-02-CHT(01A)	EA	DECAL-WINNEBAGO,DOMED - CHROME/RED/BLACK
(27G) 4	144587-02-CHT(19A)	EA	DECAL-ITASCA - CHOCOLATE BROWN/BRT WHITE
4 (92K)	144587-02-CHT(04A)	EA	DECAL-ITASCA - DEEPBLUE STAR/BRT WHITE
5	151687-02-CHT(01A)	EA	DECAL-BEZEL,ITASCA,DOMED - CHROME/WHITE/BLACK/TEAL
(27G) 6	153060-01-CHT(01A)	EA	DECAL-POINT,FRT,RH - CHAMPAGNE STAR/GOLD
6 (92K)	153060-01-CHT(02A)	EA	DECAL-POINT,FRT,RH - SILVER/MED BLUE
(27G) 6	153060-02-CHT(01A)	EA	DECAL-POINT,FRT,LH - CHAMPAGNE STAR/GOLD
6 (92K)	153060-02-CHT(02A)	EA	DECAL-POINT,FRT,LH - SILVER/MED BLUE
(27G) 7	153062-01-CHT(01A)	EA	DECAL-SWEEP,MID,RH - CHAMPAGNE STAR
7 (92K)	153062-01-CHT(02A)	EA	DECAL-SWEEP,MID,RH - SILVER
(27G) 7	153062-02-CHT(01A)	EA	DECAL-SWEEP,MID,LH - CHAMPAGNE STAR
7 (92K)	153062-02-CHT(02A)	EA	DECAL-SWEEP,MID,LH - SILVER
(27G) 8	153063-01-CHT(01A)	EA	DECAL-SWEEP,LWR,RH - CHOCOLATE BROWN
8 (92K)	153063-01-CHT(02A)	EA	DECAL-SWEEP,LWR,RH - DEEP BLUE STAR
(27G) 8	153063-02-CHT(01A)	EA	DECAL-SWEEP,LWR,LH - CHOCOLATE BROWN
8 (92K)	153063-02-CHT(02A)	EA	DECAL-SWEEP,LWR,LH - DEEP BLUE STAR
(27G) 9	153065-01-CHT(01A)	EA	DECAL-POINT,RR,RH - BROWN/CHAMPAGNE STAR
9 (92K)	153065-01-CHT(02A)	EA	DECAL-POINT,RR,RH - MED DK ROYAL BLUE/SILVER
(27G) 9	153065-02-CHT(01A)	EA	DECAL-POINT,RR,LH - BROWN/CHAMPAGNE STAR
9 (92K)	153065-02-CHT(02A)	EA	DECAL-POINT,RR,LH - MED DK ROYAL BLUE/SILVER
(27G) 10	153072-01-CHT(01A)	EA	DECAL-SWEEPS - CHAMPAGNE STAR/GOLD/CHOCOLATE BROWN
10 (92K)	153072-01-CHT(02A)	EA	DECAL-SWEEPS - SILVER/MED BLUE/DEEP BLUE STAR
(27G) 11	153076-01-CHT(01A)	EA	DECAL-SWEEP,UPPER,RR,RH - GOLD/CHAMPAGNE STAR
11 (92K)	153076-01-CHT(02A)	EA	DECAL-SWEEP,UPPER,RR,RH - MED BLUE/SILVER
(27G) 11	153076-02-CHT(01A)	EA	DECAL-SWEEP,UPPER,RR,LH - GOLD/CHAMPAGNE STAR
11 (92K)	153076-02-CHT(02A)	EA	DECAL-SWEEP,UPPER,RR,LH - MED BLUE/SILVER
(27G) 12	153078-01-CHT(01A)	EA	DECAL-SUNCRUISER,LG - LT MED TITANIUM/CHOCOLATE BROWN
12 (92K)	153078-01-CHT(02A)	EA	DECAL-SUNCRUISER,LG - LT GRANITE/DEEP BLUE STAR
(27G) 13	153078-02-CHT(01A)	EA	DECAL-SUNCRUISER,SML - LT MED TITANIUM/CHOCOLATE BROWN
13 (92K)	153078-02-CHT(02A)	EA	DECAL-SUNCRUISER,SML - LT GRANITE/DEEP BLUE STAR
(27G) 14	153087-01-CHT(01A)	EA	DECAL-SWEEP,UPPER,FRT,RH - CHAMPAGNE STAR
14 (92K)	153087-01-CHT(02A)	EA	DECAL-SWEEP,UPPER,FRT,RH - SILVER
(27G) 14	153087-02-CHT(01A)	EA	DECAL-SWEEP,UPPER,FRT,LH - CHAMPAGNE STAR
14 (92K)	153087-02-CHT(02A)	EA	DECAL-SWEEP,UPPER,FRT,LH - SILVER
(27G) 15	141599-42-000	GL	PAINT-DK TITANIUM MET - DUPONT #373-P76528
(27G) 16	141599-40-000	GL	PAINT-LT BRONZEMIST MET - DUPONT #373-P7442
17 (92K)	141599-22-000	GL	PAINT-GRANITE MET - DUPONT #373-P7433
18 (92K)	141599-41-000	GL	PAINT-FORD SILVER MET - DUPONT #373-P7444
(8) 19	155128-01-CHT(01A)	EA	DECAL-PAINT MASK POINT,UPPER,RR,RH
19 (8)	155128-02-CHT(01A)	EA	DECAL-PAINT MASK POINT,UPPER,RR,LH
(8) 20	155138-01-CHT(01A)	EA	DECAL-PAINT MASK POINT,LOWER,RR,RH
20 (8)	155138-02-CHT(01A)	EA	DECAL-PAINT MASK POINT,LOWER,RR,LH
(3) 21	141599-27-000	GL	PAINT-IMRON CLEAR 55GL - DUPONT 3440S

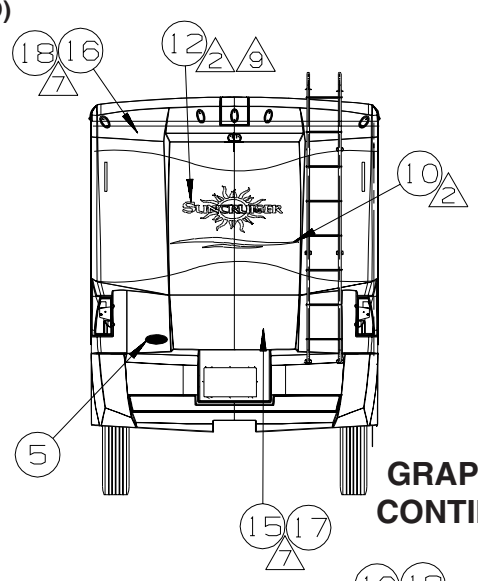

GRAPHICS CONTINUED

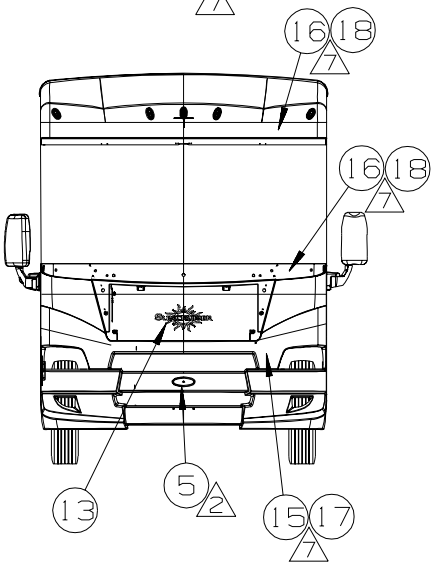

COPYRIGHT © 2006 WINNEBAGO INDUSTRIES INC.

EXTERIOR BODY GROUP (CONTINUED)

GRAPHICS & PAINT (CONTINUED)

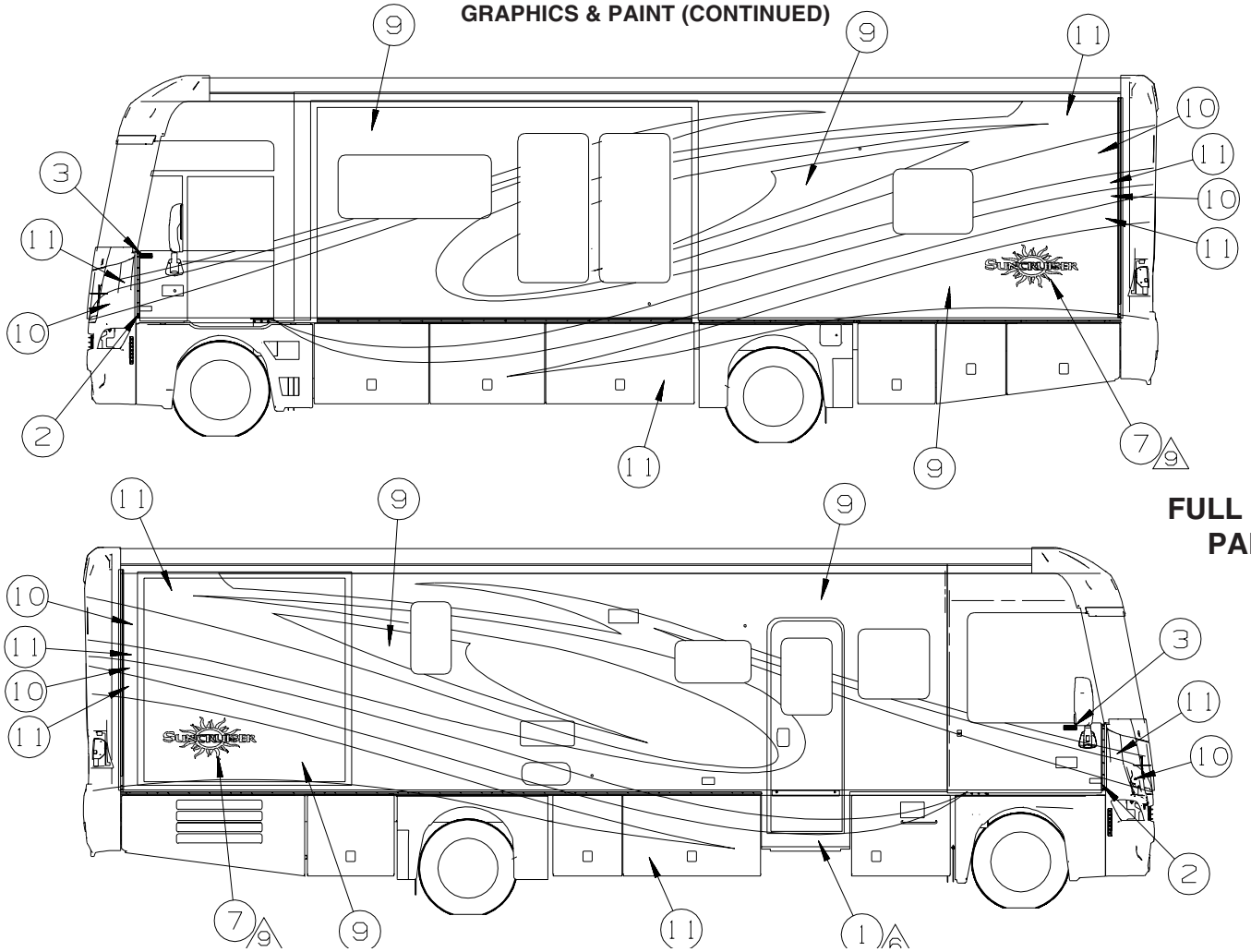

FULL BODY PAINT

NOTES:

1. APPLY PROTECTOR 116424-01-000 TO WATER HEATER DOOR LATCH.
2. CENTER ON UNIT.
3. CLEAR COAT TO BE APPLIED ON ENTIRE UNIT TO PROTECT PAINT.
4. ON FULL BODY PAINTED UNITS USE 145487-02-000 (100 FT) TO COVER UNSEALED ROOF SEAMS.
5. DIE CUT ACRYLIC 3M FILM,USED TO PROTECT FULL BODY PAINTED UNITS.
6. FILM TO PROTECT BOTTOM OF DOOR FROM SCUFF MARKS.
7. CLEAR COAT TO BE APPLIED TO PAINT AREAS TO PROTECT PAINT.
8. PAINT MASK TO BE REMOVED AFTER PAINT.
9. LOGO IS TO BE HELD TO ± 1MM ON A HORIZONTAL PLANE (END TO END).
10. END PANELS OF SLIDEOUT ROOMS WILL BE PAINTED WITH BASE COAT AND CLEAR COAT ONLY. THERE WILL BE NO COLORED DESIGN GRAPHIC ELEMENTS PAINTED ON END PANELS.

(16L) FORD 22,000#-22.5 AL WHL
(24P) MASK FRONT EXT PROTECTIVE
(92A) EXT FULL BODY PAINT PKG # 2
(27A) EXT FULL BODY PAINT PKG #1
(92K) EXTERIOR GRAPHICS PACKAGE #2
(27G) EXTERIOR GRAPHICS PACKAGE #1

COPYRIGHT © 2006 WINNEBAGO INDUSTRIES INC.

EXTERIOR BODY GROUP (CONTINUED)

GRAPHICS & PAINT (CONTINUED)

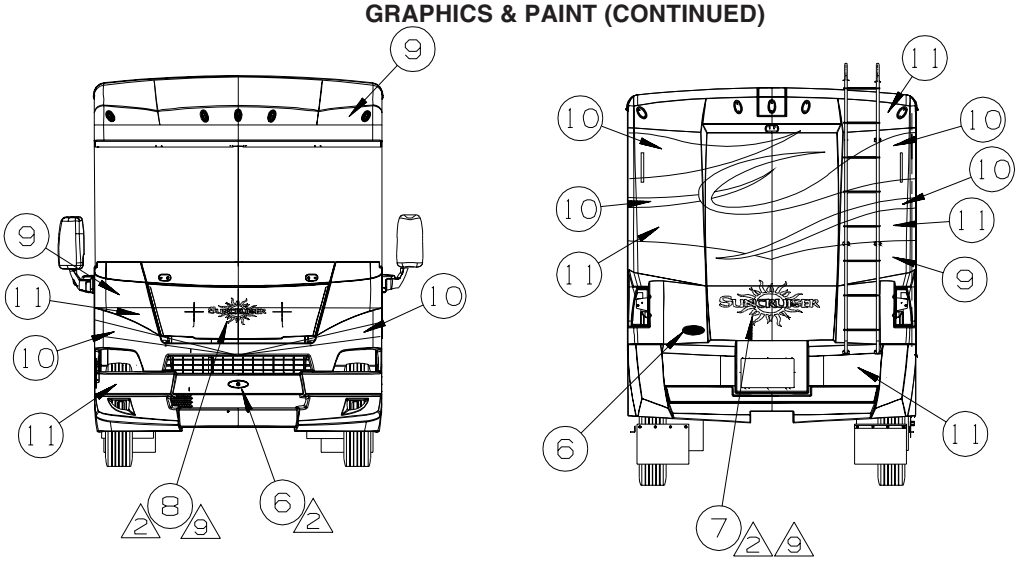

FULL BODY PAINT CONTINUED

27A	KEY	PART NUMBER	U/M	DESCRIPTION - DEEP FOREST
	1	109506-01-000	EA	FILM-URETHANE PROTECTION
16L	2	129922-02-CHT(01A)	EA	EMBLEM-TRITON V10 - BLACK/CHROME
	3	132664-02-CHT(01A)	EA	DECAL-WINNEBAGO,DOMED - CHROME/RED/BLACK
24P	4 3 5	----------	GL	PAINT-CLEAR COAT - SHERWIN WILLIAMS
	5	143369-01-000	EA	KIT-3M PAINT PROTECTION
	6	151687-02-CHT(01A)	EA	DECAL-BEZEL,ITASCA,DOMED - CHROME/WHITE/BLACK/TEAL
	7	153826-01-CHT(01A)	EA	DECAL-SUNCRUISER,DOMED,LG - DK GREEN/LT DK BEIGE
	8	153826-02-CHT(01A)	EA	DECAL-SUNCRUISER,DOMED,SML - DK GREEN/LT DK BEIGE
	9	----------	GL	PAINT-FOREST GREEN MET - SHERWIN WILLIAMS #62494
	10	----------	GL	PAINT-POLISHED PEWTER MET - SHERWIN WILLIAMS #63499
	11	----------	GL	PAINT-DK BEIGE MET - SHERWIN WILLIAMS #57776

92A	KEY	PART NUMBER	U/M	DESCRIPTION - VERMILLION
	1	109506-01-000	EA	FILM-URETHANE PROTECTION
16L	2	129922-02-CHT(01A)	EA	EMBLEM-TRITON V10 - BLACK/CHROME
	3	132664-02-CHT(01A)	EA	DECAL-WINNEBAGO,DOMED - CHROME/RED/BLACK
24P	4 3 5	----------	GL	PAINT-CLEAR COAT - SHERWIN WILLIAMS
	5	143369-01-000	EA	KIT-3M PAINT PROTECTION
	6	151687-02-CHT(01A)	EA	DECAL-BEZEL,ITASCA,DOMED - CHROME/WHITE/BLACK/TEAL
	7	153826-01-CHT(02A)	EA	DECAL-SUNCRUISER,DOMED,LG - SEDONA/LT MOJAVE
	8	153826-02-CHT(02A)	EA	DECAL-SUNCRUISER,DOMED,SML - SEDONA/LT MOJAVE
	9	----------	GL	PAINT-MOJAVE MIST MET - SHERWIN WILLIAMS #64139
	10	----------	GL	PAINT-SEDONA MET - SHERWIN WILLIAMS #63814
	11	----------	GL	PAINT-LT ALMOND PRL - SHERWIN WILLIAMS #61894

KEY	PART NUMBER	U/M	DESCRIPTION
	004308-01-000	EA	PAINT - BLACK SPRAY
	093681-39-01A	FT	FILM - 3.1" - FLAT BLACK - SLIDEOUT ROOMS
	093681-40-01A	FT	FILM - 2" - FLAT BLACK - DRIVERS DOOR
	072882-01-000	EA	PAINT - 16 OUNCE SPRAY - OFF WHITE

DUPONT COLOR CODES ARE NOW FOUND IN THE PAINT CODE MANUAL.
YOU CAN FIND THIS MANUAL ON YOUR DEALER INDEX WEBPAGE UNDER SERVICE.

COPYRIGHT © 2006 WINNEBAGO INDUSTRIES INC.

EXTERIOR BODY GROUP (CONTINUED)

PANELS & TRIMS

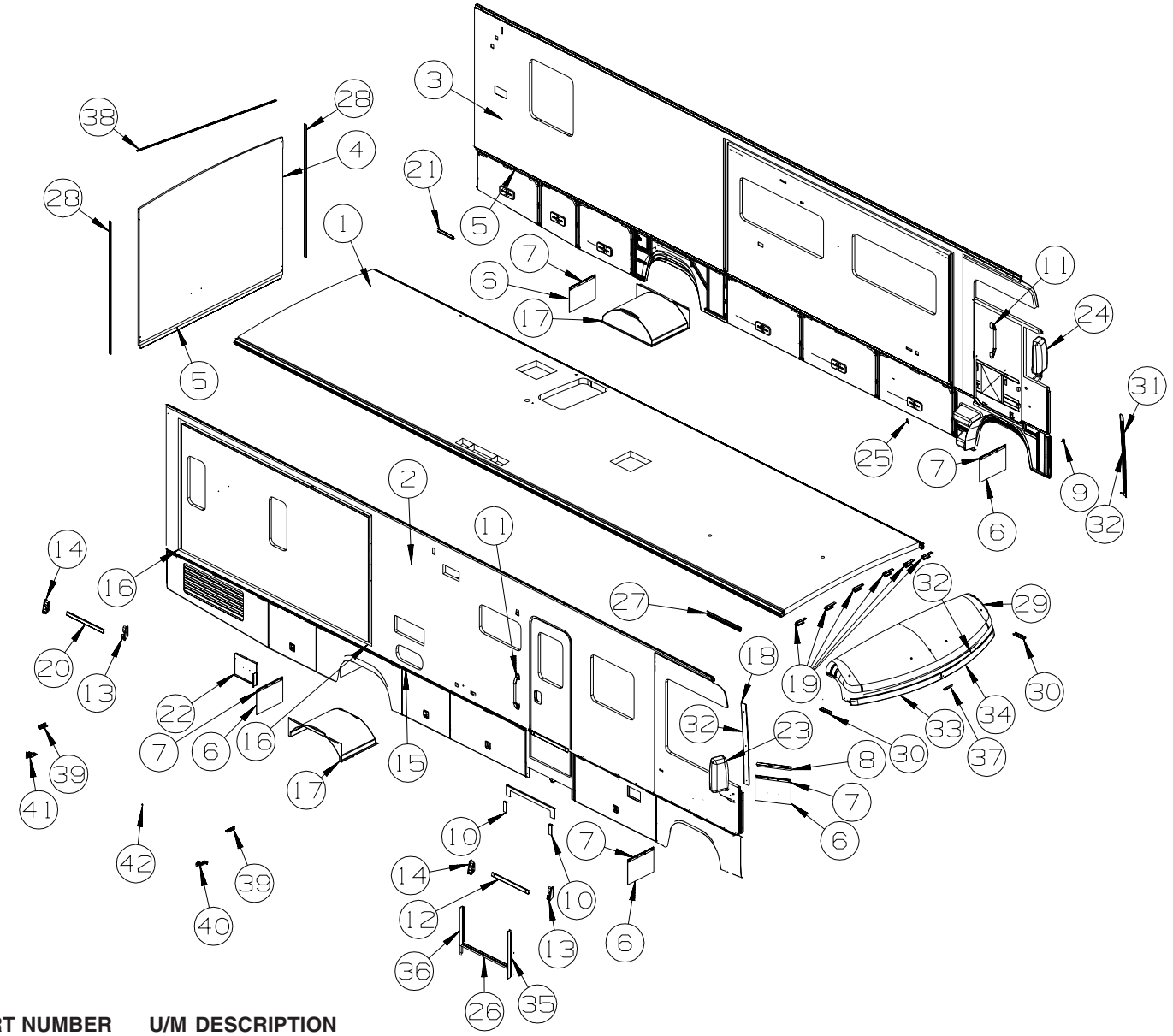

KEY	PART NUMBER	U/M	DESCRIPTION
1	154960-01-T77	EA	ROOF - W/O LIGHTS/VENTS - W/WIRING
2	154959-01-T77	EA	SIDEWALL - PASSENGER - W/O WINDOWS/TRIMS (T89, T90, T91, T92)
2	154959-01-T81	EA	SIDEWALL - PASSENGER - W/O WINDOWS/TRIMS (T93, T94, T95, T96)
2	154959-01-T85	EA	SIDEWALL - PASSENGER - W/O WINDOWS/TRIMS (T97, T98, T99, T00)
3	154958-01-T77	EA	SIDEWALL - DRIVER - W/O WINDOWS/TRIMS (T89, T90, T91, T92)
3	154958-01-T81	EA	SIDEWALL - DRIVER - W/O WINDOWS/TRIMS (T93, T94, T95, T96)
3	154958-01-T85	EA	SIDEWALL - DRIVER - W/O WINDOWS/TRIMS (T97, T98, T99, T00)
4	152720-04-T89	EA	BACKWALL/INNER - W/O REAR CAP (T89, T90, T91, T92)
4	152720-04-T93	EA	BACKWALL/INNER - W/O REAR CAP (T93, T94, T95, T96)
4	152720-04-T97	EA	BACKWALL/INNER - W/O REAR CAP (T97, T98, T99, T00)
5	104692-01-000	FT	SEAL - ADHESIVE BACKED FOAM - 3/4" THICK X 3/4" WIDE X 25'
6	017516-01-000	EA	MUD FLAP - 14"H X 18"W - W/O MOUNTING HOLES - BLACK
7	140922-01-02B	EA	RETAINER - MUD FLAP - 1" X 17.7" - E-COATED/BLACK
8	132695-01-02B	EA	ANGLE - MUDFLAP - E-COATED
9	150742-02-02A	EA	CAP/TRIM - DRIVER DOOR - BLACK
10	121117-09-02B	EA	ANGLE - W/O SLOTS - 9.8" X 3.3" - E-COATED
11	132442-03-01A	EA	HANDLE - ASSIST/ITASCA LOGO - 18" - W/CHROME ENDS
12	149822-01-02A	EA	TRIM - SIDEWALL/ENTRY DOOR - 25.3" - BLACK
13	146576-01-02A	EA	CAP - END/TRIM - RIGHT HAND
14	146576-02-02A	EA	CAP - END/TRIM - LEFT HAND- BLACK
15	153498-01-02A	EA	BUMPER - RUBBER - BLACK
16	093673-01-06A	FT	TRIM/MOLDING - 1.4" WIDE X 8' LONG - BRIGHT WHITE
17	131365-01-000	EA	WHEELWELL - PLASTIC

COPYRIGHT © 2006 WINNEBAGO INDUSTRIES INC.

EXTERIOR BODY GROUP (CONTINUED)

PANELS & TRIMS (CONTINUED)

KEY	PART NUMBER	U/M	DESCRIPTION
18	125384-15-02A	EA	TRIM - WINDSHIELD - A-PILLAR - PASSENGER - BLACK
19	134774-01-02B	EA	BRACKET - CAB ATTACHMENT - E-COATED
20	146550-01-02A	EA	TRIM COVER - SIDEWALL - 182" - BLACK
21	146548-01-01A	EA	TRIM - RETAINER
22	133569-03-02B	EA	PANEL - COVER - LP - E-COATED
23*	142721-01-01A	EA	MIRROR - EXTERIOR REMOTE/HEAT/PASS - (BREAKAWAY) - BLACK
23*	142721-01-02A	EA	MIRROR - EXTERIOR REMOTE/HEAT/PASS - (BREAKAWAY) - CHROME - FULL BODY PAINT
24*	142721-02-01A	EA	MIRROR - EXTERIOR REMOTE/HEAT/DRVR - (BREAKAWAY) - BLACK
24*	142721-02-02A	EA	MIRROR - EXTERIOR REMOTE/HEAT/DRVR - (BREAKAWAY) - CHROME - FULL BODY PAINT
25	150742-01-02A	EA	CAP/TRIM - DRIVER DOOR - BLACK
26	137599-01-01A	EA	TRIM - SIDEWALL/LOWER - 33.2" - BLACK - NOT ILLUSTRATED FROM: 00-00-00 THRU: 10-14-05
26	152800-01-01A	EA	TRIM - SIDEWALL/ENTRY STEP - 33.2" - BLACK FROM: 10-15-05 THRU: 99-99-99
27	131483-01-01A	EA	RAIL - AWNING - 192" - BRIGHT WHITE - NOT ILLUSTRATED FROM: 00-00-00 THRU: 10-02-05
27	157284-01-01A	EA	RAIL - AWNING - 192" - BRIGHT WHITE FROM: 10-03-05 THRU: 99-99-99
28	132273-02-02B	EA	BRACKET - REAR TRIM - E-COATED - NOT ILLUSTRATED FROM: 00-00-00 THRU: 07-17-05
28	156622-01-01A	EA	SEALER - TAPE - 1/4"THICK X 3"WIDE X 100 FT FROM: 07-18-05 THRU: 99-99-99
29	153030-02-T77	EA	CAP - ROOF - W/O LIGHTS/WIRING
30	128072-04-02B	EA	BRACKET/SIDE - ROOF CAP - E-COATED
31	125384-16-02A	EA	TRIM - WINDSHIELD - A-PILLAR - DRIVER - BLACK
32	099418-01-000	FT	SEAL - D-SECTION/ADHESIVE BACK - .44" X .44" - BLK RUBBER
33	153354-02-T77	EA	TRIM - ROOF CAP/SIDEWALL - LOWER/RIGHT
34	153354-04-T77	EA	TRIM - ROOF CAP/SIDEWALL - LOWER/LEFT
35	133100-09-01A	EA	TRIM - SIDEWALL - 30.7" - BLACK
36	133100-10-01A	EA	TRIM - SIDEWALL - 30.7" - BLACK
37	154178-01-02B	EA	MOUNT - TRIM/ROOF CAP/CENTER - E-COATED
37	154178-01-02B	EA	MOUNT - TRIM/ROOF CAP/CENTER - E-COATED
38	114248-02-01A	EA	ANGLE - PLASTIC - .7" X .4" X 96.7" - MODERN IVORY
39	142043-01-01A	EA	TRIM - SEAL, FLOOR - SLIDEOUT - MILL
40	143219-01-01A	EA	SEAL - CORNER - F/REAR SLIDEOUT
41	143219-02-01A	EA	SEAL - CORNER - F/REAR SLIDEOUT
42	143905-01-000	FT	SEAL - LOWER - F/SLIDEOUT

***COMPONENT PARTS LISTED LATER IN THIS GROUP**

COPYRIGHT © 2006 WINNEBAGO INDUSTRIES INC.

EXTERIOR BODY GROUP (CONTINUED)

PANELS & TRIMS (CONTINUED)

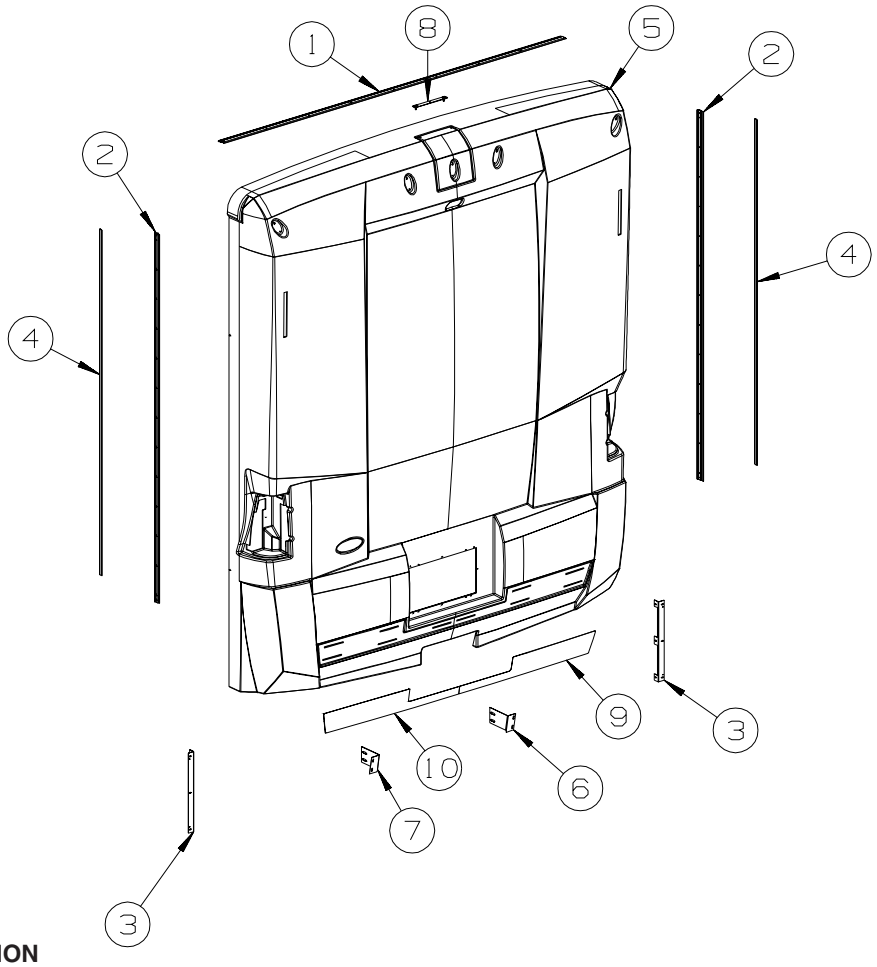

KEY	PART NUMBER	U/M	DESCRIPTION
1	083805-23-000	EA	TRIM - ROOF CAP - 92.1" - BRIGHT WHITE
2	092041-01-03A	EA	TRIM - FRONT/REAR CAP (SIDEWALL) - 83.1" - BRIGHT WHITE
3	138789-01-02B	EA	ANGLE/MOUNT - WHEEL LIP/BACKWALL - E-COATED
4	091985-01-07A	FT	INSERT - TRIM - REAR CAP TO SIDEWALL - .66" - BRIGHT WHITE
5	153205-08-T89	EA	PANEL - REAR CAP - W/O CAMERA MOUNT - BRIGHT WHITE
5	153205-07-T89	EA	PANEL - REAR CAP - W/CAMERA MOUNT - REAR MONITOR SYSTEM
6	153465-01-02B	EA	BRACE - REAR CAP - RH
7	153465-02-02B	EA	BRACE - REAR CAP - LH
8	151438-02-02B	EA	PLATE/MOUNTING - F/CAMERA ACCESS - E-COATED
9	153429-01-01A	EA	TRIM/ACCENT - REAR CAP/RH HAND - STAINLESS STEEL
10	153429-02-01A	EA	TRIM/ACCENT - REAR CAP/LH HAND - STAINLESS STEEL

COPYRIGHT © 2006 WINNEBAGO INDUSTRIES INC.

EXTERIOR BODY GROUP (CONTINUED)

COMPONENT PARTS FOR PANELS & TRIMS

142721-01-01A, 142721-02-01A

KEY	PART NUMBER	U/M	DESCRIPTION	VENDOR NO.
	106015-16-700	EA	GLASS/FLAT-W/HEAT ELEMENT	709450
	106015-18-700	EA	GLASS/CONVEX	709650
	106015-18-702	EA	MOTOR - FLAT GLASS	7471180
	106015-18-703	EA	GLASS/CONVEX-ACT/HOUSING	709651
	131431-03-700	EA	LIGHT/TURN SIGNAL - AMBER	7475510
	142721-01-700	EA	COVER/CAP - BOTTOM	Q709678
	142721-01-701	EA	CAP - RECTANGULAR (VELVAC)	709557
	142721-01-702	EA	BRACKET/MOUNT - MIRROR	7096800
	142721-01-703	EA	GASKET/MOUNT - MIRROR	7094700
	142721-01-704	EA	SET SCREW - 5/16"-18 X 1.25"	4082140

142721-01-02A, 142721-02-02A

KEY	PART NUMBER	U/M	DESCRIPTION	VENDOR NO.
	106015-16-700	EA	GLASS/FLAT-W/HEAT ELEMENT	709450
	106015-18-700	EA	GLASS/CONVEX	709650
	106015-18-701	EA	ACTUATOR - CONVEX GLASS	7475410
	106015-18-702	EA	MOTOR - FLAT GLASS	7471180
	106015-18-703	EA	GLASS/CONVEX-ACT/HOUSING	709651 KIT
	131431-03-700	EA	LIGHT/TURN SIGNAL - AMBER	7475510
	142721-01-700	EA	COVER/CAP - BOTTOM	Q709678
	142721-01-701	EA	CAP - RECTANGULAR (VELVAC)	709557
	142721-01-702	EA	BRACKET/MOUNT - MIRROR	7096800
	142721-01-703	EA	GASKET/MOUNT - MIRROR	7097400
	142721-01-704	EA	SET SCREW - 5/16"-18 X 1.25"	4082140

COPYRIGHT © 2006 WINNEBAGO INDUSTRIES INC.

EXTERIOR BODY GROUP (CONTINUED)

FRONT END

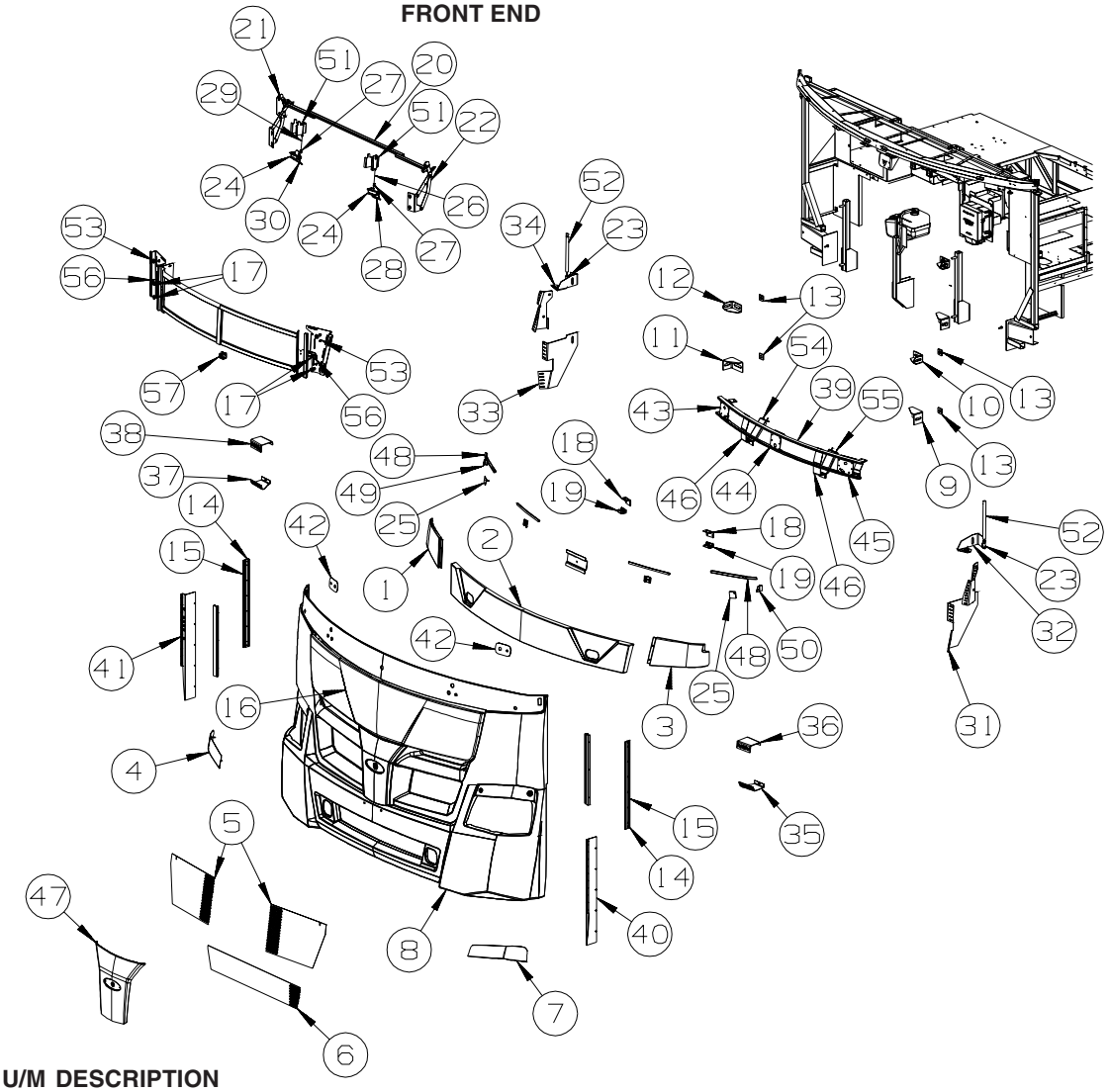

KEY	PART NUMBER	U/M	DESCRIPTION
1	154524-03-T89	EA	COWL - WINDSHIELD - PASSENGER
	076813-02-000	FT	SEAL-D BULB - .5" X .7" - MEDIUM SPONGE RUBBER - BLACK
2	154507-02-T89	EA	COWL - WINDSHIELD - CENTER
3	154524-04-T89	EA	COWL - WINDSHIELD - DRIVER
	076813-02-000	FT	SEAL-D BULB - .5" X .7" - MEDIUM SPONGE RUBBER - BLACK
4	154142-01-01A	EA	TRIM - PANEL/FRONT END - PASSENGER - CHROME PLATED
5	148172-03-02A	EA	GRILLE - FRONT/UPPER - BRIGHT DIPPED
6	148172-04-02A	EA	GRILLE - FRONT/LOWER - BRIGHT DIPPED
7	154142-02-01A	EA	TRIM - PANEL/FRONT END - DRIVER - CHROME PLATED
8	153880-02-T89	EA	PANEL - FRONT/LOWER - W/O HOOD/GRILLE/LIGHTS
9	128455-01-02B	EA	BRACKET - BUMPER - E-COATED
10	128455-10-02B	EA	BRACKET - BUMPER - E-COATED
11	128455-02-02B	EA	BRACKET - BUMPER - E-COATED
12	128455-09-02B	EA	BRACKET - BUMPER - E-COATED
13	116617-02-02B	EA	SPACER - BUMPER
14	092041-16-01A	EA	TRIM - FRONT/REAR CAP (SIDEWALL) - 24.8" - BRIGHT WHITE
15	091985-01-01A	EA	INSERT - TRIM - REAR CAP TO SIDEWALL - .66" - OFF WHITE
16	154347-01-T89	EA	HOOD - FRONT - W/O HARDWARE
17	058786-01-000	EA	BOLT - HOOD ADJUSTMENT - 5/16"-18 X 1.5"-2"- W/BLACK PA
18	144209-02-02B	EA	ANGLE/STRIKER - HOOD - E-COATED
19	130053-01-01A	EA	STRIKER - LUGGAGE DOOR - FLUSH - BLACK
20	154207-02-02B	EA	TUBE/TIMING - HOOD - E-COATED
21	137072-11-01A	EA	HINGE - HOOD - PASSENGER - BLACK
22	137072-12-01A	EA	HINGE - HOOD - DRIVER - BLACK
23	126263-02-02B	EA	BRACKET - GAS SPRING W/BALL STUD - E-COATED
24	139160-01-01A	EA	BRACKET - LATCH - PADDLE
25	144063-02-02B	EA	BRACKET - WINDSHIELD COWL - E-COATED

FROM: 00-00-00 THRU: 10-02-05

COPYRIGHT © 2006 WINNEBAGO INDUSTRIES INC.

EXTERIOR BODY GROUP (CONTINUED)

FRONT END (CONTINUED)

KEY	PART NUMBER	U/M	DESCRIPTION
	153783-04-02B	EA	BRACKET - WINDSHIELD COWL - E-COATED
			FROM: 10-03-05 THRU: 99-99-99
26	145521-08-01A	EA	ROD - HOOD LATCH
27	102265-01-01A	EA	CLIP/ROD END - 5/32" - BLACK PLASTIC
28	147388-01-01A	EA	LATCH/PADDLE - E-COAT
29	145521-07-01A	EA	ROD - HOOD LATCH
30	147388-02-02B	EA	LATCH/PADDLE - E-COAT
31	154460-02-02B	EA	SUPPORT - FRONT END - LOWER/LEFT HAND - E-COATED
32	154459-02-02B	EA	SUPPORT - FRONT END - UPPER/LEFT HAND - E-COATED
33	154460-01-02B	EA	SUPPORT - FRONT END - LOWER/RIGHT HAND - E-COATED
34	154459-01-02B	EA	SUPPORT - FRONT END - UPPER/RIGHT HAND - E-COATED
35	154414-01-02B	EA	SUPPORT - FOGLAMP - LOWER/RIGHT HAND - E-COATED
36	154413-01-02B	EA	SUPPORT - FOGLAMP - UPPER/RIGHT HAND - E-COATE
37	154414-02-02B	EA	SUPPORT - FOGLAMP - LOWER/LEFT HAND - E-COATE
38	154413-02-02B	EA	SUPPORT - FOGLAMP - UPPER/LEFT HAND - E-COATED
39	149784-04-T77	EA	SUPPORT - WIPER
40	143561-04-02B	EA	BRACKET - FRONT END - LEFT HAND - E-COATED
41	143561-03-02B	EA	BRACKET - FRONT END - RIGHT HAND - E-COATED
42	145222-01-01A	EA	BOOT/COWL
43	149788-10-02B	EA	SUPPORT - PIVOT SHAFT - E-COATED
44	125847-41-02B	EA	SUPPORT - PIVOT SHAFT - E-COATED
45	149788-12-02B	EA	SUPPORT - PIVOT SHAFT - E-COATED
46	144208-02-02B	EA	BRACKET/STRIKER - HOOD - E-COATED
47	154182-01-01A	EA	TRIM - FRONT END/CENTER - CHROME PLATED
48	076813-02-000	FT	SEAL-D BULB - .5" X .7" - MEDIUM SPONGE RUBBER - BLACK
49	153730-03-02B	EA	ZEE - COWL - OUTSIDE - RH HAND - E-COATED
50	153730-04-02B	EA	ZEE - COWL - OUTSIDE - LH HAND - E-COATED
51	113908-02-000	EA	LATCH/PLUNGER - F/HOOD/REAR TRUNK/ENGINE/GENERATOR DOOR
52	142569-28-000	EA	SPRING/GAS - 74 LB - 18.5" EXTENDED/11" COMPRESSED
53	154526-02-02B	EA	SUPPORT - HINGE/HOOD - RIGHT HAND - E-COATED
			FROM: 00-00-00 THRU: 03-05-06
53	154526-06-02B	EA	SUPPORT - HINGE/HOOD - RIGHT HAND - E-COATED
			FROM: 03-06-06 THRU: 99-99-99
53	154526-04-02B	EA	SUPPORT - HINGE/HOOD - LEFT HAND - E-COATED
			FROM: 00-00-00 THRU: 03-05-06
53	154526-08-02B	EA	SUPPORT - HINGE/HOOD - LEFT HAND - E-COATED
			FROM: 03-06-06 THRU: 99-99-99
53	058786-04-000	EA	BOLT - HOOD ADJUSTMENT - 5/16"-18 X 2"-2.5" - W/BLACK PAD
54	156216-01-02B	EA	BRACKET/SUPPORT - STRIKER/RH - E-COATED
55	156216-02-02B	EA	BRACKET/SUPPORT - STRIKER/LH - E-COATED
56	156200-01-02B	EA	ADJUSTER - HOOD - E-COATED
57	156245-02-02B	EA	BRACKET - HOOD/BUMPER - CENTER - E-COATED

LADDER

KEY	PART NUMBER	U/M	DESCRIPTION
	129375-02-000	EA	SEAL - LADDER BRACKET
	150785-05-01A	EA	LADDER - LOWER - 35.6"/3 STEP - HINGED STANDOFF
	141624-02-01A	EA	LADDER - REAR CAP - BRUSHED ALUMINUM

COPYRIGHT © 2006 WINNEBAGO INDUSTRIES INC.

EXTERIOR BODY GROUP (CONTINUED)

STRUCTURAL COMPONENTS

KEY	PART NUMBER	U/M	DESCRIPTION
	002766-01-001	EA	ANGLE - EXTRUDED - 1" X 1 1/2" X 17'
	089297-01-000	SF	PLYWOOD - LUAN - OVERLAY GRADE - 4' X 8'
	089297-03-000	SF	PLYWOOD - LUAN - OVERLAY GRADE - 4' X 8.3'
	100619-01-000	BF	FOAM - EXPANDED POLYSTYRENE - 1.34" X 48" X 96"
	100619-02-000	BF	FOAM - EXPANDED POLYSTYRENE - 1.5" X 48" X 96"
	100619-04-000	BF	FOAM - EXPANDED POLYSTYRENE - .5" X 48" X 96"
	100619-05-000	BF	FOAM - EXPANDED POLYSTYRENE - .75" X 48" X 96"-1.5"DENSITY
	100619-13-000	BF	FOAM - EXPANDED POLYSTYRENE-.34" X 34.7" X 96"-2" DENSITY
	100619-16-000	BF	FOAM - EXPANDED POLYSTYRENE - .75" X 48" X 96"-2" DENSITY
	100619-22-000	BF	FOAM - EXPANDED POLYSTYRENE - 1.34" X 48" X 120"
	108535-05-03A	SF	FIBERGLASS SHEET - 108" X 500' ROLL - BRIGHT WHITE
	116942-03-01A	LB	ALUMINUM - .7" X 40" X 158"
	120107-07-000	EA	FOAM - ROOF COVE
	128782-07-01A	EA	FIBERGLASS SHEET - 78.9" X 456" - HIGH GLOSS - BRT WHITE
	128782-17-01A	EA	FIBERGLASS SHEET - 30.9" X 74.7" - HIGH GLOSS - BRT WHITE
	128782-18-01A	EA	FIBERGLASS SHEET - 85.5" X 448.1" - HIGH GLOSS - BRT WHITE
	128782-21-01A	EA	FIBERGLASS SHEET - 31.1" X 75.2" - HIGH GLOSS - BRT WHITE
	148884-20-01A	EA	FIBERGLASS SHEET - 4" X 93.8" - HIGH GLOSS - BRIGHT WHITE
	151523-01-01A	EA	CEILING PANEL - 48" X 97.1" - LAMINATED VINYL/FOAM/LUAN
	152490-01-000	EA	FOAM - PLUG - ROOF TUBE

AWNINGS

SUNCRUISER PATIO AWNINGS GRAPHICS

GRAPHICS

FEATURE COLOR	MODEL	COLOR DESIGNATION	AWNING FABRIC	AWNING LENGTH	WEATHER WRAP(MANUAL)	PART # MANUAL	WEATHER WRAP(ELEC)	PART # ELECTRIC
27G	G33V	FAWN (EA)	VINYL	18'	MTL/BRT WHT	113874-07-29A	MTL/BRT WHT	143181-07-29A
TITANIUM &	G35A	FAWN (EA)	VINYL	20'	NA	NA	MTL/BRT WHT	143181-12-29A
BRONZE	G35U	FAWN (EA)	VINYL	16'	MTL/BRT WHT	113874-06-29A	MTL/BRT WHT	143181-06-29A
	G37B	FAWN (EA)	VINYL	19'	MTL/BRT WHT	113874-08-29A	MTL/BRT WHT	143181-08-29A
	G38G	FAWN (EA)	VINYL	19'	MTL/BRT WHT	113874-08-29A	MTL/BRT WHT	143181-08-29A
	G38J	FAWN (EA)	VINYL	19'	NA	NA	MTL/BRT WHT	143181-13-29A
	G38R	FAWN (EA)	VINYL	19'	MTL/BRT WHT	113874-08-29A	MTL/BRT WHT	143181-08-29A
UP TO 12-11-05	G38T	FAWN (EA)	VINYL	13'	MTL/BRT WHT	113874-04-29A	MTL/BRT WHT	143181-04-29A
12-12-05 ON	G38T	FAWN (EA)	VINYL	13'	MTL/BRT WHT	153692-07-29A	MTL/BRT WHT	143181-04-29A
92K	G33V	GULF BLUE (DX)	VINYL	18'	MTL/BRT WHT	113874-07-39A	MTL/BRT WHT	143181-07-39A
GRANITE &	G35A	GULF BLUE (DX)	VINYL	20'	NA	NA	MTL/BRT WHT	143181-12-39A
SILVER	G35U	GULF BLUE (DX)	VINYL	16'	MTL/BRT WHT	113874-06-39A	MTL/BRT WHT	143181-06-39A
	G37B	GULF BLUE (DX)	VINYL	19'	MTL/BRT WHT	113874-08-39A	MTL/BRT WHT	143181-08-39A
	G38G	GULF BLUE (DX)	VINYL	19'	MTL/BRT WHT	113874-08-39A	MTL/BRT WHT	143181-08-39A
	G38J	GULF BLUE (DX)	VINYL	19'	NA	NA	MTL/BRT WHT	143181-13-39A
	G38R	GULF BLUE (DX)	VINYL	19'	MTL/BRT WHT	113874-08-39A	MTL/BRT WHT	143181-08-39A
UP TO 12-11-05	G38T	GULF BLUE (DX)	VINYL	13'	MTL/BRT WHT	113874-04-39A	MTL/BRT WHT	143181-04-39A
12-12-05 ON	G38T	GULF BLUE (DX)	VINYL	13'	MTL/BRT WHT	153692-07-39A	MTL/BRT WHT	143181-04-39A

FULL BODY PAINT FROM 00-00-00 THRU 06-19-05

SUNCRUISER PATIO AWNINGS FROM 00-00-00 THRU 06-19-05

MODEL	COLOR CODE	AWNING COLOR	HARDWARE COLOR	PATIO ROLLER	AWNING LENGTH	PATIO HARDWARE	SPACER KIT	PATIO ELECTRICAL KIT
G33V	**27A DEEP FOREST**	ALPINE	CHAMPAGNE	143181-07-61E	18'	143181-01-02A	NA	143181-02-01A
G35A		ALPINE	CHAMPAGNE	143181-12-61E	20'	143181-10-02A	143181-11-02A	143181-02-01A
G35U		ALPINE	CHAMPAGNE	143181-06-61E	16'	143181-01-02A	NA	143181-02-01A
G37B		ALPINE	CHAMPAGNE	143181-08-61E	19'	143181-01-02A	NA	143181-02-01A
G38G		ALPINE	CHAMPAGNE	143181-08-61E	19'	143181-01-02A	NA	143181-02-01A
G38J		ALPINE	CHAMPAGNE	143181-13-61E	19'	143181-10-02A	143181-11-02A	143181-02-01A
G38R		ALPINE	CHAMPAGNE	143181-08-61E	19'	143181-01-02A	NA	143181-02-01A
G38T		ALPINE	CHAMPAGNE	143181-04-61E	13'	143181-01-02A	NA	143181-02-01A
G33V	**92A VERMILLION**	TERRA COTTA	CHAMPAGNE	143181-07-60E	18'	143181-01-02A	NA	143181-02-01A
G35A		TERRA COTTA	CHAMPAGNE	143181-12-60E	20'	143181-10-02A	143181-11-02A	143181-02-01A
G35U		TERRA COTTA	CHAMPAGNE	143181-06-60E	16'	143181-01-02A	NA	143181-02-01A
G37B		TERRA COTTA	CHAMPAGNE	143181-08-60E	19'	143181-01-02A	NA	143181-02-01A
G38G		TERRA COTTA	CHAMPAGNE	143181-08-60E	19'	143181-01-02A	NA	143181-02-01A
G38J		TERRA COTTA	CHAMPAGNE	143181-13-60E	19'	143181-10-02A	143181-11-02A	143181-02-01A
G38R		TERRA COTTA	CHAMPAGNE	143181-08-60E	19'	143181-01-02A	NA	143181-02-01A
G38T		TERRA COTTA	CHAMPAGNE	143181-04-60E	13'	143181-01-02A	NA	143181-02-01A

COPYRIGHT © 2006 WINNEBAGO INDUSTRIES INC.

EXTERIOR BODY GROUP (CONTINUED)

AWNINGS (CONTINUED)

FULL BODY PAINT FROM 06-20-05 THRU 09-18-05

SUNCRUISER PATIO AWNINGS FROM 06-20-05 THRU 09-18-05

MODEL	COLOR CODE	AWNING COLOR	HARDWARE COLOR	PATIO ROLLER	AWNING LENGTH	PATIO HARDWARE	SPACER KIT	PATIO ELECTRICAL KIT
G33V	**27A DEEP FOREST**	ALPINE	CHAMPAGNE	143181-07-61E	18'	143181-14-02A	NA	143181-16-01A
G35A		ALPINE	CHAMPAGNE	143181-12-61E	20'	143181-15-02A	143181-11-02A	143181-16-01A
G35U		ALPINE	CHAMPAGNE	143181-06-61E	16'	143181-14-02A	NA	143181-16-01A
G37B		ALPINE	CHAMPAGNE	143181-08-61E	19'	143181-14-02A	NA	143181-16-01A
G38G		ALPINE	CHAMPAGNE	143181-08-61E	19'	143181-14-02A	NA	143181-16-01A
G38J		ALPINE	CHAMPAGNE	143181-13-61E	19'	143181-15-02A	143181-11-02A	143181-16-01A
G38R		ALPINE	CHAMPAGNE	143181-08-61E	19'	143181-14-02A	NA	143181-16-01A
G38T		ALPINE	CHAMPAGNE	143181-04-61E	13'	143181-14-02A	NA	143181-16-01A
G33V	**92A VERMILLION**	TERRA COTTA	CHAMPAGNE	143181-07-60E	18'	143181-14-02A	NA	143181-16-01A
G35A		TERRA COTTA	CHAMPAGNE	143181-12-60E	20'	143181-15-02A	143181-11-02A	143181-16-01A
G35U		TERRA COTTA	CHAMPAGNE	143181-06-60E	16'	143181-14-02A	NA	143181-16-01A
G37B		TERRA COTTA	CHAMPAGNE	143181-08-60E	19'	143181-14-02A	NA	143181-16-01A
G38G		TERRA COTTA	CHAMPAGNE	143181-08-60E	19'	143181-14-02A	NA	143181-16-01A
G38J		TERRA COTTA	CHAMPAGNE	143181-13-60E	19'	143181-15-02A	143181-11-02A	143181-16-01A
G38R		TERRA COTTA	CHAMPAGNE	143181-08-60E	19'	143181-14-02A	NA	143181-16-01A
G38T		TERRA COTTA	CHAMPAGNE	143181-04-60E	13'	143181-14-02A	NA	143181-16-01A

FULL BODY PAINT FROM 09-19-05 THRU 99-99-99

SUNCRUISER PATIO AWNINGS FROM 09-19-05 THRU 99-99-99

MODEL	COLOR CODE	AWNING COLOR	HARDWARE COLOR	PATIO ROLLER	AWNING LENGTH	PATIO HARDWARE	SPACER KIT	PATIO ELECTRICAL KIT
G33V	**27A DEEP FOREST**	ALPINE	CHAMPAGNE	143181-07-61E	18'	143181-01-02A	NA	143181-02-01A
G35A		ALPINE	CHAMPAGNE	143181-12-61E	20'	143181-10-02A	143181-11-02A	143181-02-01A
G35U		ALPINE	CHAMPAGNE	143181-06-61E	16'	143181-01-02A	NA	143181-02-01A
G37B		ALPINE	CHAMPAGNE	143181-08-61E	19'	143181-01-02A	NA	143181-02-01A
G38G		ALPINE	CHAMPAGNE	143181-08-61E	19'	143181-01-02A	NA	143181-02-01A
G38J		ALPINE	CHAMPAGNE	143181-13-61E	19'	143181-10-02A	143181-11-02A	143181-02-01A
G38R		ALPINE	CHAMPAGNE	143181-08-61E	19'	143181-01-02A	NA	143181-02-01A
G38T		ALPINE	CHAMPAGNE	143181-04-61E	13'	143181-01-02A	NA	143181-02-01A
G33V	**92A VERMILLION**	TERRA COTTA	CHAMPAGNE	143181-07-60E	18'	143181-01-02A	NA	143181-02-01A
G35A		TERRA COTTA	CHAMPAGNE	143181-12-60E	20'	143181-10-02A	143181-11-02A	143181-02-01A
G35U		TERRA COTTA	CHAMPAGNE	143181-06-60E	16'	143181-01-02A	NA	143181-02-01A
G37B		TERRA COTTA	CHAMPAGNE	143181-08-60E	19'	143181-01-02A	NA	143181-02-01A
G38G		TERRA COTTA	CHAMPAGNE	143181-08-60E	19'	143181-01-02A	NA	143181-02-01A
G38J		TERRA COTTA	CHAMPAGNE	143181-13-60E	19'	143181-10-02A	143181-11-02A	143181-02-01A
G38R		TERRA COTTA	CHAMPAGNE	143181-08-60E	19'	143181-01-02A	NA	143181-02-01A
G38T		TERRA COTTA	CHAMPAGNE	143181-04-60E	13'	143181-01-02A	NA	143181-02-01A

COPYRIGHT © 2006 WINNEBAGO INDUSTRIES INC.

EXTERIOR BODY GROUP (CONTINUED)

AWNINGS (CONTINUED)

KEY	PART NUMBER	U/M	DESCRIPTION
	113874-11-01A	EA	SCREW/LAG - AWNING - 1/4" X 1" STAINLESS STEEL
	113874-12-01A	EA	SCREW/LAG - AWNING - 1/4" X 2 3/4" STAINLESS STEEL
*	113874-01-02A	EA	HARDWARE KIT - AWNING - W/O STANDOFF BRACKET-BRIGHT WHITE - MANUAL
*	113874-01-02A	EA	HARDWARE KIT - AWNING - W/O STANDOFF BRACKET-BRIGHT WHITE - MANUAL G38T FROM: 00-00-00 THRU: 12-11-05
	153692-06-01A	EA	HARDWARE KIT - F/2 STEP (BASEMENT STYLE) - BRIGHT WHITE - MANUAL G38T FROM: 12-12-05 THRU: 99-99-99
	137054-01-02A	EA	BRACKET - AWNING - BRIGHT WHITE - MANUAL
	143181-01-01A	EA	HARDWARE/AWNING - WEATHERPROOF - BRIGHT WHITE- ELECTRIC FROM: 00-00-00 THRU: 06-19-05
	143181-14-01A	EA	HARDWARE/AWNING - WEATHERPROOF - BRIGHT WHITE- ELECTRIC FROM: 06-20-05 THRU: 09-18-05
	143181-01-01A	EA	HARDWARE/AWNING - WEATHERPROOF - BRIGHT WHITE- ELECTRIC FROM: 09-19-05 THRU: 99-99-99
	143181-02-01A	EA	ELECTRICAL KIT/AWNING - WEATHERPROOF - ELECTRIC FROM: 00-00-00 THRU: 06-19-05
	143181-16-01A	EA	ELECTRICAL KIT/AWNING - CONTROL BOX - WEATHERPRO - ELECTRIC FROM: 06-20-05 THRU: 09-18-05
	143181-02-01A	EA	ELECTRICAL KIT/AWNING - WEATHERPROOF - ELECTRIC FROM: 09-19-05 THRU: 99-99-99
	143181-17-01A	EA	WIND SENSOR/AWING - WEATHERPRO - ARM MOUNT/SILVER - ELECTRIC FROM: 06-20-05 THRU: 09-18-05
	143181-10-01A	EA	AWNING/WEATHERPROOF - HARDWARE KIT - BRIGHT WHITE - ELECTRIC FROM: 00-00-00 THRU: 06-19-05
	143181-15-01A	EA	HARDWARE/AWNING - WEATHERPRO - BRIGHT WHITE- ELECTRIC FROM: 06-20-05 THRU: 09-18-05
	143181-10-01A	EA	AWNING/WEATHERPROOF - HARDWARE KIT - BRIGHT WHITE - ELECTRIC FROM: 09-19-05 THRU: 99-99-99
	143181-10-02A	EA	AWNING/WEATHERPROOF - HARDWARE KIT - CHAMPAGNE - ELECTRIC/FULL BODY PAINT FROM: 00-00-00 THRU: 06-19-05
	143181-15-02A	EA	HARDWARE/AWNING - WEATHERPRO - CHAMPAGNE - ELECTRIC/FULL BODY PAINT FROM: 06-20-05 THRU: 09-18-05
	143181-10-02A	EA	AWNING/WEATHERPROOF - HARDWARE KIT - CHAMPAGNE - ELECTRIC/FULL BODY PAINT FROM: 09-19-05 THRU: 99-99-99
	143181-11-01A	EA	AWNING/WTHRPRF - SPACER KIT - BRIGHT WHITE - ELECTRIC, G35A, G38J, G38G
	143181-11-02A	EA	AWNING/WTHRPRF - SPACER KIT - CHAMPAGNE - ELECTRIC/FULL BODY PAINT, G35A, G38J, G38G
	146457-02-03A	EA	BRACKET - AWNING - BRIGHT WHITE - ELECTRIC, G35A, G38J, G38G
	146457-02-02A	EA	BRACKET - AWNING - BLACK - ELECTRIC, G35A, G38J, G38G/FULL BODY PAINT
	154099-01-01A	EA	SUNSCREEN/RMVBL/BL-18'X72"-F/19'-20' -W/HDW - PATIO AWNING SUNSCREEN
	154099-02-01A	EA	SUNSCREEN/RMVBL/BL-16'X72"-F/18' -W/HDW - PATIO AWNING SUNSCREEN, G33V ONLY
	154099-03-01A	EA	SUNSCREEN/RMVBL/BL-14'X72"-F/16' -W/HDW - PATIO AWNING SUNSCREEN, G35U ONLY
	154099-04-01A	EA	SUNSCREEN/RMVBL/BL-12'X72" - F/ELEC AWNING-W/HDW- PATIO AWNING SUNSCREEN, G38T ONLY

***COMPONENT PARTS LISTED LATER IN THIS GROUP**

COPYRIGHT © 2006 WINNEBAGO INDUSTRIES INC.

EXTERIOR BODY GROUP (CONTINUED)

COMPONENT PARTS FOR AWNINGS

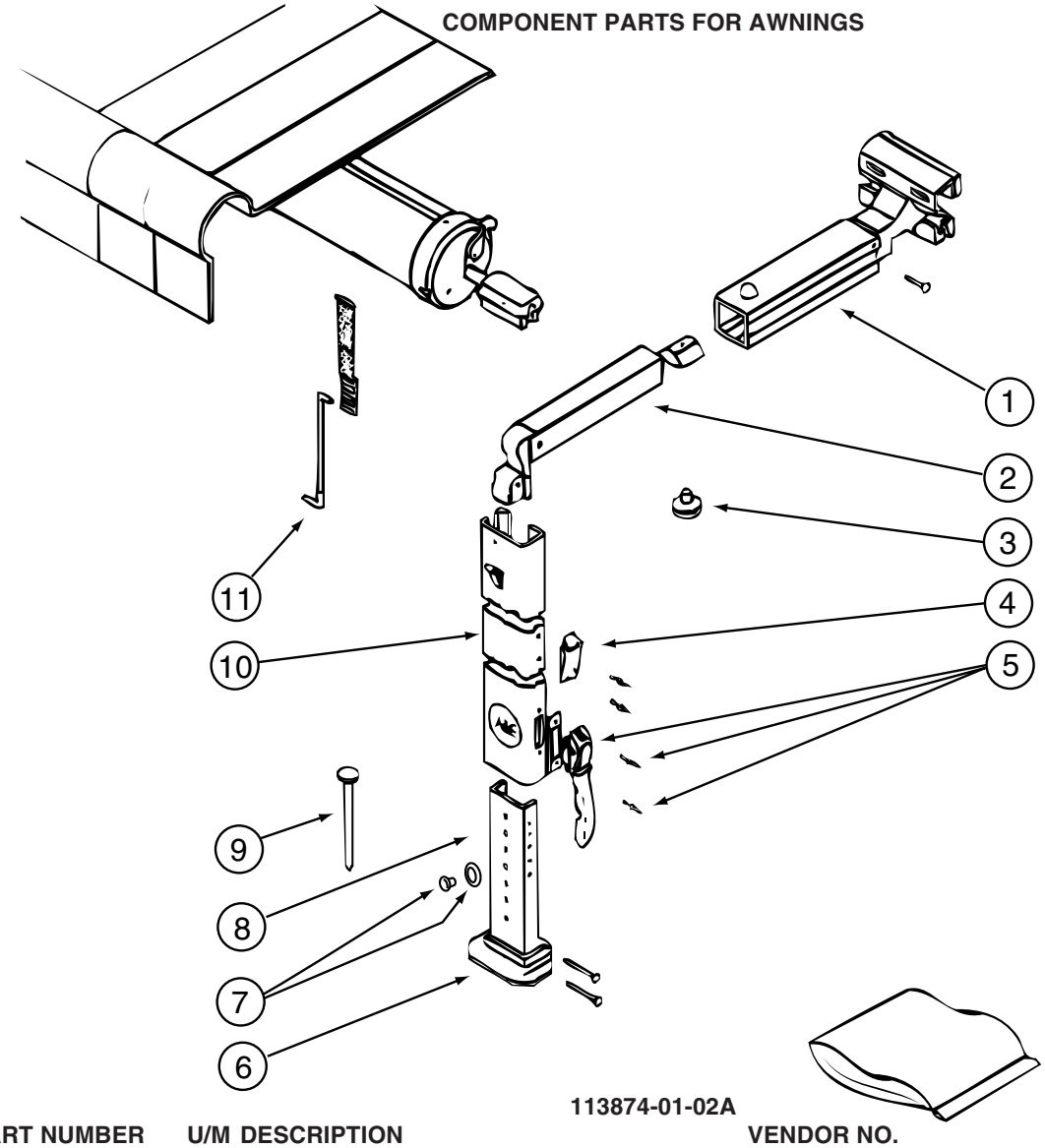

113874-01-02A

KEY	PART NUMBER	U/M	DESCRIPTION	VENDOR NO.
1	113874-01-714	EA	RAFTER - MAIN RH/LH BRT/WHT	830295.536F
2	113874-01-715	EA	RAFTER - SECONDARY BRT/WHT	830463.511F
3	113874-01-702	EA	KNOB - ADJUSTING	3105421.014
4	113874-01-706	EA	LOCK - TRAVEL	830587.001
5	113874-01-707	EA	HANDLE - LIFT W/RIVETS	830644
6	113874-01-712	EA	FOOT - PATIO	730366-001
7	113874-01-710	EA	PLUG-STOP KIT	830456
8	113874-01-717	EA	ARM - ADJUSTABLE BRT/WHT	830467.517/F
9	113874-01-709	EA	NAIL-SPIKE, 8"	113006
10	113874-01-716	EA	ARM - MAIN SUPPORT BRT/WHT	3104502.293/F
11	113874-01-703	EA	ROD-CENTER PULL W/ACCESSORY	830152.102

COPYRIGHT © 2006 WINNEBAGO INDUSTRIES INC.

EXTERIOR DOORS & COMPARTMENTS GROUP

DOOR & COMPARTMENT LAYOUT

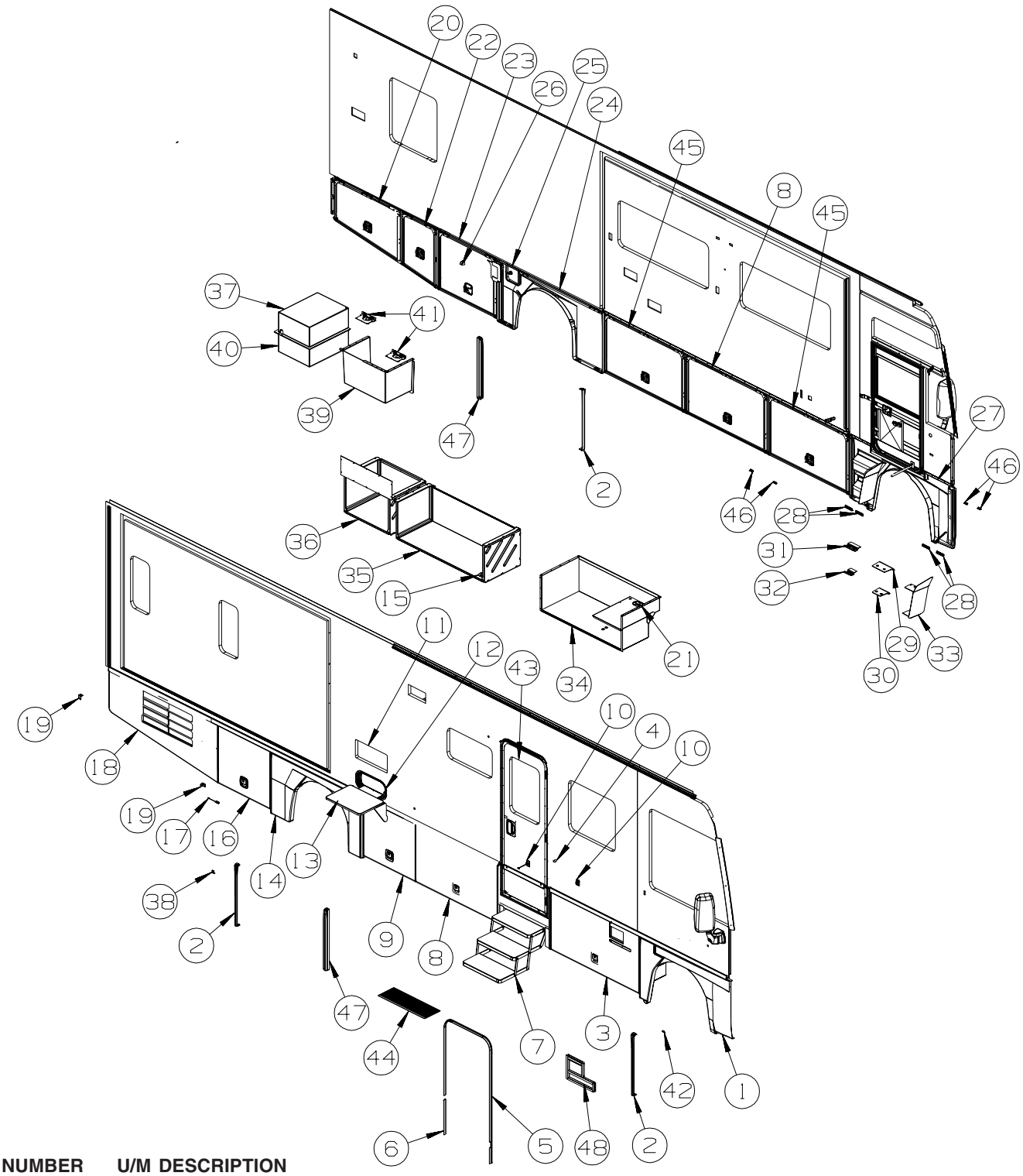

KEY	PART NUMBER	U/M	DESCRIPTION
1	154039-01-T77	EA	PANEL - WHEEL LIP - PASSENGER/FRONT
	139793-03-01A	EA	HINGE - CENTER/VALANCE DOOR - W/O BALL STUD
	107865-28-000	EA	ROD - SUPPORT - VALANCE PANEL - 17.7" FROM: 00-00-00 THRU: 08-07-05
	107865-29-000	EA	ROD - SUPPORT - VALANCE PANEL - 24.7" FROM: 00-00-00 THRU: 08-07-05
2	154044-02-10A	EA	END CAP - WHEEL LIP - LEFT HAND - BLACK

COPYRIGHT © 2006 WINNEBAGO INDUSTRIES INC.

EXTERIOR DOORS & COMPARTMENTS GROUP (CONTINUED)

DOOR & COMPARTMENT LAYOUT (CONTINUED)

KEY	PART NUMBER	U/M	DESCRIPTION
3	152148-14-T77	EA	VALANCE/DOOR - W/O LATCH/HDW - W/CUT OUT - 55.7" X 30.3"
	132873-D5-000	EA	ROD - LATCH - 21.7" W/3/4" DOG LEG
	132873-D7-000	EA	ROD - LATCH - 23.5" W/3/4" DOG LEG
			FROM: 00-00-00 THRU: 08-21-05
	135624-A8-01B	EA	ROD - LATCH
			FROM: 08-22-05 THRU: 99-99-99
	130053-01-01A	EA	STRIKER - LUGGAGE DOOR - FLUSH - BLACK
	143793-01-01A	EA	SHIM - STRIKER - LUGGAGE - 3/64" - BLACK
	142569-14-000	EA	SPRING/GAS - 100 LB - 20" EXTENDED/12" COMPRESSED
	126263-02-02B	EA	BRACKET - GAS SPRING W/BALL STUD - E-COATED
	132892-08-01A	FT	SEAL - BULB/SINGLE - W/U CHANNEL - BLACK
4	120863-02-000	EA	BUMPER - RUBBER/RADIUS TOP - 1" X 1 1/2"
5	139100-01-01A	EA	GARNISH/RADIUS - ENTRY DOOR - BRIGHT WHITE
5	139100-01-02A	EA	GARNISH/RADIUS - ENTRY DOOR - BLACK - FULL BODY PAINT
6	139101-01-01A	EA	GARNISH/STRAIGHT - W/NOTCH - 36.31" - BRIGHT WHITE
6	139101-01-02A	EA	GARNISH/STRAIGHT - ENTRY DOOR - BLACK - FULL BODY PAINT
7*	143709-01-01A	EA	STEP - ELECTRIC - TRIPLE - BLACK
			FROM: 00-00-00 THRU: 09-14-05
7*	143709-02-01A	EA	STEP - ELECTRIC - TRIPLE - BLACK
			FROM: 09-15-05 THRU: 99-99-99
	116975-01-01A	EA	LATCH - W/O STRIKE - BLACK - NEW STYLE
8	152148-10-T77	EA	VALANCE/DOOR - W/O LATCH/HDW - 51.7" X 30.3"
	132873-D1-000	EA	ROD - LATCH - 19.7" W/3/4" DOG LEG
	132873-D2-000	EA	ROD - LATCH - 21.5" W/3/4" DOG LEG
			FROM: 00-00-00 THRU: 08-21-05
	135624-A5-01B	EA	ROD - LATCH
			FROM: 08-22-05 THRU: 99-99-99
	130053-01-01A	EA	STRIKER - LUGGAGE DOOR - FLUSH - BLACK
	143793-01-01A	EA	SHIM - STRIKER - LUGGAGE - 3/64" - BLACK
	142569-14-000	EA	SPRING/GAS - 100 LB - 20" EXTENDED/12" COMPRESSED
	126263-02-02B	EA	BRACKET - GAS SPRING W/BALL STUD - E-COATED
	132892-08-01A	FT	SEAL - BULB/SINGLE - W/U CHANNEL - BLACK
9	152148-04-T77	EA	VALANCE/DOOR - W/O LATCH/HDW - 32.7" X 30.3"
	132873-25-000	EA	ROD - LATCH - 10.2" W/3/4" DOG LEG
	132873-26-000	EA	ROD - LATCH - 12" W/3/4" DOG LEG
			FROM: 00-00-00 THRU: 08-21-05
	135624-08-01B	EA	ROD - LATCH
			FROM: 08-22-05 THRU: 99-99-99
	130053-01-01A	EA	STRIKER - LUGGAGE DOOR - FLUSH - BLACK
	143793-01-01A	EA	SHIM - STRIKER - LUGGAGE - 3/64" - BLACK
	142569-14-000	EA	SPRING/GAS - 100 LB - 20" EXTENDED/12" COMPRESSED
	126263-02-02B	EA	BRACKET - GAS SPRING W/BALL STUD - E-COATED
	132892-08-01A	FT	SEAL - BULB/SINGLE - W/U CHANNEL - BLACK
10	104099-02-04A	EA	CATCH/RETAINER - DOOR HOLDER - BRIGHT WHITE
10	104099-02-05A	EA	CATCH/RETAINER - DOOR HOLDER - BLACK - FULL BODY PAINT
10	104099-03-04A	EA	CATCH - DOOR HOLDER - STRIKE - 6" - BRIGHT WHITE
10	104099-03-05A	EA	CATCH - DOOR HOLDER - STRIKE - 6" - BLACK - FULL BODY PAINT
11*	084103-08-000	EA	DOOR - VENT - REFRIGERATOR - W/O JAMB - BRIGHT WHITE
	084104-08-000	EA	JAMB - VENT DOOR/REFRIGERATOR - BRIGHT WHITE
12	126945-09-P07	EA	DOOR/STORAGE - W/O HARDWARE - 18.3" X 9.9"
12	126945-09-R38	EA	DOOR/STORAGE - W/O HARDWARE - 18.3" X 9.9" - FULL BODY PAINT
13	142034-02-01A	EA	SHELF - F/EXTERIOR TV - BRIGHT WHITE
14	154040-03-T77	EA	PANEL - WHEEL LIP - PASSENGER/REAR
	139793-03-01A	EA	HINGE - CENTER/VALANCE DOOR - W/O BALL STUD
15*	009426-01-000	EA	HATCH - POWER

COPYRIGHT © 2006 WINNEBAGO INDUSTRIES INC.

EXTERIOR DOORS & COMPARTMENTS GROUP (CONTINUED)

DOOR & COMPARTMENT LAYOUT (CONTINUED)

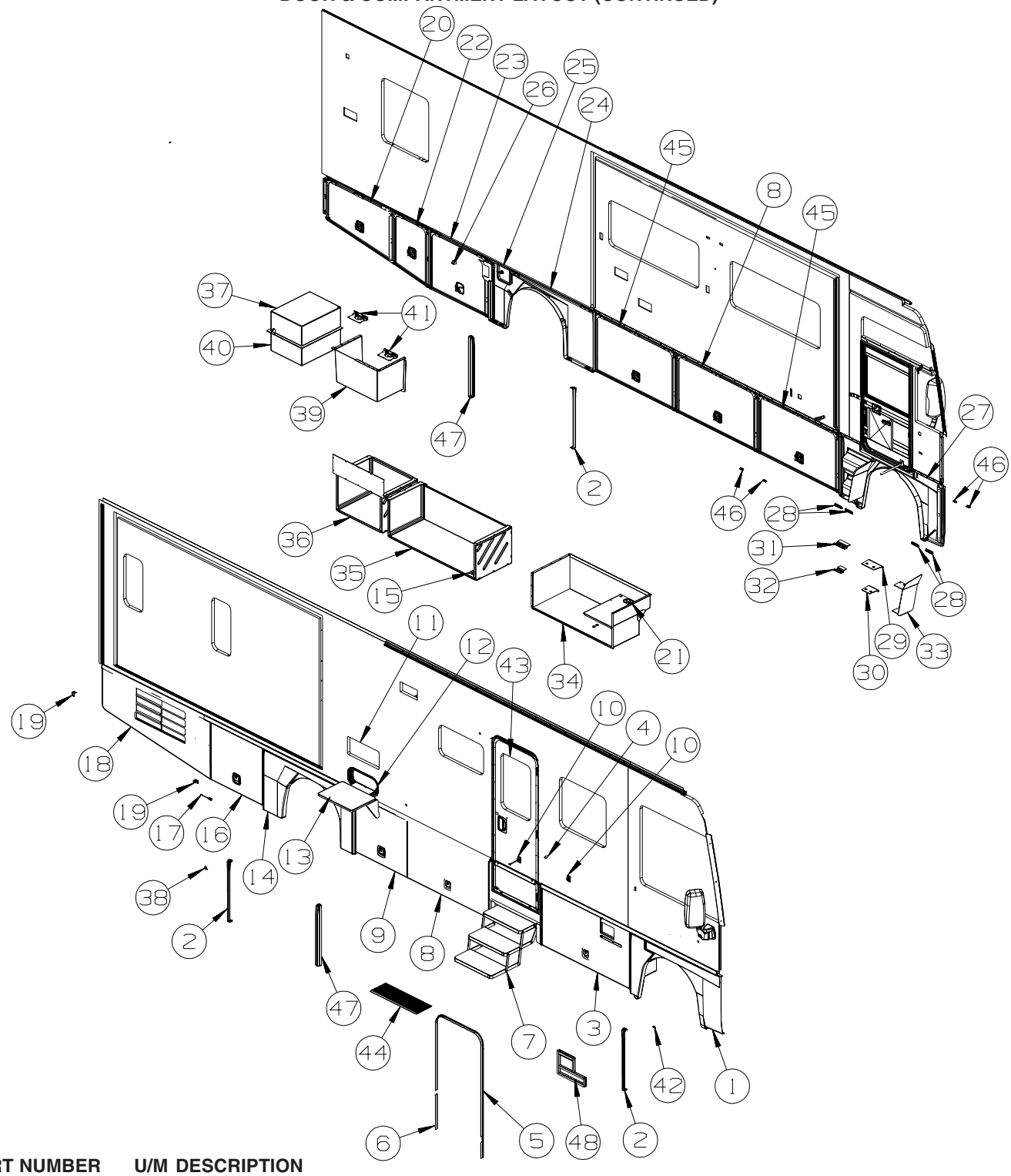

KEY	PART NUMBER	U/M	DESCRIPTION
16	152148-05-T77	EA	VALANCE/DOOR - W/O LATCH/HDW - 32.7" X 30.3"
	132873-25-000	EA	ROD - LATCH - 10.2" W/3/4" DOG LEG
	132873-26-000	EA	ROD - LATCH - 12" W/3/4" DOG LEG
			FROM: 00-00-00 THRU: 08-21-05
	135624-08-01B	EA	ROD - LATCH
			FROM: 08-22-05 THRU: 99-99-99
	130053-01-01A	EA	STRIKER - LUGGAGE DOOR - FLUSH - BLACK
	143793-01-01A	EA	SHIM - STRIKER - LUGGAGE - 3/64" - BLACK
	142569-14-000	EA	SPRING/GAS - 100 LB - 20" EXTENDED/12" COMPRESSED
	126263-02-02B	EA	BRACKET - GAS SPRING W/BALL STUD - E-COATED
	132892-08-01A	FT	SEAL - BULB/SINGLE - W/U CHANNEL - BLACK

COPYRIGHT © 2006 WINNEBAGO INDUSTRIES INC.

EXTERIOR DOORS & COMPARTMENTS GROUP (CONTINUED)

DOOR & COMPARTMENT LAYOUT (CONTINUED)

KEY	PART NUMBER	U/M	DESCRIPTION
17	076767-07-000	EA	CABLE - STAINLESS STEEL - 7.1"
18	152148-21-T77	EA	VALANCE/DOOR - W/O HDW - LOUVERED - 69.4" X 30.3" W/TAPER
19	140309-03-02B	EA	ANGLE - FURNACE DOOR - E-COATED
20	152148-17-T77	EA	VALANCE/DOOR - W/O LATCH/HDW - 43.1" X 30.3" W/TAPER
			FROM: 00-00-00 THRU: 08-25-05
20	152148-30-T77	EA	VALANCE/DOOR - W/O LATCH/HDW - 42.5" X 26.9" - W/TAPER
			FROM: 08-26-05 THRU: 99-99-99
	132873-F9-000	EA	ROD - LATCH - 29.8" W/3/4" DOG LEG
	132873-30-000	EA	ROD - LATCH - 17.2" W/3/4" DOG LEG
			FROM: 00-00-00 THRU: 08-21-05
	135624-77-01B	EA	ROD - LATCH
			FROM: 08-22-05 THRU: 99-99-99
	130053-01-01A	EA	STRIKER - LUGGAGE DOOR - FLUSH - BLACK
	143793-01-01A	EA	SHIM - STRIKER - LUGGAGE - 3/64" - BLACK
	142569-17-000	EA	SPRING/GAS - 90 LB - 12" EXTENDED/8.5" COMPRESSED
	126263-02-02B	EA	BRACKET - GAS SPRING W/BALL STUD - E-COATED
	132892-08-01A	FT	SEAL - BULB/SINGLE - W/U CHANNEL - BLACK
21	148331-01-01A	EA	PLUG - OVAL/LARGE - BLACK
22	152148-19-T77	EA	VALANCE/DOOR - W/O LATCH/HDW - 22.9" X 30.3" W/TAPER
			FROM: 00-00-00 THRU: 08-25-05
22	152148-31-T77	EA	VALANCE/DOOR - W/O LATCH/HDW - 22.9" X 30.3" - W/TAPER
			FROM: 08-26-05 THRU: 99-99-99
	132873-46-000	EA	ROD - LATCH - 5.3" W/3/4" DOG LEG
	132873-47-000	EA	ROD - LATCH - 7.1" W/3/4" DOG LEG
			FROM: 00-00-00 THRU: 08-21-05
	135624-43-01B	EA	ROD - LATCH
			FROM: 08-22-05 THRU: 99-99-99
	130053-01-01A	EA	STRIKER - LUGGAGE DOOR - FLUSH - BLACK
	143793-01-01A	EA	SHIM - STRIKER - LUGGAGE - 3/64" - BLACK
	142569-17-000	EA	SPRING/GAS - 90 LB - 12" EXTENDED/8.5" COMPRESSED
	126263-02-02B	EA	BRACKET - GAS SPRING W/BALL STUD - E-COATED
	107721-07-000	FT	SEAL - ACCESS DOOR - .9"WIDE X 1.1"HIGH
23	152148-06-T77	EA	VALANCE/DOOR - W/O LATCH/HDW - 37.4" X 30.3"
	132873-27-000	EA	ROD - LATCH - 12.5" W/3/4" DOG LEG
	132873-28-000	EA	ROD - LATCH - 14.4" W/3/4" DOG LEG
			FROM: 00-00-00 THRU: 08-21-05
	135624-76-01B	EA	ROD - LATCH
			FROM: 08-22-05 THRU: 99-99-99
	130053-01-01A	EA	STRIKER - LUGGAGE DOOR - FLUSH - BLACK
	143793-01-01A	EA	SHIM - STRIKER - LUGGAGE - 3/64" - BLACK
	142569-14-000	EA	SPRING/GAS - 100 LB - 20" EXTENDED/12" COMPRESSED
	126263-02-02B	EA	BRACKET - GAS SPRING W/BALL STUD - E-COATED
	107721-07-000	FT	SEAL - ACCESS DOOR - .9"WIDE X 1.1"HIGH
24	154042-03-T77	EA	PANEL - WHEEL LIP - DRIVERS/REAR
	139793-03-01A	EA	HINGE - CENTER/VALANCE DOOR - W/O BALL STUD
25	132605-32-02B	EA	PLATE/SEAL - FILLER PANEL - E-COATED
25	154043-02-T77	EA	PANEL/DOOR - FUEL FILL - W/O LOCK - BLACK
*	110506-A2-000	EA	LOCK - TWIST - 26.45MM
	110506-51-000	EA	CASE/CYLINDER - TWIST LATCH - W/O CAM - 1" - 596669
	110506-78-000	EA	CAM - LOCK
	153306-01-01A	EA	HINGE - PIANO - 1 1/2" X 5" - UNPAINTED
26	131383-03-02A	EA	BRACKET - SHOWER HEAD - WHITE
27	154041-01-T77	EA	PANEL - WHEEL LIP - DRIVERS/FRONT
	107865-28-000	EA	ROD - SUPPORT - VALANCE PANEL - 17.7"
			FROM: 00-00-00 THRU: 08-07-05
28	132654-07-01A	EA	SUPPORT - WHEEL LIP - BLACK - 4.5"
29	154383-01-04B	EA	TREAD/STEP - DRIVER - BLACK
	038327-01-000	EA	TAPE - ANTI-SLIP - 2" X 60'
30	154383-02-04B	EA	TREAD/STEP - DRIVER - BLACK
	038327-01-000	EA	TAPE - ANTI-SLIP - 2" X 60'
31	138143-06-02B	EA	SUPPORT/STEP - DRIVER - E-COATED
32	138143-08-02B	EA	SUPPORT/STEP - DRIVER - E-COATED
33	144919-03-02B	EA	DIRT GUARD - E-COATED

COPYRIGHT © 2006 WINNEBAGO INDUSTRIES INC.

EXTERIOR DOORS & COMPARTMENTS GROUP (CONTINUED)

DOOR & COMPARTMENT LAYOUT (CONTINUED)

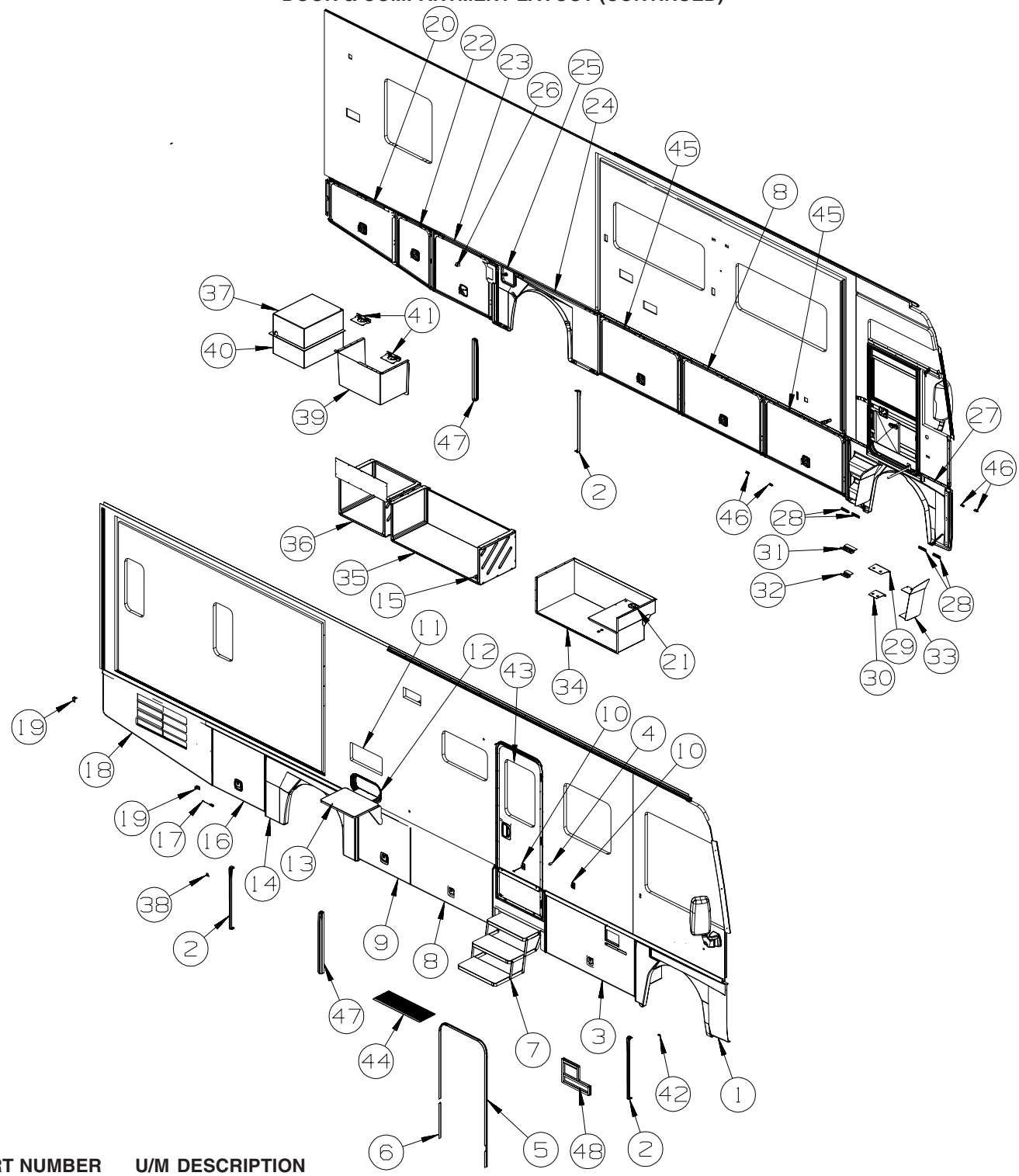

KEY	PART NUMBER	U/M	DESCRIPTION
34	152067-02-T77	EA	COMPARTMENT - WATER HEATER
35	152066-09-T77	EA	COMPARTMENT - LUGGAGE
36	152066-03-T77	EA	COMPARTMENT - LUGGAGE
37	132315-07-000	EA	COMPARTMENT - POWER CORD
38	143143-01-01A	EA	ANGLE - SUPPORT/TRIM
39	152174-01-000	EA	COMPARTMENT - DRAINAGE - PLASTIC
	130377-02-000	EA	TUBE/DRAIN - KAZOO - 1 1/2" X 4"
40	132315-06-000	EA	COMPARTMENT - POWER CORD
41*	142226-02-01A	EA	HATCH - POWER
42	143143-02-01A	EA	ANGLE - SUPPORT/TRIM

COPYRIGHT © 2006 WINNEBAGO INDUSTRIES INC.

EXTERIOR DOORS & COMPARTMENTS GROUP (CONTINUED)

DOOR & COMPARTMENT LAYOUT (CONTINUED)

KEY	PART NUMBER	U/M	DESCRIPTION
43	P32206-17-T59	EA	DOOR - ENTRY W/SCREEN DOOR - W/O WINDOW/LATCH (T89, T90, T91, T92)
43	P32206-17-T65	EA	DOOR - ENTRY W/SCREEN DOOR - W/O WINDOW/LATCH (T93, T94, T95, T96)
43	P32206-17-AA2	EA	DOOR - ENTRY W/SCREEN DOOR - W/O WINDOW/LATCH (T97, T98, T99, T00)
43	P32206-17-T77	EA	DOOR - ENTRY W/SCREEN DOOR - W/O WINDOW/LATCH (T89, T90, T91, T92) - FULL BODY PAINT
43	P32206-17-T81	EA	DOOR - ENTRY W/SCREEN DOOR - W/O WINDOW/LATCH (T93, T94, T95, T96) - FULL BODY PAINT
43	P32206-17-T85	EA	DOOR - ENTRY W/SCREEN DOOR - W/O WINDOW/LATCH (T97, T98, T99, T00) - FULL BODY PAINT
44	133114-01-01A	EA	TREAD - STEP/RU GE DOOR - OFF SET - BLACK
	120494-04-02B	EA	SHIM - STRIKER - LUGGAGE DOOR - 3/16" - E-COATED
	132892-08-01A	FT	SEAL - BULB/SINGLE - W/U CHANNEL - BLACK
46	132597-01-02B	EA	ANGLE/SUPPORT/TRIM - 2" - E-COATED
47	154044-01-10A	EA	END CAP - WHEEL LIP - RIGHT HAND - BLACK
48	133049-08-T77	EA	TRIM - COVER/WATER HEATER
ENTRY DOOR LOCK CYLINDERS			
	138287-11-000	EA	CYLINDER/LOCK - ENTRY DOOR - MASTER W/3M ICON - (3041)
	138287-12-000	EA	CYLINDER/LOCK - ENTRY DOOR - MASTER W/3M ICON - (3042)
	138287-13-000	EA	CYLINDER/LOCK - ENTRY DOOR - MASTER W/3M ICON - (3043)
	138287-14-000	EA	CYLINDER/LOCK - ENTRY DOOR - MASTER W/3M ICON - (3044)
	138287-15-000	EA	CYLINDER/LOCK - ENTRY DOOR - MASTER W/3M ICON - (3045)
	138287-16-000	EA	CYLINDER/LOCK - ENTRY DOOR - MASTER W/3M ICON - (3046)
	138287-17-000	EA	CYLINDER/LOCK - ENTRY DOOR - MASTER W/3M ICON - (3047)
	138287-18-000	EA	CYLINDER/LOCK - ENTRY DOOR - MASTER W/3M ICON - (3048)
	138287-19-000	EA	CYLINDER/LOCK - ENTRY DOOR - MASTER W/3M ICON - (3049)
	138287-20-000	EA	CYLINDER/LOCK - ENTRY DOOR - MASTER W/3M ICON - (3050)
	138292-01-000	EA	SEAL - LOCK CYLINDER
VALANCE DOOR & WATER FILL DOOR LOCK CYLINDERS			
	138289-11-000	EA	CYLINDER/LOCK - ACCESS DOORS - REDUCED SENSITIVITY (3041)
	138289-12-000	EA	CYLINDER/LOCK - ACCESS DOORS - REDUCED SENSITIVITY (3042)
	138289-13-000	EA	CYLINDER/LOCK - ACCESS DOORS - REDUCED SENSITIVITY (3043)
	138289-14-000	EA	CYLINDER/LOCK - ACCESS DOORS - REDUCED SENSITIVITY (3044)
	138289-15-000	EA	CYLINDER/LOCK - ACCESS DOORS - REDUCED SENSITIVITY (3045)
	138289-16-000	EA	CYLINDER/LOCK - ACCESS DOORS - REDUCED SENSITIVITY (3046)
	138289-17-000	EA	CYLINDER/LOCK - ACCESS DOORS - REDUCED SENSITIVITY (3047)
	138289-18-000	EA	CYLINDER/LOCK - ACCESS DOORS - REDUCED SENSITIVITY (3048)
	138289-19-000	EA	CYLINDER/LOCK - ACCESS DOORS - REDUCED SENSITIVITY (3049)
	138289-20-000	EA	CYLINDER/LOCK - ACCESS DOORS - REDUCED SENSITIVITY (3050)
	138288-11-000	EA	KEY - REVERSIBLE - #3041 - T/M 16169-02-3041
	138288-12-000	EA	KEY - REVERSIBLE - #3042 - T/M 16169-02-3042
	138288-13-000	EA	KEY - REVERSIBLE - #3043 - T/M 16169-02-3043
	138288-14-000	EA	KEY - REVERSIBLE - #3044 - T/M 16169-02-3044
	138288-15-000	EA	KEY - REVERSIBLE - #3045 - T/M 16169-02-3045
	138288-16-000	EA	KEY - REVERSIBLE - #3046 - T/M 16169-02-3046
	138288-17-000	EA	KEY - REVERSIBLE - #3047 - T/M 16169-02-3047
	138288-18-000	EA	KEY - REVERSIBLE - #3048 - T/M 16169-02-3048
	138288-19-000	EA	KEY - REVERSIBLE - #3049 - T/M 16169-02-3049
	138288-20-000	EA	KEY - REVERSIBLE - #3050 - T/M 16169-02-3050

***COMPONENT PARTS LISTED LATER IN THIS GROUP**

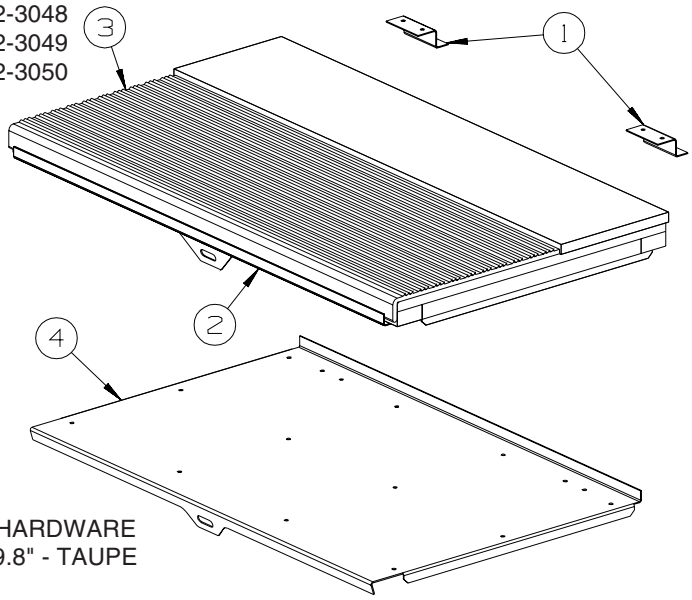

KEY	PART NUMBER	U/M	DESCRIPTION
1	101222-01-04A	EA	BRACKET - CATCH - LID - E-COATED
2	P20256-07-000	EA	LID/DOOR - ENTRY STEP - W/O CARPET/HARDWARE
3	133114-02-01A	EA	TREAD - STEP/RUBBER - W/LIP - 28.5" X 9.8" - TAUPE
4	123330-03-02B	EA	SUPPORT - ENTRY STEP - E-COATED

COPYRIGHT © 2006 WINNEBAGO INDUSTRIES INC.

EXTERIOR DOORS & COMPARTMENTS GROUP (CONTINUED)

COMPENENT PARTS FOR DOOR & COMPARTMENT LAYOUT

084103-08-000

KEY	PART NUMBER	U/M	DESCRIPTION	VENDOR NO.
	084104-01-700	EA	LOCK-MALE, FASTENER	201-721-010
	084104-01-701	EA	LOCK-FEMALE, FASTENER	201-802-010

110506-A1-000, 110506-A2-000, 110506-26-000, 110506-27-000, 110506-36-000

KEY	PART NUMBER	U/M	DESCRIPTION	VENDOR NO.
	110506-40-700	EA	HDWE KIT	596950AAL

142226-02-01A

KEY	PART NUMBER	U/M	DESCRIPTION	VENDOR NO
	142226-02-700	EA	TAB/LOCKING - ESCAPE (RED)	9667709

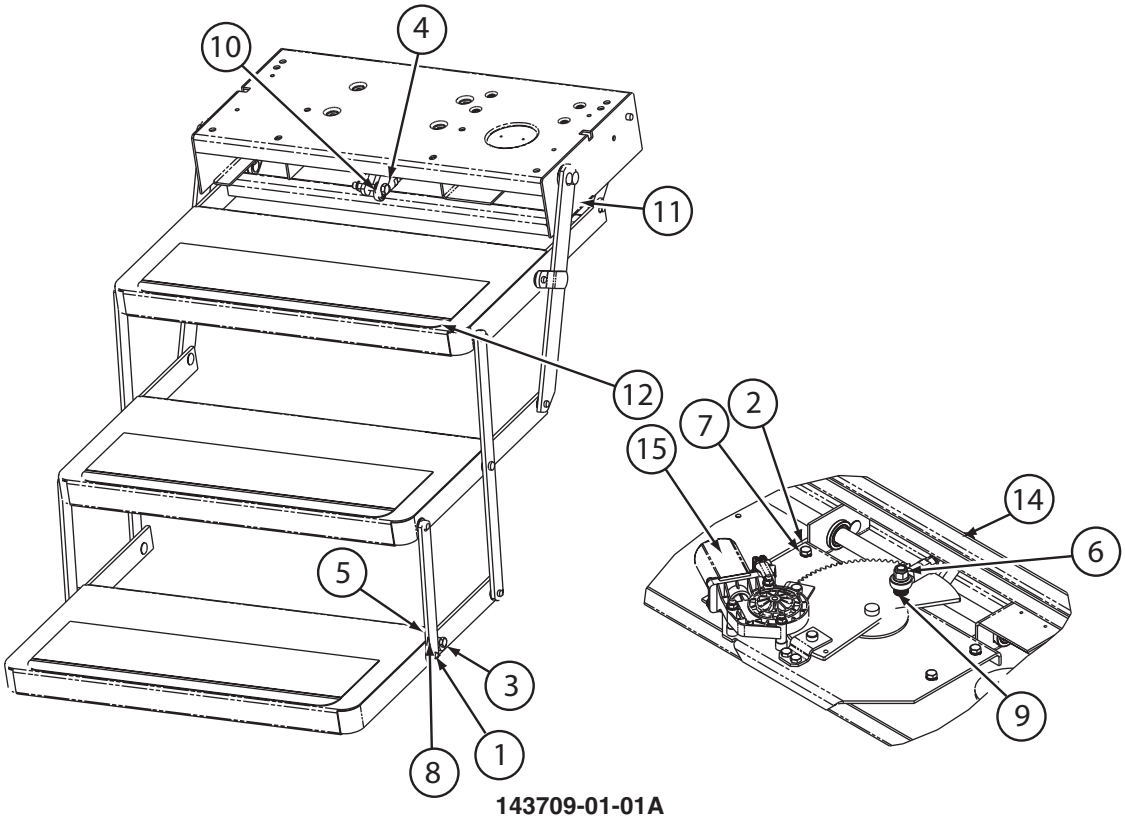

143709-01-01A

KEY	PART NUMBER	U/M	DESCRIPTION	VENDOR NO.
1	143709-01-700	EA	CAM STOP	1102200
10	143709-01-706	EA	CONTROL UNIT	909508003
11	143709-01-701	EA	BUMPER - BLACK (RUBBER STOP0	1602000
12	143709-01-702	EA	TREAD/NON-SKID _6" X 21" BLK	1915260
13	143709-01-703	EA	FRAME ONLY PAINTED BLACK 25	3202050
14	143709-01-704	EA	LINK ASM ELECTRIC STEP 24/25	3380050
15	143709-01-705	EA	MOTOR ASSEMBLY 24/25 STEP	3392151
	088746-01-705	EA	LIGHT-UNDER STEP	9004
			CONTACT WINNEBAGO PART SALES FOR UNLISTED COMPONENT(S)	

143709-02-01A

KEY	PART NUMBER	U/M	DESCRIPTION	VENDOR NO.
1	143709-01-700	EA	CAM STOP	1102200
13	143709-01-701	EA	BUMPER - BLACK (RUBBER STOP0	1602000
15	143709-01-702	EA	TREAD/NON-SKID _6" X 21" BLK	1915260
16	143709-01-703	EA	FRAME ONLY PAINTED BLACK 25	908025000
17	143709-02-700	EA	LINK/ASSEMBLY 24/25 SERIES	3380050
18	143709-02-701	EA	MOTOR ASM W/TABLE 24/25 STEP	3392152
18	094707-04-701	EA	MOTOR “AM 214” F/IMGL STEPS	1101428
	088746-01-705	EA	LIGHT-UNDER STEP	9004
	094707-033-701	EA	PLUG - 4-WAY - PACKARD	909306
	094707-04-700	EA	CONTROL UNIT W/OVERRIDE	909510000
	094707-04-711	EA	KWIKTEST - W/4-WAY PIGTAIL	909518000
			CONTACT WINNEBAGO PART SALES FOR UNLISTED COMPONENT(S)	

COPYRIGHT © 2006 WINNEBAGO INDUSTRIES INC.

EXTERIOR DOORS & COMPARTMENTS GROUP (CONTINUED)

COMPARTMENT DOOR PIECE PARTS

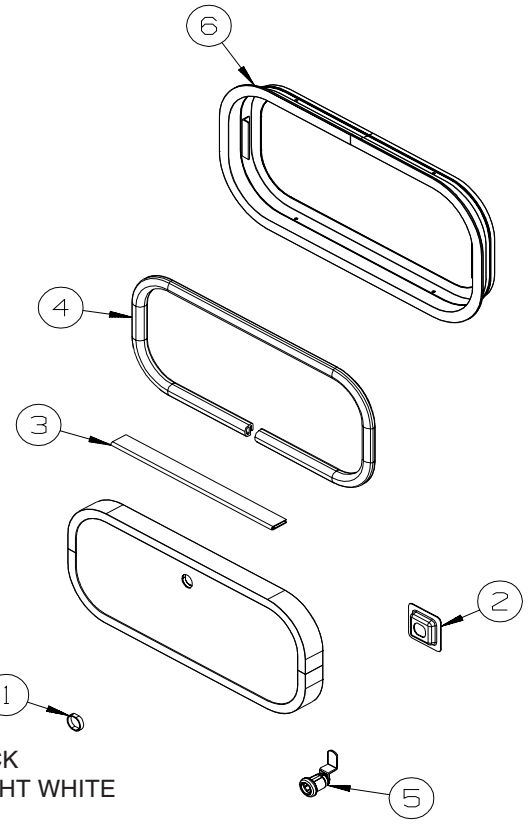

KEY	PART NUMBER	U/M	DESCRIPTION
1	139325-01-000	EA	SPACER - LOCK - 6MM
	139337-01-000	EA	GASKET - LOCK
2	097111-02-04A	EA	POCKET - LOCK - REAR DOOR - BLACK
3	081801-FN-000	EA	HINGE - DOOR - PIANO - 2" X 96" - BLACK
3	081801-V3-000	EA	HINGE - DOOR - PIANO - 2" X 96" - BRIGHT WHITE
4	106850-02-000	FT	SEAL-E - SPONGE RUBBER - .43" X .75"
			FROM: 00-00-00 THRU: 07-31-05
4	156386-01-01A	FT	SEAL - BULB - .4” X .5” - W/ADHESIVE BACK - NOT ILLUSTRATED
			FROM: 08-01-05 THRU: 99-99-99
5	138290-02-000	EA	CASE - W/CAM - W/O CYLINDER/KEY
6	056795-01-000	FT	TAPE-SEAL, 1/8" X 3/8" WIDE - PRESS ON
			FROM: 09-26-05 THRU: 99-99-99

COPYRIGHT © 2006 WINNEBAGO INDUSTRIES INC.

EXTERIOR DOORS & COMPARTMENTS GROUP (CONTINUED)

COMPARTMENT DOOR PIECE PARTS (CONTINUED)

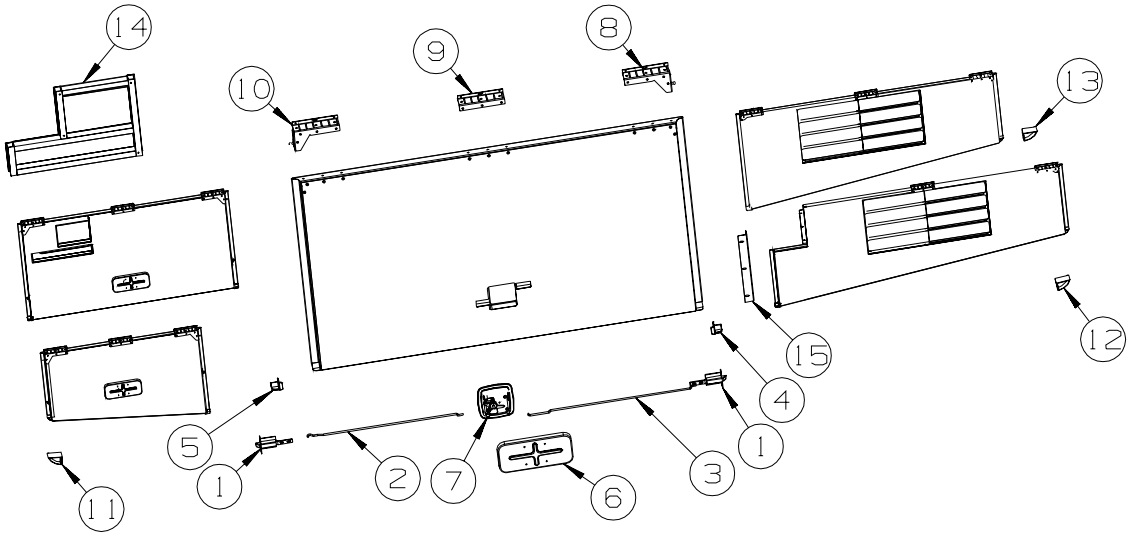

KEY	PART NUMBER	U/M	DESCRIPTION
1	121947-01-01A	EA	BOLT - SLIDE W/PLASTIC PLUNGER
2	132873-01-000	EA	ROD - LATCH (BLANK) - 37.3"
3	132873-02-000	EA	ROD - LATCH (BLANK) - 37.3"
			FROM: 00-00-00 THRU: 08-28-05
3	135624-71-01B	EA	ROD - LATCH (BLANK) - 37.3"
			FROM: 08-29-05 THRU: 99-99-99
4	135276-01-01A	EA	REINFORCEMENT - CORNER - LEFT HAND (FACING DOOR) - BLACK
5	135276-02-01A	EA	REINFORCEMENT - CORNER - RIGHT HAND (FACING DOOR) - BLACK
6	137359-01-01A	EA	COVER - LATCH - WHITE
7	138277-01-01A	EA	LATCH/PADDLE - COMPARTMENT DOOR - BLACK - KEY ONE
			FROM: 00-00-00 THRU: 07-24-05
7	154900-01-01A	EA	LATCH/PADDLE - LOCKING - COMPT DOOR - KEY ONE - BLACK
			FROM: 07-25-05 THRU: 99-99-99
7	112949-02-05A	EA	LATCH/PADDLE - NON-LOCKING - BLACK
			FROM: 00-00-00 THRU: 07-24-05
7	154900-02-01A	EA	LATCH/PADDLE - NON LOCKING - COMPT DOOR - BLACK
			FROM: 07-25-05 THRU: 99-99-99
8	139793-01-01A	EA	HINGE - VALANCE DOOR - W/BALL STUD
8	139793-04-01A	EA	HINGE - RIGHT HAND/VALANCE DOOR - W/O BALL STUD
9	139793-03-01A	EA	HINGE - CENTER/VALANCE DOOR - W/O BALL STUD
10	139793-02-01A	EA	HINGE - VALANCE DOOR - W/BALL STUD
10	139793-05-01A	EA	HINGE - LEFT HAND/VALANCE DOOR - W/O BALL STUD
11	141601-02-01A	EA	END CAP/VALANCE DOOR - DRVR SIDE/REAR OF DOOR/1MM NOTCH
11	141601-04-01A	EA	END CAP/VALANCE DOOR - DRVRSIDE/REAR OF DOOR-W/1.5MM NOTCH
12	141601-01-01A	EA	END CAP/VALANCE DOOR - PASS SIDE/REAR OF DOOR-W/1MM NOTCH
13	141601-03-01A	EA	END CAP/VALANCE DOOR-PASS SIDE/REAR OF DOOR-W/1.5MM NOTCH
14	133049-08-T77	EA	TRIM - COVER/WATER HEATER
14	133049-10-S64	EA	TRIM - COVER/WATER HEATER - 38J ONLY
15	113041-18-02B	EA	ANGLE/MOUNT - BUMPER - E-COATED - 10.5” LONG
15	113041-19-02B	EA	ANGLE/MOUNT - BUMPER - E-COATED - 7.8” LONG

COPYRIGHT © 2006 WINNEBAGO INDUSTRIES INC.

EXTERIOR DOORS & COMPARTMENTS GROUP (CONTINUED)

DRIVERS

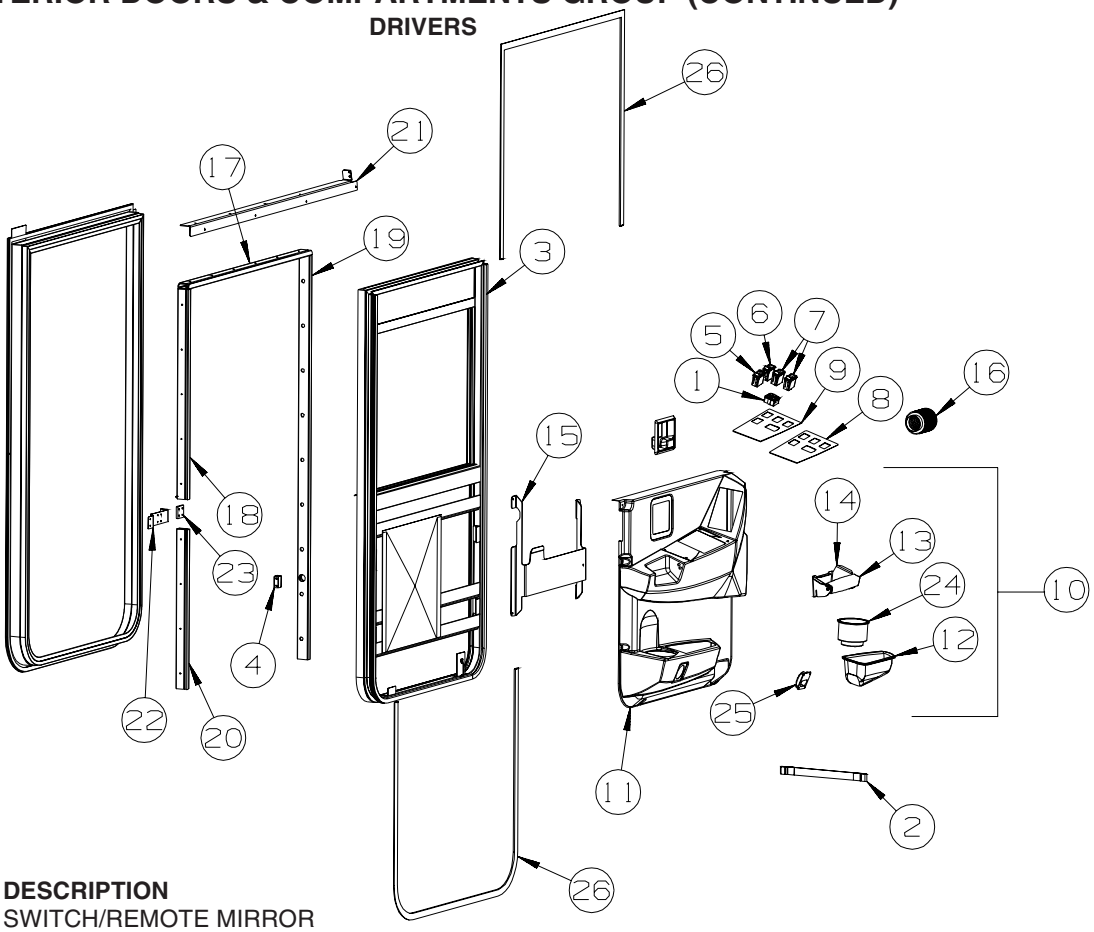

KEY	PART NUMBER	U/M	DESCRIPTION
1	088246-01-000	EA	SWITCH/REMOTE MIRROR
2	109378-01-000	EA	STRAP - CHECK - DRIVER DOOR - 12.8"
3*	125581-09-01A	EA	DOOR - DRIVER - POWER WINDOW/LOCK
4	128131-01-01A	EA	SPACER/SWITCH - DOME - BLACK
5	145638-02-01A	EA	SWITCH/ROCKER - SPST (ON/OFF) - LIGHTED - BLACK - HEATED MIRROR
5	108355-02-000	EA	HOUSING - SWITCH - 12 POSITION
6	145638-09-01A	EA	SWITCH/ROCKER - DPDT (ON/OFF/ON) - BLACK - POWER WINDOW
6	108355-02-000	EA	HOUSING - SWITCH - 12 POSITION
7	145638-09-01A	EA	SWITCH/ROCKER - DPDT (ON/OFF/ON) - BLACK - POWER SUNVISOR
7	108355-02-000	EA	HOUSING - SWITCH - 12 POSITION
7	145754-01-01A	EA	SWITCH - BLANK - BLACK
8	145926-10-02B	EA	INSERT - SWITCH PLATE - 4 HOLE/RELAY SLOT - E-COATED
9	148653-08-01A	EA	APPLIQUE - DRIVERS DOOR - DARK RIVERSTONE
10	148822-02-S72	EA	PANEL - DRIVER DOOR/INNER - RIVERSTONE
10	148822-02-S64	EA	PANEL - DRIVER DOOR/INNER - CASHMERE
11	148823-02-19A	EA	PANEL - INNER/DRIVER DOOR - RIVERSTONE
11	148823-02-20A	EA	PANEL - INNER/DRIVER DOOR - CASHMERE
12	148827-01-19A	EA	POCKET/STORAGE - DRIVER DOOR - RIVERSTONE
12	148827-01-20A	EA	POCKET/STORAGE - DRIVER DOOR - CASHMERE
13	148833-01-01A	EA	HANDLE - DRIVER DOOR - RIVERSTONE
13	148833-01-02A	EA	HANDLE - DRIVER DOOR - CASHMERE
14	149512-01-02B	EA	BRACKET - DOOR HANDLE - E-COATED
15	149513-01-02B	EA	BRACKET - SUPPORT/DOOR HANDLE - E-COATED
16	117802-01-000	EA	GROMMET - CONVOLUTED - 2"
17	125725-01-01A	EA	FRAME - DRIVER DOOR - 33.5" - BLACK
18	125725-03-01A	EA	FRAME - DRIVER DOOR - 27.8" - BLACK
19	125725-07-01A	EA	FRAME - DRIVER DOOR - 53.3" - BLACK
20	125725-08-01A	EA	FRAME - DRIVER DOOR - 21.4" - BLACK
21	125804-02-02B	EA	ANGLE - DOOR SUPPORT - E-COATED
22	126506-01-02B	EA	BRACKET - STRIKE - DRIVER DOOR - E-COATED
23	126534-01-02B	EA	SPACER - STRIKE - DRIVER DOOR - E-COATED
24	134566-01-01A	EA	HOLDER - CUP - TWO STEP - BLACK
25	108354-01-01A	EA	LIGHT - COURTESY
26	109235-01-01A	FT	COVER - SCREW - MAT BLACK
26	109235-01-05A	FT	COVER - SCREW - BRIGHT WHITE

***COMPONENT PARTS LISTED LATER IN THIS GROUP**

COPYRIGHT © 2006 WINNEBAGO INDUSTRIES INC.

EXTERIOR DOORS & COMPARTMENTS GROUP (CONTINUED)

COMPONENT PARTS FOR DRIVERS

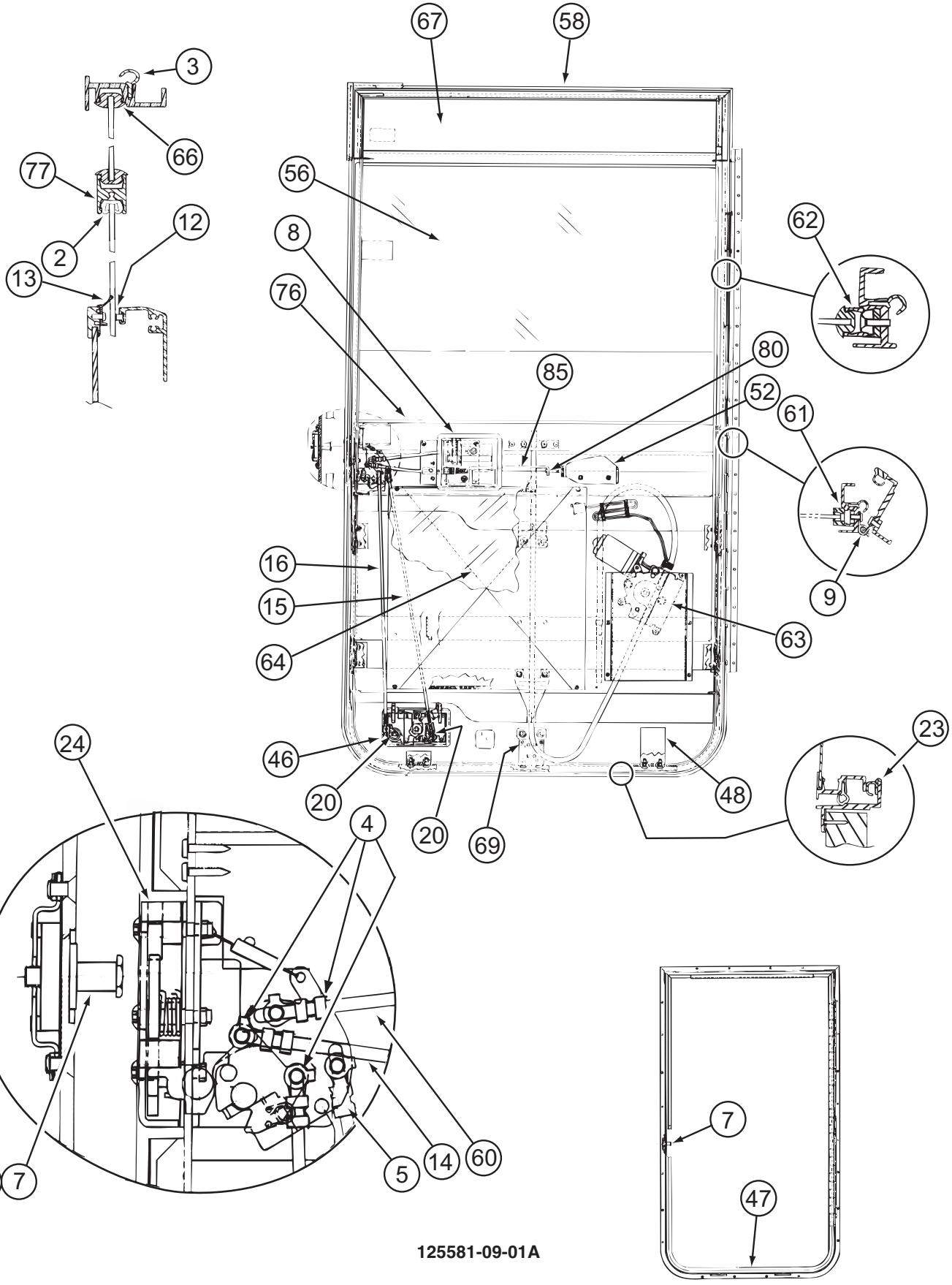

125581-09-01A

COPYRIGHT © 2006 WINNEBAGO INDUSTRIES INC.

EXTERIOR DOORS & COMPARTMENTS GROUP (CONTINUED)

COMPONENT PARTS FOR DRIVERS (CONTINUED)

125581-09-01A (CONTINUED)

KEY	PART NUMBER	U/M	DESCRIPTION	VENDOR NO.
2	106469-01-705	FT	CHANNEL-RUN, SLIDING	122-010850
3	106469-01-702	EA	SEAL-DOOR FRAME (DOOR)EA=1	122-040984
4	106469-04-714	EA	ROD-CLIP, RH	80801
5	106469-04-713	EA	ROD-CLIP, LH	80802
6	106469-04-704	EA	NUT ASSEMBLY-CAGED W/STRIKER	11920-16
7	106469-04-703	EA	BOLT-STRIKER, W/WASHER	10335-16
8	106469-04-712	EA	HANDLE/DOOR-INNER W/HARDWARE	11297-01
9	106469-05-702	EA	HINGE - 42"	211-041194
12	106469-01-709	FT	WEATHERSTRIP FUZZY	171-040630
13	125581-03-703	EA	WEATHERSTRIP - BELTING	132-041069
13	125581-09-712	EA	WEATHERSTRIP/BELT - F/GLASS	490664
14	106469-04-711	EA	ROD-LOCK, HORIZONTAL	15508-01
15	125581-04-700	EA	ROD - LATCH/VERTICAL ADJUST.	203-041767
16	125581-04-701	EA	ROD - LOCK/VERTICAL ADJUST.	203-041768
20	128913-01-707	EA	NUT - HEX/NYLOCK - 1/4 - 20	233-062447
23	106469-01-723	EA	SEAL-BULB ASM. (DOOR JAMB)	171-040985
24	106469-05-706	EA	LATCH-ROTARY, W/LINKAGE	16512-01
46	125581-09-700	EA	PADDLE-W/O LOCK RH (REV KEY)	17191-02
46	125581-09-701	EA	LATCH/LOCK-DRVR DR (REV KEY)	PARTS DEPT
46	125581-09-702	EA	LATCH/LOCK-DRVR DR (REV KEY)	PARTS DEPT
46	125581-09-703	EA	LATCH/LOCK-DRVR DR (REV KEY)	PARTS DEPT
46	125581-09-704	EA	LATCH/LOCK-DRVR DR (REV KEY)	PARTS DEPT
46	125581-09-705	EA	LATCH/LOCK-DRVR DR (REV KEY)	PARTS DEPT
46	125581-09-706	EA	LATCH/LOCK-DRVR DR (REV KEY)	PARTS DEPT
46	125581-09-707	EA	LATCH/LOCK-DRVR DR (REV KEY)	PARTS DEPT
46	125581-09-708	EA	LATCH/LOCK-DRVR DR (REV KEY)	PARTS DEPT
46	125581-09-709	EA	LATCH/LOCK-DRVR DR (REV KEY)	PARTS DEPT
46	125581-09-710	EA	LATCH/LOCK-DRVR DR (REV KEY)	PARTS DEPT
46	125581-09-721	EA	LATCH/LOCK-DRVR DR (3041)	PARTS DEPT (3041)
46	125581-09-722	EA	LATCH/LOCK-DRVR DR (3042)	PARTS DEPT (3042)
46	125581-09-723	EA	LATCH/LOCK-DRVR DR (3043)	PARTS DEPT (3043)
46	125581-09-724	EA	LATCH/LOCK-DRVR DR (3044)	PARTS DEPT (3044)
46	125581-09-725	EA	LATCH/LOCK-DRVR DR (3045)	PARTS DEPT (3045)
46	125581-09-726	EA	LATCH/LOCK-DRVR DR (3046)	PARTS DEPT (3046)
46	125581-09-727	EA	LATCH/LOCK-DRVR DR (3047)	PARTS DEPT (3047)
46	125581-09-728	EA	LATCH/LOCK-DRVR DR (3048)	PARTS DEPT (3048)
46	125581-09-729	EA	LATCH/LOCK-DRVR DR (3049)	PARTS DEPT (3049)
46	125581-09-730	EA	LATCH/LOCK-DRVR DR (3050)	PARTS DEPT (3050)
47	125581-04-703	EA	FRAME - MOUNTING - BLACK	V180-35L
48	125581-07-703	EA	BRACKET-ALUMINUM “L”(INSIDE)	N135-55
56	125581-08-703	EA	GLASS-ROLL-UP 29.46"X29.37"	106-042081
56	125581-09-711	EA	GLASS-ROLL UP 24"H X 29.37"W	490207
58	125581-08-702	EA	FRAME/DOOR - SUB ASSY-BLACK	V220-98L
60	106469-04-705	EA	ROD-LATCH, HORIZONTAL	203-041139
61	125581-08-701	EA	CHANNEL/VERT ROLL UP-BLACK	V220-60
62	125581-08-700	EA	CHANNEL/VERT STA GLASS-BLACK	V220-61
63	125581-03-702	EA	REGULATOR-ELECTRIC-SPEC RH	410-040966
64	125581-06-700	EA	PANEL/INTERIOR	V164-97
66	125581-04-710	FT	VINYL - GLAZING	132-041484
67	125581-07-701	EA	GLASS-STATIONERY/4.95"X29.5"	106-042082
69	125581-04-711	EA	CHANNEL-GLASS - LIFT BRKT	N135-66
76	125581-03-701	EA	SILL - INNER - BLACK	V123-68L
77	125581-03-700	EA	MULLION RAIL- BLACK	V123-84
	106469-04-716	EA	LEVER-LOCKING-BLACK	80978-00
	125581-07-705	EA	BRACKET (L) F/SEAL PROTECT	490201
	125581-07-704	EA	BRACKET - STRAP/JAMB & DOOR	248-080394
	125581-10-701	EA	CLIP - CABLE	130-042047
	125581-09-731	EA	SPLINE-DRIVER DOOR WDO SEAL	491279

CONTACT WINNEBAGO PART SALES FOR UNLISTED COMPONENT(S)

COPYRIGHT © 2006 WINNEBAGO INDUSTRIES INC.

EXTERIOR DOORS & COMPARTMENTS GROUP (CONTINUED)

ENTRY

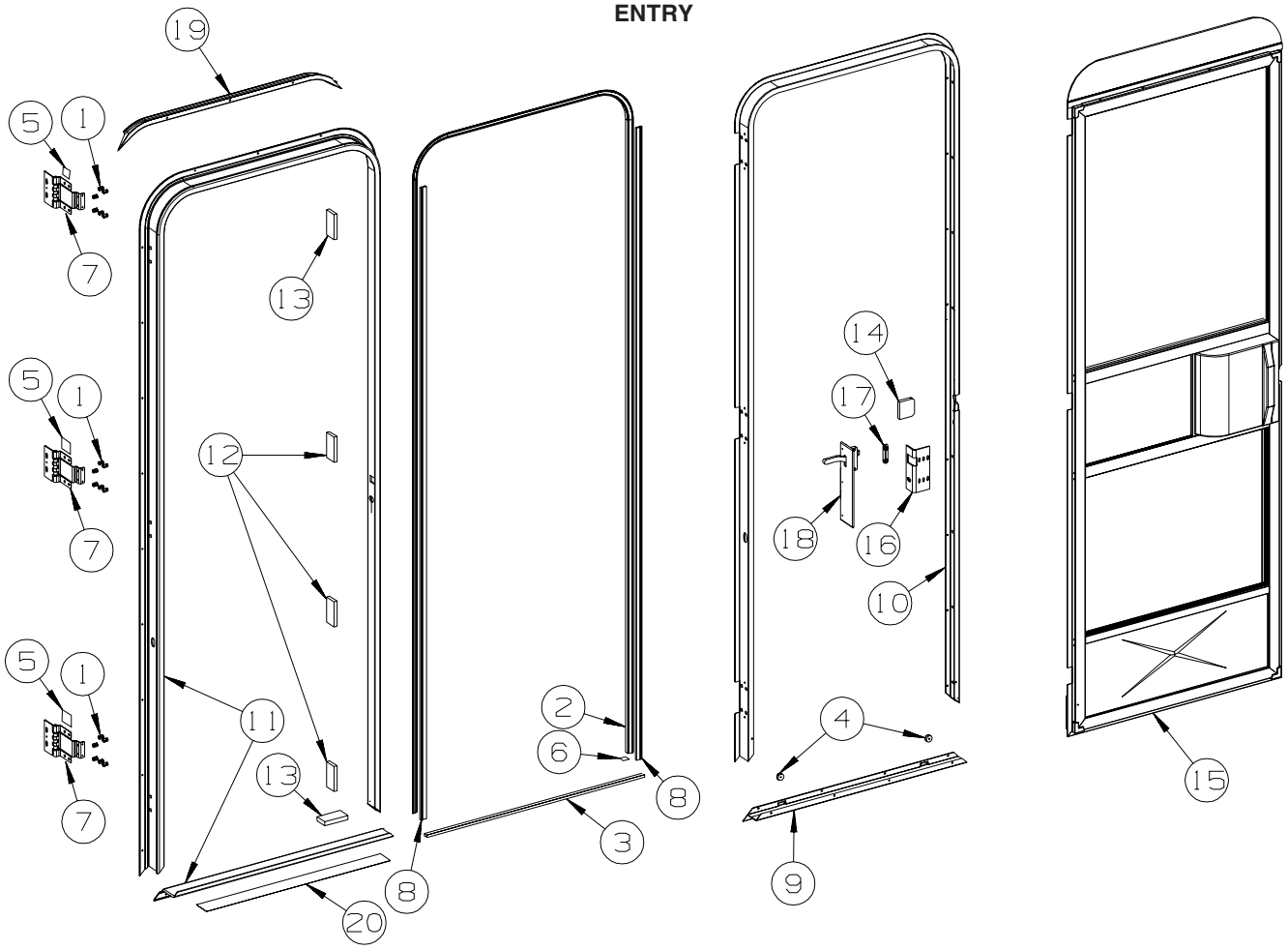

KEY	PART NUMBER	U/M	DESCRIPTION
1	039715-01-000	EA	NUT-SERT - 1/4" DIAMETER - 20 THREADS
2	075671-04-000	FT	SEAL - SPONGE - LAZY T - W/ADHESIVE STRIP - .5" WIDE
3	075673-05-000	FT	SEAL/PILE - .5" HIGH W/ADHESIVE BACK - BLACK
4	081914-02-000	EA	BUMPER - RUBBER - ROUND - 5/16" DIA. X 13/64" THICK
5	100128-02-000	FT	SEAL - FOAM/ADHESIVE BACK - .37" WIDE X .37" THICK
6	104692-01-000	FT	SEAL - ADHESIVE BACKED FOAM - 3/4" THICK X 3/4" WIDE X 25'
7	106719-01-05A	EA	HINGE - ENTRY DOOR - BRIGHT WHITE
7	106719-01-08A	EA	HINGE - ENTRY DOOR - BLACK - FULL BODY PAINT
8	118929-01-01A	FT	SEAL - PILE - PUSH ON
9	121893-03-02A	EA	FRAME - ENTRY DOOR/LOWER - BRIGHT WHITE
9	121893-03-03A	EA	FRAME - ENTRY DOOR/LOWER - BLACK - FULL BODY PAINT
10	121894-27-01A	EA	FRAME - ENTRY DOOR - BRIGHT WHITE
10	121894-27-02A	EA	FRAME - ENTRY DOOR - BLACK - FULL BODY PAINT
11	121898-14-01A	EA	JAMB - DOOR/ENTRANCE - BRIGHT WHITE
11	121898-14-02A	EA	JAMB - DOOR/ENTRANCE - BLACK - FULL BODY PAINT
12	125724-01-000	EA	SHIM - DOOR, ENTRANCE
13	125724-02-000	EA	SHIM - DOOR, ENTRANCE
14	130096-05-000	EA	FOAM - SCREEN DOOR, RETAINER
15	P32208-02-L32	EA	DOOR - SCREEN - W/O HARDWARE
15	P32208-02-S64	EA	DOOR - SCREEN - W/O HARDWARE - FULL BODY PAINT
16	137401-01-03B	EA	BRACKET - DOOR ANGLE - OFF WHITE
16	137401-01-02B	EA	BRACKET - DOOR ANGLE - E-COATED - FULL BODY PAINT
17	148364-01-12B	EA	STRIKE - SCREEN DOOR - BRIGHT WHITE
17	148364-01-04B	EA	STRIKE - SCREEN DOOR - BLACK - FULL BODY PAINT
18	132915-01-01A	EA	LATCH - SCREEN DOOR - BLACK
19	139054-19-01A	EA	CAP - DRIP - JAMB MOUNTED - BRIGHT WHITE
19	139054-19-02A	EA	CAP - DRIP - JAMB MOUNTED - BLACK - FULL BODY PAINT
20	038327-01-000	EA	TAPE - ANTI-SLIP - 2" X 60'

COPYRIGHT © 2006 WINNEBAGO INDUSTRIES INC.

EXTERIOR DOORS & COMPARTMENTS GROUP (CONTINUED)

SCREEN

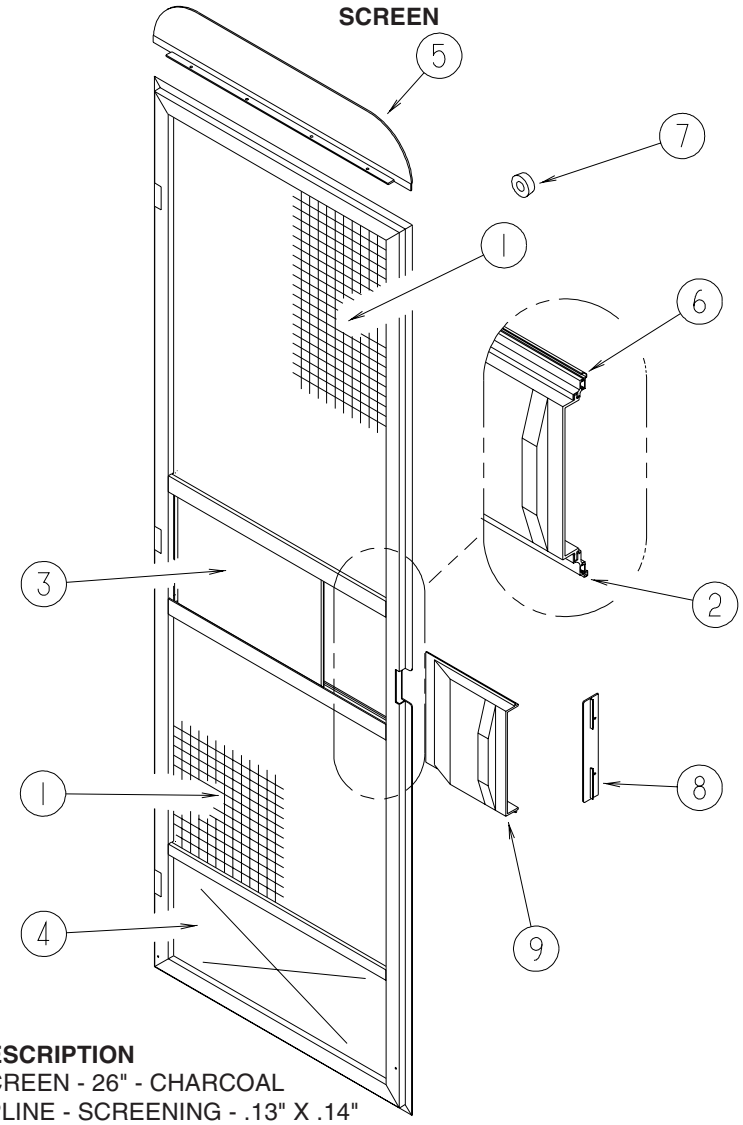

KEY	PART NUMBER	U/M	DESCRIPTION
1	002293-02-000	SF	SCREEN - 26" - CHARCOAL
2	002294-01-000	FT	SPLINE - SCREENING - .13" X .14"
3	016454-18-000	EA	INSERT/CENTER - SCREEN DOOR
4	078552-09-000	EA	INSERT - SCREEN DOOR - LOWER
5	078595-03-000	EA	PLATE - SCREEN DOOR
6	078777-08-000	FT	CHANNEL - SLIDER - 4 FOOT INCREMENTS
7	120863-09-000	EA	BUMPER - RUBBER/RADIUS TOP - 3/4" X 3/8" - LT GRAY
8	132081-01-01A	EA	STRIKE - SLIDER - SCREEN DOOR - BRIGHT WHITE
8	132081-01-03A	EA	STRIKE - SLIDER - SCREEN DOOR - BLACK - FULL BODY PAINT
9	132082-01-01A	EA	SLIDER - SCREEN DOOR - BRIGHT WHITE
9	132082-01-03A	EA	SLIDER - SCREEN DOOR - BLACK - FULL BODY PAINT

COPYRIGHT © 2006 WINNEBAGO INDUSTRIES INC.

EXTERIOR DOORS & COMPARTMENTS GROUP (CONTINUED)

LATCH - ENTRY

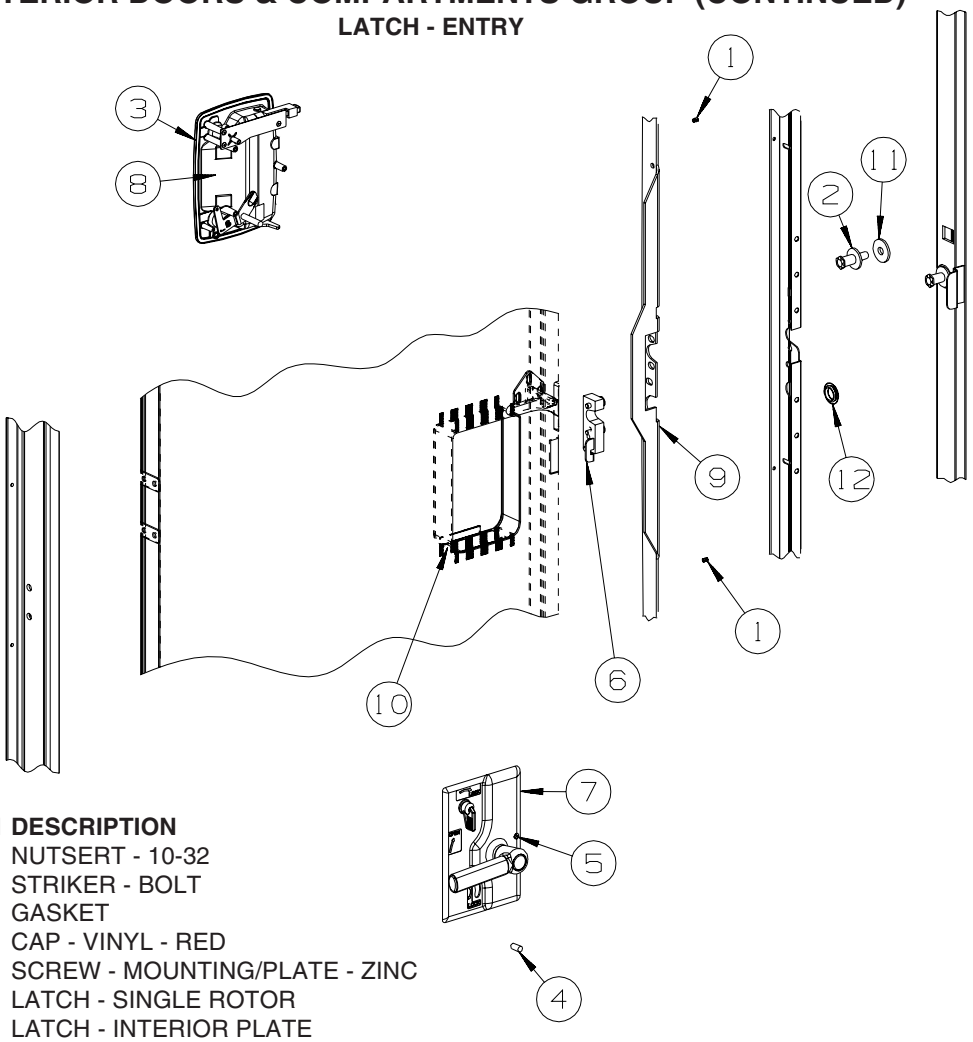

KEY	PART NUMBER	U/M	DESCRIPTION
1	072893-04-000	EA	NUTSERT - 10-32
2	092927-20-000	EA	STRIKER - BOLT
3	112782-04-01A	EA	GASKET
4	112782-05-01A	EA	CAP - VINYL - RED
5	112782-08-01A	EA	SCREW - MOUNTING/PLATE - ZINC
6	112782-22-01A	EA	LATCH - SINGLE ROTOR
7	112782-21-01A	EA	LATCH - INTERIOR PLATE
8	112782-20-01A	EA	LATCH - EXTERIOR - W/O LOCK CYLINDER W/ICON-REVERSIBLE KEY
9	132207-01-02B	EA	STIFFENER/DOOR - FORMED - E-COATED
10	137230-01-01A	EA	SPACER - NOTCHED, MILL
11	147900-01-01A	EA	SPACER - STRIKE BOLT, MILL
12	061420-14-000	EA	PLUG/PLASTIC - 7/8” DIAMETER - BLACK

COPYRIGHT © 2006 WINNEBAGO INDUSTRIES INC.

EXTERIOR SLIDEOUT GROUP

FRONT LEFT

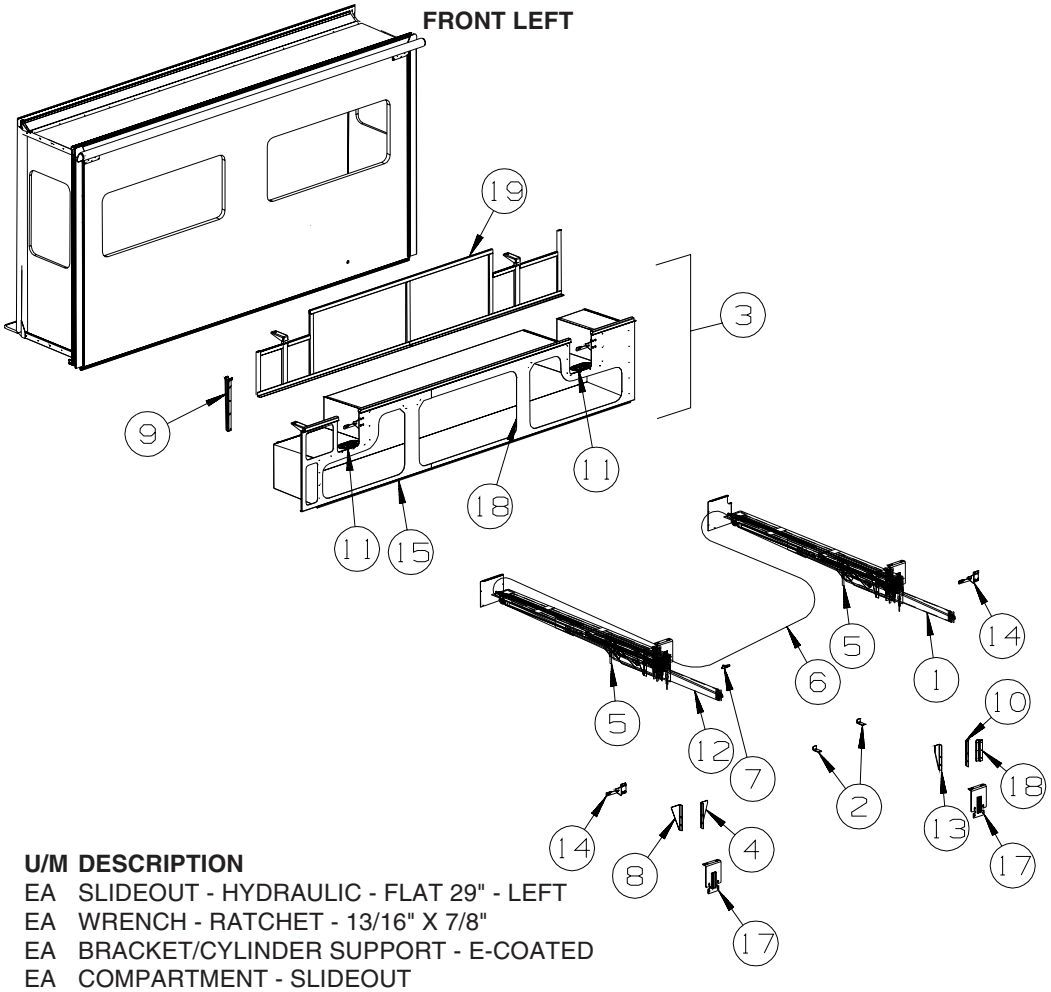

KEY	PART NUMBER	U/M	DESCRIPTION
1*	152314-01-000	EA	SLIDEOUT - HYDRAULIC - FLAT 29" - LEFT
	143738-01-000	EA	WRENCH - RATCHET - 13/16" X 7/8"
2	122922-02-02B	EA	BRACKET/CYLINDER SUPPORT - E-COATED
3	152647-06-T77	EA	COMPARTMENT - SLIDEOUT
4	131531-03-02B	EA	GUSSET - SLIDEOUT - E-COATED
5	151323-01-000	EA	BOLT - HANGER/STOREMORE - SHORT/3.25"X1/2"THREAD - AP31951 FROM: 00-00-00 THRU: 07-10-05
5	151323-02-000	EA	BOLT - HANGER/STOREMORE - LONG/4.5"X1/2" THREAD - AP31952 FROM: 07-11-05 THRU: 99-99-99
6*	100536-58-000	EA	HOSE KIT - F/SLIDEOUT
7	123264-01-000	EA	TEE - UNION - 1/4" X 1/4" X 1/4"
8	131531-02-02B	EA	GUSSET - SLIDEOUT - E-COATED
9	126591-02-02B	EA	CARRIER - WIRE LOOM - F/SLIDEOUT ROOM - E-COATED
10	131531-07-02B	EA	GUSSET - SLIDEOUT - E-COATED
11	148331-01-01A	EA	PLUG - OVAL/LARGE - BLACK
12*	143625-03-000	EA	SYCRONIZING CYLINDER KIT
13	131531-09-02B	EA	GUSSET - SLIDEOUT - E-COATED
14	143183-01-02B	EA	BRACKET - SLIDEOUT COMPARTMENT - E-COATED
15	126516-01-01A	FT	TRIM - VINYL/EXTRUDED - 8'
16	116104-06-02B	EA	BRACKET - ZEE W/HOLES - 7.9" - E-COATED
17	131529-01-02B	EA	BRACKET - MOUNTING - F/SLIDEOUT COMPARTMENT - E-COATED FROM: 00-00-00 THRU: 07-10-05
17	152144-01-02B	EA	BRACKET - SLIDEOUT MOUNT - E-COATED FROM: 07-11-05 THRU: 99-99-99
18	152648-06-02B	EA	SEAL PLANE - SLIDEOUT - E-COATED
19	152649-06-02B	EA	SUPPORT - SLIDEOUT COMPARTMENT - E-COATED

***COMPONENT PARTS LISTED LATER IN THIS GROUP**

COPYRIGHT © 2006 WINNEBAGO INDUSTRIES INC.

EXTERIOR SLIDEOUT GROUP (CONTINUED)

FRONT LEFT (CONTINUED)

NOTICE

BRIGHT WHITE TRIMS WERE USED FROM: 00-00-00 THRU: 06-12-05 ON ALL COLOR CODES
ALMOND TRIMS WERE USED FROM: 06-13-05 THRU: 99-99-99 ON ALL COLOR CODES

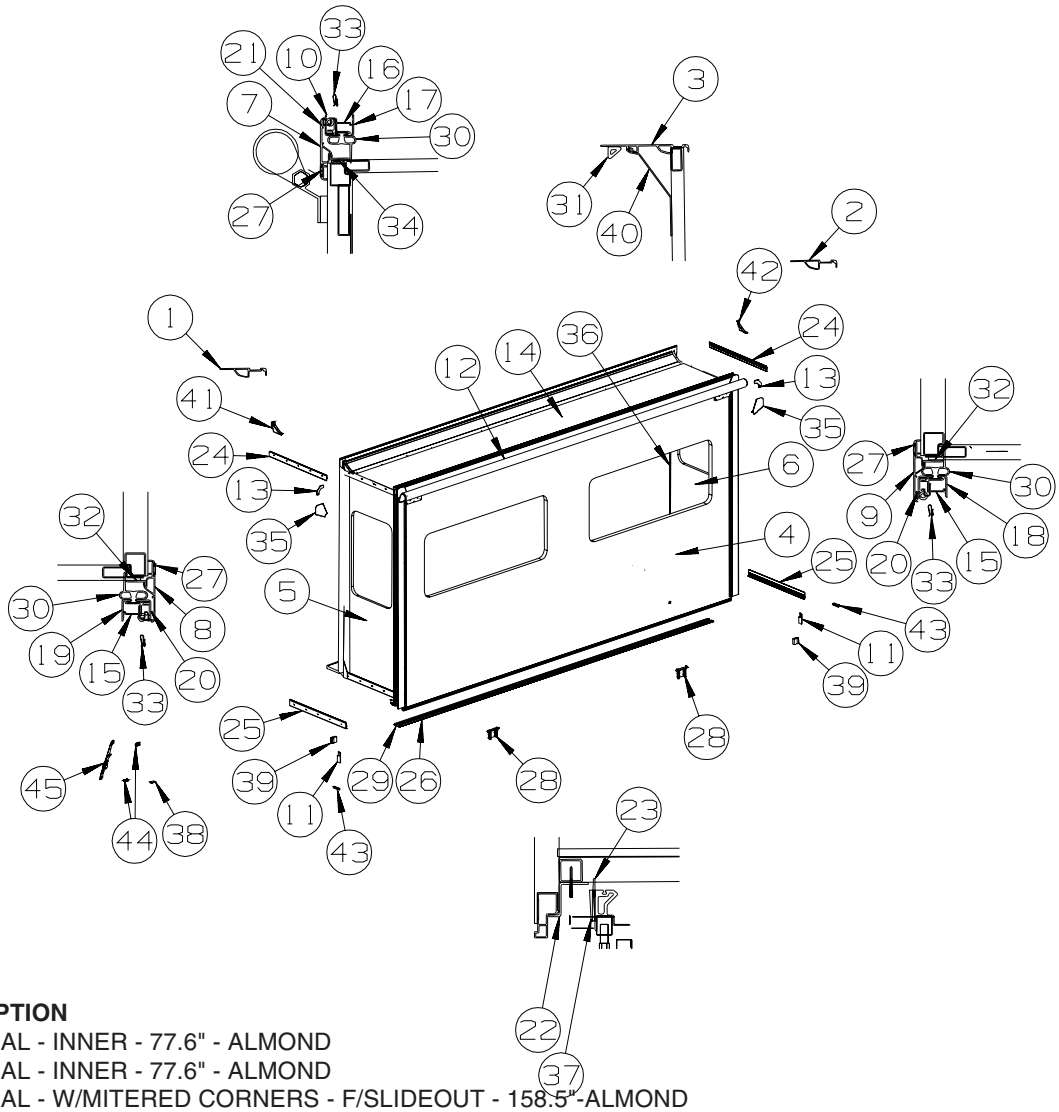

KEY	PART NUMBER	U/M	DESCRIPTION
1	139624-39-02A	EA	TRIM/SEAL - INNER - 77.6" - ALMOND
2	139624-40-02A	EA	TRIM/SEAL - INNER - 77.6" - ALMOND
3	148916-01-02A	EA	TRIM/SEAL - W/MITERED CORNERS - F/SLIDEOUT - 158.5"-ALMOND
4	154958-11-T77	EA	SLUG - F/SLIDEOUT (T89, T90, T91, T92)
4	154958-11-T81	EA	SLUG - F/SLIDEOUT (T93, T94, T95, T96)
4	154958-11-T85	EA	SLUG - F/SLIDEOUT (T97, T98, T99, T00)
4	154958-12-T77	EA	SLUG - F/SLIDEOUT (T89, T90, T91, T92) - DINING TABLE/CHAIRS
4	154958-12-T81	EA	SLUG - F/SLIDEOUT (T93, T94, T95, T96) - DINING TABLE/CHAIRS
4	154958-12-T85	EA	SLUG - F/SLIDEOUT (T97, T98, T99, T00) - DINING TABLE/CHAIRS
5	152610-01-T77	EA	PANEL END - F/SLIDEOUT (T89, T90, T91, T92)
5	152610-01-T81	EA	PANEL END - F/SLIDEOUT (T93, T94, T95, T96)
5	152610-01-T85	EA	PANEL END - F/SLIDEOUT (T97, T98, T99, T00)
6	152611-02-T77	EA	PANEL END - F/SLIDEOUT (T89, T90, T91, T92)
6	152611-02-T81	EA	PANEL END - F/SLIDEOUT (T93, T94, T95, T96)
6	152611-02-T85	EA	PANEL END - F/SLIDEOUT (T97, T98, T99, T00)
6	152611-03-T77	EA	PANEL END - F/SLIDEOUT (T93, T94, T95, T96) - DINING TABLE/CHAIRS
6	152611-03-T81	EA	PANEL END - F/SLIDEOUT (T93, T94, T95, T96) - DINING TABLE/CHAIRS
6	152611-03-T85	EA	PANEL END - F/SLIDEOUT (T97, T98, T99, T00) - DINING TABLE/CHAIRS
7	139625-10-01A	EA	TRIM/SEAL - W/MITERED ENDS - 160.2" - BRIGHT WHITE - NOT ILLUSTRATED FROM: 00-00-00 THRU: 11-27-05
7	156417-08-01A	EA	TRIM/SEAL - W/MITERED ENDS - 156.5" - BRIGHT WHITE FROM: 11-28-05 THRU: 99-99-99
7	139625-10-02A	EA	TRIM/SEAL - W/MITERED ENDS - 160.2" - BLACK - FULL BODY PAINT - NOT ILLUSTRATED FROM: 00-00-00 THRU: 11-27-05
7	156417-08-02A	EA	TRIM/SEAL - W/MITERED ENDS - 156.5" - BLACK - FULL BODY PAINT FROM: 11-28-05 THRU: 99-99-99

COPYRIGHT © 2006 WINNEBAGO INDUSTRIES INC.

EXTERIOR SLIDEOUT GROUP (CONTINUED)

FRONT LEFT (CONTINUED)

KEY	PART NUMBER	U/M	DESCRIPTION
8	139625-51-01A	EA	TRIM/SEAL - W/MITERED ENDS - 82.2" - BRIGHT WHITE - NOT ILLUSTRATED FROM: 00-00-00 THRU: 11-27-05
8	156417-28-01A	EA	TRIM/SEAL - W/MITERED ENDS - 80.4" - BRIGHT WHITE FROM: 11-28-05 THRU: 99-99-99
8	139625-51-02A	EA	TRIM/SEAL - W/MITERED ENDS - 82.2" - BLACK- FULL BODY PAINT - NOT ILLUSTRATED FROM: 00-00-00 THRU: 11-27-05
8	156417-28-02A	EA	TRIM/SEAL - W/MITERED ENDS - 80.4" - BLACK- FULL BODY PAINT FROM: 11-28-05 THRU: 99-99-99
9	139625-52-01A	EA	TRIM/SEAL - W/MITERED ENDS - 82.1" - BRIGHT WHITE - NOT ILLUSTRATED FROM: 00-00-00 THRU: 11-27-05
9	156417-29-01A	EA	TRIM/SEAL - W/MITERED ENDS - 80.4" - BRIGHT WHITE FROM: 11-28-05 THRU: 99-99-99
9	139625-52-02A	EA	TRIM/SEAL - W/MITERED ENDS - 82.1" - BLACK - FULL BODY PAINT - NOT ILLUSTRATED FROM: 00-00-00 THRU: 11-27-05
9	156417-29-02A	EA	TRIM/SEAL - W/MITERED ENDS - 80.4" - BLACK - FULL BODY PAINT FROM: 11-28-05 THRU: 99-99-99
10	099418-01-000	FT	SEAL - D-SECTION/ADHESIVE BACK - .44" X .44" - BLK RUBBER - NOT ILLUSTRATED FROM: 00-00-00 THRU: 02-08-06
10	158297-01-000	FT	SEAL - D-SECTION/BULB/TEE - ADHESIVE BACK - BLACK FROM: 02-09-06 THRU: 99-99-99
11	126546-01-02A	EA	COVER - END/SIDEWALL/SLIDEOUT - BRIGHT WHITE - NOT ILLUSTRATED FROM: 00-00-00 THRU: 08-21-05
11	126546-03-02A	EA	COVER - END/SIDEWALL - BRIGHT WHITE FROM: 08-22-05 THRU: 99-99-99
11	126546-01-03A	EA	COVER - END/SIDEWALL/SLIDEOUT - BLACK - FULL BODY PAINT - NOT ILLUSTRATED FROM: 00-00-00 THRU: 08-21-05
11	126546-03-03A	EA	COVER - END/SIDEWALL - BLACK - FULL BODY PAINT FROM: 08-22-05 THRU: 99-99-99
12	122977-06-03A	EA	AWNING/SLIDEOUT W/COVER - 160.24" - WHITE - VINYL/VINYL WRAP
12	122977-06-06A	EA	AWNING/SLIDEOUT W/COVER - 160.24" - VINYL WRAP/CHAMPAGNE - FULL BODY PAINT
13	116444-04-12B	EA	TRIM/KEY CORNER - SLIDEOUT - 3.1" X 3.1" - BRT WHITE - NOT ILLUSTRATED FROM: 00-00-00 THRU: 11-27-05
13	156416-01-12B	EA	BRACKET - CORNER TRIM/SLIDEOUT - 3.1"X 3.1" - BRIGHT WHITE FROM: 11-28-05 THRU: 99-99-99
13	116444-04-02B	EA	TRIM/KEY CORNER - SLIDEOUT - 3.1" X 3.1" - E-COATED - FULL BODY PAINT - NOT ILLUSTRATED FROM: 00-00-00 THRU: 11-27-05
13	156416-01-02B	EA	BRACKET - CORNER TRIM/SLIDEOUT - 3.1"X 3.1" - E-COATED - FULL BODY PAINT FROM: 11-28-05 THRU: 99-99-99
14	155780-01-T77	EA	ROOF - F/SLIDEOUT
15	142718-38-01A	EA	RETAINER - SIDEWALL/SLIDEOUT - 79"
16	142718-09-01A	EA	RETAINER - SIDEWALL/SLIDEOUT - 157.6"
17	142719-11-01A	EA	TRIM/SIDEWALL - TOP/SLIDEOUT - 159.5" - BRIGHT WHITE - NOT ILLUSTRATED
17	142719-11-02A	EA	TRIM/SIDEWALL - TOP/SLIDEOUT - 159.5" - ALMOND - NOT ILLUSTRATED FROM: 06-13-05 THRU: 11-27-05
17	151761-04-02A	EA	TRIM - SIDEWALL/SLIDEOUT/TOP - 159.5" - ALMOND FROM: 11-28-05 THRU: 99-99-99
18	142720-19-01A	EA	TRIM - SIDEWALL/SLIDEOUT - 81.1" - BRIGHT WHITE - NOT ILLUSTRATED
18	142720-19-02A	EA	TRIM - SIDEWALL/SLIDEOUT - 81.1" - ALMOND - NOT ILLUSTRATED FROM: 06-13-05 THRU: 11-27-05
18	151760-23-02A	EA	TRIM - SIDEWALL/SLIDEOUT - 81.1" - ALMOND FROM: 11-28-05 THRU: 99-99-99
19	142720-18-01A	EA	TRIM - SIDEWALL/SLIDEOUT - 81.1" - BRIGHT WHITE - NOT ILLUSTRATED
19	142720-18-02A	EA	TRIM - SIDEWALL/SLIDEOUT - 81.1" - ALMOND - NOT ILLUSTRATED FROM: 06-13-05 THRU: 11-27-05
19	151760-22-02A	EA	TRIM - SIDEWALL/SLIDEOUT - 81.1" - ALMOND FROM: 11-28-05 THRU: 99-99-99
20	136824-49-01A	EA	TRIM - SIDEWALL/SLIDEOUT - 80.9" - BRIGHT WHITE
20	136824-49-02A	EA	TRIM - SIDEWALL/SLIDEOUT - 80.9" - BLACK - FULL BODY PAINT
21	136824-11-01A	EA	TRIM - SIDEWALL/SLIDEOUT - 159.8" - BRIGHT WHITE
21	136824-11-02A	EA	TRIM - SIDEWALL/SLIDEOUT - 159.8" - BLACK - FULL BODY PAINT
22	131520-17-01A	EA	EXTRUSION/ZEE - F/SLIDEOUT - 150.6” - MILL
23	123012-01-000	FT	SEAL - SLIDEOUT - .09"/.13" THICK X 1.25" - W/ADHESIVE

COPYRIGHT © 2006 WINNEBAGO INDUSTRIES INC.

EXTERIOR SLIDEOUT GROUP (CONTINUED)

FRONT LEFT (CONTINUED)

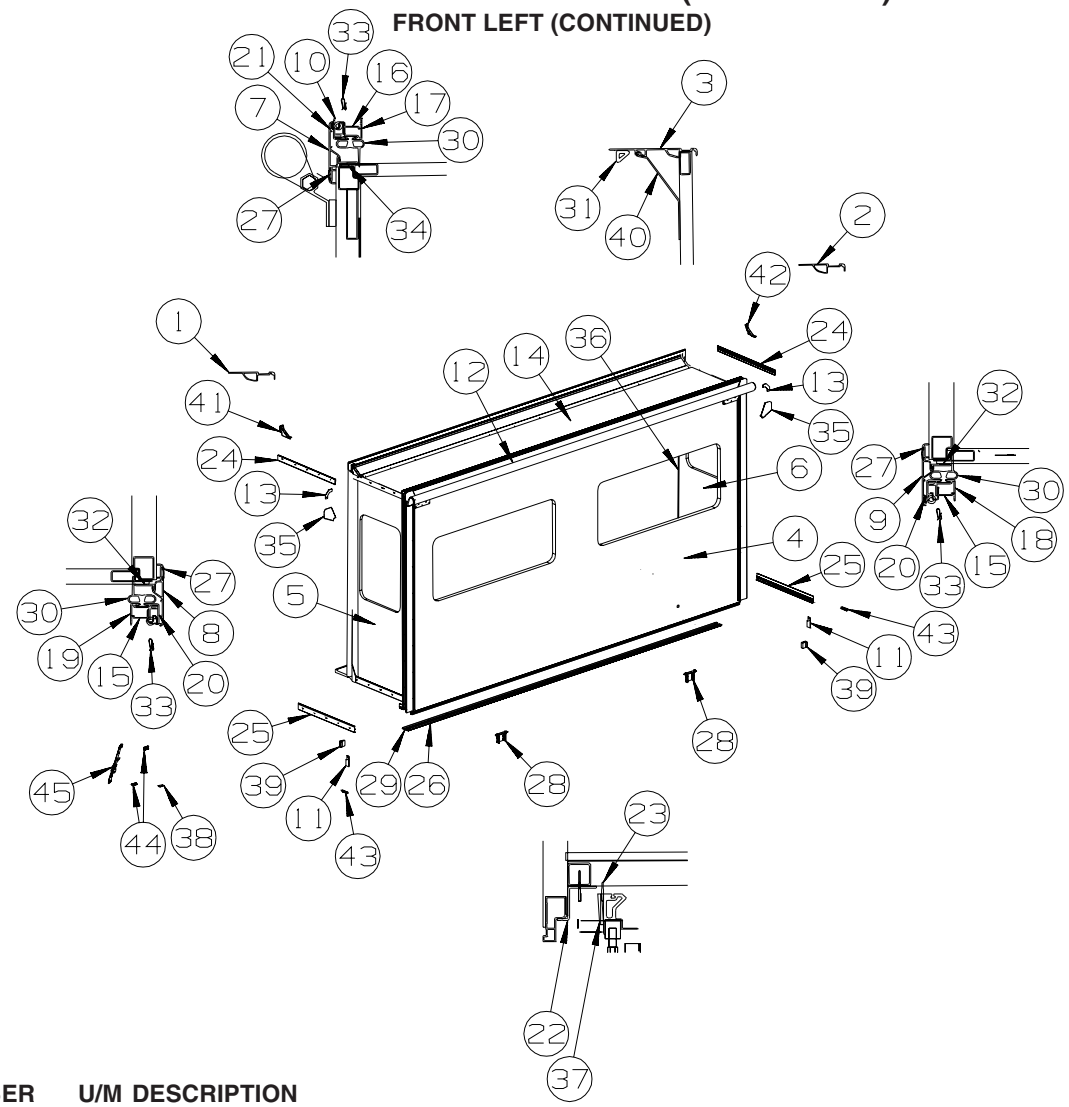

KEY	PART NUMBER	U/M	DESCRIPTION
24	138659-01-01A	EA	TRIM/FEATURE STRIP - 181.7" - BRIGHT WHITE - NOT ILLUSTRATED FROM: 00-00-00 THRU: 11-27-05
24	158375-01-01A	EA	TRIM - FEATURE STRIP - 29.6" - BRIGHT WHITE FROM: 11-28-05 THRU: 99-99-99
24	138659-01-02A	EA	TRIM/FEATURE STRIP - 181.7" - BLACK - FULL BODY PAINT - NOT ILLUSTRATED FROM: 00-00-00 THRU: 11-27-05
24	158375-01-02A	EA	TRIM - FEATURE STRIP - 29.6" - BLACK- FULL BODY PAINT FROM: 11-28-05 THRU: 99-99-99
25	125051-03-01A	EA	TRIM - FEATURE STRIP/LOWER - 29.3" - BRIGHT WHITE - NOT ILLUSTRATED FROM: 00-00-00 THRU: 11-27-05
25	158030-02-01A	EA	TRIM - FEATURE - LOWER - 2.3" X 29.1" - BRIGHT WHITE FROM: 11-28-05 THRU: 99-99-99
25	125051-03-02A	EA	TRIM - FEATURE STRIP/LOWER - 29.3" - BLACK - FULL BODY PAINT - NOT ILLUSTRATED FROM: 00-00-00 THRU: 11-27-05
25	158030-02-02A	EA	TRIM - FEATURE - LOWER - 2.3" X 29.1" - BLACK - FULL BODY PAINT FROM: 11-28-05 THRU: 99-99-99
26	115325-01-02A	EA	RAIL - FLOOR/SLIDEOUT ROOM - 147.2” LONG - BLACK
27	105312-01-07A	FT	INSERT - FEATURE STRIP - VINYL - BRIGHT WHITE
27	105312-01-13A	FT	INSERT - FEATURE STRIP - VINYL - BLACK - FULL BODY PAINT
28	133233-01-02B	EA	BRACKET - SLIDEOUT - E-COATED
29	115661-01-000	FT	SHOE/GLIDE - SLIDEOUT ROOM - 1/16" X 3" - POLYETHYLENE
30	136978-01-01A	FT	SEAL - SLIDEOUT - SINGLE WIPE LIP - BLACK
31	146056-01-000	FT	SEAL - TRIANGLE - W/PSA

COPYRIGHT © 2006 WINNEBAGO INDUSTRIES INC.

EXTERIOR SLIDEOUT GROUP (CONTINUED)

FRONT LEFT (CONTINUED)

KEY	PART NUMBER	U/M	DESCRIPTION
32	133954-61-01A	EA	TRIM/SEAL - 75.8" - BRIGHT WHITE - NOT ILLUSTRATED
			FROM: 00-00-00 THRU: 05-30-05
32	133954-66-01A	EA	TRIM/SEAL - 75.8" - BRIGHT WHITE
			FROM: 05-31-05 THRU: 99-99-99
32	133954-61-02A	EA	TRIM/SEAL - 75.8" - BLACK - FULL BODY PAINT - NOT ILLUSTRATED
			FROM: 00-00-00 THRU: 05-30-05
32	133954-66-02A	EA	TRIM/SEAL - 75.8" - BLACK - FULL BODY PAINT
			FROM: 05-31-05 THRU: 99-99-99
33	142549-01-000	EA	CLIP - “S” TYPE
34	133954-01-01A	EA	TRIM/SEAL - 154.3” - BRIGHT WHITE
34	133954-01-02A	EA	TRIM/SEAL - 154.3” - BLACK - FULL BODY PAINT
35	156151-01-02A	EA	PROTECTOR - CORNER - SLIDEOUT - BRIGHT WHITE
			FROM: 11-28-05 THRU: 99-99-99
35	156151-01-01A	EA	PROTECTOR - CORNER - SLIDEOUT - BLACK - FULL BODY PAINT
			FROM: 11-28-05 THRU: 99-99-99
36	093681-39-01A	FT	FILM - 3.1" - MATTE BLACK - FULL BODY PAINT
37	137343-01-02B	EA	PLATE - W/HOLES - E-COATED
38	135622-01-02B	EA	PLATE - TIEDOWN - SLIDEOUT ROOM
39	137408-02-000	EA	SEAL - BLOCK - F/SLIDEOUT - 1.4"
40	148915-01-01A	EA	RETAINER/TRIM - 154.3" - BRIGHT WHITE
40	148915-01-02A	EA	RETAINER/TRIM - 154.3" - BLACK - FULL BODY PAINT
41	150647-01-02A	EA	COVER/TRIM - RH - F/SLIDEOUT - BRIGHT WHITE
41	150647-01-01A	EA	COVER/TRIM - RH - F/SLIDEOUT - BLACK - FULL BODY PAINT
42	150647-02-02A	EA	COVER/TRIM - LH - F/SLIDEOUT - BRIGHT WHITE
42	150647-02-01A	EA	COVER/TRIM - LH - F/SLIDEOUT - BLACK - FULL BODY PAINT
43	151258-01-000	FT	SEAL - FOAM/WIPE - CLOSED CELL
44	135619-02-01A	EA	PLATE - TIEDOWN - SLIDEOUT ROOM
45	135619-01-01A	EA	STRAP - TIEDOWN - SLIDEOUT ROOM
	157809-01-01A	EA	SEAL - FOAM BLOCK/RIGHT SIDE - ADHESIVE BACK
			FROM: 11-28-05 THRU: 02-08-06
	157809-02-01A	EA	SEAL - FOAM BLOCK/LEFT SIDE - ADHESIVE BACK
			FROM: 11-28-05 THRU: 02-08-06

COMPONENT PARTS FOR FRONT LEFT

100536-58-000

KEY	PART NUMBER	U/M	DESCRIPTION	VENDOR NO.
	100536-58-700	EA	HOSE - HYD. 1/4" X 86"	RAP91470/AP4665
	100536-58-701	EA	HOSE - HYDRAULIC 1/4" X 74"	RAP91467/AP5616

143625-03-000

KEY	PART NUMBER	U/M	DESCRIPTION	VENDOR NO.
	100536-44-700	EA	HOSE-HYDRAULIC - 1/8" X 172"	AP24649
	131360-01-701	EA	HOSE-HYDRAULIC-1/4" X 125"	AP4906
	132540-01-701	EA	CYLINDER - SYNCRONIZING	RAP90690/AP17966

152314-01-000, 152314-02-000

KEY	PART NUMBER	U/M	DESCRIPTION	VENDOR NO.
	143625-01-702	EA	SUPPORT KIT - ROOM ADJUSTER	RAP91600
	145494-02-704	EA	RAM/CYLINDER - SLIDEOUT ROOM	RAP91371/AP28614
	152314-01-700	EA	BEARING PAD - SLIDE RAIL	RAP91028

COPYRIGHT © 2006 WINNEBAGO INDUSTRIES INC.

EXTERIOR SLIDEOUT GROUP (CONTINUED)

RIGHT REAR

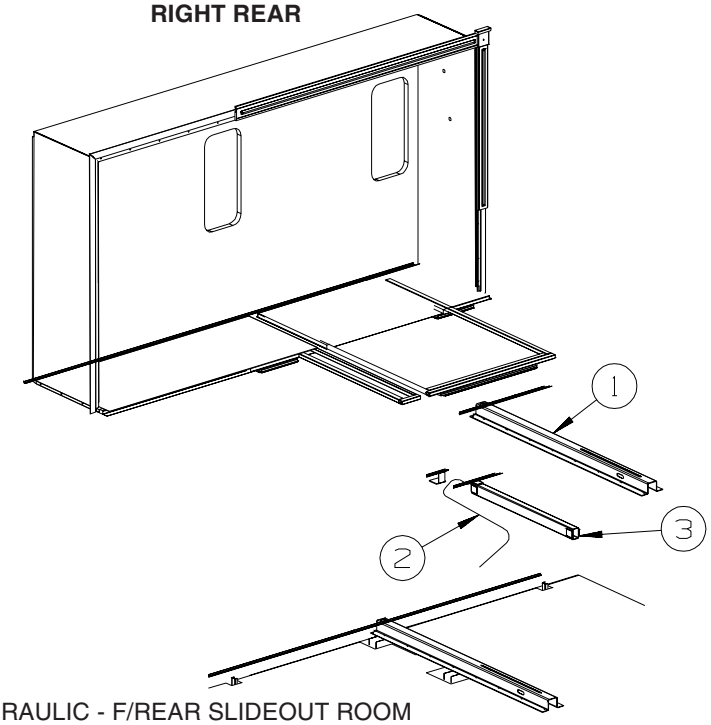

KEY	PART NUMBER	U/M	DESCRIPTION
1*	128599-05-000	EA	SLIDEOUT - HYDRAULIC - F/REAR SLIDEOUT ROOM
2*	100536-59-000	EA	HOSE KIT - F/SLIDEOUT
3*	128599-02-000	EA	CHANNEL - F/SLIDEOUT

***COMPONENT PARTS LISTED LATER IN THIS GROUP**

COPYRIGHT © 2006 WINNEBAGO INDUSTRIES INC.

EXTERIOR SLIDEOUT GROUP (CONTINUED)

RIGHT REAR (CONTINUED)

NOTICE

BRIGHT WHITE TRIMS WERE USED FROM: 00-00-00 THRU: 06-12-05 ON ALL COLOR CODES
ALMOND TRIMS WERE USED FROM: 06-13-05 THRU: 99-99-99 ON ALL COLOR CODES

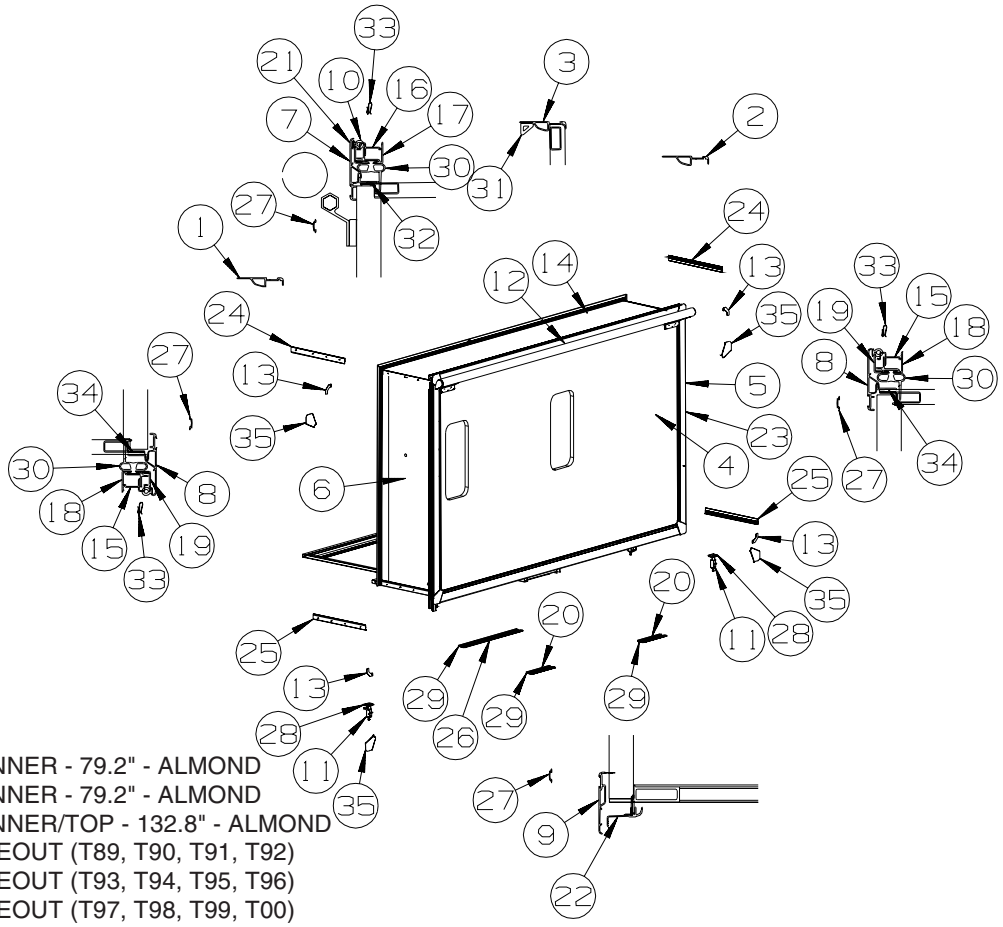

KEY	PART NUMBER	U/M	DESCRIPTION
1	139624-41-02A	EA	TRIM/SEAL - INNER - 79.2" - ALMOND
2	139624-42-02A	EA	TRIM/SEAL - INNER - 79.2" - ALMOND
3	139624-12-02A	EA	TRIM/SEAL - INNER/TOP - 132.8" - ALMOND
4	154959-11-T77	EA	SLUG - F/SLIDEOUT (T89, T90, T91, T92)
4	154959-11-T81	EA	SLUG - F/SLIDEOUT (T93, T94, T95, T96)
4	154959-11-T85	EA	SLUG - F/SLIDEOUT (T97, T98, T99, T00)
5	155750-01-T77	EA	PANEL END - F/SLIDEOUT (T89, T90, T91, T92)
5	155750-01-T81	EA	PANEL END - F/SLIDEOUT (T93, T94, T95, T96)
5	155750-01-T85	EA	PANEL END - F/SLIDEOUT (T97, T98, T99, T00)
6	155749-01-T77	EA	PANEL END - F/SLIDEOUT (T89, T90, T91, T92)
6	155749-01-T81	EA	PANEL END - F/SLIDEOUT (T93, T94, T95, T96)
6	155749-01-T85	EA	PANEL END - F/SLIDEOUT (T97, T98, T99, T00)
7	139625-12-01A	EA	TRIM/SEAL - W/MITERED ENDS - 134.6" - BRIGHT WHITE - NOT ILLUSTRATED FROM: 00-00-00 THRU: 11-27-05
7	156417-10-01A	EA	TRIM/SEAL - W/MITERED ENDS - 131.2" - BRIGHT WHITE FROM: 11-28-05 THRU: 99-99-99
7	139625-12-02A	EA	TRIM/SEAL - W/MITERED ENDS - 134.6" - BLACK - FULL BODY PAINT - NOT ILLUSTRATED FROM: 00-00-00 THRU: 11-27-05
7	156417-10-02A	EA	TRIM/SEAL - W/MITERED ENDS - 131.2" - BLACK - FULL BODY PAINT FROM: 11-28-05 THRU: 99-99-99
8	139625-53-01A	EA	TRIM/SEAL - W/MITERED ENDS - 82" - BRIGHT WHITE - NOT ILLUSTRATED FROM: 00-00-00 THRU: 11-27-05
8	156417-30-01A	EA	TRIM/SEAL - W/MITERED ENDS - 78.6" - BRIGHT WHITE FROM: 11-28-05 THRU: 99-99-99
8	139625-53-02A	EA	TRIM/SEAL - W/MITERED ENDS - 82" - BLACK - FULL BODY PAINT - NOT ILLUSTRATED FROM: 00-00-00 THRU: 11-27-05
8	156417-30-02A	EA	TRIM/SEAL - W/MITERED ENDS - 78.6" - BLACK - FULL BODY PAINT FROM: 11-28-05 THRU: 99-99-99
9	142233-05-01A	EA	TRIM/SEAL - W/MITERED ENDS - 134.8" - BRIGHT WHITE - NOT ILLUSTRATED FROM: 00-00-00 THRU: 11-27-05
9	142233-28-01A	EA	TRIM/SEAL - W/MITERED ENDS - 131.2" - BRIGHT WHITE FROM: 11-28-05 THRU: 99-99-99
9	142233-05-02A	EA	TRIM/SEAL - W/MITERED ENDS - 134.8" - BLACK - FULL BODY PAINT - NOT ILLUSTRATED FROM: 00-00-00 THRU: 11-27-05
9	142233-28-02A	EA	TRIM/SEAL - W/MITERED ENDS - 131.2" - BLACK - FULL BODY PAINT FROM: 11-28-05 THRU: 99-99-99

COPYRIGHT © 2006 WINNEBAGO INDUSTRIES INC.

EXTERIOR SLIDEOUT GROUP (CONTINUED)

RIGHT REAR (CONTINUED)

KEY	PART NUMBER	U/M	DESCRIPTION
10	099418-01-000	FT	SEAL - D-SECTION/ADHESIVE BACK - .44" X .44" - BLK RUBBER - NOT ILLUSTRATED
			FROM: 00-00-00 THRU: 02-08-06
10	158297-01-000	FT	SEAL - D-SECTION/BULB/TEE - ADHESIVE BACK - BLACK
			FROM: 02-09-06 THRU: 99-99-99
11	126313-10-02B	EA	SUPPORT - ROLLER - SLIDE-OUT ROOM - E-COATED
12	122977-08-03A	EA	AWNING/SLIDEOUT W/COVER - 134.4" - WHITE -VINYL/VINYL WRAP
12	122977-08-06A	EA	AWNING/SLIDEOUT W/COVER - 134.4" - VINYL WRAP/CHAMPAGNE - FULL BODY PAINT
13	116444-04-12B	EA	TRIM/KEY CORNER - SLIDEOUT - 3.1" X 3.1" - BRT WHITE - NOT ILLUSTRATED
			FROM: 00-00-00 THRU: 11-27-05
13	156416-01-12B	EA	BRACKET - CORNER TRIM/SLIDEOUT - 3.1"X 3.1" - BRIGHT WHITE
			FROM: 00-00-00 THRU: 11-27-05
13	116444-04-02B	EA	TRIM/KEY CORNER - SLIDEOUT - 3.1" X 3.1" - E-COATED - FULL BODY PAINT - NOT ILLUSTRATED
			FROM: 00-00-00 THRU: 11-27-05
13	156416-01-02B	EA	BRACKET - CORNER TRIM/SLIDEOUT - 3.1"X 3.1" - E-COATED - FULL BODY PAINT
			FROM: 00-00-00 THRU: 11-27-05
14	155772-01-T77	EA	ROOF - F/SLIDEOUT
15	142718-38-01A	EA	RETAINER - SIDEWALL/SLIDEOUT - 79"
16	142718-04-01A	EA	RETAINER - SIDEWALL/SLIDEOUT - 129.9" - MILL
17	142719-04-01A	EA	TRIM/SIDEWALL - TOP/SLIDEOUT - 134.3" - BRIGHT WHITE - NOT ILLUSTRATED
17	142719-04-02A	EA	TRIM/SIDEWALL - TOP/SLIDEOUT - 134.3" - ALMOND - NOT ILLUSTRATED
			FROM: 00-00-00 THRU: 10-09-05
17	151761-12-02A	EA	TRIM - SIDEWALL/SLIDEOUT/TOP - 134.2" - ALMOND
			FROM: 10-10-05 THRU: 99-99-99
18	142720-20-01A	EA	TRIM - SIDEWALL/SLIDEOUT - 79.2" - BRIGHT WHITE - NOT ILLUSTRATED
18	142720-20-02A	EA	TRIM - SIDEWALL/SLIDEOUT - 79.2" - ALMOND - NOT ILLUSTRATED
			FROM: 00-00-00 THRU: 10-09-05
18	151760-24-02A	EA	TRIM - SIDEWALL/SLIDEOUT - 78.6" - ALMOND
			FROM: 10-10-05 THRU: 99-99-99
19	136824-50-01A	EA	TRIM - SIDEWALL/SLIDEOUT - 79.2" - BRIGHT WHITE
19	136824-50-02A	EA	TRIM - SIDEWALL/SLIDEOUT - 79.2" - BLACK - FULL BODY PAINT
20	115325-08-01A	EA	RAIL - FLOOR/SLIDEOUT ROOM - 12” LONG - BLACK
21	136824-10-01A	EA	TRIM - SIDEWALL/SLIDEOUT - 134.3" - BRIGHT WHITE
21	136824-10-02A	EA	TRIM - SIDEWALL/SLIDEOUT - 134.3" - BLACK - FULL BODY PAINT
22	145054-05-P45	EA	TRIM/ZEE - W/SEAL - SLIDEOUT/LOWER - 133.8" - BRIGHT WHITE - NOT ILLUSTRATED
			FROM: 00-00-00 THRU: 10-09-05
	141174-04-02A	EA	TRIM/ZEE - SIDEWALL - 134.4” - BRIGHT WHITE - NOT ILLUSTRATED
			FROM: 00-00-00 THRU: 10-09-05
	149821-04-02A	EA	TRIM/ANGLE - SIDEWALL - BRIGHT WHITE - 1/2” X 1/2” X 130.7” - NOT ILLUSTRATED
			FROM: 00-00-00 THRU: 10-09-05
	123012-01-000	FT	SEAL - SLIDEOUT - .09"/.13" THICK X 1.3" - W/ADHESIVE - NOT ILLUSTRATED
			FROM: 00-00-00 THRU: 10-09-05
22	157584-05-AA2	EA	TRIM/ZEE - W/SEAL/END CAPS - SLIDEOUT/LOWER-133.6"-BRT WHT
			FROM: 10-10-05 THRU: 99-99-99
22	145054-05-AA1	EA	TRIM/ZEE - W/SEAL - SLIDEOUT/LOWER - 133.8" - BLACK - FULL BODY PAINT - NOT ILLUSTRATED
			FROM: 00-00-00 THRU: 10-09-05
	141174-04-03A	EA	TRIM/ZEE - SIDEWALL - 134.4” - BLACK - FULL BODY PAINT - NOT ILLUSTRATED
			FROM: 00-00-00 THRU: 10-09-05
	149821-04-01A	EA	TRIM/ANGLE - SIDEWALL - BLACK - 1/2” X 1/2” X 130.7” - FULL BODY PAINT - NOT ILLUSTRATED
			FROM: 00-00-00 THRU: 10-09-05
	123012-01-000	FT	SEAL - SLIDEOUT - .09"/.13" THICK X 1.3" - W/ADHESIVE - NOT ILLUSTRATED
			FROM: 00-00-00 THRU: 10-09-05
22	157584-05-AA1	EA	TRIM/ZEE - W/SEAL/END CAPS - SLIDEOUT/LOWER-133.6"- BLACK - FULL BODY PAINT
			FROM: 10-10-05 THRU: 99-99-99
23	093681-39-01A	FT	FILM - 3.1" - MATTE BLACK - FULL BODY PAINT
24	138659-01-01A	EA	TRIM/FEATURE STRIP - 181.7" - BRIGHT WHITE - NOT ILLUSTRATED
			FROM: 00-00-00 THRU: 11-27-05
24	158375-01-01A	EA	TRIM - FEATURE - UPPER - 181.7" - BRIGHT WHITE - NOT ILLUSTRATED
			FROM: 11-28-05 THRU: 01-08-06
24	158375-04-01A	EA	TRIM - FEATURE STRIP - 24.6" - BRIGHT WHITE
			FROM: 01-09-06 THRU: 99-99-99
24	138659-01-02A	EA	TRIM/FEATURE STRIP - 181.7" - BLACK - FULL BODY PAINT - NOT ILLUSTRATED
			FROM: 00-00-00 THRU: 11-27-05
24	158375-01-02A	EA	TRIM - FEATURE - UPPER - 181.7" - BLACK - FULL BODY PAINT - NOT ILLUSTRATED
			FROM: 11-28-05 THRU: 01-08-06

COPYRIGHT © 2006 WINNEBAGO INDUSTRIES INC.

EXTERIOR SLIDEOUT GROUP (CONTINUED)

RIGHT REAR (CONTINUED)

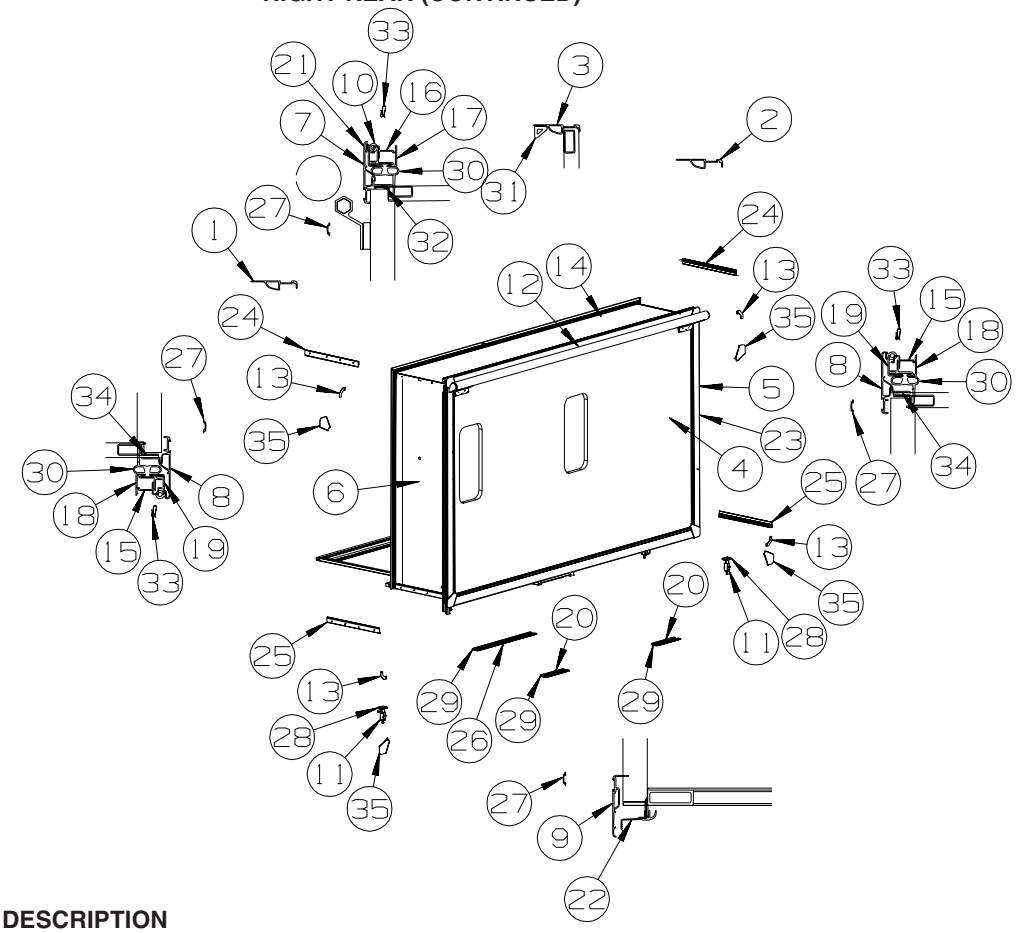

KEY	PART NUMBER	U/M	DESCRIPTION
24	158375-04-02A	EA	TRIM - FEATURE STRIP - 24.6" - BLACK - FULL BODY PAINT FROM: 01-09-06 THRU: 99-99-99
25	141435-04-01A	EA	TRIM - FEATURE - LOWER - 24” - BRIGHT WHITE - NOT ILLUSTRATED FROM: 00-00-00 THRU: 10-30-05
25	157385-04-01A	EA	TRIM - FEATURE - LOWER - 21.8" - BRIGHT WHITE FROM: 10-31-05 THRU: 99-99-99
25	141435-04-02A	EA	TRIM - FEATURE - LOWER - 24” - BLACK - FULL BODY PAINT - NOT ILLUSTRATED FROM: 00-00-00 THRU: 10-30-05
25	157385-04-02A	EA	TRIM - FEATURE - LOWER - 21.8" - BLACK - FULL BODY PAINT FROM: 10-31-05 THRU: 99-99-99
26	115325-11-01A	EA	RAIL - FLOOR/SLIDEOUT ROOM - 30.7” LONG - BLACK
27	105312-01-07A	FT	INSERT - FEATURE STRIP - VINYL - BRIGHT WHITE
27	105312-01-13A	FT	INSERT - FEATURE STRIP - VINYL - BLACK - FULL BODY PAINT
28	128599-03-000	EA	PAD - F/SLIDEOUT - 2” X 2.6”
29	115661-01-000	FT	SHOE/GLIDE - SLIDEOUT ROOM - 1/16" X 3" - POLYETHYLENE
30	136978-01-01A	FT	SEAL - SLIDEOUT - SINGLE WIPE LIP - BLACK
31	146056-01-000	FT	SEAL - TRIANGLE - W/PSA
32	133954-14-01A	EA	TRIM/SEAL - 129.3" - BRIGHT WHITE
32	133954-14-02A	EA	TRIM/SEAL - 129.3" - BLACK - FULL BODY PAINT
33	142549-01-000	EA	CLIP - “S” TYPE
34	133954-62-01A	EA	TRIM/SEAL - 75.1" - BRIGHT WHITE
34	133954-62-02A	EA	TRIM/SEAL - 75.1" - BLACK - FULL BODY PAINT
35	135275-01-01A	EA	PROTECTOR - CORNER - SLIDEOUT - WHITE - NOT ILLUSTRATED FROM: 00-00-00 THRU: 11-27-05
35	156151-01-02A	EA	PROTECTOR - CORNER - SLIDEOUT - BRIGHT WHITE FROM: 11-28-05 THRU: 99-99-99
35	156151-01-01A	EA	PROTECTOR - CORNER - SLIDEOUT - BLACK - FULL BODY PAINT FROM: 11-28-05 THRU: 99-99-99
	157809-01-01A	EA	SEAL - FOAM BLOCK/RIGHT SIDE - ADHESIVE BACK FROM: 11-28-05 THRU: 02-08-06
	157809-02-01A	EA	SEAL - FOAM BLOCK/LEFT SIDE - ADHESIVE BACK FROM: 11-28-05 THRU: 02-08-0

COPYRIGHT © 2006 WINNEBAGO INDUSTRIES INC.

EXTERIOR SLIDEOUT GROUP (CONTINUED)

COMPONENT PARTS FOR RIGHT REAR

100536-59-000

KEY	PART NUMBER	U/M	DESCRIPTION	VENDOR NO.
	100536-27-700	EA	HOSE/HYDRAULIC - 1/4" X 332"	RAP91491/AP8985
	100536-37-701	EA	HOSE/HYDRAULIC - 1/4" X 336"	RAP5561

128599-02-000

KEY	PART NUMBER	U/M	DESCRIPTION	VENDOR NO.
	128599-06-703	EA	BEARING KIT - SLIDE-OUT TUBE	RAP90698
	128599-06-704	EA	BEARING PAD - SLIDE-OUT	P14811

128599-05-000

KEY	PART NUMBER	U/M	DESCRIPTION	VENDOR NO.
	128599-05-700	EA	RAM/CYLINDER - SLIDEOUT	RAP90688
	128599-05-701	EA	HOSE - 1/8" X 84"	AP14252
	128599-05-702	EA	HOSE - 1/8" X 72"	AP12071
	128599-05-703	EA	COVER - SLOTTED W/FOAM PAD	AP16465
	128599-05-704	EA	RAM/CYLINDER - SLIDEOUT ROOM	RAP91021
	128599-06-700	EA	HOSE/HYDRAULIC -1/8" X 72"	RAP91424/AP24635
	128599-06-701	EA	HOSE/HYDRAULIC - 1/8" X 84"	RAP91240/AP24636
	128599-06-703	EA	BEARING KIT - SLIDE-OUT TUBE	RAP90698
	137390-01-701	EA	CYLINDER NUT KIT - SLIDEOUT	RAP90947

COPYRIGHT © 2006 WINNEBAGO INDUSTRIES INC.

GENERATOR GROUP

GAS

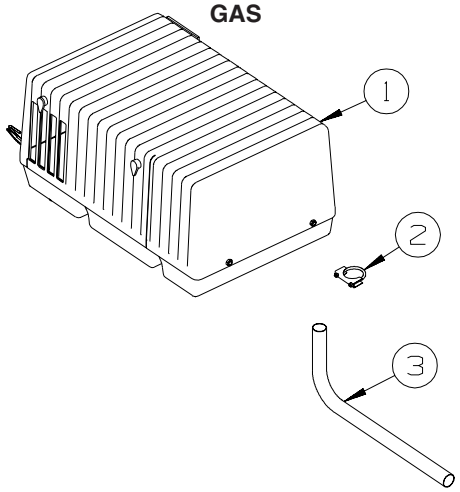

KEY	PART NUMBER	U/M	DESCRIPTION
1	135707-02-000	EA	GENERATOR - 7.0 - 30/20 - GAS - MARQUIS GOLD - 30 AMP
1	135707-01-000	EA	GENERATOR - 7.0 - 30/30 - GAS - MARQUIS GOLD - 50 AMP
1	135707-07-000	EA	GENERATOR - 5.5 - 30/20 - GAS - MARQUIS GOLD - 30 AMP
1	135707-06-000	EA	GENERATOR - 5.5 - 30/30 - GAS - MARQUIS GOLD - 50 AMP
2	007125-03-000	EA	CLAMP - MUFFLER - 1.5" DIAMETER
3	105958-27-000	EA	PIPE - EXHAUST - GENERATOR FROM: 00-00-00 THRU: 07-17-05
3	105958-33-000	EA	PIPE - EXHAUST - GENERATOR FROM: 07-18-05 THRU: 99-99-99

COPYRIGHT © 2006 WINNEBAGO INDUSTRIES INC.

HEATING & A/C GROUP

AUTOMOTIVE

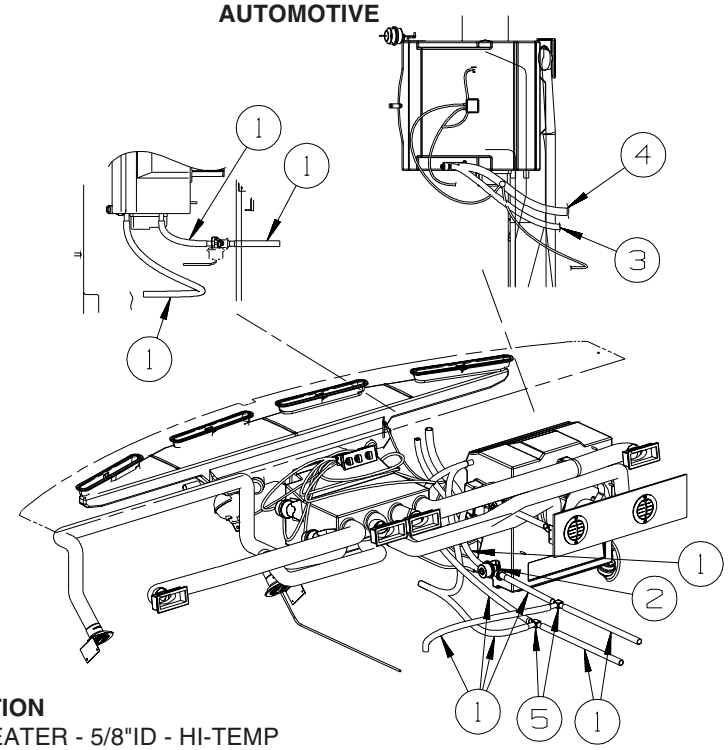

WORKHORSE

KEY	PART NUMBER	U/M	DESCRIPTION
1	007108-01-000	FT	HOSE - HEATER - 5/8"ID - HI-TEMP
2	103930-23-000	EA	VALVE/WATER - 2 PORT/VACUUM CONTROLLED - “NEW DESIGN”
3*	103930-46-000	EA	HOSE - EXPANSION BLOCK (EVAPORATOR) TO COMPRESSOR
4*	103930-47-000	EA	HOSE - EXPANSION VALVE (EVAPORATOR) TO DRIER
5	076776-01-000	EA	TEE - BEADED - 5/8" X 5/8" X 5/8"

***COMPONENT PARTS LISTED LATER IN THIS GROUP**

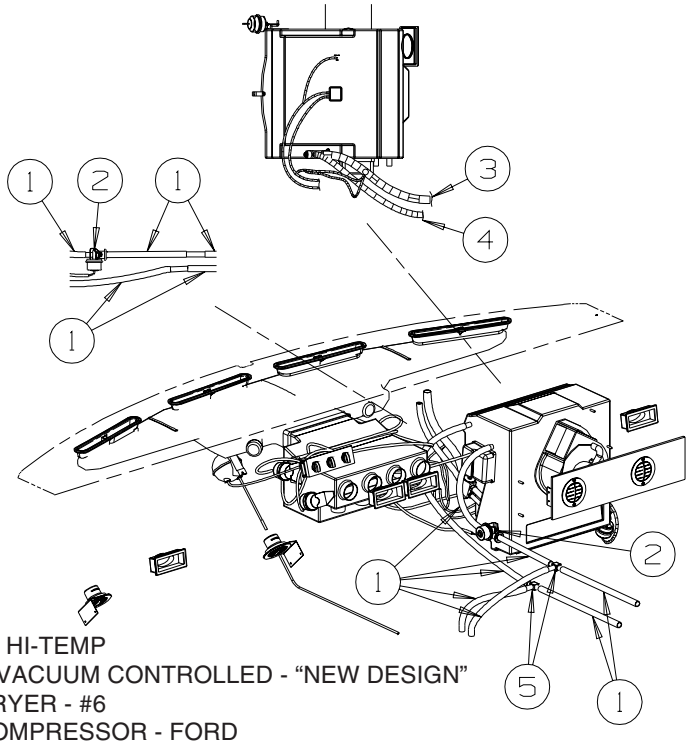

FORD

KEY	PART NUMBER	U/M	DESCRIPTION
1	007108-01-000	FT	HOSE - HEATER - 5/8"ID - HI-TEMP
2	103930-23-000	EA	VALVE/WATER - 2 PORT/VACUUM CONTROLLED - “NEW DESIGN”
3*	103930-44-000	EA	HOSE - EVAPORATOR/DRYER - #6
4*	103930-45-000	EA	HOSE - EVAPORATOR/COMPRESSOR - FORD
5	076776-01-000	EA	TEE - BEADED - 5/8" X 5/8" X 5/8"

***COMPONENT PARTS LISTED LATER IN THIS GROUP**

COPYRIGHT © 2006 WINNEBAGO INDUSTRIES INC.

HEATING & A/C GROUP (CONTINUED)

AUTOMOTIVE (CONTINUED)

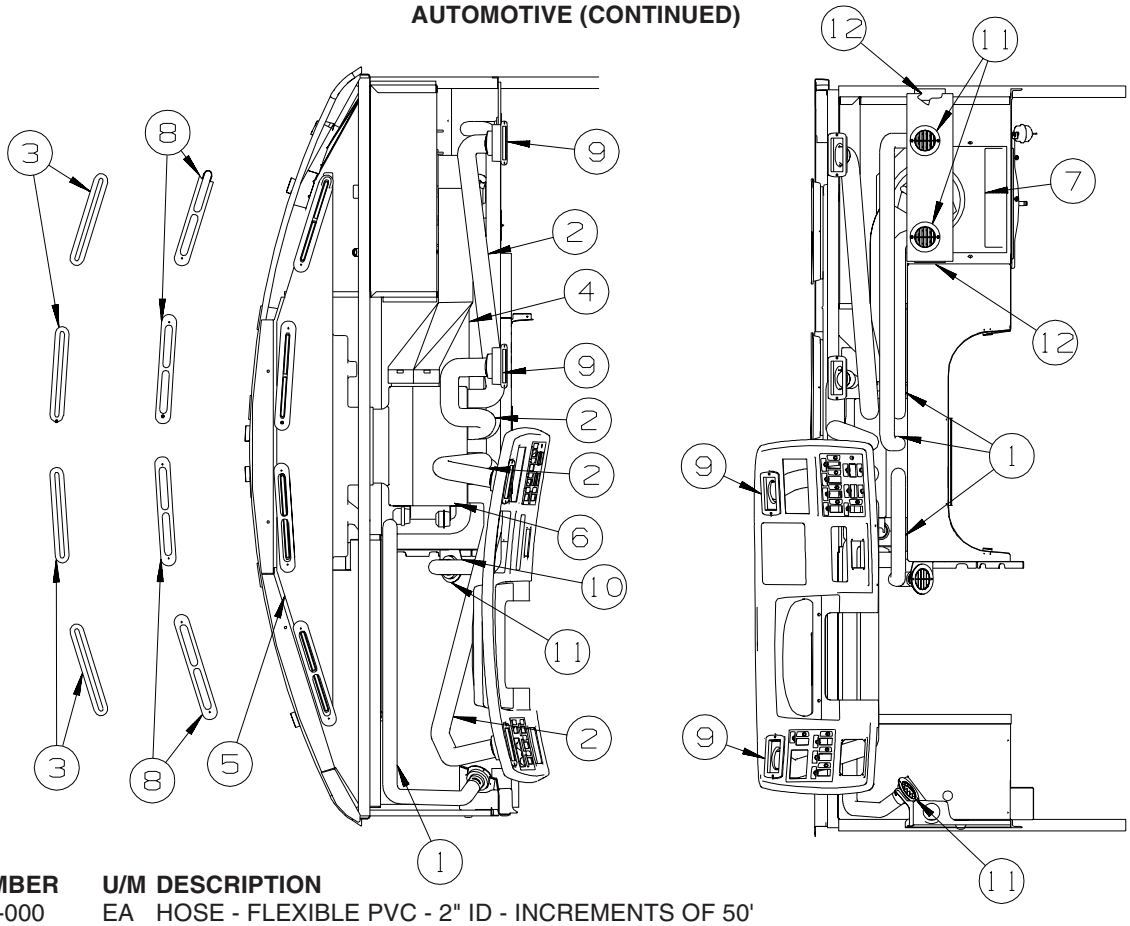

KEY	PART NUMBER	U/M	DESCRIPTION
1	007076-01-000	EA	HOSE - FLEXIBLE PVC - 2" ID - INCREMENTS OF 50'
2	007281-01-000	EA	HOSE - FLEXIBLE PVC - 2 1/2" ID X 50'
3	077075-01-000	EA	GASKET - INSTRUMENT PANEL/DEFROSTER PLENUM - .6" X 10.2"
4	103016-03-000	EA	PLENUM - TRANSITION
5	103017-03-000	EA	PLENUM - DEFROSTER
6*	103930-49-000	EA	CONTROL/PLENUM - LARGE ROTARY
7*	103930-55-000	EA	EVAPORATOR/HEATER - NONCHARGED - SINGLE OUTPUT
8	135265-01-07A	EA	VENT - DEFROSTER - PLASTIC - RIVERSTONE
8	135265-01-06A	EA	VENT - DEFROSTER - PLASTIC - CASHMERE
9	135803-04-01A	EA	LOUVER/A/C-CURVED/ADJ W/MOUNT HOLE- 2.5"X 5.8" F/2.5" HOSE
10	136157-03-02B	EA	BRACKET - HEATER - E-COATED
11	024990-05-000	EA	OUTLET - DEFROSTER - W/SWIVEL - 2" SLEEVE/4" OD - BLACK
12	156732-02-01A	EA	BRACE
	113452-02-000	FT	SEAL/TRIM - FRONT - VINYL W/WIRE CARRIER - .027" - WHERE HOSES CROSS METAL

***COMPONENT PARTS LISTED LATER IN THIS GROUP**

COPYRIGHT © 2006 WINNEBAGO INDUSTRIES INC.

HEATING & A/C GROUP (CONTINUED)

COMPONENT PARTS FOR AUTOMOTIVE

103930-44-000

KEY	PART NUMBER	U/M	DESCRIPTION	VENDOR NO
	103930-29-701	EA	O'RING F/LOW PRESSURE SWITCH	045-0483
	103930-44-700	EA	HOSE ASSEMBLY #6	085-0462
	113245-01-711	EA	O'RING #6	045-0129

103930-45-000

KEY	PART NUMBER	U/M	DESCRIPTION	VENDOR NO.
	103930-17-702	EA	O'RING #10	045-0127
	103930-45-700	EA	HOSE - #10 EVAP/COMP - 3'	085-0463

103930-46-000

KEY	PART NUMBER	U/M	DESCRIPTION	VENDOR NO
	103930-17-702	EA	O'RING #10	045-0127
	103930-29-701	EA	O'RING F/LOW PRESSURE SWITCH	045-0483
	103930-46-700	EA	HOSE - #10 EVAP/COMP - 4.3'	085-0486

103930-47-000

KEY	PART NUMBER	U/M	DESCRIPTION	VENDOR NO
	103930-47-700	EA	HOSE - #6-EVAP/DRIER - 2.2'	085-0485
	113245-01-710	EA	O'RING, #12	045-0128

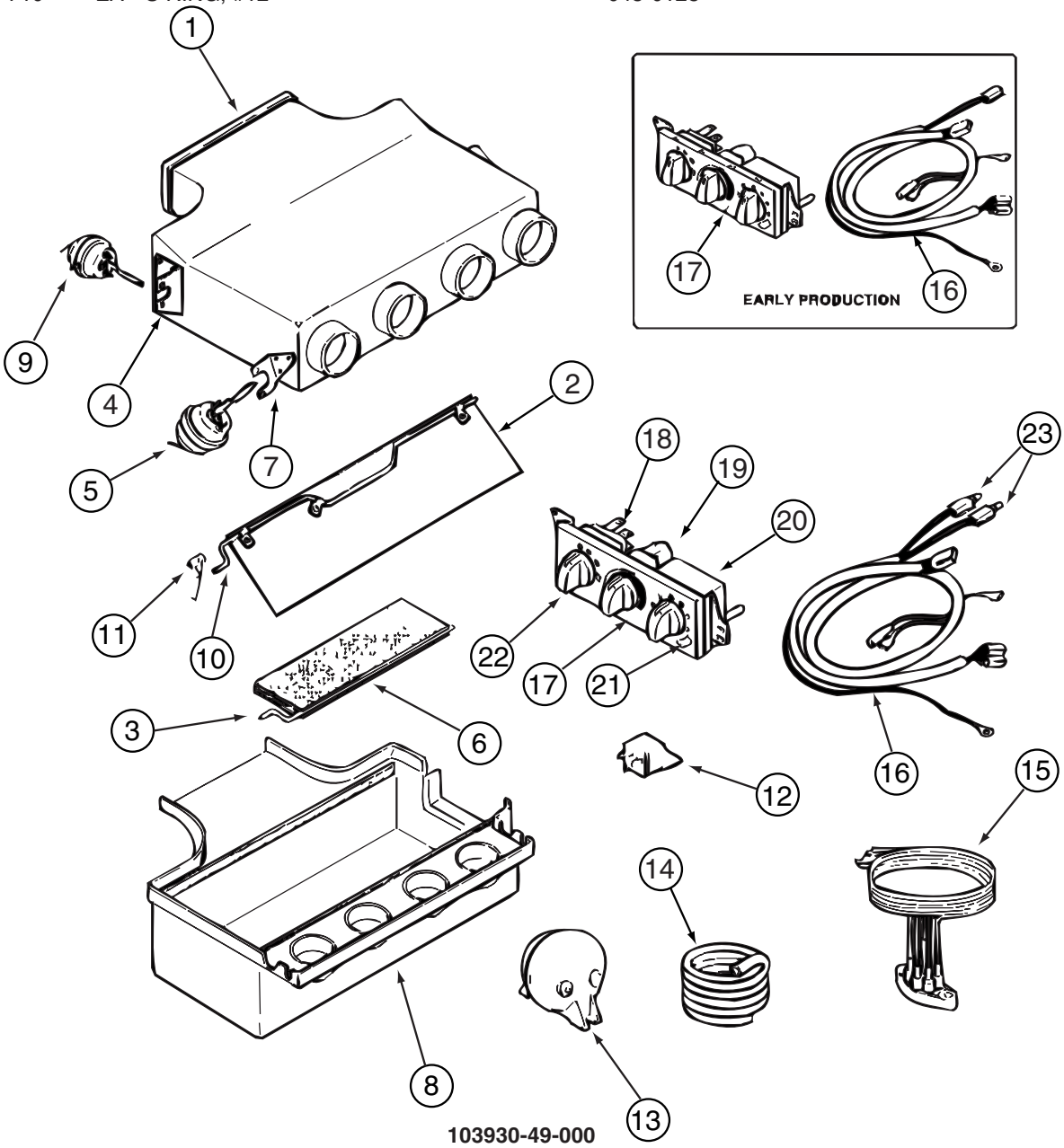

103930-49-000

COPYRIGHT © 2006 WINNEBAGO INDUSTRIES INC.

HEATING & A/C GROUP (CONTINUED)

COMPONENT PARTS FOR AUTOMOTIVE (CONTINUED)

103930-49-000 (CONTINUED)

KEY	PART NUMBER	U/M	DESCRIPTION	VENDOR NO.
1	103930-39-705	EA	PLENUM - TOP	060-0482
2	103930-04-700	EA	DOOR - DEFROSTER-A/C	071-0149
3	103930-39-700	EA	ROD - DOOR - AC/HEAT	073-067
5	103930-02-708	EA	MOTOR-VACUUM SERVO, A/C	030-0025
6	103930-39-706	EA	PLATE - DOOR - A/C	071-0623
8	103930-39-707	EA	PLENUM - BOTTOM	060-0483
9	103930-33-701	EA	MOTOR - VACUUM, 3 STAGE	030-0105
10	103930-39-701	EA	ROD - DOOR - AC/DEFROST	073-0069
11	103930-39-704	EA	SPRING	022-0119
12	103930-02-707	EA	RELAY-BOSCH W/RESISTER	031-0001
13	103930-02-710	EA	CANISTER-VACUUM	054-0002
15	103930-33-703	EA	VACUUM HARNESS	036-0466
16	103930-49-700	EA	HARNESS - WIRE	036-556
16	103930-49-701	EA	HARNESS - WIRE W/BULBS	036-0557
17	103930-49-702	EA	CONTROL PANEL-RECESSED FACE	032-0054
17	103930-49-703	EA	CONTROL PANEL - NON RECESSED	083-0223
18	103930-49-704	EA	SWITCH - BLOWER	032-0332
19	103930-49-705	EA	POTENTIOMETER	032-0182
20	103930-49-706	EA	SWITCH - VACUUM	032-0185
21	103930-49-707	EA	DECAL CONTROL PANEL-N/RECESS	058-0144
22	103930-49-708	EA	KNOB - BLOWER - NONRECESSED	062-0620
23	103930-33-705	EA	LIGHT BULBS	035-0030
			CONTACT WINNEBAGO PART SALES FOR UNLISTED COMPONENT(S)	

COPYRIGHT © 2006 WINNEBAGO INDUSTRIES INC.

HEATING & A/C GROUP (CONTINUED)

COMPONENT PARTS FOR AUTOMOTIVE (CONTINUED)

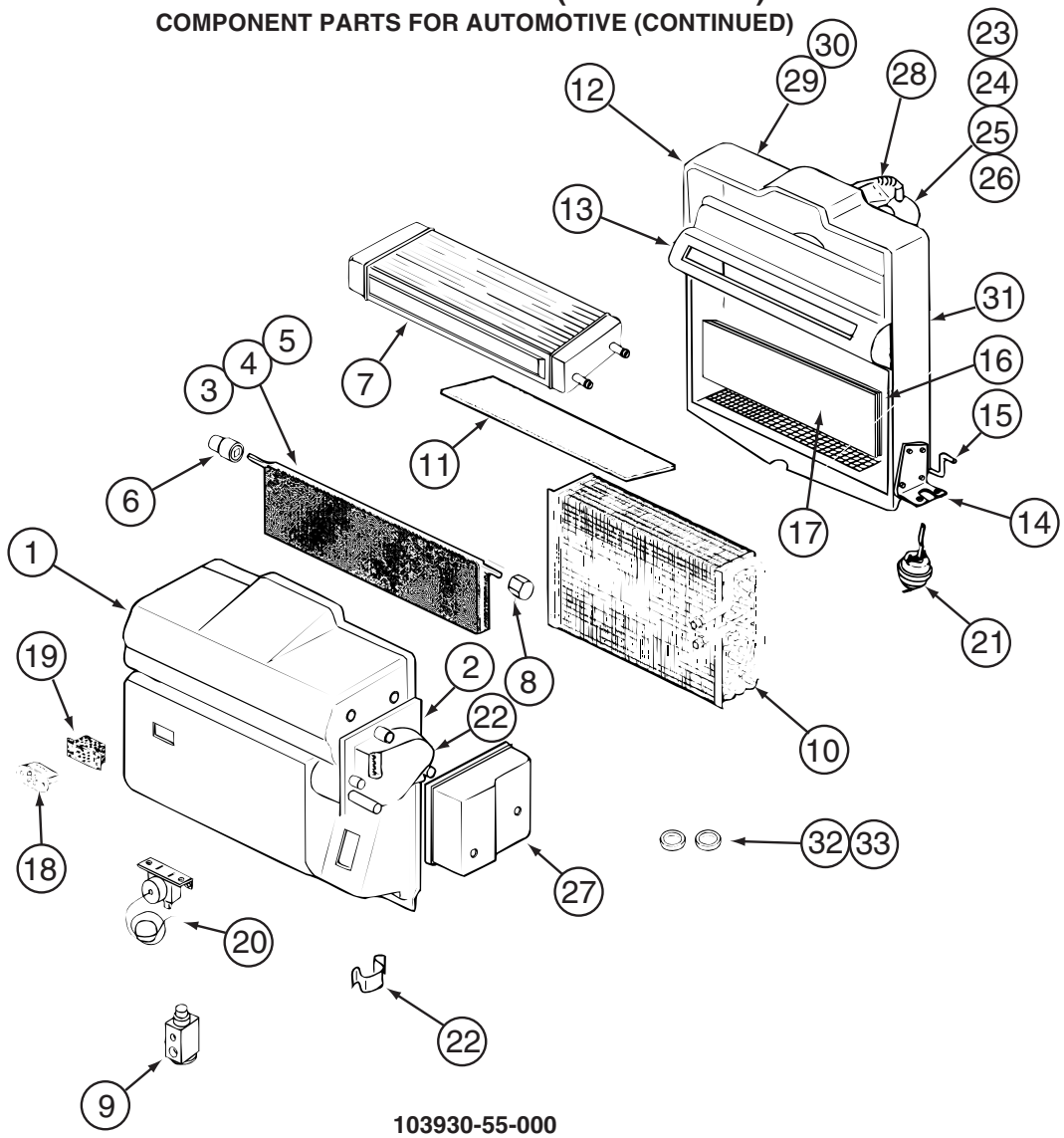

103930-55-000

KEY	PART NUMBER	U/M	DESCRIPTION	VENDOR NO.
1	103930-55-701	EA	CASE - FRONT	062-0658
2	103930-30-701	EA	PLATE - MOTOR MOUNT	062-0544
3	103930-55-705	EA	DOOR - BLEND AIR	071-0892
6	103930-30-702	EA	BUSHING/DRIVE (BLEND DOOR)	062-0168
7	103930-55-706	EA	CORE - HEATER - W/GASKET	084-0271
8	103930-30-709	EA	COUPLING - BLEND DOOR SHAFT	062-0634
9	103930-20-700	EA	VALVE-EXPANSION-BLOCK, 2 TON	034-0032
10	103930-55-700	EA	CORE-EVAPORATOR	041-00168
12	103930-55-702	EA	CASE-REAR	062-0657
14	103930-01-708	EA	BRACKET-VACUUM MOTOR	070-0113
15	103930-20-704	EA	ROD-DOOR-RECIRCULATING	073-0018
16	103930-55-707	EA	DOOR - RECIRCULATION	071-0891
18	103930-01-710	EA	RESISTOR-FUSED, A/C 4 TERM	035-0006
20	103930-01-711	EA	THERMOSTAT	033-0003
21	103930-02-708	EA	MOTOR-VACUUM SERVO, A/C	030-0025
22	103930-30-703	EA	MOTOR - SERVO	030-0104
23	103930-20-707	EA	HOUSING-BLOWER	062-0145
24	103930-55-703	EA	MOTOR-BLOWER W/O PIGTAIL	030-0137
25	103930-01-717	EA	WHEEL-BLOWER, CLOCKWISE	062-0010
26	103930-20-708	EA	CLIP-MOTOR SHAFT	022-0001
27	103930-30-704	EA	COVER - SERVO	062-0545
32	113245-01-707	EA	O'RING #8	045-0126
33	103930-17-702	EA	O'RING #10	045-0127
	103930-55-704	EA	CORE-HEATER	042-0059
	110279-01-703	EA	HOSE-VENT F/BLOWER MOTOR	051-0034

CONTACT WINNEBAGO PART SALES FOR UNLISTED COMPONENT(S)

COPYRIGHT © 2006 WINNEBAGO INDUSTRIES INC.

HEATING & A/C GROUP (CONTINUED)

FURNACE

KEY	PART NUMBER	U/M	DESCRIPTION
*	143563-01-000	EA	FURNACE - 35000 BTU/HIGH QUIET - SUBURBAN SH-35 2322 - 35,000 BTU FURNACE
*	143563-02-000	EA	FURNACE - 40000 BTU HIGH QUIET - SUBURBAN SH-40 2322 - 40,000 BTU FURNACE
	093614-13-02A	EA	GRILLE - AIR RETURN - 15.9" X 11.9" - BEIGE
	093614-15-02A	EA	GRILL - RETURN AIR - DURA BEIGE
	126693-05-02B	EA	PANEL - EXHAUST/FURNACE - E-COATED
	137965-01-02A	EA	REGISTER - 11.2" X 3.6"(9.7 X 2.1"R/O) W/O DAMPER-ANT PWTR
	137965-02-02A	EA	REGISTER - 11.2" X 3.6"(9.7 X 2.1"R/O) W/DAMPER - ANT PWTR
	137965-03-02A	EA	REGISTER - 11.2"X3.6" W/O DMPR-W/O SCREW HOLES/VINYL FLOOR
	139980-05-000	EA	VENT - INTAKE
	139980-06-000	EA	VENT CAP
	141337-01-01A	EA	GASKET - FURNACE
	143563-03-02A	EA	DOOR/ACCESS - FURNACE - W/FRAME - BLACK
	143563-04-000	EA	PLATE END - COLLAR
	143563-05-000	EA	GASKET - FIBERGLASS - SUBURBAN #071018
	024990-08-000	EA	OUTLET - DEFROSTER - W/O SWIVEL - 2" SLEEVE/4" OD - WHITE
	105290-01-000	SF	INSULATION - AIR POCKET W/FOIL
	092776-01-000	EA	ADAPTER - DUCT - 2”
	009198-02-000	EA	DUCT - HEAT - FLEXIBLE - 2” ID X 25’
	134651-01-000	FT	SEAL - 1/2” X 3/4” PSA 1 SIDE
	141194-03-02B	EA	PANEL - CLOSEOUT - FURNACE - E-COATED

***COMPONENT PARTS LISTED LATER IN THIS GROUP**

COPYRIGHT © 2006 WINNEBAGO INDUSTRIES INC.

HEATING & A/C GROUP (CONTINUED)

COMPONENT PARTS FOR FURNACE

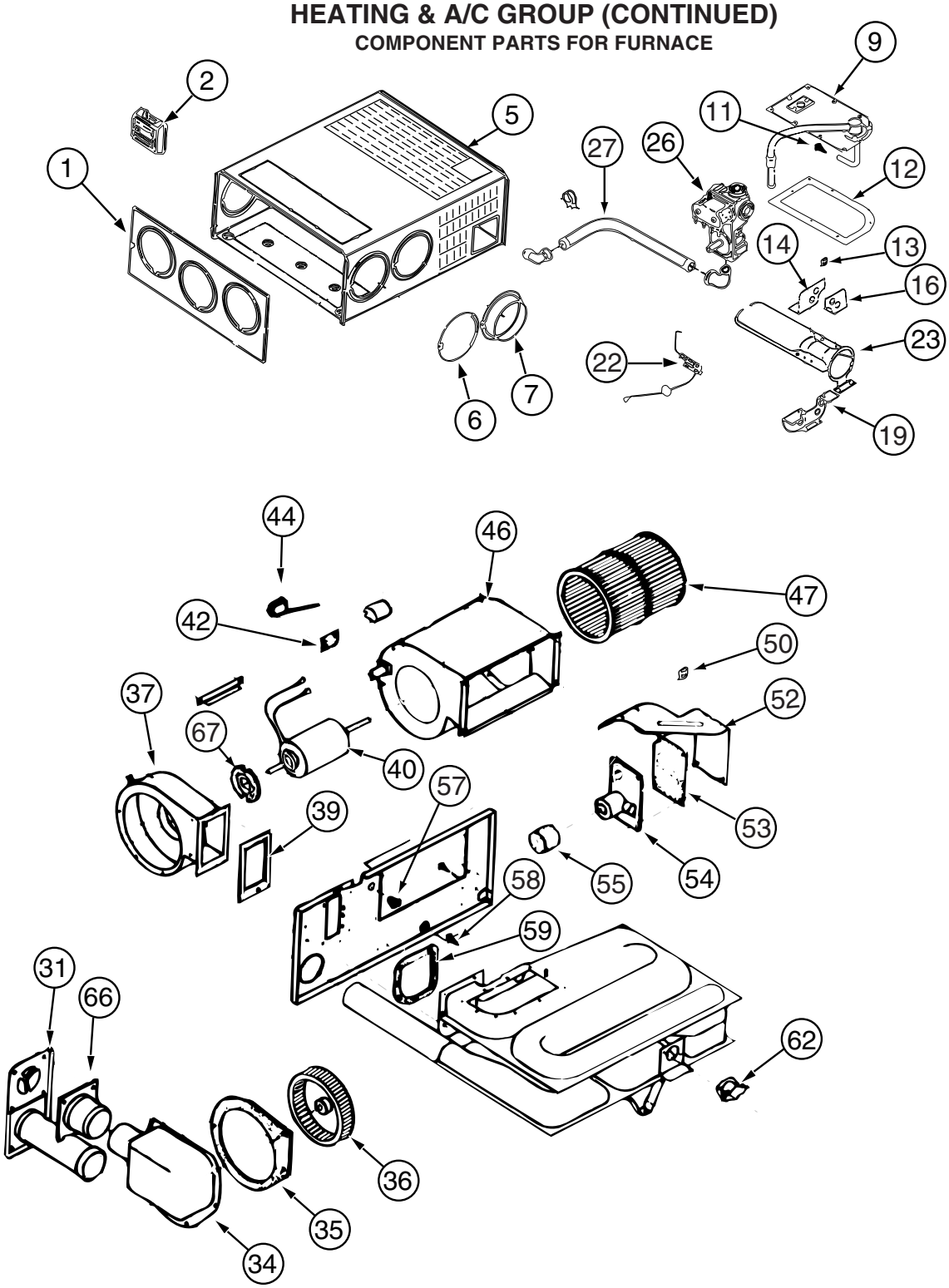

143563-01-000

COPYRIGHT © 2006 WINNEBAGO INDUSTRIES INC.

HEATING & A/C GROUP (CONTINUED)

COMPONENT PARTS FOR FURNACE (CONTINUED)

143563-01-000 (CONTINUED)

KEY	PART NUMBER	U/M	DESCRIPTION	VENDOR NO.
1	143563-01-700	EA	CABINET - FRONT	101907
2			12 vOLT WIRING AREAS FOR CORRECT THERMOSTAT	
5	143563-01-701	EA	CABINET	101921
7	075696-02-703	EA	COLLAR - DUCT	050715
9	143563-01-702	EA	MANIFOLD ASSEMBLY	171599
11	143563-01-703	EA	ORFICE - MAIN BURNER	180308
12	098668-22-703	EA	GASKET - BURNER ACCESS COVER	070811
14	143563-01-704	EA	PLATE - SECONDARY AIR/TOP BACK	063199
16	143563-01-705	EA	PLATE - SECONDARY AIR/TOP FRT	062936
19	143563-01-706	EA	PLATE - SECONDARY AIR/BOTTOM	062938
22	139980-01-701	EA	ELECTRODE	232286
23	098668-02-700	EA	BURNER ASSEMBLY,SF-30 & SF35	010745
26	098668-01-718	EA	VALVE-GAS SF S.N.974903079	161122
27	143563-01-707	EA	PIPE ASSEMBLY (GAS INLET)	171603
31	098668-01-707	EA	TUBE ASSEMBLY, EXHAUST W/CAP	260231
34	143563-01-708	EA	BOX ASM (COMB. AIR INTAKE)	051430BK
35	143563-01-709	EA	GASKET (COMB. AIR HOUSING)	071108
36	143563-01-710	EA	WHEEL (COMBUSTION AIR)	350199
37	143563-01-711	EA	HOUSING (COMBUSTION AIR)	390862BK
39	143563-01-715	EA	GASKET-FIREWALL/COMB. AIR	071107
40	143563-01-712	EA	MOTOR ASSEMBLY	232727
42	101990-01-714	EA	GASKET-MICROSWITCH	230877
44	098668-21-700	EA	SWITCH-MICRO-W/O FLAG 3 1/4"	232261
46	143563-01-713	EA	BLOWER ASSEMBLY(ROOM AIR)	390867BK
47	143563-01-714	EA	WHEEL - ROOM AIR	350198
50	139980-01-710	EA	SWITCH - ON/OFF	232351
52	139980-01-711	EA	PANEL ASSEMBLY-MODULE BD	101663
53	139980-01-712	EA	INSULATOR - MODULE BD	070807
54	098668-22-705	EA	MODULE BD W/RELAY TIME DELAY	520820
55	139980-01-713	EA	CAP/INSULATOR-MODULE BD	070973
57	139980-01-714	EA	BUSHING - UNIVERSAL	070362
58	139980-01-715	EA	BUSHING - STRAIN RELIEF	231809
59	098668-01-716	EA	GASKET-FIREWALL,CHAMBER SIDE	070808
62	098668-21-701	EA	SWITCH - LIMIT	232504
66	098668-01-713	EA	TUBE ASSEMBLY, INTAKE	051248
67	075697-07-703	EA	GASKET - MOTOR	070448
	143563-01-716	EA	CHAMBER ASM. - FINAL	
			CONTACT WINNEBAGO PART SALES FOR UNLISTED COMPONENT(S)	

COPYRIGHT © 2006 WINNEBAGO INDUSTRIES INC.

HEATING & A/C GROUP (CONTINUED)

COMPONENT PARTS FOR FURNACE (CONTINUED)

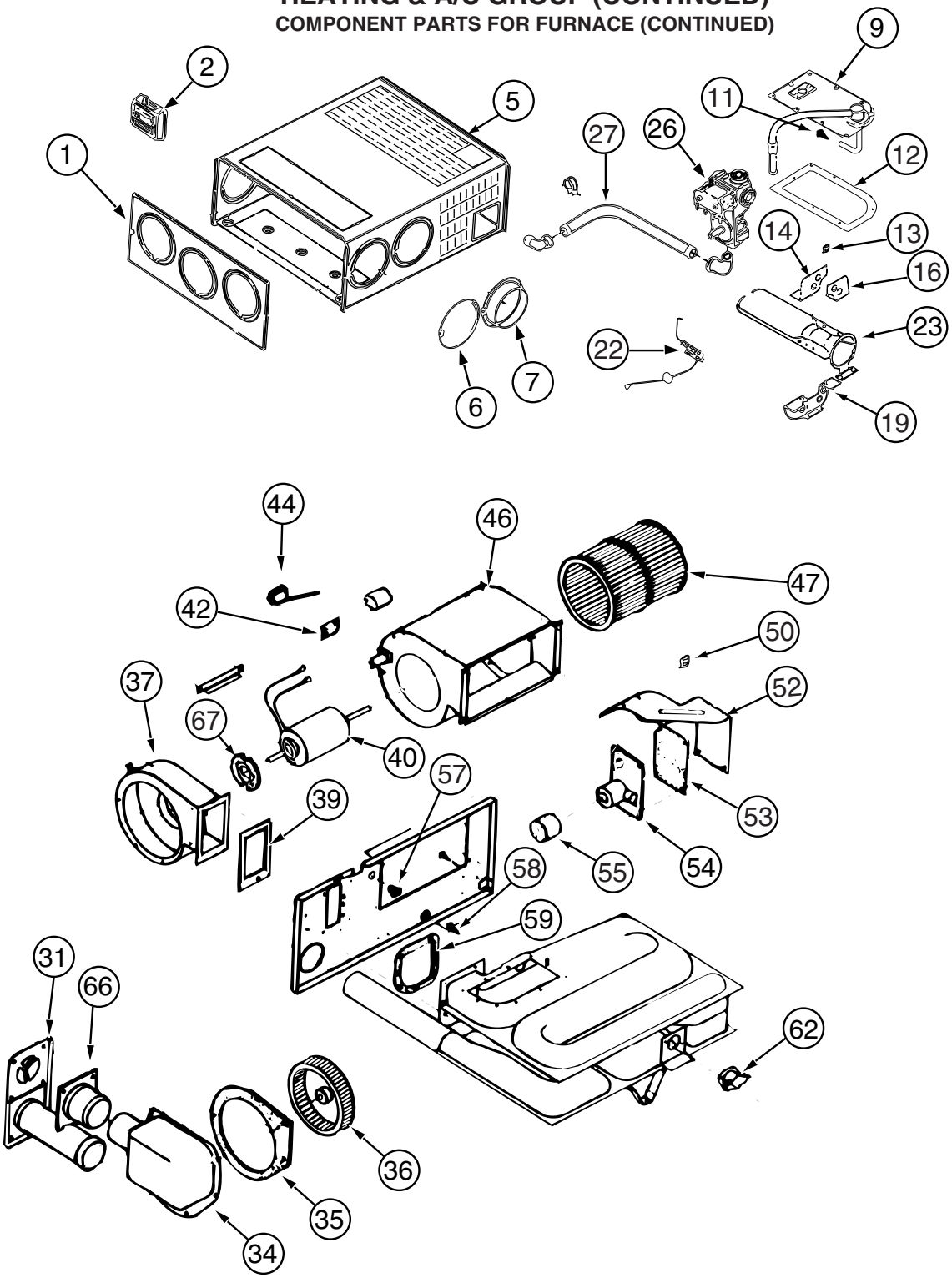

143563-02-000

COPYRIGHT © 2006 WINNEBAGO INDUSTRIES INC.

HEATING & A/C GROUP (CONTINUED)

COMPONENT PARTS FOR FURNACE (CONTINUED)

143563-02-000 (CONTINUED)

KEY	PART NUMBER	U/M	DESCRIPTION	VENDOR NO.
1	143563-01-700	EA	CABINET - FRONT	101907
2			SEE 12 VOLT WIRING AREAS FOR CORRECT THERMOSTAT	
5	143563-02-700	EA	CABINET	101915
7	075696-02-703	EA	COLLAR - DUCT	050715
9	143563-01-702	EA	MANIFOLD ASSEMBLY	171599
11	143563-02-701	EA	ORFICE - MAIN BURNER	180309
12	098668-22-703	EA	GASKET - BURNER ACCESS COVER	070811
14	143563-02-702	EA	PLATE - SECONDARY AIR/TOP BACK	063198
16	143563-02-703	EA	PLATE - SECONDARY AIR/TOP FRT	062933
19	143563-02-704	EA	PLATE - SECONDARY AIR/BOTTOM	062935
22	139980-01-701	EA	ELECTRODE	232286
23	098668-11-701	EA	BURNER ASSEMBLY, SF-42F	010799
26	098668-01-718	EA	VALVE-GAS SF S.N.974903079	161122
27	143563-01-707	EA	PIPE ASSEMBLY (GAS INLET)	171603
31	098668-01-707	EA	TUBE ASSEMBLY, EXHAUST W/CAP	260231
34	143563-01-708	EA	BOX ASM (COMB. AIR INTAKE)	051430BK
35	143563-01-709	EA	GASKET (COMB. AIR HOUSING)	071108
36	143563-01-710	EA	WHEEL (COMBUSTION AIR)	350199
37	143563-01-711	EA	HOUSING (COMBUSTION AIR)	390862BK
39	143563-01-715	EA	GASKET-FIREWALL/COMB. AIR	071107
40	143563-02-705	EA	MOTOR ASSEMBLY	232726
42	101990-01-714	EA	GASKET-MICROSWITCH	230877
44	098668-21-700	EA	SWITCH-MICRO-W/O FLAG 3 1/4"	232261
46	143563-01-713	EA	BLOWER ASSEMBLY(ROOM AIR)	390867BK
47	143563-01-714	EA	WHEEL - ROOM AIR	350198
50	139980-01-710	EA	SWITCH - ON/OFF	232351
52	139980-01-711	EA	PANEL ASSEMBLY-MODULE BD	101663
53	139980-01-712	EA	INSULATOR - MODULE BD	070807
54	098668-22-705	EA	MODULE BD W/RELAY TIME DELAY	520820
55	139980-01-713	EA	CAP/INSULATOR-MODULE BD	070973
57	139980-01-714	EA	BUSHING - UNIVERSAL	070362
58	139980-01-715	EA	BUSHING - STRAIN RELIEF	231809
59	098668-01-716	EA	GASKET-FIREWALL,CHAMBER SIDE	070808
62	143563-02-706	EA	SWITCH - LIMIT	232735
66	098668-01-713	EA	TUBE ASSEMBLY, INTAKE	051248
67	075697-07-703	EA	GASKET - MOTOR	070448
	143563-02-707	EA	CHAMBER ASM. - FINAL	021172BK
			CONTACT WINNEBAGO PART SALES FOR UNLISTED COMPONENT(S)	

COPYRIGHT © 2006 WINNEBAGO INDUSTRIES INC.

HEATING & A/C GROUP (CONTINUED)

REAR HEATER

KEY	PART NUMBER	U/M	DESCRIPTION
	147610-01-000	EA	HEATER - AUTO/AUX - G33V, G35A, G35U, G37B, G38R, G38T
	147610-02-000	EA	HEATER - AUTO/AUX - G38J
	104692-01-000	FT	SEAL - ADHESIVE BACKED FOAM - 3/4" THICK X 3/4" WIDE X 25'
	007108-01-000	FT	HOSE - HEATER - 5/8" ID - HI-TEMP
	076776-01-000	EA	TEE - BEADED - 5/8" X 5/8" X 5/8"
	079059-01-000	EA	HOSE - 90 DEGREE - 5/8"ID X 4" X 36"
	079059-13-000	EA	HOSE - 90 DEGREE - .61"ID X 4" X 48"
	137965-01-02A	EA	REGISTER - 11.2" X 3.6"(9.7 X 2.1"R/O) W/O DAMPER-ANT PWTR

COPYRIGHT © 2006 WINNEBAGO INDUSTRIES INC.

HEATING & A/C GROUP (CONTINUED)

CENTRAL

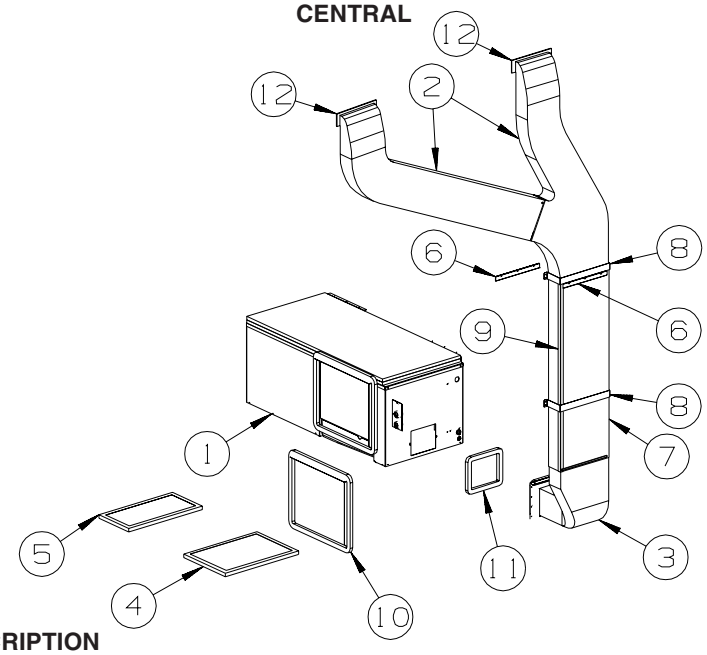

KEY	PART NUMBER	U/M	DESCRIPTION
1*	105620-12-000	EA	A/C - CENTRAL - RIGHT HAND/HEAT PUMP - 12,000 BTU COMP
2	M09204-01-000	EA	DUCT/AC - UPPER RIGHT HAND & LEFT HAND
	105290-01-000	SF	INSULATION - AIR POCKET W/FOIL
3	P38842-01-000	EA	DUCT - CENTRAL AIR/FORCED - W/INSULATION - LOWER
	105290-01-000	SF	INSULATION - AIR POCKET W/FOIL
4	109050-02-000	EA	FILTER/FURNACE-AC - FIBERGLASS - 1" X 14" X 20" - G38G USES 2, ALL OTHER G-SERIES USE 1
5	109050-03-000	EA	FILTER/FURNACE-AC - FIBERGLASS - 1" X 10" X 20" - G33V ONLY
6	115886-11-02A	EA	RETAINER - SIDEWALL - MILL - 11.8"
7	117870-11-01A	EA	PLENUM - A/C - 43”
8	129047-01-02B	EA	STRAP/MOUNTING - AIR DUCT - E-COATED
9	130262-06-000	EA	PROTECTOR - CORNER SAVER - .7” X .7”
10	134588-01-000	EA	GASKET - DUCT - 15.5" X 18.2" IS - 17.4" X 20.2" OS
11	134588-02-000	EA	GASKET - DUCT - 6.4" X 7.4" IS - 8.3" X 9.4" OS
12	104692-01-000	EA	SEAL - ADHESIVE BACKED FOAM - 3/4" THICK X 3/4" WIDE X 25'

***COMPONENT PARTS LISTED LATER IN THIS GROUP**

COPYRIGHT © 2006 WINNEBAGO INDUSTRIES INC.

HEATING & A/C GROUP (CONTINUED)

COMPONENT PARTS FOR CENTRAL

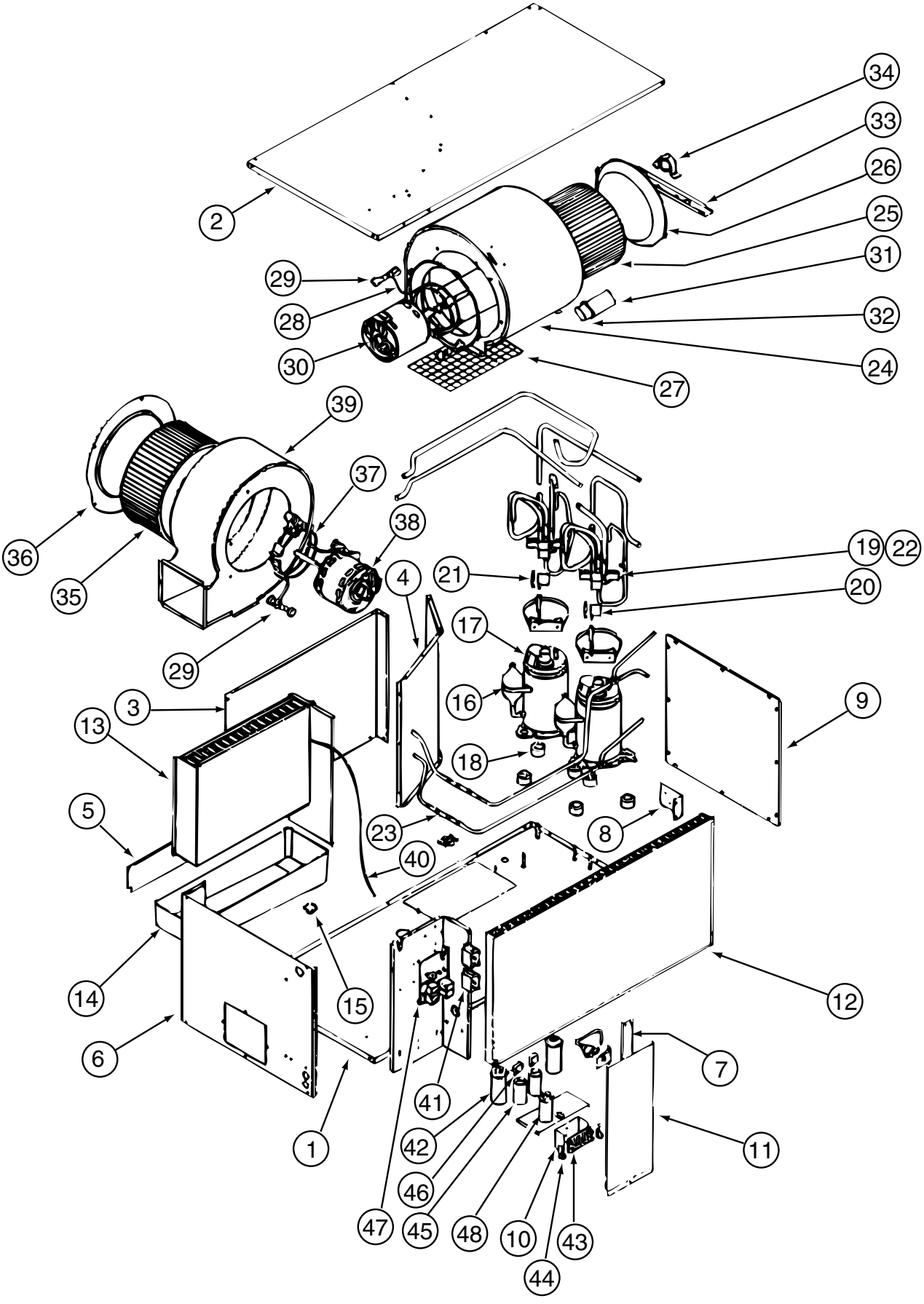

105620-12-000

COPYRIGHT © 2006 WINNEBAGO INDUSTRIES INC.

HEATING & A/C GROUP (CONTINUED)

COMPONENT PARTS FOR CENTRAL (CONTINUED)

105620-12-000 (CONTINUED)

KEY	PART NUMBER	U/M	DESCRIPTION	VENDOR NO.
10	105620-01-733	EA	ISOLATOR-HIGH VOLTAGE	6795-117
11	105620-10-716	EA	DOOR - ELECTRIC BOX	6535B346
12	105620-12-701	EA	COIL - CONDENSER	1452A1621
13	105620-12-702	EA	COIL - EVAPORATOR	1452A1611
15	105620-12-703	EA	VALVE - DRAIN	6795-200
16	105620-12-723	EA	COMPRESSOR (PANASONIC)	1450-2229
17	105620-12-705	EA	OVERLOAD	1450-0081
18	105620-01-706	EA	MOUNTING PKG.,COMP., 3 PER	6759-3081
19	105620-12-724	EA	REVERSING VALVE ASSEMBLY	6535-535
20	105620-12-708	EA	COIL - SOLENOID	1460-1081
21	105620-12-709	EA	WIRE HARNESS-REVERSING VALVE	6536-111
22	105620-12-710	EA	VALVE - REVERSE ONLY	1454A350
23	105620-12-711	EA	RESTRICTOR - BY FLOW	1454-2521
24	105620-10-718	EA	BLOWER HOUSING/OUTSIDE AIR	6536-515
25	105620-01-713	EA	WHEEL-BLOWER/OUTSIDE AIR	1472-1011
26	105620-01-714	EA	VENTURI-BLOWER/OUTSIDE AIR	6795A150
28	105620-01-715	EA	MOUNT-BLOWER/OUTSIDE AIR	6795A3011
29	105620-01-716	EA	SLEEVE & GROMMET, 4 PER PKKG.	6795A3031
30	105620-10-721	EA	MOTOR/BLOWER-8 3/4" SHAFT	1468A3029
31	105620-01-718	EA	CAPACITOR-FAN (OUTDOOR MOTOR))	1499-5631
32	105620-10-715	EA	RUBBER CAPACITOR BOOT	1499-951
33	105620-10-700	EA	BEARING BRACKET/OUTSIDE AIR	6536-514
34	105620-10-701	EA	BEARING/PILLOW BLOCK-O/S AIR	6536-3011
35	105620-11-701	EA	BLOWER WHEEL/INSIDE AIR	1472-1151
36	105620-12-715	EA	BLOWER VENTURI/INSIDE AIR	6535A287
37	105620-01-723	EA	MOUNT-BLOWER MOTOR - I/S AIR	6795-302
38	105620-12-716	EA	BLOWER MTR/IN AIR/REVERSIBLE	1468-3219
39	105620-11-706	EA	MOTOR/BLOWER KIT	6535B5901
40	105620-12-719	EA	COIL SENSOR	7330A3231
41	105620-01-729	EA	RELAY-COMPRESSOR -4 TERMINAL	1460-1131
42	105620-12-725	EA	COMPRESSOR RUN CAPACITOR	1499-5731
43	105620-01-738	EA	BOARD-TERMINAL, HIGH VOLTAGE	6795-315
46	105620-10-705	EA	PTCR (START DEVICE) - W/CAP.	8333A9021
47	105620-12-721	EA	CIRCUIT BD (6535 A SERIES)	6535A3201
48	093763-01-704	EA	CAPACITOR-FAN (INDOOR MOTOR)	1499-5461
	105620-10-720	EA	FUSE/BUSS(8AMP/250V) 2 PKG	6535-3081
			CONTACT WINNEBAGO PART SALES FOR UNLISTED COMPONENT(S)	

COPYRIGHT © 2006 WINNEBAGO INDUSTRIES INC.

INTERIOR FINISH GROUP

MOLDINGS & TRIMS

PORTSMOUTH OAK, CONCERT CHERRY, WASHED MAPLE, SIERRA MAPLE

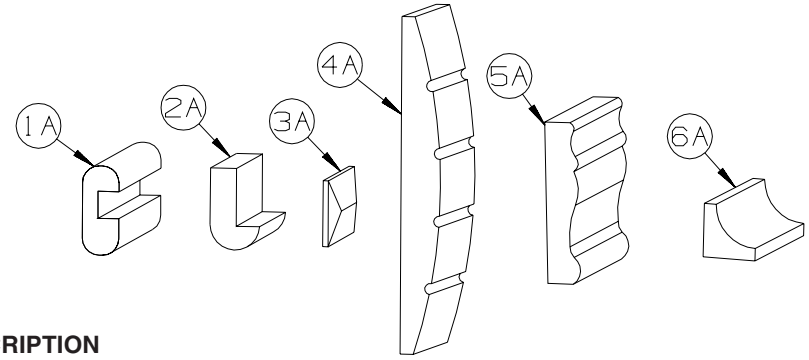

KEY	PART NUMBER	U/M	DESCRIPTION
1A	M09412-62-N42	EA	MOLDING/SHELF EDGE - .6" X 1.3" X 96" - PORTSMOUTH OAK
1A	M09412-62-M52	EA	MOLDING/SHELF EDGE - .6" X 1.3" X 96" - CHERRY - CONCERT CHERRY
1A	M09412-62-M62	EA	MOLDING/SHELF EDGE - .6" X 1.3" X 96" - WASHED MAPLE - WASHED MAPLE
1A	M09412-62-RC3	EA	MOLDING/SHELF EDGE - .6" X 1.3" X 96" - HONEY CHERRY - HONEY CHERRY
1A	M09412-62-SA3	EA	MOLDING/SHELF EDGE - .6" X 1.3" X 96" - MAPLE - SIERRA MAPLE
2A	M09450-77-PC0	EA	MOLDING - TRIM/HDWD W/LIP -.4"X3.2"X79.6" - PORTSMOUTH OAK
2A	M09450-77-PC1	EA	MOLDING - TRIM/HDWD W/LIP -.4"X3.2"X79.6" - CONCERT CHERRY
2A	M09450-77-PC2	EA	MOLDING - TRIM/HDWD W/LIP -.4"X3.2"X79.6" - WASHED MAPLE
2A	M09450-77-RC3	EA	MOLDING - TRIM/HDWD W/LIP -.4"X3.2"X79.6" - HONEY CHERRY
2A	M09501-31-TG0	EA	MOLDING/TRIM - .8" X 3.5" X 86.2" - PORTSMOUTH OAK
2A	M09501-31-TG1	EA	MOLDING/TRIM - .8" X 3.5" X 86.2" - CONCERT CHERRY
2A	M09501-31-TG2	EA	MOLDING/TRIM - .8" X 3.5" X 86.2" - WASHED MAPLE
2A	M09501-31-TG3	EA	MOLDING/TRIM - .8" X 3.5" X 86.2" - HONEY CHERRY
2A	M09501-31-TD3	EA	MOLDING/TRIM - .8" X 3.5" X 86.2" - SIERRA MAPLE
2A	M09501-32-TD3	EA	MOLDING/TRIM - W/NOTCH - .8" X 2.5" X 86.2"
2A	M09501-32-TG0	EA	MOLDING/TRIM - W/NOTCH - .8" X 2.5" X 86.2" - PORTSMOUTH OAK
2A	M09501-32-TG1	EA	MOLDING/TRIM - W/NOTCH - .8" X 2.5" X 86.2"-CONCERT CHERRY
2A	M09501-32-TG2	EA	MOLDING/TRIM - W/NOTCH - .8" X 2.5" X 86.2" - WASHED MAPLE,
2A	M09501-32-TG3	EA	MOLDING/TRIM - W/NOTCH - .8" X 2.5" X 86.2" - HONEY CHERRY
2A	M09503-52-T77	EA	MOLDING/TRIM - .75" X 1.2" X 86.5" - PORTSMOUTH OAK
2A	M09503-52-T78	EA	MOLDING/TRIM - .75" X 1.2" X 86.5" - CONCERT CHERRY
2A	M09503-52-T79	EA	MOLDING/TRIM - .75" X 1.2" X 86.5" - WASHED MAPLE
2A	M09503-52-T80	EA	MOLDING/TRIM - .75" X 1.2" X 86.5" - SIERRA MAPLE
2A	M09511-43-T77	EA	MOLDING - TRIM - W/NOTCH - .8" X 1.4" X 86.3" - PORTSMOUTH OAK
2A	M09511-43-T78	EA	MOLDING - TRIM - W/NOTCH - .8" X 1.4" X 86.3" - CONCERT CHERRY
2A	M09511-43-T79	EA	MOLDING - TRIM - W/NOTCH - .8" X 1.4" X 86.3" - WASHED MAPLE
2A	M09438-25-RA3	EA	MOLDING - HARDWOOD-W/NOTCH - 1.4"X 80.2" - CHERRY/HONEY - HONEY CHERRY
2A	M09511-43-T80	EA	MOLDING - TRIM - W/NOTCH - .8" X 1.4" X 86.3" - SIERRA MAPLE
2A	M09511-44-T77	EA	MOLDING - TRIM - W/NOTCH - 1" X 86.4" - PORTSMOUTH OAK
2A	M09511-44-T78	EA	MOLDING - TRIM - W/NOTCH - 1" X 86.4" - CONCERT CHERRY
2A	M09511-44-T79	EA	MOLDING - TRIM - W/NOTCH - 1" X 86.4" - WASHED MAPLE
2A	M09454-25-RA3	EA	MOLDING - HARDWOOD-W/NOTCH - 1" X 77.6" - HONEY CHERRY
2A	M09511-44-T80	EA	MOLDING - TRIM - W/NOTCH - 1" X 86.4" - SIERRA MAPLE
2A	M09515-72-TD0	EA	MOLDING/TRIM - .8" X 2.2" X 86.1" - PORTSMOUTH OAK
2A	M09515-72-TD1	EA	MOLDING/TRIM - .8" X 2.2" X 86.1" - CONCERT CHERRY
2A	M09515-72-TD2	EA	MOLDING/TRIM - .8" X 2.2" X 86.1" - WASHED MAPLE
2A	M09515-72-TD3	EA	MOLDING/TRIM - .8" X 2.2" X 86.1" - SIERRA MAPLE
2A	M09515-73-TD0	EA	MOLDING/TRIM - 4" X 86.1" - PORTSMOUTH OAK
2A	M09515-73-TD1	EA	MOLDING/TRIM - 4" X 86.1" - CONCERT CHERRY
2A	M09515-73-TD2	EA	MOLDING/TRIM - 4" X 86.1" - WASHED MAPLE
2A	M09515-73-TD3	EA	MOLDING/TRIM - 4" X 86.1" - SIERRA MAPLE
3A	M09471-37-R44	EA	MOLDING - TRIM/VEE - .2" X 1" X 33" - PORTSMOUTH OAK
3A	M09471-37-R45	EA	MOLDING - TRIM/VEE - .2" X 1" X 33" - CONCERT CHERRY
3A	M09471-37-R46	EA	MOLDING - TRIM/VEE - .2" X 1" X 33" - WASHED MAPLE
3A	M09471-37-SD3	EA	MOLDING - TRIM/VEE - .2" X 1" X 33" - HONEY CHERRY
3A	M09471-91-R68	EA	MOLDING - TRIM/VEE - .2" X 1" X 34.4" - PORTSMOUTH OAK
3A	M09471-91-R69	EA	MOLDING - TRIM/VEE - .2" X 1" X 34.4" - CONCERT CHERRY
3A	M09471-91-R76	EA	MOLDING - TRIM/VEE - .2" X 1" X 34.4" - WASHED MAPLE
3A	M09471-91-SA3	EA	MOLDING - TRIM/VEE - .2" X 1" X 34.4" - SIERRA MAPLE
3A	M09477-88-S34	EA	MOLDING - TRIM/VEE - .2" X 1" X 19.9" - WASHED MAPLE
3A	M09477-88-S35	EA	MOLDING - TRIM/VEE - .2" X 1" X 19.9" - SIERRA MAPLE
3A	M09501-30-SD0	EA	MOLDING - TRIM/VEE - .2" X 1" X 35.1" - PORTSMOUTH OAK

COPYRIGHT © 2006 WINNEBAGO INDUSTRIES INC.

INTERIOR FINISH GROUP (CONTINUED)

MOLDINGS & TRIMS (CONTINUED)

KEY	PART NUMBER	U/M	DESCRIPTION
3A	M09501-30-SD1	EA	MOLDING - TRIM/VEE - .2" X 1" X 35.1" - CONCERT CHERRY
3A	M09501-30-SD2	EA	MOLDING - TRIM/VEE - .2" X 1" X 35.1" - WASHED MAPLE
3A	M09501-30-SD3	EA	MOLDING - TRIM/VEE - .2" X 1" X 35.1" - HONEY CHERRY
3A	M09501-37-TG0	EA	MOLDING - TRIM/VEE - .2" X 1" X 19.2" - PORTSMOUTH OAK
3A	M09501-37-TG1	EA	MOLDING - TRIM/VEE - .2" X 1" X 19.2" - CONCERT CHERRY
3A	M09501-37-TG2	EA	MOLDING - TRIM/VEE - .2" X 1" X 19.2" - WASHED MAPLE
3A	M09501-37-TD3	EA	MOLDING - TRIM/VEE - .2" X 1" X 19.2" - SIERRA MAPLE
3A	M09501-37-TG3	EA	MOLDING - TRIM/VEE - .2" X 1" X 19.2" - HONEY CHERRY
3A	M09501-63-T77	EA	MOLDING - TRIM/VEE - .2" X 1" X 15" - PORTSMOUTH OAK
3A	M09501-63-T78	EA	MOLDING - TRIM/VEE - .2" X 1" X 15" - CONCERT CHERRY
3A	M09501-63-T79	EA	MOLDING - TRIM/VEE - .2" X 1" X 15" - WASHED MAPLE
3A	M09501-63-T80	EA	MOLDING - TRIM/VEE - .2" X 1" X 15" - SIERRA MAPLE
3A	M09503-62-TG0	EA	MOLDING - TRIM/VEE - .2" X 1" X 26.3" - PORTSMOUTH OAK
3A	M09503-62-TG1	EA	MOLDING - TRIM/VEE - .2" X 1" X 26.3" - CONCERT CHERRY
3A	M09503-62-TG2	EA	MOLDING - TRIM/VEE - .2" X 1" X 26.3" - WASHED MAPLE
3A	M09503-62-TG3	EA	MOLDING - TRIM/VEE - .2" X 1" X 26.3" - HONEY CHERRY
3A	M09511-90-TG0	EA	MOLDING - TRIM/VEE - .2" X 1" X 42.1" - PORTSMOUTH OAK
3A	M09511-90-TG1	EA	MOLDING - TRIM/VEE - .2" X 1" X 42.1" - CONCERT CHERRY
3A	M09511-90-TG3	EA	MOLDING - TRIM/VEE - .2" X 1" X 42.1" - HONEY CHERRY
3A	M09511-90-TG2	EA	MOLDING - TRIM/VEE - .2" X 1" X 42.1" - WASHED MAPLE
3A	M09515-71-T78	EA	MOLDING - TRIM/VEE - .2" X 1" X 14.9" - CONCERT CHERRY
3A	M09515-71-T77	EA	MOLDING - TRIM/VEE - .2" X 1" X 14.9" - PORTSMOUTH OAK
3A	M09515-71-T80	EA	MOLDING - TRIM/VEE - .2" X 1" X 14.9" - SIERRA MAPLE
3A	M09515-71-T79	EA	MOLDING - TRIM/VEE - .2" X 1" X 14.9" - WASHED MAPLE
3A	M09520-15-TD0	EA	MOLDING - TRIM/VEE - .2" X 1" X 15.3" - PORTSMOUTH OAK
3A	M09520-15-TD1	EA	MOLDING - TRIM/VEE - .2" X 1" X 15.3" - CONCERT CHERRY
3A	M09520-15-TD2	EA	MOLDING - TRIM/VEE - .2" X 1" X 15.3" - WASHED MAPLE
3A	M09520-15-TD3	EA	MOLDING - TRIM/VEE - .2" X 1" X 15.3" - SIERRA MAPLE
3A	M09520-96-T59	EA	MOLDING - TRIM/VEE - .2" X 1" X 32.7" - PORTSMOUTH OAK
3A	M09520-96-T60	EA	MOLDING - TRIM/VEE - .2" X 1" X 32.7" - CONCERT CHERRY
3A	M09520-96-T61	EA	MOLDING - TRIM/VEE - .2" X 1" X 32.7" - WASHED MAPLE
3A	M09520-96-TP0	EA	MOLDING - TRIM/VEE - .2" X 1" X 32.7" - SIERRA MAPLE
3A	M09511-32-T77	EA	MOLDING - TRIM/VEE - .4" X 1" X 26.8" - PORTSMOUTH OAK
3A	M09511-32-T78	EA	MOLDING - TRIM/VEE - .4" X 1" X 26.8" - CONCERT CHERRY
3A	M09511-32-T79	EA	MOLDING - TRIM/VEE - .4" X 1" X 26.8" - WASHED MAPLE
3A	M09511-32-T80	EA	MOLDING - TRIM/VEE - .4" X 1" X 26.8" - SIERRA MAPLE
3A	M09511-84-T77	EA	MOLDING - TRIM/VEE - .4" X 1" X 13.5" - PORTSMOUTH OAK
3A	M09511-84-T78	EA	MOLDING - TRIM/VEE - .4" X 1" X 13.5" - CONCERT CHERRY
3A	M09511-84-T79	EA	MOLDING - TRIM/VEE - .4" X 1" X 13.5" - WASHED MAPLE
3A	M09511-84-T80	EA	MOLDING - TRIM/VEE - .4" X 1" X 13.5" - SIERRA MAPLE
3A	M09511-85-T77	EA	MOLDING - TRIM/VEE - .4" X 1" X 10.7" - PORTSMOUTH OAK
3A	M09511-85-T78	EA	MOLDING - TRIM/VEE - .4" X 1" X 10.7" - CONCERT CHERRY
3A	M09511-85-T79	EA	MOLDING - TRIM/VEE - .4" X 1" X 10.7" - WASHED MAPLE
3A	M09511-85-T80	EA	MOLDING - TRIM/VEE - .4" X 1" X 10.7" - SIERRA MAPLE
3A	M09511-86-T77	EA	MOLDING - TRIM/VEE - .4" X 1" X 28.3" - PORTSMOUTH OAK
3A	M09511-86-T78	EA	MOLDING - TRIM/VEE - .4" X 1" X 28.3" - CONCERT CHERRY
3A	M09511-86-T79	EA	MOLDING - TRIM/VEE - .4" X 1" X 28.3" - WASHED MAPLE
3A	M09511-86-T80	EA	MOLDING - TRIM/VEE - .4" X 1" X 28.3" - SIERRA MAPLE
3A	M09477-63-S46	EA	MOLDING - TRIM/VEE - .4" X 1" X 64.1" - PORTSMOUTH OAK - BATH DOOR TRIM
3A	M09477-63-S47	EA	MOLDING - TRIM/VEE - .4" X 1" X 64.1" - CONCERT CHERRY - BATH DOOR TRIM
3A	M09477-63-S48	EA	MOLDING - TRIM/VEE - .4" X 1" X 64.1" - WASHED MAPLE - BATH DOOR TRIM
3A	M09477-63-SR0	EA	MOLDING - TRIM/VEE - .4" X 1" X 64.1" - SIERRA MAPLE - BATH DOOR TRIM
3A	M09477-64-S46	EA	MOLDING - TRIM/VEE - .4" X 1" X 14.9" - PORTSMOUTH OAK - BATH DOOR TRIM
3A	M09477-64-S47	EA	MOLDING - TRIM/VEE - .4" X 1" X 14.9" - CONCERT CHERRY - BATH DOOR TRIM
3A	M09477-64-S48	EA	MOLDING - TRIM/VEE - .4" X 1" X 14.9" - WASHED MAPLE - BATH DOOR TRIM
3A	M09477-64-SR0	EA	MOLDING - TRIM/VEE - .4" X 1" X 14.9" - SIERRA MAPLE - BATH DOOR TRIM
4A	M09462-54-R89	EA	MOLDING - FLUTED, CURVED - .6” X 6” X 82.7” - PORTSMOUTH OAK
4A	M09462-54-R90	EA	MOLDING - FLUTED, CURVED - .6” X 6” X 82.7” - CONCERT CHERRY
4A	M09462-54-R91	EA	MOLDING - FLUTED, CURVED - .6” X 6” X 82.7” - WASHED MAPLE
4A	M09462-54-RE3	EA	MOLDING - FLUTED, CURVED - .6” X 6” X 82.7” - HONEY CHERRY

COPYRIGHT © 2006 WINNEBAGO INDUSTRIES INC.

INTERIOR FINISH GROUP (CONTINUED)

MOLDINGS & TRIMS (CONTINUED)

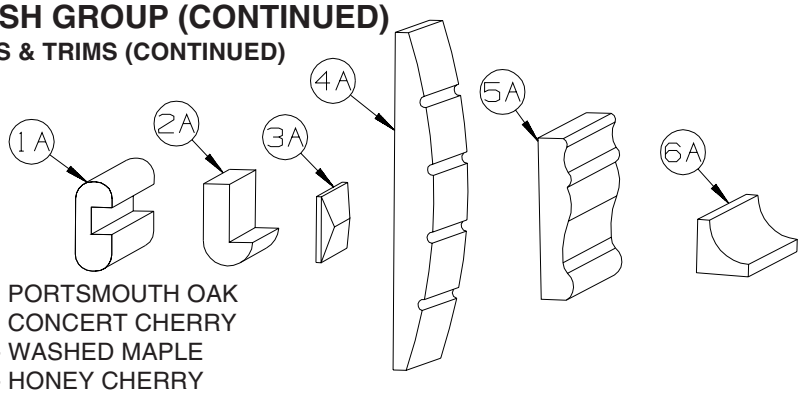

KEY	PART NUMBER	U/M	DESCRIPTION
5A	M09462-66-R74	EA	TRIM - RAIL - .5” X 2.4” X 96” - PORTSMOUTH OAK
5A	M09462-66-R75	EA	TRIM - RAIL - .5” X 2.4” X 96” - CONCERT CHERRY
5A	M09462-66-R76	EA	TRIM - RAIL - .5” X 2.4” X 96” - WASHED MAPLE
5A	M09462-66-RE0	EA	TRIM - RAIL - .5” X 2.4” X 96” - HONEY CHERRY
5A	M09462-66-SA3	EA	TRIM - RAIL - .5” X 2.4” X 96” - SIERRA MAPLE
6A	M09471-79-R38	EA	MOLDING - TRIM/COVE - .8" X .8" X 95.8" - OAK/PORTS OAK - PORTSMOUTH OAK
6A	M09471-79-R39	EA	MOLDING - TRIM/COVE - .8" X .8" X 95.8" - CHERRY/CHERRY - CONCERT CHERRY
6A	M09471-79-R46	EA	MOLDING - TRIM/COVE - .8" X .8" X 95.8" - MAPLE/MAPLE - WASHED MAPLE
6A	M09471-79-RE0	EA	MOLDING - TRIM/COVE - .8" X .8" X 95.8" - HONEY/CHERRY- HONEY CHERRY
6A	M09471-79-SA3	EA	MOLDING - TRIM/COVE - .8" X .8" X 95.8" - HONEY/MAPLE - SIERRA MAPLE

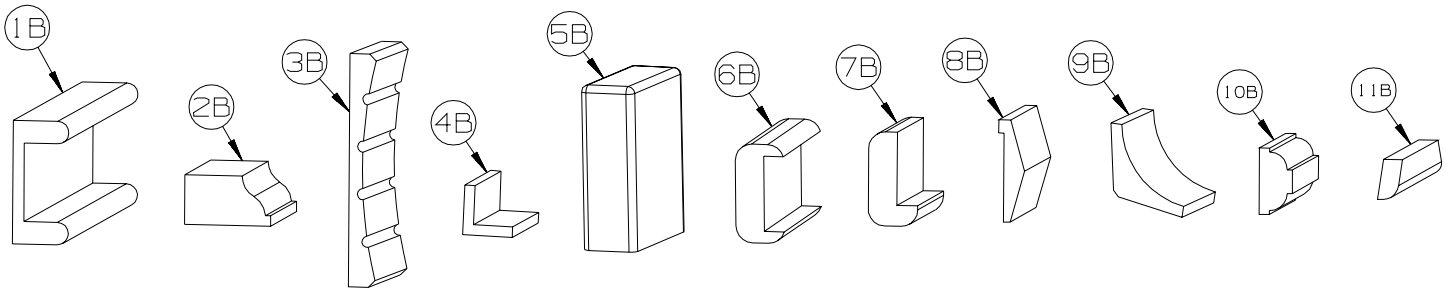

KEY	PART NUMBER	U/M	DESCRIPTION
1B	M09501-84-TG0	EA	MOLDING/TRIM - CAP/WALL - 2.2" X 85.9" - PORTSMOUTH OAK
1B	M09501-84-TG1	EA	MOLDING/TRIM - CAP/WALL - 2.2" X 85.9" - CONCERT CHERRY
1B	M09501-84-TG2	EA	MOLDING/TRIM - CAP/WALL - 2.2" X 85.9" - WASHED MAPLE
1B	M09501-84-TG3	EA	MOLDING/TRIM - CAP/WALL - 2.2" X 85.9" - HONEY CHERRY
2B	M09511-28-T77	EA	MOLDING/TRIM - .8" X 1.3" X 91.8" - PORTSMOUTH OAK
2B	M09511-28-T78	EA	MOLDING/TRIM - .8" X 1.3" X 91.8" - CONCERT CHERRY
2B	M09511-28-T79	EA	MOLDING/TRIM - .8" X 1.3" X 91.8" - WASHED MAPLE
2B	M09511-28-T80	EA	MOLDING/TRIM - .8" X 1.3" X 91.8" - SIERRA MAPLE
3B	M09511-73-TE4	EA	MOLDING/TRIM - FLUTED - 4.1" X 92.5" - PORTSMOUTH OAK
3B	M09511-73-TE5	EA	MOLDING/TRIM - FLUTED - 4.1" X 92.5" - CONCERT CHERRY
3B	M09511-73-TE6	EA	MOLDING/TRIM - FLUTED - 4.1" X 92.5" - WASHED MAPLE
3B	M09511-73-TE7	EA	MOLDING/TRIM - FLUTED - 4.1" X 92.5" - SIERRA MAPLE
4B	M09511-81-TA0	EA	MOLDING/TRIM - FLUTED - 4.1" X 92.5" - PORTSMOUTH OAK
4B	M09511-81-TA1	EA	MOLDING/TRIM - FLUTED - 4.1" X 92.5" - CONCERT CHERRY
4B	M09511-81-TA2	EA	MOLDING/TRIM - FLUTED - 4.1" X 92.5" - WASHED MAPLE
4B	M09511-81-TA3	EA	MOLDING/TRIM - FLUTED - 4.1" X 92.5" - SIERRA MAPLE
5B	M09515-81-T01	EA	MOLDING/HARDWOOD STRAIGHT - 74.3” - WASHED MAPLE
5B	M09515-81-T02	EA	MOLDING/HARDWOOD STRAIGHT - 74.3” - HONEY CHERRY
6B	M09511-42-T77	EA	MOLDING - TRIM - W/NOTCH - 1.5" X 86.4" - PORTSMOUTH OAK
6B	M09511-42-T78	EA	MOLDING - TRIM - W/NOTCH - 1.5" X 86.4" - CONCERT CHERRY
6B	M09511-42-T79	EA	MOLDING - TRIM - W/NOTCH - 1.5" X 86.4" - WASHED MAPLE
6B	M09511-42-T80	EA	MOLDING - TRIM - W/NOTCH - 1.5" X 86.4" - SIERRA MAPLE
7B	M09515-18-T77	EA	MOLDING - HARDWOOD-W/NOTCH - 1.4"X 86.2" - PORTSMOUTH OAK
7B	M09515-18-T78	EA	MOLDING - HARDWOOD-W/NOTCH - 1.4"X 86.2" - CONCERT CHERRY
7B	M09515-18-T79	EA	MOLDING - HARDWOOD-W/NOTCH - 1.4"X 86.2" - WASHED MAPLE
7B	M09515-18-T80	EA	MOLDING - HARDWOOD-W/NOTCH - 1.4"X 86.2" - SIERRA MAPLE
8B	M09515-52-TG0	EA	MOLDING - TRIM/VEE - 1.5" X 73.9" - PORTSMOUTH OAK
8B	M09515-52-TG1	EA	MOLDING - TRIM/VEE - 1.5" X 73.9" - CONCERT CHERRY
8B	M09515-52-TG2	EA	MOLDING - TRIM/VEE - 1.5" X 73.9" - WASHED MAPLE
8B	M09515-52-TG3	EA	MOLDING - TRIM/VEE - 1.5" X 73.9" - HONEY CHERRY
9B	Y00074-72-438	EA	MOLDING/CROWN - VINYL WRAPPED - PORTSMOUTH OAK - 96" - PORTSMOUTH OAK
9B	Y00074-62-438	EA	MOLDING/CROWN - VINYL WRAPPED - CONCERT CHERRY - 96" - CONCERT CHERRY
9B	Y00074-A2-438	EA	MOLDING/CROWN - VINYL WRAPPED - MAPLE - 96" - WASHED MAPLE
9B	Y00074-92-438	EA	MOLDING/CROWN - VINYL WRAPPED - SIERRA MAPLE - 96" - SIERRA MAPLE
10B	Y00076-42-438	EA	MOLDING/TRIM - .5" X 1" X 96" - OAK (UNSTAINED)
10B	Y00076-32-438	EA	MOLDING/TRIM - .5" X 1" X 96" - CHERRY (UNSTAINED)
10B	Y00076-22-438	EA	MOLDING/TRIM - .5" X 1" X 96" - MAPLE (UNSTAINED)

COPYRIGHT © 2006 WINNEBAGO INDUSTRIES INC.

INTERIOR FINISH GROUP (CONTINUED)

MOLDINGS & TRIMS (CONTINUED)

KEY	PART NUMBER	U/M	DESCRIPTION
11B	Y00086-72-438	EA	MOLDING - VINYL WRAP - .7" X 1.6" X 96" - PORTSMOUTH OAK - PORTSMOUTH OAK
11B	Y00086-62-438	EA	MOLDING - VINYL WRAP - .7" X 1.6" X 96" - CHERRY - CONCERT CHERRY
11B	Y00086-A2-438	EA	MOLDING - VINYL WRAP - .7" X 1.6" X 96" - WASHED MAPLE
11B	Y00086-82-438	EA	MOLDING - VINYL WRAP - .7" X 1.6" X 96" - HONEY CHERRY - HONEY CHERRY
11B	Y00086-92-438	EA	MOLDING - VINYL WRAP - .7" X 1.6" X 96" - SIERRA MAPLE - SIERRA MAPLE
11B	Y00087-72-438	EA	MOLDING - VINYL WRAP - .7" X 2.9" X 96" - PORTSMOUTH OAK
11B	Y00087-62-438	EA	MOLDING - VINYL WRAP - .7" X 2.9" X 96" - CONCERT CHERRY
11B	Y00087-A2-438	EA	MOLDING - VINYL WRAP - .7" X 2.9" X 96" - WASHED MAPLE
11B	Y00087-82-438	EA	MOLDING - VINYL WRAP - .7" X 2.9" X 96" - HONEY CHERRY
11B	Y00087-92-438	EA	MOLDING - VINYL WRAP - .7" X 2.9" X 96" - SIERRA MAPLE
11B	Y00267-72-438	EA	MOLDING - VINYL WRAP/MITERED - .6" X 96" - PORTSMOUTH OAK
11B	Y00267-62-438	EA	MOLDING - VINYL WRAP/MITERED - .6" X 96" - CONCERT CHERRY
11B	Y00267-A2-438	EA	MOLDING - VINYL WRAP/MITERED - .6" X 96" - WASHED MAPLE
11B	Y00267-92-438	EA	MOLDING - VINYL WRAP/MITERED - .6" X 96" - SIERRA MAPLE
11B	Y00300-72-438	EA	MOLDING - VINYL WRAP - .3" X .6" X 96" - PORTSMOUTH OAK
11B	Y00300-62-438	EA	MOLDING - VINYL WRAP - .3" X .6" X 96" - CONCERT CHERRY
11B	Y00300-A2-438	EA	MOLDING - VINYL WRAP - .3" X .6" X 96" - WASHED MAPLE
11B	Y00300-92-438	EA	MOLDING - VINYL WRAP - .3" X .6" X 96" - SIERRA MAPLE

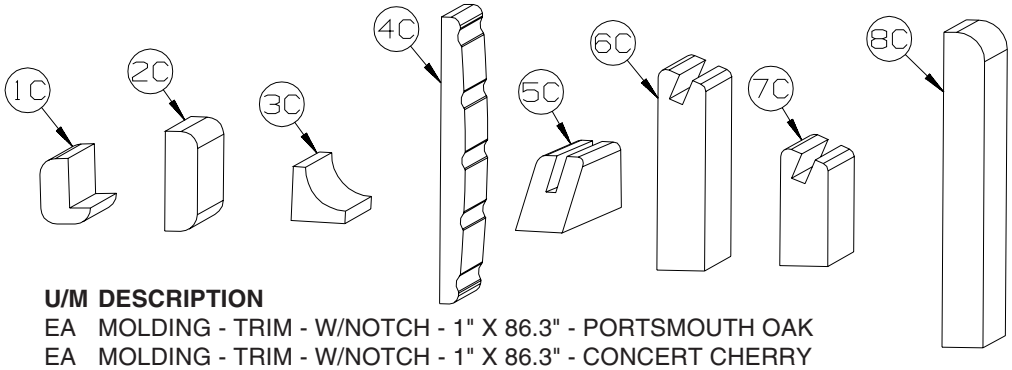

KEY	PART NUMBER	U/M	DESCRIPTION
1C	M09520-19-TD0	EA	MOLDING - TRIM - W/NOTCH - 1" X 86.3" - PORTSMOUTH OAK
1C	M09520-19-TD1	EA	MOLDING - TRIM - W/NOTCH - 1" X 86.3" - CONCERT CHERRY
1C	M09520-19-TD2	EA	MOLDING - TRIM - W/NOTCH - 1" X 86.3" - WASHED MAPLE
1C	M09520-19-TD3	EA	MOLDING - TRIM - W/NOTCH - 1" X 86.3" - HONEY CHERRY
1C	M09525-27-UF1	EA	MOLDING - HARDWOOD - .75" X 1.4" X 32.4" - CONCERT CHERRY
1C	M09525-27-UF2	EA	MOLDING - HARDWOOD - .75" X 1.4" X 32.4" - WASHED MAPLE
1C	M09525-27-UF3	EA	MOLDING - HARDWOOD - .75" X 1.4" X 32.4" - SIERRA MAPLE
2C	M09511-46-T77	EA	MOLDING/TRIM - .5" X 1.5" X 86.5" - PORTSMOUTH OAK
2C	M09511-46-T78	EA	MOLDING/TRIM - .5" X 1.5" X 86.5" - CONCERT CHERRY
2C	M09511-46-T79	EA	MOLDING/TRIM - .5" X 1.5" X 86.5" - WASHED MAPLE
2C	M09511-46-T80	EA	MOLDING/TRIM - .5" X 1.5" X 86.5" - SIERRA MAPLE
3C	M09471-79-R38	EA	MOLDING - TRIM/COVE - .8" X .8" X 96" - PORTSMOUTH OAK
3C	M09471-79-R39	EA	MOLDING - TRIM/COVE - .8" X .8" X 96" - CONCERT CHERRY
3C	M09471-79-R46	EA	MOLDING - TRIM/COVE - .8" X .8" X 96" - WASHED MAPLE
3C	M09471-79-RE0	EA	MOLDING - TRIM/COVE - .8" X .8" X 96" - HONEY CHERRY
3C	M09471-79-SA3	EA	MOLDING - TRIM/COVE - .8" X .8" X 96" - SIERRA MAPLE
4C	M09511-38-T89	EA	MOLDING - TRIM/FLUTED - 5" X 91.8" - PORTSMOUTH OAK
4C	M09511-38-T90	EA	MOLDING - TRIM/FLUTED - 5" X 91.8" - CONCERT CHERRY
4C	M09511-38-T91	EA	MOLDING - TRIM/FLUTED - 5" X 91.8" - WASHED MAPLE
4C	M09511-38-T92	EA	MOLDING - TRIM/FLUTED - 5" X 91.8" - SIERRA MAPLE
5C	Y00223-42-438	EA	MOLDING - HARDWOOD/OAK - .7" X 1" X 96"
5C	Y00223-32-438	EA	MOLDING - HARDWOOD/CHERRY - .7" X 1" X 96"
5C	Y00223-22-438	EA	MOLDING - HARDWOOD/MAPLE - .7" X 1" X 96"
6C	Y00258-72-438	EA	MOLDING/VINYL WRAP-BEVELED-.73" X 3.1" X 96" - PORTSMOUTH OAK
6C	Y00258-62-438	EA	MOLDING/VINYL WRAP-BEVELED-.73" X 3.1" X 96" - CONCERT CHERRY
6C	Y00258-A2-438	EA	MOLDING/VINYL WRAP-BEVELED ENDS-.73"X3.1"X96" - WASHED MAPLE
6C	Y00258-92-438	EA	MOLDING/VINYL WRAP-BEVELED-.73" X 3.1" X 96" - SIERRA MAPLE
7C	Y00259-72-438	EA	MOLDING/VINYL WRAP-BEVELED-.73" X 1.8" X 96" - PORTSMOUTH OAK
7C	Y00259-62-438	EA	MOLDING/VINYL WRAP-BEVELED-.73" X 1.8" X 96" - CONCERT CHERRY
7C	Y00259-A2-438	EA	MOLDING/VINYL WRAP-BEVELED-.73"X1.8"X96" - WASHED MAPLE
7C	Y00259-92-438	EA	MOLDING/VINYL WRAP-BEVELED-.73"X1.8"X96" - SIERRA MAPLE
8C	Y00331-72-438	EA	MOLDING/TRIM - VINYL - .7" X 5.5" X 96" - PORTSMOUTH OAK
8C	Y00331-62-438	EA	MOLDING/TRIM - VINYL - .7" X 5.5" X 96" - CONCERT CHERRY
8C	Y00331-A2-438	EA	MOLDING/TRIM - VINYL - .7" X 5.5" X 96" - WASHED MAPLE
8C	Y00331-92-438	EA	MOLDING/TRIM - VINYL - .7" X 5.5" X 96" - SIERRA MAPLE

COPYRIGHT © 2006 WINNEBAGO INDUSTRIES INC.

INTERIOR FINISH GROUP (CONTINUED)

MOLDINGS & TRIMS (CONTINUED)

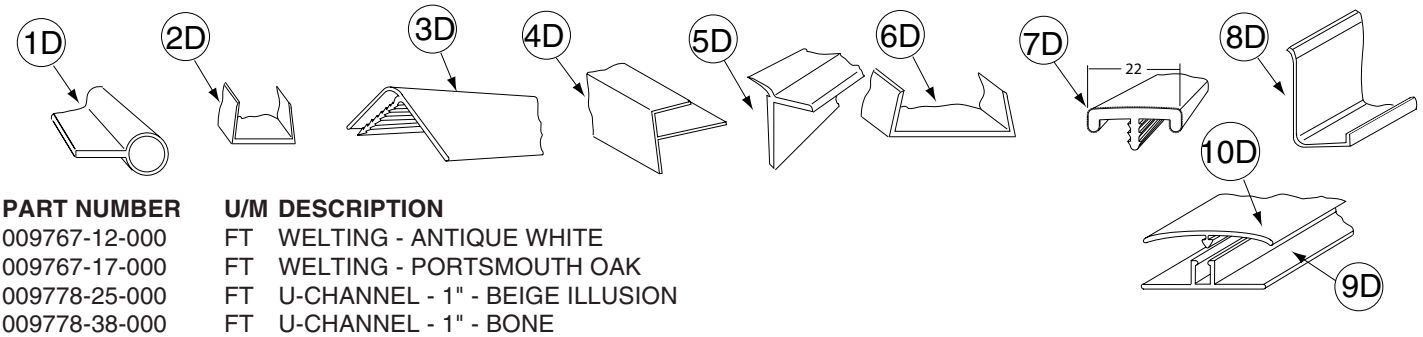

KEY	PART NUMBER	U/M	DESCRIPTION
1D	009767-12-000	FT	WELTING - ANTIQUE WHITE
1D	009767-17-000	FT	WELTING - PORTSMOUTH OAK
2D	009778-25-000	FT	U-CHANNEL - 1" - BEIGE ILLUSION
2D	009778-38-000	FT	U-CHANNEL - 1" - BONE
2D	009778-32-000	FT	U-CHANNEL - 1" - PORTSMOUTH OAK
2D	009778-34-000	FT	U-CHANNEL - 1" - CONCERT CHERRY
2D	009778-27-000	FT	U-CHANNEL - 1" - WASHED MAPLE
2D	009778-35-000	FT	U-CHANNEL - 1" - HONEY CHERRY
2D	009778-36-000	FT	U-CHANNEL - 1" - SIERRA MAPLE
3D	009809-30-000	EA	MOLDING - CORNER - OUTSIDE - 1" X 84" - BEIGE ILLUSION
3D	009809-37-000	EA	MOLDING - CORNER - OUTSIDE - 1" X 84" - BONE
3D	009809-32-000	EA	MOLDING - CORNER - OUTSIDE - 1" X 84" - PORTSMOUTH OAK
3D	009809-33-000	EA	MOLDING - CORNER - OUTSIDE - 1" X 84" - CONCERT CHERRY
3D	009809-31-000	EA	MOLDING - CORNER - OUTSIDE - 1" X 84" - WASHED MAPLE
3D	009809-34-000	EA	MOLDING - CORNER - OUTSIDE - 1" X 84" - HONEY CHERRY
3D	009809-35-000	EA	MOLDING - CORNER - OUTSIDE - 1" X 84" - SIERRA MAPLE
4D	009812-31-000	EA	MOLDING - CORNER - 1/2" W/1/4"CHAN X 84" - BEIGE ILLUSION
4D	009812-40-000	EA	MOLDING - CORNER - 1/2" W/1/4"CHAN X 84" - BONE
4D	009812-35-000	EA	MOLDING - CORNER - 1/2" W/1/4"CHAN X 84" - PORTSMOUTH OAK
4D	009812-36-000	EA	MOLDING - CORNER - 1/2" W/1/4"CHAN X 84" - CONCERT CHERRY
4D	009812-33-000	EA	MOLDING - CORNER - 1/2" W/1/4"CHAN X 84" - WASHED MAPLE
4D	009812-37-000	EA	MOLDING - CORNER - 1/2" W/1/4"CHAN X 84" - HONEY CHERRY
4D	009812-38-000	EA	MOLDING - CORNER - 1/2" W/1/4"CHAN X 84" - SIERRA MAPLE
5D	022992-11-000	FT	MOLDING - REVERSE COVE - T-SHAPED - IVORY
5D	022992-18-000	FT	MOLDING - REVERSE COVE - T-SHAPED - BONE
5D	022992-14-000	FT	MOLDING - REVERSE COVE - T-SHAPED - BRIGHT WHITE
6D	070504-42-000	FT	U-CHANNEL - PLASTIC - .13" X 84" - BEIGE ILLUSION
6D	070504-69-000	FT	U-CHANNEL - PLASTIC - .13" X 84" - BONE
6D	070504-43-000	FT	U-CHANNEL - PLASTIC - .9" X 96" - BEIGE ILLUSION
6D	070504-70-000	FT	U-CHANNEL - PLASTIC - .8" X 84" - BONE
6D	070504-57-000	FT	U-CHANNEL - PLASTIC - .13" X 84" - PORTSMOUTH OAK
6D	070504-58-000	FT	U-CHANNEL - PLASTIC - .9" X 84" - PORTSMOUTH OAK
6D	070504-60-000	FT	U-CHANNEL - PLASTIC - .13" X 84" - CONCERT CHERRY
6D	070504-61-000	FT	U-CHANNEL - PLASTIC - .9" X 84" - CONCERT CHERRY
6D	070504-50-000	FT	U-CHANNEL - PLASTIC - .13" X 96" - WASHED MAPLE
6D	070504-51-000	FT	U-CHANNEL - PLASTIC - .9" X 96" - WASHED MAPLE
6D	070504-62-000	FT	U-CHANNEL - PLASTIC - 1.65" X 84" - HONEY CHERRY
6D	070504-63-000	FT	U-CHANNEL - PLASTIC - .9" X 84" - HONEY CHERRY
6D	070504-65-000	FT	U-CHANNEL - PLASTIC - 1.65" X 84" - SIERRA MAPLE
6D	070504-66-000	FT	U-CHANNEL - PLASTIC - .9" X 84" - SIERRA MAPLE
7D	083620-15-000	FT	MOLDING-T - W/EDGE LIP - 7/8" FACE - BEIGE ILLUSION
7D	083620-25-000	FT	MOLDING-T - W/EDGE LIP - 7/8" FACE - BONE
7D	083620-20-000	FT	MOLDING-T - W/EDGE LIP - 7/8" FACE - PORTSMOUTH OAK
7D	083620-21-000	FT	MOLDING-T - W/EDGE LIP - 7/8" FACE - CONCERT CHERRY/HONEY CHERRY
7D	083620-19-000	FT	MOLDING-T - W/EDGE LIP - 7/8" FACE - WASHED MAPLE
7D	083620-22-000	FT	MOLDING-T - W/EDGE LIP - 7/8" FACE - SIERRA MAPLE
8D	085746-04-000	FT	TRIM-J - CARPET 1.2" X .5" ANGLE - 12' LONG - OFF WHITE
9D	086229-01-000	EA	RETAINER - BATTEN - .75" X 92.1" - ANY COLOR
10D	086229-20-000	EA	BATTEN - 1" X 96" - BEIGE

COPYRIGHT © 2006 WINNEBAGO INDUSTRIES INC.

INTERIOR FINISH GROUP (CONTINUED)

MOLDINGS & TRIMS (CONTINUED)

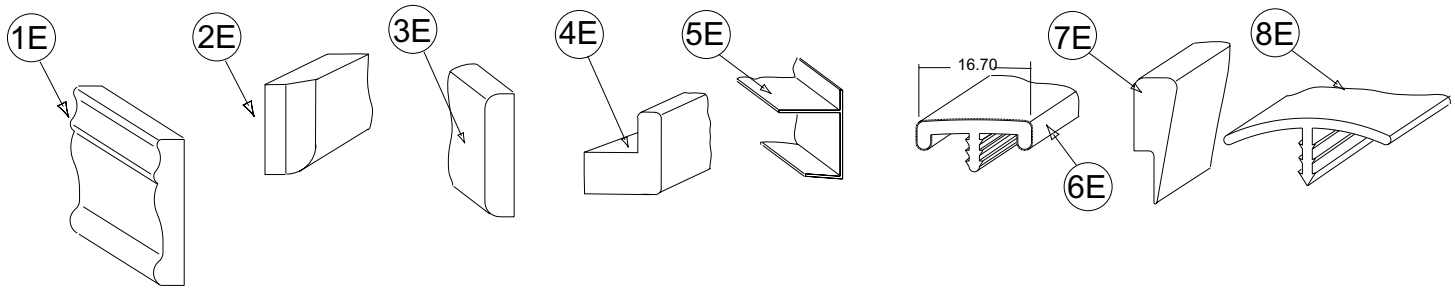

KEY	PART NUMBER	U/M	DESCRIPTION
1E	100182-10-N47	EA	TRIM/WOOD - CHAIR RAIL - 2.5" X 8' - PORTSMOUTH OAK
1E	100182-10-P85	EA	TRIM/WOOD - CHAIR RAIL - 2.5" X 8' - CONCERT CHERRY
1E	100182-10-J70	EA	TRIM/WOOD - CHAIR RAIL - 2.5" X 8' - WASHED MAPLE
1E	100182-10-RA3	EA	TRIM/WOOD - CHAIR RAIL - 2.5" X 8' - HONEY CHERRY
1E	100182-10-S67	EA	TRIM/WOOD - CHAIR RAIL - 2.5" X 8' - SIERRA MAPLE
2E	100659-30-N75	EA	MOLDING - TRIM - 8' - PORTSMOUTH OAK
2E	100659-30-N74	EA	MOLDING - TRIM - 8' - CONCERT CHERRY
2E	100659-30-M84	EA	MOLDING - TRIM - 8' - WASHED MAPLE
2E	100659-27-RA3	EA	MOLDING - TRIM - HONEY CHERRY
2E	100659-31-SA3	EA	MOLDING - TRIM - SIERRA MAPLE
3E	100818-01-12A	EA	MOLDING - VINYL WRAPPED - 1.6" X .4" X 84" - PORTSMOUTH OAK
3E	100818-01-13A	EA	MOLDING - VINYL WRAPPED - 1.6" X .4" X 84" - CONCERT CHERRY
3E	100818-01-21A	EA	MOLDING - VINYL WRAPPED - 1.6" X .4" X 84" - WASHED MAPLE
3E	100818-01-14A	EA	MOLDING - VINYL WRAPPED - 1.6" X .4" X 84" - HONEY CHERRY
3E	100818-01-22A	EA	MOLDING - VINYL WRAPPED - 1.6" X .4" X 84" - SIERRA MAPLE
4E	100819-01-12A	EA	MOLDING - VINYL WRAPPED-L-SHAPED-1.5"X1.5"X84" - PORTSMOUTH OAK
4E	100819-01-13A	EA	MOLDING - VINYL WRAPPED-L-SHAPED-1.5"X1.5"X84" - CONCERT CHERRY
4E	100819-01-21A	EA	MOLDING - VINYL WRAPPED-L-SHAPED-1.5"X1.5"X84" - WASHED MAPLE
4E	100819-01-14A	EA	MOLDING - VINYL WRAPPED-L-SHAPED-1.5"X1.5"X84" - HONEY CHERRY
4E	100819-01-22A	EA	MOLDING - VINYL WRAPPED-L-SHAPED-1.5"X1.5"X84" - SIERRA MAPLE
5E	103186-01-07A	FT	MOLDING/PLASTIC - 3/8" U-CHANNEL-3/4" FACE -BEIGE ILLUSION
5E	103186-01-09A	FT	MOLDING/PLASTIC - 3/8" U-CHAN'L-3/4" FACE - PORTSMOUTH OAK
5E	103186-01-10A	FT	MOLDING/PLASTIC - 3/8" U-CHAN'L-3/4" FACE - CONCERT CHERRY
5E	103186-01-08A	FT	MOLDING/PLASTIC - 3/8" U-CHANNEL-3/4"FACE-WASHED MAPLE 8' - WASHED MAPLE
5E	103186-01-11A	FT	MOLDING/PLASTIC - 3/8" U-CHAN'L-3/4" FACE - HONEY CHERRY
5E	103186-01-12A	FT	MOLDING/PLASTIC - 3/8" U-CHAN'L-3/4" FACE - SIERRA MAPLE
5E	103186-02-07A	FT	MOLDING/PLASTIC-1" U-CHAN'L-1 3/8" FACE - BEIGE ILLUSION
5E	103186-02-09A	FT	MOLDING/PLASTIC - 1" U-CHAN'L-1 3/8" FACE - PORTSMOUTH OAK
5E	103186-02-10A	FT	MOLDING/PLASTIC - 1" U-CHAN'L-1 3/8" FACE - CONCERT CHERRY
5E	103186-02-08A	FT	MOLDING/PLASTIC - 1" U-CHANNEL-1 3/8"FACE - WASHED MAPLE
5E	103186-02-11A	FT	MOLDING/PLASTIC - 1" U-CHAN'L-1 3/8" FACE - HONEY CHERRY
5E	103186-02-12A	FT	MOLDING/PLASTIC - 1" U-CHAN'L-1 3/8" FACE - SIERRA MAPLE
6E	104676-02-08A	FT	MOLDING-T - W/EDGE LIP - 11/16" FACE - PORTSMOUTH OAK
6E	104676-02-09A	FT	MOLDING-T - W/EDGE LIP - 11/16" FACE - CONCERT CHERRY
6E	104676-02-06A	FT	MOLDING-T - W/EDGE LIP - 11/16" FACE - WASHED MAPLE
6E	104676-02-10A	FT	MOLDING-T - W/EDGE LIP - 11/16" FACE - HONEY CHERRY
6E	104676-02-12A	FT	MOLDING-T - W/EDGE LIP - 11/16" FACE - SIERRA MAPLE
6E	105004-01-12A	EA	MOLDING - VINYL WRAPPED - 1" X 96" - PORTSMOUTH OAK
6E	105004-01-13A	EA	MOLDING - VINYL WRAPPED 1" X 8' - CONCERT CHERRY
6E	105004-01-21A	EA	MOLDING - VINYL WRAPPED - 1" X 8' - WASHED MAPLE
6E	105004-01-22A	EA	MOLDING - VINYL WRAPPED - 1" X 8' - SIERRA MAPLE
8E	105709-02-000	FT	MOLDING-T - W/EDGE LIP 3/4" FACE - BEIGE ILLUSION

COPYRIGHT © 2006 WINNEBAGO INDUSTRIES INC.

INTERIOR FINISH GROUP (CONTINUED)

MOLDINGS & TRIMS (CONTINUED)

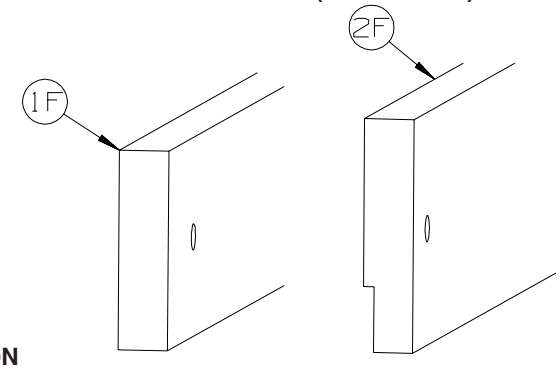

KEY	PART NUMBER	U/M	DESCRIPTION
1F	116951-45-R68	EA	MOLDING - TRIM - 3" X 30.3" - PORTSMOUTH OAK
1F	116951-45-R69	EA	MOLDING - TRIM - 3" X 30.3" - CONCERT CHERRY
1F	116951-45-R76	EA	MOLDING - TRIM - 3" X 30.3" - WASHED MAPLE
1F	116951-45-SA3	EA	MOLDING - TRIM - 3" X 30.3" - SIERRA MAPLE
2F	116951-37-R68	EA	MOLDING - TRIM - 3.5" X 38.6" - PORTSMOUTH OAK
2F	116951-37-R69	EA	MOLDING - TRIM - 3.5" X 38.6" - CONCERT CHERRY
2F	116951-37-R76	EA	MOLDING - TRIM - 3.5" X 38.6" - WASHED MAPLE
2F	116951-37-SA3	EA	MOLDING - TRIM - 3.5" X 38.6" - SIERRA MAPLE
2F	116951-51-SA0	EA	MOLDING - TRIM - 3.5" X 47.3" - PORTSMOUTH OAK
2F	116951-51-SA1	EA	MOLDING - TRIM - 3.5" X 47.3" - CONCERT CHERRY
2F	116951-51-SA2	EA	MOLDING - TRIM - 3.5" X 47.3" - WASHED MAPLE
2F	116951-51-SA3	EA	MOLDING - TRIM - 3.5" X 47.3" - SIERRA MAPLE
2F	116951-55-TD0	EA	MOLDING - TRIM - 4.5" X 52.3" - PORTSMOUTH OAK
2F	116951-55-TD1	EA	MOLDING - TRIM - 4.5" X 52.3" - CONCERT CHERRY
2F	116951-55-TD2	EA	MOLDING - TRIM - 4.5" X 52.3" - WASHED MAPLE
2F	116951-55-TD3	EA	MOLDING - TRIM - 4.5" X 52.3" - SIERRA MAPLE
2F	116951-56-TD0	EA	MOLDING - TRIM - 4.5" X 52.3" - PORTSMOUTH OAK
2F	116951-56-TD1	EA	MOLDING - TRIM - 4.5" X 52.3" - CONCERT CHERRY
2F	116951-56-TD2	EA	MOLDING - TRIM - 4.5" X 52.3" - WASHED MAPLE
2F	116951-56-TD3	EA	MOLDING - TRIM - 4.5" X 52.3" - SIERRA MAPLE

COPYRIGHT © 2006 WINNEBAGO INDUSTRIES INC.

INTERIOR FINISH GROUP (CONTINUED)

MOLDINGS & TRIMS (CONTINUED)

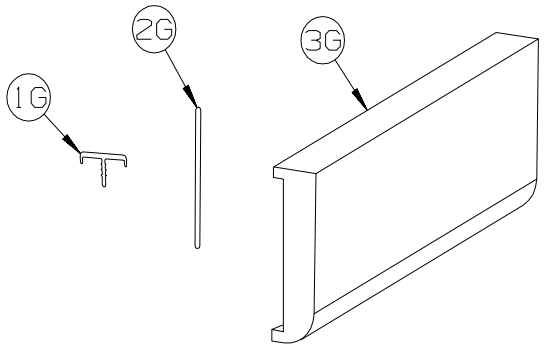

KEY	PART NUMBER	U/M	DESCRIPTION
1G	119520-01-01A	FT	MOLDING-T - OFFSET W/EDGE LIP - 1.3" FACE - OFF WHITE
1G	119520-01-04A	FT	MOLDING-T - OFFSET W/EDGE LIP - 1.3" FACE - PORTSMOUTH OAK
1G	119520-01-02A	FT	MOLDING-T - OFFSET W/EDGE LIP - 1.3" FACE - CONCERT CHERRY
1G	119520-01-03A	FT	MOLDING-T - OFFSET W/EDGE LIP - 1.3" FACE - WASHED MAPLE
1G	119520-01-05A	FT	MOLDING-T - OFFSET W/EDGE LIP - 1.3" FACE - SIERRA MAPLE
1G	119520-03-03A	FT	MOLDING-T - OFFSET W/EDGE LIP - 1" FACE - WASHED MAPLE
1G	119520-03-06A	FT	MOLDING-T - OFFSET W/EDGE LIP - 1" FACE - HONEY CHERRY
2G	127842-01-01A	FT	SEAL - SIGHT SHIELD - 2" BLACK
	137885-A2-438	EA	LUMBER - VINYL WRAPPED - .7" X .75" X 96" - CONCERT CHERRY
	137885-D2-438	EA	LUMBER - VINYL WRAPPED - .7" X 1.5" X 96" - CONCERT CHERRY
	137885-E2-438	EA	LUMBER - VINYL WRAPPED - .7" X 2" X 96" - CONCERT CHERRY
	137885-F2-438	EA	LUMBER - VINYL WRAPPED - .7" X 2.5" X 96" - CONCERT CHERRY
	137885-G2-438	EA	LUMBER - VINYL WRAPPED - .7" X 3" X 96" - CONCERT CHERRY
	137885-H2-438	EA	LUMBER - VINYL WRAPPED - .7" X 3.5" X 96" - CONCERT CHERRY
	137885-J2-438	EA	LUMBER - VINYL WRAPPED - .7" X 5.5" X 96" - CONCERT CHERRY
	137885-J2-743	EA	LUMBER - VINYL WRAPPED - .7" X 5.5" X 108" - CONCERT CHERRY
	137885-K2-438	EA	LUMBER - VINYL WRAPPED - .7" X 3.9" X 96" - CONCERT CHERRY
	137885-R2-438	EA	LUMBER - VINYL WRAPPED - .7" X 3" X 96" - CONCERT CHERRY
3G	137887-D2-134	EA	MOLDING - VINYL WRAPPED - .7" X 1.6" X 84" - CONCERT CHERRY
3G	137887-D2-743	EA	MOLDING - VINYL WRAPPED - .7" X 1.6" X 108" - CONCERT CHERRY
3G	137887-F2-134	EA	MOLDING - VINYL WRAPPED - .7" X 2.5" X 84" - CONCERT CHERRY
3G	137887-F2-743	EA	MOLDING - VINYL WRAPPED - .7" X 2.5" X 108" - CONCERT CHERRY
3G	137887-F2-438	EA	MOLDING - VINYL WRAPPED - .7" X 2.5" X 96" - CONCERT CHERRY
	137894-A2-438	EA	LUMBER - VINYL WRAPPED - .7" X .75" X 96" - PORTSMOUTH OAK
	137894-D2-438	EA	LUMBER - VINYL WRAPPED - .7" X 1.5" X 96" - PORTSMOUTH OAK
	137894-E2-438	EA	LUMBER - VINYL WRAPPED - .7" X 2" X 96" - PORTSMOUTH OAK
	137894-F2-438	EA	LUMBER - VINYL WRAPPED - .7" X 2.5" X 96" - PORTSMOUTH OAK
	137894-G2-438	EA	LUMBER - VINYL WRAPPED - .7" X 3" X 96" - PORTSMOUTH OAK
	137894-H2-438	EA	LUMBER - VINYL WRAPPED - .7" X 3.5" X 96" - PORTSMOUTH OAK
	137894-J2-438	EA	LUMBER - VINYL WRAPPED - .7" X 5.5" X 96" - PORTSMOUTH OAK
	137894-J2-743	EA	LUMBER - VINYL WRAPPED - .7" X 5.5" X 96" - PORTSMOUTH OAK
	137894-K2-438	EA	LUMBER - VINYL WRAPPED - .7" X 3.9" X 96" - PORTSMOUTH OAK
	137894-R2-438	EA	LUMBER - VINYL WRAPPED - .7" X 3" X 96" - PORTSMOUTH OAK
3G	137895-D2-134	EA	MOLDING - VINYL WRAPPED - .7" X 1.6" X 84"-PORTSMOUTH OAK
3G	137895-D2-743	EA	MOLDING - VINYL WRAPPED - .7" X 1.6" X 108"-PORTSMOUTH OAK
3G	137895-F2-438	EA	MOLDING - VINYL WRAPPED - .7" X 2.5" X 96" - PORTSMOUTH OAK
3G	137895-F2-743	EA	MOLDING - VINYL WRAPPED - .7" X 2.5" X 108" - PORTSMOUTH OAK
	146419-A2-438	EA	LUMBER - VINYL WRAPPED - .7" X .75" X 96" - HONEY CHERRY
	146419-D2-438	EA	LUMBER - VINYL WRAPPED - .7" X 1.5" X 96" - HONEY CHERRY
	146419-E2-438	EA	LUMBER - VINYL WRAPPED - .7" X 2" X 96" - HONEY CHERRY
	146419-F2-438	EA	LUMBER - VINYL WRAPPED - .7" X 2.5" X 96" - HONEY CHERRY
	146419-G2-438	EA	LUMBER - VINYL WRAPPED - .7" X 3" X 96" - HONEY CHERRY
	146419-H2-438	EA	LUMBER - VINYL WRAPPED - .7" X 3.5" X 96" - HONEY CHERRY
	146419-J2-438	EA	LUMBER - VINYL WRAPPED - .7" X 5.5" X 96" - HONEY CHERRY
	146419-J2-743	EA	LUMBER - VINYL WRAPPED - .7" X 5.5" X 108" - HONEY CHERRY
	146419-K2-438	EA	LUMBER - VINYL WRAPPED - .7" X 3.9" X 96" - HONEY CHERRY
	146419-R2-438	EA	LUMBER - VINYL WRAPPED - .7" X 3" X 96" - HONEY CHERRY
3G	146425-D2-134	EA	MOLDING - VINYL WRAPPED - .7" X 1.6" X 83.9" - HONEY CHERRY
3G	146425-F2-438	EA	MOLDING - VINYL WRAPPED - .7" X 2.6" X 96" - HONEY CHERRY

COPYRIGHT © 2006 WINNEBAGO INDUSTRIES INC.

INTERIOR FINISH GROUP (CONTINUED)

MOLDINGS & TRIMS (CONTINUED)

KEY	PART NUMBER	U/M	DESCRIPTION
	149325-A2-438	EA	LUMBER - VINYL WRAPPED - .7" X .75" X 96" - WASHED MAPLE
	149325-D2-438	EA	LUMBER - VINYL WRAPPED - .7" X 1.5" X 96" - WASHED MAPLE
	149325-E2-438	EA	LUMBER - VINYL WRAPPED - .7" X 2" X 96" - WASHED MAPLE
	149325-F2-438	EA	LUMBER - VINYL WRAPPED - .7" X 2.5" X 96" - WASHED MAPLE
	149325-G2-438	EA	LUMBER - VINYL WRAPPED - .7" X 3" X 96" - WASHED MAPLE
	149325-H2-438	EA	LUMBER - VINYL WRAPPED - .7" X 3.5" X 96" - WASHED MAPLE
	149325-J2-438	EA	LUMBER - VINYL WRAPPED - .7" X 5.5" X 96" - WASHED MAPLE
	149325-J2-743	EA	LUMBER - VINYL WRAPPED - .7" X 5.5" X 108" - WASHED MAPLE
	149325-K2-438	EA	LUMBER - VINYL WRAPPED - .7" X 3.9" X 96" - WASHED MAPLE
	149325-R2-438	EA	LUMBER - VINYL WRAPPED - .7" X 3" X 96" - WASHED MAPLE
3G	149326-D2-134	EA	MOLDING - VINYL WRAPPED - .7" X 1.5" X 83.9" - WASHED MAPLE
3G	149326-D2-743	EA	MOLDING - VINYL WRAPPED - .7" X 1.5" X 108" - WASHED MAPLE
3G	149326-F2-134	EA	MOLDING - VINYL WRAPPED - .7" X 2.5" X 83.9" - WASHED MAPLE
3G	149326-F2-438	EA	MOLDING - VINYL WRAPPED - .7" X 2.5" X 96" - WASHED MAPLE
3G	149326-F2-743	EA	MOLDING - VINYL WRAPPED - .7" X 2.5" X 108" - WASHED MAPLE
	149330-A2-438	EA	LUMBER - VINYL WRAPPED - .7" X .75" X 96" - SIERRA MAPLE
	149330-D2-438	EA	LUMBER - VINYL WRAPPED - .7" X 1.5" X 96" - SIERRA MAPLE
	149330-E2-438	EA	LUMBER - VINYL WRAPPED - .7" X 2" X 96" - SIERRA MAPLE
	149330-F2-438	EA	LUMBER - VINYL WRAPPED - .7" X 2.5" X 96" - SIERRA MAPLE
	149330-G2-438	EA	LUMBER - VINYL WRAPPED - .7" X 3" X 96" - SIERRA MAPLE
	149330-H2-438	EA	LUMBER - VINYL WRAPPED - .7" X 3.5" X 96" - SIERRA MAPLE
	149330-J2-438	EA	LUMBER - VINYL WRAPPED - .7" X 5.5" X 96" - SIERRA MAPLE
	149330-J2-743	EA	LUMBER - VINYL WRAPPED - .7" X 5.5" X 108" - SIERRA MAPLE
	149330-K2-438	EA	LUMBER - VINYL WRAPPED - .7" X 3.9" X 96" - SIERRA MAPLE
	149330-R2-438	EA	LUMBER - VINYL WRAPPED - .7" X 3" X 96" - SIERRA MAPLE
3G	149331-D2-134	EA	MOLDING - VINYL WRAPPED - .7" X 1.5" X 83.9" - SIERRA MAPLE
3G	149331-D2-743	EA	MOLDING - VINYL WRAP - .7" X 1.5" X 108" - SIERRA MAPLE
3G	149331-F2-134	EA	MOLDING - VINYL WRAPPED - .7" X 2.5" X 83.9" - SIERRA MAPLE
3G	149331-F2-438	EA	MOLDING - VINYL WRAPPED - .7" X 2.5" X 96" - SIERRA MAPLE
3G	149331-F2-743	EA	MOLDING - VINYL WRAPPED - .7" X 2.5" X 108" - SIERRA MAPLE

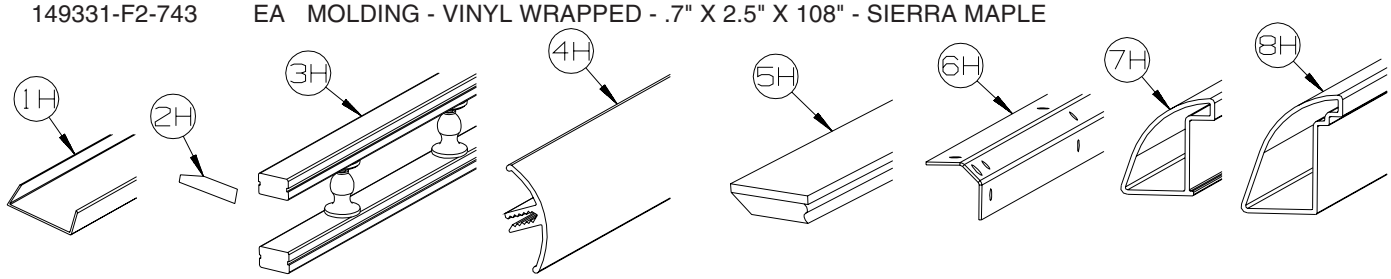

KEY	PART NUMBER	U/M	DESCRIPTION
1H	141260-01-01A	FT	U-CHANNEL - 1" - VILLAGE OAK - PORTSMOUTH OAK/WASHED MAPLE/SIERRA MAPLE
1H	141260-01-02A	FT	U-CHANNEL - 1" - GRADY BROWN - CONCERT CHERRY/HONEY CHERRY
1H	141260-02-01A	FT	U-CHANNEL - 1 1/8" - VILLAGE OAK - PORTSMOUTH OAK/WASHED MAPLE/SIERRA MAPLE
1H	141260-02-02A	FT	U-CHANNEL - 1 1/8" - GRADY BROWN - CONCERT CHERRY/HONEY CHERRY
2H	146306-01-01A	FT	TRANSITION - CARPET/TILE
3H	150167-01-07A	EA	RAIL - DECORATIVE - 96" W/O REVERSE SIDE GROOVE - PORTSMOUTH OAK
3H	150167-01-02A	EA	RAIL - DECORATIVE - 96" W/O REVERSE SIDE GROOVE - SALEM CHERRY - CONCERT CHERRY
3H	150167-01-03A	EA	RAIL - DECORATIVE - 96" W/O REVERSE SIDE GROOVE - WASHED MAPLE
3H	150167-01-09A	EA	RAIL - DECORATIVE - 96" W/O REVERSE SIDE GROOVE - SIERRA MAPLE
4H	151653-10-01A	EA	TRIM/RADIUS - CABINET CORNER - 79.6" - HAMMER TONE SILVER
4H	151653-10-02A	EA	TRIM/RADIUS - CABINET CORNER - 79.6" - DULL METALLIC
5H	151676-26-S46	EA	MOLDING/TRIM - .75" X 1.6" X 80.2" - PORTSMOUTH OAK
5H	151676-26-S47	EA	MOLDING/TRIM - .75" X 1.6" X 80.2" - CONCERT CHERRY
5H	151676-26-S48	EA	MOLDING/TRIM - .75" X 1.6" X 80.2" - WASHED MAPLE
5H	151676-26-SR0	EA	MOLDING/TRIM - .75" X 1.6" X 80.2" - SIERRA MAPLE
6H	151861-05-02B	EA	ANGLE - SUPPORT/CORNER - 1.4" X 78.6" - E-COATED
7H	151893-01-01A	EA	TRIM/RADIUS - CABINET BOTTOM - 72.6" - HAMMER TONE SILVER
7H	151893-01-02A	EA	TRIM/RADIUS - CABINET BOTTOM - 72.6" - DULL METALLIC
8H	152077-01-01A	EA	TRIM/RADIUS - CABINET BOTTOM - 27.7" - HAMMER TONE SILVER
8H	152077-01-02A	EA	TRIM/RADIUS - CABINET BOTTOM - 27.7" - DULL METALLIC

COPYRIGHT © 2006 WINNEBAGO INDUSTRIES INC.

INTERIOR FINISH GROUP (CONTINUED)

PANELING & LAMINATES

KEY	PART NUMBER	U/M	DESCRIPTION
	000885-A5-000	SF	PARTICLE BOARD - 3/8" X 4' X 8'- WHT PEB EMBOSSED-1 SIDED FROM: 00-00-00 THRU: 05-15-05
	000885-C3-000	SF	PARTICLE BOARD - 3/8" X 4' X 8'- WHITE THATCHED-1 SIDED FROM: 05-16-05 THRU: 99-99-99
	000885-92-000	SF	PARTICLE BOARD - 3/8" X 4' X 8' - PORTSMOUTH OAK - 1 SIDED - PORTSMOUTH OAK
	000885-93-000	SF	PARTICLE BOARD - 3/8" X 4' X 8' - PORTSMOUTH OAK - 2 SIDED - PORTSMOUTH OAK
	000885-94-000	SF	PARTICLE BOARD - 1/2" X 4' X 8' - PORTSMOUTH OAK - 2 SIDED - PORTSMOUTH OAK
	000885-95-000	SF	PARTICLE BOARD - 3/4" X 4' X 8' - PORTSMOUTH OAK - 2 SIDED - PORTSMOUTH OAK
	000885-B8-000	SF	PARTICLE BOARD - 3/8" X 4' X 8'- NEW CONC CHERRY - 2 SIDED - CONCERT CHERRY
	000885-C1-000	SF	PARTICLE BOARD - 1/2" X 4' X 8'- NEW CONC CHERRY - 2 SIDED - CONCERT CHERRY
	000885-C0-000	SF	PARTICLE BOARD - 3/4" X 4' X 8'- NEW CONC CHERRY - 2 SIDED - CONCERT CHERRY
	000885-B4-000	SF	PARTICLE BOARD - 3/8" X 4' X 8'- WASHED MAPLE - 2 SIDED - WASHED MAPLE
	000885-B5-000	SF	PARTICLE BOARD - 3/8" X 4' X 8'- WASHED MAPLE - 1 SIDED - WASHED MAPLE
	000885-B6-000	SF	PARTICLE BOARD - 3/4" X 4' X 8'- WASHED MAPLE - 2 SIDED - WASHED MAPLE
	000885-B7-000	SF	PARTICLE BOARD - 1/2" X 4' X 8'- WASHED MAPLE - 2 SIDED - WASHED MAPLE
	000885-B1-000	SF	PARTICLE BOARD - 3/8" X 4' X 8' - SIERRA MAPLE - 1-SIDED - SIERRA MAPLE
	000885-B0-000	SF	PARTICLE BOARD - 3/8" X 4' X 8' - SIERRA MAPLE - 2-SIDED - SIERRA MAPLE
	000885-B2-000	SF	PARTICLE BOARD - 3/4" X 4' X 8' - SIERRA MAPLE - 2-SIDED - SIERRA MAPLE
	000885-B3-000	SF	PARTICLE BOARD - 1/2" X 4' X 8' - SIERRA MAPLE - 2-SIDED - SIERRA MAPLE
	057882-04-000	SF	TAMBOUR - 48" X 96" SHEET - UNFINISHED - PORTSMOUTH OAK
	057882-06-000	SF	TAMBOUR - 48" X 96" - SHEET - CONCERT CHERRY
	057882-05-000	SF	TAMBOUR - 48" X 96" SHEET - UNFINISHED - WASHED MAPLE/SIERRA MAPLE
	069733-87-000	EA	BATT STRIP - WOODGRAINED/PORTSMOUTH OAK - 8' - PORTSMOUTH OAK
	069733-88-000	EA	BATT STRIP - WOODGRAINED/SALEM CHERRYK - 8' - CONCERT CHERRY
	069733-89-000	EA	BATT STRIP - WOODGRAINED/WASHED MAPLE - 8' - WASHED MAPLE
	069733-90-000	EA	BATT STRIP - WOODGRAINED/SIERRA MAPLE - 8' - SIERRA MAPLE
	074498-40-000	SF	LAMINATE - PLASTIC - OFF WHITE - 4' X 8'
	074497-42-000	SF	PANELING - PORTSMOUTH OAK - 4' X 8' - PORTSMOUTH OAK
	074497-50-000	SF	PANELING - CONC CHERRY - 4' X 8' - CONCERT CHERRY
	074497-49-000	SF	PANELING - NEAT WASHED MAPLE - 4' X 8' - WASHED MAPLE
	074497-48-000	SF	PANELING - SIERRA MAPLE - 4' X 8' - SIERRA MAPLE
	074498-95-000	SF	LAMINATE - PLASTIC - PORTSMOUTH OAK - 4' X 8' - PORTSMOUTH OAK
	074498-96-000	SF	LAMINATE - PLASTIC - CHERRY - 4' X 8' - CONCERT CHERRY
	074498-A6-000	SF	LAMINATE - PLASTIC - NEAT WASHED MAPLE - 4' X 8' - WASHED MAPLE
	074498-A8-000	SF	LAMINATE - PLASTIC - SIERRA MAPLE - 4' X 8' - SIERRA MAPLE
	074498-A0-000	SF	LAMINATE - PLASTIC - ROCKY MOUNTAIN HIGH - 4' X 8'
	076325-78-000	FT	MOLDING - EDGEBAND - .93" X .024" - PORTSMOUTH OAK
	076325-79-000	FT	MOLDING - EDGEBAND - .93" X .024" - CONCERT CHERRY
	076325-82-000	FT	MOLDING - EDGEBAND - .93" X .024" - WASHED MAPLE
	076325-83-000	FT	MOLDING - EDGEBAND - .93" X .024" - SIERRA MAPLE
	076773-15-000	SF	PANELING - 2 SIDED/PORTSMOUTH OAK - 1/8" X 4' X 8' - PORTSMOUTH OAK
	076773-21-000	SF	PANELING - 2 SIDED/CONC CHERRY - 1/8" X 4' X 8' - CONCERT CHERRY
	076773-20-000	SF	PANELING - 2 SIDED/NEAT WASHED MAPLE - 1/8" X 4' X 8' - WASHED MAPLE
	076773-19-000	SF	PANELING - 2 SIDED/SIERRA MAPLE - 1/8" X 4' X 8' - SIERRA MAPLE
	079666-03-000	SF	PANELING - CLOSET - CEDAR - 4' X 7'
	080215-14-000	SF	PANELING - 2 SIDED - PORTSMOUTH OAK - 3/16" X 4' X 8' - PORTSMOUTH OAK
	080215-17-000	SF	PANELING - 2 SIDED - CONC CHERRY - 3/16" X 4' X 8' - CONCERT CHERRY
	080215-16-000	SF	PANELING - 2 SIDED/WASHED MAPLE - 3/16" X 4' X 8' - WASHED MAPLE
	080215-19-000	SF	PANELING - 2 SIDED/SIERRA MAPLE - 3/16" X 4' X 8' - SIERRA MAPLE
	085284-F7-000	FT	TAPE/STRIP - TRUE GRIP - 1 1/2" WIDE - ADHESIVE BACKED - BLACK
	085284-G8-000	FT	BATT TAPE - ADHESIVE BACKED - PORTSMOUTH OAK
	085284-J7-000	FT	BATT TAPE - ADHESIVE BACKED - CONC CHERRY - CONCERT CHERRY
	085284-H3-000	FT	BATT TAPE - ADHESIVE BACKED - DECORATIVE - WASHED MAPLE
	085284-J4-000	FT	BATT TAPE - ADHESIVE BACKED - DECORATIVE - SIERRA MAPLE
	085284-J2-000	FT	BATT TAPE - ADHESIVE BACKED - DECORATIVE - TAYLOR MINK (T89, T90, T91, T92) FROM: 00-00-00 THRU: 05-15-05
	085284-L0-000	FT	BATT TAPE - ADHESIVE BACKED - DECORATIVE - MINK (T89, T90, T91, T92) FROM: 05-16-05 THRU: 03-21-06
	085284-K7-000	FT	BATT TAPE - ADHESIVE BACKED - DECORATIVE - KURTA/CANVAS (T89, T90, T91, T92) FROM: 03-22-06 THRU: 99-99-99
	085284-J0-000	FT	BATT TAPE - ADHESIVE BACKED - DECORATIVE - FRANCISCO FERN (T93, T94, T95, T96)
	085284-K1-000	FT	BATT TAPE - ADHESIVE BACKED - DECORATIVE - MORITZ/TUSCANY (T97, T98, T99, T00)

COPYRIGHT © 2006 WINNEBAGO INDUSTRIES INC.

INTERIOR FINISH GROUP (CONTINUED)

PANELING & LAMINATES (CONTINUED)

KEY	PART NUMBER	U/M	DESCRIPTION
	088263-H9-000	EA	BATT STRIP - DECORATIVE - TAYLOR MINK (T89, T90, T91, T92) FROM: 00-00-00 THRU: 05-15-05
	088263-K6-000	EA	BATT STRIP - DECORATIVE - MINK (T89, T90, T91, T92) FROM: 05-16-05 THRU: 03-21-06
	088263-K3-000	EA	BATT STRIP - DECORATIVE - KURTA/CANVAS - 8' (T89, T90, T91, T92) FROM: 03-22-06 THRU: 99-99-99
	088263-H7-000	EA	BATT STRIP - DECORATIVE - FRANCISCO FERN (T93, T94, T95, T96)
	088263-J7-000	EA	BATT STRIP - DECORATIVE - MORITZ/TUSCANY (T97, T98, T99, T00)
	088272-H9-000	SF	PANELING - PEBBLE EMBOSSED - WHITE - 4' X 7' FROM: 00-00-00 THRU: 05-15-05
	088272-M9-000	SF	PANELING - WHITE THATCHED - WHITE - 4' X 7' FROM: 05-16-05 THRU: 99-99-99
	088272-L7-000	SF	PANELING - TAYLOR/MINK - 4' X 7.4' (T89, T90, T91, T92) FROM: 00-00-00 THRU: 05-15-05
	088272-N0-000	SF	PANELING - VENICE PLASTER/MINK - 4' X 7.4' (T89, T90, T91, T92) FROM: 05-16-05 THRU: 03-21-06
	088272-M7-000	SF	PANELING - KURTA/CANVAS - 4' X 7.4' (T89, T90, T91, T92) FROM: 03-22-06 THRU: 99-99-99
	088272-L9-000	SF	PANELING - FRANCISCO/FERN - 4' X 7.4' (T93, T94, T95, T96)
	088272-M1-000	SF	PANELING - MORITZ/TUSCANY - 4' X 7.4' (T97, T98, T99, T00)
	132610-05-30A	FT	WALLPAPER - BORDER - 7" - SELF-ADHESIVE (T89, T90, T91, T92)
	132610-05-36A	FT	WALLPAPER - BORDER - 7" - SELF-ADHESIVE (T93, T94, T95, T96)
	132510-05-37A	FT	WALLPAPER - BORDER - 7" - SELF-ADHESIVE (T97, T98, T99, T00)

COPYRIGHT © 2006 WINNEBAGO INDUSTRIES INC.

INTERIOR FINISH GROUP (CONTINUED)

INTERIOR TRIM LAYOUT

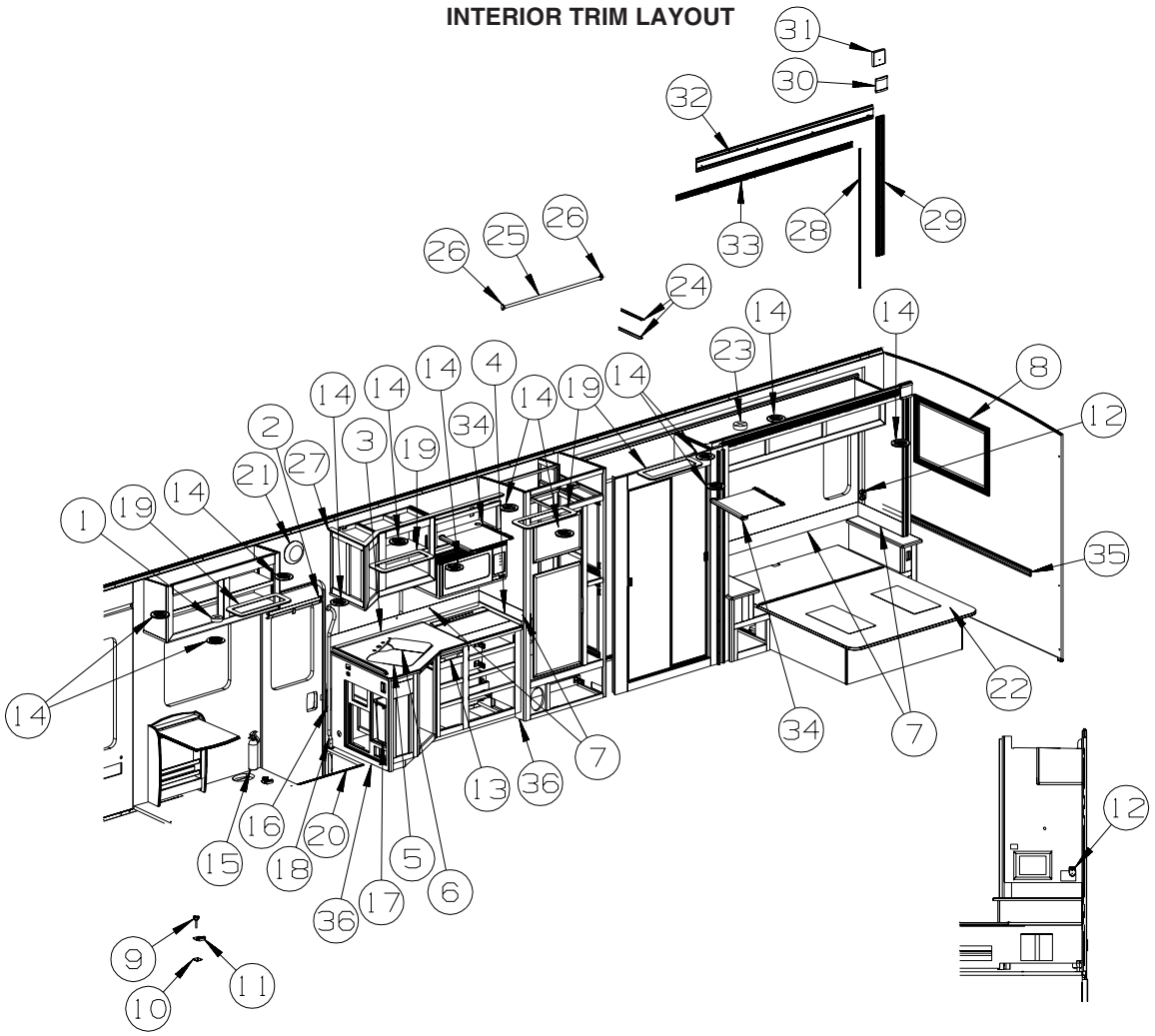

KEY	PART NUMBER	U/M	DESCRIPTION
1	072852-01-000	EA	DETECTOR - SMOKE - W/9 VOLT BATTERY - US
1	072852-02-000	EA	DETECTOR - SMOKE - W/9 VOLT BATTERY - CANADIAN
	077956-01-000	EA	LABEL - WARNING/SMOKE DETECTOR
2	144628-02-01A	EA	SHADE - SCREEN DOOR - 23" X 33.4" - BRIGHT WHITE
2	144628-02-02A	EA	SHADE - SCREEN DOOR - 23" X 33.4" - BLACK - FULL BODY PAINT
3	130813-05-06A	EA	BACKSPLASH/COUNTERTOP - 1/2" VENDURA - OATMEAL
4	130813-27-06A	EA	BACKSPLASH/COUNTERTOP - 1/2" VENDURA - OATMEAL
5	137489-01-05A	EA	COVER - SINK/LARGE - 13.8"X17"X1/4" VENDURA - OATMEAL
6	137489-02-05A	EA	COVER - SINK/SMALL - 9.6"X15.7"X1/4" VENDURA - OATMEAL
7	132610-05-30A	FT	WALLPAPER - BORDER - 7" - SELF-ADHESIVE (T89, T90, T91, T92)
7	132610-05-36A	FT	WALLPAPER - BORDER - 7" - SELF-ADHESIVE (T93, T94, T95, T96)
7	132610-05-37A	FT	WALLPAPER - BORDER - 7" - SELF-ADHESIVE (T97, T98, T99, T00)
8	149147-04-04A	EA	MIRROR - FRAMED - BEVELED - 41.5" X 25.5"-CHAMPAGNE SILVER
8	130120-01-01A	EA	BRACKET/MOUNTING - MIRROR
9	134194-01-01A	EA	KNOB - HOLD DOWN/RECLINER - BLACK
10	134128-02-02B	EA	PLATE - W/HOLES - W/WELDNUT - E-COATED
11	134057-01-11B	EA	BRACKET - RECLINER - FLAT BLACK
11	143956-02-04B	EA	BRACKET/TIEDOWN - EURO CHAIR - BLACK - LOUNGE CHAIR-EURO FROM: 00-00-00 THRU: 08-14-05
11	143956-03-04B	EA	BRACKET/TIEDOWN - EURO CHAIR - BLACK - LOUNGE CHAIR-EURO FROM: 08-15-05 THRU: 99-99-99
12	142411-05-000	EA	HOLDER - F/CONTROL (SELECT COMFORT) - SLEEP NUMBER BED-QUEEN SIZE
13	102778-03-000	EA	BOARD - CUTTING - .7" X 10" X 17.7" - WOOD
14	120134-01-02A	EA	REGISTER - W/DAMPER - 4" PIPE/6.4" O.D. FACE - WHITE
14	120134-02-01A	EA	REGISTER - TRIM RING - WHITE
15	094499-03-000	EA	EXTINGUISHER/FIRE - DRY - 10BC - W/GAUGE/BRACKET
15*	094499-02-000	EA	EXTINGUISHER/FIRE - DRY - 10BC - W/GAUGE - CANADIAN
15	094499-04-000	EA	STRAP - FIRE EXTINGUISHER MOUNTING - METAL
16	148362-01-01A	EA	COVER - BRACKET/STRIKE - BRIGHT WHITE

COPYRIGHT © 2006 WINNEBAGO INDUSTRIES INC.

INTERIOR FINISH GROUP (CONTINUED)

INTERIOR TRIM LAYOUT (CONTINUED)

KEY	PART NUMBER	U/M	DESCRIPTION
16	140151-02-02A	EA	COVER - SCREW - BRIGHT WHITE
17	130818-02-01A	EA	TRASH CONTAINER - 20 QUART ALMOND
18	131058-03-02A	EA	HAND RAIL - INTERIOR ENTRY DOOR - BLACK
19	149160-01-05A	EA	TRIM - LIGHT RING - PORTSMOUTH OAK
19	149160-01-01A	EA	TRIM - LIGHT RING - CONCERT CHERRY
19	149160-01-03A	EA	TRIM - LIGHT RING - WASHED MAPLE
19	149160-01-04A	EA	TRIM - LIGHT RING - SIERRA MAPLE
20	139955-06-02A	EA	TRIM - STEP/ENTRY - 29.3" - TITANIUM
21	142368-01-02A	EA	CLOCK - 8" ROUND - SATIN NICKEL
22	154430-02-000	EA	MATTRESS - INNERSPRING - 60" X 79.5"
22	142411-02-000	EA	MATTRESS/AIR - 60" X 80" - SELECT COMFORT - SLEEP NUMBER BED-QUEEN SIZE
22	142411-03-000	EA	AIR PUMP W/CONTROLS - F/SELECT COMFORT MATTRESS - SLEEP NUMBER BED-QUEEN SIZE
23	125136-02-000	EA	DETECTOR/CO - GAS MODEL - 9 VOLT
24	138359-01-01A	EA	COVER - ROOF BREAK - PEARL CREAM/PLASTIC - 96"
24	138403-01-01A	EA	TRIM - ROOF - MILL
25	Y00136-21-218	EA	DOWEL - WOOD - CLOTHES ROD - 1"DIAMETER X 4'
26	152301-01-01A	EA	FLANGE - PLASTIC - 1" CLOTHES ROD HOLDER - WHITE
27	152991-02-03A	EA	MOLDING/TRIM - OVERHEAD - 20.9"D X 67.7"L - PORTSMOUTH OAK
27	152991-02-01A	EA	MOLDING/TRIM - OVERHEAD - 20.9"D X 67.7"L - CONCERT CHERRY
27	152991-02-02A	EA	MOLDING/TRIM - OVERHEAD - 20.9"D X 67.7"L - WASHED MAPLE
27	152991-02-04A	EA	MOLDING/TRIM - OVERHEAD - 20.9"D X 67.7"L - SIERRA MAPLE
28	M09515-79-T89	EA	MOLDING/TRIM - FLUTED - 2.6" X 75.4" - PORTSMOUTH OAK - NOT ILLUSTRATED FROM: 00-00-00 THRU: 08-07-05
28	Y00326-72-438	EA	MOLDING - VINYL/CONCAVED - .7" X 96" - PORTSMOUTH OAK FROM: 08-08-05 THRU: 99-99-99
28	M09515-79-T90	EA	MOLDING/TRIM - FLUTED - 2.6" X 75.4" - CONCERT CHERRY - NOT ILLUSTRATED FROM: 00-00-00 THRU: 08-07-05
28	Y00326-62-438	EA	MOLDING - VINYL/CONCAVED - .7" X 96" - CONCERT CHERRY FROM: 08-08-05 THRU: 99-99-99
28	M09515-79-T91	EA	MOLDING/TRIM - FLUTED - 2.6" X 75.4" - WASHED MAPLE - NOT ILLUSTRATED FROM: 00-00-00 THRU: 08-07-05
28	Y00326-A2-438	EA	MOLDING - VINYL/CONCAVED - .7" X 96" - WASHED MAPLE FROM: 08-08-05 THRU: 99-99-99
28	M09515-79-T92	EA	MOLDING/TRIM - FLUTED - 2.6" X 75.4" - SIERRA MAPLE - NOT ILLUSTRATED FROM: 00-00-00 THRU: 08-07-05
28	Y00326-92-438	EA	MOLDING - VINYL/CONCAVED - .7" X 96" - SIERRA MAPLE FROM: 08-08-05 THRU: 99-99-99
29	Y00281-72-438	EA	MOLDING - SLIDEOUT/VINYL WRAP - 3.5"X 96" - PORTSMOUTH OAK - NOT ILLUSTRATED FROM: 00-00-00 THRU: 08-07-05
29	Y00328-72-438	EA	MOLDING - VINYL/CURVED - 3.5" X 96" - PORTSMOUTH OAK FROM: 08-08-05 THRU: 99-99-99
28	Y00281-62-438	EA	MOLDING - SLIDEOUT/VINYL WRAP - 3.5"X 96" - CONCERT CHERRY - NOT ILLUSTRATED FROM: 00-00-00 THRU: 08-07-05
29	Y00328-62-438	EA	MOLDING - VINYL/CURVED - 3.5" X 96" - CONCERT CHERRY FROM: 08-08-05 THRU: 99-99-99
29	Y00281-A2-438	EA	MOLDING - SLIDEOUT/VINYL WRAP - 3.5"X 96" - WASHED MAPLE - NOT ILLUSTRATED FROM: 00-00-00 THRU: 08-07-05
29	Y00328-A2-438	EA	MOLDING - VINYL/CURVED - 3.5" X 96" - WASHED MAPLE FROM: 08-08-05 THRU: 99-99-99
29	Y00281-92-438	EA	MOLDING - SLIDEOUT/VINYL WRAP - 3.5"X 96" - SIERRA MAPLE - NOT ILLUSTRATED FROM: 00-00-00 THRU: 08-07-05
29	Y00328-92-438	EA	MOLDING - VINYL/CURVED - 3.5" X 96" - SIERRA MAPLE FROM: 08-08-05 THRU: 99-99-99
30	153044-02-T89	EA	MOLDING/TRIM - SLIDEOUT - 3.7" X 4.2" - PORTSMOUTH OAK FROM: 00-00-00 THRU: 08-07-05
30	153044-04-TE4	EA	MOLDING/TRIM - SLIDEOUT - 5.1" X 4.7" - PORTSMOUTH OAK FROM: 08-08-05 THRU: 99-99-99
30	153044-02-T90	EA	MOLDING/TRIM - SLIDEOUT - 3.7" X 4.2" - CONCERT CHERRY FROM: 00-00-00 THRU: 08-07-05
30	153044-04-TE5	EA	MOLDING/TRIM - SLIDEOUT - 5.1" X 4.7" - CONCERT CHERRY FROM: 08-08-05 THRU: 99-99-99
30	153044-02-T91	EA	MOLDING/TRIM - SLIDEOUT - 3.7" X 4.2" - WASHED MAPLE FROM: 00-00-00 THRU: 08-07-05

COPYRIGHT © 2006 WINNEBAGO INDUSTRIES INC.

INTERIOR FINISH GROUP (CONTINUED)

INTERIOR TRIM LAYOUT (CONTINUED)

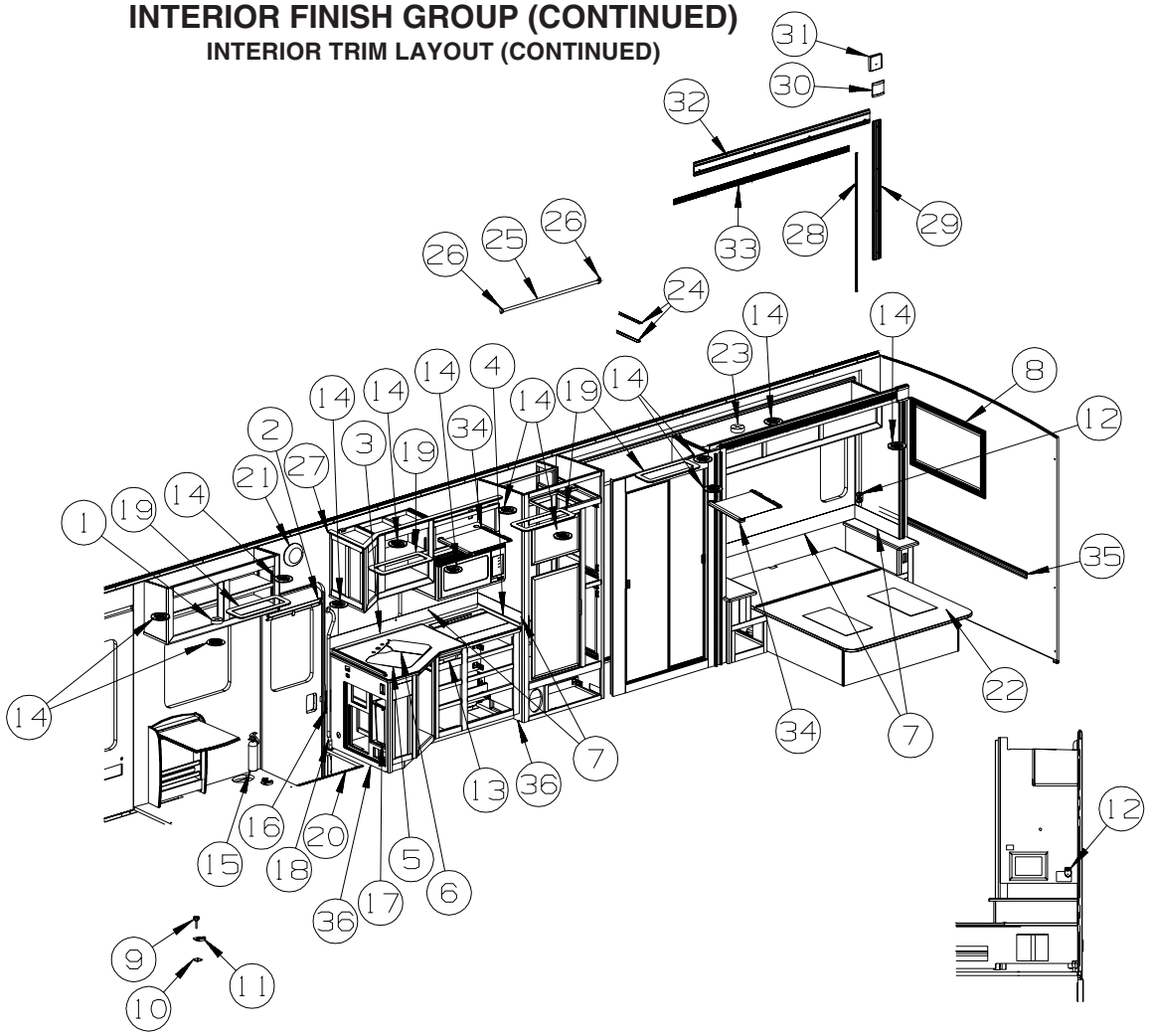

KEY	PART NUMBER	U/M	DESCRIPTION
30	153044-04-TE6	EA	MOLDING/TRIM - SLIDEOUT - 5.1" X 4.7" - WASHED MAPLE FROM: 08-08-05 THRU: 99-99-99
30	153044-02-T92	EA	MOLDING/TRIM - SLIDEOUT - 3.7" X 4.2" - SIERRA MAPLE FROM: 00-00-00 THRU: 08-07-05
30	153044-04-TE7	EA	MOLDING/TRIM - SLIDEOUT - 5.1" X 4.7" - SIERRA MAPLE FROM: 08-08-05 THRU: 99-99-99
31	153434-02-T89	EA	MOLDING - TRIM - SLIDEOUT/CORNER - PORTSMOUTH OAK - NOT ILLUSTRATED FROM: 00-00-00 THRU: 08-07-05
31	153421-02-TD0	EA	MOLDING/BLOCK - 5.1" X 5.1" - W/O INSERT - PORTSMOUTH OAK FROM: 08-08-05 THRU: 99-99-99
31	153434-02-T90	EA	MOLDING - TRIM - SLIDEOUT/CORNER - CONCERT CHERRY - NOT ILLUSTRATED FROM: 00-00-00 THRU: 08-07-05
31	153421-02-TD1	EA	MOLDING/BLOCK - 5.1" X 5.1" - W/O INSERT - CONCERT CHERRY FROM: 08-08-05 THRU: 99-99-99
31	153434-02-T91	EA	MOLDING - TRIM - SLIDEOUT/CORNER - WASHED MAPLE - NOT ILLUSTRATED FROM: 00-00-00 THRU: 08-07-05
31	153421-02-TD2	EA	MOLDING/BLOCK - 5.1" X 5.1" - W/O INSERT - WASHED MAPLE FROM: 08-08-05 THRU: 99-99-99
31	153434-02-T92	EA	MOLDING - TRIM - SLIDEOUT/CORNER - SIERRA MAPLE - NOT ILLUSTRATED FROM: 00-00-00 THRU: 08-07-05
31	153421-02-TD3	EA	MOLDING/BLOCK - 5.1" X 5.1" - W/O INSERT - SIERRA MAPLE FROM: 08-08-05 THRU: 99-99-99
32	Y00291-72-438	EA	MOLDING - VINYL WRAP - 4" X 96" - PORTSMOUTH OAK - NOT ILLUSTRATED FROM: 00-00-00 THRU: 08-07-05
32	Y00327-72-438	EA	MOLDING - VINYL/CURVED - 5.1" X 96" - PORTSMOUTH OAK FROM: 08-08-05 THRU: 99-99-99
32	Y00291-62-438	EA	MOLDING - VINYL WRAP - 4" X 96" - CONCERT CHERRY - NOT ILLUSTRATED FROM: 00-00-00 THRU: 08-07-05
32	Y00327-62-438	EA	MOLDING - VINYL/CURVED - 5.1" X 96" - CONCERT CHERRY FROM: 08-08-05 THRU: 99-99-99

COPYRIGHT © 2006 WINNEBAGO INDUSTRIES INC.

INTERIOR FINISH GROUP (CONTINUED)

INTERIOR TRIM LAYOUT (CONTINUED)

KEY	PART NUMBER	U/M	DESCRIPTION
32	Y00291-A2-438	EA	MOLDING - VINYL WRAP - 4" X 96" - WASHED MAPLE - NOT ILLUSTRATED FROM: 00-00-00 THRU: 08-07-05
32	Y00327-A2-438	EA	MOLDING - VINYL/CURVED - 5.1" X 96" - WASHED MAPLE FROM: 08-08-05 THRU: 99-99-99
32	Y00291-92-438	EA	MOLDING - VINYL WRAP - 4" X 96" - SIERRA MAPLE - NOT ILLUSTRATED FROM: 00-00-00 THRU: 08-07-05
32	Y00327-92-438	EA	MOLDING - VINYL/CURVED - 5.1" X 96" - SIERRA MAPLE FROM: 08-08-05 THRU: 99-99-99
33	M09515-87-T89	EA	MOLDING/TRIM - FLUTED - 3" X 80.5" - PORTSMOUTH OAK - NOT ILLUSTRATED FROM: 00-00-00 THRU: 08-07-05
33	M09511-71-TD0	EA	MOLDING/TRIM - FLUTED - 2" X 92.5" - PORTSMOUTH OAK FROM: 08-08-05 THRU: 99-99-99
33	M09515-87-T90	EA	MOLDING/TRIM - FLUTED - 3" X 80.5" - CONCERT CHERRY - NOT ILLUSTRATED FROM: 00-00-00 THRU: 08-07-05
33	M09511-71-TD1	EA	MOLDING/TRIM - FLUTED - 2" X 92.5" - CONCERT CHERRY FROM: 08-08-05 THRU: 99-99-99
33	M09515-87-T91	EA	MOLDING/TRIM - FLUTED - 3" X 80.5" - WASHED MAPLE - NOT ILLUSTRATED FROM: 00-00-00 THRU: 08-07-05
33	M09511-71-TD2	EA	MOLDING/TRIM - FLUTED - 2" X 92.5" - WASHED MAPLE FROM: 08-08-05 THRU: 99-99-99
33	M09515-87-T92	EA	MOLDING/TRIM - FLUTED - 3" X 80.5" - SIERRA MAPLE - NOT ILLUSTRATED FROM: 00-00-00 THRU: 08-07-05
33	M09511-71-TD3	EA	MOLDING/TRIM - FLUTED - 2" X 92.5" - SIERRA MAPLE FROM: 08-08-05 THRU: 99-99-99

COPYRIGHT © 2006 WINNEBAGO INDUSTRIES INC.

INTERIOR FINISH GROUP (CONTINUED)

INTERIOR TRIM LAYOUT (CONTINUED)

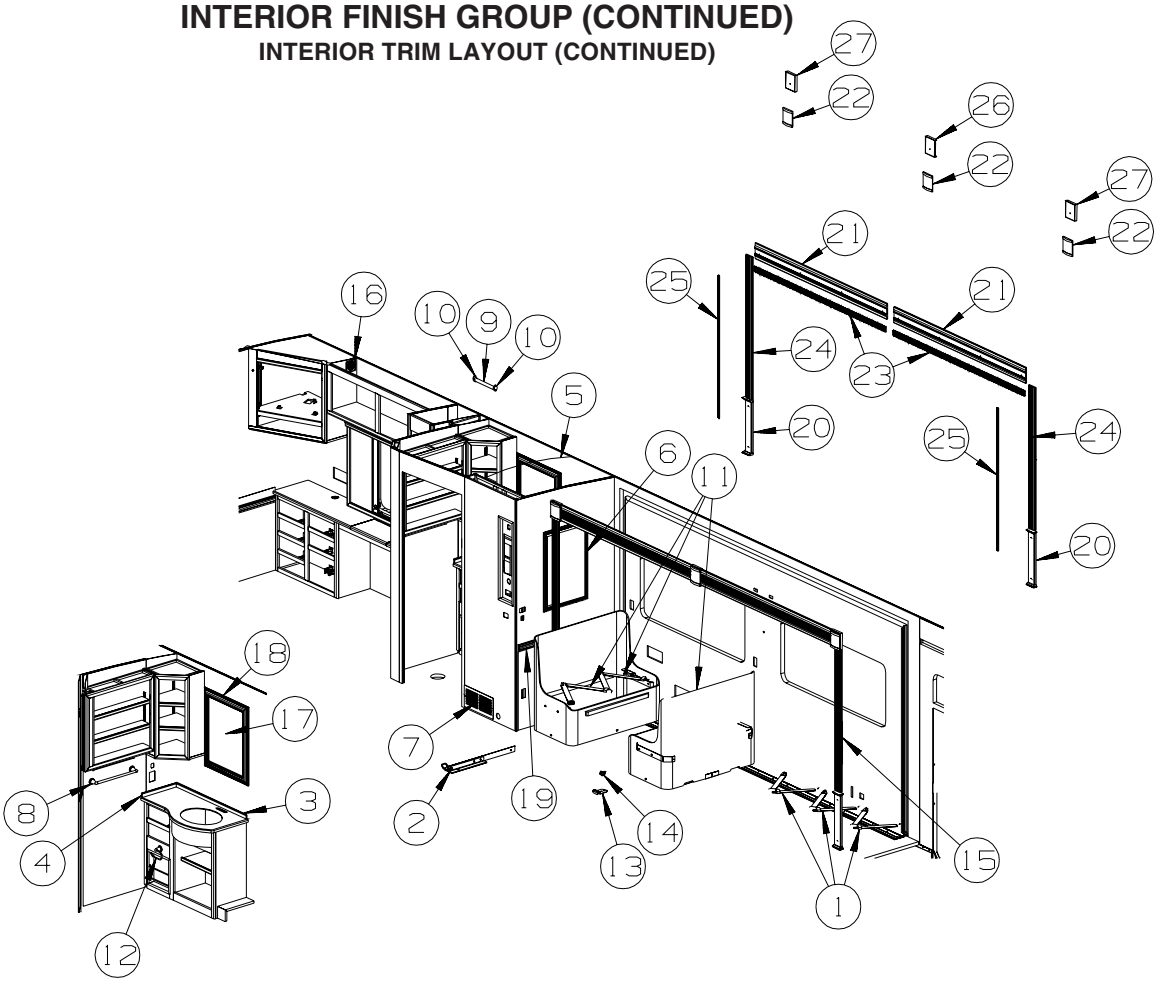

KEY	PART NUMBER	U/M	DESCRIPTION
1	056271-01-000	EA	SEAT BELT - 2" X 102" - BLACK
2	151078-01-02B	EA	BRACKET - MOUNTING - SEAT BELT - E-COATED
3	130813-57-06A	EA	BACKSPLASH/COUNTERTOP - 1/2" VENDURA - OATMEAL
4	130813-58-06A	EA	BACKSPLASH/COUNTERTOP - 1/2" VENDURA - OATMEAL
5*	115011-03-02A	EA	DOOR SHOWER - SLIDING/BYPASS W/40" LOWER TRACK-CHROME/AQUA
6	149147-03-06A	EA	MIRROR - FRAMED - BEVELED - 20" X 30"
7	093614-01-02A	EA	GRILLE - AIR RETURN - 15.9" X 7.9" - BEIGE
8	152959-01-01A	EA	TOWEL BAR - 18" - NICKEL
9	Y00136-21-218	EA	DOWEL - WOOD - CLOTHES ROD - 1"DIAMETER X 4'
10	152301-01-01A	EA	FLANGE - PLASTIC - 1" CLOTHES ROD HOLDER - WHITE
11	007021-01-000	EA	SEAT BELT - 2" X 90" - BLACK
12	152958-01-01A	EA	HOLDER - PAPER - W/LID - NICKEL
13	134057-04-11B	EA	BRACKET - RECLINER - FLAT BLACK - DINING TABLE/CHAIRS
14	140334-01-01A	EA	KNOB - HOLD DOWN - RECLINER - DINING TABLE/CHAIRS
15	130262-04-000	EA	PROTECTOR - CORNER SAVER - .4" X .7" X 48"
16	093214-01-03A	EA	GRILLE - SPEAKER - 4" - GLACIER FROM: 00-00-00 THRU: 11-06-05
16	093214-01-05A	EA	GRILLE - SPEAKER - 4" - CASHMERE FROM: 11-07-05 THRU: 99-99-99
17	140374-66-000	EA	MIRROR - SAFETY GLASS - 20.1" X 25.2"
18	142631-03-03A	EA	FRAME - MIRROR - 29.5"H X 24.4"W - PORTSMOUTH OAK
18	142631-03-01A	EA	FRAME - MIRROR - 29.5"H X 24.4"W - CONCERT CHERRY
18	142631-03-02A	EA	FRAME - MIRROR - 29.5"H X 24.4"W - WASHED MAPLE
18	142631-03-04A	EA	FRAME - MIRROR - 29.5"H X 24.4"W - SIERRA MAPLE
19	M09462-66-R74	EA	MOLDING - TRIM/RAIL - .6" X 2.4" X 96" - PORTSMOUTH OAK
19	M09462-66-R75	EA	MOLDING - TRIM/RAIL - .6" X 2.4" X 96" - CONCERT CHERRY
19	M09462-66-R76	EA	MOLDING - TRIM/RAIL - .6" X 2.4" X 96" - WASHED MAPLE
19	M09462-66-SA3	EA	MOLDING - TRIM/RAIL - .6" X 2.4" X 96" - SIERRA MAPLE
20	153973-01-TD0	EA	MOLDING - CROWN/BLOCK - 4.2" X 20.6" - PORTSMOUTH OAK
20	153973-01-TD1	EA	MOLDING - CROWN/BLOCK - 4.2" X 20.6" - CONCERT CHERRY
20	153973-01-TD2	EA	MOLDING - CROWN/BLOCK - 4.2" X 20.6" - WASHED MAPLE
20	153973-01-TD3	EA	MOLDING - CROWN/BLOCK - 4.2" X 20.6" - SIERRA MAPLE

COPYRIGHT © 2006 WINNEBAGO INDUSTRIES INC.

INTERIOR FINISH GROUP (CONTINUED)

INTERIOR TRIM LAYOUT (CONTINUED)

KEY	PART NUMBER	U/M	DESCRIPTION
21	Y00280-72-438	EA	MOLDING/TRIM - VINYL - F/SLIDEOUT - 96" - PORTSMOUTH OAK - NOT ILLUSTRATED FROM: 00-00-00 THRU: 08-07-05
21	Y00337-72-438	EA	MOLDING/TRIM - VINYL/CURVED - 5.9" X 96" - PORTSMOUTH OAK FROM: 08-08-05 THRU: 99-99-99
21	Y00280-62-438	EA	MOLDING/TRIM - VINYL - F/SLIDEOUT - 96" - CONCERT CHERRY - NOT ILLUSTRATED FROM: 00-00-00 THRU: 08-07-05
21	Y00337-62-438	EA	MOLDING/TRIM - VINYL/CURVED - 5.9" X 96" - CONCERT CHERRY FROM: 08-08-05 THRU: 99-99-99
21	Y00280-A2-438	EA	MOLDING/TRIM - VINYL - F/SLIDEOUT - 96" - WASHED MAPLE - NOT ILLUSTRATED FROM: 00-00-00 THRU: 08-07-05
21	Y00337-A2-438	EA	MOLDING/TRIM - VINYL/CURVED - 5.9" X 96" - WASHED MAPLE FROM: 08-08-05 THRU: 99-99-99
21	Y00280-92-438	EA	MOLDING/TRIM - VINYL - F/SLIDEOUT - 96" - SIERRA MAPLE - NOT ILLUSTRATED FROM: 00-00-00 THRU: 08-07-05
21	Y00337-92-438	EA	MOLDING/TRIM - VINYL/CURVED - 5.9" X 96" - SIERRA MAPLE FROM: 08-08-05 THRU: 99-99-99
22	153044-01-T89	EA	MOLDING/TRIM - SLIDEOUT - 3.7" X 6.1" - PORTSMOUTH OAK FROM: 00-00-00 THRU: 08-07-05
22	153044-05-TE4	EA	MOLDING/TRIM - SLIDEOUT - 5.1" X 5.9" - PORTSMOUTH OAK FROM: 08-08-05 THRU: 99-99-99
22	153044-01-T90	EA	MOLDING/TRIM - SLIDEOUT - 3.7" X 6.1" - CONCERT CHERRY FROM: 00-00-00 THRU: 08-07-05
22	153044-05-TE5	EA	MOLDING/TRIM - SLIDEOUT - 5.1" X 5.9" - CONCERT CHERRY FROM: 08-08-05 THRU: 99-99-99
22	153044-01-T91	EA	MOLDING/TRIM - SLIDEOUT - 3.7" X 6.1" - WASHED MAPLE FROM: 00-00-00 THRU: 08-07-05
22	153044-05-TE6	EA	MOLDING/TRIM - SLIDEOUT - 5.1" X 5.9" - WASHED MAPLE FROM: 08-08-05 THRU: 99-99-99
22	153044-01-T92	EA	MOLDING/TRIM - SLIDEOUT - 3.7" X 6.1" - SIERRA MAPLE FROM: 00-00-00 THRU: 08-07-05
22	153044-05-TE7	EA	MOLDING/TRIM - SLIDEOUT - 5.1" X 5.9" - SIERRA MAPLE FROM: 08-08-05 THRU: 99-99-99
23	M09511-38-T89	EA	MOLDING - TRIM/FLUTED - 5" X 91.8" - PORTSMOUTH OAK - NOT ILLUSTRATED FROM: 00-00-00 THRU: 08-07-05
23	M09511-71-TD0	EA	MOLDING/TRIM - FLUTED - 2" X 92.5" - PORTSMOUTH OAK FROM: 08-08-05 THRU: 99-99-99
23	M09511-38-T90	EA	MOLDING - TRIM/VEE - .2" X 1" X 96" - CONCERT CHERRY - NOT ILLUSTRATED FROM: 00-00-00 THRU: 08-07-05
23	M09511-71-TD1	EA	MOLDING/TRIM - FLUTED - 2" X 92.5" - CONCERT CHERRY FROM: 08-08-05 THRU: 99-99-99
23	M09511-38-T91	EA	MOLDING - TRIM/VEE - .2" X 1" X 96" - WASHED MAPLE - NOT ILLUSTRATED FROM: 00-00-00 THRU: 08-07-05
23	M09511-71-TD2	EA	MOLDING/TRIM - FLUTED - 2" X 92.5" - WASHED MAPLE FROM: 08-08-05 THRU: 99-99-99
23	M09511-38-T92	EA	MOLDING - TRIM/VEE - .2" X 1" X 96" - SIERRA MAPLE - NOT ILLUSTRATED FROM: 00-00-00 THRU: 08-07-05
23	M09511-71-TD3	EA	MOLDING/TRIM - FLUTED - 2" X 92.5" - SIERRA MAPLE FROM: 08-08-05 THRU: 99-99-99
24	Y00281-72-438	EA	MOLDING - SLIDEOUT/VINYL WRAP - 3.5"X 96" - PORTSMOUTH OAK - NOT ILLUSTRATED FROM: 00-00-00 THRU: 08-07-05
24	Y00328-72-438	EA	MOLDING - VINYL/CURVED - 3.5" X 96" - PORTSMOUTH OAK FROM: 08-08-05 THRU: 99-99-99
24	Y00281-62-438	EA	MOLDING - SLIDEOUT/VINYL WRAP - 3.5"X 96" - CONCERT CHERRY - NOT ILLUSTRATED FROM: 00-00-00 THRU: 08-07-05
24	Y00328-62-438	EA	MOLDING - VINYL/CURVED - 3.5" X 96" - CONCERT CHERRY FROM: 08-08-05 THRU: 99-99-99
24	Y00281-A2-438	EA	MOLDING - SLIDEOUT/VINYL WRAP - 3.5"X 96" - WASHED MAPLE - NOT ILLUSTRATED FROM: 00-00-00 THRU: 08-07-05
24	Y00328-A2-438	EA	MOLDING - VINYL/CURVED - 3.5" X 96" - WASHED MAPLE FROM: 08-08-05 THRU: 99-99-99
24	Y00281-92-438	EA	MOLDING - SLIDEOUT/VINYL WRAP - 3.5"X 96" - SIERRA MAPLE - NOT ILLUSTRATED FROM: 00-00-00 THRU: 08-07-05
24	Y00328-92-438	EA	MOLDING - VINYL/CURVED - 3.5" X 96" - SIERRA MAPLE FROM: 08-08-05 THRU: 99-99-99

COPYRIGHT © 2006 WINNEBAGO INDUSTRIES INC.

INTERIOR FINISH GROUP (CONTINUED)

INTERIOR TRIM LAYOUT (CONTINUED)

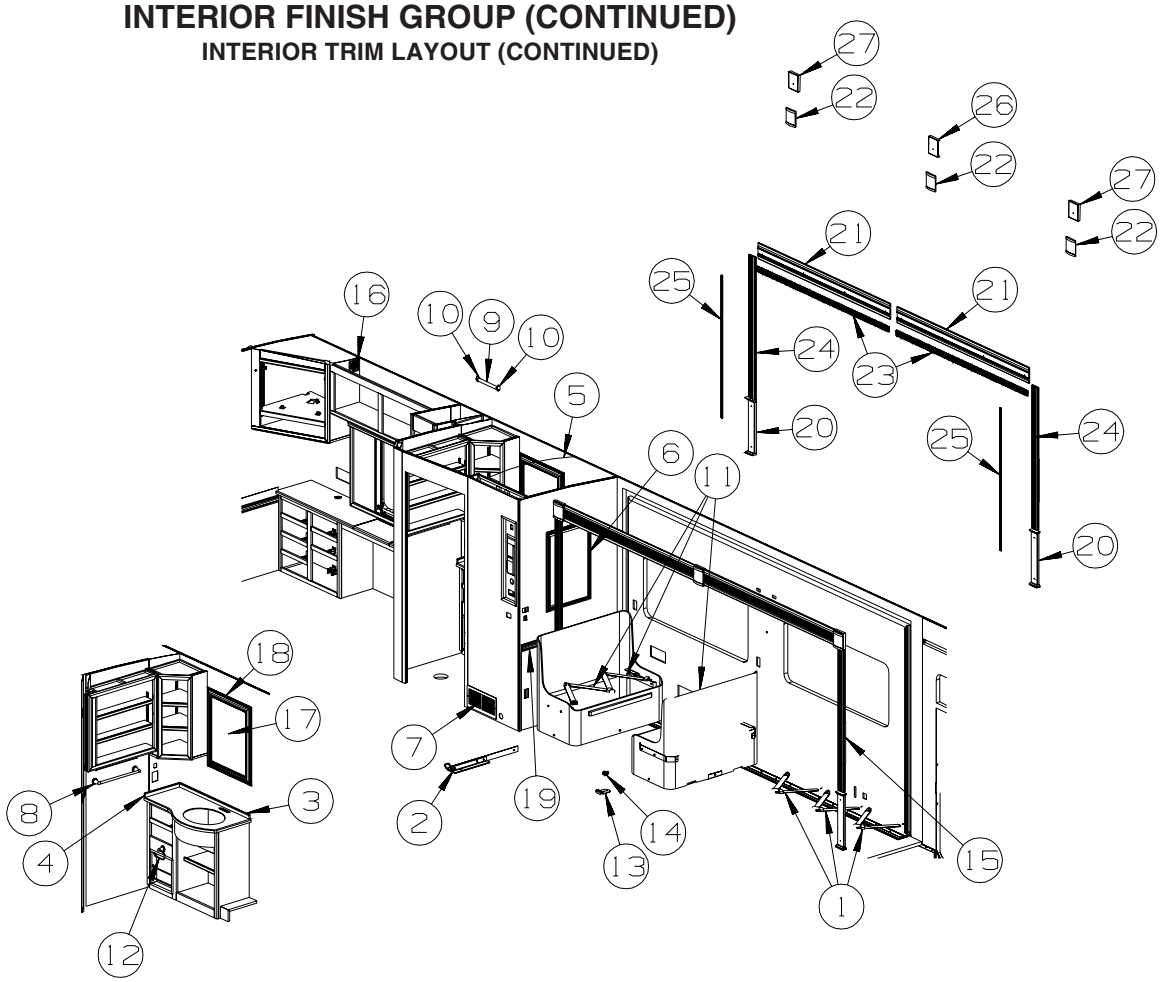

KEY	PART NUMBER	U/M	DESCRIPTION
25	M09515-79-T89	EA	MOLDING/TRIM - FLUTED - 2.6" X 75.4" - PORTSMOUTH OAK - NOT ILLUSTRATED FROM: 00-00-00 THRU: 08-07-05
25	Y00326-72-438	EA	MOLDING - VINYL/CONCAVED - .7" X 96" - PORTSMOUTH OAK FROM: 08-08-05 THRU: 99-99-99
25	M09515-79-T90	EA	MOLDING/TRIM - FLUTED - 2.6" X 75.4" - CONCERT CHERRY - NOT ILLUSTRATED FROM: 00-00-00 THRU: 08-07-05
25	Y00326-62-438	EA	MOLDING - VINYL/CONCAVED - .7" X 96" - CONCERT CHERRY FROM: 08-08-05 THRU: 99-99-99
25	M09515-79-T91	EA	MOLDING/TRIM - FLUTED - 2.6" X 75.4" - WASHED MAPLE - NOT ILLUSTRATED FROM: 00-00-00 THRU: 08-07-05
25	Y00326-A2-438	EA	MOLDING - VINYL/CONCAVED - .7" X 96" - WASHED MAPLE FROM: 08-08-05 THRU: 99-99-99
25	M09515-79-T92	EA	MOLDING/TRIM - FLUTED - 2.6" X 75.4" - SIERRA MAPLE - NOT ILLUSTRATED FROM: 00-00-00 THRU: 08-07-05
25	Y00326-92-438	EA	MOLDING - VINYL/CONCAVED - .7" X 96" - SIERRA MAPLE FROM: 08-08-05 THRU: 99-99-99
26	153434-01-T89	EA	MOLDING - TRIM - SLIDEOUT/CORNER - PORTSMOUTH OAK - NOT ILLUSTRATED FROM: 00-00-00 THRU: 08-07-05
26	P53421-06-TE4	EA	MOLDING/BLOCK - 5.1" X 6.4" - W/O INSERT - PORTSMOUTH OAK FROM: 08-08-05 THRU: 99-99-99
26	153434-01-T90	EA	MOLDING - TRIM - SLIDEOUT/CORNER - CONCERT CHERRY - NOT ILLUSTRATED FROM: 00-00-00 THRU: 08-07-05
26	P53421-06-TE5	EA	MOLDING/BLOCK - 5.1" X 6.4" - W/O INSERT - CONCERT CHERRY FROM: 08-08-05 THRU: 99-99-99
26	153434-01-T91	EA	MOLDING - TRIM - SLIDEOUT/CORNER - WASHED MAPLE - NOT ILLUSTRATED FROM: 00-00-00 THRU: 08-07-05
26	P53421-06-TE6	EA	MOLDING/BLOCK - 5.1" X 6.4" - W/O INSERT - WASHED MAPLE FROM: 08-08-05 THRU: 99-99-99
26	153434-01-T92	EA	MOLDING - TRIM - SLIDEOUT/CORNER - SIERRA MAPLE - NOT ILLUSTRATED FROM: 00-00-00 THRU: 08-07-05
26	P53421-06-TE7	EA	MOLDING/BLOCK - 5.1" X 6.4" - W/O INSERT - SIERRA MAPLE FROM: 08-08-05 THRU: 99-99-99

COPYRIGHT © 2006 WINNEBAGO INDUSTRIES INC.

INTERIOR FINISH GROUP (CONTINUED)

INTERIOR TRIM LAYOUT (CONTINUED)

KEY	PART NUMBER	U/M	DESCRIPTION
27	153434-01-T89	EA	MOLDING - TRIM - SLIDEOUT/CORNER - PORTSMOUTH OAK - NOT ILLUSTRATED
			FROM: 00-00-00 THRU: 08-07-05
27	153421-05-TD0	EA	MOLDING/BLOCK - 5.1" X 5.9" - W/O INSERT - PORTSMOUTH OAK
			FROM: 08-08-05 THRU: 99-99-99
27	153434-01-T90	EA	MOLDING - TRIM - SLIDEOUT/CORNER - CONCERT CHERRY - NOT ILLUSTRATED
			FROM: 00-00-00 THRU: 08-07-05
27	153421-05-TD1	EA	MOLDING/BLOCK - 5.1" X 5.9" - W/O INSERT - CONCERT CHERRY
			FROM: 08-08-05 THRU: 99-99-99
27	153434-01-T91	EA	MOLDING - TRIM - SLIDEOUT/CORNER - WASHED MAPLE - NOT ILLUSTRATED
			FROM: 00-00-00 THRU: 08-07-05
27	153421-05-TD2	EA	MOLDING/BLOCK - 5.1" X 5.9" - W/O INSERT - WASHED MAPLE
			FROM: 08-08-05 THRU: 99-99-99
27	153434-01-T92	EA	MOLDING - TRIM - SLIDEOUT/CORNER - SIERRA MAPLE - NOT ILLUSTRATED
			FROM: 00-00-00 THRU: 08-07-05
27	153421-05-TD3	EA	MOLDING/BLOCK - 5.1" X 5.9" - W/O INSERT - SIERRA MAPLE
			FROM: 08-08-05 THRU: 99-99-99

***COMPONENT PARTS LISTED LATER IN THIS GROUP**

COMPONENT PARTSFOR INTERIOR TRIM LAYOUT

094499-02-000

KEY	PART NUMBER	U/M	DESCRIPTION	VENDOR NO
	094499-01-700	EA	BRACKET MTG. W/PLAS. STRAP	294039

COPYRIGHT © 2006 WINNEBAGO INDUSTRIES INC.

INTERIOR FINISH GROUP (CONTINUED)

COMPONENT PARTSFOR INTERIOR TRIM LAYOUT (CONTINUED)

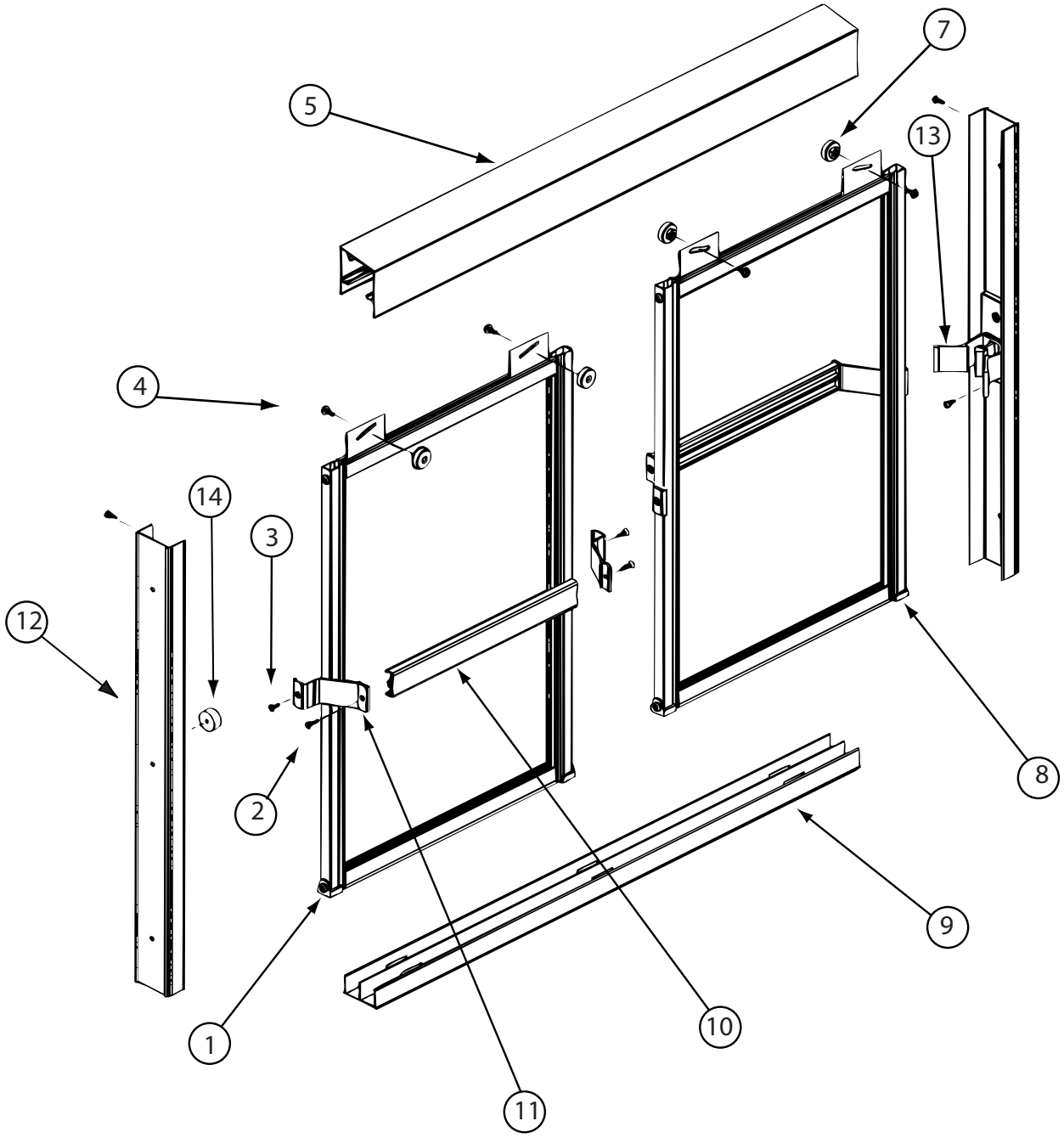

115011-03-02A

KEY	PART NUMBER	U/M	DESCRIPTION	VENDOR NO.
1	115011-03-708	EA	GUIDE/NYLON -F/DOOR BOTTOM	CP1105
2	115011-03-700	EA	SCREW F/TOWEL BAR/HEADER	612F-B
3	115011-03-703	EA	SCREW F/TOWEL BAR BRKTS	638F-B CHROME
4	115011-01-705	EA	SCREW-ROLLER, (HEX HEAD)	832HEX
5	115011-03-709	EA	HEADER - CHROME	45B
7	115011-01-704	EA	ROLLERS	PN193
8	115011-01-706	FT	GLAZING VINYL-BLACK	C154B
9	115011-03-704	EA	TRACK/BOTTOM - 50" CHROME	90B
10	115011-03-701	EA	TOWEL BAR - SILVER	136B - 17"
11	115011-03-702	EA	BRACKET-TOWEL BAR - SILVER	135B
12	115011-03-706	EA	JAMB - WALL SHOWER DOOR	126B
13	115011-03-707	EA	TRAVEL LATCH - BLACK	9733B
	115011-01-714	EA	BUMPER - RATTLE/SHOWER DOOR	5168S
	115011-01-715	EA	PAD - FOAM	116R
			CONTACT WINNEBAGO PART SALES FOR UNLISTED COMPONENT(S)	

COPYRIGHT © 2006 WINNEBAGO INDUSTRIES INC.

INTERIOR FINISH GROUP (CONTINUED)

FLOOR COVERINGS

KEY	PART NUMBER	U/M	DESCRIPTION
	075233-01-000	SY	PAD - CARPET - 3/8" X 6' ROLL
	089275-02-000	FT	STRIP - 3/4" X 84" BLACK POLYETHYLENE
	093486-01-000	SY	CARPET - COMPARTMENT - 72" WIDE - DARK GRAY
	131711-01-10A	EA	TILE/FLOOR - VINYL - 12" X 12" - CLAY BEIGE (T89, T90, T91, T92, T97, T98, T99, T00) FROM: 00-00-00 THRU: 07-10-05
	131711-01-11A	EA	TILE/FLOOR - VINYL - 12" X 12" - STONEY TAUPE (T89, T90, T91, T92, T97, T98, T99, T00) FROM: 07-11-05 THRU: 99-99-99
	131711-01-11A	EA	TILE/FLOOR - VINYL - 12" X 12" - STONEY TAUPE (T93, T94, T95, T96)
	152251-05-02A	SY	CARPET - 4 SQUARE YARD INCREMENTS - BURLWOOD (T89, T90, T91, T92)
	152251-02-01A	SY	CARPET - 4 SQUARE YARD INCREMENTS - CORK (T93, T94, T95, T96)
	152251-02-02A	SY	CARPET - 4 SQUARE YARD INCREMENTS - DESERT ROCK (T97, T98, T99, T00)

COPYRIGHT © 2006 WINNEBAGO INDUSTRIES INC.

INTERIOR FINISH GROUP (CONTINUED)

HARDWARE

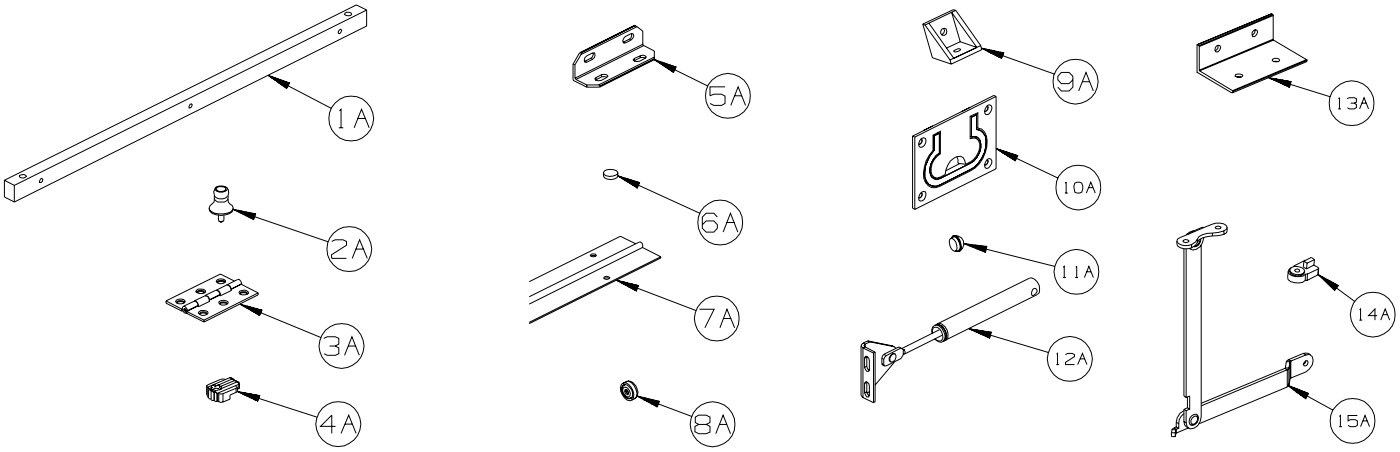

KEY	PART NUMBER	U/M	DESCRIPTION
1A	P34509-01-N01	EA	RAIL END - RH/LH - TOWEL RACK - PORTSMOUTH
1A	P34509-01-P14	EA	RAIL END - RH/LH - TOWEL RACK - CONCERT CHERRY
1A	P34509-01-J70	EA	RAIL END - RH/LH - TOWEL RACK - WASHED MAPLE
1A	P34509-01-RE0	EA	RAIL END - RH/LH - TOWEL RACK - HONEY CHERRY
1A	P34509-01-SA3	EA	RAIL END - RH/LH - TOWEL RACK - SIERRA MAPLE
2A	009013-01-000	EA	CATCH - BULLDOG - MALE/FEMALE
3A	009059-01-000	EA	HINGE - DOOR - 2" X 1.4" - BRASS
3A	009059-02-000	EA	HINGE - DOOR - 2" X 2.7" - BRASS
3A	009059-03-000	EA	HINGE - BRASS - 1.75"
3A	009059-04-000	EA	HINGE - 2” - ZINC
4A	009089-01-000	EA	CLIP - MIRROR
5A	016604-01-000	EA	BRACE - ANGLE - 2 1/2" - UNPAINTED METAL
5A	016604-05-000	EA	BRACE - ANGLE - 2 1/2" - OFF WHITE METAL
5A	016604-10-000	EA	BRACE - SEAT ANGLE - 2.5" - BLACK
6A	023320-01-000	EA	PAD - FELT 3/8" DIAMETER
7A	041389-19-000	EA	HINGE - PIANO - 1 1/2" X 71.9" - UNPAINTED
7A	041389-25-000	EA	HINGE - PIANO - 1 1/2" X 55" - UNPAINTED
7A	041389-32-000	EA	HINGE - PIANO - 68" - OFF WHITE
8A	057671-01-000	EA	COVER - SCREW - #8 - OFF WHITE
8A	057671-15-000	EA	COVER - SCREW - #8 - BRIGHT WHITE
8A	057671-16-000	EA	COVER - SCREW - #8 - SOFT WHITE
8A	057671-18-000	EA	COVER - SCREW - #8 - OFF WHITE
9A	065740-01-000	EA	BRACE - CABINET/CORNER - PLASTIC
10A	072871-01-000	EA	PULL - FLUSH - CHROME
11A	074045-13-000	EA	PLUG - OAK - 3/8" DOWEL-1/2" HEAD - PORTSMOUTH OAK
11A	074045-08-000	EA	PLUG - OAK - 3/8" DOWEL-1/2" HEAD - CONCERT CHERRY
11A	074045-12-000	EA	PLUG - OAK - 3/8" DOWEL-1/2" HEAD - WASHED MAPLE
11A	074045-14-000	EA	PLUG - OAK - 3/8" DOWEL-1/2" HEAD - HONEY CHERRY
11A	074045-15-000	EA	PLUG - OAK - 3/8" DOWEL-1/2" HEAD - SIERRA MAPLE
12A	074493-02-000	EA	SUPPORT - PISTON SPRING - CABINET DOOR - 26 LBS
12A	074493-03-000	EA	SUPPORT - PISTON SPRING - CABINET DOOR - 12 LBS
12A	074493-04-000	EA	SUPPORT - PISTON SPRING - CABINET DOOR - 32LBS
13A	083125-07-000	EA	BRACE - ANGLE/COUCH - 2.5" - OFF WHITE
13A	156732-01-02A	EA	BRACE - ANGLE/COUCH - 2.5" - OFF WHITE
14A	083204-03-000	EA	BUTTON - RETAINING MIRROR 5/16" TIP
15A	084412-01-000	EA	SUPPORT/HINGE KIT (LEFT & RIGHT HINGES)

COPYRIGHT © 2006 WINNEBAGO INDUSTRIES INC.

INTERIOR FINISH GROUP (CONTINUED)

HARDWARE (CONTINUED)

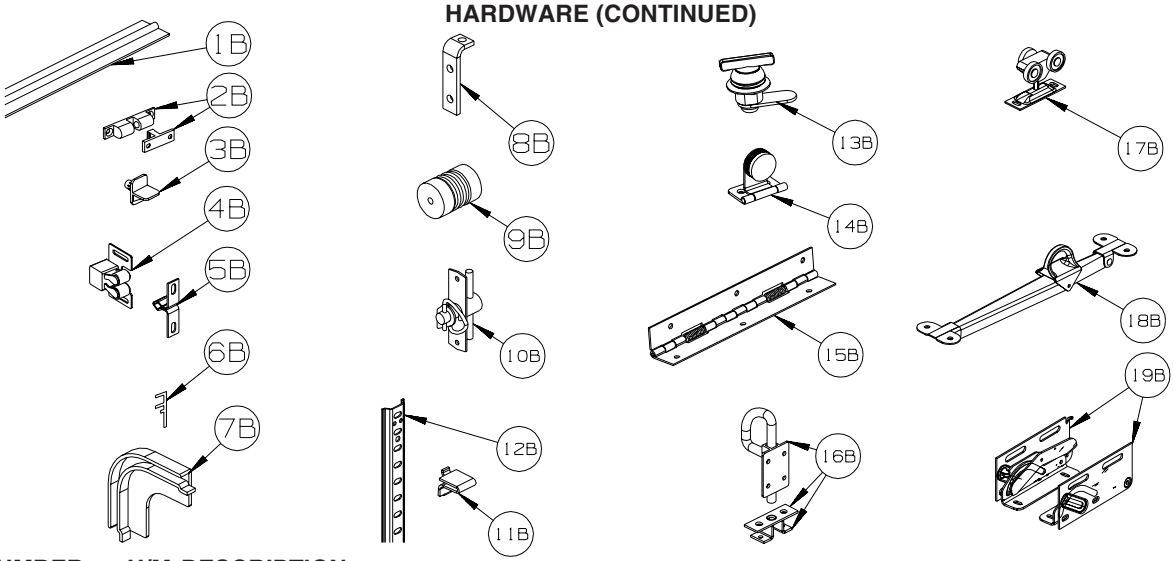

KEY	PART NUMBER	U/M	DESCRIPTION
1B	084413-01-000	EA	HINGE - 1" X 72" - ALUMINUM - W/HOLES
1B	134099-01-02A	EA	HINGE - PIANO - WRAP AROUND - 15.7" - NICKEL PLATED
2B	084451-01-000	EA	CATCH & LATCH - 1.7" - BRASS
3B	092907-01-000	EA	SUPPORT - SHELF - PIN - 1/4" - CLEAR PLASTIC
4B	093586-03-000	EA	CATCH - SPRING ROLLER - .377"
4B	093586-06-000	EA	CATCH - SPRING ROLLER - .236"
5B	093586-04-000	EA	STRIKE - SPRING STEEL - 1.14"
5B	093586-05-000	EA	STRIKE - SPRING STEEL - .943"
6B	093622-01-000	EA	TRACK - DOOR - TAMBOUR - PLASTIC - 8' LENGTHS
7B	093623-01-000	EA	CORNER - TRACK - TAMBOUR DOOR
8B	096826-01-01A	EA	BRACE-CABINET E-COATED
9B	097872-04-000	EA	DOWEL - WOOD - 1" DIAMETER X 1.38" LONG - UNFINISHED
10B	098196-01-000	EA	LATCH - 1/4 TURN - T-BAR
11B	098979-01-000	EA	CLIP - ADJUSTABLE SHELF
12B	098980-01-000	EA	PILASTER - ADJUSTABLE SHELF - 18"
12B	098980-02-000	EA	PILASTER - ADJUSTABLE SHELF - 12"
12B	098980-03-000	EA	PILASTER - ADJUSTABLE SHELF - 9"
12B	098980-04-000	EA	PILASTER - ADJUSTABLE SHELF - 48"
12B	098980-05-000	EA	PILASTER - ADJUSTABLE SHELF - 15"
12B	098980-06-000	EA	PILASTER - ADJUSTABLE SHELF - 24"
13B	100710-01-02A	EA	LOCK - GLASS DOOR/TWIST TYPE - NICKEL
14B	100711-01-02A	EA	HINGE - GLASS DOOR - NICKEL
15B	102920-01-01A	EA	HINGE - SPRING LOADED - BRASS
15B	102920-01-02A	EA	HINGE - SPRING LOADED - NICKEL
15B	129753-01-01A	EA	HINGE - SPRING LOADED - 19" X 19" - BLACK
16B	103256-01-000	EA	LATCH COMPLETE (SLIDE)
17B	103874-01-000	EA	HANGER - SLIDING DOOR
18B	104181-01-01A	EA	SUPPORT - LEAF 5.3" EXTENDS TO 7.5" - SAFETY RING - METAL
19B	108126-01-000	EA	TRAY HINGE SET (QTY. 2 PER SET)

COPYRIGHT © 2006 WINNEBAGO INDUSTRIES INC.

INTERIOR FINISH GROUP (CONTINUED)

HARDWARE (CONTINUED)

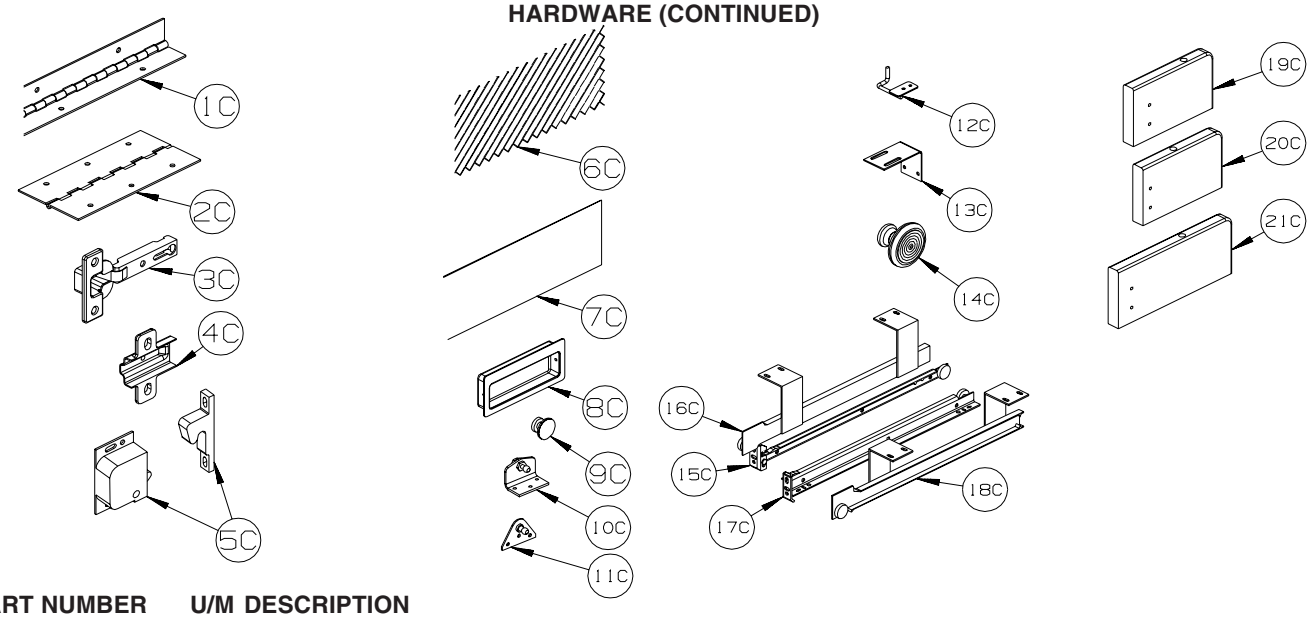

KEY	PART NUMBER	U/M	DESCRIPTION
1C	110496-01-01A	EA	HINGE - BRASS - 2” X 32”
1C	110496-01-02A	EA	HINGE - NICKEL - 2” X 32”
1C	110496-05-02A	EA	HINGE - NICKEL - 2" X 11.5"
2C	114278-02-000	EA	HINGE - CONTINUOUS - 3" WIDE
3C	114443-02-01A	EA	HINGE - CABINET DOOR - W/O CLIP - SILVER
4C	114443-03-01A	EA	CLIP - HINGE/CABINET DOOR - SILVER
5C	117095-01-01A	EA	LATCH - DOOR - GRABBER W/KEEPER - PLASTIC - BLK-5 LB PULL
5C	117095-02-01A	EA	LATCH - DOOR - GRABBER W/KEEPER - PLASTIC - BLK-10 LB PULL
5C	117095-03-01A	EA	LATCH - DOOR - GRABBER W/KEEPER - PLASTIC - BLK-15 LB PULL
6C	118200-01-01A	SF	MESH - PLASTIC 1/2" - 48" X LENGTH = SF - BLACK
7C	122717-06-01A	FT	PAD - NON-SKID - PSA - 5"W
8C	124311-01-01A	EA	HANDLE - RECESSED - BRASS
9C	125221-01-01A	EA	PULL - MIRROR - W/ROUND HANDLE
10C	126263-06-02B	EA	BRACKET - GAS SPRING W/INSIDE BALL STUD - E-COATED
	057460-02-000	EA	BALL STUD - F/GAS SPRING .39” - 5/16” -18
11C	126263-05-02B	EA	BRACKET - GAS SPRING W/BALL STUD - E-COATED
	057460-02-000	EA	BALL STUD - F/GAS SPRING .39” - 5/16” -18
11C	126263-08-02B	EA	BRACKET - GAS SPRING W/CENTERED BALL STUD - E-COATED
11C	126263-19-02B	EA	BRACKET - GAS SPRING W/BALL STUD - E-COATED
12C	130798-01-02B	EA	GUIDE - POCKET DOOR - E-COATED
13C	132871-02-02B	EA	BRACKET/L-ANGLE W/HOLES - 1.9" X 2.8" - E-COATED
14C	133313-01-03A	EA	PULL - DOOR/DWR - CHROME/BRASS - SPIRIT 300 SERIES, SUNDANCER AND SUNRISE
15C	136944-01-01A	EA	SLIDE - DRAWER/RIGHT HAND - 13.8"
16C	136944-02-01A	EA	SLIDE - CABINET/RIGHT HAND - 13.8"
17C	136944-03-01A	EA	SLIDE - DRAWER/LEFT HAND - 13.8"
18C	136944-04-01A	EA	SLIDE - CABINET/LEFT HAND - 13.8"
19C	137445-01-N42	EA	STOP - F/SLIDING DOOR - PORTSMOUTH OAK
19C	137445-01-P46	EA	STOP - F/SLIDING DOOR - CONCERT CHERRY
19C	137445-01-P56	EA	STOP - F/SLIDING DOOR - WASHED MAPLE
19C	137445-01-S67	EA	STOP - F/SLIDING DOOR - SIERRA MAPLE
20C	137445-02-P45	EA	STOP - F/SLIDING DOOR - PORTSMOUTH OAK
20C	137445-02-P46	EA	STOP - F/SLIDING DOOR - CONCERT CHERRY
20C	137445-02-P56	EA	STOP - F/SLIDING DOOR - WASHED MAPLE
20C	137445-02-S67	EA	STOP - F/SLIDING DOOR - SIERRA MAPLE
21C	137445-03-T77	EA	STOP - F/SLIDING DOOR - PORTSMOUTH OAK
21C	137445-03-T78	EA	STOP - F/SLIDING DOOR - CONCERT CHERRY
21C	137445-03-T79	EA	STOP - F/SLIDING DOOR - WASHED MAPLE
21C	137445-03-T80	EA	STOP - F/SLIDING DOOR - SIERRA MAPLE

COPYRIGHT © 2006 WINNEBAGO INDUSTRIES INC.

INTERIOR FINISH GROUP (CONTINUED)

HARDWARE (CONTINUED)

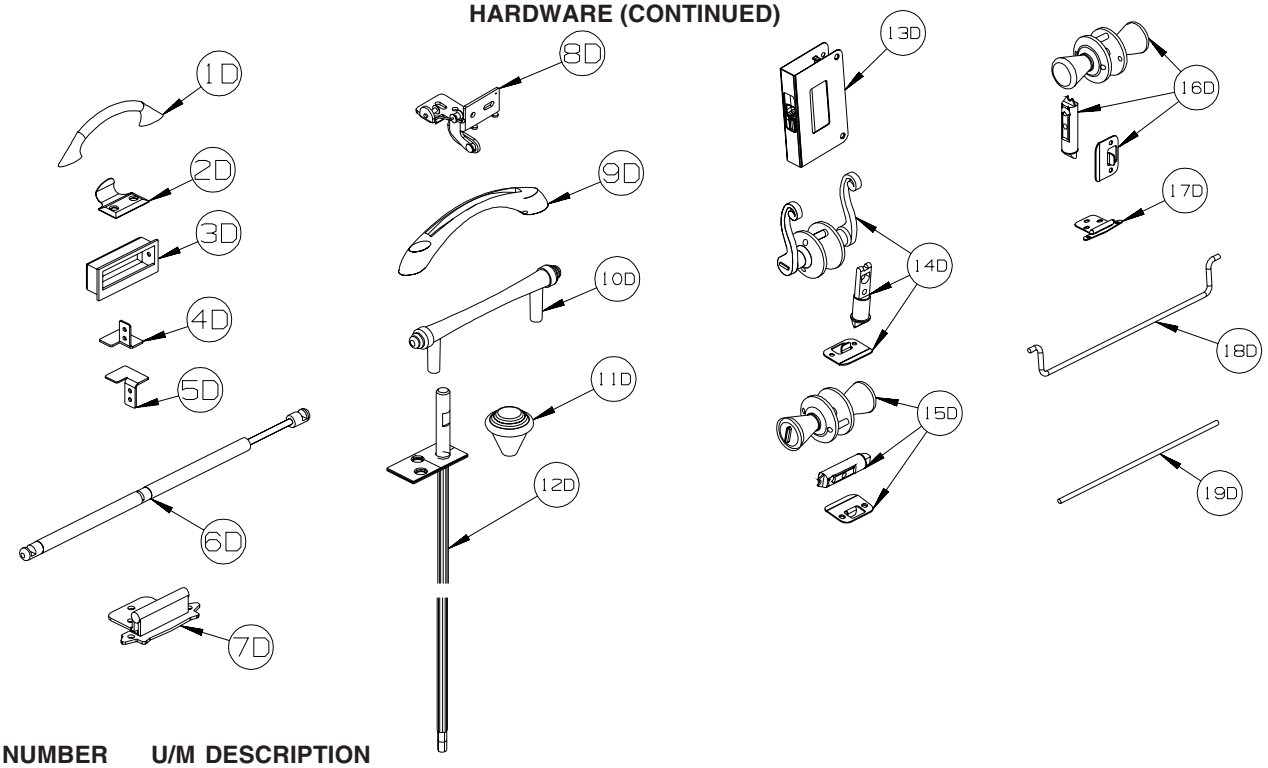

KEY	PART NUMBER	U/M	DESCRIPTION
1D	137446-01-01A	EA	PULL - CABINET - CHROME/BRASS - SPIRIT 300 SERIES, SUNOVA D-SERIES
2D	137463-01-01A	EA	LIFT - HOOK - SATIN BRASS
2D	137463-01-02A	EA	LIFT - HOOK - PEWTER
3D	139136-01-02A	EA	HANDLE - .75” RECESSED - PEWTER
3D	139136-02-01A	EA	HANDLE - .35” RECESSED - BRASS
3D	139136-02-02A	EA	HANDLE - .35” RECESSED - PEWTER
4D	139264-01-02B	EA	STOP - DOOR - TAMBOUR/RH HAND - E-COATED
5D	139264-02-02B	EA	STOP - DOOR - TAMBOUR/LH HAND - E-COATED
6D	142569-07-000	EA	SPRING/GAS - 20 LB - 20" EXTENDED/12" COMPRESSED
6D	142569-15-000	EA	SPRING/GAS - 120 LB - 20" EXTENDED/12" COMPRESSED
6D	142569-16-000	EA	SPRING/GAS - 90 LB - 20" EXTENDED/12" COMPRESSED
6D	142569-29-000	EA	SPRING/GAS - 20 LB - 9.9" EXTENDED/5.9" COMPRESSED
7D	143468-02-03A	EA	HINGE - SELF CLOSING - SATIN NICKEL
8D	144488-01-02A	EA	HINGE - CABINET - NICKEL
9D	144917-01-01A	EA	PULL - DRAWER - SATIN NICKEL - TOUR R-SERIES
10D	145172-01-02A	EA	PULL - CABINET DOOR - CHROME - ADVENTURER G-SERIES, JOURNEY P-SERIES
11D	145172-02-02A	EA	KNOB - CABINET DOOR - CHROME - ADVENTURER G-SERIES, JOURNEY P-SERIES
12D	145939-03-01A	EA	ROD/LATCH - AISLE DOOR - BRASS
13D	145939-04-02A	EA	LATCH/SLIDE - AISLE DOOR(1" THICK DOOR)-NICKEL/BLACK SLIDE
14D	146064-01-01A	EA	LOCK/PRIVACY (LOCKING) LEVER STYLE - POLISHED BRASS
14D	146064-01-02A	EA	LOCK/PRIVACY (LOCKING) LEVER STYLE - SATIN PEWTER
15D	146064-05-01A	EA	LOCK/PRIVACY (LOCKING) KNOB STYLE - SATIN NICKEL
16D	146064-06-01A	EA	LOCK/PASSAGE (NON LOCKING) KNOB STYLE - SATIN NICKEL
17D	146553-01-01A	EA	HINGE - CABINET DOOR - BURNISHED BRASS
17D	146553-01-03A	EA	HINGE - CABINET DOOR - SATIN NICKEL
18D	146801-01-01A	EA	ROD/TOWEL BAR (OFFSET) - BRASS
18D	146801-01-02A	EA	ROD/TOWEL BAR (OFFSET) - PEWTER
19D	146840-03-02A	EA	ROD - .25" X 11.7" - PEWTER
19D	146840-04-02A	EA	ROD - .25" X 13.1" - PEWTER
19D	146840-05-02A	EA	ROD - .25" X 14.8" - PEWTER
19D	146840-07-02A	EA	ROD - .25" X 4.2" - PEWTER

COPYRIGHT © 2006 WINNEBAGO INDUSTRIES INC.

INTERIOR FINISH GROUP (CONTINUED)

HARDWARE (CONTINUED)

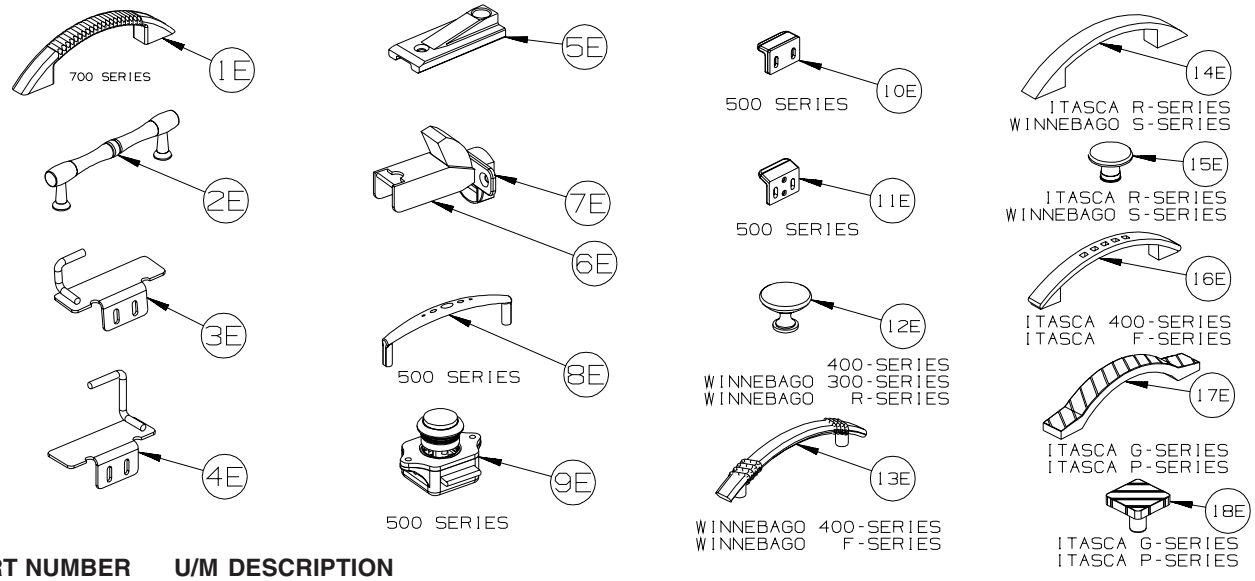

KEY	PART NUMBER	U/M	DESCRIPTION
1E	148816-01-01A	EA	PULL - CABINET DOOR - POLISHED BRASS - 331K ONLY
1E	148816-01-02A	EA	PULL - CABINET DOOR - NICKEL - ASPECT, CAMBRIA 700-SERIES
2E	149090-01-02A	EA	PULL - CABINET DOOR - NICKEL - OUTLOOK 300-SERIES, SIGHTSEER D-SERIES
3E	149607-01-02B	EA	GUIDE - F/POCKET DOOR - 1.6” BENT ROD - E-COATED
3E	149607-03-02B	EA	GUIDE - F/POCKET DOOR - 2.9” BENT ROD - E-COATED
4E	149607-04-02B	EA	GUIDE - F/POCKET DOOR - E-COATED
5E	150983-01-01A	EA	STRIKE/BLOCK - WEDGE STYLE - F/SLIDE DOOR - 3" X 1.2" - BLACK
6E	151305-01-01A	EA	HINGE - CONCEALED/SELF CLOSING - BRASS
7E	151305-02-01A	EA	PLATE/MOUNTING - F/HINGE - WHITE
8E	151372-01-01A	EA	PULL - DOOR/DRAWER - NICKLE - VIEW & NAVION 500-SERIES
9E	151380-01-01A	EA	LATCH - CABINET DOOR - PUSH BUTTON - VIEW & NAVION 500-SERIES
10E	151380-02-01A	EA	STRIKE - CABINET DOOR - VIEW & NAVION 500-SERIES
11E	151380-03-01A	EA	STRIKE - CABINET DOOR - VIEW & NAVION 500-SERIES
12E	152080-01-01A	EA	PULL-NICKEL - OUTLOOK 300-SERIES, MINNIE WINNIE, SUNDANCER 400-SERIES, TOUR R-SERIES
13E	152302-01-01A	EA	PULL - CABINET DOOR - SATIN NICKEL - MINNIE WINNIE 400-SERIES, VOYAGE F-SERIES
14E	152304-01-01A	EA	PULL - CABINET DOOR - BRONZE- ELLIPSE R-SERIES
14E	152304-01-02A	EA	PULL - CABINET DOOR - SATIN NICKEL - VECTRA S-SERIES
15E	152305-01-01A	EA	KNOB - DOOR/DRAWER - BRONZE - ELLIPSE R-SERIES
15E	152305-01-02A	EA	KNOB - DOOR/DRAWER - SATIN NICKEL- VECTRA S-SERIES
16E	152950-01-01A	EA	PULL - DOOR/DRAWER - BRUSHED NICKEL - SUNDANCER 400-SERIES, SUNRISE F-SERIES
17E	152951-01-01A	EA	PULL - DOOR/DRAWER - PEWTER - SUNCRUISER G-SERIES, MERIDIAN P-SERIES
18E	152952-01-01A	EA	PULL - KNOB/DRAWER - PEWTER - SUNCRUISER G-SERIES, MERIDIAN P-SERIES

COPYRIGHT © 2006 WINNEBAGO INDUSTRIES INC.

INTERIOR FINISH GROUP (CONTINUED)

HARDWARE (CONTINUED)

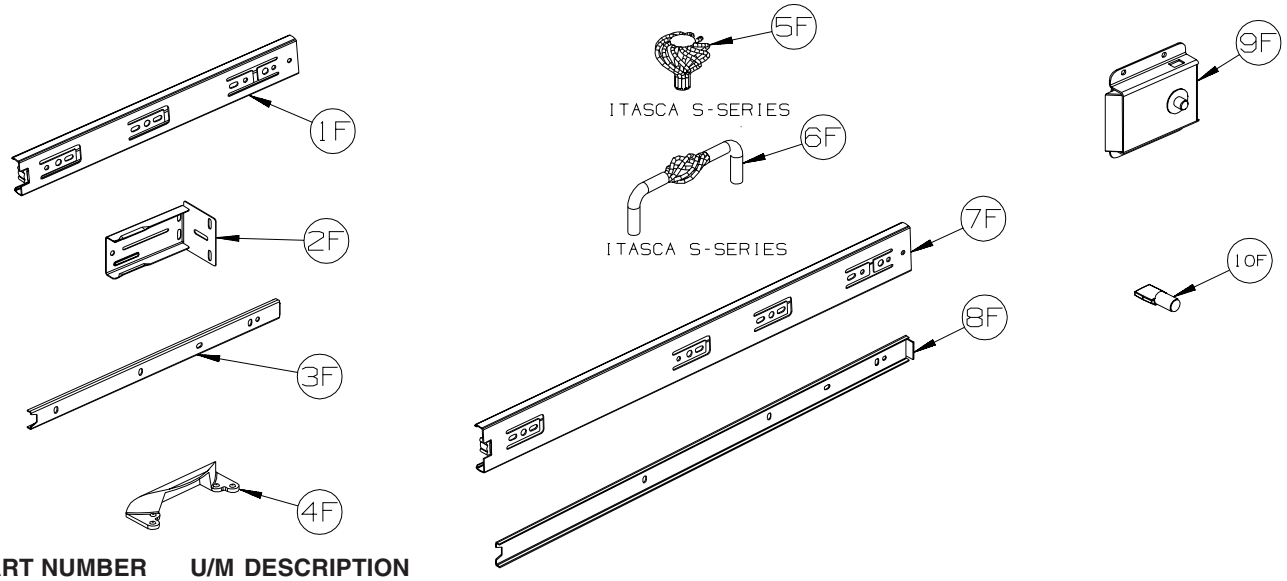

KEY	PART NUMBER	U/M	DESCRIPTION
1F	153000-01-01A	EA	SLIDE - CABINET MOUNT - 11.8"
1F	153000-03-01A	EA	SLIDE - CABINET MOUNT - 13.8"
1F	153000-05-01A	EA	SLIDE - CABINET MOUNT - 15.7"
1F	153000-07-01A	EA	SLIDE - CABINET MOUNT - 17.7"
1F	153000-09-01A	EA	SLIDE - CABINET MOUNT - 19.7"
1F	153000-11-01A	EA	SLIDE - CABINET MOUNT - 21.6"
1F	153000-14-01A	EA	SLIDE - CABINET MOUNT - 23.6"
1F	153000-16-01A	EA	SLIDE - CABINET MOUNT - 7.9"
1F	153000-18-01A	EA	SLIDE - CABINET MOUNT - 9.8"
2F	153000-13-01A	EA	BACKSOCKET - DRAWER SLIDE
3F	153000-02-01A	EA	SLIDE - DRAWER MOUNT - 11.8"
3F	153000-04-01A	EA	SLIDE - DRAWER MOUNT - 13.8"
3F	153000-06-01A	EA	SLIDE - DRAWER MOUNT - 15.7"
3F	153000-08-01A	EA	SLIDE - DRAWER MOUNT - 17.7"
3F	153000-10-01A	EA	SLIDE - DRAWER MOUNT - 19.7"
3F	153000-12-01A	EA	SLIDE - DRAWER MOUNT - 21.6"
3F	153000-15-01A	EA	SLIDE - DRAWER MOUNT - 23.4"
3F	153000-17-01A	EA	SLIDE - DRAWER MOUNT - 7.9"
3F	153000-19-01A	EA	SLIDE - DRAWER MOUNT - 9.8"
4F	153308-01-01A	EA	PULL - VANITY STOOL - SATIN NICKEL
5F	153335-01-01A	EA	PULL - KNOB - DOOR/DRAWER - ANTIQUE PEWTER - HORIZON S-SERIES
6F	153335-02-01A	EA	PULL - DOOR/DRAWER - ANTIQUE PEWTER - HORIZON S-SERIES
7F	153352-01-01A	EA	SLIDE - PANTRY - 19.7" - CABINET MOUNT
8F	153352-02-01A	EA	SLIDE - PANTRY - 19.5" - DRAWER MOUNT
9F	153353-01-01A	EA	LATCH - SLIDING/FLUSH - BLACK
10F	154385-01-01A	EA	PIN - SUPPORT/GLASS DOOR - 1/4" - BRASS
10F	154385-01-02A	EA	PIN - SUPPORT/GLASS DOOR - 1/4" - NICKEL

COPYRIGHT © 2006 WINNEBAGO INDUSTRIES INC.

LABELS GROUP

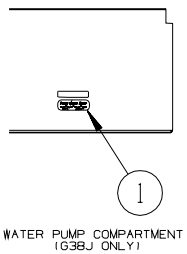

WATER PUMP COMPARTMENT
(G38J ONLY)

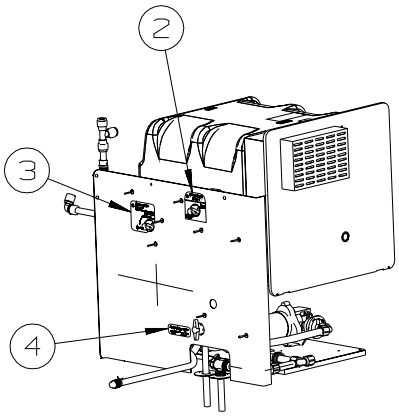

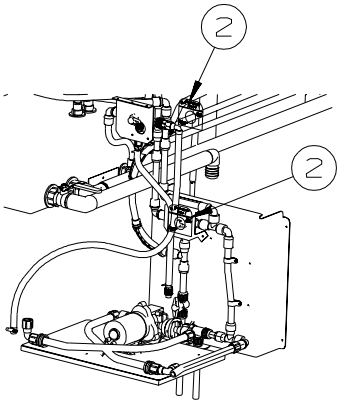

G38A ONLY

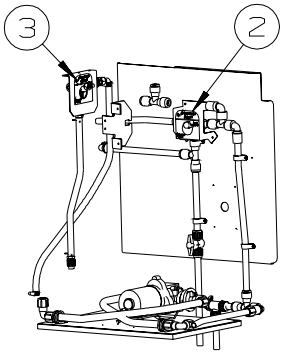

G38J ONLY

KEY	PART NUMBER	U/M	DESCRIPTION
1	154301-01-01A	EA	LABEL - FRESH TANK DRAIN - PANTONE/CLEAR
2	152539-01-01A	EA	LABEL - BYPASS
3	152545-01-01A	EA	LABEL - WINTERIZATION
4	154302-01-01A	EA	LABEL - FRESH WATER DRAIN - PANTONE/CLEAR

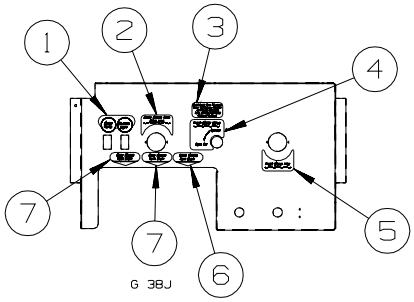

G 38J

KEY	PART NUMBER	U/M	DESCRIPTION
1	152544-02-01A	EA	LABEL - SWITCHES
2	152546-01-01A	EA	LABEL - TANK FLUSH - PANTONE/CLEAR
3	154292-01-01A	EA	LABEL - TANK FILL VALVE
4	152548-01-01A	EA	LABEL - VALVE/FRESH
5	152538-01-01A	EA	LABEL - FRESH WATER - PANTONE/CLEAR
6	152543-03-01A	EA	LABEL - BLACK WASTE
7	152541-03-01A	EA	LABEL - GRAY WASTE

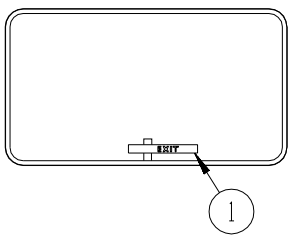

EXIT WINDOW
(POP-OUT STYLE)

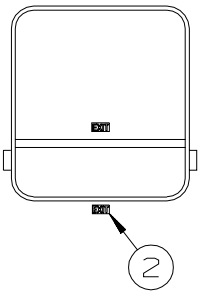

EXIT WINDOW
(HINGE STYLE)

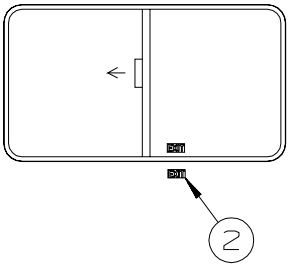

EXIT WINDOW
(SLIDER STYLE)

KEY	PART NUMBER	U/M	DESCRIPTION
1	107571-01-000	EA	LABEL - EXIT/ESCAPE WINDOW
2	039290-01-000	EA	LABEL - WARNING - EXIT

COPYRIGHT © 2006 WINNEBAGO INDUSTRIES INC.

LABELS GROUP (CONTINUED)

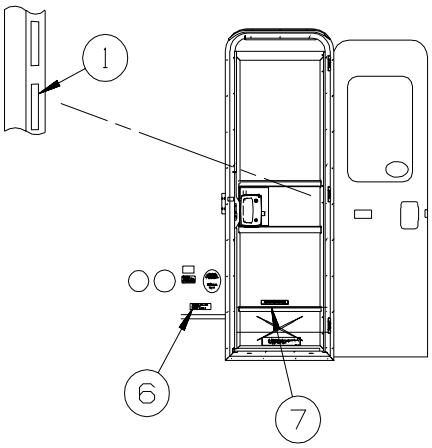

ENTRANCE DOOR

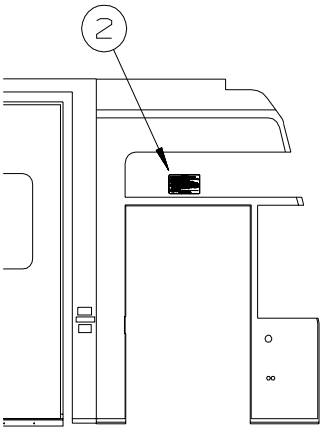

DRIVERS DOOR
(G-SERIES)

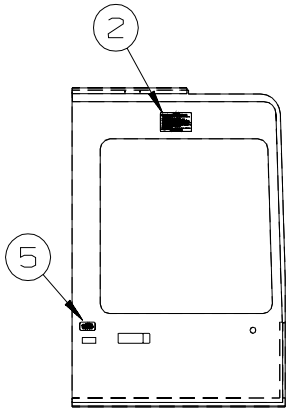

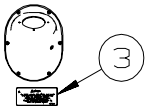

GASOLINE ONLY

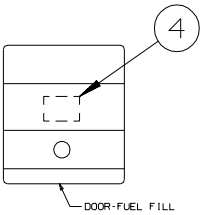

DOOR FUEL FILL
DIESEL ONLY

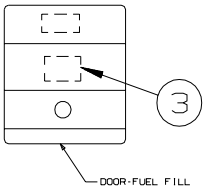

DOOR FUEL FILL
GASOLINE ONLY

KEY	PART NUMBER	U/M	DESCRIPTION
1	135869-01-02A	EA	LABEL - MERCURY CONTENT - WHITE ON CLEAR
1	135869-01-01A	EA	LABEL - MERCURY CONTENT - BLACK 0N CLEAR
2	056259-01-000	EA	LABEL - SAFETY CHECK LIST
3	124519-01-02A	EA	LABEL - WARNING/REFUELING - WHITE ON CLEAR
3	124519-01-01A	EA	LABEL - WARNING/REFUELING - BLACK ON CLEAR
3	124519-02-02A	EA	LABEL - WARNING/REFUELING - WHITE ON CLEAR - CSA - CANADIAN
3	124519-02-01A	EA	LABEL - WARNING/REFUELING - BLACK ON CLEAR - CSA - CANADIAN
4	068383-01-000	EA	LABEL - DIESEL FUEL
5	099689-01-000	EA	LABEL - WARNING - CANCER/TOXICITY
6	099509-01-000	EA	LABEL - AWNING INSTALLATION
7	065748-01-000	EA	LABEL - WARNING - BATTERY CHARGING - UL
7	065748-02-000	EA	LABEL - WARNING - BATTERY CHARGING -CSA - CANADIAN

COPYRIGHT © 2006 WINNEBAGO INDUSTRIES INC.

LABELS GROUP (CONTINUED)

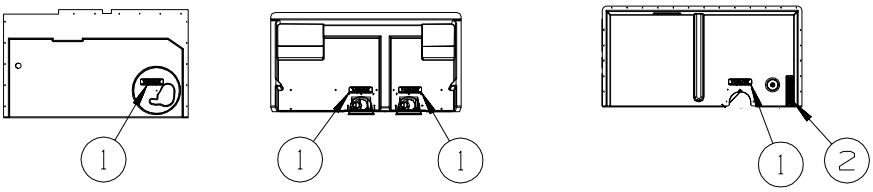

TYPICAL WATER CENTER COMPARTMENTS

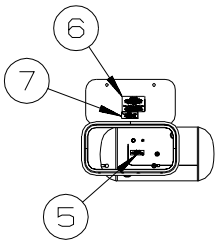

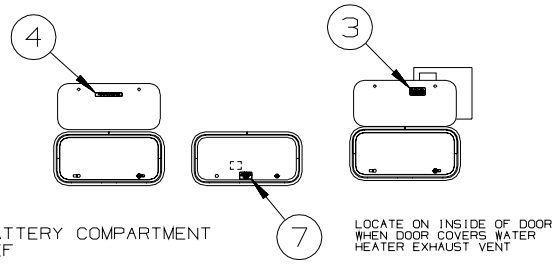

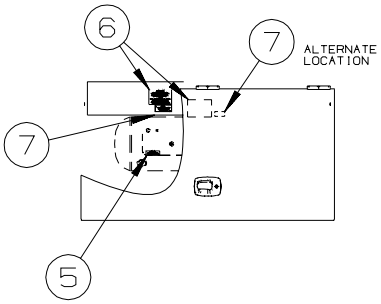

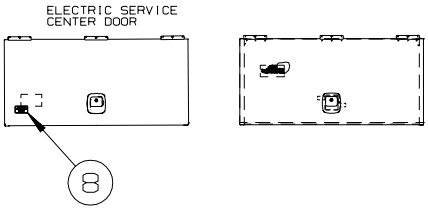

KEY	PART NUMBER	U/M	DESCRIPTION
1	123562-01-000	EA	LABEL - SERVICE/UTILITY ACCESS
2	147845-01-01A	EA	LABEL - DRIP VALVE
3	113402-01-000	EA	LABEL - CAUTION - WATER HEATER EXHAUST
4	065748-01-000	EA	LABEL - WARNING - BATTERY CHARGING - UL
4	065748-02-000	EA	LABEL - WARNING - BATTERY CHARGING - CSA - CANADIAN
5	079965-01-000	EA	LABEL - LPG - 80% CAPACITY
6	124520-01-02A	EA	LABEL - LP GAS ONLY - WHITE ON CLEAR
6	124520-01-01A	EA	LABEL - LP GAS ONLY - BLACK ON CLEAR
6	023769-01-000	EA	LABEL - WARNING - LPG - CANADIAN - CANADIAN
7	124519-01-02A	EA	LABEL - WARNING/REFUELING - WHITE ON CLEAR
7	124519-01-01A	EA	LABEL - WARNING/REFUELING - BLACK ON CLEAR
7	124519-02-02A	EA	LABEL - WARNING/REFUELING - WHITE ON CLEAR - CSA - CANADIAN
7	124519-02-01A	EA	LABEL - WARNING/REFUELING - BLACK ON CLEAR - CSA - CANADIAN
8	125306-01-01A	EA	LABEL - ELECTRICAL ENTRANCE - 110V 30 AMP - BLACK ON CLEAR
8	125306-01-02A	EA	LABEL - ELECTRICAL ENTRANCE - 110V 30 AMP - WHITE ON CLEAR
8	125306-04-01A	EA	LABEL - ELECTRICAL ENTRANCE-120/20V 50 AMP-BLACK ON CLEAR
8	125306-04-02A	EA	LABEL - ELECTRICAL ENTRANCE-120/240V 50 AMP-WHITE ON CLEAR

COPYRIGHT © 2006 WINNEBAGO INDUSTRIES INC.

LABELS GROUP (CONTINUED)

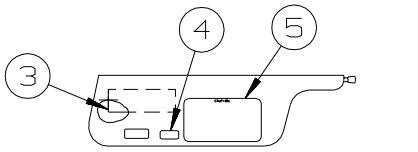

LABELS SHALL BE LOCATED ON OPPOSITE SIDE OF VISOR THAT THE AIR BAG LABEL IS INSTALLED ON

D, F AND C-BODIES

TYPICAL SEAT AND BELT CONFIGURATIONS

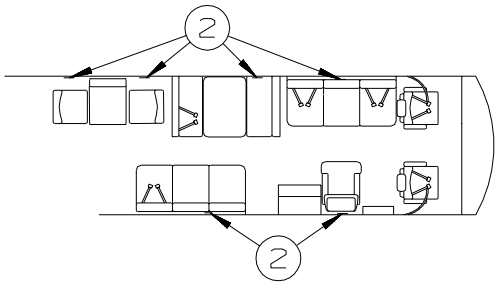

FOLDING CHAIRS

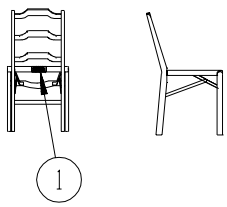

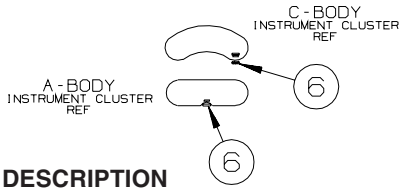

KEY	PART NUMBER	U/M	DESCRIPTION
1	134537-01-01A	EA	LABEL - OCCUPANCY - CHAIR - US
1	134537-02-01A	EA	LABEL - OCCUPANCY - CHAIR - CSA - CANADIAN
2	134538-01-01A	EA	LABEL - OCCUPANCY - NO SEAT BELT - BLACK ON CLEAR - US
2	134538-02-01A	EA	LABEL - OCCUPANCY - NO SEAT BELT - BLACK ON CLEAR - CSA - CANADIAN
3	126611-01-000	EA	LABEL - AIR BAG - VISOR
4	099689-01-000	EA	LABEL - WARNING - CANCER/TOXICITY
5	056259-01-000	EA	LABEL - SAFETY CHECK LIST
6	155692-01-01A	EA	LABEL - ODOMETER - READ IN MILE - BLACK/WHITE
6	155692-01-02A	EA	LABEL - ODOMETER - READ IN MILE - WHITE/CLEAR

COPYRIGHT © 2006 WINNEBAGO INDUSTRIES INC.

LABELS GROUP (CONTINUED)

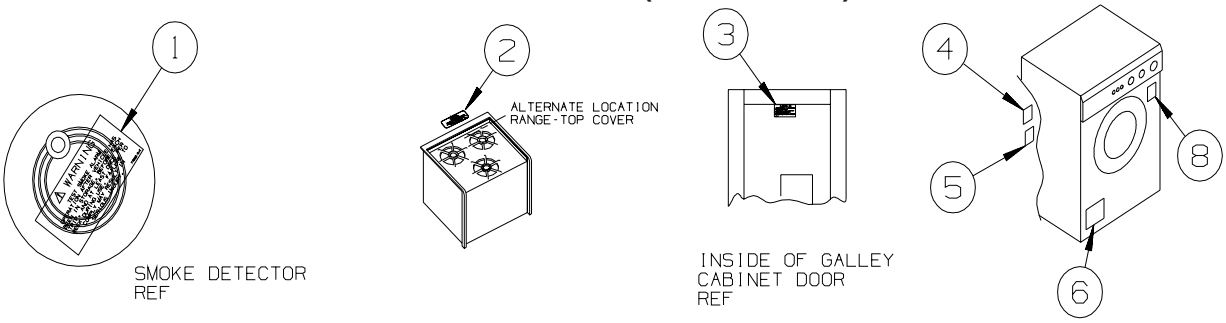

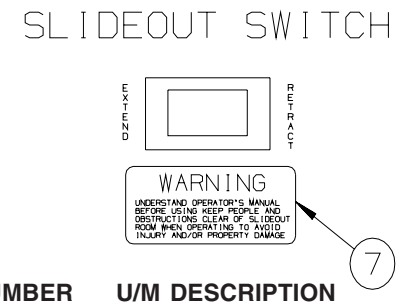

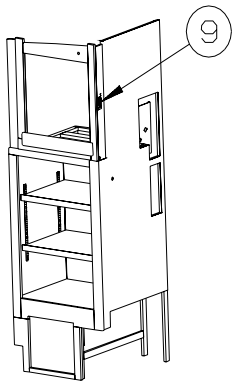

SWING OUT/SLIDING TV INSTL

KEY	PART NUMBER	U/M	DESCRIPTION
1	077956-01-000	EA	LABEL - WARNING/SMOKE DETECTOR
2	134539-01-01A	EA	LABEL - WARNING - STOVE/HEATING - US - BLACK ON CLEAR
2	134540-01-01A	EA	LABEL - WARNING - STOVE/HEATING - CSA - BLACK ON CLEAR - CANADIAN
3	073998-01-000	EA	LABEL - LPG/ODOR WARNING
4	147525-01-000	EA	LABEL - DRYER VENT CUTOUT
5	147524-01-000	EA	LABEL - DRYER VENTING
6	130670-01-01A	EA	LABEL - CAUTION DRYER VENTING - BLACK ON CLEAR - WASHER/DRYER
7	116549-02-000	EA	LABEL - WARNING - SLIDEOUT - 1.18” x 3”
8	153640-01-01A	EA	LABEL - WINTERIZATION - WASHER DRYER - WASHER/DRYER
9	079966-01-000	EA	LABEL - WARNING - STOWED - MOTION

COPYRIGHT © 2006 WINNEBAGO INDUSTRIES INC.

LABELS GROUP (CONTINUED)

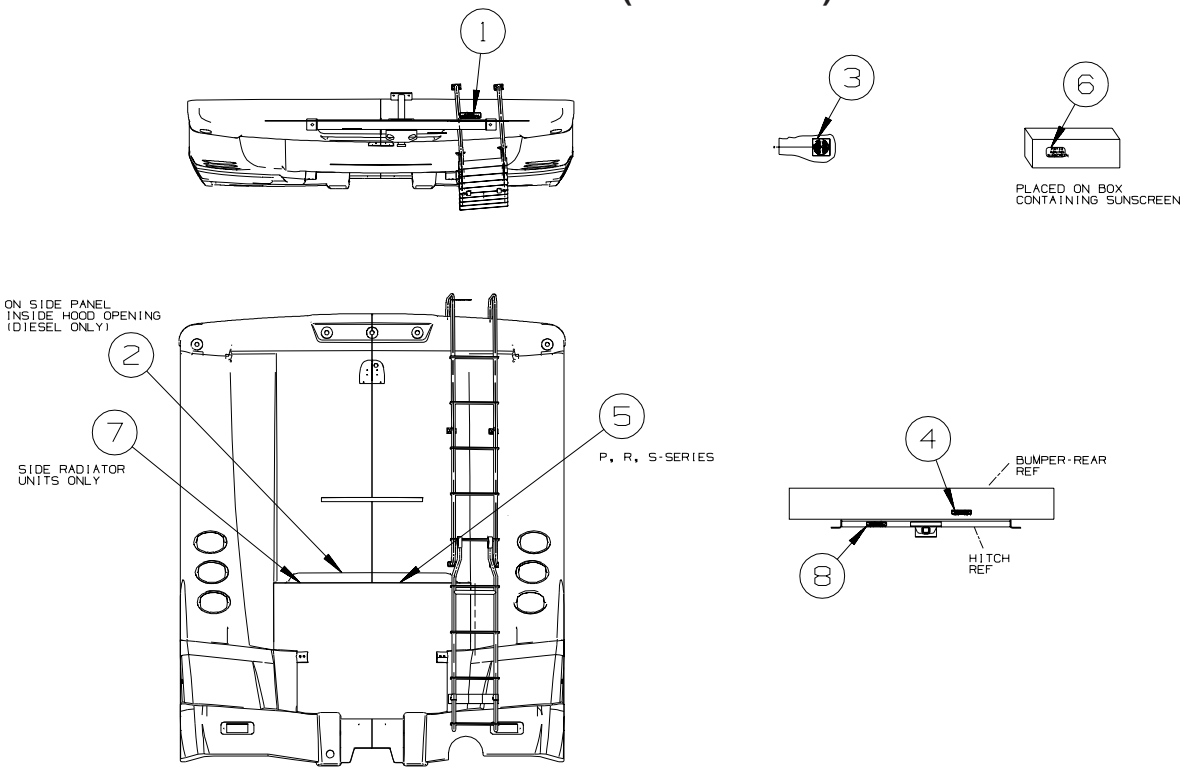

KEY	PART NUMBER	U/M	DESCRIPTION
1	128218-01-01A	EA	LABEL - WARNING - SLIPPERY ROOF
2	116756-03-000	EA	LABEL - WARNING - ETHER/STARTING - RED W/WHITE BACKGROUND
3	120431-01-000	EA	LABEL - LOCATION - COAXIAL CABLE/SATELLITE ANTENNA
4	129669-01-01A	EA	LABEL - HITCH/VEHICLE RATE - 350 - WHITE ON CLEAR - 500 SERIES & F35D ONLY
4	129669-01-02A	EA	LABEL - HITCH/VEHICLE RATE - 350 - BLACK ON CLEAR - 500 SERIES & F35D ONLY
4	129669-02-01A	EA	LABEL - HITCH/VEHICLE RATE - 500 - WHITE ON CLEAR
4	129669-02-02A	EA	LABEL - HITCH/VEHICLE RATE - 500 - BLACK ON CLEAR
5	156213-01-01A	EA	LABEL - CHASSIS BATTERY DISCONNECT - WHITE/BLACK
6	156214-01-01A	EA	LABEL - PATIO AWNING SUNSCREEN - WHITE/BLACK
7	134359-01-01A	EA	LABEL - WARNING - DRIVE BELTS
8	129669-01-01A	EA	LABEL - HITCH/VEHICLE RATE - 350 - WHITE ON CLEAR - 300, 400, 500, 700 SERIES & F35D ONLY
8	129669-01-02A	EA	LABEL - HITCH/VEHICLE RATE - 350 - BLACK ON CLEAR - 300, 400, 500, 700 SERIES & F35D ONLY
8	129669-02-01A	EA	LABEL - HITCH/VEHICLE RATE - 500 - WHITE ON CLEAR
8	129669-02-02A	EA	LABEL - HITCH/VEHICLE RATE - 500 - BLACK ON CLEAR

COPYRIGHT © 2006 WINNEBAGO INDUSTRIES INC.

LP GROUP
LP SYSTEM

KEY	PART NUMBER	U/M	DESCRIPTION
	010265-01-000	EA	ELBOW - BRASS - 90 DEGREE - 3/8"F X 1/2"FPT
	010323-01-000	EA	ADAPTER - 3/8"F X 1/2"MPT - BRASS
	010326-01-000	EA	ADAPTER - FLARE - W/CONE GASKET - 3/8"F X 1/2"F
	010329-01-000	EA	ADAPTER - 1/2"F X 1/2"MPT - BRASS
	010377-02-000	EA	NUT - 3/8" FLARE - FORGED - BRASS
	010380-02-000	EA	NUT - 1/2" FLARE - FORGED - BRASS
	010589-01-000	EA	NIPPLE - PIPE - 1/2” X 1 1/2” - BLACK
	024250-01-000	EA	ADAPTER - BRASS - 3/8"F X 1/2"FPT
	040440-03-000	EA	TRANSMITTER - DIAL/SNAP-ON - 0-90 OHM 2 TERM(POWER/GROUND)
	045703-01-000	EA	HOSE - LP - 3/8"ID X 24" - 3/8"MPT X 1/2"F SWIVEL - U.S.
	045703-02-000	EA	HOSE - LP - 3/8"ID X 24" - 3/8"MPT X 1/2"F SWIVEL - CANADA
	045703-14-000	EA	HOSE - LP - 3/8"ID X 157.5" - 1/2"F SWIVEL X 1/2"F SWIVEL
	045703-15-000	EA	HOSE - LP - 3/8"ID X 142" - 1/2"F SWIVEL X 3/8"F SWIVEL
	045703-25-000	EA	HOSE - LP - 3/8"ID X 177" - 1/2"F SWIVEL X 3/8"M FL
	045703-31-000	EA	HOSE - LP - 3/8"ID X 214" - 1/2"F SWIVEL X 3/8"M FL
	106150-05-000	EA	REGULATOR - TWO STAGE
	144485-01-000	EA	COMPARTMENT - LP REGULATOR
*	144116-01-000	EA	TANK - LP - 100 LB - 14"D X 47"L

***COMPONENT PARTS LISTED LATER IN THIS GROUP**

COMPONENT PARTS FOR LP SYSTEM

144116-01-000

KEY	PART NUMBER	U/M	DESCRIPTION	VENDOR NO.
	040421-01-712	EA	VALVE-SERV. W/O VAPOR RELIEF	29000853
	040421-01-713	EA	VALVE-RELIEF 1" W/SPRING 7"	V-20479
	088253-09-700	EA	SENDING UNIT-F/SNAP ON DIAL	SG14C0001466
	144116-01-700	EA	VALVE-OUTAGE(NO STEM REMOVE)	V20058
	144116-01-701	EA	VALVE/FILL 80 % W/YELLOW CAP	V13414

COPYRIGHT © 2006 WINNEBAGO INDUSTRIES INC.

SEALANTS & FASTENERS GROUP

SEALANTS & ADHESIVES

KEY	PART NUMBER	U/M	DESCRIPTION
	004001-02-000	EA	GUN - PLEXUS ADHESIVE - W/O NOZZLE
	004001-05-000	EA	ADHESIVE - SCOTCH-WELD - 3M DP100 - CLEAR - 50ML
	004011-01-000	EA	ADHESIVE-3M-4475 TUBE
	010405-02-000	EA	TAPE - THREAD SEALING - 3/8"
	034552-06-000	EA	SILICONE - TUBE - W/NOZZLE - OFF WHITE
	063642-01-000	FT	TAPE - ADHESIVE - .4" X 1.5" X 180'
	064075-07-000	FT	SEAL - BULB - W/WIRED U CHANNEL - .3" X .5" CHANNEL-BLACK
	067788-01-000	EA	ADHESIVE - SPRAY - 3M - 19.5 OZ AEROSOL CAN
	069640-01-000	FT	SEALER - RIBBON - 1/4"DIAMETER X 30 FT - BLACK OR GRAY
	069640-02-000	FT	SEALER - TAPE - 1/8"THICK X 1/2"WIDE X 60 FT - GRAY
	069640-03-000	FT	SEALER - TAPE - 1/8"THICK X 3/4"WIDE X 60 FT - BLACK
	069640-07-000	FT	SEALER - TAPE - 3/32"THICK X 2"WIDE X 45 FT - GRAY
	069640-09-000	FT	SEALER - TAPE - 1/32"THICK X 2 1/2"WIDE X 80 FT - BRT WHT
	069640-10-000	FT	SEALER - TAPE - 1/32"THICK X 1 1/2"WIDE X 90 FT - BRT WHT
	069640-11-000	FT	SEALER - TAPE - 3/16"THICK X 3/8"WIDE X 40 FT - BLACK
	069640-13-000	FT	SEALER - TAPE - 3/32"THICK X 2"WIDE X 45 FT - BLACK
	069640-14-000	FT	SEALER - TAPE - 1/16"THICK X 1"WIDE X 100 FT - BLACK
	069640-15-000	FT	SEALER - TAPE - 1/16"THICK X 3/8"WIDE X 100 FT - BRT WHT
	069640-17-000	FT	SEALER - TAPE - 1/32"THICK X 1"WIDE X 150 FT - GRAY
	069640-18-000	FT	SEALER - TAPE - 1/8"THICK X 1/2"WIDE X 60 FT - BRT WHT
	069640-19-000	FT	SEALER - TAPE - 1/8"THICK X 3/4"WIDE X 60 FT - BRT WHT
	069640-20-000	FT	SEALER - TAPE - 1/8"THICK X 1/2"WIDE X 60 FT - BLACK
	069640-21-000	FT	SEALER - TAPE - 1/16"THICK X 1/2"WIDE X 100 FT - BRT WHT
	069640-22-000	FT	SEALER - TAPE - 1/32"THICK X 1/4"WIDE X 200 FT - BRT WHT
	069640-23-000	FT	SEALER - TAPE - 1/16"THICK X 3/4"WIDE X 100 FT - BRT WHT
	069640-27-000	FT	SEALER - TAPE - 1/16"THICK X 2 1/4"WIDE X 50 FT - BRT WHT
	069640-28-000	FT	SEALER - TAPE - 1/32"THICK X 1 7/8"WIDE X 90 FT - GRAY
	069640-30-000	FT	SEALER - TAPE - 1/32"THICK X 5/8"WIDE X 50 FT - GRAY
	069640-31-000	FT	SEALER - TAPE - 1/4"THICK X 3/4"WIDE X 15 FT - BLACK
	069640-32-000	FT	SEALER - TAPE - 1/16"THICK X 3/8"WIDE X 100 FT - BLACK
	069640-33-000	FT	SEALER - RIBBON - 3/8"DIAMETER X 20 FT - BLACK
	069640-34-000	FT	SEALER - RIBBON - 1/4"DIAMETER X 30 FT - BRIGHT WHITE
	072889-10-000	EA	SEALANT/URETHANE (HV) - TUBE W/NOZZLE TIP - BRIGHT WHITE
	072889-13-000	EA	SEALANT/URETHANE (LV) - TUBE W/NOZZLE TIP - VW WHITE
	072889-28-000	EA	SEALANT/URETHANE-10 OZ TUBE W/NOZZLE-SELF LEVELING-BRT WHT
	076322-01-000	FT	TAPE-DOUBLE COATED/ADHESIVE BK-.03"THK X .8"W X 216'- WHT
	076322-02-000	FT	TAPE-DOUBLE COATED/ADHESIVE BK-.05"THK X 1"W X 108' - WHT
	076322-03-000	FT	TAPE-DOUBLE COATED/ADHESIVE BK-.05"THK X .5"W X 108' - WHT
	076322-05-000	FT	TAPE-DOUBLE COATED/ADHESIVE BK-.05"THK X .8"W X 108' - WHT
	076322-07-000	FT	TAPE-DOUBLE COATED/ADHESIVE BK-.05"THK X .5"W X 200' - BLK
	076322-11-000	FT	TAPE-DOUBLE COATED/ADHESIVE BK-.02"THK X 1"W X 216' - CLR
	076322-13-000	FT	TAPE - FOAM/DOUBLE COATED - .020"THK X .75"W - CLEAR
	076322-21-000	FT	TAPE - FOAM/DOUBLE COATED - .045"THK X .50"W
	076322-22-000	FT	TAPE - FOAM/DOUBLE COATED - .045"THK X .75"W
	076322-23-000	FT	TAPE - FOAM/DOUBLE COATED - .045"THK X 1"W
	076322-25-000	FT	TAPE - FOAM/DOUBLE COATED - .025"THK X .5"W
	086276-01-000	EA	TAPE - DOUBLE SIDED - 1/2" WIDE X 108' LONG (SOLD BY ROLL)
	088479-01-000	EA	TAPE - ALUMINUM - 3"
	090340-01-000	FT	SEAL - FOAM - CLOSED CELL - 1/4" X 1/2" X 50'
	091255-02-000	FT	SEAL - ADHESIVE BACKED/FOAM - 3/64"THICK X 3/16"W X 1000'
	091255-03-000	FT	SEAL - ADHESIVE BACKED/FOAM - 1/4" THICK X 1/4"W X 1000'
	094401-01-000	EA	SEALER - BODY SEAM - FLEXICLEAR
	094401-04-000	EA	SEALER - BODY SEAM - CLEAR
	094401-05-000	EA	SEALER - BODY SEAM - 20OZ BLACK
	094401-06-000	EA	SEALER - BODY SEAM - 12OZ BLACK
	094401-07-000	EA	SEALER - BODY SEAM - CLEAR
	098408-01-000	FT	SEAL - SPONGE RUBBER - CLOSED CELL
	099069-01-000	FT	SEAL - RUBBER - CLOSED SPONGE - .5" WIDE X .12" THICK-BLK
	099418-01-000	FT	SEAL - D-SECTION/ADHESIVE BACK - .44” X .44” - BLK RUBBER
	107828-01-000	EA	SEALANT - SB - 190 EVERSEAL
	108716-02-000	EA	SILICONE - W/NOZZLE - BUFF - SELF LEVELING
	110274-01-000	FT	TAPE - DOUBLE SIDED/FOAM - .45" X 1" X 216' - BLACK
	112864-01-000	FT	SEAL - FOAM/BUTYL COVERED - 3/8" X 35'
	112864-02-000	FT	FOAM - BUTYL COVERED - 5/16" X 44'

COPYRIGHT © 2006 WINNEBAGO INDUSTRIES INC.

SEALANTS & FASTENERS GROUP (CONTINUED)

SEALANTS & ADHESIVES (CONTINUED)

KEY	PART NUMBER	U/M	DESCRIPTION
	112864-04-000	FT	FOAM - BUTYL COVERED - 3/8" X 1/8"
	112901-02-000	EA	ADHESIVE - PLEXUS - MA330 - 50ML - GRAY
	112901-03-000	EA	ADHESIVE - PLEXUS - MA300 - 50ML - WHITE
	112902-01-000	EA	NOZZLE - ELEMENT - 3/8" X 24
	112902-03-000	EA	MIXER NOZZLE - F/GUN #00400102000 - SCOTCH-WELD & PLEXUS
	112902-04-000	EA	NOZZLE - ELEMENT - 1/4" X 3.5"
	112902-05-000	EA	NOZZLE - BAYONET - 3/8" X 18
	112902-06-000	EA	NOZZLE - ELEMENT - 1/2" X 32
	120074-02-03A	EA	SILICONE - TUBE - W/O NOZZLE - LOW ODOR - SMOKEY WHITE
	120534-01-01A	EA	TAPE - SCOTCH - 3M - 1/2" FINE LINE
	123244-01-000	FT	TAPE - DOUBLE SIDED/FOAM - 5/64"THICK X 3/4"WIDE X 108'
	123816-01-000	FT	TAPE - DOUBLE SIDED - 1" X .020" X 200' - CLEAR
	123816-02-000	FT	TAPE - DOUBLE SIDED - 1/2" X .035" X 200' - CLEAR
	123816-03-000	FT	TAPE - DOUBLE SIDED - 1/2" X .020" X 200' - CLEAR
	123816-04-000	FT	TAPE - DOUBLE SIDED - 6" X .0035" X 750' - CLEAR
	123816-06-000	FT	TAPE - DOUBLE SIDED - 3/4" X 3/4" X 200' - CLEAR
	123816-07-000	FT	TAPE - DOUBLE SIDED - 1 3/4" X 200' - CLEAR
	126427-01-000	EA	ADHESIVE - ALL PURPOSE - ABS/PVC
	126427-02-000	EA	PRIMER - CLEANER - FLEX PIPING
	131264-01-11A	EA	SILICONE - TUBE - W/NOZZLE - BEIGE
	131264-01-12A	EA	SILICONE - TUBE - W/NOZZLE - BONE
	131264-02-01A	EA	SILICONE - TUBE - W/NOZZLE - VW GRAY - BATH ONLY
	131264-03-01A	EA	SILICONE - TUBE - W/O NOZZLE - SELF LEVELING -BRIGHT WHITE
	131264-04-01A	EA	SILICONE/SEALANT/ADHESIVE - FAST CURE F/GLASS/VINYL - B/W
	131264-04-02A	EA	SILICONE/SEALANT/ADHESIVE-FAST CURE F/GLASS/VINYL-SOFT WHT
	131264-05-01A	EA	SILICONE/SEALANT - ODORLESS - TUBE - W/NOZZLE - BLACK
	131264-05-02A	EA	SILICONE/SEALANT - ODORLESS - TUBE - W/NOZZLE - CLEAR
	131384-01-000	EA	ADHESIVE - JET WELD - 10 OZ CARTRIDGE
	132892-07-01A	FT	SEAL - BULB/SINGLE - W/U CHANNEL - .5" X 1" - BLACK
	152038-01-01A	EA	TAPE - PRESERVATION SEAL - 2" X 36YD ROLL - BLACK
	154585-01-01A	FT	SEAL - FOAM TAPE - ADHESIVE BACK - 3/8" X 3/8" - GRAY
	154585-02-01A	FT	SEAL - FOAM TAPE - ADHESIVE BACK - 3/4" X 1/2" - GRAY
	154585-03-01A	FT	SEAL - FOAM TAPE - ADHESIVE 2 SIDED - 1/8" X 3/4" - BLACK
	154585-04-01A	FT	SEAL - FOAM TAPE - ADHESIVE BACK - 5/8" X 1/8" - WHITE
	900390-01-000	EA	NOZZLE - SILICONE TUBE - 2.5" LONG - W/EXTERNAL THREADS
	900390-03-000	EA	NOZZLE - SILICONE TUBE - 2 3/4" LONG W/INTERNAL THREADS
	900563-17-000	EA	TAPE - 2 SIDED, 2" X 36 YDS

BOLTS, NUTS AND WASHERS

KEY	PART NUMBER	U/M	DESCRIPTION
	0MD54F-06-000	EA	NUT - HEX W/SERATED FLANGE
	000C12-04-40B	EA	BOLT - HEX - 1/4-20 X 2 1/2 - GRADE #5 ZINC
	000C12-04-20F	EA	BOLT - HEX - 1/4-20 X 1 1/4 - GRADE #5 - STAINLESS STEEL
	000C12-04-12A	EA	BOLT - HEX - 1/4-20 X 3/4 - PLAIN 5
	000C12-05-16B	EA	BOLT - HEX - 5/16 - 18X1 - GRADE #5 - ZINC
	000C12-05-40B	EA	BOLT - HEX - 5/16"-18 X 2.5" - GRADE #5 - ZINC
	000C12-08-44B	EA	BOLT - HEX - 1/2-13 X 2 3/4 - GRADE #5 - ZINC
	000C12-08-24B	EA	BOLT - HEX - 1/2-13 X 1 1/2 - GRADE #5 - ZINC
	000C13-07-40B	EA	BOLT - HEX - 7/16-20 X 2 1/2 - GRADE #5 - ZINC
	000C13-07-72B	EA	BOLT-HEX,7/16-20X4.50,ZN,5 05 D29R
	000C13-07-48B	EA	BOLT - HEX - 7/16-20 X 3 - GRADE #5 - ZINC
	000C14-07-28B	EA	BOLT - HEX - 7/16-14 X 1 3/4 - GRADE #8 - ZINC
	000C18-05-40A	EA	BOLT - ELEVATOR - 5/16-18 X 2 1/2 - PL
	000C26-04-18B	EA	BOLT - HEX - SERRATED FLANGE - 1/4-20 X 1 1/8 - ZINC
	000C26-04-14B	EA	BOLT - HEX - SERRATED FLANGE - 1/4-20 X 7/8 - ZINC
	000C26-04-12F	EA	BOLT - HEX - SERRATED FLANGE -1/4-20 X 3/4-STAINLESS STEEL
	000C26-04-10B	EA	BOLT - HEX - SERRATED FLANGE - 1/4-20 X 5/8 - ZINC
	000C26-05-12B	EA	BOLT - HEX - SERRATED FLANGE - 5/16-18 X 3/4 - ZINC
	000C26-06-20B	EA	BOLT - HEX - SERRATED FLANGE - 3/8-16 X 1 1/4 - ZINC
	000C26-06-12B	EA	BOLT - HEX - SERRATED FLANGE - 3/8-16 X 3/4 - ZINC
	000C26-06-40B	EA	BOLT - HEX - SERRATED FLANGE - 3/8-16 X 2 1/2 - ZINC
	000C26-06-28B	EA	BOLT - HEX - SERRATED FLANGE - 3/8-16 X 1 3/4 - ZINC
	000C26-08-28B	EA	BOLT - HEX - SERRATED FLANGE - 1/2-13 X 1 3/4 - ZINC
	000C26-08-24B	EA	BOLT - HEX - SERRATED FLANGE - 1/2-13 X 1 1/2 - ZINC

COPYRIGHT © 2006 WINNEBAGO INDUSTRIES INC.

SEALANTS & FASTENERS GROUP (CONTINUED)

BOLTS, NUTS AND WASHERS (CONTINUED)

KEY	PART NUMBER	U/M	DESCRIPTION
	000C27-08-48B	EA	BOLT-CARR 1/2-13X3.00 GR5 - 97 M-SERIES
	000D24-10-00B	EA	NUT - HEX - SELF LOCKING - 10-32 - ZINC
	000D28-10-00B	EA	NUT - HEX - W/NYLON LOCK - 10-32 - ZINC
	000D29-04-00F	EA	NUT - HEX - SELF LOCKING - 1/4 X 20 - STAINLESS STEEL
	000D29-04-00B	EA	NUT - HEX - SELF LOCKING - 1/4 X 20 - ZINC
	000D29-06-00B	EA	NUT - HEX - W/NYLON LOCK - 3/8-16 - ZINC
	000D29-09-00B	EA	NUT - HEX - SELF LOCKING - 9/16-12 - ZINC
	000D34-04-00B	EA	NUT - HEX - LOCKING - 1/4-20 - ZINC
	000D34-06-00B	EA	NUT - HEX - LOCKING - 3/8-16 GRADE C - ZINC
	000D39-04-00B	EA	NUT - HEX - LOCKING W/SERRATED FLANGE - 1/4-20 - ZINC
	000D39-05-00B	EA	NUT - HEX - LOCKING W/SERRATED FLANGE - 5/16-18 - ZINC
	000D39-06-00B	EA	NUT - HEX - LOCKING W/SERRATED FLANGE - 3/8-18 - ZINC
	000D39-07-00B	EA	NUT - HEX - LOCKING W/SERRATED FLANGE - 7/16-14 - ZINC
	000D39-08-00B	EA	NUT - HEX - LOCKING W/SERRATED FLANGE - 1/2-13 - ZINC
	000D44-07-00B	EA	NUT - HEX - LOCKING W/SERRATED FLANGE - 7/16-20 - ZINC
	000D44-08-00B	EA	NUT - HEX - LOCKING W/SERRATED FLANGE - 1/2-20 - ZINC
	000D46-04-00A	EA	NUT - HEX - WELD - 1/4-20 - PLAIN
	000D65-08-00B	EA	NUT - HEX - LOCKING W/SERRATED FLANGE - 8-32 - ZINC
	000D73-08-00C	EA	NUT - HEX FLANGE - 1/2-13
	000D75-09-00B	EA	NUT - HEX LOCKING - 9/16-12 - ZINC
	000D76-06-00B	EA	NUT - HEX FLANGE - 3/8-16
	000E11-04-00F	EA	WASHER - LOCKING - 1/4 MED SPLIT - STAINLESS STEEL
	000E11-07-00B	EA	WASHER - LOCKING - 7/16 MED SPLIT - ZINC
	000E11-08-00B	EA	WASHER - LOCKING - 1/2 MED SPLIT - ZINC
	000E13-17-00B	EA	WASHER - FLAT - 3/8 AR - ZINC
	000E13-18-00B	EA	WASHER - FLAT - 3/8 WIDE - ZINC
	000E13-20-00B	EA	WASHER - FLAT - 7/16 WIDE - ZINC
	000E13-22-00B	EA	WASHER - FLAT - 1/2 WIDE - ZINC
	000E13-26-00B	EA	WASHER - FLAT - 5/8 WIDE - ZINC
	000E14-10-00B	EA	WASHER - LOCKING - #10 EXTERNAL TOOTH - ZINC
	000E16-10-00B	EA	WASHER - HARDENED - 5/8 - FLAT - ZINC
	005081-01-000	EA	NUT - SPEED - C-TYPE - #8 SCREW
	039715-01-000	EA	NUT-SERT - 1/4" DIAMETER - 20 THREADS
	040921-01-000	EA	NUT - SPEED - U TYPE - #10-24 - BLACK
	040921-03-000	EA	NUT - SPEED - U TYPE - #10
	040921-04-000	EA	NUT - SPEED - U TYPE - #8-.59" LENGTH X .44" WIDTH
	040921-05-000	EA	NUT - SPEED - U-TYPE - 8-.67" X .44" WIDE
	041322-01-000	EA	WASHER - FLANGE - 15/32"ID X 2 3/8"OD - F/SEAT BELT MTG
	044364-02-000	EA	NUT - SPEED - FLAT - ROUND
	044533-01-000	EA	WASHER - 1 3/8"OD - FOR BUTTONS - PLASTIC
	051387-06-000	EA	BOLT - CARRIAGE W/O HOLE - 5/16-18 X 9 1/2 - ZINC
	058716-02-000	EA	WASHER - FLAT NYLON
	064081-03-000	EA	NUT - WING 3/8-16 - W/WELD NUT
	077071-01-000	EA	WASHER - FENDER - 3/16"ID X 1"OD
	087234-01-000	EA	NUT - JACK - 1/4 X 20 THD - MOLLY
	088787-12-000	EA	STUD - WELD - 1/4 - 20 X 1.0 LG - MN
	102333-01-06A	EA	BOLT - CARRIAGE - 7/16-14 STAINLESS STEEL CAP
	102540-02-000	EA	SEAL - SCREW
	106956-03-000	EA	BOLT - HEX TAP - 1/2-13NC X 3 - GRADE 5 - FULL THREAD/ZINC
	106956-10-000	EA	BOLT - HEX TAP - 9/16-12NC X 3 5/8 -GRD 5-FULL THREAD/ZINC
	106956-11-000	EA	BOLT - HEX TAP - 1/2-13NC X 2 1/2 - GRD 5-FULL THREAD/ZINC
	107397-01-000	EA	WASHER - FENDER - 3/4"ID X 1"OD
	108067-03-000	EA	STUD - WELD - 1/4 - 20 X 1/2 CD
	109917-03-000	EA	WASHER - 1" X .50"
	109917-04-000	EA	WASHER - 1" X .75"
	128444-01-000	EA	WASHER - SPRING - CONICAL
	135092-02-01A	EA	BOLT - HEX - SERRATED FLANGE - 1/2-20 X 2 1/2-GRADE 5 ZINC
	135092-05-01A	EA	BOLT - HEX - SERRATED FLANGE - 1/2-20 X 1 - GRADE 5 ZINC
	143399-01-01A	EA	NUT/RETAINING - 3/8"- 24 NFT
	144904-01-01A	EA	BOLT - ADJUSTMENT - HEADLAMP
	147284-02-000	EA	NUT/SELF RETAINING - 5/16"-18
	148817-01-000	EA	WASHER/SPUR - LOCKING

COPYRIGHT © 2006 WINNEBAGO INDUSTRIES INC.

SEALANTS & FASTENERS GROUP (CONTINUED)

SCREWS

KEY	PART NUMBER	U/M	DESCRIPTION
	0G1208-12-170	EA	SCREW - 8-18 X 3/4 POH - BRIGHT WHITE
	0G3908-08-170	EA	SCREW - SF/DR - 8-18 X 1/2 PPH - BRIGHT WHITE
	0G3908-08-410	EA	SCREW - SF/DR - 8-18 X 1/2 PPH - PARCHMENT
	0G3908-12-250	EA	SCREW - SF/DR - 8-18 X 3/4 PPH - DARK GRAY
	0G3908-16-170	EA	SCREW - SF/DR - 8-18 X 1 PPH - BRIGHT WHITE
	0G3908-24-170	EA	SCREW - SF/DR - 8-18 X 1 1/2 PPH - BRIGHT WHITE
	0G3910-12-170	EA	SCREW - SF/DR - 10-16 X 3/4 PPH - BRIGHT WHITE
	0G3910-12-380	EA	SCREW - SF/DR - 10-16 X .75 PPH - CASHMERE
	0G3910-12-370	EA	SCREW - SF/DR - 10-16 X .75 PPH - RIVERSTONE
	0G3910-24-170	EA	SCREW - SF/DR - 10-16 X 1 1/2 PPH - BRIGHT WHITE
	0G3910-32-330	EA	SCREW - SF/DR - 10-16 X 2.00 PPH - PUTTY
	0G5508-08-380	EA	SCREW - SF/DR - 8-18 X .5 PWH - CASHMERE
	0G5508-08-370	EA	SCREW - SF/DR - 8-18 X .5 PWH - RIVERSTONE
	0G5508-12-320	EA	SCREW - SF/DR - 8-18 X 3/4 PWH - GLACIER
	0G5508-12-170	EA	SCREW - SF/DR - 8-18 X 3/4 PWH - BRIGHT WHITE
	0G5508-12-330	EA	SCREW - SF/DR - 8-18 X 3/4 PWH - PUTTY
	0G5508-16-370	EA	SCREW - SF/DR - 8-18 X 1 PWH - RIVERSTONE
	0G5508-16-330	EA	SCREW - SF/DR - 8-18 X 1 PWH - PUTTY
	0G5508-16-250	EA	SCREW - SF/DR - 8-18 X 1 PWH - VW DARK GRAY
	0G5508-16-380	EA	SCREW - SF/DR - 8-18 X 1 PWH - CASHMERE
	0G6008-16-170	EA	SCREW - SF/DR - 8-18 X 1 POH - BRIGHT WHITE
	0G6012-32-170	EA	SCREW - SF/DR - 12-14 X 2 POH - BRIGHT WHITE
	0G6710-08-170	EA	SCREW - 10-12 X 1/2 PPH - BRIGHT WHITE
	0G6710-12-170	EA	SCREW - 10-12 X 3/4 PPH - BRIGHT WHITE
	0G6806-16-170	EA	SCREW - 6-18 X 1 POH - BRIGHT WHITE
	0G6810-24-280	EA	SCREW - 10-12 X 1 1/2 POH - SOFT WHITE
	000C20-06-24T	EA	SCREW - 3/8-16 X 1 1/2 - FLAT SOCKET
	000C28-05-24D	EA	CAPSCREW/BUTTON HEAD - 5/16-18 X 1 1/2 - #8-BLK PHOSPHATE
	000G11-06-08B	EA	SCREW - 6-20 X 1/2 PPH - ZINC
	000G11-06-10B	EA	SCREW - 6-20 X 5/8 PPH - ZINC
	000G11-06-10J	EA	SCREW - 6-20 X 5/8 PPH - BRASS
	000G11-07-08B	EA	SCREW - 7-19 X 1/2 PPH - ZINC
	000G11-08-12B	EA	SCREW - 8-18 X 3/4 PPH - ZINC
	000G11-08-06B	EA	SCREW - 8-18 X 3/8 PPH - ZINC
	000G11-08-08T	EA	SCREW - 8-18 X 1/2 PPH - FLUOROCARBON COATING
	000G11-08-12B	EA	SCREW - 8-18 X 3/4 PPH - ZINC
	000G11-08-12P	EA	SCREW - 8-18 X 3/4 PPH - DARK BROWN
	000G11-08-12S	EA	SCREW - 8-18 X 3/4 PPH - OFF WHITE
	000G11-08-12T	EA	SCREW - 8-18 X 3/4 PPH - BLACK MAGNESIUM
	000G11-08-20B	EA	SCREW - 8-18 X 1 1/4 PPH - ZINC
	000G11-08-20G	EA	SCREW - 8-18 X 1 1/4 - ANTIQUE BRASS
	000G11-10-12D	EA	SCREW - 10-16 X 3/4 PPH - BLACK
	000G12-06-12J	EA	SCREW - 6-20 X .75 POH - BRASS
	000G12-06-08T	EA	SCREW - 6-20 X 1/2 POH - BLACK
	000G12-10-16F	EA	SCREW - 10-16 X 1 POH - STAINLESS STEEL
	000G13-05-10B	EA	SCREW - 5-12 X 5/8 PFH - ZINC
	000G13-06-08B	EA	SCREW - 6-20 X 1/2 PFH - ZINC
	000G13-06-08G	EA	SCREW - 6-20 X 1/2 PFH - ANTIQUE BRASS
	000G13-06-10B	EA	SCREW - 6-20 X 5/8 PFH - ZINC
	000G13-06-10G	EA	SCREW - 6-20 X 5/8 PFH - ANTIQUE BRASS
	000G13-06-16J	EA	SCREW - 6-20 X 1 PFH - BRASS
	000G13-06-169	EA	SCREW - SF/DR - 6-20 X 1 PFH - SILVER
	000G13-06-24J	EA	SCREW - 6-20 X 1 1/2 PFH - BRASS
	000G13-07-10H	EA	SCREW - 7-19 X 5/8 PFH - BLACK
	000G13-07-12B	EA	SCREW - 7-19 X 3/4 PFH - ZINC
	000G13-08-16B	EA	SCREW - 8-18 X 1 PFH - ZINC
	000G13-08-109	EA	SCREW - 8-18 X 5/8 PFH
	000G13-08-10B	EA	SCREW - 8-18 X 5/8 PFH - ZINC
	000G13-08-24B	EA	SCREW - 8-18 X 1 1/2 PFH - ZINC
	000G16-04-24B	EA	SCREW - MACHINE - 1/4-20 X 1 1/2 PPH
	000G18-08-12B	EA	SCREW - MACHINE - 8-32 X 3/4 PPH - ZINC
	000G18-08-16B	EA	SCREW - MACHINE - 8-32 X 1 PPH - ZINC
	000G18-08-22B	EA	SCREW - MACHINE - 8-32 X 1 3/8 PPH - ZINC
	000G18-08-24B	EA	SCREW - MACHINE - 8-32 X 1 1/2 PPH - ZINC

COPYRIGHT © 2006 WINNEBAGO INDUSTRIES INC.

SEALANTS & FASTENERS GROUP (CONTINUED)

SCREWS (CONTINUED)

KEY	PART NUMBER	U/M	DESCRIPTION
	000G19-10-10B	EA	SCREW - MACHINE - 10-32 X 5/8 - PPH - ZINC
	000G19-10-08B	EA	SCREW - MACHINE - 10-32 X 1/2 PPH - ZINC
	000G19-10-20B	EA	SCREW - MACHINE - 10-32 X 1 1/2 PPH - ZINC
	000G19-10-12F	EA	SCREW - MACHINE - 10-32 X 3/4 PPH - STAINLESS STEEL
	000G36-10-12T	EA	SCREW - 10-24X 3/4 PFH TYPE 23 - BLACK
	000G39-06-10T	EA	SCREW - SF/DR - 6-20 X 5/8 PPH - BLACK
	000G39-06-16T	EA	SCREW - SF/DR - 6-20 X 1 PPH - BLACK
	000G39-08-06B	EA	SCREW - SF/DR - 8-18 X 3/8 PPH - ZINC
	000G39-08-08B	EA	SCREW - SF/DR - 8-18 X 1/2 PPH - ZINC
	000G39-08-08S	EA	SCREW - SF/DR - 8-18 X 1/2 PPH - OFF WHITE
	000G39-08-08T	EA	SCREW - SF/DR - 8-18 X 1/2 PPH - BLACK
	000G39-08-12T	EA	SCREW - SF/DR - 8-18 X 3/4 PPH - BLACK
	000G39-08-16B	EA	SCREW - SF/DR - 8-18 X 1 PPH - ZINC
	000G39-08-16S	EA	SCREW - SF/DR - 8-18 X 1 PPH - OFF WHITE
	000G39-08-16T	EA	SCREW - SF/DR - 8-18 X 1 PPH - BLACK
	000G39-08-24B	EA	SCREW - SF/DR - 8-18 X 1 1/2 PPH - ZINC
	000G39-08-24S	EA	SCREW - SF/DR - 8-18 X 1 1/2 - OFF WHITE
	000G39-08-24T	EA	SCREW - SF/DR - 8-18 X 1 1/2 PPH - BLACK
	000G39-08-32B	EA	SCREW - SF/DR - 8-18 X 2 PPH - ZINC
	000G39-10-10B	EA	SCREW - SF/DR - 10-16 X 5/8 PPH - ZINC
	000G39-10-12B	EA	SCREW - SF/DR - 10-16 X 3/4 PPH - ZINC
	000G39-10-08B	EA	SCREW - SF/DR - 10-16 X 1/2 PPH - ZINC
	000G39-10-48T	EA	SCREW - SF/DR - 10-16 X 3 PPH - BLACK
	000G39-10-48B	EA	SCREW - SF/DR - 10-16 X 3 - PPH - ZINC
	000G39-10-129	EA	SCREW - SF/DR - 10-16 X 3/4 PPH - FLUOROCARBON SILVER
	000G39-10-169	EA	SCREW - SF/DR - 10-16 X 1 PPH - FLU0R0CARBON SILVER
	000G39-10-32B	EA	SCREW - SF/DR - 10-16 X 2 - PPH - ZINC
	000G39-10-28T	EA	SCREW - SF/DR - 10-16 X 1 3/4" PPH - BLACK
	000G39-10-24T	EA	SCREW - SF/DR - 10-16 X 1 1/2" PPH - BLACK
	000G39-10-20T	EA	SCREW - SF/DR - 10-16 X 1 1/4 PPH - BLACK
	000G39-10-20B	EA	SCREW - SF/DR - 10-16 X 1 1/4 PPH - ZINC
	000G42-04-24B	EA	SCREW - SF/DR - 1/4-14 X 1 1/2 - ZINC
	000G42-04-16B	EA	SCREW - SF/DR - 1/4-14 X 1 HWH - ZINC
	000G52-06-05B	EA	SCREW - MACHINE - 6-32 X 5/16 PTH - ZINC
	000G52-06-06B	EA	SCREW - MACHINE - 6-32 X 3/8 PTH - ZINC
	000G54-04-14B	EA	SCREW - 1/4-20 X 7/8 PTH - TYPE 23 - ZINC PLATED
	000G55-08-16T	EA	SCREW - SF/DR - 8-18 X 1 PWH - BLACK
	000G55-08-124	EA	SCREW - SF/DR - 8-18 X 3/4 PWH - ASH GRAY
	000G56-12-48B	EA	SCREW - WOOD - 12-11 X 3 POH - SPECIAL HARDENED
	000G60-08-22B	EA	SCREW - SF/DR - 8-18 X 1.38 POH - ZINC
	000G60-08-20F	EA	SCREW - SF/DR - 8-19X1.25 POH
	000G60-08-16E	EA	SCREW - SF/DR - 8-1 X 1 POH - CHROME
	000G60-10-16J	EA	SCREW - SF/DR - 10-16 X 1 POH - BRIGHT BRASS
	000G60-10-28T	EA	SCREW - SF/DR - 10-16 X 1 3/4 - BLACK
	000G60-10-209	EA	SCREW - SF/DR - 10-16 X 1 1/4 POH - SILVER STALGAARD
	000G60-10-20B	EA	SCREW - SF/DR - 10-16 X 1 1/4 POH - ZINC
	000G62-06-249	EA	SCREW - SF/DR - 8-18 X 1.5 PPH - SILVER
	000G62-08-24B	EA	SCREW - SF/DR - 8-18 X 1 1/2 PFH
	000G67-08-32B	EA	SCREW - 8-15 X 2 PPH - ZINC
	000G67-10-08B	EA	SCREW - 10-12 X 1/2 PPH - ZINC
	000G67-10-08S	EA	SCREW - 10-12 X 1/2 PPH - OFF WHITE
	000G67-10-10B	EA	SCREW - 10-12 X 5/8 PPH - ZINC - TYPE A
	000G67-10-10P	EA	SCREW - 10-12 X 5/8 PPH - DARK BROWN
	000G67-10-10S	EA	SCREW - 10-12 X 5/8 PPH - OFF WHITE
	000G67-10-10T	EA	SCREW - 10-12 X 5/8 PPH - BLACK
	000G67-10-12P	EA	SCREW - 10-12 X 3/4 PPH - DARK BROWN
	000G67-10-24B	EA	SCREW - 10-12 X 1 1/2 PPH - ZINC
	000G67-10-24S	EA	SCREW - 10-12 X 1 1/2 PPH - OFF WHITE
	000G67-10-32J	EA	SCREW-10-12X2 PPH - BRIGHT BRASS
	000G68-06-10J	EA	SCREW - 6-18 X 5/8 POH - BRASS
	000G68-06-12S	EA	SCREW - 6-18 X 3/4 POH
	000G68-06-12J	EA	SCREW - 6-18 X 3/4 POH - BRASS
	000G68-06-12B	EA	SCREW - 6-18 X 3/4 POH - ZINC & CLEAR
	029130-01-000	EA	SCREW - SNAP STUD - #8-16 X 5/8" LONG

COPYRIGHT © 2006 WINNEBAGO INDUSTRIES INC.

SEALANTS & FASTENERS GROUP (CONTINUED)

SCREWS (CONTINUED)

KEY	PART NUMBER	U/M	DESCRIPTION
	029130-03-000	EA	SCREW - SNAP STUD - #8-16 X 1" LONG
	049465-01-000	EA	SCREW - 10-16 PTH W/WASHER - DARK BROWN
	049465-03-000	EA	SCREW - 10-16 X 1 POH W/WASHER - OFF WHITE
	049465-13-000	EA	SCREW-10+16X1 PTH W/WASHER - *ASH GRAY
	049465-17-000	EA	SCREW - 10-16 X 1 POH W/WASHER - BRIGHT WHITE
	049465-22-000	EA	SCREW - 10-16 X 1 1/2 POH W/WASHER - SABLE
	054434-02-000	EA	SCREW - SF/DR - 10-16 X 2 - ZINC
	054434-03-000	EA	SCREW - SF/DR - 10-16 X 2 - PWH - ZINC
	075908-01-000	EA	SCREW - MACHINE - 10-32 X .56 PTH - EXTERNAL TOOTH - ZINC
	076790-01-000	EA	SCREW - 6-20 X 1 1/4 PPH - BLACK
	076790-05-000	EA	SCREW - 6-20 X 1/2 PPH - BLACK - THREAD CUTTING/WOOD
	083554-01-000	EA	SCREW - DRYWALL - 8 X 1 1/4
	083554-04-000	EA	SCREW - DRYWALL - 8 X 2 1/2
	087721-01-000	EA	SCREW - FLAT HEAD - TAPPING - 1/4" X 1 1/4" LONG - ZINC
	097974-01-000	EA	SCREW - PARTICLE BOARD - 7-9 X 3/4 PPH
	097974-02-000	EA	SCREW-PART BD 8-9X.75 PFH - BEIGE
	101618-01-000	EA	SCREW - 1/4-20 X 3/4 HEX - TAPPING - STALGARD TYPE F
	113563-01-01A	EA	SCREW - 8 X 5/8 LONG SHOULDER/WASHER HEAD
	118383-01-04A	EA	RETAINER/RECESSED - F/.22" SCREW - BRIGHT WHITE
	118383-01-09A	EA	RETAINER/RECESSED - F/.22" SCREW - GLACIER
	118383-01-12A	EA	RETAINER/RECESSED - F/.22" SCREW - RIVERSTONE
	118383-01-11A	EA	RETAINER/RECESSED - F/.22" SCREW - CASHMERE
	118383-01-10A	EA	RETAINER/RECESSED - F/.22" SCREW - STORM GRAY
	118383-02-10A	EA	RETAINER/RECESSED - F/.27" SCREW - RIVERSTONE
	118383-02-13A	EA	RETAINER/RECESSED - F/.27" SCREW - OFF WHITE
	118383-02-11A	EA	RETAINER/RECESSED - F/.27" SCREW - CASHMERE
	118383-03-09A	EA	RETAINER/RECESSED - F/.32" SCREW - GLACIER
	118383-04-04A	EA	CAP - F/RECESSED RETAINER - BRIGHT WHITE
	118383-04-12A	EA	CAP - F/RECESSED RETAINER - STORM GRAY
	118383-04-11A	EA	CAP - F/RECESSED RETAINER - CASHMERE
	118383-04-10A	EA	CAP - F/RECESSED RETAINER - RIVERSTONE
	118383-04-09A	EA	CAP - F/RECESSED RETAINER - GLACIER
	118383-04-13A	EA	CAP - F/RECESSED RETAINER - OFF WHITE
	134126-01-01A	EA	SCREW/NAIL - HEX HEAD - 3/4"
	140040-01-000	EA	SCREW - 1/4-20 X 1 - BUTTON HEAD/SOCKET - W/LOCTITE
	149753-01-02A	EA	RETAINER/RECESSED - F/.22" SCREW - BRIGHT WHITE
	149753-01-02A	EA	RETAINER/RECESSED - F/.22" SCREW - BRIGHT WHITE
	149753-01-01A	EA	RETAINER/RECESSED - F/.22" SCREW - BLACK
	149753-02-02A	EA	CAP - F/RECESSED RETAINER - BRIGHT WHITE
	149753-02-01A	EA	CAP - F/RECESSED RETAINER - BLACK
	154938-01-02A	EA	SCREW - SF/DR - 10-16 X 3/4 PPH - W/SELF SEAL - BLACK
	154938-01-01A	EA	SCREW - SF/DR - 10-16 X 3/4 PPH - W/SELF SEAL-BRIGHT WHITE
	154938-02-03A	EA	SCREW - SF/DR - 8-18 X 1 PFH - W/SELF SEAL - SILVER
	154938-02-01A	EA	SCREW - SF/DR - 8-18 X 1 PFH - W/SELF SEAL - BRIGHT WHITE

CLAMPS, CLIPS, GROMMETS, RIVETS & PLUGS

KEY	PART NUMBER	U/M	DESCRIPTION
	000H14-06-06R	EA	RIVET-MANDREL BLIND,3/16 AL - CHERRY BSP-66
	000H16-04-06R	EA	RIVET - POP ALUMINUM - 1/8 X .313 - .375
	000H16-06-10R	EA	RIVET - POP ALUMINUM - 3/16 X .501 - .625
	007161-01-000	EA	CLAMP - HOSE - SPRING TYPE - 1/2"
	008386-01-000	EA	GROMMET - SNAP - 3/8" DIAMETER - NYLON
	010495-01-000	EA	CLAMP - CABLE - 9/16"ID - BLACK
	010495-02-000	EA	CLAMP - CABLE - 3/8"ID - BLACK
	010495-04-000	EA	CLAMP - CABLE - 11/16"ID - WHITE
	010497-01-000	EA	CLAMP - CLOSED - 5/8"ID
	010497-02-000	EA	CLAMP - CLOSED - 1.5"ID
	010497-03-000	EA	CLAMP - CLOSED - 1"ID - CUSHIONED
	010497-04-000	EA	CLAMP - CLOSED - 1 5/8"ID
	010497-05-000	EA	CLAMP - CLOSED - 1/2"ID
	010497-07-000	EA	CLAMP - CLOSED - 3/8"ID
	010497-10-000	EA	CLAMP - CLOSED - 7/8"ID
	010499-01-000	EA	CLAMP - CLOSED - 3/8"ID
	016188-03-000	EA	GROMMET - LP LINE - 3/8"HOLE X 2 1/2"LONG - RUBBER

COPYRIGHT © 2006 WINNEBAGO INDUSTRIES INC.

SEALANTS & FASTENERS GROUP (CONTINUED)

CLAMPS, CLIPS, GROMMETS, RIVETS & PLUGS (CONTINUED)

KEY	PART NUMBER	U/M	DESCRIPTION
	016188-04-000	EA	GROMMET - LP LINE - 1/2"HOLE X 2 1/2"LONG - RUBBER
	016188-05-000	EA	GROMMET - LP LINE - 3/8"HOLE X 1 1/4"LONG - RUBBER
	016188-06-000	EA	GROMMET - LP LINE - 3/8"HOLE X 3 1/4"LONG - RUBBER
	016188-07-000	EA	GROMMET - L/P LINE - 1/2"HOLE X 3 1/4"LONG
	016188-08-000	EA	GROMMET - LP LINE - 1/2"HOLE X 1 1/4"LONG - RUBBER
	016188-09-000	EA	GROMMET - LP LINE - .68"HOLE X 1 1/4"LONG - RUBBER
	016188-10-000	EA	GROMMET - LP GAS - .68" X 2.5"
	023942-01-000	EA	GROMMET - RUBBER - 2"OD
	061420-04-000	EA	PLUG/PLASTIC - 1 1/4" DIAMETER
	061420-05-000	EA	PLUG/PLASTIC - 1 1/2" DIAMETER
	061420-09-000	EA	PLUG/PLASTIC - 1.00" DIAMETER
	061420-12-000	EA	PLUG/PLASTIC - 1.50" DIAMETER - RED
	061420-13-000	EA	PLUG/PLASTIC - 3/8" - FLUSH
	061420-14-000	EA	PLUG/PLASTIC - 7/8" DIAMETER - BLACK
	061420-15-000	EA	PLUG/PLASTIC - 2" DIAMETER - BLACK
	061420-16-000	EA	PLUG/PLASTIC - 2 1/8" DIAMETER - BLACK
	062401-01-000	EA	CLAMP - HOSE - WORMGEAR - .25" - 1"
	062401-02-000	EA	CLAMP - HOSE - WORMGEAR - 1.56" - 2.5" ID
	062401-03-000	EA	CLAMP - HOSE - WORMGEAR - .22" - 1" ID
	062401-04-000	EA	CLAMP - HOSE - WORMGEAR - .69" - 1.25" ID
	062401-05-000	EA	CLAMP - HOSE - WORMGEAR - 2" - 3" ID
	062401-06-000	EA	CLAMP - HOSE - WORMGEAR - .22" - .62" ID
	062401-09-000	EA	CLAMP - HOSE - WORMGEAR - 2.8" - 3.75" ID
	062401-11-000	EA	CLAMP - HOSE - WORMGEAR - 3.50" - 4.50" ID
	062401-13-000	EA	CLAMP - HOSE - WORMGEAR
	071015-01-000	EA	GROMMET - RUBBER - .5"ID X 1"OD-W/.38" GROOVE - BLACK
	071015-22-000	EA	GROMMET - RUBBER - .62"ID X 1.12"OD W/.19" GROOVE - BLACK
	071015-26-000	EA	GROMMET - RUBBER - 1.5"ID X 2.1"OD W/.06" GROOVE - BLACK
	071015-29-000	EA	GROMMET - RUBBER - .3"ID X 1.3"OD W/.12" GROOVE - BLACK
	071015-30-000	EA	GROMMET - RUBBER - .3"ID X .81"OD W/.12" GROOVE - BLACK
	071015-37-000	EA	GROMMET - .81 ID FITS .56 MTL
	071015-39-000	EA	GROMMET - .75 ID FITS .06 MTL
	071015-41-000	EA	GROMMET - .125 ID FITS .188 MTL
	071015-42-000	EA	GROMMET - .25 ID FITS .06 MTL
	075148-02-000	EA	CLAMP - GROUNDING - BRONZE SCREWS
	077955-01-000	EA	CLIP/J - 3/8" - VINYL COATED
	080734-02-000	EA	CLIP - WIRE NYLON
	081211-01-000	EA	PLUG - PLASTIC - .31"DIA - BLACK
	081211-03-000	EA	PLUG - PLASTIC - .50"DIAMETER - TRUSS HEAD - BLACK
	081211-04-000	EA	PLUG - PLASTIC - .46"DIAMETER - TRUSS HEAD - BLACK
	083609-01-000	EA	CLAMP - WIRE - DUAL - EQUAL DIAMETERS - 5/8"
	083610-01-000	EA	CLAMP - WIRE - DUAL - UNEQUAL DIAMETERS - 3/4" & 1 1/4"
	083610-02-000	EA	CLAMP - WIRE - DUAL - UNEQUAL DIAMETERS - 3/4" & 2"
	083610-03-000	EA	CLAMP - WIRE - DUAL - EQUAL DIAMETERS - 2"
	088756-01-000	EA	GROMMET - WEB - 1 1/8"ID
	089329-02-000	EA	CLIP - SPRING
	091952-01-000	EA	CLIP - GRIPPER - 1" - BLACK VINYL COATED
	091952-02-000	EA	CLIP - GRIPPER - 3/4" - BLACK VINYL COATED
	091952-03-000	EA	CLIP - GRIPPER - 1/2" - BLACK VINYL COATED
	094362-02-000	EA	CLIP - XMAS TREE - BINDER HEAD - .9" LONG/ANY COLOR
	094362-05-000	EA	CLIP - XMAS TREE - ROUND HEAD - 1.4" LONG/ANY COLOR
	113133-02-01A	EA	RIVET - POP - ALUMINUM - 3/16 X .252 - .504 - BLACK
	114208-03-000	EA	GROMMET - EDGE LINER - FITS 2 1/2"
	114208-05-000	EA	GROMMET - EDGE LINER - FITS 2"
	118626-01-02A	EA	RIVET/POP - ALUMINUM - 3/16 X .08 - .375
	118626-01-01A	EA	RIVET/POP - ALUMINUM - 3/16 X 1.2"(GRIP RANGE .1"-.4")
	118626-02-01A	EA	RIVET/POP - ALUMINUM - 3/16 X .500 - .750
	118626-03-01A	EA	RIVET/POP - STAINLESS STEEL - 3/16 X .500 - .750
	137014-01-02A	EA	GROMMET - CABLE - BROWN
	137014-01-01A	EA	GROMMET - CABLE - ALMOND
	137014-01-03A	EA	GROMMET - CABLE - BLACK
	139118-02-01A	EA	GROMMET - SCREW - PLASTIC
	155498-01-01A	EA	CLAMP - CLOSED - 7/8"ID - VINYL DIP/GALVONIZED - BLACK

COPYRIGHT © 2006 WINNEBAGO INDUSTRIES INC.

SEALANTS & FASTENERS GROUP (CONTINUED)

MISCELLANEOUS FASTENERS

KEY	PART NUMBER	U/M	DESCRIPTION
	008343-01-000	EA	TIE - WIRE - 6"
	008343-02-000	EA	TIE - WIRE - 14"
	008343-03-000	EA	TIE - WIRE - 7 1/2" - BLACK
	029094-04-000	YD	VELCRO TAPE/LOOP - 1"WIDE - W/ADHESIVE BACK - BLACK
	029096-03-000	YD	VELCRO TAPE/HOOK - 1"WIDE - BLACK
	029096-04-000	YD	VELCRO TAPE/HOOK - 1"WIDE - BLACK - W/ADHESIVE BACK (PSA)
	048394-02-000	YD	VELCRO TAPE - HOOK - ADHESIVE BACK - 3/4" WIDE - BEIGE
	085774-01-000	FT	FASTENER - DUAL LOCK - 1" WIDE - ADHESIVE BACK - BLACK
	085774-02-000	FT	FASTENER - DUAL HOOK - 1" WIDE - ADHESIVE BACK - BLACK
	088792-02-000	YD	VELCRO TAPE - LOOP - 3/4" - ADHESIVE BACK - BEIGE
	088792-04-000	YD	VELCRO TAPE - HOOK - 5/8" - NON-ADHESIVE BACK - WHITE
	088792-05-000	YD	VELCRO TAPE - LOOP - 5/8" - NON-ADHESIVE BACK - WHITE
	108046-01-000	EA	CABLE TIE - SCREW MOUNT 8"
	108046-02-000	EA	CABLE TIE - SCREW MOUNT 15"
	110943-01-000	FT	FELT STRIP - 3/8" - ADHESIVE BACK - BLACK - 75' PER ROLL
	110943-02-000	FT	FELT STRIP - 3/8" - ADHESIVE BACK - WHITE
	143059-03-02A	EA	PAD/FELT - 1/4” THICK - ADHESIVE BACK - WHITE

COPYRIGHT © 2006 WINNEBAGO INDUSTRIES INC.

WATER & SEWAGE GROUP

DRAINAGE SYSTEM

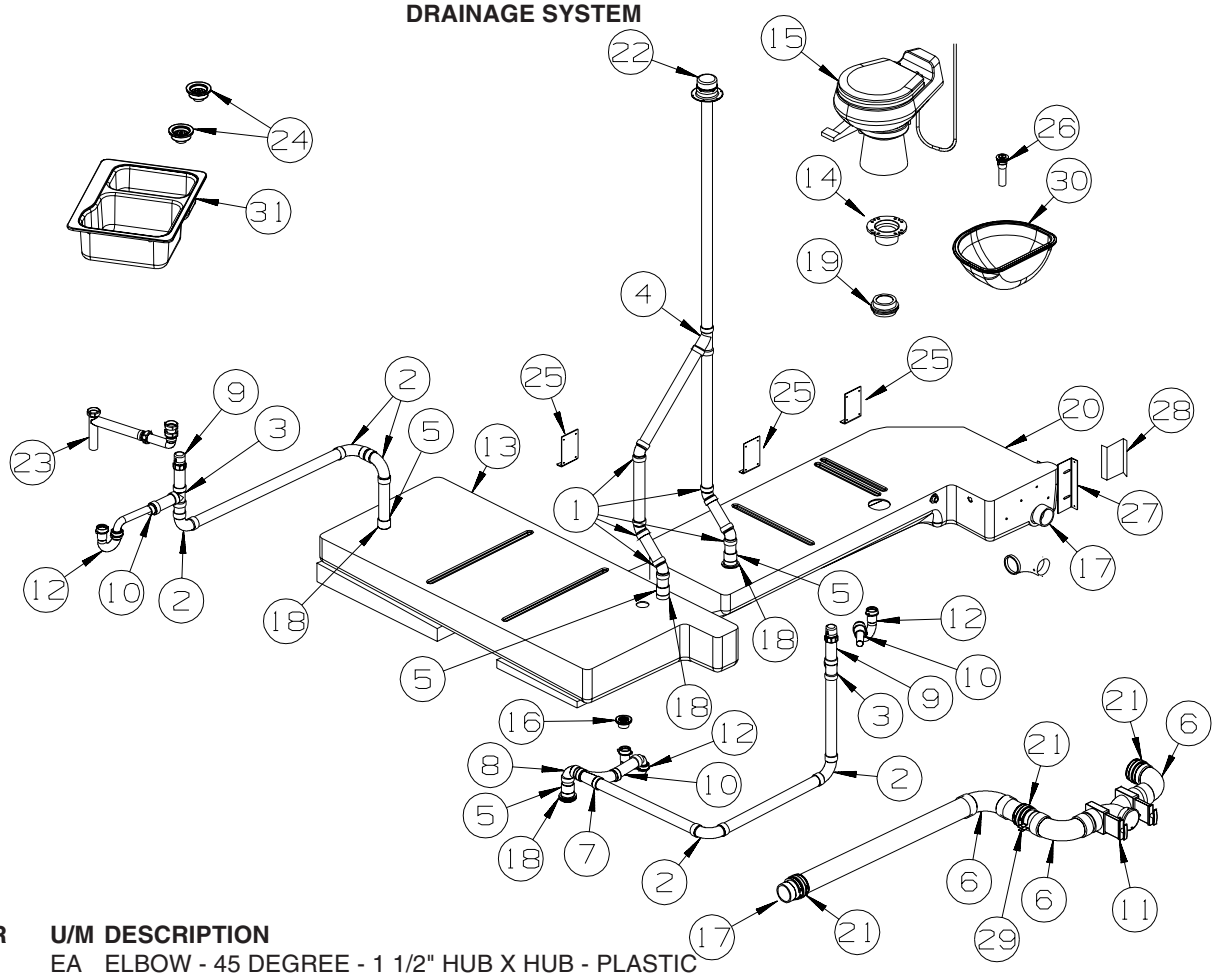

KEY	PART NUMBER	U/M	DESCRIPTION
1	010006-01-000	EA	ELBOW - 45 DEGREE - 1 1/2" HUB X HUB - PLASTIC
2	010008-01-000	EA	ELBOW - 90 DEGREE - 1 1/2" HUB X HUB - PLASTIC
3	010071-01-000	EA	TEE - SANITARY - 1 1/2" HUB X HUB X HUB - PLASTIC
4	010073-01-000	EA	WYE - 45 DEGREE - 1 1/2" HUB X HUB X HUB - PLASTIC
5	010115-01-000	EA	COUPLING - 1 1/2" HUB X HUB - PLASTIC
6	031126-01-000	EA	ELBOW - 1/4 BEND - 3" X 90" XLT - BLACK PLASTIC
7	031365-02-000	EA	TEE - PLASTIC - 1 1/2" EXTRA LONG TURN
8	034250-01-000	EA	ELBOW - 90 DEGREE - LONG TURN - 1 1/2" HUB X HUB - ABS
9	079968-01-000	EA	VENT - MECHANICAL/TRAP ARM - ANTI-SIPHON-2" X 7.3" PLASTIC
10	152146-01-000	EA	CONNECTOR - 1 1/2"P X 1 1/2"MPT
11	136143-01-000	EA	VALVE - DUAL - 3" X 3"
	139513-01-000	EA	HOSE - SEWER - 3" X 10' - W/ADAPTER
	062416-01-000	EA	ADAPTER - SEWER HOSE TO 3" PIPE
	144728-01-000	EA	VALVE - SEWER HOSE - 3"
*	062415-01-000	EA	CAP - SEWER - 3" DIAMETER
	062416-01-000	EA	ADAPTER - SEWER HOSE TO 3" PIPE
	147845-01-01A	EA	LABEL - DRIP VALVE
12	107538-02-000	EA	P-TRAP - PLASTIC - 1 1/2" W/EXTENSION ARM
9	011071-01-000	EA	P-TRAP - 1 1/2" - CSA - PLASTIC - CANADIAN
13	132448-01-700	EA	TANK - HOLDING - 49 GALLON - W/3" NIPPLE - W/O FITTINGS
14	116644-01-000	EA	FLANGE/CLOSET - 3" FEMALE - 4 BOLT
15*	152830-01-01A	EA	TOILET/AQUA MAGIC STYLE PLUS - 20"TALL - W/O SPRAY - WHITE
16	066440-01-000	EA	STRAINER - SHOWER DRAIN - W/RUBBER WASHER
	127440-02-01A	EA	WASHER - RUBBER - 1.8" X .1"
	011069-06-000	EA	TAILPIECE - 1 1/2" X 1 1/4" X 2 1/2"
	130403-01-000	EA	NUT - SLIP - W/WINGS 1 1/2"
17	010129-03-000	EA	NIPPLE - 3" X 3" TOE - PLASTIC
18	061607-01-000	EA	GROMMET - HOLDING TANK - 1 1/2" NPS
19	061607-02-000	EA	GROMMET - HOLDING TANK - 3" NPS
20	123055-01-700	EA	TANK - HOLDING - 40 GALLON - W/3" OUTLET NIPPLE - BLACK
	125697-02-000	EA	NOZZLE - WELD-A-FLUSH
	114430-03-000	EA	ADAPTER - 1/2"P X 1/2"MPT
21	078406-01-000	EA	COUPLER - 3" X 3" W/CLAMPS - RUBBER

COPYRIGHT © 2006 WINNEBAGO INDUSTRIES INC.

WATER & SEWAGE GROUP (CONTINUED)

DRAINAGE SYSTEM (CONTINUED)

KEY	PART NUMBER	U/M	DESCRIPTION
22	083558-03-000	EA	VENT W/COVER F/PLUMBING STACK - OFF WHITE
23	011091-02-000	EA	WASTE - CONTINUOUS
24	092303-01-000	EA	STRAINER - W/BASKET - GALLEY SINK - 4" OD
25	094756-02-01A	EA	BRACKET - L - 6.1" LONG X 3.9" WIDE - STEEL
26	147930-01-000	EA	WASHER/SEAL - FOAM - 1.4"ID X 2.1"OD - F/POP-UP DRAIN
27	123282-03-02B	EA	BRACKET - WATER TANK - E-COATED
28	123283-03-02B	EA	BRACKET - WATER TANK - E-COATED
29	141443-01-02B	EA	HOLDER - RING - E-COATED
30	155318-01-01A	EA	SINK - LAVATORY - OVAL - 19.5" X 16.5" - CREAM
31	148870-01-01A	EA	SINK/DOUBLE - LRG/SML BASIN - 25" X 19" X 7"

***COMPONENT PARTS LISTED LATER IN THIS GROUP**

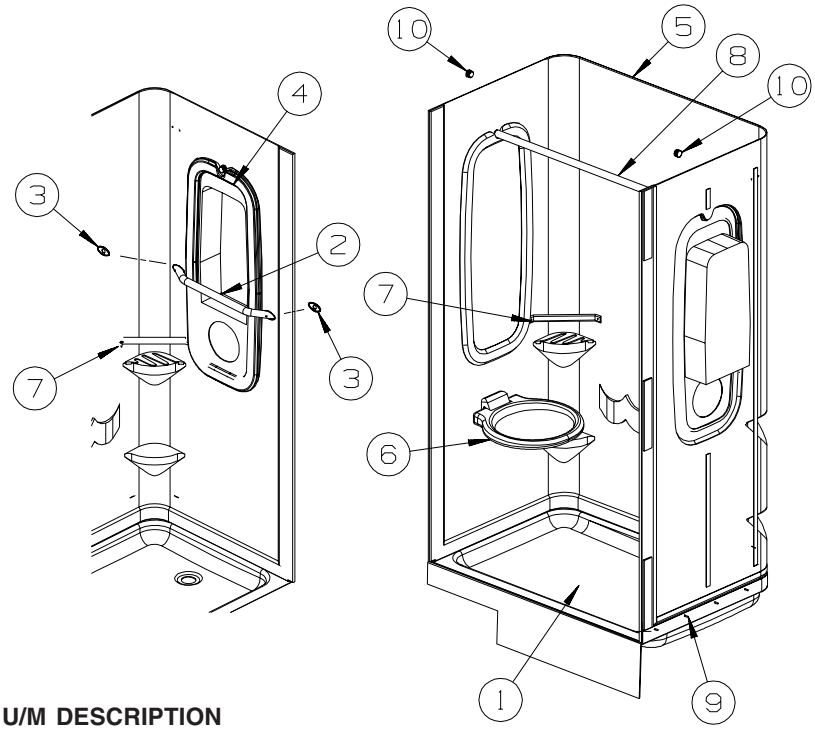

KEY	PART NUMBER	U/M	DESCRIPTION
1	M02630-79-R38	EA	SHOWER PAN - W/STRAINER - SOFT WHITE
2	132083-01-02A	EA	HANDRAIL/ASSIST - 1" DIAMETER/W/END CAPS - SOFT WHITE
3	132083-02-01A	EA	PAD - OVAL - BLACK RUBBER
4	132192-01-01A	EA	CADDY - SHOWER - SOFT WHITE
5	147188-02-01A	EA	SURROUND - SHOWER - SOFT WHITE
6	135607-03-01A	EA	SEAT - SHOWER/FOLDING-WHT(REPLACEMENT OR OPTION INST ONLY)
7	NOT USED		
8	102075-18-02A	EA	ROD - SHOWER CURTAIN - 1" OD X 38.9" - SOFT WHITE
9	154585-03-01A	FT	SEAL - FOAM TAPE - ADHESIVE 2 SIDED - 1/8" X 3/4" - BLACK
10	081114-02-000	EA	CAP - INSERT/ROUND - 1" DIAMETER - WHITE PLASTIC

COPYRIGHT © 2006 WINNEBAGO INDUSTRIES INC.

WATER & SEWAGE GROUP (CONTINUED)

COMPONENT PARTS FOR DRAINAGE SYSTEM

062415-01-000

KEY	PART NUMBER	U/M	DESCRIPTION	VENDOR NO.
	062415-01-700	EA	STRING-SEWER CAP	V#SV7 STRAP

144728-01-000

KEY	PART NUMBER	U/M	DESCRIPTION	VENDOR NO.
	144728-01-700	EA	GASKET-RUBBER	9667310-10

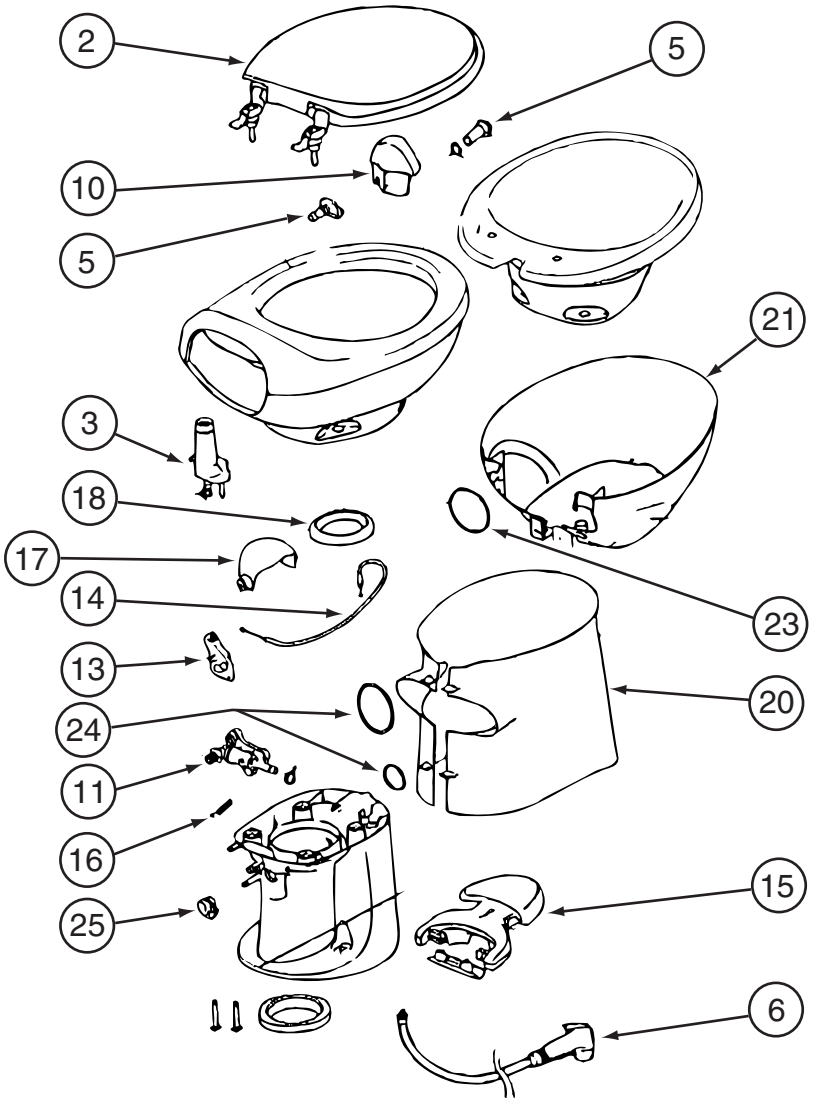

152830-01-01A

KEY	PART NUMBER	U/M	DESCRIPTION	VENDOR NO.
2	152829-01-700	EA	SEAT/COVER ASSEMBLY - WHITE	34144
3	152829-01-708	EA	VACUUM BREAKER	34122
5	152830-01-701	EA	FLUSH NOZZLE - WHITE	34127
11	152829-01-701	EA	WATER VALVE	34100
13	152829-01-703	EA	WATER VALVE DRIVE ARM	34104
14	152829-01-704	EA	CABLE - F/PEDAL	34106
15	152830-01-700	EA	PEDAL PACKAGE - WHITE	34114
16	152829-01-705	EA	SPRING/RETURN-F/WATER VALVE	34110
17	152829-01-706	EA	WASTE BALL - WHITE	34117
18	152829-01-707	EA	SEAL - F/WASTE BALL	34120
20	152830-01-703	EA	SHROUD - TALL/WHITE	34138
24	152830-01-702	EA	O-RING PKG - F/SHROUD	34136
25	152829-01-702	EA	WASTE BALL DRIVE ARM	34102

CONTACT WINNEBAGO PART SALES FOR UNLISTED COMPONENT(S)

COPYRIGHT © 2006 WINNEBAGO INDUSTRIES INC.

WATER & SEWAGE GROUP (CONTINUED)

WATER SYSTEM

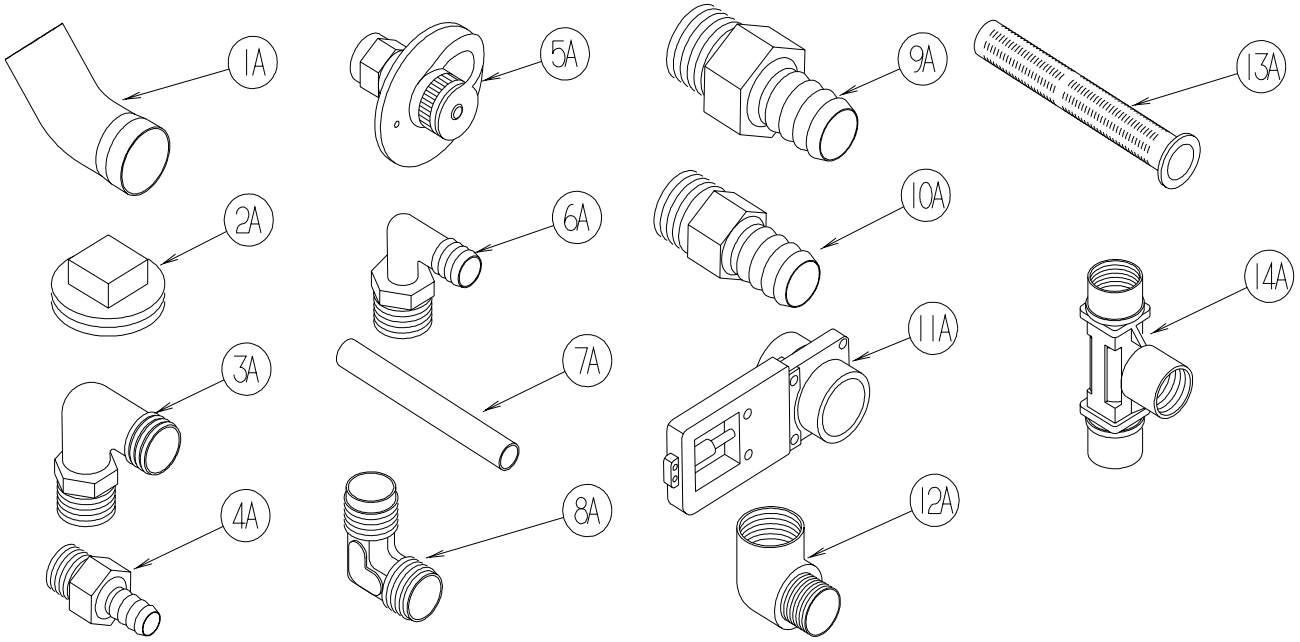

KEY	PART NUMBER	U/M	DESCRIPTION
1A	010009-01-000	EA	ELBOW - 90 DEGREE - 1/4 BEND - 1 1/2" PLASTIC
2A	010166-01-000	EA	PLUG/THREADED - 1 1/4"MPT - PLASTIC - BLACK - UL
3A	010219-01-000	EA	ELBOW - 1 1/4 MPT X 1 1/4 BARB - WATER FILL - PLASTIC
4A	010224-01-000	EA	ADAPTER - HOSE TO PIPE - 3/8 MPT X 3/8 BARB - PLASTIC
5A	010230-06-000	EA	FILL - CITY WATER - W/CHECK VALVE - MPT - BRUSHED ALUM
6A	035539-01-000	EA	ELBOW - 3/8 MPT X 3/8 BARB - PLASTIC
7A	039800-04-000	FT	TUBING - POLYBUTYL - 1/4"OD
7A	074462-02-000	FT	TUBING - VINYL - 3/8 ID X 20' - CLEAR
7A	112176-01-000	FT	TUBING - VINYL - REINFORCED - 1/2" ID
7A	124188-01-000	FT	TUBING - PEX - 1/2" ID X 20' - BLUE(COLD)
7A	124188-02-000	FT	TUBING - PEX - 1/2" ID X 20' - RED(HOT)
8A	039808-03-000	EA	ELBOW - 1/2" MPT X 1/2" MPT - PLASTIC
9A	044927-01-000	EA	ADAPTER - HOSE TO PIPE-1 1/4 MPTX1 1/4 BARB-BLACK PLASTIC
10A	044927-02-000	EA	ADAPTER - REDUCING - 1" MPT X 1.3" BARB - PLASTIC
11A	062421-03-000	EA	VALVE/DUMP W/O HANDLE - 1 1/2" X 1 1/2" HUB
	062421-05-000	EA	CABLE/ROD - F/DUMP VALVE - W/HANDLE - 48"
	062421-07-000	EA	CABLE/ROD - F/DUMP VALVE - W/HANDLE - 144"
	062421-08-000	EA	CABLE/ROD - F/DUMP VALVE - W/HANDLE - 108"
12A	065318-02-000	EA	ELBOW - 90 DEGREE - 3/8" MPT TO 3/8" FPT
13A	077954-02-000	EA	FILTER - WATER TANK - W/SCREEN IN TANK
14A	039798-01-000	EA	TEE - 1/2"MPT X 1/2"MPT X 1/2"MPT - PLASTIC

COPYRIGHT © 2006 WINNEBAGO INDUSTRIES INC.

WATER & SEWAGE GROUP (CONTINUED)

WATER SYSTEM (CONTINUED)

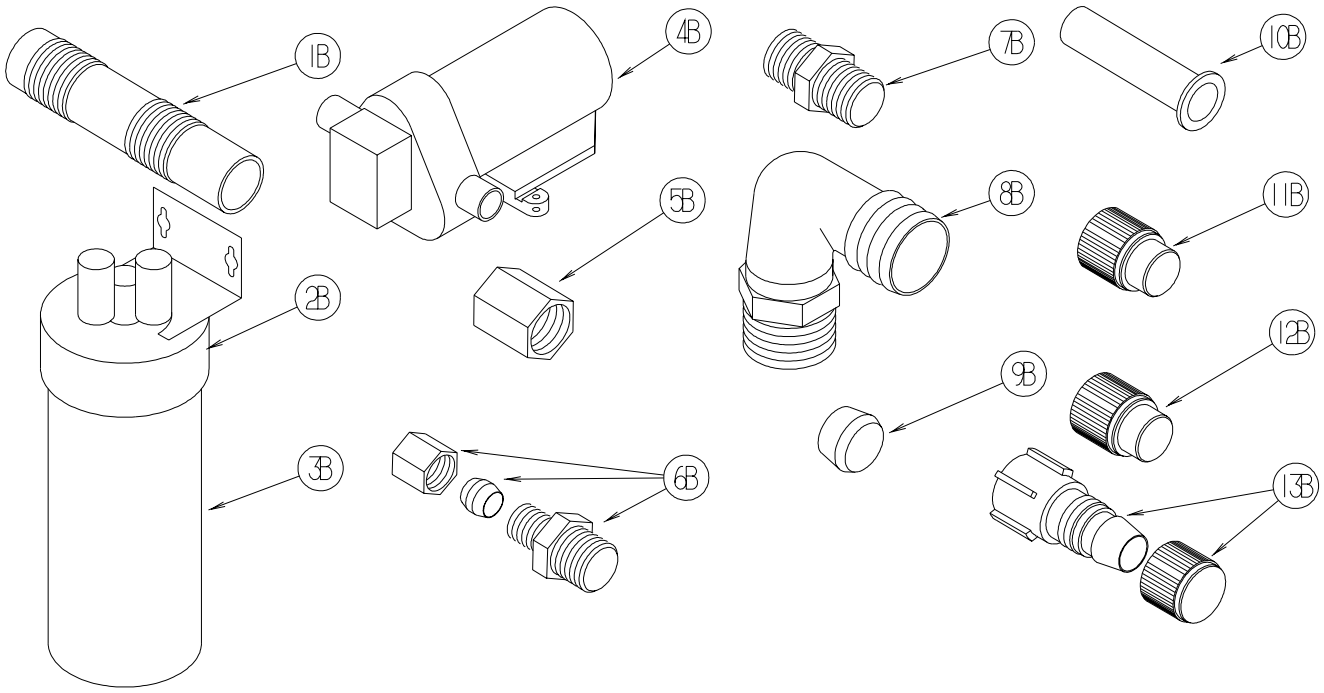

KEY	PART NUMBER	U/M	DESCRIPTION
1B	079381-01-000	FT	TUBING - RIBBED FLEXIBLE - WATER FILL - 1.4" ID
2B	087200-01-000	EA	FILTER-WATER PURIFCATION, EVERPURE QC2-AC
3B	087200-02-000	EA	CARTRIDGE-WATER FILTER,AC - EVERPURE 9601-11
4B*	098607-01-000	EA	PUMP - WATER - W/.5" MPT FITTING - FLOW 2.8 GPM
5B	101814-01-000	EA	COUPLING - FEMALE - 1/2" X 1/2" FPT - GRAY
6B	103798-01-000	EA	CONNECTOR - 1/4 OD X 3/8 MPT
7B	110438-02-000	EA	VALVE - CHECK - BRASS - 1/2 MPT X 1/2 MPT
8B	111223-02-000	EA	ELBOW - 1/2" MPT X 3/8" BARB - PLASTIC
8B	111223-03-000	EA	ELBOW - 3/4" MPT X 1/2" BARB - PLASTIC
8B	111223-04-000	EA	ELBOW - 1/2" MPT X 1/2" BARB - PLASTIC
9B	111888-01-000	EA	FERRULE - PLASTIC - .250 ID X .375 OD
10B	111888-02-000	EA	INSERT - BRASS - 1/4 COMP
11B	113697-01-000	EA	CAP - 3/8"P
12B	114427-01-000	EA	CAP - 1/2"P
13B	114427-02-000	EA	PLUG - W/COMP NUT - 1/2" PLASTIC PIPE/1/2" FLAIR-IT

COPYRIGHT © 2006 WINNEBAGO INDUSTRIES INC.

WATER & SEWAGE GROUP (CONTINUED)

WATER SYSTEM (CONTINUED)

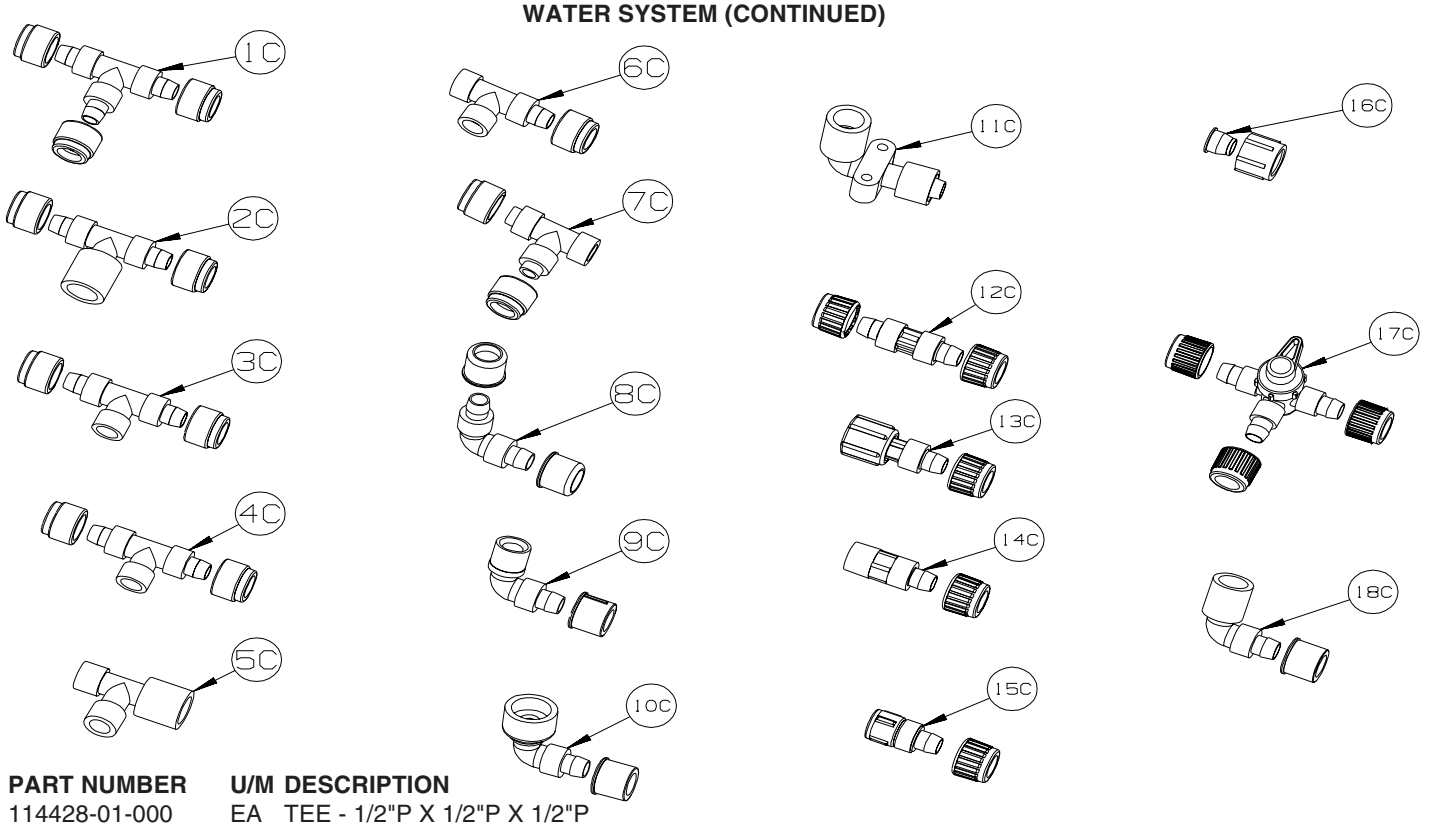

KEY	PART NUMBER	U/M	DESCRIPTION
1C	114428-01-000	EA	TEE - 1/2"P X 1/2"P X 1/2"P
2C	114428-02-000	EA	TEE - SWIVEL - 1/2"P X 1/2"P X 1/2"FPT
3C	114428-03-000	EA	TEE - 1/2"P X 1/2"P X 1/2"MPT
4C	114428-04-000	EA	TEE - 1/2"P X 1/2"P X 1/8"FPT
5C	114428-05-000	EA	TEE - 1/2" SWIVEL X 1/2" MPT X 1/2" MPT
6C	114428-06-000	EA	TEE - 1/2" P X 1/2" MPT X 1/2" MPT
7C	114428-07-000	EA	TEE - 1/2" P X 1/2" MPT X 1/2" P
8C	114429-01-000	EA	ELBOW - 1/2"P X 1/2"P
9C	114429-02-000	EA	ELBOW - 1/2"P X 1/2"MPT
9C	114429-04-000	EA	ELBOW - 1/2"P X 3/8"MPT
9C	114429-05-000	EA	ELBOW - 1/2"P X 3/4"MPT
9C	114429-10-000	EA	ELBOW - SWIVEL - 1/2"MPT X 1/2"FPT
10C	114429-06-000	EA	ELBOW - SWIVEL - 1/2"P X 3/4"FPT
10C	114429-08-000	EA	ELBOW - SWIVEL - 1/2"P X 1/2"FPT
11C	114429-09-000	EA	ELBOW - 1/2"P X 1/2"FPT DROP EAR
12C	114430-01-000	EA	ADAPTER - 1/2"P X 1/2"P
13C	114430-02-000	EA	ADAPTER - SWIVEL - 1/2"P X 1/2"FPT
13C	114430-04-000	EA	ADAPTER - SWIVEL - 1/2"P X 3/8"MPT
14C	114430-03-000	EA	ADAPTER - 1/2"P X 1/2"MPT
15C	114430-06-000	EA	ADAPTER - 1/2"P X 3/8"FPT
15C	114430-09-000	EA	ADAPTER - 1/2"P X 1/2"FPT
16C	114430-10-000	EA	ADAPTER - NUT - PIPE CONNECTION - 1/2"
17C	114431-01-000	EA	VALVE - 180 DEGREE/CENTER DRAIN - 1/2"P - THREE WAY
18C	114429-11-000	EA	ELBOW - 1/2"P X 1/2"FPT

COPYRIGHT © 2006 WINNEBAGO INDUSTRIES INC.

WATER & SEWAGE GROUP (CONTINUED)

WATER SYSTEM (CONTINUED)

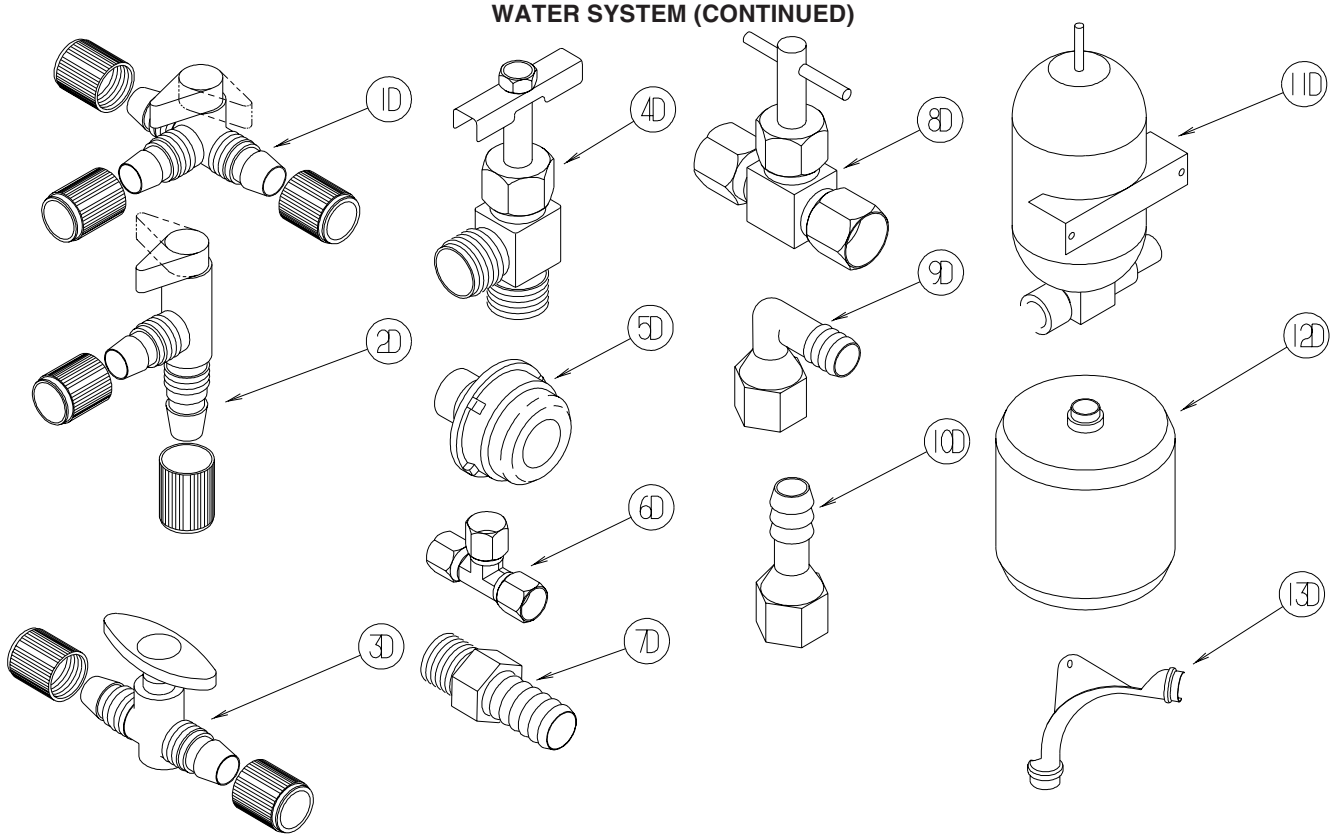

KEY	PART NUMBER	U/M	DESCRIPTION
1D	114431-02-000	EA	VALVE - WATER BYPASS - 1/2"P - THREE WAY (WATER HEATER)
2D	114431-03-000	EA	VALVE - 90 DEGREE DRAIN - 1/2"P
3D	114431-04-000	EA	VALVE - “INLINE SHUT-OFF” - 1/2"P
4D	114431-05-000	EA	VALVE - NEEDLE - 1/8" MPT X 1/4" COMPRESSION (ICE MAKER)
5D	114966-01-000	EA	FILTER - IN LINE - TWIST ON - 1/2" - NOT ILLUSTRATED FROM: 00-00-00 THRU: 09-26-04
5D	152925-01-01A	EA	FILTER - IN LINE - TWIST ON - 1/2" - BLACK - NOT ILLUSTRATED FROM: 09-27-04 THRU: 99-99-99
6D	118423-01-000	EA	FITTING - BRASS-TEE - 1/4C X 1/4C X 1/4C
7D	118809-01-000	EA	ADAPTER - 1/2" MPT X 3/8" BARB - PLASTIC
7D	118809-02-000	EA	ADAPTER - 1/2" MPT X 1/2" BARB - PLASTIC
8D	120868-01-000	EA	VALVE - NEEDLE - 1/4" COMPRESSION X 1/4" COMPRESSION
9D	123150-01-000	EA	ELBOW - 1/2 FPT X 1/2 BARB - SWIVEL
10D	123152-01-000	EA	ADAPTER - 1/2 FPT X 1/2 BARB - SWIVEL
11D	123243-01-000	EA	TANK - ACCUMULATOR - 24 OZ
12D	123317-01-000	EA	TANK - ACCUMULATOR - 2 GALLON
13D	124184-01-000	EA	SUPPORT - WATER LINE - BEND

COPYRIGHT © 2006 WINNEBAGO INDUSTRIES INC.

WATER & SEWAGE GROUP (CONTINUED)

WATER SYSTEM (CONTINUED)

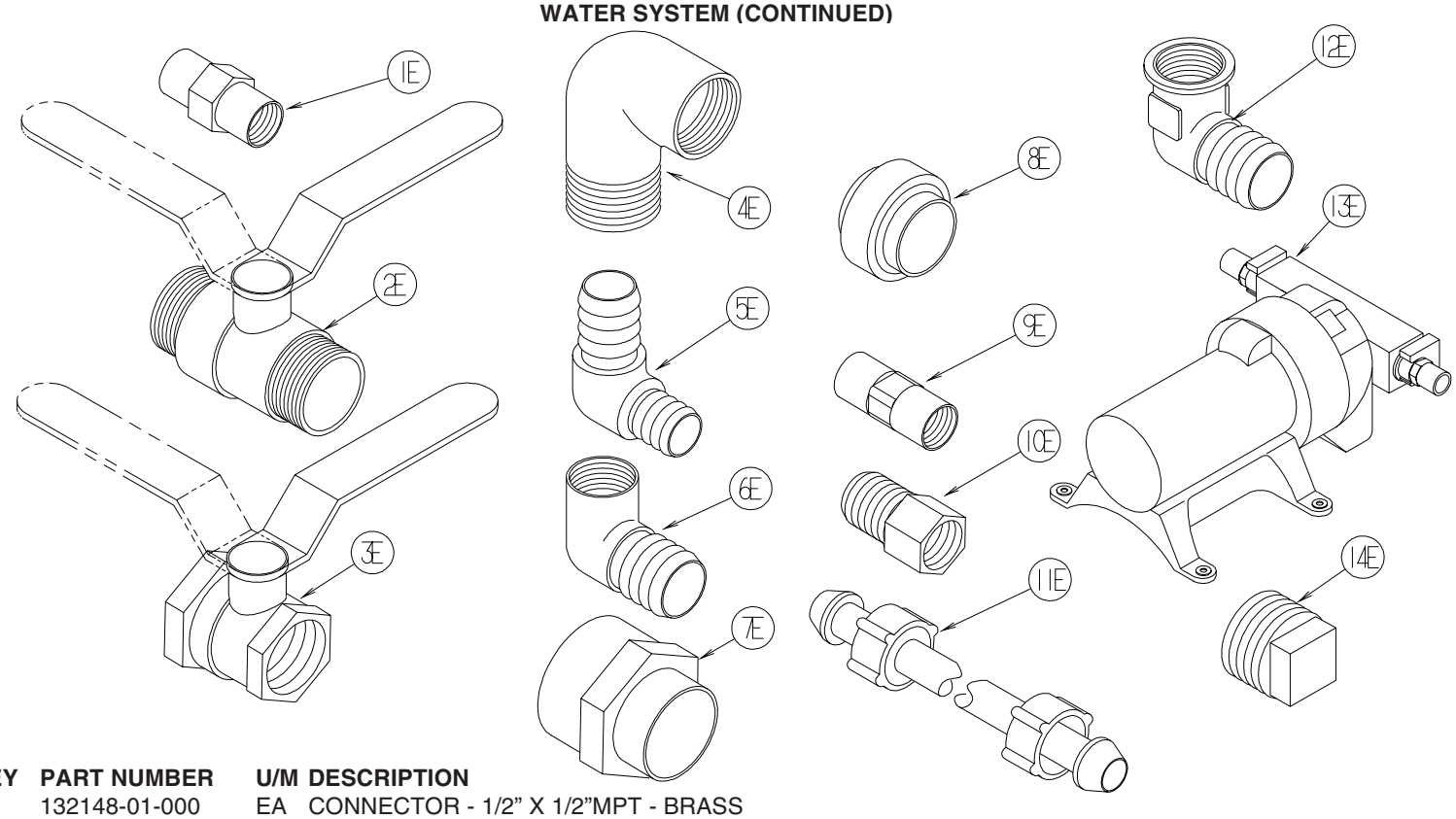

KEY	PART NUMBER	U/M	DESCRIPTION
1E	132148-01-000	EA	CONNECTOR - 1/2” X 1/2”MPT - BRASS
2E	132483-01-000	EA	VALVE/BALL - 1" - THREADED ENDS
3E	132483-02-000	EA	VALVE/BALL - 1/2" - BRASS - FPT
4E	132484-01-000	EA	ELBOW - 90 DEGREE - 1MPT X 1FPT - PLASTIC
5E	132781-01-000	EA	ELBOW - 1.3" BARB X 1.3" BARB - 90 DEGREE - PLASTIC
6E	132782-01-000	EA	ELBOW - 1"FPT X 1.3" BARB - 90 DEGREE - PLASTIC
7E	133835-01-000	EA	ADAPTER - REDUCING - 1 1/2" X 1 1/4"
8E	133889-01-000	EA	UNION - 1 1/2 DOUBLE SLIP - PVC
9E	135386-01-000	EA	NIPPLE - 1/2"
10E	136333-01-000	EA	ADAPTER - BRASS - 1/2"MPT X 1/2"FPT
11E	140821-01-000	EA	TUBE - WATER SUPPLY - 3/8" X 24"
11E	140821-02-000	EA	TUBE - WATER SUPPLY - 3/8" X 30"
11E	140821-03-000	EA	TUBE - WATER SUPPLY - 3/8" X 36"
11E	140821-04-000	EA	TUBE - WATER SUPPLY - 3/8" X 48"
11E	140821-05-000	EA	TUBE - WATER SUPPLY - 3/8" X 54"
11E	140821-06-000	EA	TUBE - WATER SUPPLY - 3/8" X 60"
11E	140821-07-000	EA	TUBE - WATER SUPPLY - 3/8" X 72"
11E	140821-08-000	EA	TUBE - WATER SUPPLY - 1/2" X 24"
11E	140821-09-000	EA	TUBE - WATER SUPPLY - 1/2" X 36"
11E	140821-10-000	EA	TUBE - WATER SUPPLY - 1/2" X 48"
12E	142812-01-000	EA	ELBOW - BRASS - 1/2"MPT X 1/2"FPT
13E*	144215-01-000	EA	PUMP - WATER - 5.7 GPM - W/1/2" MPT
*	144215-02-000	EA	STRAINER - WATER PUMP
14E	145609-01-000	EA	PLUG - BRASS - 1/2" MPT/HEX HEAD

***COMPONENT PARTS LISTED LATER IN THIS GROUP**

COPYRIGHT © 2006 WINNEBAGO INDUSTRIES INC.

WATER & SEWAGE GROUP (CONTINUED)

WATER SYSTEM (CONTINUED)

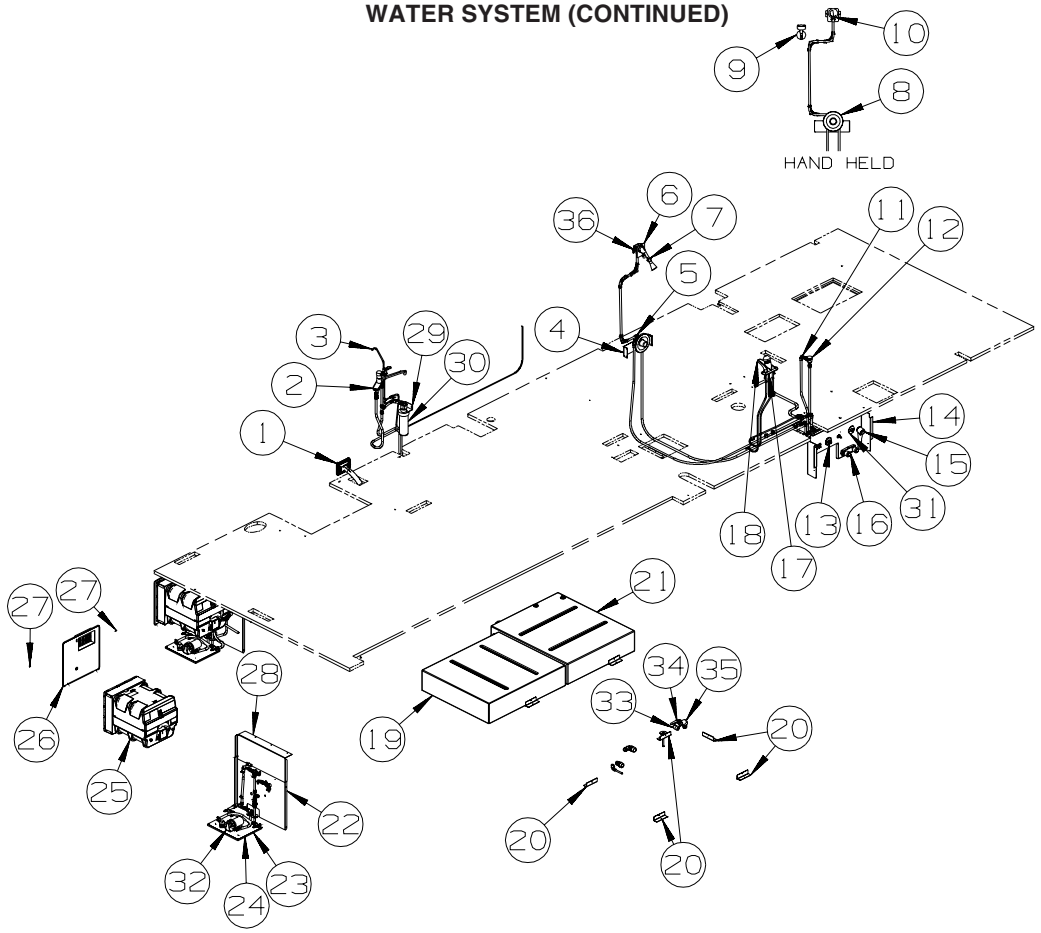

KEY	PART NUMBER	U/M	DESCRIPTION
1	137169-01-01A	EA	WATER FILL/GRAVITY - W/DOOR - W/O LOCK - BRIGHT WHITE
	137169-02-01A	EA	ADAPTER/LOCK - (WASHER) F/GRAVITY WATERFILL
2*	123744-03-01A	EA	FAUCET - GALLEY/SINGLE CONTROL W/SPRAYER HEAD - CHROME
3*	103635-01-000	EA	FAUCET - SINGLE CONTROL/DRINKING WATER
4	133721-01-02B	EA	BRACKET - SHOWER CONTROL - E-COATED
5*	144596-01-01A	EA	VALVE ONLY - FAUCET/SHOWER - W/TEMP LIMIT STOP(MOEN 62300)
5	144596-03-02A	EA	TRIM KIT - (KNOB/HANDLE/PLATE/SHOWER HEAD & ARM) - CHROME
6	131549-01-01A	EA	PLATE/COVER - SHOWER HEAD - PLASTIC
6	133727-01-02B	EA	BRACKET - SHOWER HEAD - E-COATED
7	128974-01-02A	EA	VALVE - SHOWER HEAD/WATER SAVER (ON/OFF) - CHROME
8	144596-02-02A	EA	TRIM KIT - (KNOB & PLATE) - CHATEAU - CHROME
8*	144596-01-01A	EA	VALVE ONLY - FAUCET/SHOWER - W/TEMP LIMIT STOP(MOEN 62300)
9*	129390-03-02A	EA	SHOWER HEAD - W/HOSE & BRACKET - CHROME
10	135028-02-02A	EA	DROP ELL - F/HAND HELD SHOWER HEAD/OVAL - W/1/2"IPS-CHROME
10	130041-03-18A	EA	SPACER/SHOWER HEAD - SOFT WHITE
10	128974-01-02A	EA	VALVE - SHOWER HEAD/WATER SAVER (ON/OFF) - CHROME
11	125697-03-000	EA	CHECK VALVE - F/FLUSHING SYSTEM
12	125697-04-000	EA	BREAKER/VACUUM - F/FLUSHING SYSTEM
13	125697-05-000	EA	INLET/WATER - F/FLUSHING SYSTEM
14	136034-11-12B	EA	PANEL - SERVICE CENTER - BRIGHT WHITE
15	131383-01-02A	EA	SHOWER HEAD - W/60" HOSE & BRACKET - WHITE
16*	075241-06-000	EA	FAUCET/SHOWER -.5"MPT W/1.9" INLET PIPES- EXTERIOR/BRT WHT
17	105218-01-01A	EA	SPACER - FAUCET/LAVATORY SINK - 2" X 5.9" - ABS PLASTIC
18	134735-01-02A	EA	FAUCET - LAVATORY - SINGLE CONTROL - CHROME
19	132224-05-000	EA	TANK - WATER - 40 GALLON - W/FITTINGS - 37.8"X 33.1"X 8.3"
	042989-03-000	EA	FITTING - SPINWELD - 1 1/4"NPT - PLASTIC
	042989-05-000	EA	FITTING - SPINWELD - 1/2"FPT - PLASTIC
	049032-01-000	EA	PATCH - SPINWELD - 3/8" - PLASTIC
20	142053-30-134	EA	ANGLE-STL,ROOF JOINT,0134 MM - TOP COAT OFF WHITE

COPYRIGHT © 2006 WINNEBAGO INDUSTRIES INC.

WATER & SEWAGE GROUP (CONTINUED)

WATER SYSTEM (CONTINUED)

KEY	PART NUMBER	U/M	DESCRIPTION
21	132224-37-000	EA	TANK - WATER - 40 GALLON - W/FITTINGS - 37.8"X 33.1"X 8.3"
	042989-03-000	EA	FITTING - SPINWELD - 1 1/4"NPT - PLASTIC
	042989-05-000	EA	FITTING - SPINWELD - 1/2"FPT - PLASTIC
	042989-08-000	EA	FITTING - SPINWELD - 1"FPT - PLASTIC
	049032-01-000	EA	PATCH - SPINWELD - 3/8" - PLASTIC
22	149497-05-12B	EA	PANEL - F/VALVE BYPASS - BRIGHT WHITE
23	149477-03-02B	EA	PANEL - WATER PUMP - E-COATED
24	140364-05-01A	EA	FOAM - PAD - .5" X 12" X 15"
25*	145541-01-000	EA	WATER HEATER/MOTOR AID-GAS/ELECT IGN - GCH10A-4E - 10 GAL
26*	125420-03-03A	EA	DOOR - WATER HEATER - 18" X 17.7" - BLACK
27	117047-02-000	EA	BUMPER - RUBBER/WASHER INSERT
28	149497-07-12B	EA	PANEL - F/VALVE BYPASS - BRIGHT WHITE
29	087200-01-000	EA	FILTER - WATER PURIFICATION
30	087200-02-000	EA	CARTRIDGE - WATER FILTER
31	010230-06-000	EA	FILL - CITY WATER - W/CHECK VALVE - MPT - BRUSHED ALUM
32*	144215-01-000	EA	PUMP - WATER - 5.7 GPM - W/1/2" MPT
			FROM: 00-00-00 THRU: 02-05-06
32*	098607-01-000	EA	PUMP - WATER - W/.5" MPT FITTING - FLOW 2.8 GPM
			FROM: 02-06-06 THRU: 02-05-06
33	132484-01-000	EA	ELBOW - 90 DEGREE - 1MPT X 1FPT - PLASTIC
34	132483-01-000	EA	VALVE/BALL - 1" - THREADED ENDS
35	132782-01-000	EA	ELBOW - 1"FPT X 1.3" BARB - 90 DEGREE - PLASTIC
36	133727-01-02B	EA	BRACKET - SHOWER HEAD - E-COATED

***COMPONENT PARTS LISTED LATER IN THIS GROUP**

COMPONENT PARTS FOR WATER SYSTEM

075241-04-000, 075241-05-000, 075241-06-000

KEY	PART NUMBER	U/M	DESCRIPTION	VENDOR NO.
	075240-05-700	EA	CARTRIDGE - WASHERLESS	9-P42

098607-01-000

KEY	PART NUMBER	U/M	DESCRIPTION	VENDOR NO.
	098607-01-702	EA	DIAPHRAGM/DRIVE ASSEMBLY KIT	94-238-04
	098607-01-703	EA	VALVE KIT	94-232-00
	098607-01-705	EA	VALVE-CHECK, KIT	94-237-00
	098607-01-706	EA	HOUSING, W/SWITCH ONLY	94-231-20
	098607-01-707	EA	MOTOR W/BASEPLATE	11-148-04

103635-01-000

KEY	PART NUMBER	U/M	DESCRIPTION	VENDOR NO.
	103635-01-703	EA	CARTRIDGE - 10”	ADC-959201

123744-03-01A

KEY	PART NUMBER	U/M	DESCRIPTION	VENDOR NO.
	135027-01-700	EA	CLIP - RETAINER	883
	135027-01-705	EA	CARTRIDGE F/SGL LEVER FAUCET	1225

125420-01-02A, 125420-01-03A, 125420-03-03A, 125420-04-03A

KEY	PART NUMBER	U/M	DESCRIPTION	VENDOR NO.
	051391-01-705	EA	FASTENER - CAMLOCK	92609

129390-03-02A

KEY	PART NUMBER	U/M	DESCRIPTION	VENDOR NO.
	129390- 03- 702	EA	CONNECTOR-SWIVEL - CHROME	A-4002-CPK

COPYRIGHT © 2006 WINNEBAGO INDUSTRIES INC.

WATER & SEWAGE GROUP (CONTINUED)

COMPONENT PARTS FOR WATER SYSTEM (CONTINUED)

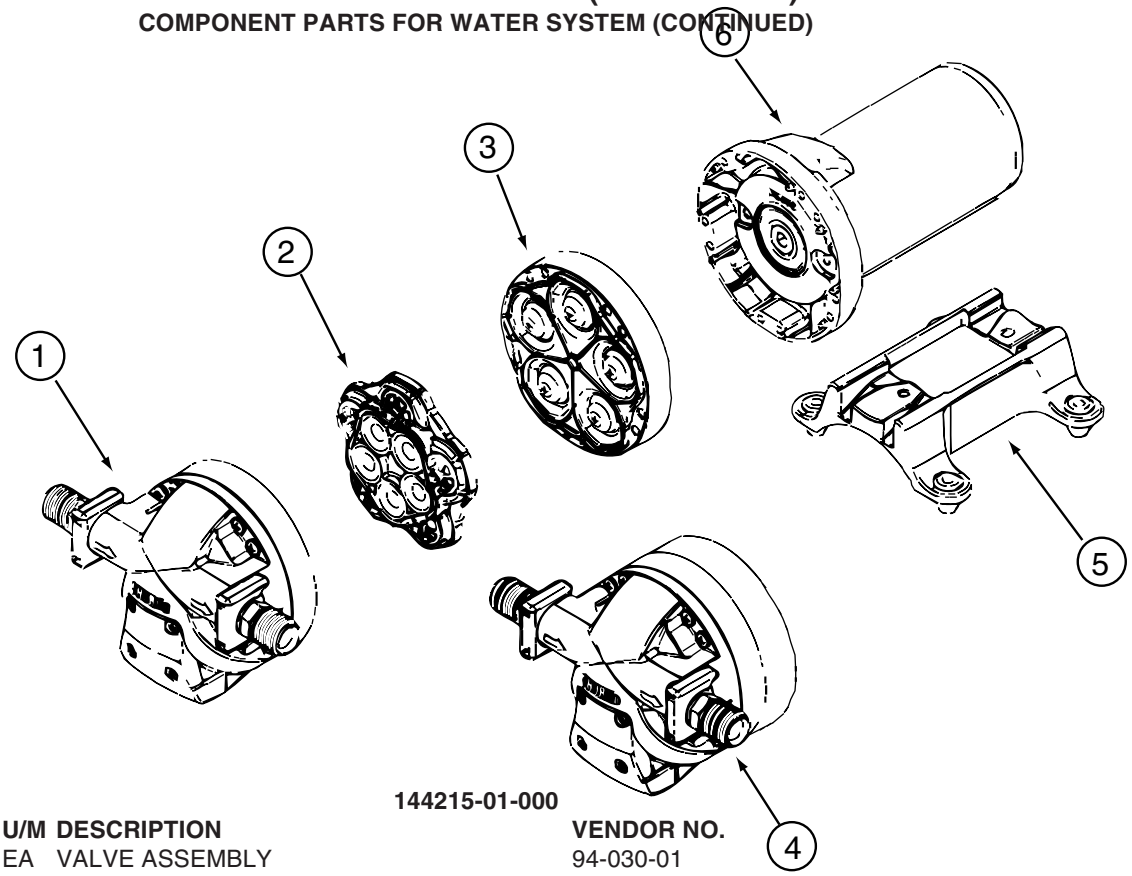

144215-01-000

KEY	PART NUMBER	U/M	DESCRIPTION	VENDOR NO.
2	144215-01-700	EA	VALVE ASSEMBLY	94-030-01
3	144215-01-701	EA	DRIVE ASSEMBLY	94-030-02
	144215-01-702	EA	FITTING KIT - W/ORINGS	94-615-06
			CONTACT WINNEBAGO PARTS SALES FOR UNLISTED COMPONENT(S)	

144215-02-000

KEY	PART NUMBER	U/M	DESCRIPTION	VENDOR NO.
	144215-02-700	EA	FITTING KIT- COUPLER W/ORING	94-637-00

144596-01-01A

KEY	PART NUMBER	U/M	DESCRIPTION	VENDOR NO.
	144596-01-700	EA	CARTRIDGE (REPLACEMENT)	1222

COPYRIGHT © 2006 WINNEBAGO INDUSTRIES INC.

WATER & SEWAGE GROUP (CONTINUED)

COMPONENT PARTS FOR WATER SYSTEM (CONTINUED)

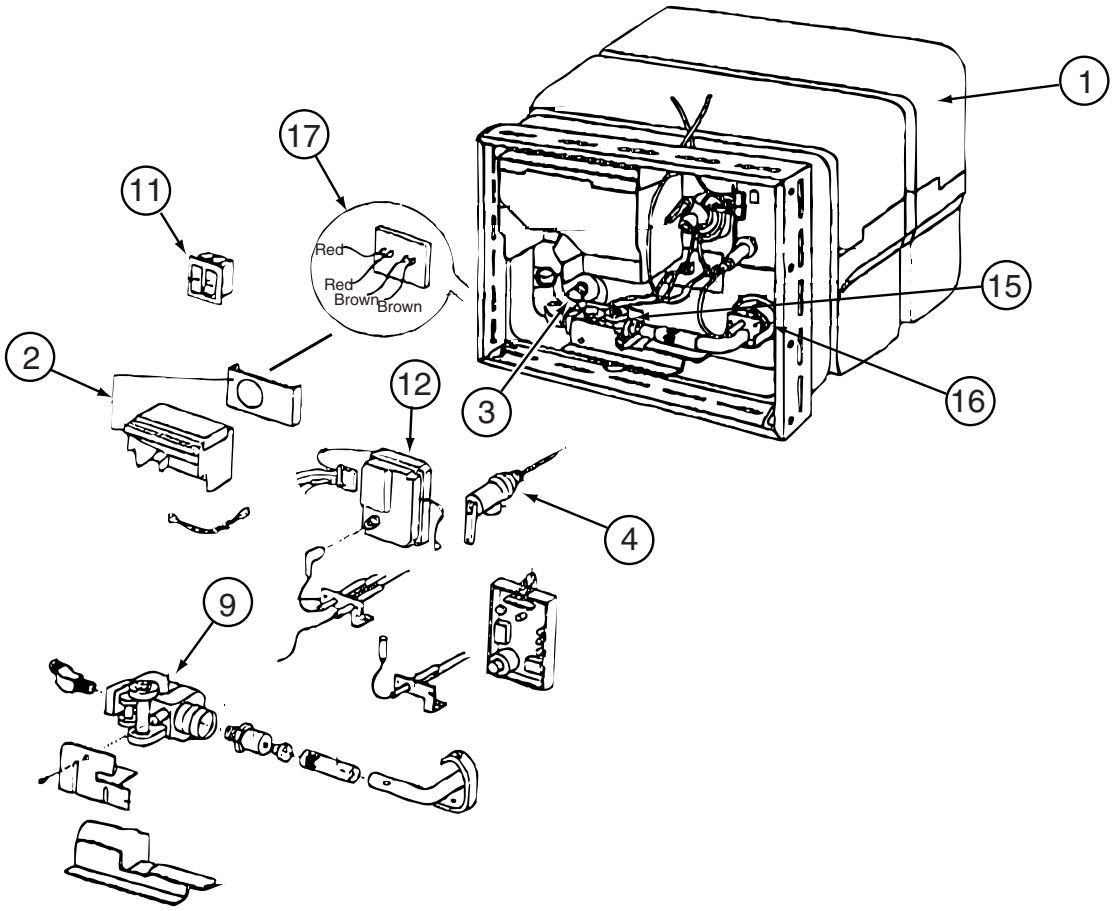

145541-01-000

KEY	PART NUMBER	U/M	DESCRIPTION	VENDOR NO.
1	145541-01-700	EA	TANK - W/INSULATION - 10 GAL	91028
2	051391-04-707	EA	KIT-EXHAUST, (FLUE & GASKET)	90960
3	051391-01-715	EA	PLUG-DRAIN, 1 EA = 2 PER PKG	91857
4	051391-01-704	EA	VALVE-RELIEF, 1/2" FITTING	91604
9	051393-01-726	EA	VALVE/SOLENOID - W/O BRACKET	93870
11	145541-01-701	EA	SWITCH - ON/OFF - WHITE	91859
12	145541-01-702	EA	CIRCUIT BOARD	91226
15	145541-01-703	EA	SWITCH - THERMAL CUT OFF	93866
16	051393-01-725	EA	ELECTRODE-SGL SPADE CONNECT.	93868
17	051393-01-721	EA	THERMOSTAT W/ECO, 140 FRT MT	91447
	051391-05-706	EA	ELEMENT-HEATING 1500 WATT	92249 W/GASKET
	051393-01-701	EA	SWITCH - REMOTE - W/LIGHT	91959
	145541-01-704	EA	RELAY	90061
	145541-01-705	EA	JUNCTION BOX(PLASTIC) 10 GAL	91224

CONTACT WINNEBAGO PARTS SALES FOR UNLISTED COMPONENT(S)

COPYRIGHT © 2006 WINNEBAGO INDUSTRIES INC.

WINDOW & VENTS GROUP

WINDOW & VENT LAYOUT

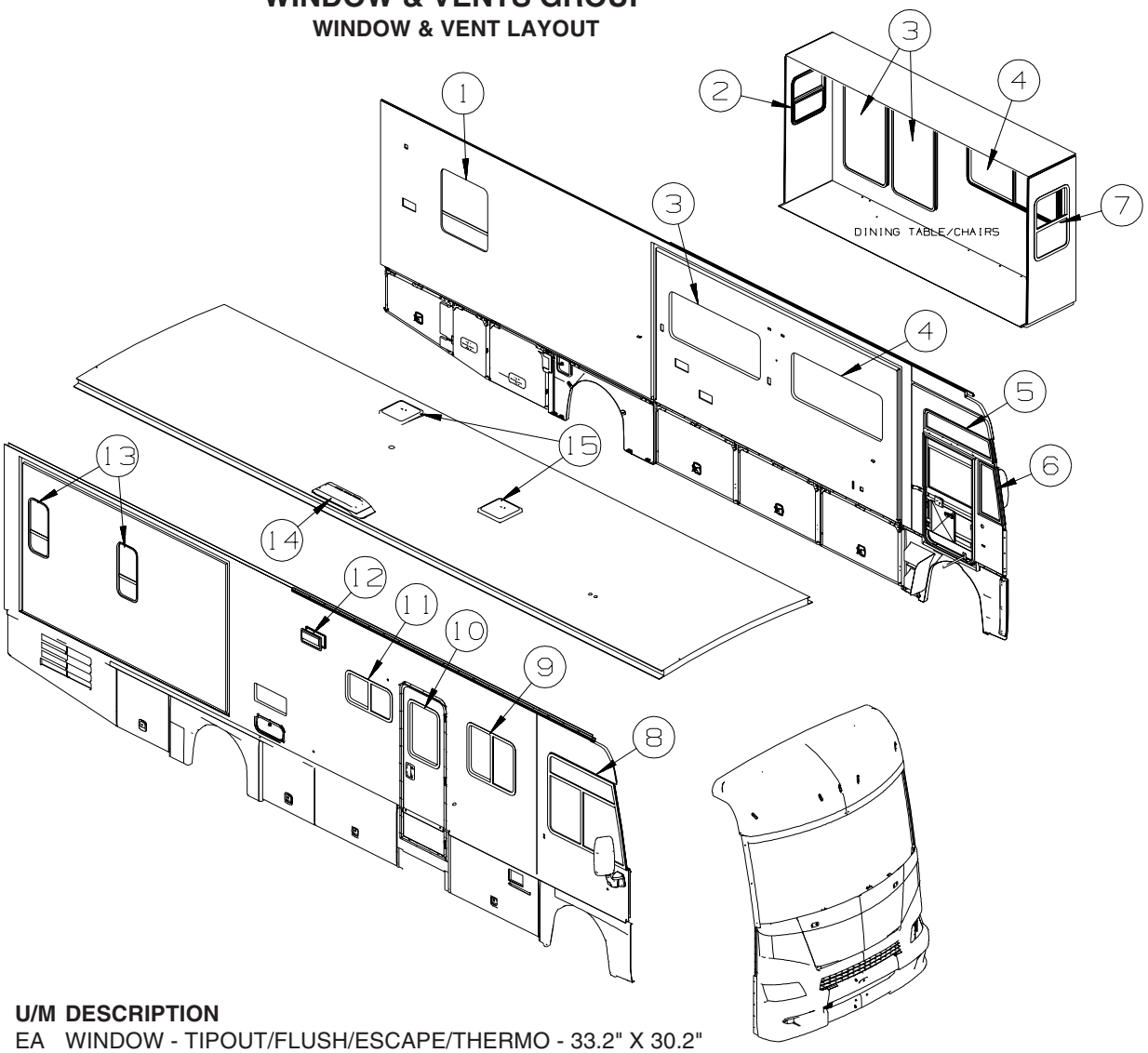

KEY	PART NUMBER	U/M	DESCRIPTION
1*	150656-02-01A	EA	WINDOW - TIPOUT/FLUSH/ESCAPE/THERMO - 33.2" X 30.2"
2*	150649-08-01A	EA	WINDOW - VERT SLIDER/FLUSH/THERMO - 23.8" X 20.8"
2*	150649-18-01A	EA	WINDOW - VERT SLIDER/FLUSH/THERMO - 55.4" X 22.1" - DINING TABLE/CHAIRS
2	151905-01-01A	EA	CLIP/BRACKET - SCREEN RETAINER - BLACK
3*	150648-07-01A	EA	WINDOW-HORIZ SLIDER/FLUSH/THERMO/LH - 23.8" X 57.7"
3*	150656-05-01A	EA	WINDOW - TIPOUT/FLUSH/THERMO - 56.1" X 26.7" - DINING TABLE/CHAIRS
4*	150648-07-01A	EA	WINDOW-HORIZ SLIDER/FLUSH/THERMO/LH - 23.8" X 57.7"
5*	151074-01-01A	EA	WINDOW - CAB/VISTA/FLUSH/THERMO - 11.3" X 44.7"/41.8"
6*	151073-01-01A	EA	WINDOW - CAB/FRT SLANT/FLUSH/THERMO - 28.1" X 19.7"/6.6"
7*	150649-19-01A	EA	WINDOW - VERT SLIDER/FLUSH/THERMO - 31.7" X 21.1"
7	151905-01-01A	EA	CLIP/BRACKET - SCREEN RETAINER - BLACK
8*	151072-01-01A	EA	WINDOW - CAB/RIGHT HAND/FLUSH/THERMO - 41.5" X 50.2"/41.8"
9*	150648-10-01A	EA	WINDOW-HORIZ SLIDER/FLUSH/THERMO/RH - 26.3" X 29.8"
10*	150651-07-01A	EA	WINDOW - STATIONARY/FLUSH/THERMO - 26.3" X 19.1" - BLACK
11*	150648-04-01A	EA	WINDOW-HORIZ SLIDER/FLUSH/THERMO/RH - 16" X 28.7"
12	138983-01-01A	EA	VENT - MICROWAVE/OUTER - BRIGHT WHITE
12	138983-01-02A	EA	VENT - MICROWAVE/OUTER - BLACK - FULL BODY PAINT
12	138983-03-01A	EA	COVER - VENT MICROWAVE/OUTER - BRIGHT WHITE
13*	150656-10-01A	EA	WINDOW - TIPOUT/FLUSH/THERMO - 27.2" X 12.3"
14	149508-01-02A	EA	CAP - ROOF/REFRIGERATOR VENT - WHITE
14	149508-01-01A	EA	CAP - ROOF/REFRIGERATOR VENT - GRAY - FULL BODY PAINT
14	149508-02-02A	EA	BASE - ROOF/REFRIGERATOR VENT - BRIGHT WHITE
14	149508-02-01A	EA	BASE - ROOF/REFRIGERATOR VENT - BLACK - FULL BODY PAINT
14	069640-03-000	FT	SEALER - TAPE - 1/8"THICK X 3/4"WIDE X 60 FT - BLACK
15*	123780-10-01A	EA	FANTASTIC VENT-4"ROOF-W/FAN/PWR LIFT/DBL DOME-W/O THERM
	009440-01-000	EA	GEAR/ARM - LIFT - ROOF VENT COVER

***COMPONENT PARTS LISTED LATER IN THIS GROUP**

COPYRIGHT © 2006 WINNEBAGO INDUSTRIES INC.

WINDOW & VENTS GROUP (CONTINUED)

COMPONENT PARTS FOR WINDOW & VENT LAYOUT

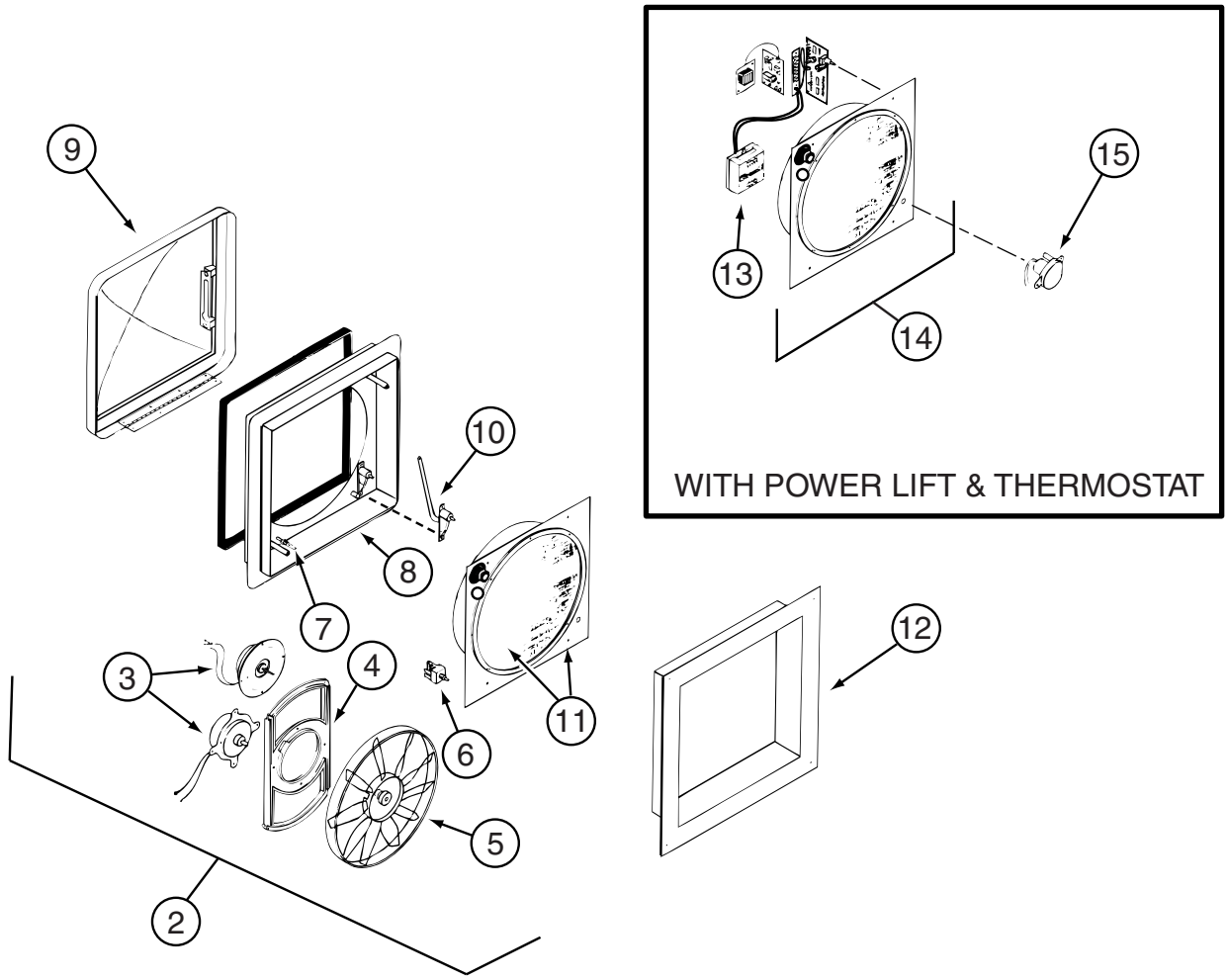

123780-10-01A

KEY	PART NUMBER	U/M	DESCRIPTION	VENDOR NO.
2	084079-11-700	EA	MOTOR & FAN BLADE W/BRACKET	K4017-09
3	084079-01-705	EA	MOTOR/EXT BRKT/FAN BLADE KIT	1080-00
4	084079-01-711	EA	MOTOR MOUNT (BOWTIE)	1015-00
5	084079-01-704	EA	BLADE-FAN	1138-00
6	084079-01-709	EA	SWITCH - MAIN - 3 SPEED	1031-05
7	084079-01-707	EA	SWITCH - SAFETY	1122-05
8	123780-05-700	EA	BASE/MAIN-BRT WHT W/GASKET	1010-81
9	123780-09-700	EA	DOME (DOUBLE)WHT TRANSPARENT	K2020-82
11	123780-01-702	EA	SCREEN INSERT (SCREEN RING)	K1035-81
12	123780-03-700	EA	GARNISH - INT. 3"-4" BRT/WHT	2040-81
13	084079-01-710	EA	THERMOSTAT(WALL MT)ANY COLOR	9988-81
14	123780-05-701	EA	SCREEN INT W/ALL SWITCHES	KIT-81
15	084079-11-703	EA	MOTOR/AUTO LIFT OFF/WHT CAP	6050-80 OS
15	084079-11-705	EA	MOTOR - LIFT (BC MOTOR)	5050-40
15	084079-11-707	EA	MOTOR-AUTO LIFT-WHT CAP NS	6050-81 NS

CONTACT WINNEBAGO PART SALES FOR UNLISTED COMPONENT(S)

COPYRIGHT © 2006 WINNEBAGO INDUSTRIES INC.

WINDOW & VENTS GROUP (CONTINUED)

COMPONENT PARTS FOR WINDOW & VENT LAYOUT (CONTINUED)

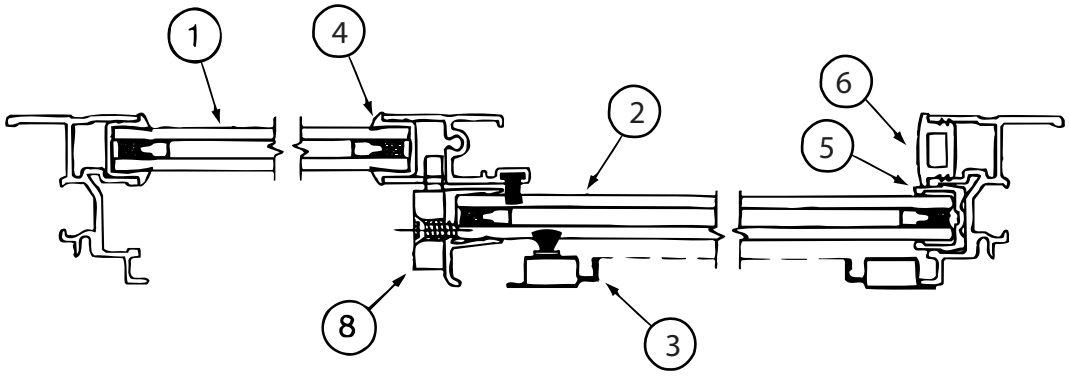

CROSS SECTION B-B

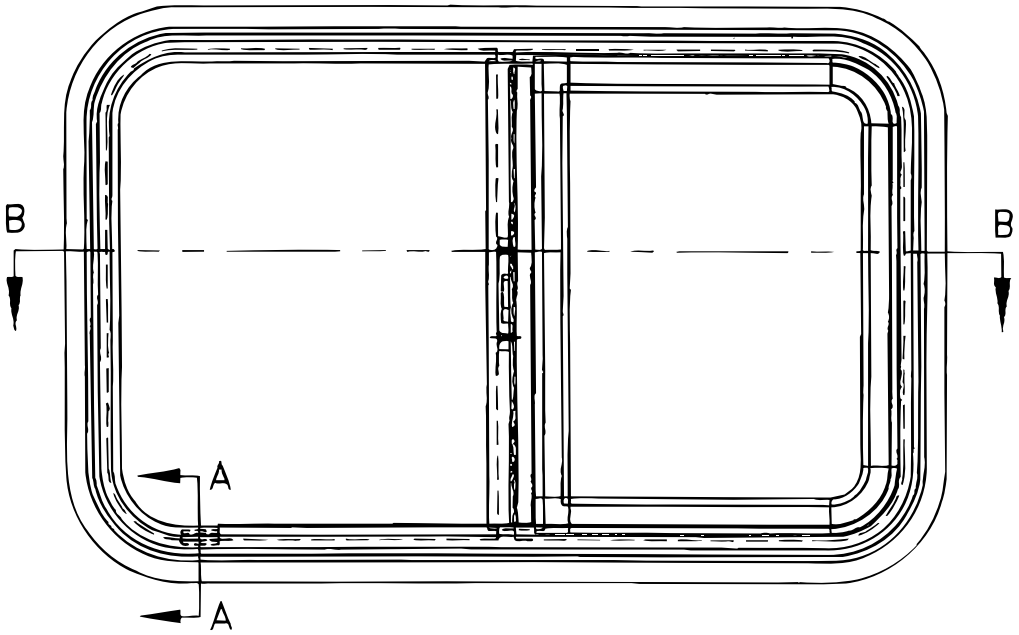

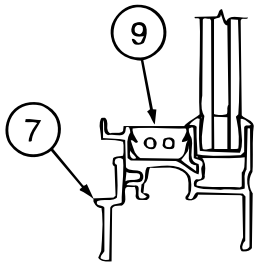

CROSS SECTION
A-A

150648-04-01A

KEY	PART NUMBER	U/M	DESCRIPTION	VENDOR NO
1	112795-72-700	EA	GLASS - STATIONARY	390-028307
2	150648-04-700	EA	GLASS-SLIDING W/SASH & LATCH	FH3002G8
3	150648-05-700	EA	SCREEN ASM	410-031158
4	112795-01-705	FT	VINYL - GLAZING	132-027331
5	151069-01-700	EA	CHANNEL-RUN, SLIDING	122-030627
6	150648-01-703	EA	PLUG - FILLER	132-030308
7	150648-05-701	EA	RETAINER - TRIM	CH29-67
8	150648-01-700	EA	LATCH-HORIZONTAL SLIDE-BLK	FH3000-CK
8	150648-01-701	EA	LATCH-HORIZONTAL SLIDE-RED	FH3003-CK
9	150648-01-704	EA	SLIDE STOP	132-030866

COPYRIGHT © 2006 WINNEBAGO INDUSTRIES INC.

WINDOW & VENTS GROUP (CONTINUED)

COMPONENT PARTS FOR WINDOW & VENT LAYOUT (CONTINUED)

150648-07-01A

KEY	PART NUMBER	U/M	DESCRIPTION	VENDOR NO
1	150648-07-701	EA	GLASS - STATIONARY	390-028314
2	150648-07-700	EA	GLASS-SLIDING W/SASH & LATCH	FH3000G8
3	150648-01-702	EA	SCREEN ASM	410-031156
4	112795-01-705	FT	VINYL - GLAZING	132-027331
5	151069-01-700	EA	CHANNEL-RUN, SLIDING	122-030627
6	150648-01-703	EA	PLUG - FILLER	132-030308
7	150648-01-707	EA	RETAINER - TRIM	H493-67
8	150648-01-700	EA	LATCH-HORIZONTAL SLIDE-BLK	FH3000-CK
8	150648-01-701	EA	LATCH-HORIZONTAL SLIDE-RED	FH3003-CK
9	150648-01-704	EA	SLIDE STOP	132-030866

150648-10-01A

KEY	PART NUMBER	U/M	DESCRIPTION	VENDOR NO
1	150648-10-701	EA	GLASS - STATIONARY	390-028381
2	150648-10-702	EA	GLASS-SLIDING W/SASH & LATCH	FH3001G8
3	150648-10-700	EA	SCREEN ASM	410-031157
4	112795-01-705	FT	VINYL - GLAZING	132-027331
5	151069-01-700	EA	CHANNEL-RUN, SLIDING	122-030627
6	150648-01-703	EA	PLUG - FILLER	132-030308
7	150648-10-703	EA	RETAINER - TRIM	H286-67
8	150648-01-700	EA	LATCH-HORIZONTAL SLIDE-BLK	FH3000-CK
8	150648-01-701	EA	LATCH-HORIZONTAL SLIDE-RED	FH3003-CK
9	150648-01-704	EA	SLIDE STOP	132-030866

COPYRIGHT © 2006 WINNEBAGO INDUSTRIES INC.

WINDOW & VENTS GROUP (CONTINUED)

COMPONENT PARTS FOR WINDOW & VENT LAYOUT (CONTINUED)

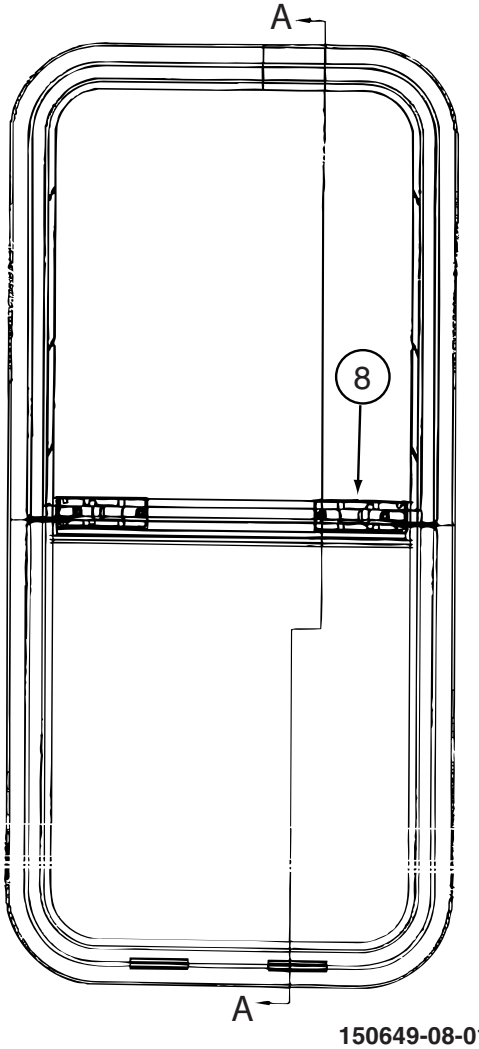

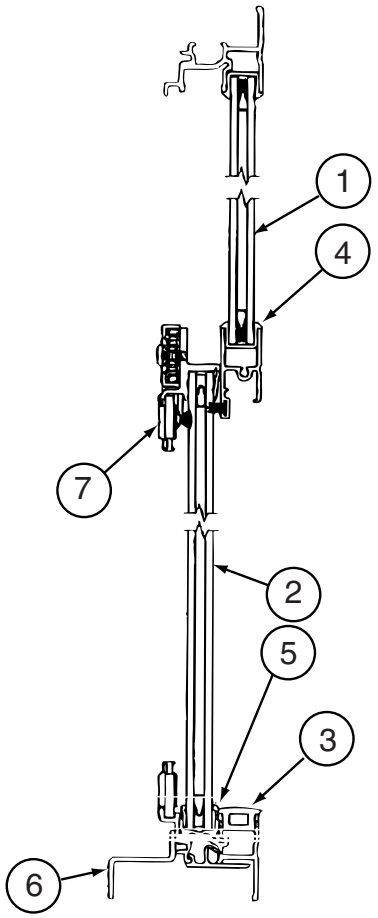

CROSS SECTION A-A

150649-08-01A

KEY	PART NUMBER	U/M	DESCRIPTION	VENDOR NO
1	150649-08-700	EA	GLASS - STATIONARY	390-035202
2	150649-08-701	EA	GLASS-SLIDING W/PULL & LATCH	FH3029G8
3	150648-01-703	EA	PLUG - FILLER	132-030308
4	112795-01-705	FT	VINYL-GLAZING	132-027331
5	151069-01-700	EA	FIN CHANNEL-RUN, SLIDING	122-030627
6	150649-08-702	EA	RETAINER - TRIM	H754-67
7	150649-07-701	EA	SCREEN ASM	410-035475
8	150649-01-700	EA	LATCH KIT - F/VERTICAL SLIDE - BLACK	FH3016-CK

150649-18-01A

KEY	PART NUMBER	U/M	DESCRIPTION	VENDOR NO
1	112898-23-700	EA	GLASS - STATIONARY	390-028351
2	150649-09-700	EA	GLASS-SLIDING W/SASH & LATCH	FH3053G8
3	150648-01-703	EA	PLUG - FILLER	132-030308
4	112795-01-705	FT	VINYL-GLAZING	132-027331
5	151069-01-700	EA	FIN CHANNEL-RUN, SLIDING	122-030627
6	150649-18-700	EA	RETAINER - TRIM	H446-61
7	150649-09-701	EA	SCREEN ASM	410-035632
8	150649-01-700	EA	LATCH-VERTICLE SLIDE-BLK	FH3016-CK

150649-19-01A

KEY	PART NUMBER	U/M	DESCRIPTION	VENDOR NO
1	112898-26-700		GLASS - STATIONARY	390-028343
2	150649-10-700		GLASS-SLIDING W/PULL & LATCH	FH3019G8
3	150648-01-703	EA	PLUG - FILLER	132-030308
4	112795-01-705	FT	VINYL-GLAZING	132-027331
5	151069-01-700	EA	FIN CHANNEL-RUN, SLIDING	122-030627
6	150649-19-700	EA	RETAINER - TRIM	H332-61
7	150649-10-701	EA	SCREEN ASM	410-035465
8	150649-01-700	EA	LATCH-VERTICLE SLIDE-BLK	FH3016-CK

COPYRIGHT © 2006 WINNEBAGO INDUSTRIES INC.

WINDOW & VENTS GROUP (CONTINUED)

COMPONENT PARTS FOR WINDOW & VENT LAYOUT (CONTINUED)

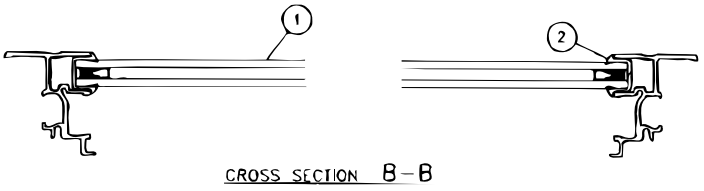

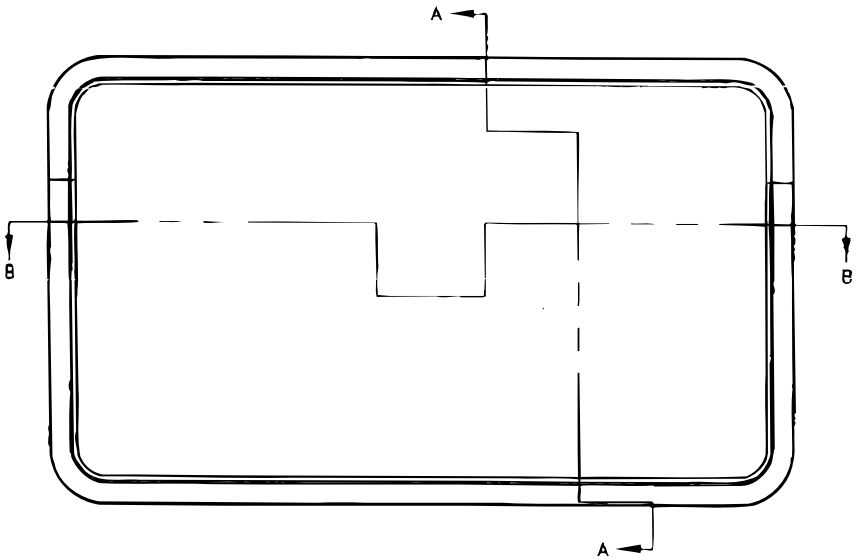

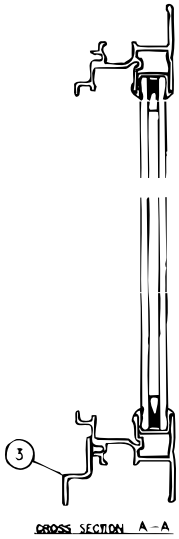

150651-07-01A

KEY	PART NUMBER	U/M	DESCRIPTION	VENDOR NO
1	150651-07-700	EA	GLASS - STATIONARY	390-036022
2	150651-07-701	EA	RETAINER - TRIM	H3074-67
3	112795-01-705	FT	VINYL - GLAZING	132-027331

COPYRIGHT © 2006 WINNEBAGO INDUSTRIES INC.

WINDOW & VENTS GROUP (CONTINUED)

COMPONENT PARTS FOR WINDOW & VENT LAYOUT (CONTINUED)

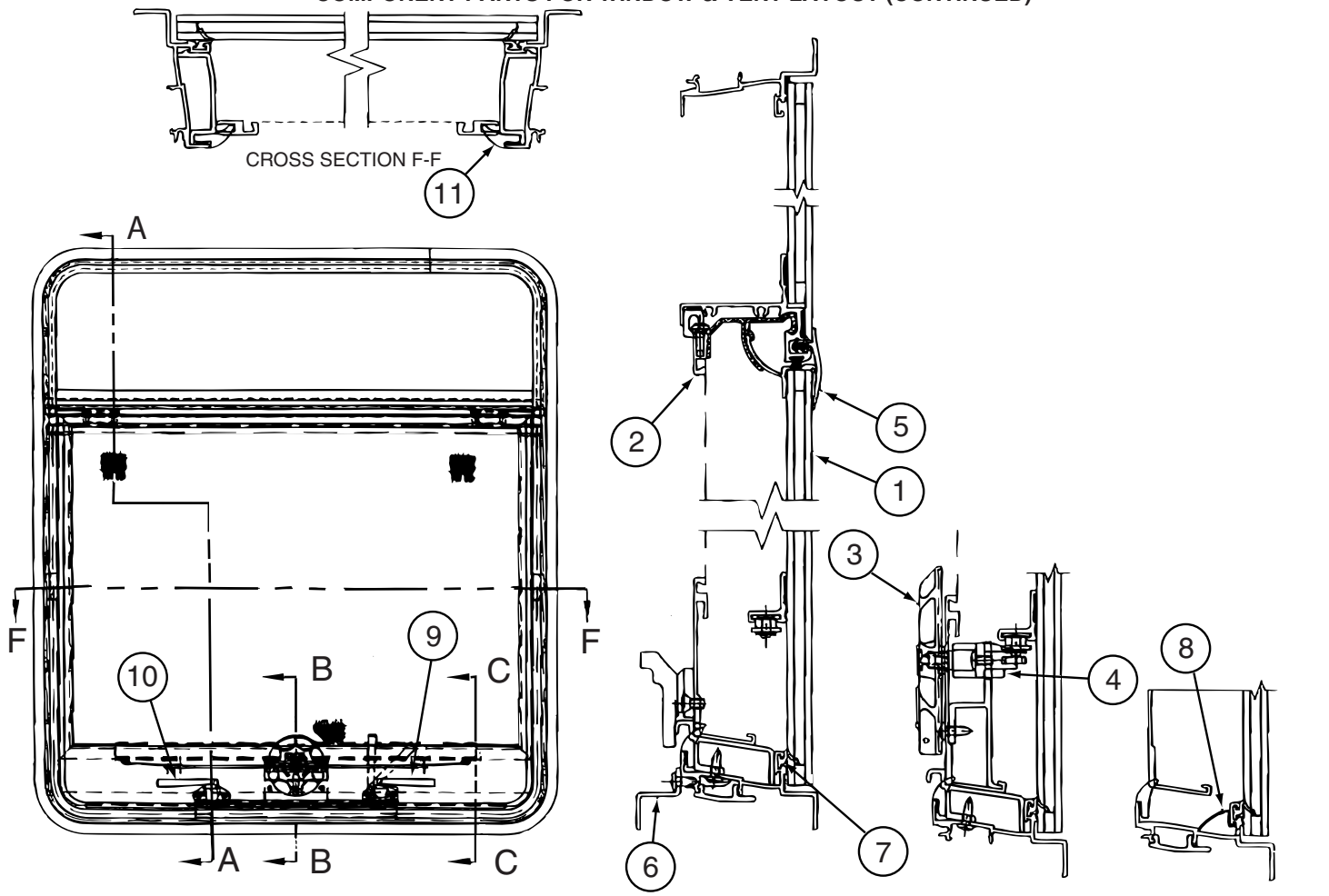

150656-02-01A

KEY	PART NUMBER	U/M	DESCRIPTION	VENDOR NO
1	150656-02-701	EA	GLASS-TIPOUT - W/HINGE/RAIL	DTH3017G8
2	150656-07-700	EA	SCREEN ASM	DTH3045-06
3	150656-02-702	EA	HANDLE-DIAL	410-016081E
4	150656-08-701	EA	OPERATOR - TIPOUT/LARGE	410-036141
5	150656-08-700	EA	SEAL/DUAL - WINDOW - 100"	132-030725
6	150656-01-701	EA	RETAINER - TRIM	DTH3017-56
7	100322-01-701	FT	SEAL-VENT	122-016071
8	150651-03-702	EA	COVER - DRAIN SLOT	132-030723
9	112898-06-707	EA	HANDLE/RH-EGRESS(SLD)ESC-RED	182-025911
10	112898-06-708	EA	HANDLE/LH-EGRESS(SLD)ESC-RED	182-025912
11	150656-09-700	FT	SEAL/SPONGE FOAM-SCREEN/FRME	140-035542

COPYRIGHT © 2006 WINNEBAGO INDUSTRIES INC.

WINDOW & VENTS GROUP (CONTINUED)

COMPONENT PARTS FOR WINDOW & VENT LAYOUT (CONTINUED)

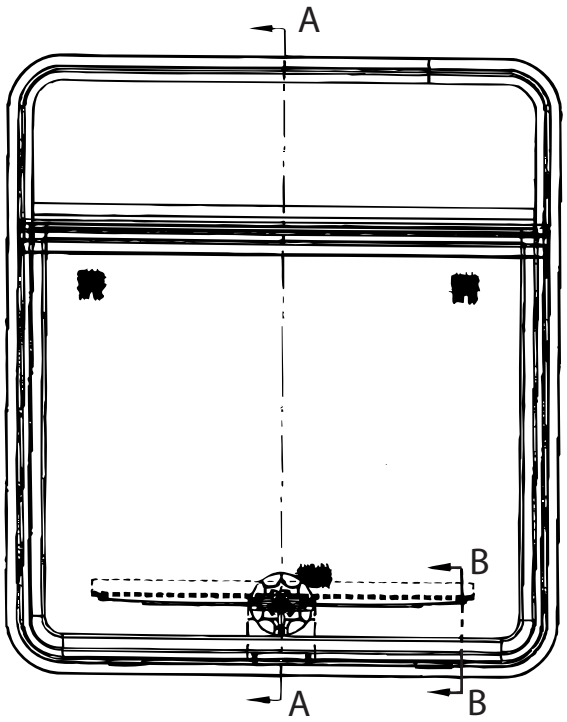

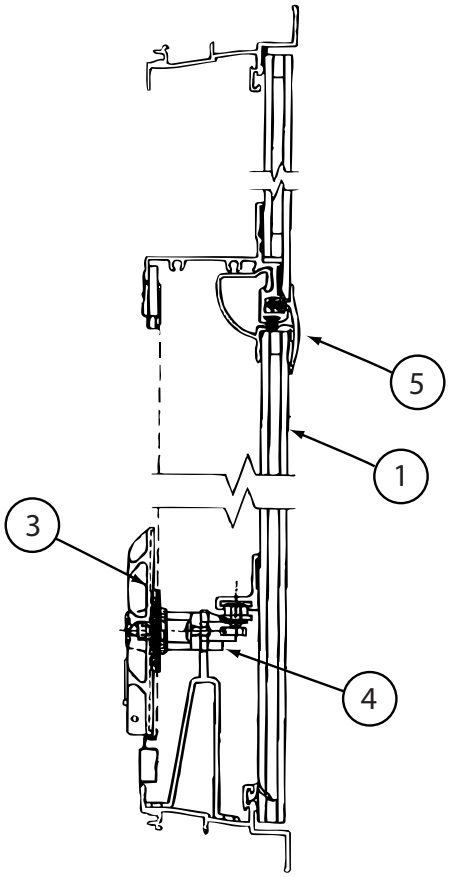

CROSS SECTION A-A

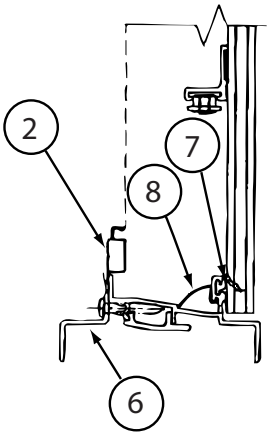

CROSS SECTION B-B

150656-05-01A

KEY	PART NUMBER	U/M	DESCRIPTION	VENDOR NO
1	150656-05-700	EA	GLASS-TIPOUT ASM	DTH3043G8
2	150656-05-701	EA	SCREEN ASM	410-035640
3	150656-02-702	EA	HANDLE-DIAL	410-016081E
4	150656-08-701	EA	OPERATOR - TIPOUT/LARGE	410-036141
5	150656-08-700	EA	SEAL/DUAL - WINDOW - 100"	132-030725
6	150656-05-702	EA	RETAINER - TRIM	DTH035-56
7	100322-01-701	EA	SEAL-VENT	122-016071
8	150651-03-702	EA	COVER - DRAIN SLOT	132-030723

150656-10-01A

KEY	PART NUMBER	U/M	DESCRIPTION	VENDOR NO
1	150656-10-700	EA	GLASS-TIPOUT W/GUIDE RAIL	DTH3042G8
2	150656-10-702	EA	SCREEN ASM	410-035639
3	150656-02-702	EA	HANDLE-DIAL	410-016081E
4	150656-01-701	EA	OPERATOR - TIPOUT/SMALL	410-036142
5	150656-08-700	EA	SEAL/DUAL - WINDOW - 100"	132-030725
6	150656-10-703	EA	RETAINER - TRIM	DTH3042-56
7	100322-01-701	FT	SEAL-VENT	122-016071
8	150651-03-702	EA	COVER - DRAIN SLOT	132-030723

COPYRIGHT © 2006 WINNEBAGO INDUSTRIES INC.

WINDOW & VENTS GROUP (CONTINUED)

COMPONENT PARTS FOR WINDOW & VENT LAYOUT (CONTINUED)

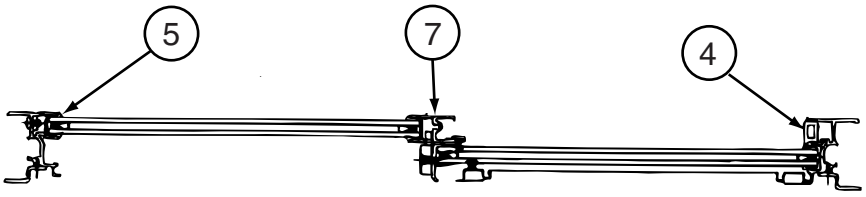

CROSS SECTION B-B

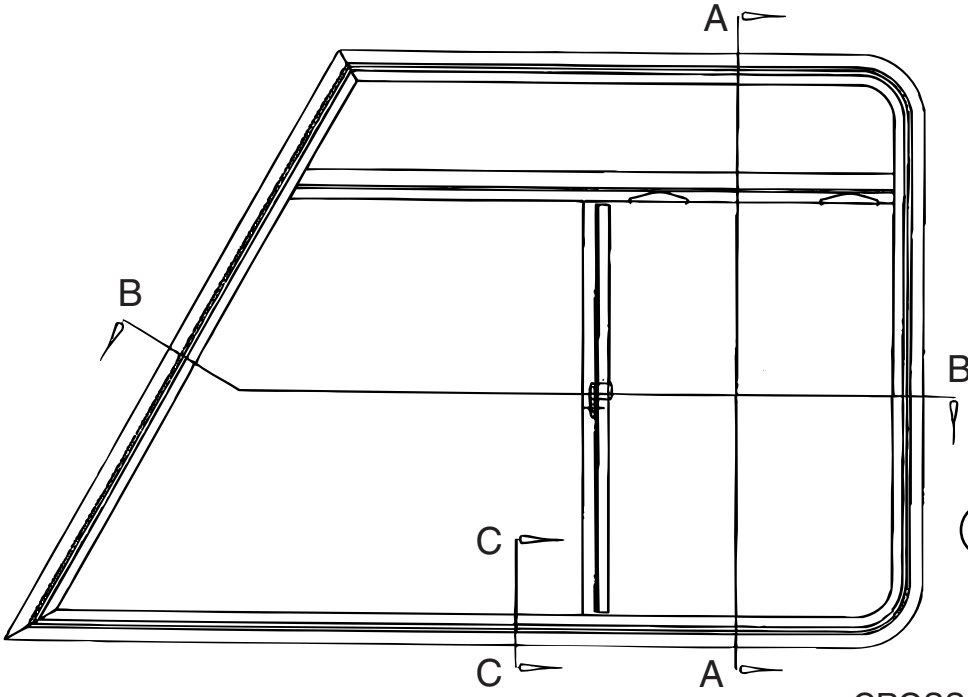

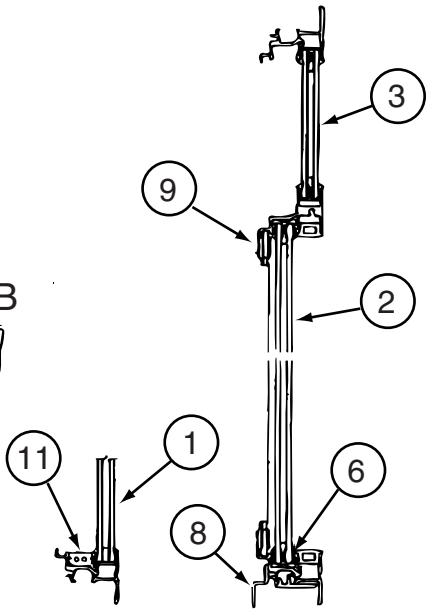

CROSS SECTION C-C

CROSS SECTION A-A

151072-01-01A

KEY	PART NUMBER	U/M	DESCRIPTION	VENDOR NO
1	125583-01-702	EA	GLASS - STATIONARY - R.H.	390-026101
2	151072-01-701	EA	GLASS-SLIDING W/SASH & LATCH	FH3040A9R
3	151072-01-702	EA	GLASS - STATIONARY - UPPER	390-036521
4	150648-01-703	FT	PLUG - FILLER	132-030308
5	151069-03-705	EA	VINYL GLAZING - F/STATIONARY	DH567-12 MITER/WELD
5	151069-03-706	EA	VINYL GLAZING - F/STATIONARY	DH373-12 MITER/WELD
6	151069-01-700	EA	CHANNEL-RUN, SLIDING	122-030627
7	098644-01-706	FT	WEATHERSTRIP - GLASS	171-010668
8	151072-01-703	EA	RETAINER-TRIM - 1 OF 2 PCE	H573K67RA
8	151072-01-704	EA	RETAINER-TRIM - 1 OF 2 PCE	H573K67RB
9	151072-01-700	EA	SCREEN ASM	410-035507
10	150648-01-700	EA	LATCH-HORIZONTAL SLIDE-BLK	FH3000-CK
11	112795-01-701	EA	SLIDE-STOP	132-019092
			CONTACT WINNEBAGO PARTS SALES FOR FOR UNLISTED COMPONENTS	

COPYRIGHT © 2006 WINNEBAGO INDUSTRIES INC.

WINDOW & VENTS GROUP (CONTINUED)

COMPONENT PARTS FOR WINDOW & VENT LAYOUT (CONTINUED)

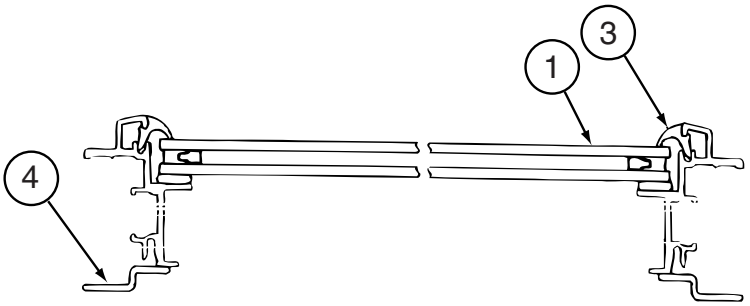

CROSS SECTION B-B

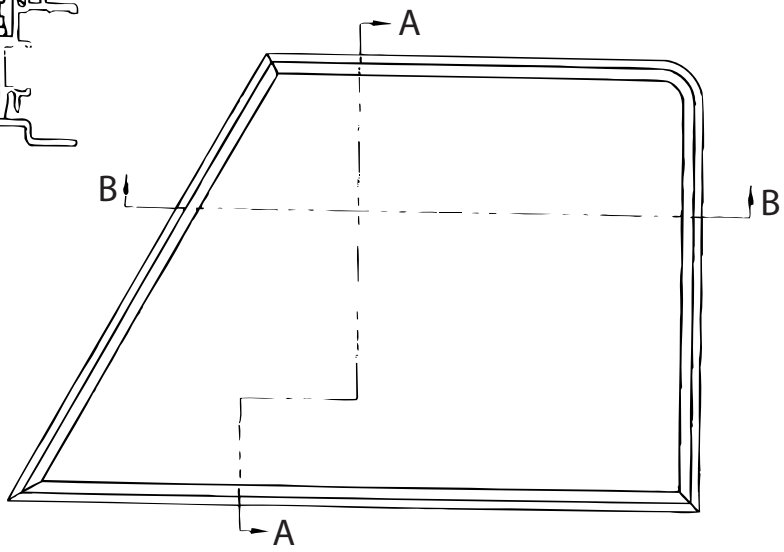

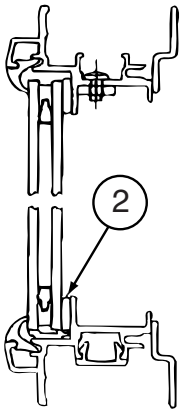

CROSS SECTION A-A

151073-01-01A

KEY	PART NUMBER	U/M	DESCRIPTION	VENDOR NO
1	125585-01-700	EA	GLASS - STATIONARY	390026092
2	115630-01-705	EA	TAPE - BUTYL	154-011956
3	151073-01-700	EA	VINYL BUTYL-MITERED/FORMED	FH56912
4	151073-01-701	EA	RETAINER - TRIM	H569K67L

151074-01-01A

KEY	PART NUMBER	U/M	DESCRIPTION	VENDOR NO
1	151074-01-700	EA	GLASS - STATIONARY	390-028331
2	115630-01-705	FT	TAPE - BUTYL	154-011956
3	151074-01-701	EA	VINYL GLAZING-MITERED/FORMED	FH570-12
4	151074-01-702	EA	RETAINER - TRIM	H570K67L

COPYRIGHT © 2006 WINNEBAGO INDUSTRIES INC.

WINDSHIELD & WIPER GROUP

WINDSHIELD

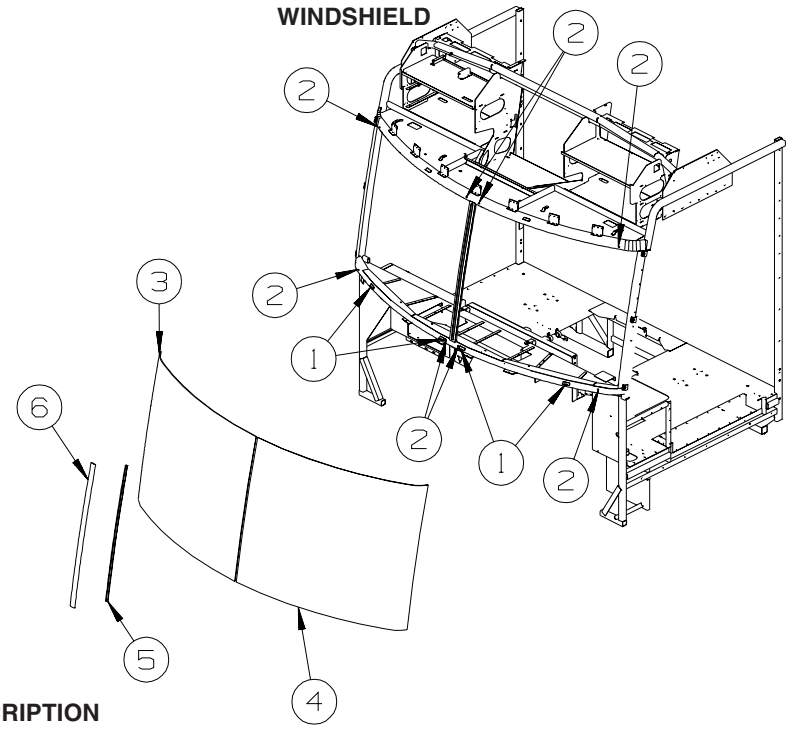

KEY	PART NUMBER	U/M	DESCRIPTION
1	002328-02-000	EA	BLOCK - WINDSHIELD - .062" X .5" X .98"
2	081914-02-000	EA	BUMPER - RUBBER - ROUND - 5/16” DIA. X 13/64” THICK
3	124328-01-000	EA	WINDSHIELD - PASSENGER - 52" X 41" (CURVED)
4	124328-02-000	EA	WINDSHIELD - DRIVER - 52" X 41" (CURVED)
5	127862-09-000	EA	CARRIER/REVEAL - WINDSHIELD - 38.6"
6	120533-01-000	FT	MOLDING - REVEAL - WINDSHIELD

COPYRIGHT © 2006 WINNEBAGO INDUSTRIES INC.

WINDSHIELD & WIPER GROUP (CONTINUED)

WIPER

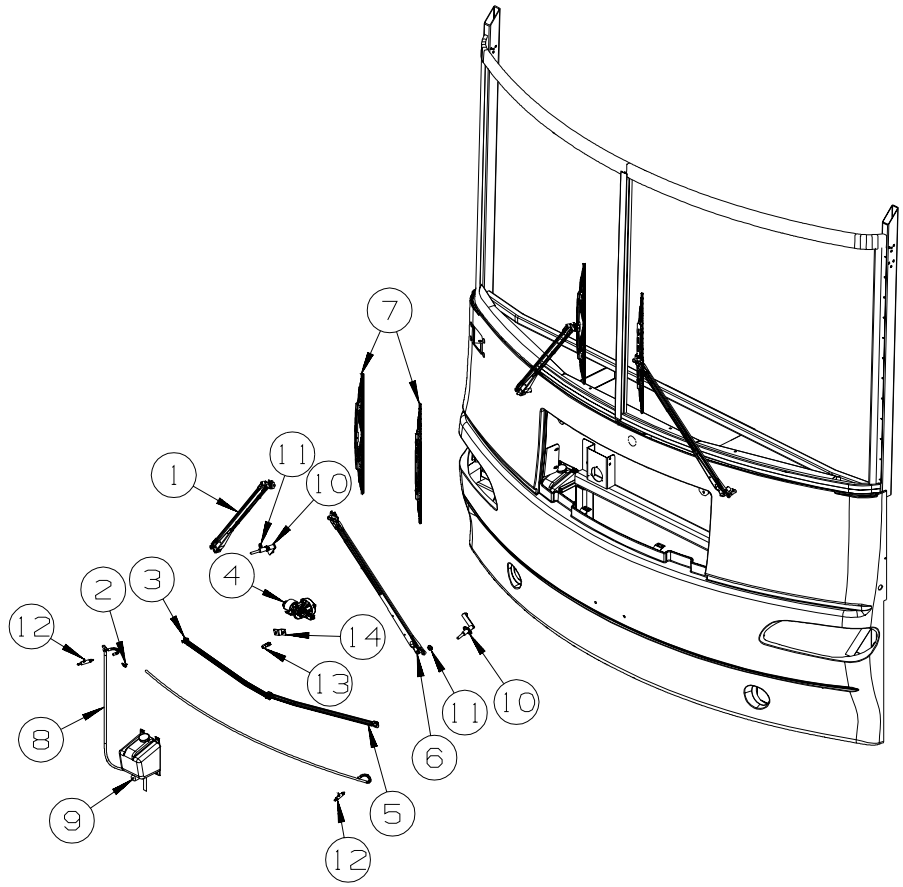

KEY	PART NUMBER	U/M	DESCRIPTION
1*	149402-03-000	EA	ARM - WINDSHIELD WIPER/PANTOGRAPH - RIGHT HAND - 28"
2	146486-01-000	EA	TEE - PLASTIC - 5/32" X 5/32" X 5/32" - ON LEFT SIDE OF WORKHORSE CHASSIS
3	149403-01-000	EA	LINK/CONNECTING-WINDSHIELD WIPER - CLOSED/CLOSED - 24"
4	149409-01-000	EA	MOTOR - WIPER - DYNAMIC PARK
4	149409-02-000	EA	MOTOR - WIPER - COAST TO PARK - WORKHORSE P32 (15,000/18,000) CHASSIS
5	149403-02-000	EA	LINK/CONNECTING-WINDSHIELD WIPER - OPEN/CLOSED GROMMET-24"
6*	149402-04-000	EA	ARM - WINDSHIELD WIPER/PANTOGRAPH - LEFT HAND - 28"
7	149399-01-000	EA	BLADE - WINDSHIELD WIPER - 24"
8	045794-01-000	FT	HOSE - WINDSHIELD WASHER - 5/32"ID - BLACK - ON LEFT SIDE OF WORKHORSE CHASSIS
9	117766-02-000	EA	RESERVOIR/PUMP - WINDSHIELD WASHER - ON LEFT SIDE OF WORKHORSE CHASSIS
10*	149401-02-000	EA	SHAFT/PIVOT - WINDSHIELD WIPER - 4.1" OVERALL
11	110742-03-000	EA	GASKET - WIPER
12	145698-01-01A	EA	SHAFT/IDLER - PANTOGRAPH - W/WASHER DIVERTER - STAINLESS
13	149395-01-000	EA	STUD/DOUBLE BALL CRANK - WIPER MOTOR
14	149408-01-000	EA	ARM - DRIVE/WIPER MOTOR

***COMPONENT PARTS LISTED LATER IN THIS GROUP**

COMPONENT PARTS FOR WIPER

149401-01-000,149401-02-000

KEY	PART NUMBER	U/M	DESCRIPTION	VENDOR NO.
	096505-02-703	EA	NUT/ACORN - HD W/.687 BRL	51065-40-NT27WC
	149401-01-700	EA	HARDWARE PKG - F/SHAFT&PIVOT	PSHWKIT
	149401-01-701	EA	SEAL CAP/RUBBER GROMMET	300749

149402-01-000 & 149402-02-000

KEY	PART NUMBER	U/M	DESCRIPTION	VENDOR NO.
	096931-01-705	EA	CAP-PLASTIC	52699-40-CP27WC
	149402-01-700	EA	WASHER NOZZLE KIT - W/HDWR	5219140
	149402-01-701	EA	COVER - SHAFT & PIVOT END	300809

149402-03-000 & 149402-04-000

KEY	PART NUMBER	U/M	DESCRIPTION	VENDOR NO.
	149402-03-700	EA	WASHER NOZZLE KIT W/HDWR	19476
	149402-03-701	EA	COVER/CAP - BLACK	200342

COPYRIGHT © 2006 WINNEBAGO INDUSTRIES INC.