2006
CAMBRIA
IF729H
700-SERIES

WASHED MAPLE

T47 MANGO TWIST
T49 MIGHT MIST
T51 ESPRESSO

SIERRA MAPLE

T48 MANGO TWIST
T50 NIGHT MIST
T52 ESPRESSO

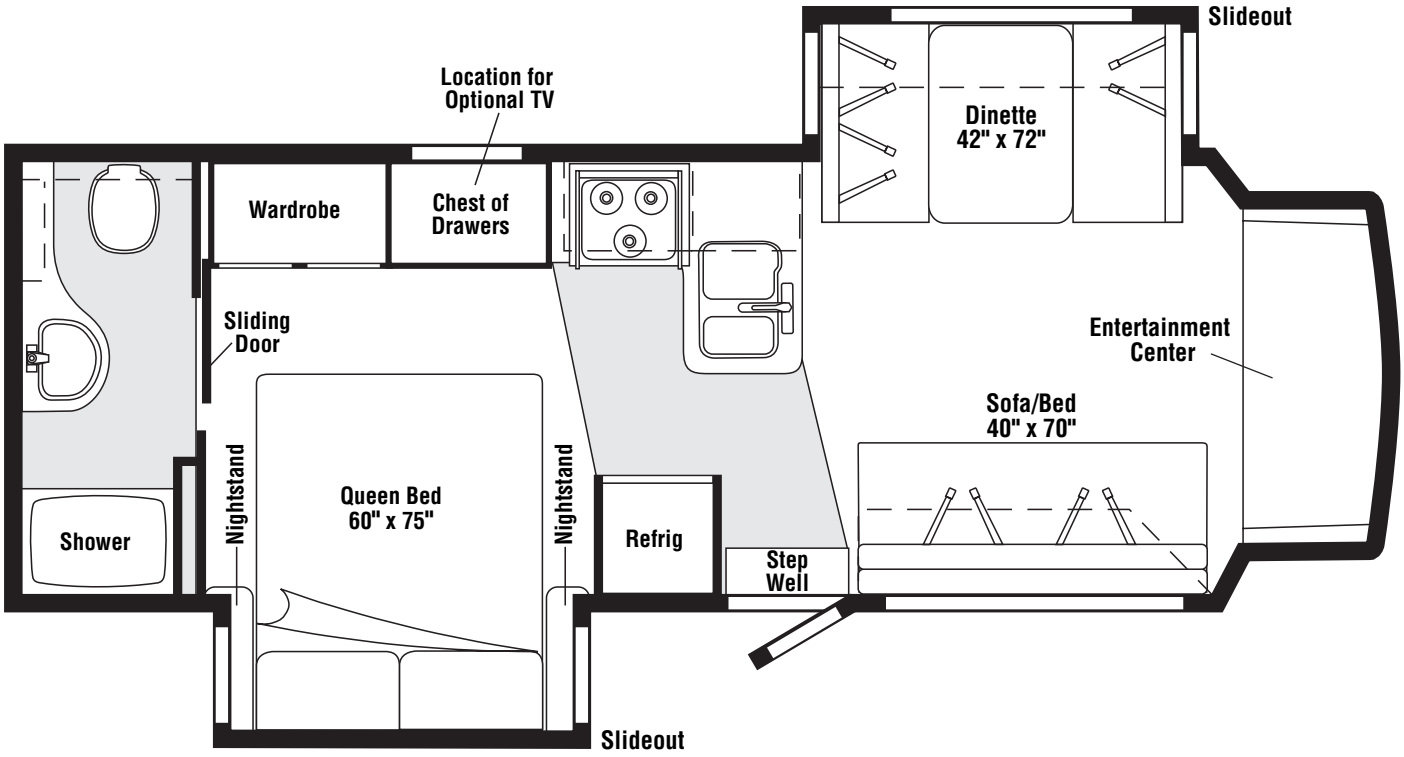

FLOORPLANS

COPYRIGHT © 2006 WINNEBAGO INDUSTRIES INC.

CONTENTS

FLOORPLANS 1
ACCESSORIES GROUP 6
OPERATORS MANUAL 6
AUDIO VIDEO GROUP 7
RADIO SYSTEM 7
REAR MONITOR 7
CABINET & APPLIANCE GROUP 8
CABINET & APPLIANCE LAYOUT 8
COMPONENT PARTS FOR CABINET & APPLIANCE LAYOUT 16
114030-04-01A 16
121568-06-01A, 121568-07-01A, 121568-08-01A 18
136354-05-01A, 136354-05-02A 22
136354-06-01A, 136354-06-02A 23
150606-04-01A, 150606-04-02A 23
151277-01-01A, 151277-02-01A 24
CHASSIS GROUP 26
FRAME 26
DRIVETRAIN 26
EXHAUST 27
HITCH 29
FUEL 29
SPARE TIRE 30
COMPONENT PARTS FOR SPARE TIRE 30
149703-01-01A 30
SUSPENSION 30
COMPONENT PARTS FOR SUSPENSION 30
153119-01-000 30
153119-02-000 30
WHEEL, TIRE, COVERS &/OR LINERS 31
COMPONENT PARTS FOR WHEEL, TIRE, COVERS &/OR LINERS 31
110435-13-000 31
BRAKELINE 31
CURTAIN & CUSHION GROUP 32
NOTICE 32
CUSHION LAYOUT 33
BUCKET SEATS 35
SOFA 37
WINDOW TREATMENT 38
HARDWARE 40
ACCESSORIES 42
FABRICS 43
DRIVERS COMPARTMENT GROUP 45
FRONT INTERIOR 45
CABINETS 47

COPYRIGHT © 2006 WINNEBAGO INDUSTRIES INC.

CONTENTS (CONTINUED)

ELECTRICAL GROUP 49
110V BODY WIRING 49
12V BODY WIRING 51
EXTERIOR LAMPS 56
FRONT END 57
FRONT TV/VCR 58
COMPONENT PARTS FOR WIRING 59
076319-23-000 59
076319-25-000 59
087694-01-000 60
097917-01-06A 60
113589-01-000 60
120269-07-01A 60
121935-01-01A 60
123775-01-01A 60
133908-09-01A 60
134940-06-01A 61
134940-07-01A 61
137135-02-000 62
137417-02-01A 63
137417-06-01A 63
146299-02-000 63
148231-01-000 63
149925-01-000 63
150032-01-000 63
151907-01-000 63
151907-02-000 63
155619-01-000 63
156130-01-000 63
158778-01-000 63
CIRCUIT BREAKERS, FUSES & RELAYS 64
CONVERTER, INVERTER, LOAD CENTERS 64
COMPONENT PARTS FOR CONVERTER, INVERTER, LOAD CENTERS 65
083208-06-000 65
083208-07-000 65
BOXES & CORDS 66
WIRE ASSEMBLIES 66
CONNECTORS & CONDUIT 67
CHASSIS 69
EXTERIOR BODY GROUP 71
GRAPHICS & PAINT 71
PANELS & TRIMS 73
COMPONENT PARTS FOR PANELS & TRIMS 76
133908-14 & 133908-15-01A/02A 76
133908-01 THRU 133908-08, 133908-10 THRU 133908-13, 133908-16, 133908-17, -01A/-02A/-03A 76
FRONT END 77
LADDER 77
STRUCTURAL COMPONENTS 78
AWNINGS 78
EXTERIOR DOORS & COMPARTMENTS GROUP 79
DOOR & COMPARTMENT LAYOUT 79
084103-08-000 83
094708-03-01A 83
094708-05-01A 84
COMPARTMENT DOOR PIECE PARTS 85
COMPONENT PARTS FOR COMPARTMENT DOOR PIECE PARTS 86
110506-A1-000, 110506-A2-000, 110506-26-000, 110506-27-000, 110506-36-000 86
ENTRY 87
SCREEN 88
LATCH - ENTRY 89

COPYRIGHT © 2006 WINNEBAGO INDUSTRIES INC.

CONTENTS (CONTINUED)

EXTERIOR SLIDEOUT GROUP 90
FRONT LEFT 90
COMPONENT PARTS FOR FRONT LEFT 93
148685-01-000 93
REAR 94
GENERATOR GROUP 98
GAS 98
HEATING & A/C GROUP 99
FURNACE 99
COMPONENT PARTS FOR FURNACE 100
139980-01-000 100
139980-02-000 102
ROOF 104
COMPONENT PARTS FOR ROOF 104
131184-01-01A 104
131184-05-01A 105
148644-01-01A 106
148644-02-01A 107
INTERIOR FINISH GROUP 108
MOLDINGS & TRIMS 108
PANELING & LAMINATES 117
INTERIOR TRIM LAYOUT 118
COMPONENT PART FOR INTERIOR TRIM LAYOUT 120
094499-02-000 120
FLOOR COVERINGS 120
HARDWARE 121
LABELS GROUP 127
LP GROUP 132
LP SYSTEM 132
COMPONENT PARTS FOR LP SYSTEM 132
144116-09-000 132
SEALANTS & FASTENERS GROUP 133
SEALANTS & ADHESIVES 133
BOLTS, NUTS AND WASHERS 134
SCREWS 136
CLAMPS, CLIPS, GROMMETS, RIVETS & PLUGS 138
MISCELLANEOUS FASTENERS 140
WATER & SEWAGE GROUP 141
DRAINAGE SYSTEM 141
COMPONENT PARTS FOR DRAINAGE SYSTEM 143
096927-01-02A 143
147421-01-01A, 147421-02-01A 143
WATER SYSTEM 144
COMPONENT PARTS FOR WATER SYSTEM 150
051391-03-000 150
075241-04-000, 075241-05-000, 075241-06-000 151
098607-01-000 151

COPYRIGHT © 2006 WINNEBAGO INDUSTRIES INC.

CONTENTS (CONTINUED)

WINDOW & VENTS GROUP 152
WINDOW & VENT LAYOUT 152
COMPONENT PARTS FOR WINDOW & VENT LAYOUT 153
098644-13-01A 153
098647-23-02A 154
098647-47-02A 155
112463-02-02A 155
122882-01-01A 156
122882-02-01A, 122882-03-01A 156
123780-03-01A 157
150648-03-01A 158
150648-07-01A 158
150649-07-01A 159
150651-01-01A 160
150656-11-01A 161

COPYRIGHT © 2006 WINNEBAGO INDUSTRIES INC.

ACCESSORIES GROUP

OPERATORS MANUAL

KEY	PART NUMBER	U/M	DESCRIPTION
	129079-01-01A	EA	CASE - VINYL/BLACK-EXPANDABLE ACCORDION SIDES-7"WX9"HX14"L
	132000-27-006	EA	MANUAL/OWNER - CAMBRIA - 2006
	155005-27-006	EA	MANUAL/OWNER - SUPPLEMENT - CAMBRIA - 2006
	154591-01-000	DW	TOP LEVEL-700,2006

COPYRIGHT © 2006 WINNEBAGO INDUSTRIES INC.

AUDIO VIDEO GROUP

RADIO SYSTEM

KEY	PART NUMBER	U/M	DESCRIPTION
	135420-05-000	EA	RADIO - MOUNTING KIT - FORD
	135420-10-000	EA	REMOTE CONTROL/RADIO (CREDIT CARD SIZE) FROM: 00-00-00 THRU: 05-29-05
	135420-19-000	EA	REMOTE CONTROL/RADIO (CREDIT CARD SIZE) FROM: 05-30-05 THRU: 99-99-99
	135420-11-000	EA	REMOTE CONTROL/RADIO (STEERING WHEEL MOUNT) FROM: 00-00-00 THRU: 06-01-05
	135420-18-000	EA	REMOTE CONTROL/RADIO (STEERING WHEEL MOUNT) FROM: 06-02-05 THRU: 99-99-99
	135420-13-000	EA	RADIO-AM/FM/CASS/CD COMBO-AUX/CD CHANGER INPUT-W/O REMOTE FROM: 00-00-00 THRU: 05-29-05
	135420-15-000	EA	RADIO-AM/FM/CD/SIRIUS SATELLITE READY-W/O REMOTES/WIRE ASM FROM: 05-30-05 THRU: 99-99-99
	135420-14-000	EA	RECEIVER - INFRARED
	152780-01-000	EA	ANTENNA/SATELLITE - RADIO/SIRIUS - SATELLITE RADIO FROM: 00-00-00 THRU: 12-11-05
	158494-01-000	EA	ANTENNA/SATELLITE - RADIO/SIRIUS - SATELLITE RADIO FROM: 12-12-05 THRU: 99-99-99
	152780-02-000	EA	CABLE/ANTENNA - SATELLITE RADIO SIRRUS - SATELLITE RADIO FROM: 00-00-05 THRU: 12-11-05
	158494-02-000	EA	CABLE/ANTENNA - SATELLITE RADIO SIRRUS - SATELLITE RADIO FROM: 12-12-05 THRU: 99-99-99
	135420-20-000	EA	RECEIVER - SATELLITE RADIO
	108137-01-000	EA	PLUG - ANTENNA

REAR MONITOR

KEY	PART NUMBER	U/M	DESCRIPTION
	149227-01-02B	EA	BRACKET - CAMERA - E-COATED
	149237-01-01A	EA	SHROUD - CAMERA/OUTER - BRIGHT WHITE
	144677-04-000	EA	CAMERA - REAR VIEW W/BRACKET - BLACK & WHITE - VBCS150
	150079-02-000	EA	MONITOR/LCD - 5.6" - NO AUDIO - SUNVISOR MOUNT (FORD) - 2004 FORD CHASSIS ONLY
	156442-01-01A	EA	MONITOR/LCD - 5.6" - NO AUDIO - PLASTIC POD MOUNT - TAN - 2006 FORD CHASSIS ONLY

COPYRIGHT © 2006 WINNEBAGO INDUSTRIES INC.

CABINET & APPLIANCE GROUP

CABINET & APPLIANCE LAYOUT

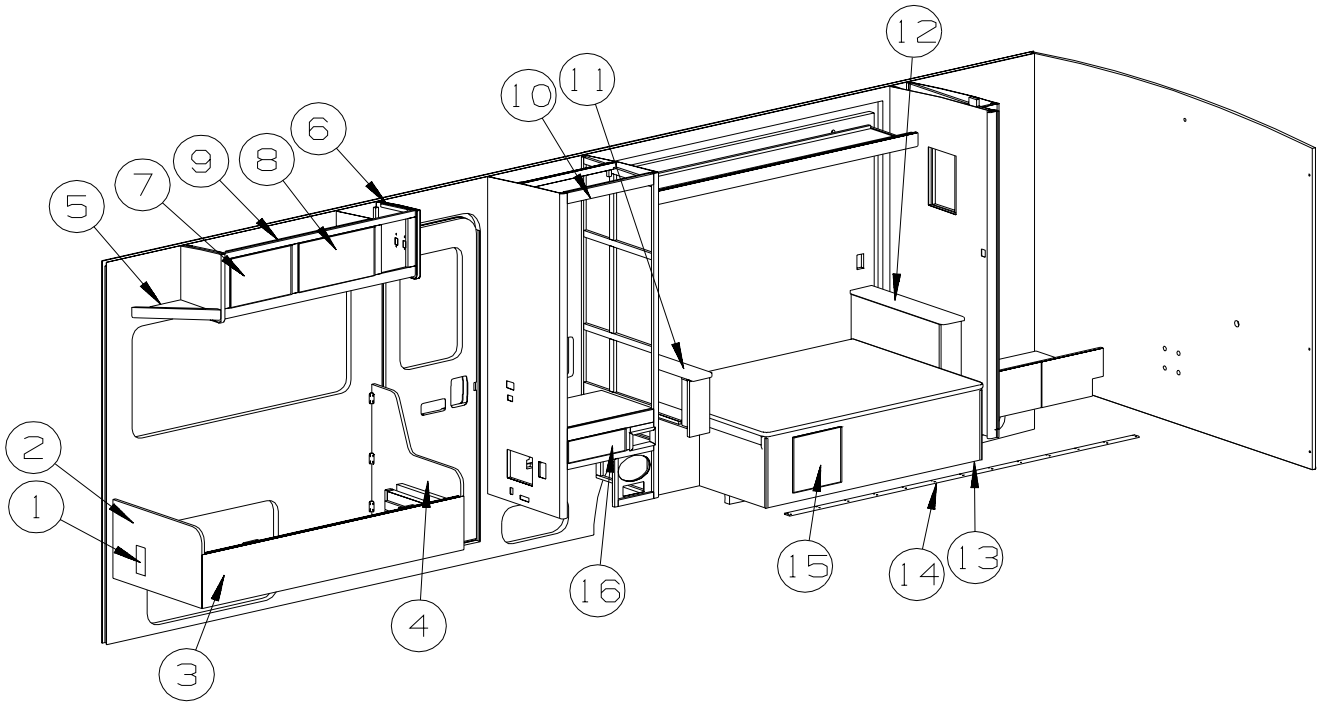

KEY	PART NUMBER	U/M	DESCRIPTION
1	137602-K4-T41	EA	POCKET - FIRE EXTINGUISHER - WASHED MAPLE
1	137602-K4-T42	EA	POCKET - FIRE EXTINGUISHER - SIERRA MAPLE
2	148296-11-T47	EA	CABINET - COUCH END - RIGHT END PANEL - FABRIC COVERED (T47, T48)
2	148296-11-T49	EA	CABINET - COUCH END - RIGHT END PANEL - FABRIC COVERED (T49, T50)
2	148296-11-S44	EA	CABINET - COUCH END - RIGHT END PANEL - FABRIC COVERED (T51, T52)
2	148296-17-T41	EA	CABINET - COUCH END - RT END PANEL - LEATHER COVERED (T47, T48) - ULTRALEATHER
2	148296-17-T43	EA	CABINET - COUCH END - RT END PANEL - LEATHER COVERED (T49, T50, T51, T52) - ULTRALEATHER
3	148296-15-T47	EA	CABINET - COUCH - FRONT - FABRIC COVERED (T47, T48)
3	148296-15-T49	EA	CABINET - COUCH - FRONT - FABRIC COVERED (T49, T50)
3	148296-15-S44	EA	CABINET - COUCH - FRONT - FABRIC COVERED (T51, T52)
3	148296-19-T41	EA	CABINET - COUCH - FRONT - LEATHER COVERED (T47, T48) - ULTRALEATHER
3	148296-19-T43	EA	CABINET - COUCH - FRONT - LEATHER COVERED (T49, T50, T51, T52) - ULTRALEATHER
4	148296-13-T47	EA	CABINET - COUCH END - LEFT END PANEL - FABRIC COVERED (T47, T48)
4	148296-13-T49	EA	CABINET - COUCH END - LEFT END PANEL - FABRIC COVERED (T49, T50)
4	148296-13-T51	EA	CABINET - COUCH END - LEFT END PANEL - FABRIC COVERED (T51, T52)
4	148296-18-T41	EA	CABINET - COUCH END - LT END PANEL - LEATHER COVERED (T47,T48) - ULTRALEATHER
4	148296-18-T43	EA	CABINET - COUCH END - LT END PANEL - LEATHER COVERED (T49, T50, T51, T52) - ULTRALEATHER
5	148764-01-S34	EA	CABINET/SHELF - W/O DOORS/HARDWARE - WASHED MAPLE
5	148764-01-S35	EA	CABINET/SHELF - W/O DOORS/HARDWARE - SIERRA MAPLE
6	148713-01-S34	EA	END CAP - OVERHEAD CABINET - WASHED MAPLE
6	148713-01-S35	EA	END CAP - OVERHEAD CABINET - SIERRA MAPLE
7	136955-82-S40	EA	DOOR - RAISED PANEL/PENCIL EDGE - 12.8" X 17.7" - W/O HDW - WASHED MAPLE
7	136955-82-S41	EA	DOOR - RAISED PANEL/PENCIL EDGE - 12.8" X 17.7" - W/O HDW - SIERRA MAPLE
8	136955-85-S40	EA	DOOR - RAISED PANEL/PENCIL EDGE - 12.8" X 21.9" - W/O HDW - WASHED MAPLE
8	136955-85-S41	EA	DOOR - RAISED PANEL/PENCIL EDGE - 12.8" X 21.9" - W/O HDW - SIERRA MAPLE

COPYRIGHT © 2006 WINNEBAGO INDUSTRIES INC.

CABINET & APPLIANCE GROUP (CONTINUED)

CABINET & APPLIANCE LAYOUT (CONTINUED)

KEY	PART NUMBER	U/M	DESCRIPTION
9	148726-03-T45	EA	CABINET - OVERHEAD - W/O DOORS/HARDWARE (T47) FROM: 00-00-00 THRU: 10-02-05
9	148726-04-T45	EA	CABINET - OVERHEAD - W/O DOORS/HARDWARE (T47) FROM: 10-03-05 THRU: 99-99-99
9	148726-03-T46	EA	CABINET - OVERHEAD - W/O DOORS/HARDWARE (T48) FROM: 00-00-00 THRU: 10-02-05
9	148726-04-T46	EA	CABINET - OVERHEAD - W/O DOORS/HARDWARE (T48) FROM: 10-03-05 THRU: 99-99-99
9	148726-03-T49	EA	CABINET - OVERHEAD - W/O DOORS/HARDWARE (T49) FROM: 00-00-00 THRU: 10-02-05
9	148726-04-T49	EA	CABINET - OVERHEAD - W/O DOORS/HARDWARE (T49) FROM: 10-03-05 THRU: 99-99-99
9	148726-03-T50	EA	CABINET - OVERHEAD - W/O DOORS/HARDWARE (T50) FROM: 00-00-00 THRU: 10-02-05
9	148726-04-T50	EA	CABINET - OVERHEAD - W/O DOORS/HARDWARE (T50) FROM: 10-03-05 THRU: 99-99-99
9	148726-03-T51	EA	CABINET - OVERHEAD - W/O DOORS/HARDWARE (T51) FROM: 00-00-00 THRU: 10-02-05
9	148726-04-T51	EA	CABINET - OVERHEAD - W/O DOORS/HARDWARE (T51) FROM: 10-03-05 THRU: 99-99-99
9	148726-03-T52	EA	CABINET - OVERHEAD - W/O DOORS/HARDWARE (T52) FROM: 00-00-00 THRU: 10-02-05
9	148726-04-T52	EA	CABINET - OVERHEAD - W/O DOORS/HARDWARE (T52) FROM: 10-03-05 THRU: 99-99-99
10*	121568-07-01A	EA	REFRIGERATOR - SMALL DBL DOOR-LH/2 WAY- 52.8"HX23.5"WX24"D
	116751-01-01A	EA	TRAY - REFRIGERATOR
	054450-01-000	EA	LEVEL - REFRIGERATOR
10			REFRIGERATOR CABINET SEALS
	090329-01-000	FT	SEAL - “T” - REFRIGERATOR CABINET
11	156215-02-T47	EA	CABINET - NIGHTSTAND/LH - W/O COUNTERTOP/DOORS/DRAWERS/HDW
11	156215-02-T48	EA	CABINET - NIGHTSTAND/LH - W/O COUNTERTOP/DOORS/DRAWERS/HDW
11	156215-02-T49	EA	CABINET - NIGHTSTAND/LH - W/O COUNTERTOP/DOORS/DRAWERS/HDW
11	156215-02-T50	EA	CABINET - NIGHTSTAND/LH - W/O COUNTERTOP/DOORS/DRAWERS/HDW
11	156215-02-T51	EA	CABINET - NIGHTSTAND/LH - W/O COUNTERTOP/DOORS/DRAWERS/HDW
11	156215-02-T52	EA	CABINET - NIGHTSTAND/LH - W/O COUNTERTOP/DOORS/DRAWERS/HDW
12	156215-01-T47	EA	CABINET - NIGHTSTAND/RH - W/O COUNTERTOP/DOORS/DRAWERS/HDW
12	156215-01-T48	EA	CABINET - NIGHTSTAND/RH - W/O COUNTERTOP/DOORS/DRAWERS/HDW
12	156215-01-T49	EA	CABINET - NIGHTSTAND/RH - W/O COUNTERTOP/DOORS/DRAWERS/HDW
12	156215-01-T50	EA	CABINET - NIGHTSTAND/RH - W/O COUNTERTOP/DOORS/DRAWERS/HDW
12	156215-01-T51	EA	CABINET - NIGHTSTAND/RH - W/O COUNTERTOP/DOORS/DRAWERS/HDW
12	156215-01-T52	EA	CABINET - NIGHTSTAND/RH - W/O COUNTERTOP/DOORS/DRAWERS/HDW
13	155951-01-T43	EA	CABINET - BED BASE - W/O DOORS/DRAWERS/HDW (T47)
13	155951-01-T44	EA	CABINET - BED BASE - W/O DOORS/DRAWERS/HDW (T48)
13	155951-01-T49	EA	CABINET - BED BASE - W/O DOORS/DRAWERS/HDW (T49)
13	155951-01-T50	EA	CABINET - BED BASE - W/O DOORS/DRAWERS/HDW (T50)
13	155951-01-T45	EA	CABINET - BED BASE - W/O DOORS/DRAWERS/HDW (T51)
13	155951-01-T46	EA	CABINET - BED BASE - W/O DOORS/DRAWERS/HDW (T52)
14	152641-01-000	EA	SKID/GLIDE - SLIDEOUT ROOM - 1/4"X2"X95.5"- POLYETHYLENE
15	147084-17-T47	EA	DOOR - FLAT PANEL/PENCIL EDGE - 14.4" X 14.4" - W/O HDW - WASHED MAPLE
15	147084-17-SJ3	EA	DOOR - FLAT PANEL/PENCIL EDGE - 14.4" X 14.4" - W/O HDW - SIERRA MAPLE
16	153121-T7-T34	EA	DRAWER - PENCIL EDGE - 14.7"W X 17.7"D - W/O SLIDES/HDW - WASHED MAPLE
16	153121-T7-TL3	EA	DRAWER - PENCIL EDGE - 14.7"W X 17.7"D - W/O SLIDES/HDW - SIERRA MAPLE

***COMPONENT PARTS LISTED LATER IN THIS GROUP**

COPYRIGHT © 2006 WINNEBAGO INDUSTRIES INC.

CABINET & APPLIANCE GROUP (CONTINUED)

CABINET & APPLIANCE LAYOUT (CONTINUED)

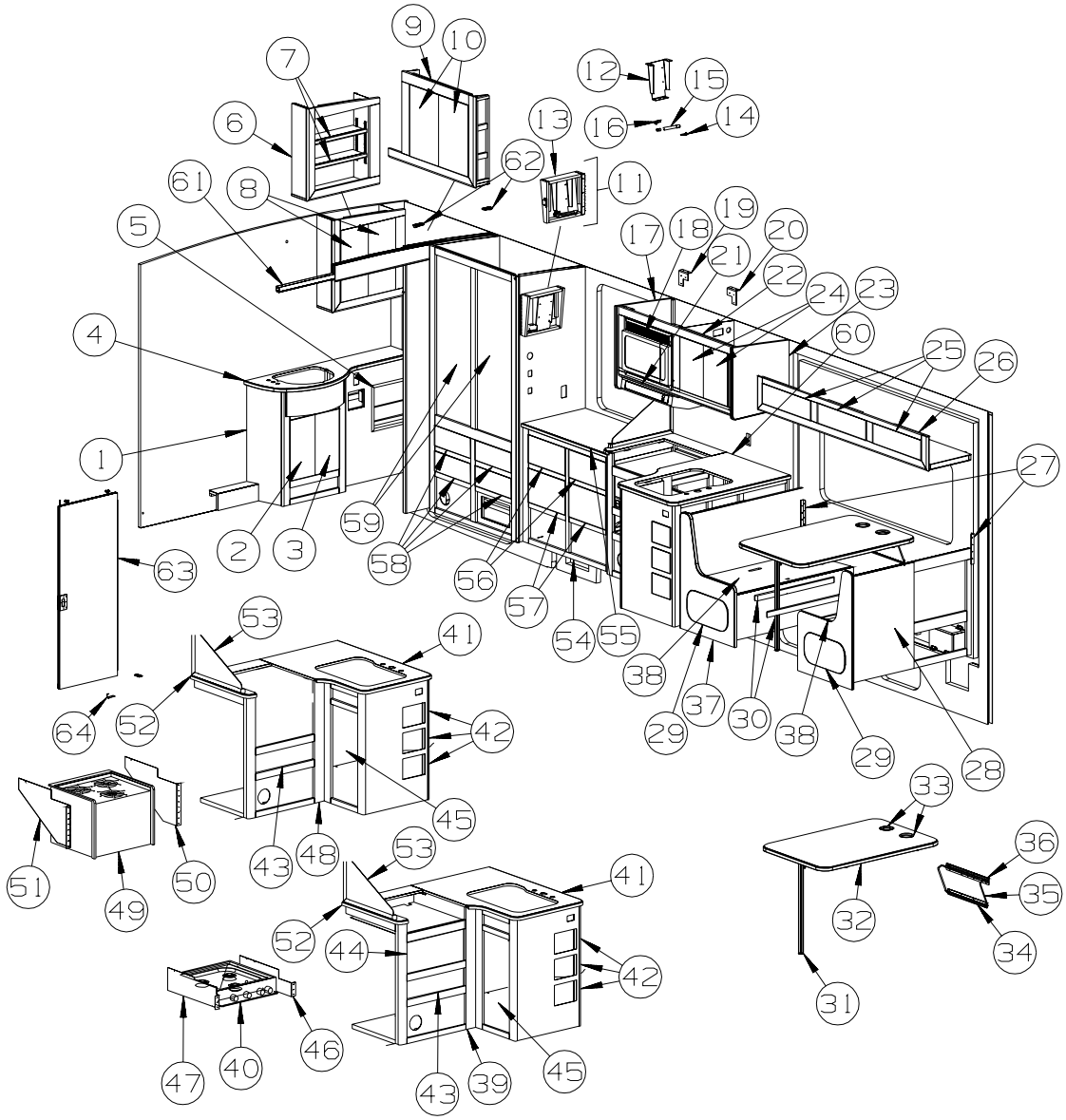

KEY	PART NUMBER	U/M	DESCRIPTION
1	155796-01-T41	EA	CABINET - LAVATORY - W/O COUNTERTOP/DOORS/DRAWERS/HDW - WASHED MAPLE
1	155796-01-T42	EA	CABINET - LAVATORY - W/O COUNTERTOP/DOORS/DRAWERS/HDW - SIERRA MAPLE
2	147084-34-T47	EA	DOOR - FLAT PANEL/PENCIL EDGE - 9.2" X 18.9" - W/O HDW - WASHED MAPLE
2	147084-34-T42	EA	DOOR - FLAT PANEL/PENCIL EDGE - 9.2" X 18.9" - W/O HDW - SIERRA MAPLE
3	147084-36-T47	EA	DOOR - FLAT PANEL/PENCIL EDGE - 9.2" X 18.9" - W/O HDW - WASHED MAPLE
3	147084-36-T42	EA	DOOR - FLAT PANEL/PENCIL EDGE - 9.2" X 18.9" - W/O HDW - SIERRA MAPLE
4	133654-47-T41	EA	COUNTERTOP - LAMINATED - BRONZE LEGACY/WASHED MAPLE (T47)
4	133654-47-T42	EA	COUNTERTOP - LAMINATED - BRONZE LEGACY/SIERRA MAPLE (T48)
4	133654-47-T43	EA	COUNTERTOP - LAMINATED - CINDER GRAY/WASHED MAPLE (T49, T51)
4	133654-47-T44	EA	COUNTERTOP - LAMINATED - CINDER GRAY/SIERRA MAPLE (T50, T52)
5	137602-10-RW5	EA	POCKET - MAGAZINE RACK - W/RAIL (PEWTER) - WASHED MAPLE
5	137602-10-S79	EA	POCKET - MAGAZINE RACK - W/RAIL (PEWTER) - SIERRA MAPLE
6	155912-01-T41	EA	CABINET - OVERHEAD/MEDICINE - W/O DOORS/HDW - WASHED MAPLE
6	155912-01-T42	EA	CABINET - OVERHEAD/MEDICINE - W/O DOORS/HDW - SIERRA MAPLE
7	155912-25-T41	EA	SHELF - W/WOOD MOLDING - WASHED MAPLE
7	155912-25-T42	EA	SHELF - W/WOOD MOLDING - SIERRA MAPLE
8	136955-31-T47	EA	DOOR - RAISED PANEL/PENCIL EDGE - 10.2" X 21.5" - W/O HDW - WASHED MAPLE
8	136955-31-T48	EA	DOOR - RAISED PANEL/PENCIL EDGE - 10.2" X 21.5" - W/O HDW - SIERRA MAPLE
9	155911-01-T41	EA	CABINET - OVERHEAD/BATH - W/O DOORS/HDW - WASHED MAPLE
9	155911-01-T42	EA	CABINET - OVERHEAD/BATH - W/O DOORS/HDW - SIERRA MAPLE

COPYRIGHT © 2006 WINNEBAGO INDUSTRIES INC.

CABINET & APPLIANCE GROUP (CONTINUED)

CABINET & APPLIANCE LAYOUT (CONTINUED)

KEY	PART NUMBER	U/M	DESCRIPTION
10	136955-88-S40	EA	DOOR - RAISED PANEL/PENCIL EDGE - 13.4" X 21.9" - W/O HDW - WASHED MAPLE
10	136955-88-S41	EA	DOOR - RAISED PANEL/PENCIL EDGE - 13.4" X 21.9" - W/O HDW - SIERRA MAPLE
10	076767-04-000	EA	CABLE - STAINLESS STEEL - 5.9"
11	156477-01-T41	EA	CABINET - OVERHEAD/TV/REAR - W/O DOORS/HDW - WASHED MAPLE
11	156477-01-T42	EA	CABINET - OVERHEAD/TV/REAR - W/O DOORS/HDW - SIERRA MAPLE
12	156481-01-02B	EA	BRACKET/SUPPORT - TV - E-COATED
13	156476-01-T41	EA	CABINET/FACE - TV/OVERHEAD - W/O DOORS/HARDWARE - WASHED MAPLE
13	156476-01-T42	EA	CABINET/FACE - TV/OVERHEAD - W/O DOORS/HARDWARE - SIERRA MAPLE
14	126263-15-02B	EA	BRACKET - GAS SPRING W/BALL STUD - E-COATED
15	142569-29-000	EA	SPRING/GAS - 20 LB - 9.9" EXTENDED/5.9" COMPRESSED
16	126263-02-02B	EA	BRACKET - GAS SPRING W/BALL STUD - E-COATED
17	155859-01-T41	EA	END CAP - OVERHEAD CABINET - WASHED MAPLE
17	155859-01-T42	EA	END CAP - OVERHEAD CABINET - SIERRA MAPLE
18	153390-01-01A	EA	OVEN/MICROWAVE - 1.1 CU FT-NON-CONV-W/O TRIM-BLACK-UL/CSA FROM: 00-00-00 THRU: 02-08-06
18	158686-01-01A	EA	OVEN/MICROWAVE - .9 CU FT - NON-CONV - BLACK FROM: 02-09-06 THRU: 99-99-99
18*	150606-04-01A	EA	OVEN - MICROWAVE/CONVECTION/BLACK - .9 CU FT - #R-820BK - MICROWAVE/CONVECTION OVEN
19	149420-03-02B	EA	BRACE - MICROWAVE - E-COATED
20	149420-04-02B	EA	BRACE - MICROWAVE - E-COATED
21*	136354-05-01A	EA	HOOD - RANGE - W/LITE/FAN - BLACK TEXTURED - UL
21*	136354-06-01A	EA	HOOD - RANGE - W/LITE/FAN - BLACK TEXTURED - CANADIAN
21	112160-01-000	FT	SEAL - D SECTION - .2 X .3" - FOAM RUBBER
22	155841-03-T41	EA	CABINET - OVHD/GALLEY - W/O DOORS/HDW - WASHED MAPLE
22	155841-03-T42	EA	CABINET - OVHD/GALLEY - W/O DOORS/HDW - SIERRA MAPLE
22	155841-01-T41	EA	CABINET - OVHD/GALLEY - W/O DOORS/HDW - WASHED MAPLE - MICROWAVE/CONVECTION OVEN
22	155841-01-T42	EA	CABINET - OVHD/GALLEY - W/O DOORS/HDW - SIERRA MAPLE - MICROWAVE/CONVECTION OVEN
23	148655-01-S34	EA	END CAP - OVERHEAD CABINET - WASHED MAPLE
23	148655-01-S35	EA	END CAP - OVERHEAD CABINET - SIERRA MAPLE
24	145268-86-T47	EA	DOOR - RAISED PANEL/PENCIL EDGE - 17.1" X 11.4" - W/O HDW - WASHED MAPLE
24	145268-86-T48	EA	DOOR - RAISED PANEL/PENCIL EDGE - 17.1" X 11.4" - W/O HDW - SIERRA MAPLE
25	144803-ED-S40	EA	FACE/DRAWER - SOLID PANEL/PENCIL EDGE-6.7" X 25.2"-W/O HDW - WASHED MAPLE
25	144803-ED-S41	EA	FACE/DRAWER - SOLID PANEL/PENCIL EDGE-6.7" X 25.2"-W/O HDW - SIERRA MAPLE
26	149866-01-S34	EA	CABINET - OVERHEAD/DINETTE - W/O DOORS/HARDWARE - WASHED MAPLE
26	149866-01-S35	EA	CABINET - OVERHEAD/DINETTE - W/O DOORS/HARDWARE - SIERRA MAPLE
27	122021-01-02A	EA	ANGLE - W/HOLES - 8.6" LONG - OFF WHITE
28	145004-09-S34	EA	CABINET/DINETTE-RH-W/END CAP/BACK/FACE-W/O DOOR/SEAT BOARD - WASHED MAPLE
28	145004-09-S35	EA	CABINET/DINETTE-RH-W/END CAP/BACK/FACE-W/O DOOR/SEAT BOARD - SIERRA MAPLE
29	147084-08-S40	EA	DOOR - FLAT PANEL/PENCIL EDGE - 10" X 19.1" - W/O HDW - WASHED MAPLE
29	147084-08-S41	EA	DOOR - FLAT PANEL/PENCIL EDGE - 10" X 19.1" - W/O HDW - SIERRA MAPLE
30	081295-01-T03	EA	SUPPORT - BED/DINETTE - 28" LONG - WASHED MAPLE
30	081295-01-RE0	EA	SUPPORT - BED/DINETTE - 28" LONG - SIERRA MAPLE
31	143798-01-01A	EA	CATCH - FLOOR TO TABLE LEG - BRIGHT WHITE
31	143798-02-01A	EA	CATCH - TABLE LEG TO FLOOR - BRIGHT WHITE
32	144605-07-S34	EA	TABLE - DINETTE - 41.6" X 27.8" - W/O HARDWARE (T47)
32	144605-07-S35	EA	TABLE - DINETTE - 41.6" X 27.8" - W/O HARDWARE (T48)
32	144605-07-S38	EA	TABLE - DINETTE - 41.6" X 27.8" - W/O HARDWARE (T49, T51)
32	144605-07-S39	EA	TABLE - DINETTE - 41.6" X 27.8" - W/O HARDWARE (T50, T52)
33	064781-06-000	EA	HOLDER/CUP - TWO STEP - OFF WHITE
34	024281-15-000	EA	BRACKET/WALL - TABLE LIFT - 17.12"
35	024275-13-000	EA	ROD - TABLE LIFT - OFF/WHITE
36	140921-02-01A	EA	BRACKET/TABLE SUPPORT - 18.5" - OFF WHITE
37	145004-10-T41	EA	CABINET/DINETTE-LH-W/END CAP/BACK/FACE-W/O DOOR/SEAT BOARD - WASHED MAPLE
37	145004-10-S88	EA	CABINET/DINETTE-LH-W/END CAP/BACK/FACE-W/O DOOR/SEAT BOARD - SIERRA MAPLE
38	091261-01-000	FT	SLIPNOT - ANTISLIP - 1' WIDE X 12' - BLACK
39	155561-01-T47	EA	CABINET - GALLEY - W/O COUNTERTOP/DOORS/DRAWERS/HDW (T47)
39	155561-01-T48	EA	CABINET - GALLEY - W/O COUNTERTOP/DOORS/DRAWERS/HDW (T48)
39	155561-01-T43	EA	CABINET - GALLEY - W/O COUNTERTOP/DOORS/DRAWERS/HDW (T49)
39	155561-01-T44	EA	CABINET - GALLEY - W/O COUNTERTOP/DOORS/DRAWERS/HDW (T50)
39	155561-01-T41	EA	CABINET - GALLEY - W/O COUNTERTOP/DOORS/DRAWERS/HDW (T51)
39	155561-01-T42	EA	CABINET - GALLEY - W/O COUNTERTOP/DOORS/DRAWERS/HDW (T52)
40*	114030-04-01A	EA	RANGE - 3 BRNR TOP/NEW STYLE KNOBS/GRATES-W/O OVEN-BLK

COPYRIGHT © 2006 WINNEBAGO INDUSTRIES INC.

CABINET & APPLIANCE GROUP (CONTINUED)

CABINET & APPLIANCE LAYOUT (CONTINUED)

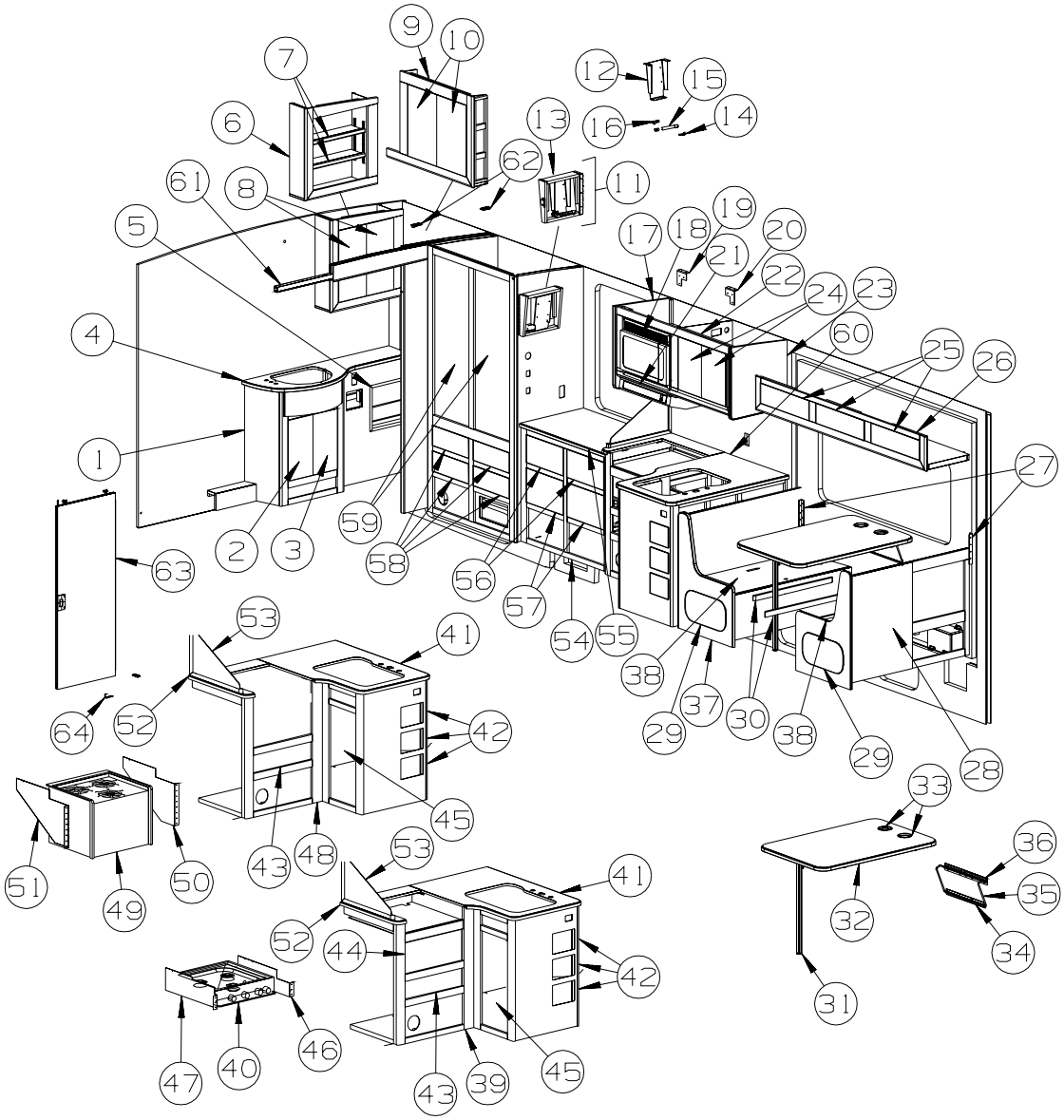

KEY	PART NUMBER	U/M	DESCRIPTION
41	133653-64-T41	EA	COUNTERTOP - LAMINATED - BRONZE LEGACY/WASHED MAPLE (T47)
41	133653-64-T42	EA	COUNTERTOP - LAMINATED - BRONZE LEGACY/SIERRA MAPLE (T48)
41	133653-64-T43	EA	COUNTERTOP - LAMINATED - CINDER GRAY/WASHED MAPLE (T49, T51)
41	133653-64-T44	EA	COUNTERTOP - LAMINATED - CINDER GRAY/SIERRA MAPLE (T50, T52)
42	153121-HF-T47	EA	DRAWER - PENCIL EDGE - 6.8"W X 17.7"D - W/O SLIDES/HDW - WASHED MAPLE
42	153121-HF-T48	EA	DRAWER - PENCIL EDGE - 6.8"W X 17.7"D - W/O SLIDES/HDW - SIERRA MAPLE
43	153121-08-SB6	EA	DRAWER - PENCIL EDGE - 19.8"W X 15.7"D - W/O SLIDES/HDW - WASHED MAPLE
43	153121-08-SB7	EA	DRAWER - PENCIL EDGE - 19.8"W X 15.7"D - W/O SLIDES/HDW - SIERRA MAPLE
44	153121-X7-T47	EA	DRAWER - PENCIL EDGE - 19.8"W X 15.7"D - W/O SLIDES/HDW - WASHED MAPLE
44	153121-X7-T48	EA	DRAWER - PENCIL EDGE - 19.8"W X 15.7"D - W/O SLIDES/HDW - SIERRA MAPLE
45	147084-32-T47	EA	DOOR - FLAT PANEL/PENCIL EDGE - 14.7" X 28.1" - W/O HDW - WASHED MAPLE
45	147084-32-T48	EA	DOOR - FLAT PANEL/PENCIL EDGE - 14.7" X 28.1" - W/O HDW - SIERRA MAPLE
46	142139-19-02B	EA	BRACKET/TIEDOWN - STOVE - E-COATED
47	142139-04-02B	EA	BRACKET/TIEDOWN - STOVE - E-COATED
48	155561-02-T47	EA	CABINET - GALLEY - W/O COUNTERTOP/DOORS/DRAWERS/HDW (T47) - RANGE W/OVEN
48	155561-02-T48	EA	CABINET - GALLEY - W/O COUNTERTOP/DOORS/DRAWERS/HDW (T48) - RANGE W/OVEN
48	155561-02-T43	EA	CABINET - GALLEY - W/O COUNTERTOP/DOORS/DRAWERS/HDW (T49) - RANGE W/OVEN
48	155561-02-T44	EA	CABINET - GALLEY - W/O COUNTERTOP/DOORS/DRAWERS/HDW (T50) - RANGE W/OVEN
48	155561-02-T41	EA	CABINET - GALLEY - W/O COUNTERTOP/DOORS/DRAWERS/HDW (T51) - RANGE W/OVEN
48	155561-02-T42	EA	CABINET - GALLEY - W/O COUNTERTOP/DOORS/DRAWERS/HDW (T52) - RANGE W/OVEN

COPYRIGHT © 2006 WINNEBAGO INDUSTRIES INC.

CABINET & APPLIANCE GROUP (CONTINUED)

CABINET & APPLIANCE LAYOUT (CONTINUED)

KEY	PART NUMBER	U/M	DESCRIPTION
49*	151277-01-01A	EA	RANGE-16"-3 BURNER - MERCURY FREE - BLACK DOOR/TEXTURED
50	140176-03-02B	EA	BRACKET/TIEDOWN - STOVE - E-COATED
51	140176-04-02B	EA	BRACKET/TIEDOWN - STOVE - E-COATED
52	145211-03-T41	EA	SPLASHGUARD - WASHED MAPLE
52	145211-03-T42	EA	SPLASHGUARD - SIERRA MAPLE
53	127117-03-01A	EA	GLASS - STATIONARY - SPLASHGUARD
54	155562-01-T41	EA	CABINET - NIGHTSTAND - W/O COUNTERTOP/DOORS/DRAWERS/HDW - WASHED MAPLE
54	155562-01-T42	EA	CABINET - NIGHTSTAND - W/O COUNTERTOP/DOORS/DRAWERS/HDW - SIERRA MAPLE
55	140887-21-T41	EA	COUNTERTOP - LAMINATED - BRONZE LEGACY/WASHED MAPLE (T47)
55	140887-21-T42	EA	COUNTERTOP - LAMINATED - BRONZE LEGACY/SIERRA MAPLE (T48)
55	140887-21-T43	EA	COUNTERTOP - LAMINATED - CINDER GRAY/WASHED MAPLE (T49, T51)
55	140887-21-T44	EA	COUNTERTOP - LAMINATED - CINDER GRAY/SIERRA MAPLLE (T50, T52)
56	153121-HH-T47	EA	DRAWER - PENCIL EDGE - 15.1"W X 15.7"D - W/O SLIDES/HDW - WASHED MAPLE
56	153121-HH-T48	EA	DRAWER - PENCIL EDGE - 15.1"W X 15.7"D - W/O SLIDES/HDW - SIERRA MAPLE
57	153121-HM-T47	EA	DRAWER - PENCIL EDGE - 15.1"W X 15.7"D - W/O SLIDES/HDW - WASHED MAPLE
57	153121-HM-T48	EA	DRAWER - PENCIL EDGE - 15.1"W X 15.7"D - W/O SLIDES/HDW - SIERRA MAPLE
58	153121-HK-T47	EA	DRAWER - PENCIL EDGE - 14.7"W X 15.7"D - W/O SLIDES/HDW - WASHED MAPLE
58	153121-HK-T48	EA	DRAWER - PENCIL EDGE - 14.7"W X 15.7"D - W/O SLIDES/HDW - SIERRA MAPLE
59	141507-03-T47	EA	DOOR - MIRRORED/PENCIL EDGE - 16.7" X 48" - W/O HDW - WASHED MAPLE
59	141507-03-T48	EA	DOOR - MIRRORED/PENCIL EDGE - 16.7" X 48" - W/O HDW - SIERRA MAPLE
60	133653-65-T41	EA	COUNTERTOP - LAMINATED - BRONZE LEGACY/WASHED MAPLE (T47)
60	133653-65-T42	EA	COUNTERTOP - LAMINATED - BRONZE LEGACY/SIERRA MAPLE (T48)
60	133653-65-T43	EA	COUNTERTOP - LAMINATED - CINDER GRAY/WASHED MAPLE (T49, T51)
60	133653-65-T44	EA	COUNTERTOP - LAMINATED - MAGIC MOON/SIERRA MAPLE (T50, T52)
61	145608-11-01A	EA	TRACK - DOOR - 55.4" - OFF WHITE
62	150983-01-01A	EA	STRIKE/BLOCK - WEDGE STYLE - F/SLIDE DOOR - 3"X1.2"-BLACK
63	146047-A1-T41	EA	DOOR - SLIDING - W/O HARDWARE - WASHED MAPLE
63	146047-A1-T42	EA	DOOR - SLIDING - W/O HARDWARE - SIERRA MAPLE
64	149607-06-02B	EA	GUIDE - F/POCKET DOOR - 1.8" BENT ROD - E-COATED

***COMPONENT PARTS LISTED LATER IN THIS GROUP**

COPYRIGHT © 2006 WINNEBAGO INDUSTRIES INC.

CABINET & APPLIANCE GROUP (CONTINUED)

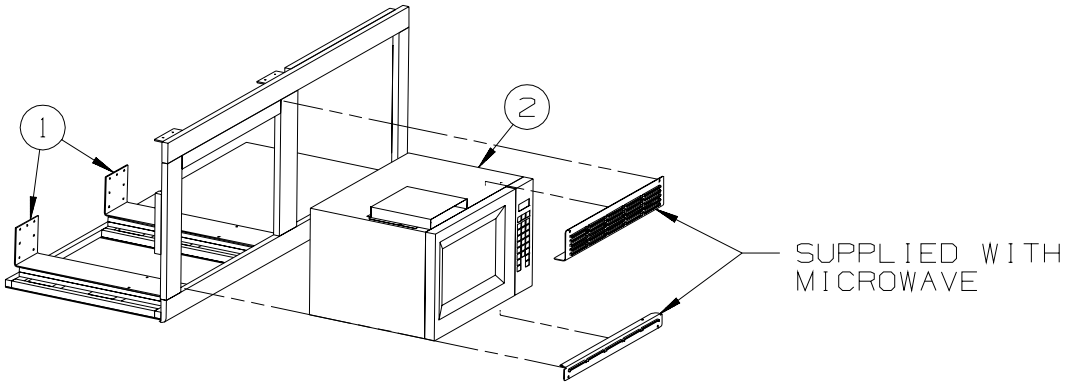

NON-CONVECTION OVEN
FROM: 00-00-00
THRU: 02-08-06

KEY	PART NUMBER	U/M	DESCRIPTION
1	143759-11-02B	EA	BRACKET - MICROWAVE - E-COATED
2	153390-01-01A	EA	OVEN/MICROWAVE - 1.1 CU FT-NON-CONV-W/O TRIM-BLACK-UL/CSA

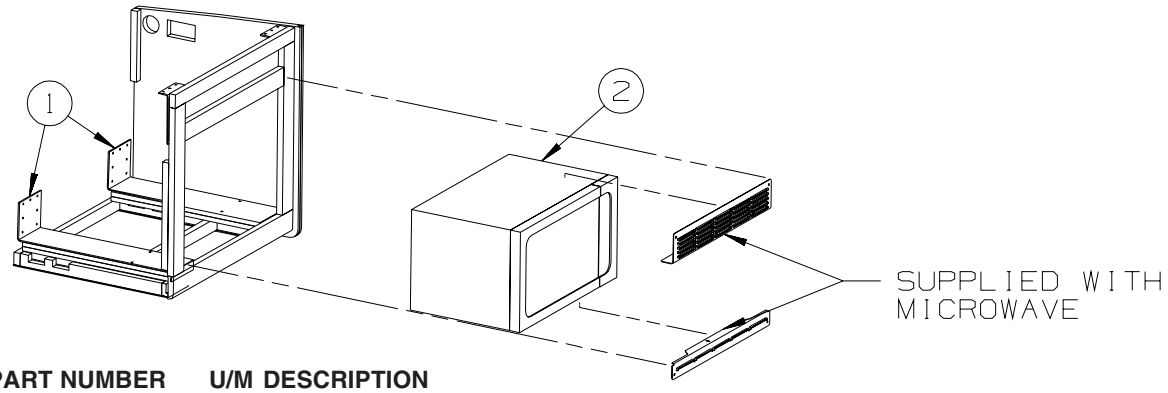

NON-CONVECTION OVEN
FROM: 02-09-06
THRU: 99-99-99

KEY	PART NUMBER	U/M	DESCRIPTION
1	143759-11-02B	EA	BRACKET - MICROWAVE - E-COATED
2	158686-01-01A	EA	OVEN/MICROWAVE - .9 CU FT - NON-CONV - BLACK

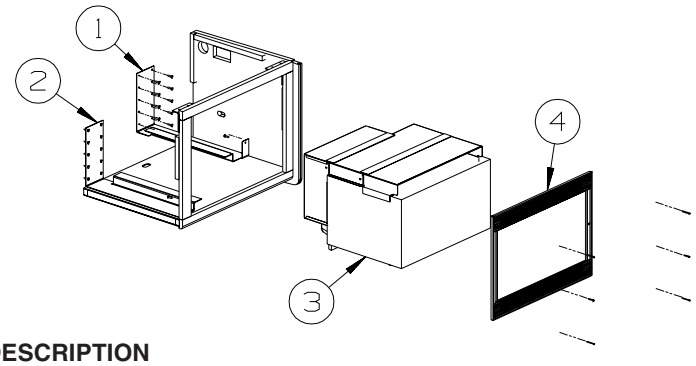

CONVECTION MICROWAVE

KEY	PART NUMBER	U/M	DESCRIPTION
1	149418-01-02B	EA	BRACKET - MICROWAVE - E-COATED - NOT ILLUSTRATED FROM: 00-00-00 THRU: 05-12-05
1	149418-09-02B	EA	BRACKET - MICROWAVE - E-COATED FROM: 05-13-05 THRU: 99-99-99
2	149418-02-02B	EA	BRACKET - MICROWAVE - E-COATED - NOT ILLUSTRATED FROM: 00-00-00 THRU: 05-12-05
2	149418-10-02B	EA	BRACKET - MICROWAVE - E-COATED FROM: 05-13-05 THRU: 99-99-99
3*	150606-04-01A	EA	OVEN - MICROWAVE/CONVECTION/BLACK - .9 CU FT - #R-820BK
4	150606-05-01A	EA	TRIM KIT - MICROWAVE .9 CU FT - BLACK - MAGNADYNE #R820

***COMPONENT PARTS LISTED LATER IN THIS GROUP**

COPYRIGHT © 2006 WINNEBAGO INDUSTRIES INC.

CABINET & APPLIANCE GROUP (CONTINUED)

CABINET & APPLIANCE LAYOUT (CONTINUED)

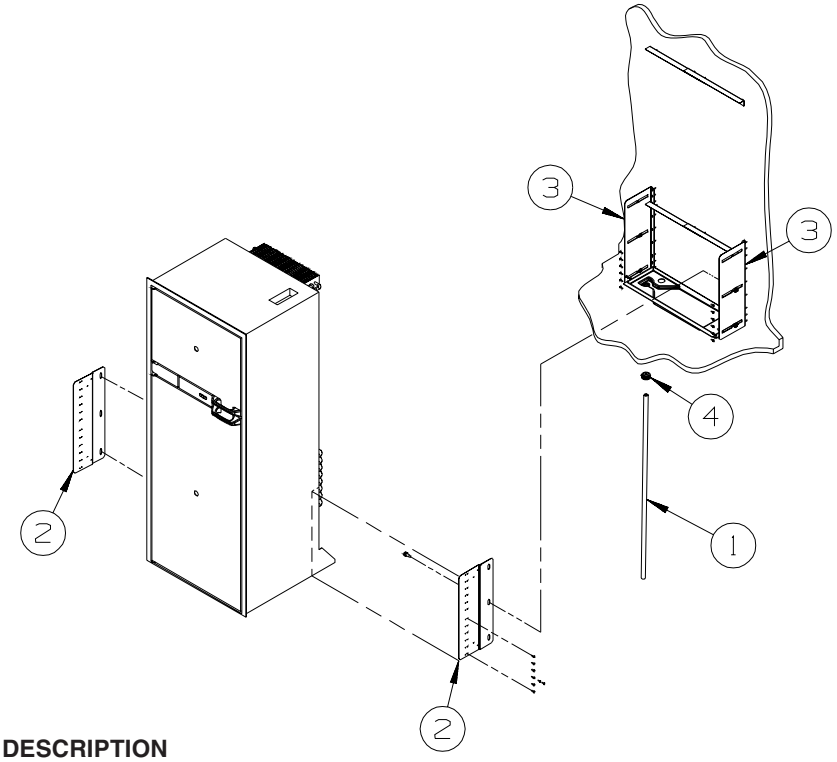

KEY	PART NUMBER	U/M	DESCRIPTION
1	112176-01-000	FT	TUBING - VINYL - REINFORCED - 1/2" ID
2	150740-01-02B	EA	BRACKET - REFRIGERATOR - E-COATED
3	150740-02-02B	EA	BRACKET - REFRIGERATOR - E-COATED
4	152417-01-01A	EA	CLAMP/RATCHET - F/REFRIDGERATOR DRIP TRAY HOSE - BLACK

COPYRIGHT © 2006 WINNEBAGO INDUSTRIES INC.

CABINET & APPLIANCE GROUP (CONTINUED)

COMPONENT PARTS FOR CABINET & APPLIANCE LAYOUT

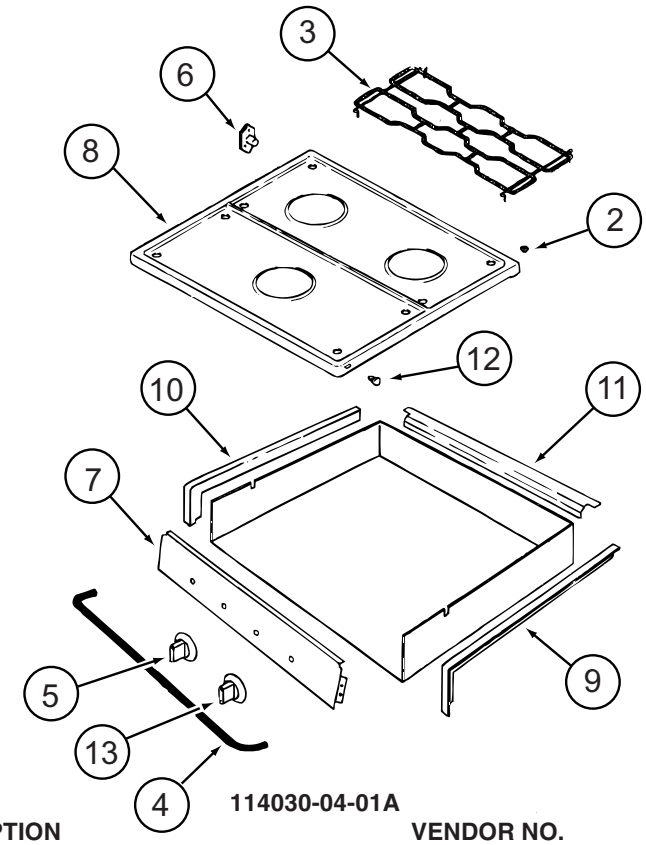

114030-04-01A

KEY	PART NUMBER	U/M	DESCRIPTION	VENDOR NO.
2	102020-01-709	EA	BUMPER-GRATE	8007P020-60
3	112881-04-702	EA	GRATE - BLACK	74007277
4	114030-02-700	EA	GUARD/FABRIC - TOWEL BAR	3609F006-70
5	128728-01-701	EA	KNOB - BURNER - REAR	74003941 (1 PER)
5	128728-01-702	EA	KNOB - BURNER - FRONT	74003942 (2 PER)
6	128728-01-703	EA	PIN/T-NUT F/HINGE	7103P109-60
7	114030-04-700	EA	PANEL - MANIFOLD - BLACK	74007325
8	126023-01-728	EA	TOP - MAIN (BLACK)	74003323
9	114030-01-704	EA	TRIM - RIGHT/BLACK TEXTURED	74002839
10	114030-01-705	EA	TRIM - LEFT/BLACK TEXTURED	74002840
11	114030-01-706	EA	TRIM - REAR/BLACK TEXTURED	74002841
12	102020-01-724	EA	BUMPER - MAIN TOP	8003P008-60
13	128728-01-707	EA	KNOB - IGNITER	74003944

CONTACT WINNEBAGO PART SALES FOR UNLISTED COMPONENT(S)

COPYRIGHT © 2006 WINNEBAGO INDUSTRIES INC.

CABINET & APPLIANCE GROUP (CONTINUED)

COMPONENT PARTS FOR CABINET & APPLIANCE LAYOUT (CONTINUED)

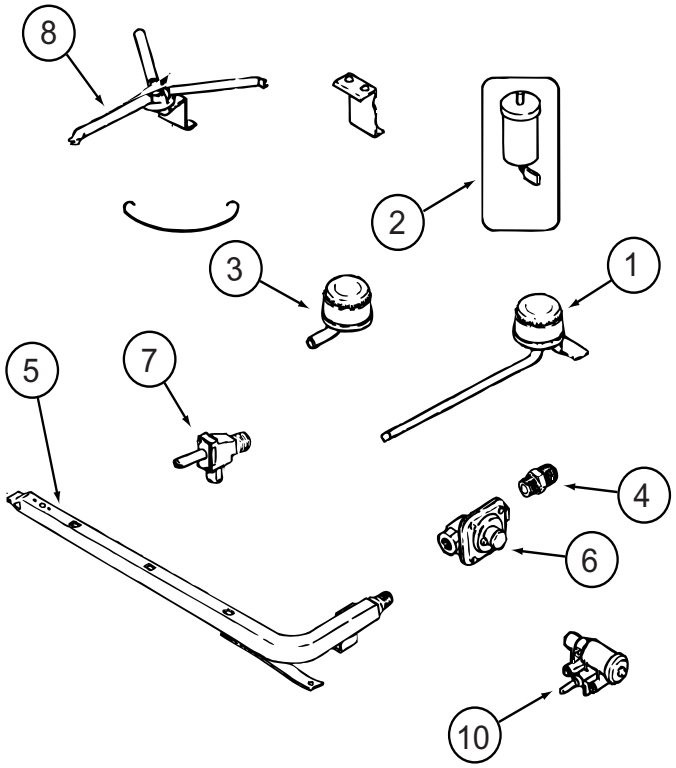

114030-04-01A (CONTINUED)

KEY	PART NUMBER	U/M	DESCRIPTION	VENDOR NO.
1	112881-04-700	EA	BURNER - TOP /LEFT - REAR	74004584
1	126023-01-700	EA	BURNER - TOP (RT-REAR) 5100 BTU	74004583
2	112881-04-705	EA	PUSH RING (ELECTRODE MTG)	7104P002-60
2	126023-01-711	EA	ELECTRODE - IGNITER (ONLY)	7432P077-60
3	112881-04-701	EA	BURNER - TOP/FRONT	74004582
4	135065-03-700	EA	FITTING - HALF UNION	74004234
5	135065-01-702	EA	PIPE/MANIFOLD	74004642
6	126023-02-702	EA	PIPE - MANIFOLD	74004360
7	126023-02-705	EA	VALVE - BURNER - REAR	74004362
7	126023-02-706	EA	VALVE - BURNER - FRONT	74004363
8	126023-01-736	EA	FLASH TUBE EXTENSION (REAR)	74003326
8	126023-01-737	EA	FLASH TUBE EXTENSION (FRONT)	74003327
10	126023-01-719	EA	IGNITER HEAD - TOP BURNER	74002413

CONTACT WINNEBAGO PART SALES FOR UNLISTED COMPONENT(S)

COPYRIGHT © 2006 WINNEBAGO INDUSTRIES INC.

CABINET & APPLIANCE GROUP (CONTINUED)

COMPONENT PARTS FOR CABINET & APPLIANCE LAYOUT (CONTINUED)

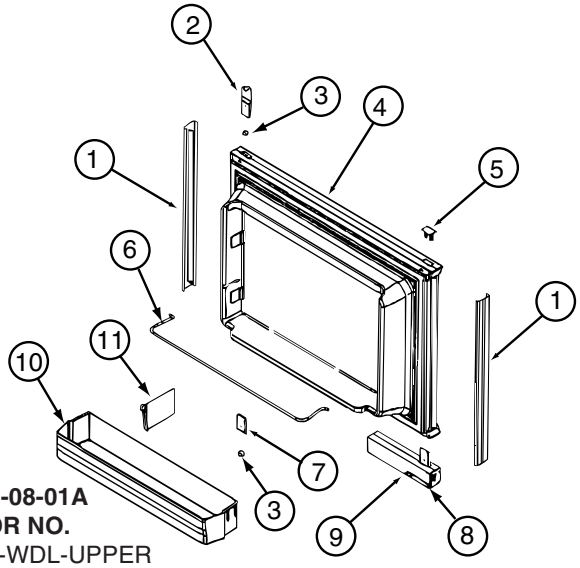

121568-06-01A, 121568-07-01A, 121568-08-01A

KEY	PART NUMBER	U/M	DESCRIPTION	VENDOR NO.
1	121568-03-700	EA	RETAINER-DOOR PNL/WAFFLE/BLK	619558-WDL-UPPER
2	120075-01-701	EA	HINGE-TOP RH/BOTTOM LH(DOOR)	618511
3	121568-03-701	EA	BUSHING - HINGE PIN/GRAY	619671
4	121568-03-702	EA	DOOR LINER-UPR/WAFFLED/BLACK	619627 - SMALL WDL
5	120075-01-702	EA	CAP, (HINGE PLUG)	618160
6	121568-01-700	EA	RAIL - DOOR UPPER	618618
7	120075-01-705	EA	HINGE-TOP LH/BOTTOM RH(DOOR)	618510
8	121568-03-705	EA	STORAGE LATCH - GRAY	619648
9	121568-03-721	EA	HANDLE/DOOR TOP LH/LWR RH	621465
9	121568-03-722	EA	HANDLE/DOOR LWR RH/TOP LH	621469
10	121568-01-701	EA	BIN - DOOR WHITE-WAFFLED LNR	618619 WDL

CONTACT WINNEBAGO PART SALES FOR UNLISTED COMPONENT(S)

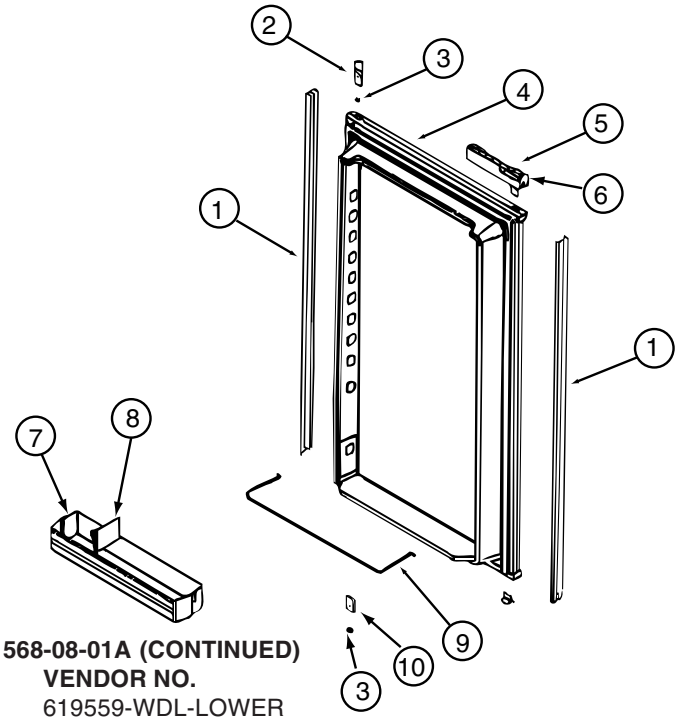

121568-06-01A, 121568-07-01A, 121568-08-01A (CONTINUED)

KEY	PART NUMBER	U/M	DESCRIPTION	VENDOR NO.
1	121568-03-706	EA	RETAINER-DOOR PNL/WAFFLE/BLK	619559-WDL-LOWER
2	120075-01-701	EA	HINGE-TOP RH/BOTTOM LH(DOOR)	618511
3	121568-03-701	EA	BUSHING - HINGE PIN/GRAY	619671
4	121568-03-707	EA	DOOR LINER-LWR/WAFFLED/B/TRM	619629
5	121568-03-721	EA	HANDLE/DOOR TOP LH/LWR RH	621465
5	121568-03-722	EA	HANDLE/DOOR LWR RH/TOP LH	621469
6	121568-03-705	EA	STORAGE LATCH - GRAY	619648
7	121568-01-701	EA	BIN - DOOR WHITE-WAFFLED LNR	618619 WDL
9	121568-01-704	EA	RAIL - DOOR LOWER	618578
10	120075-01-705	EA	HINGE-TOP LH/BOTTOM RH(DOOR)	618510

CONTACT WINNEBAGO PART SALES FOR UNLISTED COMPONENT(S)

COPYRIGHT © 2006 WINNEBAGO INDUSTRIES INC.

CABINET & APPLIANCE GROUP (CONTINUED)

COMPONENT PARTS FOR CABINET & APPLIANCE LAYOUT (CONTINUED)

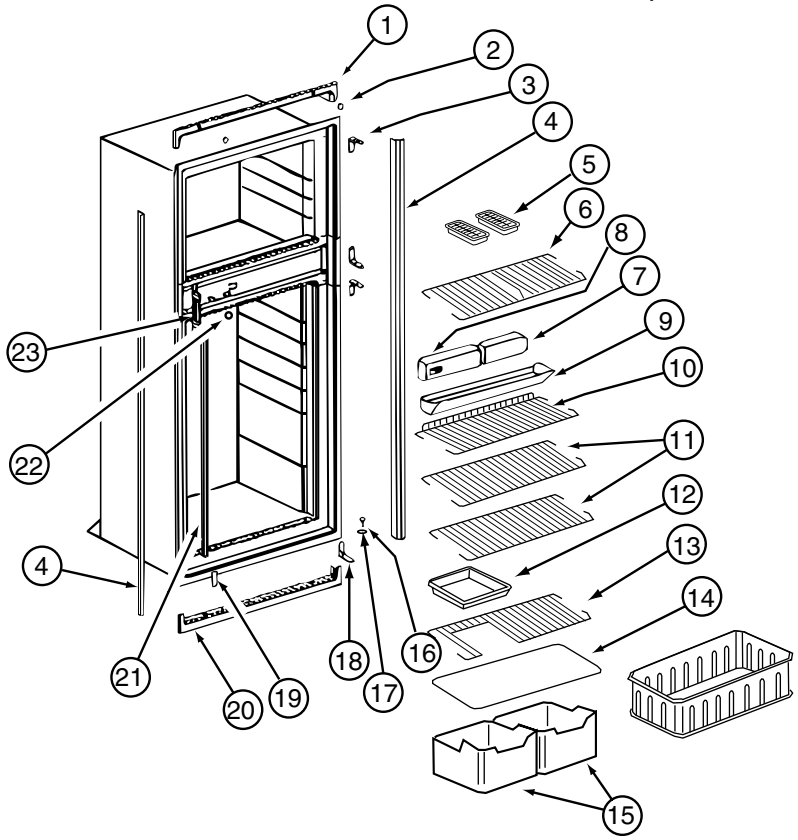

121568-06-01A, 121568-07-01A, 121568-08-01A (CONTINUED)

KEY	PART NUMBER	U/M	DESCRIPTION	VENDOR NO.
1	120075-01-713	EA	TRIM-TOP PIECE	619687
2	120075-01-714	EA	PLUG-HOLE (BLACK)	618170
3	121568-03-710	EA	HINGE/CABINET-TOP/RH-LWR/LH	619335 WAFFLED
4	121568-03-711	EA	TRIM - SIDE/BLACK	622295
6	121568-01-705	EA	SHELF - WIRE FREEZER	620250
7	121568-06-700	EA	FRONT BOX-N611	622002
8	121568-06-701	EA	CONTROL ASSY-OPTICAL/N611	621988
9	120075-01-720	EA	TRAY-DRIP	623250
9	120075-01-721	EA	LOUVER-DRIP TRAY	618176
11	121568-01-708	EA	SHELF - WIRE	620273
13	121568-01-707	EA	SHELF - WIRE - SHORT	620272
14	120075-01-725	EA	COVER-CRISPER	618158
15	121568-01-709	EA	CRISPER	618571
16	120075-01-727	EA	PIN-HINGE	618145
17	121568-03-701	EA	BUSHING - HINGE PIN/GRAY	619671
18	121568-03-715	EA	HINGE/CABINET-TOP/LH-LWR/RH	619336 WAFFLED
19	121568-03-716	EA	COVER - HINGE HOLES	619301
20	120075-01-729	EA	TRIM-BOTTOM PIECE	620958
21	121568-06-702	EA	CLIP - SHELF	61536522
22	121568-06-703	EA	HOLE PLUG - WHITE	620282
23	120075-01-732	EA	PLATE-STRIKE	618167

CONTACT WINNEBAGO PART SALES FOR UNLISTED COMPONENT(S)

COPYRIGHT © 2006 WINNEBAGO INDUSTRIES INC.

CABINET & APPLIANCE GROUP (CONTINUED)

COMPONENT PARTS FOR CABINET & APPLIANCE LAYOUT (CONTINUED)

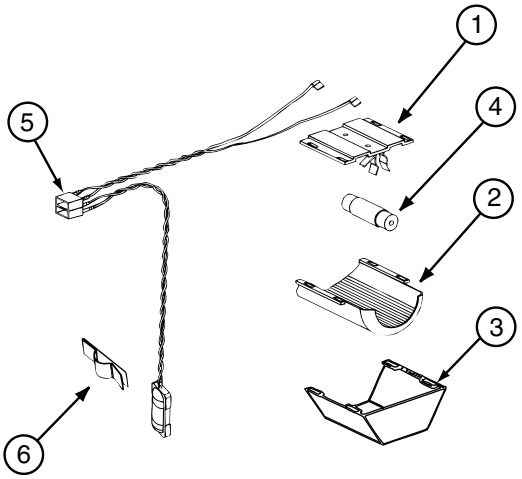

121568-03-01A, 121568-04-01A, 121568-05-01A, 121568-06-01A, 121568-07-01A, 121568-08-01A (CONTINUED)

KEY	PART NUMBER	U/M	DESCRIPTION	VENDOR NO.
1	084880-01-760	EA	CLIP (THERMISTER)	61689122
2	120075-01-735	EA	THERMISTER W/LAMP & WIRE/ASM	618548
3	084880-03-705	EA	BRACKET-LIGHT-INTERIOR	61629722
4	084880-03-706	EA	BULB-LAMP	61628922
6	084880-03-707	EA	COVER-LAMP, LENS	61627922
			CONTACT WINNEBAGO PART SALES FOR UNLISTED COMPONENT(S)	

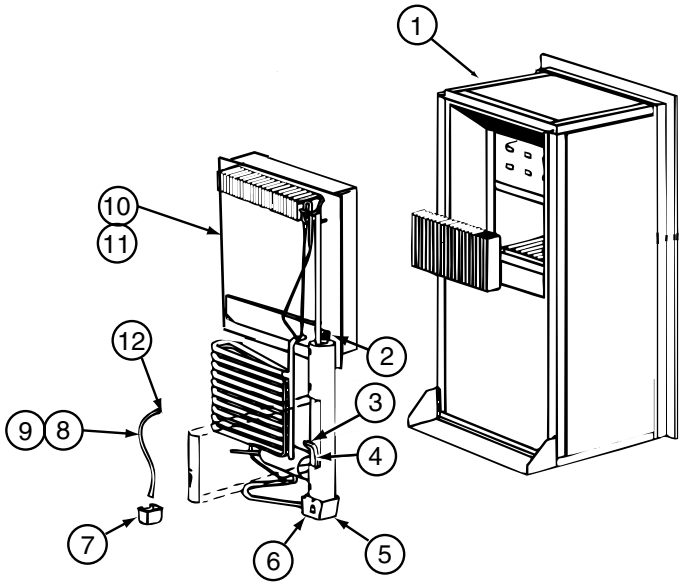

121568-06-01A, 121568-07-01A, 121568-08-01A (CONTINUED)

KEY	PART NUMBER	U/M	DESCRIPTION	VENDOR NO.
4	121568-06-704	EA	HEATER-AC/300W/120VAC	621702
10	120076-01-704	EA	COOLING UNIT, SERVICE PACK	618543
			CONTACT WINNEBAGO PART SALES FOR UNLISTED COMPONENT(S)	

COPYRIGHT © 2006 WINNEBAGO INDUSTRIES INC.

CABINET & APPLIANCE GROUP (CONTINUED)

COMPONENT PARTS FOR CABINET & APPLIANCE LAYOUT (CONTINUED)

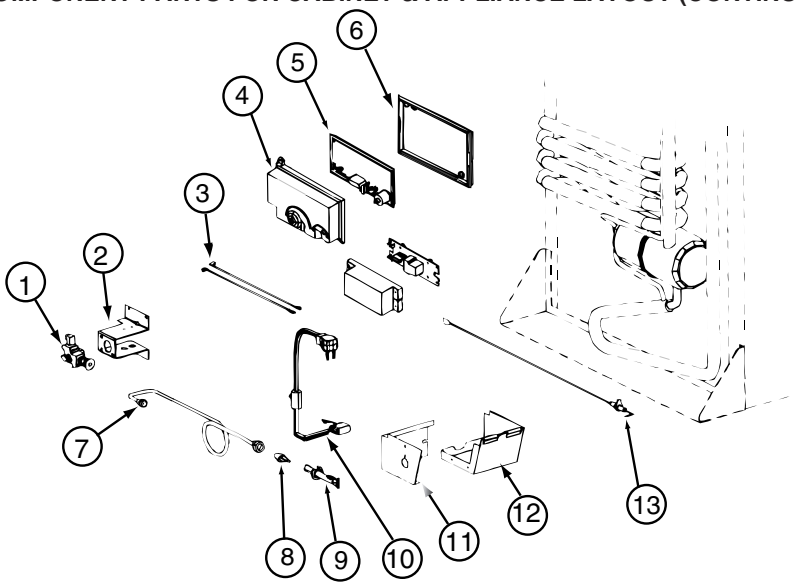

121568-06-01A, 121568-07-01A, 121568-08-01A (CONTINUED)

KEY	PART NUMBER	U/M	DESCRIPTION	VENDOR NO.
1	121568-06-705	EA	GAS VALVE/BRKT ASSY-COMBO	621439
1	121568-06-706	EA	GAS VALVE-COMBO/WRENCH FLAT	621329
4	120075-01-738	EA	COVER-POWER BOARD	618185
5	121568-06-707	EA	BOARD/POWER-N611	621991 = 621991001
6	120075-01-740	EA	COVER-BASE, POWER BOARD	618186
8	121568-06-708	EA	BURNER/ORFICE-ADAPTER KIT	621957
13	104137-06-715	EA	ELECTRODE-SPARK/SENSOR, SGL	61692222
			CONTACT WINNEBAGO PART SALES FOR UNLISTED COMPONENT(S)	

121568-05-01A, 121568-07-01A, 121568-08-01A (CONTINUED)

KEY	PART NUMBER	U/M	DESCRIPTION	VENDOR NO.
	121568-05-700	EA	FAN 12V KIT DBLE SIDEWALL	619020

COPYRIGHT © 2006 WINNEBAGO INDUSTRIES INC.

CABINET & APPLIANCE GROUP (CONTINUED)

COMPONENT PARTS FOR CABINET & APPLIANCE LAYOUT (CONTINUED)

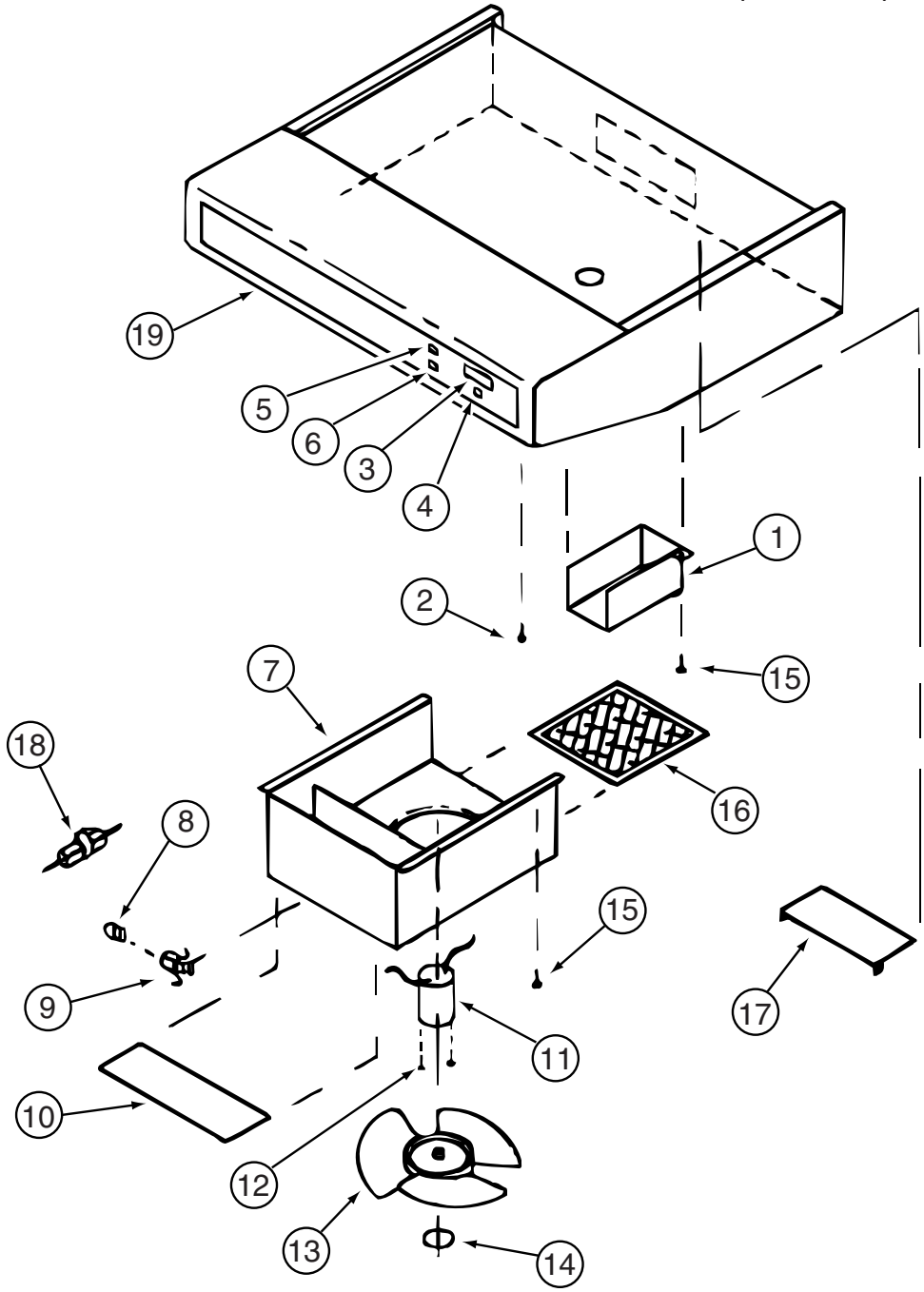

136354-05-01A, 136354-05-02A

KEY	PART NUMBER	U/M	DESCRIPTION	VENDOR NO.
3	100258-10-700	EA	GAUGE-HOUR METER, SCREW ON	L0150-00 WAS 150
4	096983-01-702	EA	SWITCH - MOM/OFF/MOM/3 TERM	L0112-00
6	096983-01-700	EA	SWITCH/1 SPEED -ON/OFF- BLK	L0108-00
8	117806-01-000	EA	BULB-12V NO.912 1.0 AMPS	GENERAL MOTOR HOMES
9	092696-01-710	EA	HOLDER-LAMP	CB267-02
10	096983-01-708	EA	LENS-LAMP	CC0179
11	136354-05-700	EA	MOTOR-12 VOLT	VC0536-02
13	136354-05-701	EA	BLADE-FAN 7" DIA	VD0216-00
16	096983-01-707	EA	FILTER-MESH	CC0246-00
17	100258-01-701	EA	DAMPER ASSEMBLY (METAL FLAP)	CA0565-00
19	100258-01-700	EA	LABEL-HOOD NOSE	CC0428-00

CONTACT WINNEBAGO PART SALES FOR UNLISTED COMPONENT(S)

COPYRIGHT © 2006 WINNEBAGO INDUSTRIES INC.

CABINET & APPLIANCE GROUP (CONTINUED)

COMPONENT PARTS FOR CABINET & APPLIANCE LAYOUT (CONTINUED)

136354-06-01A, 136354-06-02A

KEY	PART NUMBER	U/M	DESCRIPTION	VENDOR NO.
3	100258-10-700	EA	GAUGE-HOUR METER, SCREW ON	L0150-00 WAS 150
4	096983-01-702	EA	SWITCH - MOM/OFF/MOM/3 TERM	L0112-00
5	096983-01-700	EA	SWITCH/1 SPEED -ON/OFF- BLK	L0108-00
8	117806-01-000	EA	BULB-12V NO.912 1.0 AMPS	GENERAL MOTOR HOMES
9	092696-01-710	EA	HOLDER-LAMP	CB0267-02
10	096983-01-708	EA	LENS-LAMP	CC0179
11	136354-06-700	EA	MOTOR - FAN (CSA)	VC0535-02
13	136354-05-701	EA	BLADE-FAN 7" DIA	VD0216-00
16	096983-01-707	EA	FILTER-MESH	CC0246-00
17	100258-01-701	EA	DAMPER ASSEMBLY (METAL FLAP)	CA0565-00
19	100258-01-700	EA	LABEL-HOOD NOSE	CC0428-00
			CONTACT WINNEBAGO PART SALES FOR UNLISTED COMPONENT(S)	

150606-04-01A, 150606-04-02A

KEY	PART NUMBER	U/M	DESCRIPTION	VENDOR NO.
	150606-04-700	EA	RACK - BAKING	FAMI-A104WRM0

COPYRIGHT © 2006 WINNEBAGO INDUSTRIES INC.

CABINET & APPLIANCE GROUP (CONTINUED)

COMPONENT PARTS FOR CABINET & APPLIANCE LAYOUT (CONTINUED)

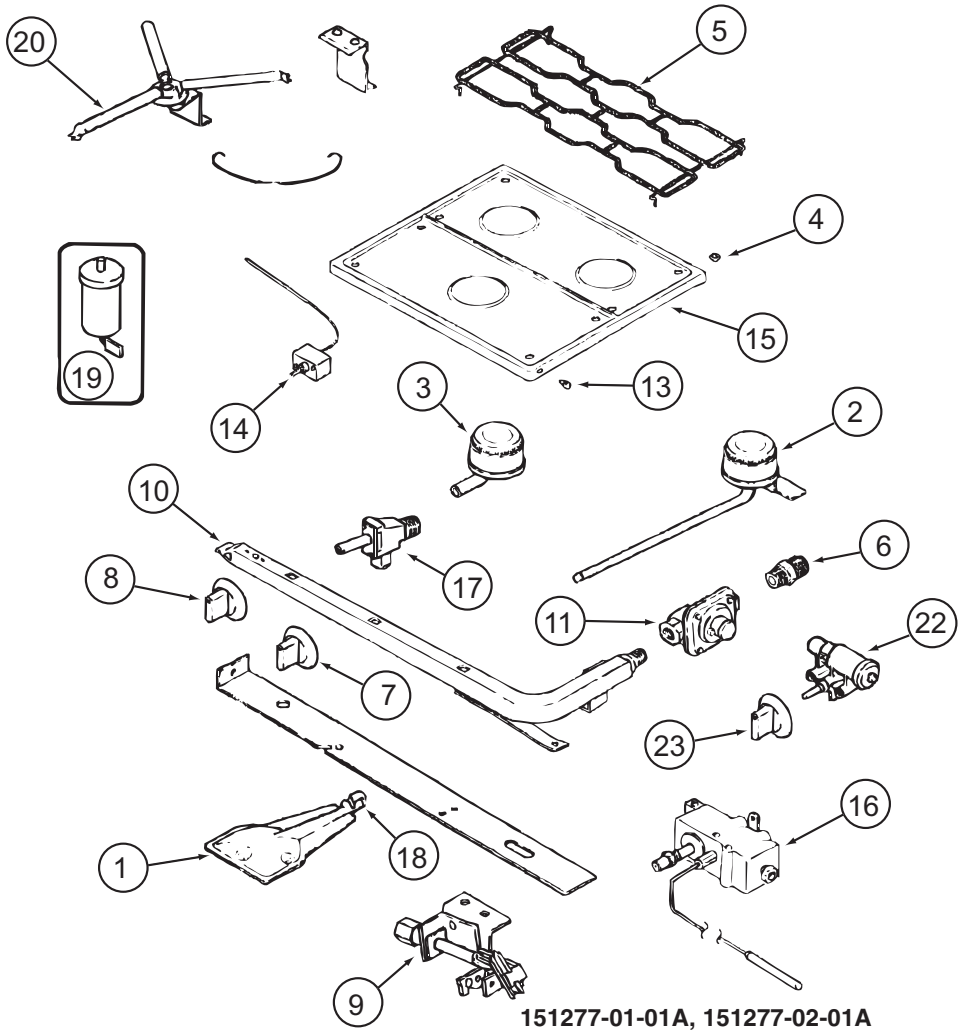

151277-01-01A, 151277-02-01A

151277-01-01A, 151277-02-01A (CONTINUED)

KEY	PART NUMBER	U/M	DESCRIPTION	VENDOR NO.
1	151279-02-700	EA	BURNER - OVEN - W/SHUTTER	74009853
2	112881-04-700	EA	BURNER - TOP/LEFT REAR	74004584
2	126023-01-700	EA	BURNER-TOP (RT-REAR) 5100BTU	74004583
3	112881-04-701	EA	BURNER - TOP/FRONT	74004582
4	102020-01-709	EA	BUMPER-GRATE	8007P020-60
5	112881-04-702	EA	GRATE - BLACK	74007277
6	135065-03-700	EA	FITTING - HALF UNION	74004234
7	128728-01-701	EA	KNOB - BURNER - REAR	74003941 (1 PER)
7	128728-01-702	EA	KNOB - BURNER - FRONT	74003942 (2 PER)
8	151279-02-701	EA	KNOB - THERMOSTAT - BLACK	74009858
9	151279-01-700	EA	PILOT - BURNER - 16” SERIES	74009852
10	151279-02-702	EA	PIPE - MANIFOLD	74009856
11	112881-03-701	EA	REGULATOR KIT W/FITTINGS	12001285
13	102020-01-724	EA	BUMPER-MAIN TOP	8003P008-60
14	151279-02-703	EA	THERMOSTAT	74009855
15	151277-01-700	EA	TOP - MAIN (BLACK)	74007287
16	151279-02-704	EA	ELBOW BLOCK ASM (VALVE-OVEN)	74009864
17	151277-01-701	EA	VALVE/REAR - W/SET SCREW	12002254
17	151277-01-702	EA	VALVE/FRONT - W/SET SCREW	12002246
19	112881-04-705	EA	PUSH RING (ELECTRODE MTG)	7104P002-60
19	126023-01-711	EA	ELECTRODE - IGNITER (ONLY)	7432P077-60
20	126023-01-736	EA	FLASH TUBE EXTENSION (REAR)	74003326
20	126023-01-737	EA	FLASH TUBE EXTENSION (FRONT)	74003327
21	112881-04-708	EA	CLIP-FLASH TUBE	7112P068-60
22	126023-01-735	EA	KIT - IGNITOR TOP BRNER & KNOB	12001296=74002413&4
23	128728-01-707	EA	KNOB - IGNITOR	74003944
26	112881-04-709	EA	SHIELD-SPARK	3604F211-45

CONTACT WINNEBAGO PART SALES FOR UNLISTED COMPONENT(S)

COPYRIGHT © 2006 WINNEBAGO INDUSTRIES INC.

CABINET & APPLIANCE GROUP (CONTINUED)

COMPONENT PARTS FOR CABINET & APPLIANCE LAYOUT (CONTINUED)

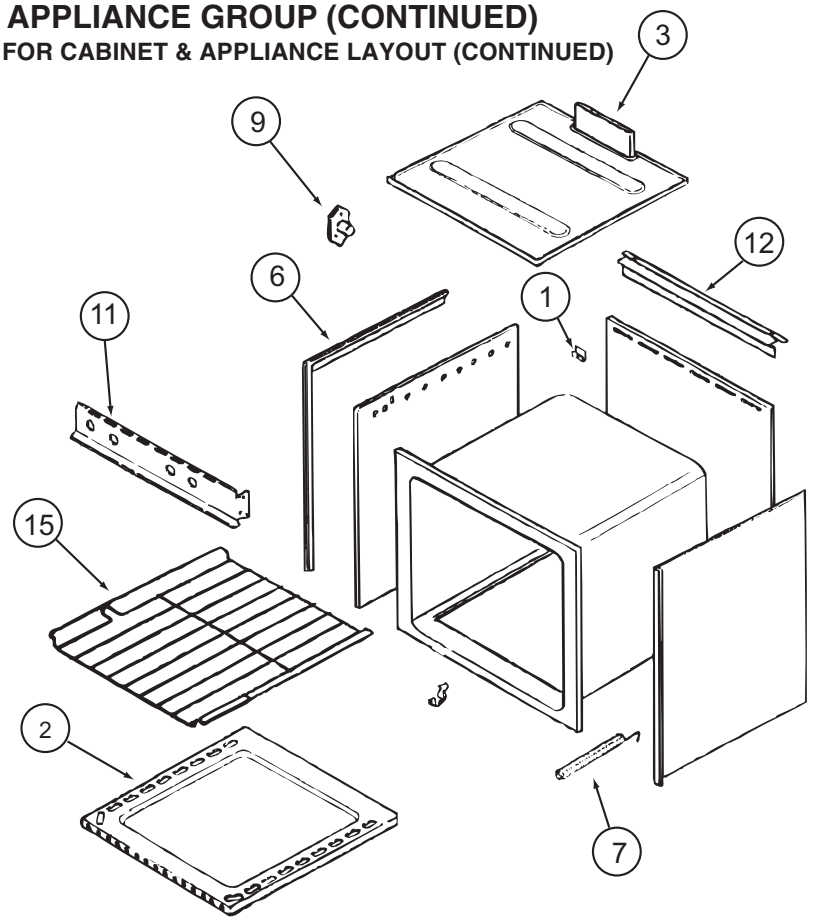

151277-01-01A (CONTINUED)

KEY	PART NUMBER	U/M	DESCRIPTION	VENDOR NO.
1	112881-03-702	EA	CLIP - MAIN TOP	74003998
2	126023-01-731	EA	BOTTOM - OVEN	2205F016-19
3	126023-01-718	EA	FLUE BOX ASSEMBLY	4006W075-80
6	126023-01-713	EA	TRIM - SIDE (RIGHT) BLACK	74002827
6	126023-01-714	EA	TRIM - SIDE (LEFT) BLACK	74002828
7	135066-03-700	EA	SPRING - OVEN DOOR	74001835
9	128728-01-703	EA	PIN/T-NUT F/HINGE	7103P109-60
11	112881-04-707	EA	MANIFOLD - BLACK	74007296
12	112881-01-721	EA	DEFLECT0R/FLUE-BLK-SEALED BR	74002829
15	126023-01-716	EA	RACK - OVEN	74003106

CONTACT WINNEBAGO PART SALES FOR UNLISTED COMPONENT(S)

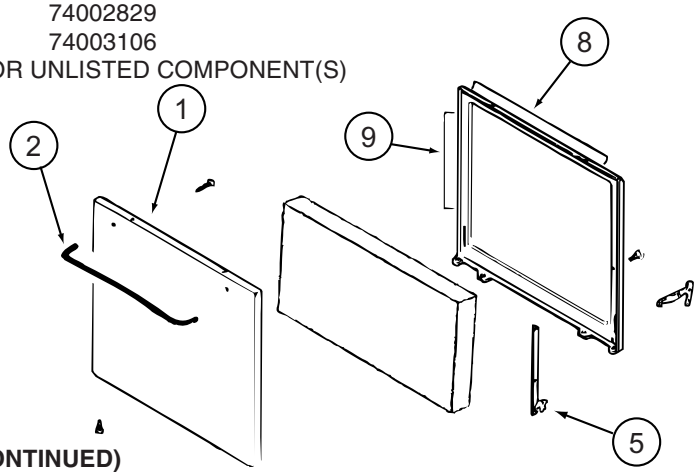

151277-01-01A (CONTINUED)

KEY	PART NUMBER	U/M	DESCRIPTION	VENDOR NO.
1	102022-01-704	EA	GLASS-OUTER	7902P261-60
1	112881-01-713	EA	DOOR/OVEN-TEXT/BLK NO WINDOW	2401F126-70
2	128727-01-701	EA	HANDLE - OVEN DOOR	74003929
5	151277-01-704	EA	HINGE KIT-OVEN DR/LT	12400028
5	151277-01-705	EA	HINGE KIT-OVEN DR/RT	12400029
8	126023-01-732	EA	SEAL/OVEN DR TOP	7212P014-60
9	135066-03-714	EA	SEAL - OVEN DOOR SIDES	7212P039-60

CONTACT WINNEBAGO PART SALES FOR UNLISTED COMPONENT(S)

COPYRIGHT © 2006 WINNEBAGO INDUSTRIES INC.

CHASSIS GROUP

FRAME

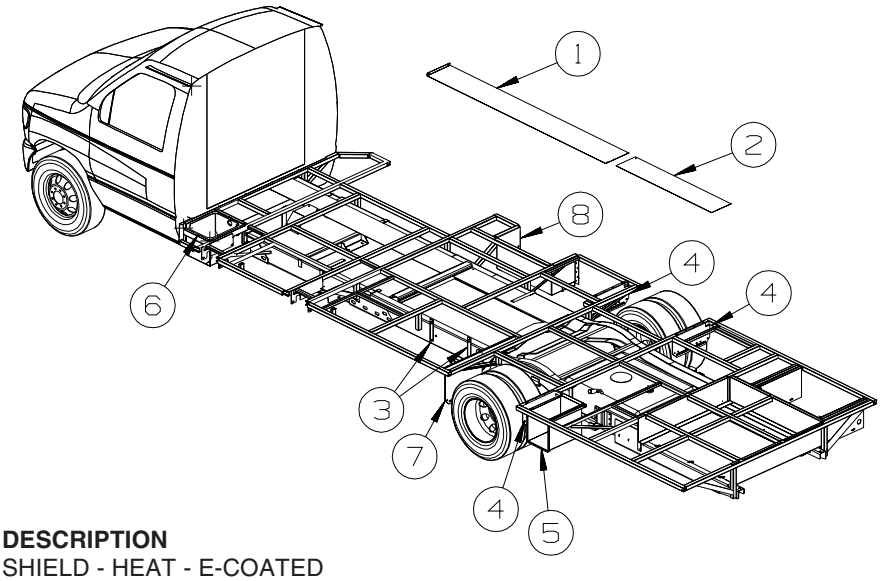

KEY	PART NUMBER	U/M	DESCRIPTION
1	135676-01-02B	EA	SHIELD - HEAT - E-COATED
2	145027-03-02B	EA	SHIELD - HEAT - E-COATED
			FROM: 00-00-00 THRU: 11-27-05
2	145027-01-02B	EA	SHIELD - HEAT - E-COATED
			FROM: 11-28-05 THRU: 99-99-99
3	147847-02-02B	EA	BRACKET - LP SUPPORT - E-COATED
4	152277-01-02B	EA	GUARD/ROCK - STEEL - W/BEND/2 NOTCHES - 18"W X 8.6"H
5	148015-01-02B	EA	COMPARTMENT - POWER CORD - E-COATED
6	148042-01-02B	EA	COMPARTMENT - BATTERY - E-COATED
7	136389-02-02B	EA	GUARD/ROCK - STEEL - W/BEND - 18"W X 14.9"H - E-COATED
8	143290-05-02B	EA	SUPPORT - STEP - E-COATED

DRIVETRAIN

KEY	PART NUMBER	U/M	DESCRIPTION
	103653-23-000	EA	BOLT - U-JOINT - 5/16-24 X .75 - 205", 215", 216", 220" WB
	103653-24-000	EA	STRAP - U-JOINT - 205", 215", 216", 220" WB
	152618-02-000	EA	DRIVESHAFT - BALANCED - 2 SECTION - 5 SPD/E450 - 168" WB
	152618-03-000	EA	DRIVESHAFT - BALANCED - 2 SECTION - 5 SPD/E450 - 182" WB
	152618-04-000	EA	DRIVESHAFT - BALANCED - 2 SECTION - 5 SPD/E450 - 190" WB
	152619-01-000	EA	DRIVESHAFT - BALANCED - 3 SECTION - 5 SPD/E450 - 205" WB
	152619-02-000	EA	DRIVESHAFT - BALANCED - 3 SECTION - 5 SPD/E450 - 215" WB
	152619-03-000	EA	DRIVESHAFT - BALANCED - 3 SECTION - 5 SPD/E450 - 216" WB
	152619-04-000	EA	DRIVESHAFT - BALANCED - 3 SECTION - 5 SPD/E450 - 220" WB

COPYRIGHT © 2006 WINNEBAGO INDUSTRIES INC.

CHASSIS GROUP (CONTINUED)

EXHAUST

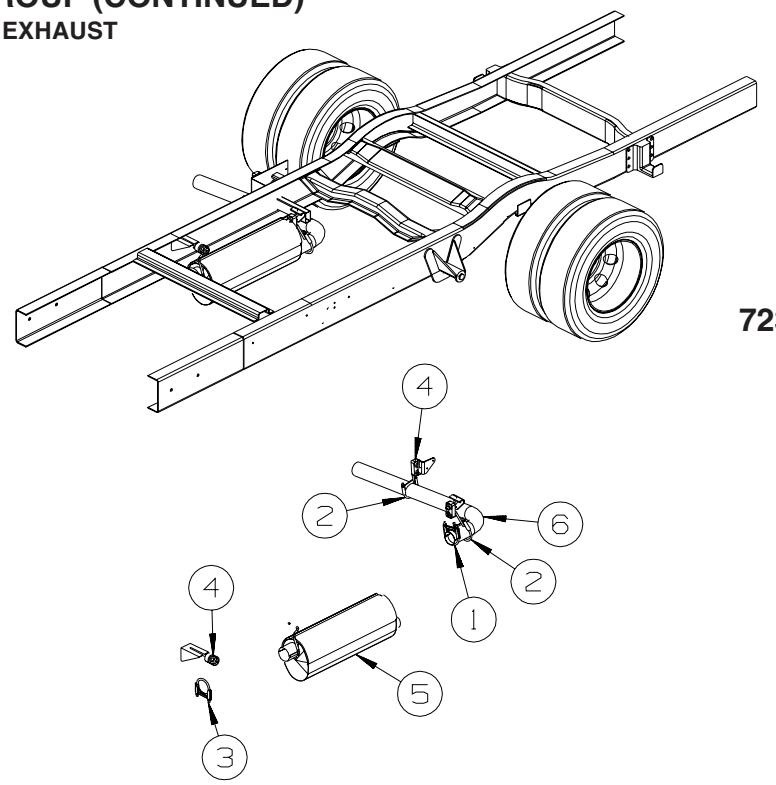

KEY	PART NUMBER	U/M	DESCRIPTION
1	094918-06-000	EA	CLAMP - EXHAUST - 3" - HEAVY DUTY
2	122392-02-02B	EA	HANGER - TAILPIPE - E-COATED
3	094918-01-000	EA	CLAMP - EXHAUST - 3" - GUILLOTINE STYLE
4	143811-01-000	EA	HANGER - EXHAUST - FORD F53
5	143929-01-000	EA	MUFFLER - EXHAUST
			FROM: 00-00-00 THRU: 08-04-05
5	143929-02-000	EA	MUFFLER - EXHAUST
			FROM: 08-05-05 THRU: 02-28-06
5	143929-04-000	EA	MUFFLER - EXHAUST
			FROM: 03-01-06 THRU: 99-99-99
6	148094-01-000	EA	PIPE - EXHAUST/TAIL

COPYRIGHT © 2006 WINNEBAGO INDUSTRIES INC.

CHASSIS GROUP (CONTINUED)

EXHAUST (CONTINUED)

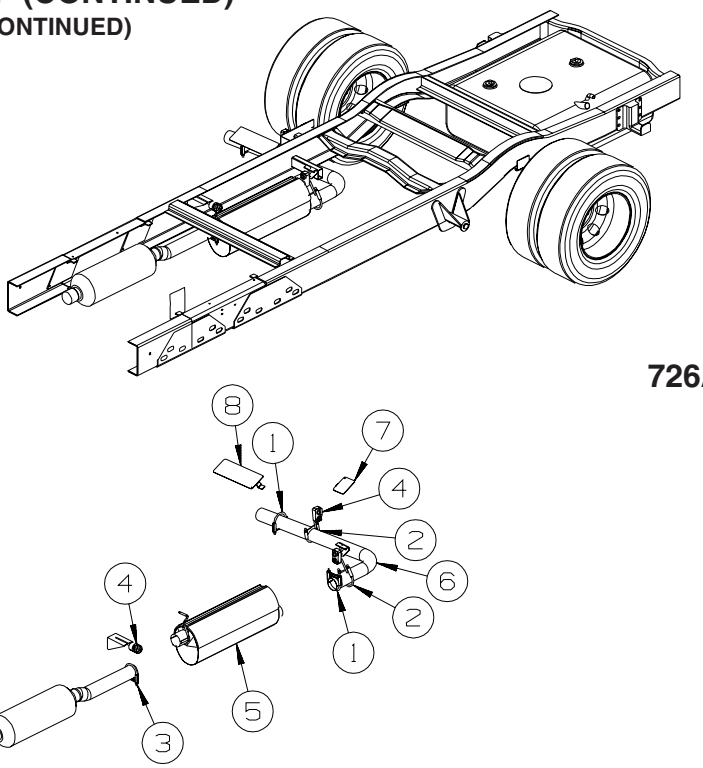

726A

KEY	PART NUMBER	U/M	DESCRIPTION
1	094918-06-000	EA	CLAMP - EXHAUST - 3" - HEAVY DUTY
2	122392-02-02B	EA	HANGER - TAILPIPE - E-COATED
3	094918-01-000	EA	CLAMP - EXHAUST - 3" - GUILLOTINE STYLE
4	143811-01-000	EA	HANGER - EXHAUST - FORD F53
5	143929-01-000	EA	MUFFLER - EXHAUST
			FROM: 00-00-00 THRU: 08-04-05
5	143929-02-000	EA	MUFFLER - EXHAUST
			FROM: 08-05-05 THRU: 02-28-06
5	143929-04-000	EA	MUFFLER - EXHAUST
			FROM: 03-01-06 THRU: 99-99-99
6	148094-02-000	EA	PIPE - EXHAUST/TAIL
7	143138-03-02B	EA	SHIELD - EXHAUST - E-COATED
8	143138-04-02B	EA	SHIELD - EXHAUST - E-COATED

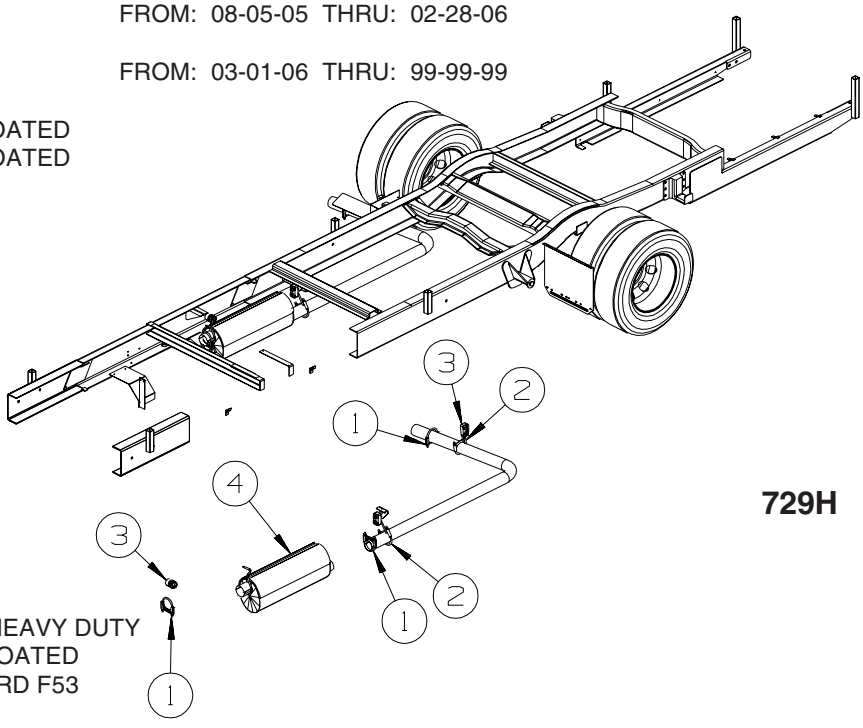

729H

KEY	PART NUMBER	U/M	DESCRIPTION
1	094918-06-000	EA	CLAMP - EXHAUST - 3" - HEAVY DUTY
2	122392-02-000	EA	HANGER - TAILPIPE - E-COATED
3	143811-01-000	EA	HANGER - EXHAUST - FORD F53
5	143929-01-000	EA	MUFFLER - EXHAUST
			FROM: 00-00-00 THRU: 08-04-05
5	143929-02-000	EA	MUFFLER - EXHAUST
			FROM: 08-05-05 THRU: 02-28-06
5	143929-04-000	EA	MUFFLER - EXHAUST
			FROM: 03-01-06 THRU: 99-99-99
5	148094-03-000	EA	PIPE - EXHAUST/TAIL
6	143138-03-02B	EA	SHIELD - EXHAUST - E-COATED
7	143138-04-02B	EA	SHIELD - EXHAUST - E-COATED

COPYRIGHT © 2006 WINNEBAGO INDUSTRIES INC.

CHASSIS GROUP (CONTINUED)

HITCH

KEY	PART NUMBER	U/M	DESCRIPTION
	148064-01-000	EA	DRAWBAR/HITCH - CLASS 3

723D

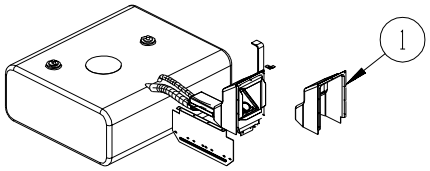

FUEL

KEY	PART NUMBER	U/M	DESCRIPTION
1	148654-01-10A	EA	SHROUD - FUEL FILL - UPPER - BLACK

726A, 729H

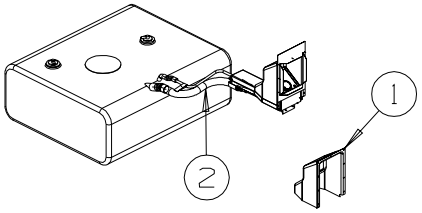

KEY	PART NUMBER	U/M	DESCRIPTION
1	148654-02-10A	EA	SHROUD - FUEL FILL - UPPER - BLACK
2	148650-02-000	EA	NECK - FILLER/MAIN/EXTENSION

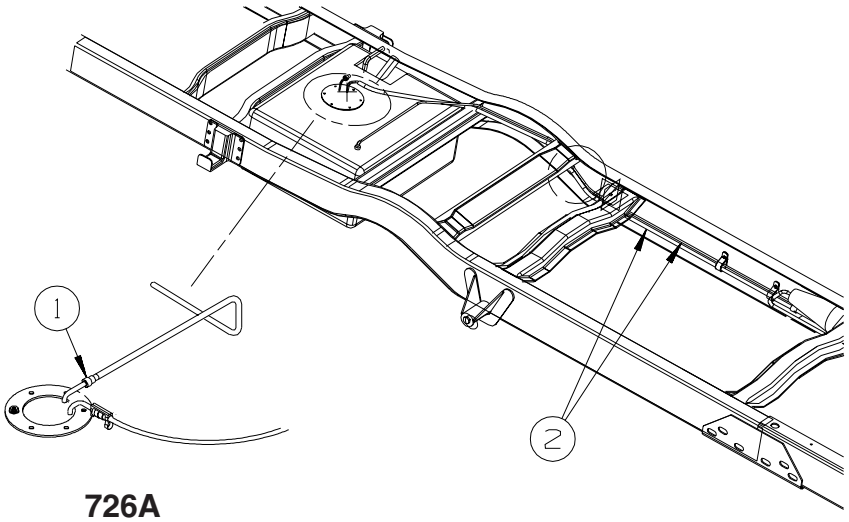

726A

KEY	PART NUMBER	U/M	DESCRIPTION
1	149468-01-000	EA	FITTING - F/FUEL-SENDING UNIT - 1/4"
2	106388-13-000	EA	FUEL LINE - FORD - 5/16 HP - FORD E450

729H

KEY	PART NUMBER	U/M	DESCRIPTION
1	149468-01-000	EA	FITTING - F/FUEL-SENDING UNIT - 1/4"
2	106388-12-000	EA	FUEL LINE - 5/16 HP - W/FEMALE CONNECTOR - 65.8"

COPYRIGHT © 2006 WINNEBAGO INDUSTRIES INC.

CHASSIS GROUP (CONTINUED)

SPARE TIRE

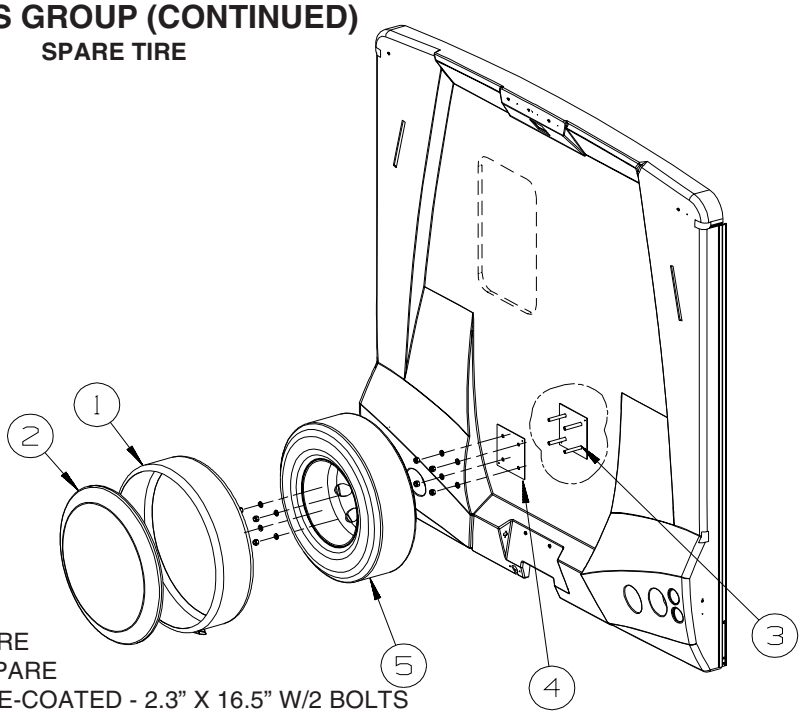

KEY	PART NUMBER	U/M	DESCRIPTION
1*	149703-01-01A	EA	RING - TIRE COVER - SPARE
2	149703-02-01A	EA	INSERT - TIRE COVER - SPARE
	151831-02-02B	EA	BRACKET - SPARE TIRE - E-COATED - 2.3” X 16.5” W/2 BOLTS FROM: 00-00-00 THRU: 04-25-05
3	155344-01-02B	EA	BRACKET/SUPPORT - SPARE TIRE - E-COATED FROM: 04-26-05 THRU: 99-99-99
4	155344-02-02B	EA	BRACKET/PLATE - E-COATED FROM: 04-26-05 THRU: 99-99-99
5	083425-14-000	EA	TIRE - LT225/75R16 LRE - MICHELIN LTX M/S
5	083617-04-000	EA	WHEEL - STEEL - 6" X 16" - FORD - 2004 CHASSIS
5	083617-05-000	EA	WHEEL-STL.16.0X6,06E350/450 , ACCURIDE 29943 - 2006 CHASSIS
	051377-04-000	EA	VALVE STEM - .5" X 2" - 2004 CHASSIS
	051377-07-000	EA	VALVE STEM - 2006 CHASSIS

***COMPONENT PARTS LISTED LATER IN THIS GROUP**

COMPONENT PARTS FOR SPARE TIRE

149703-01-01A

KEY	PART NUMBER	U/M	DESCRIPTION	VENDOR NO.
	149703-01-700	EA	CYLINDER LOCK/CAM/CLIP/2 KEY	CAM LOCK/CLIP/KEYS

SUSPENSION

KEY	PART NUMBER	U/M	DESCRIPTION
*	153119-01-000	EA	AIRSPRING - AIR BAG KIT - E450 UNDER RAIL MOUNT - 14,050 LB.GVWR, REAR AIR SPRINGS
*	153119-02-000	EA	AIRSPRING - AIR BAG KIT - E350 UNDER RAIL MOUNT - 11,500 LB.GVWR, REAR AIR SPRINGS

***COMPONENT PARTS LISTED LATER IN THIS GROUP**

COMPONENT PARTS FOR SUSPENSION

153119-01-000

KEY	PART NUMBER	U/M	DESCRIPTION	VENDOR NO.
	084096-01-708	EA	AIRLINE SERVICE KIT	W21-760-2012
	153119-01-700	EA	AIR SPRING (AIR BAG)	W217606397
	153119-01-701	EA	BRACKET - UPPER DRIVER	W217605440
	153119-01-702	EA	BRACKET - UPPER PASSENGER	W217605441
	153119-01-703	EA	BRACKET - LOWER	W217605439
	153119-01-704	EA	BRACE - UPPER DRIVER	W217605442
	153119-01-705	EA	BRACE - UPPER PASSENGER	W217605443
	153119-01-706	EA	STRAP/CLAMP - F/BRACKET	W217605433

153119-02-000

KEY	PART NUMBER	U/M	DESCRIPTION	VENDOR NO.
	084096-01-708	EA	AIRLINE SERVICE KIT	W21-760-2012
	135674-A1-701	EA	UPPER DRIVER BRACKET	5110 - FIRESTONE
	135674-A1-702	EA	UPPER PASSENGER BRACKET	5111 - FIRESTONE
	153119-02-700	EA	BRACKET - LOWER	W217605361
	153119-02-701	EA	STRAP/CLAMP - F/BRACKET	W217605360

COPYRIGHT © 2006 WINNEBAGO INDUSTRIES INC.

CHASSIS GROUP (CONTINUED)

WHEEL, TIRE, COVERS &/OR LINERS

KEY	PART NUMBER	U/M	DESCRIPTION
	051377-04-000	EA	VALVE STEM - .5" X 2"
	077030-01-000	EA	EXTENSION - VALVE STEM - 1.25" - METAL
	095012-05-000	EA	EXTENSION/VALVE STEM - LIVE - 5"
	095012-06-000	EA	STABILIZER/VALVE EXTENSION - LIVE - 2"
	080208-02-000	EA	BAR/LEVERAGE - LUG WRENCH - 13/16" DIA. - CHEVY/OSHKOSH
	080208-06-000	EA	LUG WRENCH - 1"/1.1" SOCKETS X 16.4" LONG
	112358-01-000	EA	WRENCH - LUG - 7/8" - L-SHAPE
	083425-14-000	EA	TIRE - LT225/75R16 LRE - MICHELIN LTX M/S
	083617-04-000	EA	WHEEL - STEEL - 6" X 16" - FORD
*	110435-13-000	EA	LINER - WHEEL - SET OF 4 - 16" (8 HOLE)
	149749-01-000	EA	WHEEL - ALUMINUM - 6" X 16" - FRONT - FORD E450
	149749-02-000	EA	WHEEL - ALUMINUM - 6" X 16" - REAR - FORD E450
	149749-03-000	EA	COVER/HUB - FRONT - FORD E450
	149749-04-000	EA	COVER/HUB - REAR - FORD E450
	149749-05-000	EA	COVER/NUT - FORD E450
	149749-06-000	EA	NUT/WHEEL - 9/16"-18 - LOW PROFILE - FORD E450

***COMPONENT PARTS LISTED LATER IN THIS GROUP**

COMPONENT PARTS FOR WHEEL, TIRE, COVERS &/OR LINERS

110435-13-000

KEY	PART NUMBER	U/M	DESCRIPTION	VENDOR NO.
	110435-01-711	EA	DECAL-CENTER CAP, 2"	2" DECAL
	110435-10-705	EA	TOOL/JAMB NUT INSTALLATION	V195P7-TOL
	110435-13-700	EA	LINER - WHEEL - FRONT	V160F7-FWC
	110435-13-701	EA	LINER - WHEEL - REAR	V160F7-RWC
	110435-13-702	EA	JAMB NUT W/COVER - 9/16"	V160F7-EJN

BRAKELINE

KEY	PART NUMBER	U/M	DESCRIPTION
	088498-01-000	EA	UNION - INVERTED FLARE - BRASS - 3/16 - FORD CHASSIS

COPYRIGHT © 2006 WINNEBAGO INDUSTRIES INC.

CURTAIN & CUSHION GROUP

NOTICE

IN ORDER TO ASSIST OUR PARTS SALES DEPT. IN PROVIDING INTERIOR SOFTWARE ITEMS, PLEASE INCLUDE THE SERIAL NUMBER AND THE COLOR CODE NUMBER FROM THE VEHICLE CERTIFICATION LABEL WHEN ORDERING. THIS LABEL IS LOCATED ON THE LEFT SIDEWALL AT THE END OF THE DASH (A-BODY),OR ON THE DRIVER'S DOOR LATCH PLATE (C-BODY).

AN EXAMPLE OF A COLOR CODE NUMBER IS B07, WHICH DESIGNATES AN OVERALL COLOR SCHEME OF A PARTICULAR UNIT. THE COLOR LISTED AFTER THE ITEM DESCRIPTION ON THE MICROFICHE, INDICATES THE OVERALL UNIT COLOR. ORDER THE ITEM YOU DESIRE ACCORDING TO UNIT COLOR CODE. IF ALL COLORS USE THE SAME ITEM NO COLOR CODE WILL BE NOTED.

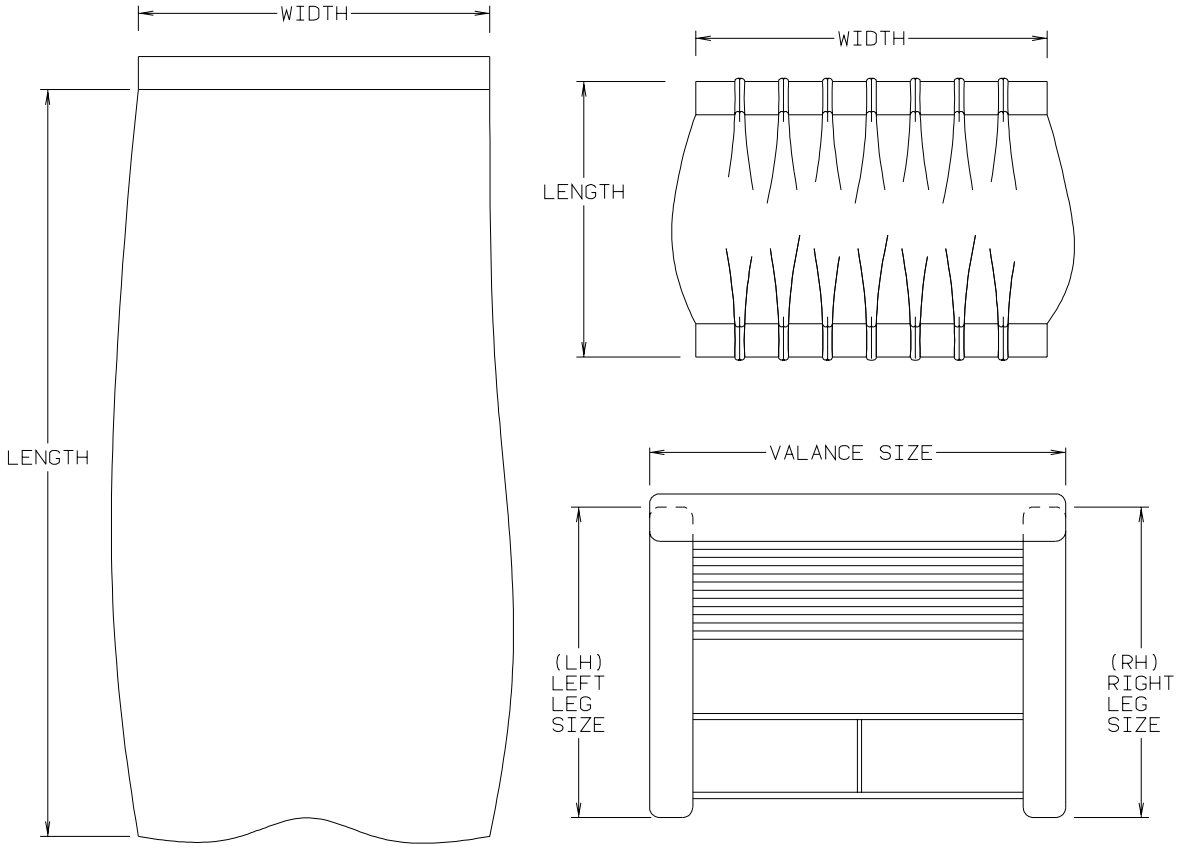

NOTE: USE THIS ILLUSTRATION WHEN DETERMINING LENGTH AND WIDTH MEASUREMENTS FOR CURTAINS. YOU WILL NOTE THE WIDTH MEASUREMENT IS TAKEN ON THE TOP OF THE CURTAIN WITH THE CURTAIN FULLY EXTENDED. THE LENGTH MEASUREMENT IS TAKEN FROM TOP TO BOTTOM. LEFT AND RIGHT WINDOW LEGS ARE DETERMINED WHEN FACING THE WINDOW.

COPYRIGHT © 2006 WINNEBAGO INDUSTRIES INC.

CURTAIN & CUSHION GROUP (CONTINUED)

CUSHION LAYOUT

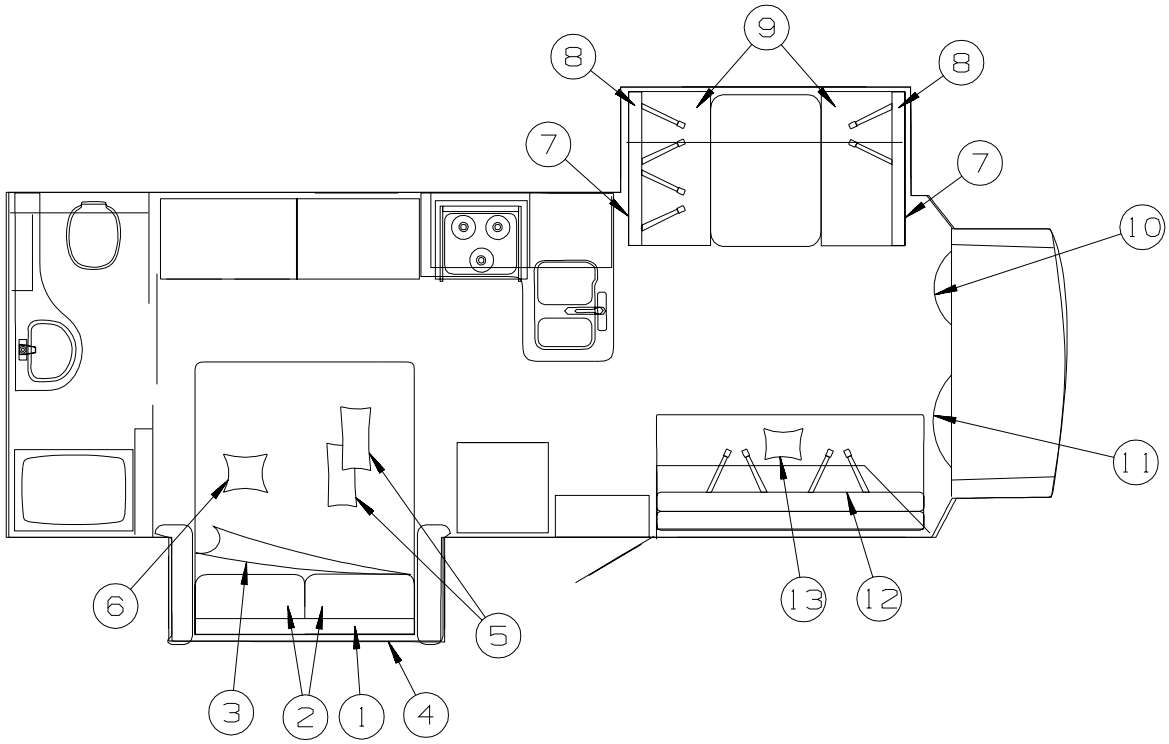

KEY	PART NUMBER	U/M	DESCRIPTION
1	157488-03-T47	EA	CUSHION - BIFOLD - SOFA/BED - 7.5" X 28" X 63" (T47, T48)
1	157488-03-T49	EA	CUSHION - BIFOLD - SOFA/BED - 7.5" X 28" X 63" (T49, T50)
1	157488-03-T51	EA	CUSHION - BIFOLD - SOFA/BED - 7.5" X 28" X 63" (T51, T52)
	157488-A3-T47	EA	COVER/CUSHION - BIFOLD - SOFA/BED - 7.5" X 28" X 63" (T47, T48)
	157488-A3-T49	EA	COVER/CUSHION - BIFOLD - SOFA/BED - 7.5" X 28" X 63" (T49, T50)
	157488-A3-T51	EA	COVER/CUSHION - BIFOLD - SOFA/BED - 7.5" X 28" X 63" (T51, T52)
2	157487-03-T47	EA	CUSHION - FILLER - 18" X 8" X 31.5" (T47, T48)
2	157487-03-T49	EA	CUSHION - FILLER - 18" X 8" X 31.5" (T49, T50)
2	157487-03-T51	EA	CUSHION - FILLER - 18" X 8" X 31.5" (T51, T52)
	157487-A3-T47	EA	COVER/CUSHION - FILLER - 18" X 8" X 31.5" (T47, T48)
	157487-A3-T49	EA	COVER/CUSHION - FILLER - 18" X 8" X 31.5" (T49, T50)
	157487-A3-T51	EA	COVER/CUSHION - FILLER - 18" X 8" X 31.5" (T51, T52)
3	157489-03-T47	EA	CUSHION - SOFA/BED - 47" X 63" X 5" (T47, T48)
3	157489-03-T49	EA	CUSHION - SOFA/BED - 47" X 63" X 5" (T49, T50)
3	157489-03-T51	EA	CUSHION - SOFA/BED - 47" X 63" X 5" (T51, T52)
	157489-A3-T47	EA	COVER/CUSHION - SOFA/BED - 47" X 63" X 5" (T47, T48)
	157489-A3-T49	EA	COVER/CUSHION - SOFA/BED - 47" X 63" X 5" (T49, T50)
	157489-A3-T51	EA	COVER/CUSHION - SOFA/BED - 47" X 63" X 5" (T51, T52)
4	157479-04-T47	EA	HEADBOARD - MARCUS - 30" X 60" (T47, T48)
4	157479-03-T49	EA	HEADBOARD - MARCUS - 30" X 60" (T49, T50)
4	157479-05-T51	EA	HEADBOARD - MARCUS - 30" X 60" (T51, T52)
5	104176-09-T47	EA	PILLOW SHAM - 30" (T47, T48)
5	104176-09-T49	EA	PILLOW SHAM - 30" (T49, T50)
5	104176-09-S44	EA	PILLOW SHAM - 30" (T51, T52)
6	155354-03-T47	EA	PILLOW - 18" (T47, T48)
6	155354-03-T49	EA	PILLOW - 18" (T49, T50)
6	155354-03-T51	EA	PILLOW - 18" (T51, T52)
7	111338-11-T47	EA	PAD - DINETTE SEATBACK (T47, T48)
7	111338-11-T49	EA	PAD - DINETTE SEATBACK (T49, T50)
7	111338-11-S44	EA	PAD - DINETTE SEATBACK (T51, T52)
7	111338-17-T41	EA	PAD - DINETTE SEATBACK - LEATHER (T47, T48) - ULTRALEATHER
7	111338-17-T43	EA	PAD - DINETTE SEATBACK (T49, T50, T51, T52) - ULTRALEATHER

COPYRIGHT © 2006 WINNEBAGO INDUSTRIES INC.

CURTAIN & CUSHION GROUP (CONTINUED)

CUSHION LAYOUT (CONTINUED)

KEY	PART NUMBER	U/M	DESCRIPTION
8	153670-12-T47	EA	CUSHION - SEAT BACK - 13.5" X 42" X 5" (T47, T48)
8	153670-01-T49	EA	CUSHION - SEAT BACK - 13.5" X 42" X 5" (T49, T50)
8	153670-01-T51	EA	CUSHION - SEAT BACK - 13.5" X 42" X 5" (T51, T52)
8	153670-08-T41	EA	CUSHION - SEAT BACK - 13.5" X 42" X 5" (T47, T48) - ULTRALEATHER
8	153670-08-T43	EA	CUSHION - SEAT BACK - 13.5" X 42" X 5" (T49, T50, T51, T52) - ULTRALEATHER
	P53670-12-T47	EA	COVER/BACK - 13.5" X 42" X 5" (T47, T48)
	P53670-01-T47	EA	COVER/BACK - 13.5" X 42" X 5" (T49, T50)
	P53670-01-T51	EA	COVER/BACK - 13.5" X 42" X 5" (T51, T52)
	P53670-08-T41	EA	COVER/BACK - 13.5" X 42" X 5" (T47, T48) - ULTRALEATHER
	P53670-08-T43	EA	COVER/BACK - 13.5" X 42" X 5" (T49, T50, T51, T52) - ULTRALEATHER
9	153671-07-T47	EA	CUSHION - SEAT - 23" X 42" X 5" (T47, T48)
9	153671-02-T49	EA	CUSHION - SEAT - 23" X 42" X 5" (T49, T50)
9	153671-02-T51	EA	CUSHION - SEAT - 23" X 42" X 5" (T51, T52)
9	153671-06-T41	EA	CUSHION - SEAT - 23" X 42" X 5" (T47, T48) - ULTRALEATHER
9	153671-06-T43	EA	CUSHION - SEAT - 23" X 42" X 5" (T49, T50, T51, T52) - ULTRALEATHER
	P53671-07-T47	EA	COVER/SEAT - 23" X 42" X 5" (T47, T48)
	P53671-02-T49	EA	COVER/SEAT - 23" X 42" X 5" (T49, T50)
	P53671-02-T51	EA	COVER/SEAT - 23" X 42" X 5" (T51, T52)
	P53671-06-T41	EA	COVER/SEAT - 23" X 42" X 5" (T47, T48) - ULTRALEATHER
	P53671-06-T43	EA	COVER/SEAT - 23" X 42" X 5" (T49, T50, T51, T52) - ULTRALEATHER
10	149587-01-T47	EA	SEAT - BUCKET/DRIVER (T47, T48)
10	149587-01-T49	EA	SEAT - BUCKET/DRIVER (T49, T50)
10	149587-01-S44	EA	SEAT - BUCKET/DRIVER (T51, T52)
10	149587-09-T16	EA	SEAT - BUCKET/DRIVER - LEATHER (T47, T48) - ULTRALEATHER
10	149587-09-T18	EA	SEAT - BUCKET/DRIVER (T49, T50, T51, T52) - ULTRALEATHER
11	149587-02-T47	EA	SEAT - BUCKET/PASSENGER (T47, T48)
11	149587-02-T49	EA	SEAT - BUCKET/PASSENGER (T49, T50)
11	149587-02-S44	EA	SEAT - BUCKET/PASSENGER (T51, T52)
11	149587-10-T16	EA	SEAT - BUCKET/PASSENGER - LEATHER (T47, T48) - ULTRALEATHER
11	149587-10-T18	EA	SEAT - BUCKET/PASSENGER (T49, T50, T51, T52) - ULTRALEATHER
12			SEE SOFA AREA
13	155354-01-T47	EA	PILLOW - 18" (T47, T48)
13	155354-02-T49	EA	PILLOW - 18" (T49, T50)
13	155354-02-T51	EA	PILLOW - 18" (T51, T52)

COPYRIGHT © 2006 WINNEBAGO INDUSTRIES INC.

CURTAIN & CUSHION GROUP (CONTINUED)

BUCKET SEATS

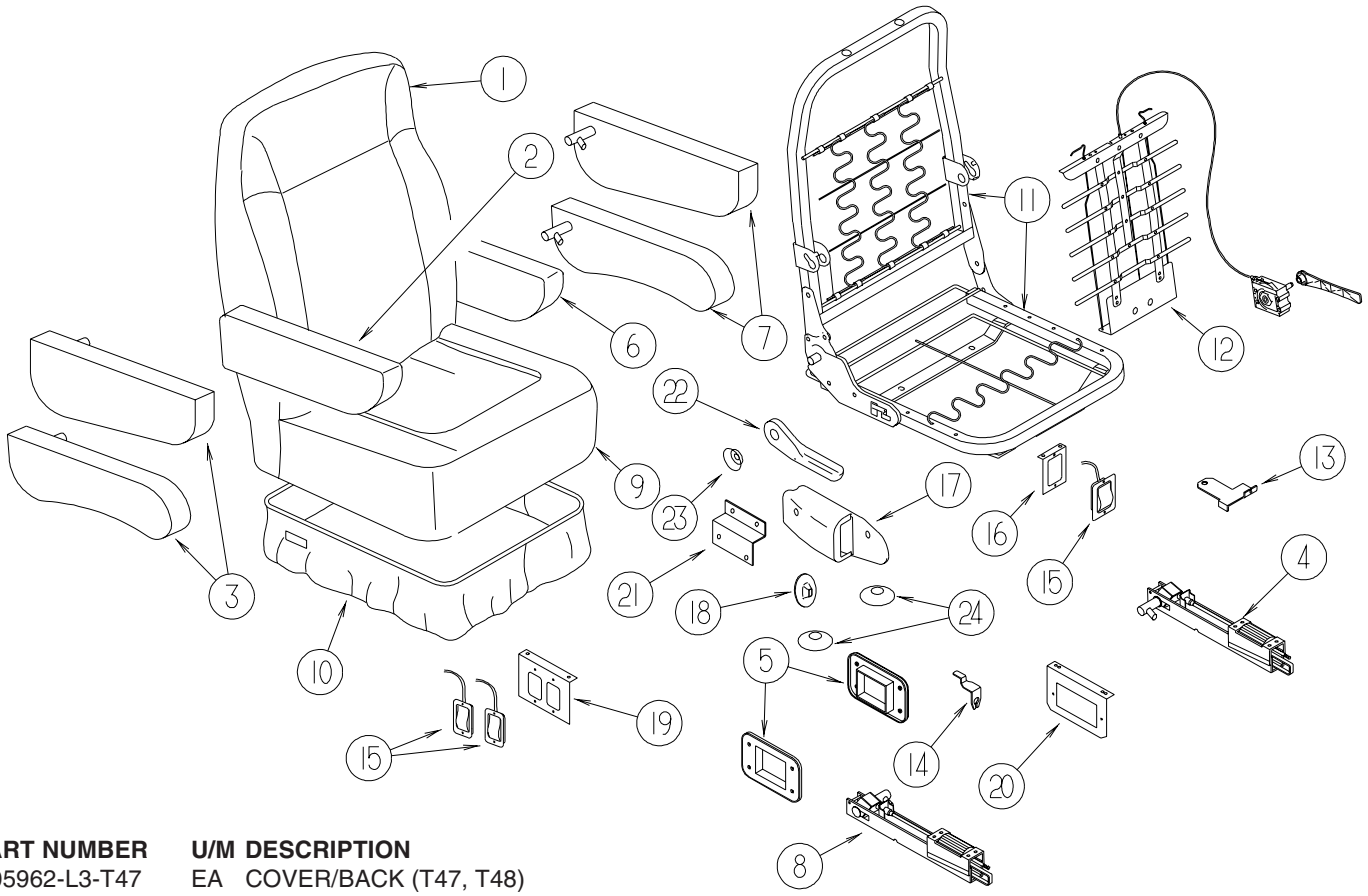

KEY	PART NUMBER	U/M	DESCRIPTION
1	M05962-L3-T47	EA	COVER/BACK (T47, T48)
1	M05962-L3-T49	EA	COVER/BACK (T49, T50)
1	M05962-L3-S44	EA	COVER/BACK (T51, T52)
1	M05962-T1-T16	EA	COVER/BACK - LEATHER (T47, T48) - ULTRALEATHER
1	M05962-T1-T18	EA	COVER/BACK (T49, T50, T51, T52) - ULTRALEATHER
2	129666-07-T47	EA	ARMREST - RIGHT HAND (T47, T48)
2	129666-07-T49	EA	ARMREST - RIGHT HAND (T49, T50)
2	129666-07-S44	EA	ARMREST - RIGHT HAND (T51, T52)
2	129666-09-T16	EA	ARMREST - RIGHT HAND (T47, T48) - ULTRALEATHER
2	129666-09-T18	EA	ARMREST - RIGHT HAND (T49, T50, T51, T52) - ULTRALEATHER
	P29666-07-T47	EA	COVER/ARMREST - RIGHT HAND (T47, T48)
	P29666-07-T49	EA	COVER/ARMREST - RIGHT HAND (T49, T50)
	P29666-07-S44	EA	COVER/ARMREST - RIGHT HAND (T51, T52)
	P29666-09-T16	EA	COVER/ARMREST - RIGHT HAND (T47, T48) - ULTRALEATHER
	P29666-09-T18	EA	COVER/ARMREST - RIGHT HAND (T49, T50, T51, T52) - ULTRALEATHER
3	130698-01-000	EA	ARMREST/MOLDED - RIGHT - W/O COVER
4	NOT USED		
5	NOT USED		
6	129666-08-T47	EA	ARMREST - LEFT HAND (T47, T48)
6	129666-08-T49	EA	ARMREST - LEFT HAND (T49, T50)
6	129666-08-S44	EA	ARMREST - LEFT HAND (T51, T52)
6	129666-10-T16	EA	ARMREST - LEFT HAND (T47, T48) - ULTRALEATHER
6	129666-10-T18	EA	ARMREST - LEFT HAND (T49, T50, T51, T52) - ULTRALEATHER
	P29666-08-T47	EA	COVER/ARMREST - LEFT HAND (T47, T48)
	P29666-08-T49	EA	COVER/ARMREST - LEFT HAND (T49, T50)
	P29666-08-S44	EA	COVER/ARMREST - LEFT HAND (T51, T52)
	P29666-10-T16	EA	COVER/ARMREST - LEFT HAND (T47, T48) - ULTRALEATHER
	P29666-10-T18	EA	COVER/ARMREST - LEFT HAND (T49, T50, T51, T52) - ULTRALEATHER
7	130698-02-000	EA	ARMREST/MOLDED - LEFT - W/O COVER
8	NOT USED		

COPYRIGHT © 2006 WINNEBAGO INDUSTRIES INC.

CURTAIN & CUSHION GROUP (CONTINUED)

BUCKET SEATS (CONTINUED)

KEY	PART NUMBER	U/M	DESCRIPTION
9	M05962-P0-T47	EA	COVER/SEAT - DRIVER (T47, T48)
9	M05962-P0-T49	EA	COVER/SEAT - DRIVER (T49, T50)
9	M05962-P0-S44	EA	COVER/SEAT - DRIVER (T51, T52)
9	M05962-T3-T16	EA	COVER/SEAT - W/SKIRT - DRIVER (T47, T48) - ULTRALEATHER
9	M05962-T3-T18	EA	COVER/SEAT - W/SKIRT - DRIVER (T49, T50, T51, T52) - ULTRALEATHER
9	M05962-N9-T47	EA	COVER/SEAT - PASSENGER (T47, T48)
9	M05962-N9-T49	EA	COVER/SEAT - PASSENGER (T49, T50)
9	M05962-N9-S44	EA	COVER/SEAT - PASSENGER (T51, T52)
9	M05962-T2-T16	EA	COVER/SEAT - W/SKIRT - PASSENGER (T47, T48) - ULTRALEATHER
9	M05962-T2-T18	EA	COVER/SEAT - W/SKIRT - PASSENGER (T49, T50, T51, T52) - ULTRALEATHER
10	NOT USED		
11	132875-04-000	EA	FRAME - LEFT HAND CHAIR/TAPERED BACK
11	132875-03-000	EA	FRAME - RIGHT HAND CHAIR/TAPERED BACK
12	NOT USED		
13	NOT USED		
14	NOT USED		
15	NOT USED		
16	NOT USED		
17	NOT USED		
18	NOT USED		
19	NOT USED		
20	NOT USED		
21	147457-01-02B	EA	BRACKET - ZEE W/HOLES - 2.8" - E-COATED
22	130802-02-000	EA	LEVER - RIGHT HAND
	130802-01-000	EA	LEVER - LEFT HAND
	130802-03-000	EA	SCREW F/LEVER
23	NOT USED		
24	007221-01-000	EA	SPACER - SEAT/ADJUSTER
	029134-01-000	EA	CLIP - FINISH - UPHOLSTERY

COPYRIGHT © 2006 WINNEBAGO INDUSTRIES INC.

CURTAIN & CUSHION GROUP (CONTINUED)

SOFA

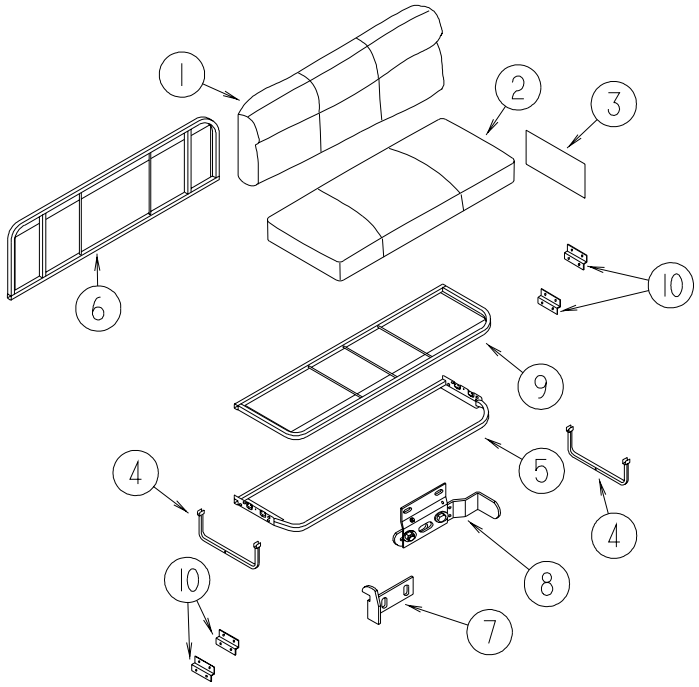

KEY	PART NUMBER	U/M	DESCRIPTION
1	149804-03-T47	EA	BACK - SOFA/BED - 70" (T47, T48)
1	149804-03-T49	EA	BACK - SOFA/BED - 70" (T49, T50)
1	149804-03-S44	EA	BACK - SOFA/BED - 70" (T51, T52)
1	149804-07-T41	EA	BACK - SOFA/BED - 70" (T47, T48) - ULTRALEATHER
1	149804-07-T43	EA	BACK - SOFA/BED - 70" (T49, T50, T51, T52) - ULTRALEATHER
	P49804-03-T47	EA	COVER - BACK - SOFA/BED - 70" (T47, T48)
	P49804-03-T49	EA	COVER - BACK - SOFA/BED - 70" (T49, T50)
	P49804-03-S44	EA	COVER - BACK - SOFA/BED - 70" (T51, T52)
	P49804-07-T41	EA	COVER - BACK - SOFA/BED - 70" (T47, T48) - ULTRALEATHER
	P49804-07-T43	EA	COVER - BACK - SOFA/BED - 70" (T49, T50, T51, T52) - ULTRALEATHER
2	149812-03-T47	EA	SEAT - SOFA/BED - 70" (T47, T48)
2	149812-03-T49	EA	SEAT - SOFA/BED - 70" (T49, T50)
2	149812-03-S44	EA	SEAT - SOFA/BED - 70" (T51, T52)
2	149812-07-T41	EA	SEAT - SOFA/BED - 70" (T47, T48) - ULTRALEATHER
2	149812-07-T43	EA	SEAT - SOFA/BED - 70" (T49, T50, T51, T52) - ULTRALEATHER
	P49812-03-T47	EA	COVER - SEAT - SOFA/BED - 70" (T47, T48)
	P49812-03-T49	EA	COVER - SEAT - SOFA/BED - 70" (T49, T50)
	P49812-03-S44	EA	COVER - SEAT - SOFA/BED - 70" (T51, T52)
	P49812-07-T41	EA	COVER - SEAT - SOFA/BED - 70" (T47, T48) - ULTRALEATHER
	P49812-07-T43	EA	COVER - SEAT - SOFA/BED - 70" (T49, T50, T51, T52) - ULTRALEATHER
3	NOT USED		
4	127335-07-000	EA	LEG - SOFA/BED - 8"
5	101085-12-000	EA	FRAME - BASE - SOFA/BED - 20" X 70"
6	101085-14-000	EA	FRAME - BACK - SOFA/BED - 16" X 67.5"
7	NOT USED		
8	NOT USED		
9	101085-13-000	EA	FRAME - SEAT - SOFA/BED - 27.25" X 70"
10	116104-04-02B	EA	BRACKET - ZEE W/HOLES - 3.2" - E-COATED
	118718-01-01A	EA	HOLDER/DRINK - COLLAPSIBLE MUG - BLACK PLASTIC

COPYRIGHT © 2006 WINNEBAGO INDUSTRIES INC.

CURTAIN & CUSHION GROUP (CONTINUED)

WINDOW TREATMENT

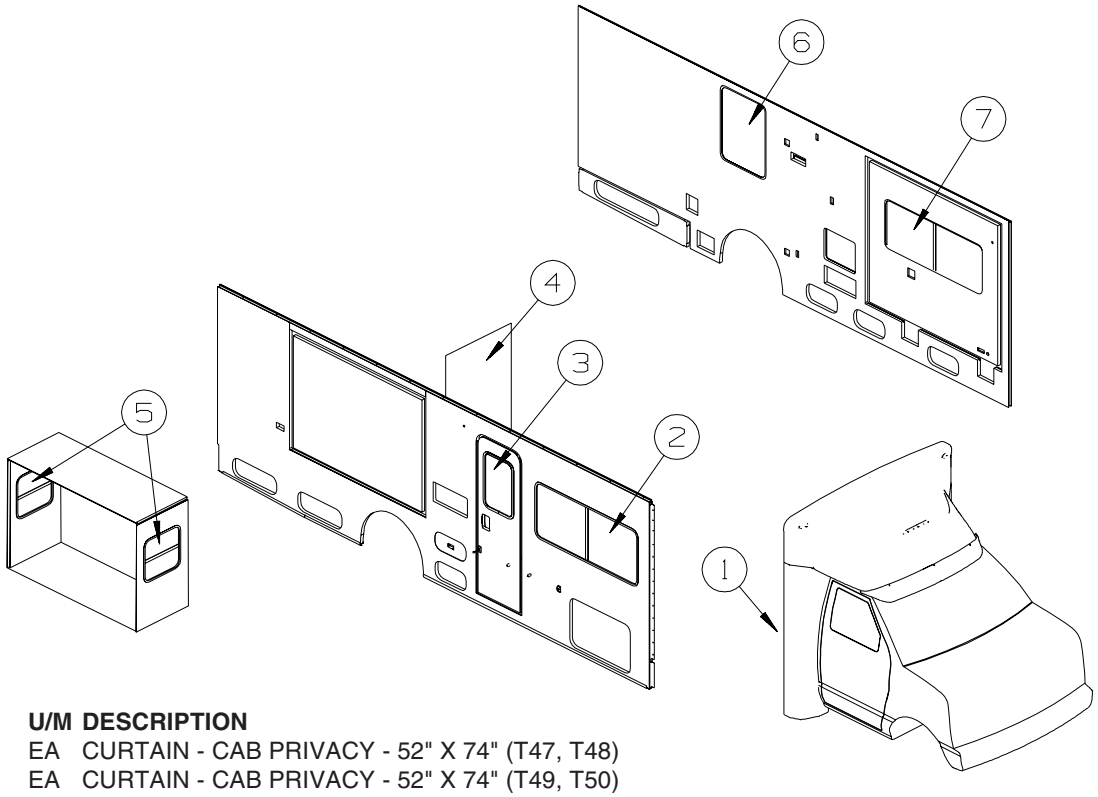

KEY	PART NUMBER	U/M	DESCRIPTION
1	076892-34-T47	EA	CURTAIN - CAB PRIVACY - 52" X 74" (T47, T48)
1	076892-34-T49	EA	CURTAIN - CAB PRIVACY - 52" X 74" (T49, T50)
1	076892-34-S44	EA	CURTAIN - CAB PRIVACY - 52" X 74" (T51, T52)
2	150530-45-T47	EA	VALANCE - ABBOTT - 65" (T47, T48)
2	150530-02-T49	EA	VALANCE - ABBOTT - 65" (T49, T50)
2	150530-02-T51	EA	VALANCE - ABBOTT - 65" (T51, T52)
2	152445-47-T47	EA	LEG - RIGHT - 27" (T47, T48)
2	152445-09-T49	EA	LEG - RIGHT - 27" (T49, T50)
2	152445-09-T51	EA	LEG - RIGHT - 27" (T51, T52)
2	152445-48-T47	EA	LEG - LEFT - 27" (T47, T48)
2	152445-10-T49	EA	LEG - LEFT - 27" (T49, T50)
2	152445-10-T51	EA	LEG - LEFT - 27" (T51, T52)
2	140789-14-S36	EA	BLIND - DAY/NIGHTER - 61" X 28.5" (T47, T48)
2	140789-14-N02	EA	BLIND - DAY/NIGHTER - 61" X 28.5" (T49, T50, T51, T52)
3	153643-39-T47	EA	VALANCE - MODERATE - 30" - W/CLOCK CUTOUT (T47, T48)
3	153643-40-T49	EA	VALANCE - MODERATE - 30" - W/CLOCK CUTOUT (T49, T50)
3	153643-40-T51	EA	VALANCE - MODERATE - 30" - W/CLOCK CUTOUT (T51, T52)
4	154002-02-T45	EA	CURTAIN - PRIVACY/BUNK/LINED - 53" X 65" (T47, T48)
4	154002-02-T49	EA	CURTAIN - PRIVACY/BUNK/LINED - 53" X 65" (T49, T50)
4	154002-02-T51	EA	CURTAIN - PRIVACY/BUNK/LINED - 53" X 65" (T51, T52)
5	150530-50-T47	EA	VALANCE - ABBOTT - 26.5" (T47, T48)
5	150530-04-T49	EA	VALANCE - ABBOTT - 26.5" (T49, T50)
5	150530-04-S44	EA	VALANCE - ABBOTT - 26.5" (T51, T52)
5	152664-11-T47	EA	LEG - RIGHT - 21.5" (T47, T48)
5	152664-49-T49	EA	LEG - RIGHT - 21.5" (T49, T50)
5	152664-49-T51	EA	LEG - RIGHT - 21.5" (T51, T52)
5	152664-12-T47	EA	LEG - LEFT - 21.5" (T47, T48)
5	152664-50-T49	EA	LEG - LEFT - 21.5" (T49, T50)
5	152664-50-T51	EA	LEG - LEFT - 21.5" (T51, T52)
5	140789-07-S46	EA	BLIND - DAY/NIGHTER - 22.5" X 23" (T47, T48)
5	140789-07-N02	EA	BLIND - DAY/NIGHTER - 22.5" X 23" (T49, T50, T51, T52)
6	150530-52-T47	EA	VALANCE - ABBOTT - 31.5" (T47, T48)
6	150530-53-T49	EA	VALANCE - ABBOTT - 31.5" (T49, T50)
6	150530-53-T51	EA	VALANCE - ABBOTT - 31.5" (T51, T52)
6	109041-88-02A	EA	BLIND - MINI - 30" X 39" (T47, T48)
6	109041-88-01A	EA	BLIND - MINI - 30" X 39" (T49, T50, T51, T52)

COPYRIGHT © 2006 WINNEBAGO INDUSTRIES INC.

CURTAIN & CUSHION GROUP (CONTINUED)

WINDOW TREATMENT (CONTINUED)

KEY	PART NUMBER	U/M	DESCRIPTION
7	150530-44-T47	EA	VALANCE - ABBOTT - 62" (T47, T48)
7	150530-01-T49	EA	VALANCE - ABBOTT - 62" (T49, T50)
7	150530-01-S44	EA	VALANCE - ABBOTT - 62" (T51, T52)
7	152445-07-T47	EA	LEG - RIGHT - 23.5" (T47, T48)
7	152445-11-T49	EA	LEG - RIGHT - 23.5" (T49, T50)
7	152445-11-T51	EA	LEG - RIGHT - 23.5" (T51, T52)
7	152445-08-T47	EA	LEG - LEFT - 23.5" (T47, T48)
7	152445-12-T49	EA	LEG - LEFT - 23.5" (T49, T50)
7	152445-12-T51	EA	LEG - LEFT - 23.5" (T51, T52)
7	140789-08-S46	EA	BLIND - DAY/NIGHTER - 59" X 26.5" (T47, T48)
7	140789-08-N02	EA	BLIND - DAY/NIGHTER - 59" X 26.5" (T49, T50, T51, T52)

COPYRIGHT © 2006 WINNEBAGO INDUSTRIES INC.

CURTAIN & CUSHION GROUP (CONTINUED)

HARDWARE

KEY	PART NUMBER	U/M	DESCRIPTION
1A	009700-04-002	EA	TRACK - CURTAIN - L-SHAPED - 15.5' - OFF WHITE - MINNIE WINNIE/SUNDANCER 400-SERIES
2A	009702-01-000	EA	END STOP - CURTAIN CARRIER - L ROD
3A	029155-01-000	EA	CAP - SNAP - 5/32" OUTSIDE DIAMETER OF PIN
4A	029156-01-000	EA	SOCKET - SNAP - 9/16" O.D.
5A	046867-02-000	EA	WASHER - HANDY BUTTON #3
6A	046867-03-000	EA	GROMMET - HANDY BUTTON #3
7A	075943-10-000	EA	BRACE - VALANCE - 20" - OFF WHITE
8A	083170-01-000	EA	BRACKET/BLIND - LEFT SIDE WHEN FACING WINDOW - CLEAR
9A	083170-02-000	EA	BRACKET/BLIND - RIGHT SIDE WHEN FACING WINDOW - CLEAR
10A	084434-01-000	EA	BRACKET - MOUNTING - ROLLER SHADE - 1 3/8"
11A	094896-02-000	EA	GROMMET - CORD/PLEATED BLIND - NYLON - GRAY
12A	094907-02-000	EA	END CAP - PLEATED BLIND/TOP - RH/LH - GRAY PLASTIC
13A	094907-04-000	EA	END CAP - PLEATED BLIND/BOTTOM - RH/LH
14A	094907-09-000	EA	END CAP/BLIND - CENTER RAIL - RH/LH
15A	097564-03-000	EA	HANDLE - KNOB - E-Z LIFT SHADE - TAN
	097593-02-000	FT	CORD - BLIND - PLEATED - GRAY
	097593-10-000	FT	CORD - BLIND - PLEATED - VANILLA
16A	097565-01-000	EA	BRACKET - MOUNTING - PLEATED BLIND
17A	097591-01-000	EA	SPRING - EXTENSION - PLEATED BLIND
17A	155748-01-000	EA	SPRING - EXTENSION - DAY/NIGHTER BLIND
18A	101031-01-000	YD	TAPE/GLIDE - 4.25" SPACING
19A	101033-02-000	EA	END CAP - LOW PROFILE TRACK - CLEAR FROM: 00-00-00 THRU: 09-04-05
	156172-04-01A	EA	END CAP - WALL TRACK - CLEAR FROM: 09-05-05 THRU: 99-99-99
20A	101033-08-000	EA	TRACK/WALL - 75" - FRT BUNK WINDOW OUTLOOK/SPIRIT 300-SERIES FROM: 00-00-00 THRU: 09-04-05
	156172-01-01A	EA	TRACK/WALL - 75" - BONE - FRT BUNK WINDOW OUTLOOK/SPIRIT 300-SERIES FROM: 09-05-05 THRU: 99-99-99
20A	101033-09-000	EA	TRACK - SIDE BUNK WDO OUTLOOK/SPIRIT 300/MINNIE WINNIE/SUNDANCER 400/VIEW/NAVION 500 FROM: 00-00-00 THRU: 09-04-05
	156172-02-01A	EA	TRACK - 32" - SIDE BUNK WINDOW OUTLOOK/SPIRIT 300-SER/MINNIE WINNIE/SUNDANCER 400-SER FROM: 09-05-05 THRU: 99-99-99
	156172-03-01A	EA	TRACK/WALL - 20" -BONE - SIDE BUNK WINDOW VIEW/NAVION 500-SERIES FROM: 09-05-05 THRU: 99-99-99
21A	102555-03-000	EA	BRACKET - (CLEAT TYPE) - F/BLIND HOLDOWN - MILKY WHITE

COPYRIGHT © 2006 WINNEBAGO INDUSTRIES INC.

CURTAIN & CUSHION GROUP (CONTINUED)

HARDWARE (CONTINUED)

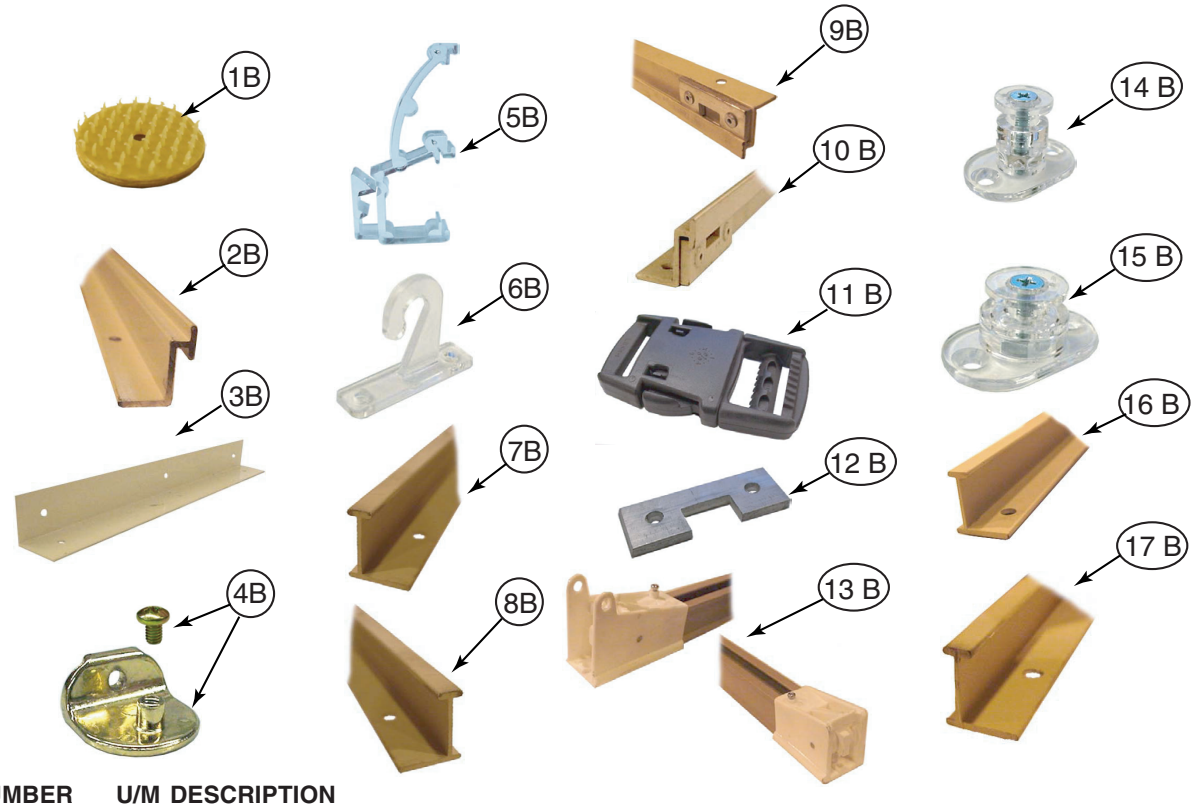

KEY	PART NUMBER	U/M	DESCRIPTION
1B	103242-01-000	EA	VELCRO HOOK - BEIGE 7/8" ROUND W/CENTER HOLE
	103242-02-000	EA	VELCRO HOOK - BLACK 7/8" ROUND W/CENTER HOLE
2B	105450-14-01A	EA	TRACK - CURTAIN - 90" - OFF WHITE - FRONT BUNK PRIVACY MINNIE/SPIRIT 300-SERIES
2B	105450-02-01A	EA	TRACK - CURTAIN - 48" - OFF WHITE - REAR PRIVACY MINNIE/SPIRIT 300-SERIES
2B	105450-08-01A	EA	TRACK - CURTAIN - 38" - OFF WHITE - REAR PRIVACY MINNIE/SPIRIT 300-SERIES
3B	105648-01-02A	EA	BRACE - VALANCE - 14" - OFF WHITE
4B	106544-01-000	EA	PULL - SHADE/BRASS
4B	106544-01-001	EA	SCREW - SHADE/BRASS
4B	106544-02-000	EA	PULL-SHADE - NICKEL
5B	109353-04-000	EA	CLIP - VALANCE SLAT MOUNTING - CLEAR PLASTIC
6B	109441-03-000	EA	BRACKET/HOOK - BLIND HOLD DOWN - NEW DESIGN/CLEAR
	109441-02-000	EA	SPACER/BRACKET - BLIND HOLD DOWN
7B	126456-03-05A	EA	TRACK/WRAPAROUND - PASSENGER - RIVERSTONE - ADVENTURER/SUNCRUISER G-SERIES
	126456-03-06A	EA	TRACK/WRAPAROUND - PASSENGER - CASHMERE - ADVENTURER/SUNCRUISER G-SERIES
8B	126456-04-05A	EA	TRACK/WRAPAROUND - DRIVER - RIVERSTONE - ADVENTURER/SUNCRUISER G-SERIES
	126456-04-06A	EA	TRACK/WRAPAROUND - DRIVER - CASHEMERE - ADVENTURER/SUNCRUISER G-SERIES
9B	127254-04-05A	EA	TRACK/WRAPARND-DRVR-GLACIER - SIGHTSEER/SUNOVA D-SERIES, VOYAGE/SUNRISE F-SERIES
10B	127254-14-03A	EA	TRACK/WRAPARND-PASS-GLACIER - SIGHTSEER/SUNOVA D-SERIES, VOYAGE/SUNRISE F-SERIES
11B	129491-01-000	EA	CATCH - SNAP HOOK - 1"
12B	130549-01-01A	EA	STOP - CURTAIN TRACK
13B	138460-07-03A	EA	TRACK - PASSENGER - RIVERSTONE- VECTRA/HORIZON S-SERIES/TOUR/ELLIPSE R-SERIES
	138460-07-04A	EA	TRACK - PASS ENGERY - CASHMERE- VECTRA/HORIZON S-SERIES/TOUR/ELLIPSE R-SERIES
13B	138460-08-03A	EA	TRACK - DRIVER - RIVERSTONE- VECTRA/HORIZON S-SERIES/TOUR/ELLIPSE R-SERIES
	138460-08-04A	EA	TRACK - DRIVER - CASHMERE- VECTRA/HORIZON S-SERIES/TOUR/ELLIPSE R-SERIES
14B	141634-01-000	EA	BRACKET-(BOBBIN TYPE) 7/8"H HOLDUPBASE(OVAL)-2 HOLE-CLEAR
15B	143805-01-000	EA	BRACKET-(BOBBIN TYPE) 1/2"H HOLDUPBASE(OVAL)-2 HOLES CLEAR
16B	146591-01-02A	EA	TRACK - CURTAIN - LEFT HAND - RIVERSTONE - JOURNEY/MERIDIAN P-SERIES
	146591-01-03A	EA	TRACK - CURTAIN - LEFT HAND - CASHMERE - JOURNEY/MERIDIAN P-SERIES
17B	146591-02-02A	EA	TRACK - CURTAIN - RIGHT HAND - RIVERSTONE - JOURNEY/MERIDIAN P-SERIES
	146591-02-03A	EA	TRACK - CURTAIN - RIGHT HAND - CASHMERE - JOURNEY/MERIDIAN P-SERIES
	154316-01-01A	EA	BRACE/ANGLE - W/HOLE - CASHMERE

CURTAIN & CUSHION GROUP (CONTINUED)

ACCESSORIES

KEY	PART NUMBER	U/M	DESCRIPTION
	057534-01-000	EA	TIEBACK - CLEAR PLASTIC - 6"
	070578-19-T47	EA	BUTTON - #30 - SCREW/STUD - VINYL COVERED (T47, T48)
	070578-19-T49	EA	BUTTON - #30 - SCREW/STUD - VINYL COVERED (T49, T50)
	070578-19-S44	EA	BUTTON - #30 - SCREW/STUD - VINYL COVERED (T51, T52)
	074494-04-000	EA	BUTTON - JOINED/PIVOT - W 3/4 TRACK
	118337-04-T47	EA	BUTTON - #60 - FABRIC COVERED (T47, T48)
	118337-04-T49	EA	BUTTON - #60 - FABRIC COVERED (T49, T50)
	118337-04-T51	EA	BUTTON - #60 - FABRIC COVERED (T51, T52)
	118337-05-T47	EA	BUTTON - #60 - FABRIC COVERED (T47, T48)
	118337-05-T49	EA	BUTTON - #60 - FABRIC COVERED (T49, T50)
	118337-05-T51	EA	BUTTON - #60 - FABRIC COVERED (T51, T52)
	118337-07-T47	EA	BUTTON - #60 - DOUBLE SIDED - FABRIC COVERED (T47, T48)
	118337-07-T49	EA	BUTTON - #60 - DOUBLE SIDED - FABRIC COVERED (T49, T50)
	118337-07-S44	EA	BUTTON - #60 - DOUBLE SIDED - FABRIC COVERED (T51, T52)

COPYRIGHT © 2006 WINNEBAGO INDUSTRIES INC.

CURTAIN & CUSHION GROUP (CONTINUED)

FABRICS

2006 FAMILY	T47/T48 MANGO TWIST	T49/T50 NIGHT MIST	T51/T52 EXPRESSO
BUCKET	562H BUCKET	562H BUCKET	562H BUCKET
	148797-H9-000	148797-H7-000	148797-17-000
	*OPT. LEATH/BUFF	*OPT. LEATH/PAPYRUS	*OPT. LEATH/PAPYRUS
	079680-47-000 (INSERT)	142523-02-000 (INSERT)	142523-02-000 (INSERT)
	154476-02-000(BOXING)	154476-01-000 (BOXING)	154476-01-000 (BOXING)
DINETTE	SQ CLUB/U-SHAPED	SQ CLUB/U-SHAPED	SQ CLUB/U-SHAPED
	148797-H8-000	148797-H6-000	148797-09-000
	*OPT. LEATH/BUFF	*OPT. LEATH/PAPYRUS	*OPT. LEATH/PAPYRUS
	079680-47-000 (INSERT)	142523-02-000 (INSERT)	142523-02-000 (INSERT)
	154476-02-000(BOXING)	154476-01-000 (BOXING)	154476-01-000 (BOXING)
DINETTE PADS/WRAP	148797-H9-000	148797-H7-000	148797-17-000
DINETTE PADS/WRAP (LEATHER OPT.)	154476-02-000	154476-01-000	154476-01-000
SOFA	695 BACK W/685 SEAT	695 BACK W/685 SEAT	695 BACK W/685 SEAT
	#325 STYLE JACK KNIFE	#325 STYLE JACK KNIFE	#325 STYLE JACK KNIFE
	148797-H9-000	148797-H6-000	148797-09-000
	*OPT. LEATH/BUFF	*OPT. LEATH/PAPYRUS	*OPT. LEATH/PAPYRUS
	079680-47-000 (INSERT)	142523-02-000 (INSERT)	142523-02-000 (INSERT)
	154476-02-000(BOXING)	154476-01-000 (BOXING)	154476-01-000 (BOXING)
LOUNGE CHAIR	465 CHAIR	465 CHAIR	465 CHAIR
	148797-H8-000	148797-H7-000	148797-17-000
	*OPT. LEATH/BUFF	*OPT. LEATH/PAPYRUS	*OPT. LEATH/PAPYRUS
	079680-47-000 (INSERT)	142523-02-000 (INSERT)	142523-02-000 (INSERT)
	154476-02-000(BOXING)	154476-01-000 (BOXING)	154476-01-000 (BOXING)
LOUNGE WINDOWS	ABBOTT VALANCE	ABBOTT VALANCE	ABBOTT VALANCE
	WRAP - 148797-H9-000	WRAP - 148797-H7-000	WRAP - 148797-09-000
	OVERLAY -148797-H8-000	OVERLAY - 148797-H6-000	OVERLAY - 148797-17-000
	BUTTONS - 148797-H9-000	BUTTONS - 148797-H7-000	BUTTONS - 148797-17-000
	LEGS - 148797-H8-000	LEGS - 148797-H7-000	LEGS - 148797-17-000
LOUNGE PILLOW	FRONT - 148797-H9/148797-H8	FRONT - 148797-H6/148797-H7	FRONT - 148797-09/148797-17
	BACK - 148797-H8-000	BACK - 148797-H7-000	BACK - 148797-17-000
	WELT - 148797-H9-000	WELT - 148797-H7-000	WELT - 148797-17-000
FWA, PRIVACY & OVHD. CURTAINS	137813-R9-000	137813-N0-000	137813-C7-000
DIVIDER CURTAIN	137813-R9/007270-03-000	137813-N0/007272-03-000	137813-C7/007272-03-000
DAY/NIGHTER	DESERT/PEARL	COTTON/WT. DECO	COTTON/WT. DECO
	094911-63/094911-64	094911-53/094911-50	094911-53/094911-50
GALLEY BLINDS	260 BEIGE	386 SNOCAP	386 SNOCAP

COPYRIGHT © 2006 WINNEBAGO INDUSTRIES INC.

CURTAIN & CUSHION GROUP (CONTINUED)
FABRICS (CONTINUED)

2006 FAMILY	T47/T48 MANGO TWIST	T49/T50 NIGHT MIST	T51/T52 EXPRESSO
BEDROOM WDO TREATMENT	ABBOTT VALANCE	ABBOTT VALANCE	ABBOTT VALANCE
	WRAP - 148797-H8-000	WRAP - 148797-H6-000	WRAP - 148797-09-000
	OVERLAY -137813-R9-000	OVERLAY -137813-N0-000	OVERLAY - 137813-C7-000
	BUTTONS - 148797-H8-000	BUTTONS - 148797-H6-000	BUTTONS - 148797-09-000
	LEGS - 148797-H8-000	LEGS - 148797-H6-000	LEGS - 148797-09-000
BEDCOVER	BEDCAP W/1/2" N-G WELT	BEDCAP W/1/2" N-G WELT	BEDCAP W/1/2" N-G WELT
	137813-R9-000	137813-N0-000	137813-C7-000
QUILT PATTERN	DIAMOND	DIAMOND	DIAMOND
SHAMS	1/2" NON-GATH. WELT	1/2" NON-GATH. WELT	1/2" NON-GATH. WELT
	SHAM - 148797-H8-000	SHAM - 148797-H6-000	SHAM - 148797-09-000
	WELT - 137813-R9-000	WELT - 137813-N0-000	WELT - 137813-C7-000
BED PILLOW	18x18" SQUARE	18x18" SQUARE	18x18" SQUARE
	FRONT - 137813-R9/148797-H8	FRONT - 137813-N0/148797-H6	FRONT - 137813-C7/148797-09
	BACK/WELT - 148797-H8-000	BACK/WELT - 148797-H6-000	BACK - 148797-09-000
CARPET	096060-J7-000	152251-05-06A	152251-05-02A
	SAHARA DESERT	CAST IRON	BURLWOOD
CEILING FABRIC	113979-09-01A 102"	113979-09-01A 102"	113979-09-01A 102"
	113979-10-10A 21.5"	113979-10-10A 21.5"	113979-10-10A 21.5"

COPYRIGHT © 2006 WINNEBAGO INDUSTRIES INC.

DRIVERS COMPARTMENT GROUP

FRONT INTERIOR

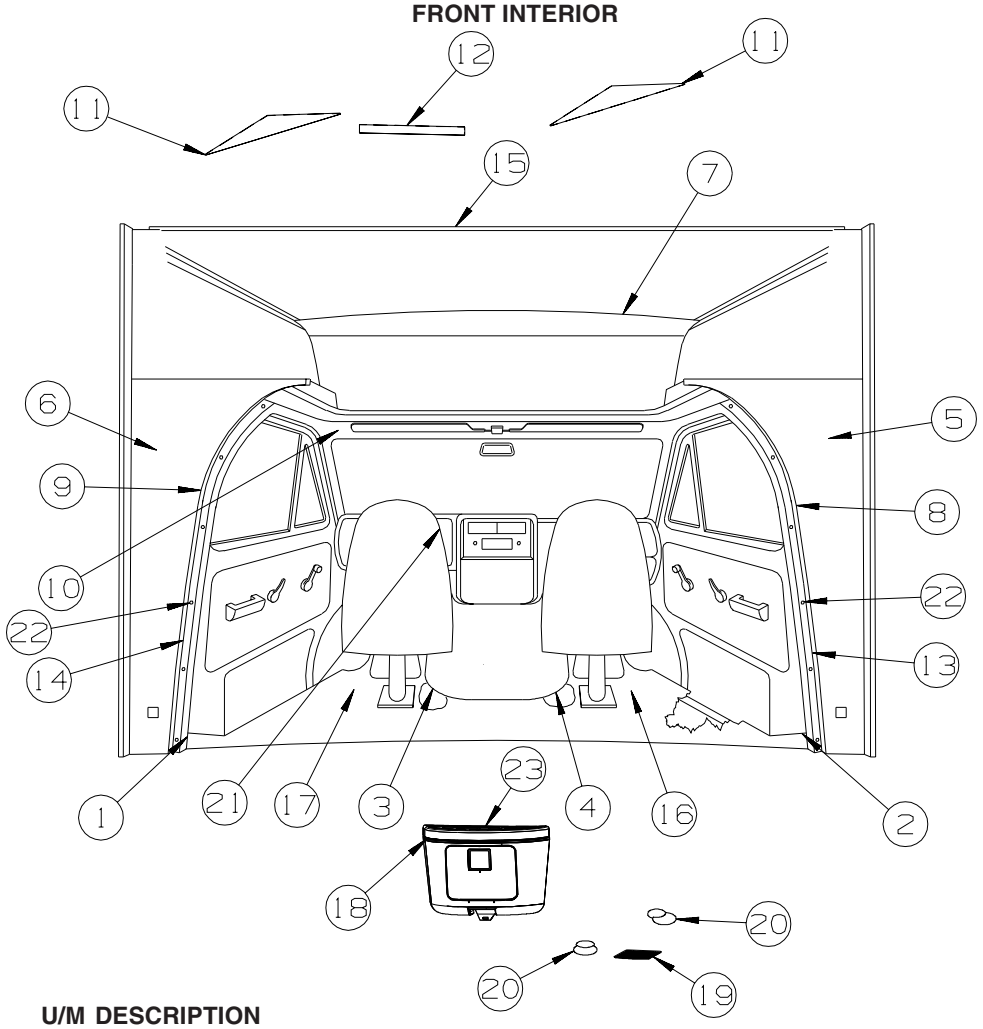

KEY	PART NUMBER	U/M	DESCRIPTION
1	106431-03-13A	EA	COVER - SEATBELT RECOIL - DRIVER - VW GREY - MEDIUM FLINT
1	106431-03-23A	EA	COVER - SEATBELT RECOIL - DRIVER - PEBBLE - MEDIUM PEBBLE
2	106431-04-13A	EA	COVER - SEATBELT RECOIL - PASSENGER - VW GREY - MEDIUM FLINT
2	106431-04-23A	EA	COVER - SEATBELT RECOIL - PASSENGER - PEBBLE - MEDIUM PEBBLE
3	135426-01-000	EA	INSULATION-FLOOR,CAB,LH
4	135426-02-000	EA	INSULATION-FLOOR,CAB,RH
5	149336-03-T47	EA	PANEL/TRANSITION - INNER - RIGHT HAND (T47, T48)
5	149336-03-T49	EA	PANEL/TRANSITION - INNER - RIGHT HAND (T49, T50)
5	149336-03-T51	EA	PANEL/TRANSITION - INNER - RIGHT HAND (T51, T52)
6	149336-04-T47	EA	PANEL/TRANSITION - INNER - LEFT HAND (T47, T48)
6	149336-04-T49	EA	PANEL/TRANSITION - INNER - LEFT HAND (T49, T50)
6	149336-04-T51	EA	PANEL/TRANSITION - INNER - LEFT HAND (T51, T52)
7	149411-02-T47	EA	TRIM/REAR CAB - FABRIC WRAPPED - 47.7" (T47, T48)
7	149411-02-T49	EA	TRIM/REAR CAB - FABRIC WRAPPED - 47.7" (T49, T50)
7	149411-02-T51	EA	TRIM/REAR CAB - FABRIC WRAPPED - 47.7" (T51, T52)
8	149530-03-T47	EA	TRIM - B-PILLAR - RIGHT HAND (T47, T48)
8	149530-03-T49	EA	TRIM - B-PILLAR - RIGHT HAND (T49, T50)
8	149530-03-T51	EA	TRIM - B-PILLAR - RIGHT HAND (T51, T52)
9	149530-04-T47	EA	TRIM - B-PILLAR - LEFT HAND (T47, T48)
9	149530-04-T49	EA	TRIM - B-PILLAR - LEFT HAND (T49, T50)
9	149530-04-T51	EA	TRIM - B-PILLAR - LEFT HAND (T51, T52)
10	149948-01-01A	EA	HEADLINER - WITH DOME LIGHT - FORD - MEDIUM FLINT
10	149948-01-02A	EA	HEADLINER - WITH DOME LIGHT - FORD - PEBBLE - MEDIUM PEBBLE
11	150149-03-T47	EA	TRIM - ENTERTAINMENT CENTER/BOTTOM - FABRIC WRAPPED -36.7" (T47, T48)
11	150149-03-T49	EA	TRIM - ENTERTAINMENT CENTER/BOTTOM - FABRIC WRAPPED -36.7" (T49, T50)
11	150149-03-T51	EA	TRIM - ENTERTAINMENT CENTER/BOTTOM - FABRIC WRAPPED -36.7" (T51, T52)
12	150149-04-T47	EA	TRIM - ENTERTAINMENT CENTER/BOTTOM - FABRIC WRAPPED -29.1" (T47, T48)
12	150149-04-T49	EA	TRIM - ENTERTAINMENT CENTER/BOTTOM - FABRIC WRAPPED -29.1" (T49, T50)
12	150149-04-T51	EA	TRIM - ENTERTAINMENT CENTER/BOTTOM - FABRIC WRAPPED -29.1" (T51, T52)
13	150481-01-13A	EA	TRIM - B-PILLAR - RIGHT HAND - MEDIUM FLINT
13	150481-01-23A	EA	TRIM - B-PILLAR - RIGHT HAND - PEBBLE - MEDIUM PEBBLE

COPYRIGHT © 2006 WINNEBAGO INDUSTRIES INC.

DRIVERS COMPARTMENT GROUP (CONTINUED)

FRONT INTERIOR (CONTINUED)

KEY	PART NUMBER	U/M	DESCRIPTION
14	150481-02-13A	EA	TRIM - B-PILLAR - LEFT HAND - MEDIUM FLINT
14	150481-02-23A	EA	TRIM - B-PILLAR - LEFT HAND - PEBBLE - MEDIUM PEBBLE
15	150793-01-S34	EA	MOLDING - HARDWOOD-W/NOTCH - 1.4"X 91.8" - WASHED MAPLE
15	150793-01-S35	EA	MOLDING - HARDWOOD-W/NOTCH - 1.4"X 91.8" - SIERRA MAPLE
16	125780-03-000	EA	MAT - FLOOR - FRONT PASSENGER - “I” - FORD (GRAY) - MEDIUM FLINT
16	155266-03-01A	EA	MAT - FLOOR - FRONT PASSENGER - “I” - FORD - PEBBLE BROWN - MEDIUM PEBBLE
17	125780-04-000	EA	MAT - FLOOR - FRONT DRIVER - “I” - FORD (GRAY) - MEDIUM FLINT
17	155266-04-01A	EA	MAT - FLOOR - FRONT DRIVER - “I” - FORD - PEBBLE BROWN - MEDIUM PEBBLE
18	147623-01-01A	EA	TRAY - BEVERAGE - W/LOWER POCKET (TRIMLINE CONSOLE) GRAY - MEDIUM FLINT
18	147623-01-02A	EA	TRAY - BEVERAGE - W/LOWER POCKET (TRIMLINE CONSOLE) PEBBLE - MEDIUM PEBBLE
19	151391-01-01A	EA	PAD/TRAY - BEVERAGE TRAY
20	151391-02-01A	EA	PAD/CUP - BEVERAGE TRAY
21	150974-01-02A	EA	APPLIQUE - I P - MIDNIGHT LASER WAVE - MEDIUM FLINT - INSTRUMENT PANEL APPLIQUE
21	150974-01-05A	EA	APPLIQUE - BEZEL - I P - REGAL BURLWOOD - MEDIUM PEBBLE - INSTRUMENT PANEL APPLIQUE
22	070578-19-T47	EA	BUTTON - #30 - SCREW/STUD - VINYL COVERED (T47, T48)
22	070578-19-T49	EA	BUTTON - #30 - SCREW/STUD - VINYL COVERED (T49, T50)
22	070578-19-S44	EA	BUTTON - #30 - SCREW/STUD - VINYL COVERED (T51, T52)
23	150974-02-02A	EA	APPLQ - MTR CVR - MIDNIGHT LSR WAVE - MEDIUM FLINT - INSTRUMENT PANEL APPLIQUE
23	150974-02-05A	EA	APPLIQ - BZL - MTR CVR - REGAL BURLWOOD - MEDIUM PEBBLE - INSTRUMENT PANEL APPLIQUE

COPYRIGHT © 2006 WINNEBAGO INDUSTRIES INC.

DRIVERS COMPARTMENT GROUP (CONTINUED)

CABINETS

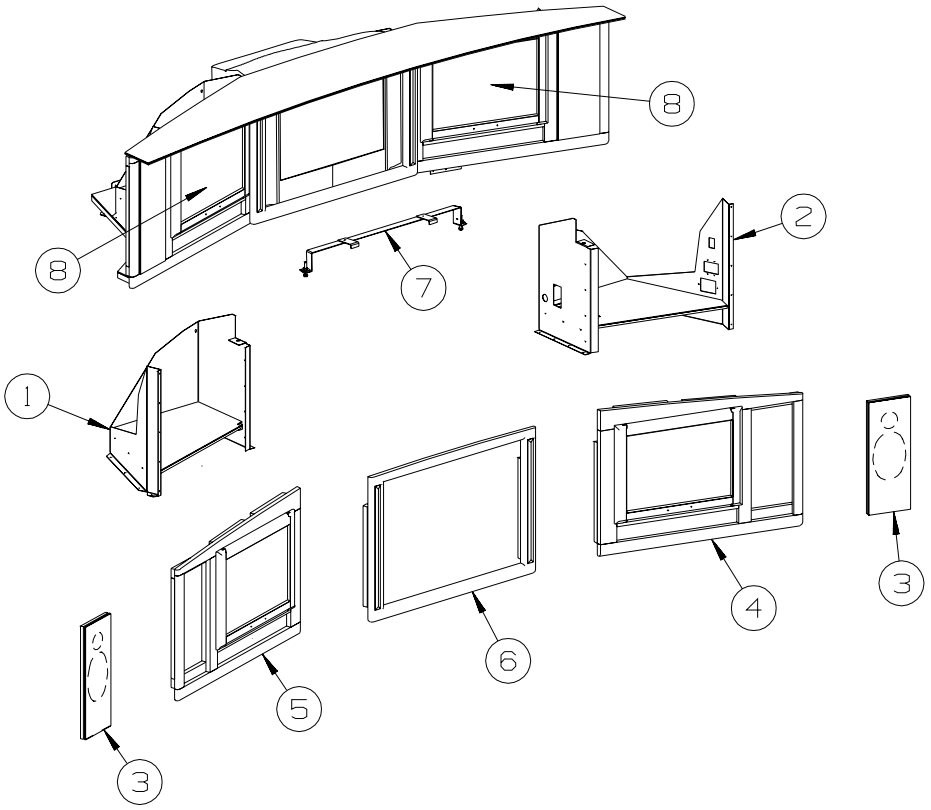

FROM: 00-00-00
THRU: 04-17-05

KEY	PART NUMBER	U/M	DESCRIPTION
1	149487-02-02B	EA	COMPARTMENT/OVERHEAD - FRONT/LH HAND - E-COATED
2	149487-03-02B	EA	COMPARTMENT/OVERHEAD - FRONT/RH HAND - E-COATED
3	149457-13-T47	EA	COVER/PANEL - FABRIC INSERT (T47, T48)
3	149457-13-T49	EA	COVER/PANEL - FABRIC INSERT (T49, T50)
3	149457-13-S44	EA	COVER/PANEL - FABRIC INSERT (T51, T52)
3	149457-14-T47	EA	COVER/PANEL - FABRIC INSERT (T47, T48) - SND SYS. DLX. W/Q-SRND
3	149457-14-T49	EA	COVER/PANEL - FABRIC INSERT (T49, T50) - SND SYS. DLX. W/Q-SRND
3	149457-14-S44	EA	COVER/PANEL - FABRIC INSERT (T51, T52) - SND SYS. DLX. W/Q-SRND
4	149457-18-S34	EA	FACE/FRAME (PIC) OVHD/PASS - W/O FAB INSRT/HDW - WASHED MAPLE
4	149457-18-S35	EA	FACE/FRAME (PIC) OVHD/PASS - W/O FAB INSRT/HDW - SIERRA MAPLE
5	149457-19-S34	EA	FACE/FRAME (PIC) OVHD/PASS - W/O FAB INSRT/HDW - WASHED MAPLE
5	149457-19-S35	EA	FACE/FRAME (PIC) OVHD/PASS - W/O FAB INSRT/HDW - SIERRA MAPLE
6	149407-02-S34	EA	FRAME/FACE - F/TV - WASHED MAPLE
6	149407-02-S35	EA	FRAME/FACE - F/TV - WASHED MAPLE
7	144148-05-02B	EA	BRACKET - TIEDOWN/TV - E-COATED
7	151954-03-02B	EA	BRACKET/HOLD DOWN - TV - E-COATED - SND SYS. DLX. W/Q-SRND
8	146028-26-T47	EA	DOOR - GLASS INSERT/PENCIL EDGE - 15.7" X 21.8" - W/O HDW - WASHED MAPLE
8	146028-26-T48	EA	DOOR - GLASS INSERT/PENCIL EDGE - 15.7" X 21.8" - W/O HDW - SIERRA MAPLE

COPYRIGHT © 2006 WINNEBAGO INDUSTRIES INC.

DRIVERS COMPARTMENT GROUP (CONTINUED)

CABINETS (CONTINUED)

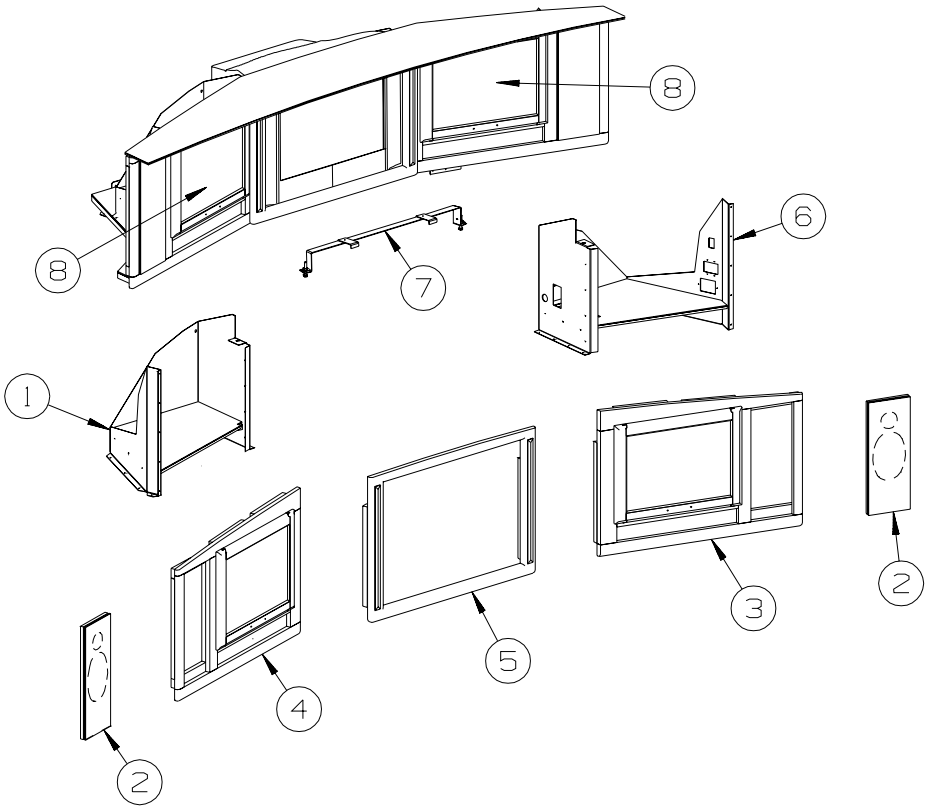

FROM: 04-18-05
THRU: 99-99-99

KEY	PART NUMBER	U/M	DESCRIPTION
1	149487-02-02B	EA	COMPARTMENT/OVERHEAD - FRONT/LH HAND - E-COATED
2	149457-13-T41	EA	COVER/PANEL - FABRIC INSERT (T41, T42)
2	149457-13-T43	EA	COVER/PANEL - FABRIC INSERT (T43, T44)
2	149457-13-S38	EA	COVER/PANEL - FABRIC INSERT (T45, T46)
3	149457-18-S34	EA	FACE/FRAME (PICTURE) OVERHEAD/PASS - W/O FABRIC INSERT/HDW - WASHED MAPLE
3	149457-18-S35	EA	FACE/FRAME (PICTURE) OVERHEAD/PASS - W/O FABRIC INSERT/HDW - SIERRA MAPLE
4	149457-19-S34	EA	FACE/FRAME (PICTURE) OVERHEAD/PASS - W/O FABRIC INSERT/HDW - WASHED MAPLE
4	149457-19-S35	EA	FACE/FRAME (PICTURE) OVERHEAD/PASS - W/O FABRIC INSERT/HDW - SIERRA MAPLE
5	149407-02-S34	EA	FRAME/FACE - F/TV - WASHED MAPLE
5	149407-02-S35	EA	FRAME/FACE - F/TV - SIERRA MAPLE
6	149487-03-02B	EA	COMPARTMENT/OVERHEAD - FRONT/RH HAND - E-COATED
7	151954-03-02B	EA	BRACKET/HOLD DOWN - TV - E-COATED
8	146028-80-T41	EA	DOOR - GLASS INSERT/OGEE EDGE - 15.7" X 20.4" - W/O HDW - WASHED MAPLE
8	146028-80-T42	EA	DOOR - GLASS INSERT/OGEE EDGE - 15.7" X 20.4" - W/O HDW - SIERRA MAPLE
	152665-01-01A	EA	CAP - TUBE - 3/4" X 3/4" X 1" - RUBBER/BLACK

COPYRIGHT © 2006 WINNEBAGO INDUSTRIES INC.

ELECTRICAL GROUP

110V BODY WIRING

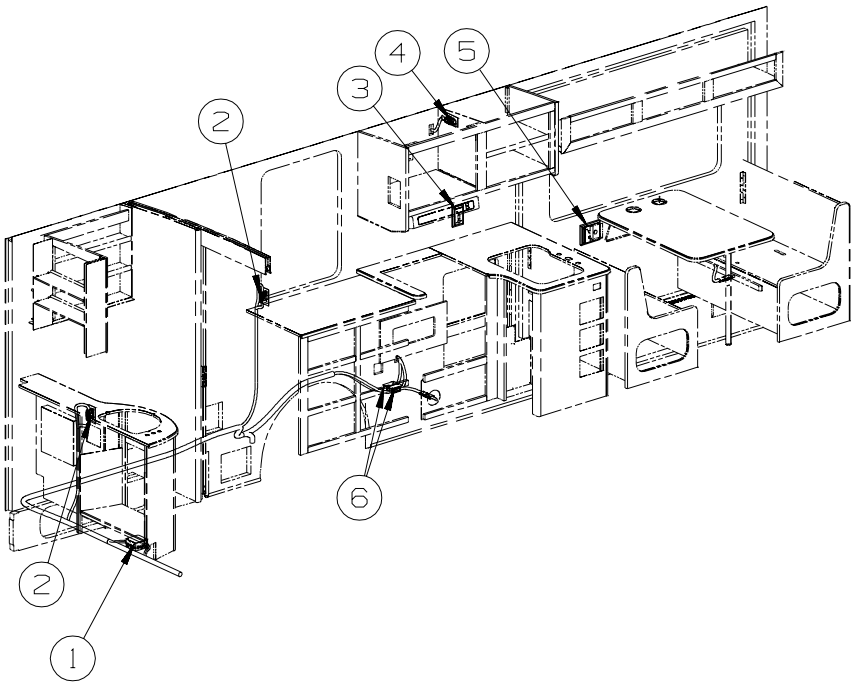

KEY	PART NUMBER	U/M	DESCRIPTION
1	008289-01-000	EA	BOX - ELECTRIC/STEEL - 4" X 4" - 1/2" & 3/4" KNOCKOUTS - GEN-4.0KW-ONANGAS-MICROQUIET
1	008294-01-000	EA	COVER - ELECTRIC BOX - BLANK/STEEL - 4" X 4" - GRAY - GEN-4.0KW-ONANGAS-MICROQUIET
2	058708-01-000	EA	RECEPTACLE - ELECTRIC - DOUBLE - BROWN
3	058708-01-000	EA	RECEPTACLE - ELECTRIC - DOUBLE - BROWN
3	133713-01-21A	EA	SPACER/RECEPTACLE - VINYL - WASHED MAPLE
3	133713-01-22A	EA	SPACER/RECEPTACLE - VINYL - SIERRA MAPLE
4	058708-05-000	EA	RECEPTACLE - ELECTRIC - SINGLE - BROWN
5	058708-01-000	EA	RECEPTACLE - ELECTRIC - DOUBLE - BROWN
5	133713-04-21A	EA	SPACER/RECEPTACLE - VINYL - WASHED MAPLE
5	133713-04-22A	EA	SPACER/RECEPTACLE - VINYL - SIERRA MAPLE
6	058707-02-000	EA	RECEPTACLE - BLANK - JUNCTION BOX

COPYRIGHT © 2006 WINNEBAGO INDUSTRIES INC.

ELECTRICAL GROUP (CONTINUED)

110V BODY WIRING (CONTINUED)

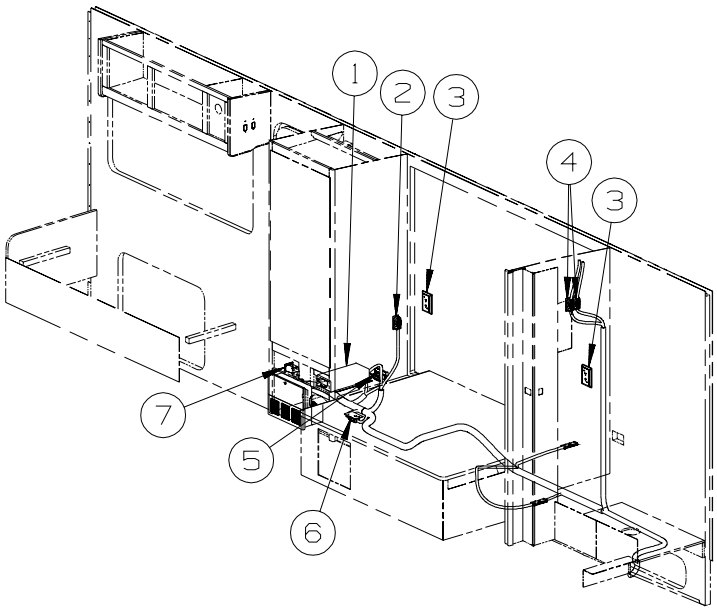

KEY	PART NUMBER	U/M	DESCRIPTION
1	099048-04-000	EA	INVERTER - 300 WATT - INVERTER-DC/AC, 300 WATT
2	058707-01-000	EA	RECEPTACLE - ELECTRIC - SINGLE - BROWN
3	058708-01-000	EA	RECEPTACLE - ELECTRIC - DOUBLE - BROWN
3	133713-01-21A	EA	SPACER/RECEPTACLE - VINYL - WASHED MAPLE
3	133713-01-22A	EA	SPACER/RECEPTACLE - VINYL - SIERRA MAPLE
4	058707-02-000	EA	RECEPTACLE - BLANK - JUNCTION BOX
5	131826-01-01A	EA	RECEPTACLE - EXTERIOR - W/COVER/GASKET - WHITE
6	058707-02-000	EA	RECEPTACLE - BLANK - JUNCTION BOX
6	058707-01-000	EA	RECEPTACLE - ELECTRIC - SINGLE - BROWN - INVERTER-DC/AC, 300 WATT
7	147446-01-01A	EA	RECEPTACLE - GFCI - 15A 125V - WHITE
7	147450-01-01A	EA	PLATE - ELECTRICAL OUTLET - WHITE

COPYRIGHT © 2006 WINNEBAGO INDUSTRIES INC.

ELECTRICAL GROUP (CONTINUED)

12V BODY WIRING

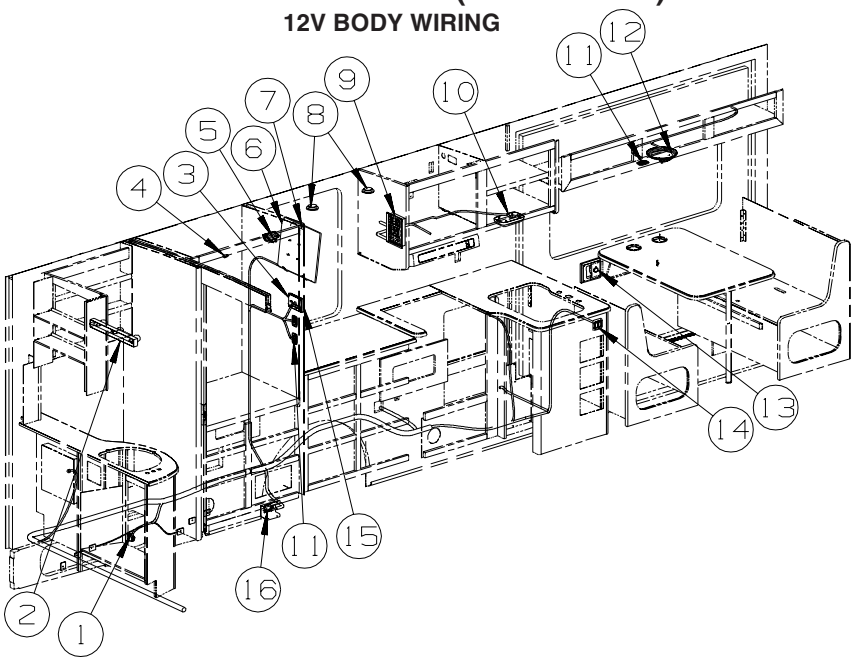

KEY	PART NUMBER	U/M	DESCRIPTION
1	108357-15-000	EA	SWITCH - ROCKER - DPDT - ON/NONE/ON - W/LIGHT W/O COVER
1	108356-04-01A	EA	COVER/ACTUATOR SWITCH - 2 ROWS DIMPLES W/LENS - BLACK
1	108355-01-000	EA	HOUSING - SWITCH
2	138116-01-02A	EA	LIGHT/MAKE UP - 3 BULB - CURVED - W/O BULB - SATIN NICKEL
2	123918-01-000	EA	BULB - 12V - MAKEUP - WHITE
3	135618-01-01A	EA	THERMOSTAT - HEAT PUMP/FURNACE - WHITE - AC HEAT PUMP-1 HI EFFICIENCY
3	135618-03-01A	EA	THERMOSTAT - ROOF A/C & FURNACE - WHITE - A/C ROOF-HI EFF LOW PROFILE
4	056264-01-000	EA	SWITCH - LEAF ACTUATOR
5*	087694-01-000	EA	LIGHT - WARDROBE/CLOSET - W/SWITCH
6*	151907-01-000	EA	TV - 15" FLAT SCREEN/LCD/STEREO - SHARP LC-15S1U-S - TV-15"DC,COLOR,LCD W/REMOTE FROM: 00-00-00 THRU: 09-25-05
6*	151907-02-000	EA	TV - 15" FLAT SCREEN/LCD/STEREO - SHARP LC-15S4U-S - TV-15"DC,COLOR,LCD W/REMOTE FROM: 09-26-05 THRU: 99-99-99
	082134-01-000	EA	ADAPTER - TV - CABLE TO CABLE - TV-15"DC,COLOR,LCD W/REMOTE
	136860-01-000	EA	CABLE - RCA - #3 MALE TO #12F MALE CONNECTOR - TV-15"DC,COLOR,LCD W/REMOTE
	149750-03-000	EA	TRANSMITTER - F/INFRA RED RECEIVER - TV-15"DC,COLOR,LCD W/REMOTE
	149750-04-000	EA	MODULE/INTERFACE - INFRA RED (RECEIVER TO TRANSMITTER)-TV-15"DC,COLOR,LCD W/REMOTE
7	149750-01-000	EA	RECEIVER - (INFRA RED SIGNAL) - W/6"LEAD/PLUG - TV-15"DC,COLOR,LCD W/REMOTE
8*	123775-01-02A	EA	LIGHT - HALOGEN - ROUND - SATIN NICKEL
9*	134940-06-01A	EA	PANEL - MONITOR - 2 TANK - W/GENERATOR SWITCH - GEN-4.0KW-ONANGAS-MICROQUIET
9*	134940-07-01A	EA	PANEL - MONITOR - 2 TANK
10*	137417-02-01A	EA	LIGHT - DOME - SINGLE - W/SWITCH/OPTIC LENS - WHITE
11	135740-01-02A	EA	SWITCH - ROCKER - SPST - ON/OFF - WHITE
11	135740-01-01A	EA	SWITCH - ROCKER - SPST - ON/OFF - BROWN
11	135741-01-02A	EA	SWITCH - BASE - SINGLE - WHITE
11	135741-01-01A	EA	SWITCH - BASE - SINGLE - BROWN
11	135742-01-02A	EA	BEZEL - SWITCH - SINGLE - WHITE
11	135742-01-01A	EA	BEZEL - SWITCH - SINGLE - BROWN
12*	093575-30-02A	EA	LIGHT - CEILING/ROUND - SATIN NICKEL
12	117805-01-000	EA	BULB - 12V - #921F - 1.4 AMPS
13	132958-01-000	EA	RECEPTACLE - 12 VOLT - MOUNTING FLANGE - BLACK
14	135740-01-02A	EA	SWITCH - ROCKER - SPST - ON/OFF - WHITE - GALLEY
14	135740-01-01A	EA	SWITCH - ROCKER - SPST - ON/OFF - BROWN - GALLEY
14	135740-02-02A	EA	SWITCH - ROCKER - SPDT - ON/ON - WHITE - BEDROOM
14	135740-02-01A	EA	SWITCH - ROCKER - SPDT - ON/ON - BROWN - BEDROOM
14	135741-02-02A	EA	SWITCH - BASE - DOUBLE - WHITE
14	135741-02-01A	EA	SWITCH - BASE - DOUBLE - BROWN
14	135742-54-01A	EA	BEZEL - SWITCH - BEDROOM/GALLEY - WHITE
14	135742-54-02A	EA	BEZEL - SWITCH - BEDROOM/GALLEY - BROWN

COPYRIGHT © 2006 WINNEBAGO INDUSTRIES INC.

ELECTRICAL GROUP (CONTINUED)

12V BODY WIRING (CONTINUED)

KEY	PART NUMBER	U/M	DESCRIPTION
15	135740-01-02A	EA	SWITCH - ROCKER - SPST - ON/OFF - WHITE - TV-15"DC,COLOR,LCD W/REMOTE
15	135740-01-01A	EA	SWITCH - ROCKER - SPST - ON/OFF - BROWN - TV-15"DC,COLOR,LCD W/REMOTE
15	135741-01-02A	EA	SWITCH - BASE - SINGLE - WHITE - TV-15"DC,COLOR,LCD W/REMOTE
15	135741-01-01A	EA	SWITCH - BASE - SINGLE - BROWN - TV-15"DC,COLOR,LCD W/REMOTE
15	135742-45-01A	EA	BEZEL - SWITCH - TV - WHITE - TV-15"DC,COLOR,LCD W/REMOTE
15	135742-45-02A	EA	BEZEL - SWITCH - TV - BROWN - TV-15"DC,COLOR,LCD W/REMOTE
16	149557-03-01A	EA	PLATE/WALL - DUAL COAXIAL/HORIZONTAL - WHITE

***COMPONENT PARTS LISTED LATER IN THIS GROUP**

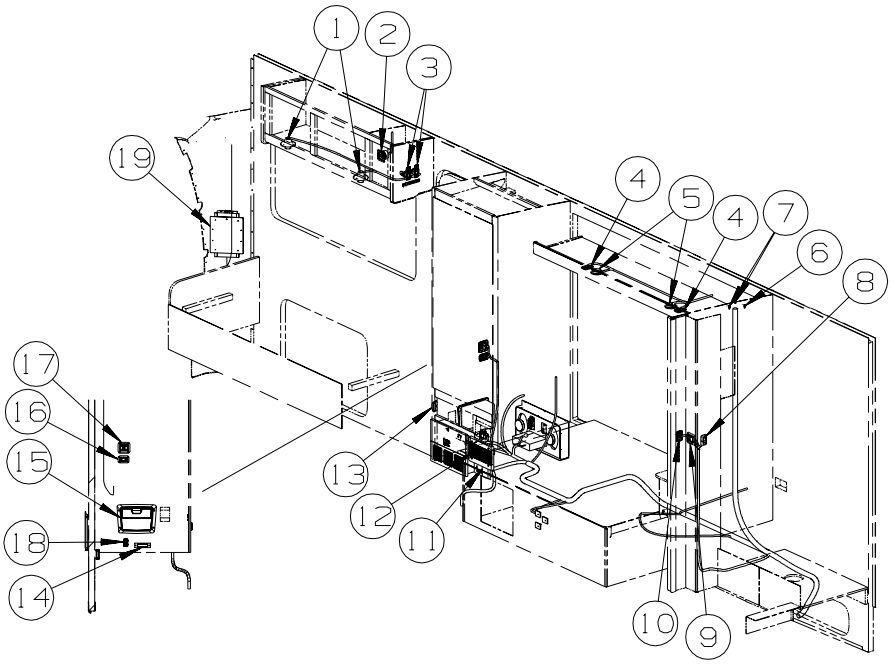

KEY	PART NUMBER	U/M	DESCRIPTION
1	132427-01-02A	EA	LIGHT - READING/SWIVEL - ROUND - NICKEL
2	148026-02-01A	EA	SPEAKER GRILLE - CUBE - SILVER - SOUND SYS. DLX. W/Q-SURROUND
2	148026-03-01A	EA	SPEAKER - CUBE - W/O CASE - SOUND SYS. DLX. W/Q-SURROUND
3	144363-10-02B	EA	PLATE - SWITCH - E-COATED
3	108357-06-000	EA	SWITCH - ROCKER - DPDT - MOM/OFF/MOM - 6 TERM - W/O COVER
3	108356-02-01A	EA	COVER/ACTUATOR SWITCH - 2 ROWS DIMPLES - BLACK
3	108355-01-000	EA	HOUSING - SWITCH
3	116220-01-000	EA	APPLIQUE - SWITCH/SLIDEOUT
3	116549-01-000	EA	LABEL - WARNING - SLIDEOUT
4	135740-01-02A	EA	SWITCH - ROCKER - SPST - ON/OFF - WHITE
4	135740-01-01A	EA	SWITCH - ROCKER - SPST - ON/OFF - BROWN
4	135741-01-02A	EA	SWITCH - BASE - SINGLE - WHITE
4	135741-01-01A	EA	SWITCH - BASE - SINGLE - BROWN
4	135742-01-02A	EA	BEZEL - SWITCH - SINGLE - WHITE
4	135742-01-01A	EA	BEZEL - SWITCH - SINGLE - BROWN
5*	123775-01-02A	EA	LIGHT - HALOGEN - ROUND - SATIN NICKEL
6	086756-01-000	EA	SPLITTER - TV/2 WAY
7	082134-01-000	EA	ADAPTER - TV - CABLE TO CABLE
8	135740-01-02A	EA	SWITCH - ROCKER - SPST - ON/OFF - WHITE
8	135740-01-01A	EA	SWITCH - ROCKER - SPST - ON/OFF - BROWN
8	135741-01-02A	EA	SWITCH - BASE - SINGLE - WHITE
8	135741-01-01A	EA	SWITCH - BASE - SINGLE - BROWN
8	135742-10-01A	EA	BEZEL - SWITCH - SHOWER - WHITE
8	135742-10-02A	EA	BEZEL - SWITCH - SHOWER - BROWN
9	135740-01-02A	EA	SWITCH - ROCKER - SPST - ON/OFF - WHITE
9	135740-01-01A	EA	SWITCH - ROCKER - SPST - ON/OFF - BROWN
9	135741-02-02A	EA	SWITCH - BASE - DOUBLE - WHITE
9	135741-02-01A	EA	SWITCH - BASE - DOUBLE - BROWN
9	135742-14-01A	EA	BEZEL - SWITCH - MAKEUP/CEILING - WHITE
9	135742-14-02A	EA	BEZEL - SWITCH - MAKEUP/CEILING - BROWN

COPYRIGHT © 2006 WINNEBAGO INDUSTRIES INC.

ELECTRICAL GROUP (CONTINUED)

12V BODY WIRING (CONTINUED)

KEY	PART NUMBER	U/M	DESCRIPTION
10	135740-01-02A	EA	SWITCH - ROCKER - SPST - ON/OFF - WHITE
10	135740-01-01A	EA	SWITCH - ROCKER - SPST - ON/OFF - BROWN
10	135741-01-02A	EA	SWITCH - BASE - SINGLE - WHITE
10	135741-01-01A	EA	SWITCH - BASE - SINGLE - BROWN
10	135742-14-01A	EA	BEZEL - SWITCH - MAKEUP/CEILING - WHITE
10	135742-14-02A	EA	BEZEL - SWITCH - MAKEUP/CEILING - BROWN
11	150138-01-01A	EA	DETECTOR - LP GAS - WHITE
12	124884-01-000	EA	SPEAKER - 6" X 9" - SUB-WOOFER - W/O GRILLE-SOUND SYS. DLX. W/Q-SURROUND
12	151844-01-01A	EA	GRILLE - SPEAKER - 6" X 9" - SUB WOOFER - BLACK-SOUND SYS. DLX. W/Q-SURROUND
13	116995-02-000	EA	SWITCH/MAGNET - ELECTRIC STEP - BLACK/WHITE-CLOSED CIRCUIT
14	061424-01-000	EA	LIGHT - AISLE - 12 VOLT - RECTANGULAR
15	141679-03-000	EA	CHARGER/DOCK STATION ONLY - FOR #GMRS100 TWO-WAY RADIO
15	141679-04-000	EA	RADIO/TWO-WAY W/BATTERY (EACH = 1) - 5 MILE - ASA GMRS100 FROM: 00-00-00 THRU: 12-04-05
15	141679-05-000	EA	RADIO/TWO-WAY W/BATTERY (EACH = 1) - 9 MILE - ASA GMRS200 FROM: 12-05-05 THRU: 99-99-99
16	135740-01-01A	EA	SWITCH - ROCKER - SPST - ON/OFF - BROWN
16	135740-01-02A	EA	SWITCH - ROCKER - SPST - ON/OFF - WHITE
16	135741-01-01A	EA	SWITCH - BASE - SINGLE - BROWN
16	135741-01-02A	EA	SWITCH - BASE - SINGLE - WHITE
16	135742-11-02A	EA	BEZEL - SWITCH - STEP - BROWN
16	135742-11-01A	EA	BEZEL - SWITCH - STEP - WHITE
17	135740-01-01A	EA	SWITCH - ROCKER - SPST - ON/OFF - BROWN
17	135740-01-02A	EA	SWITCH - ROCKER - SPST - ON/OFF - WHITE
17	135741-02-01A	EA	SWITCH - BASE - DOUBLE - BROWN
17	135741-02-02A	EA	SWITCH - BASE - DOUBLE - WHITE
17	135742-19-02A	EA	BEZEL - SWITCH - CEILING/PORCH - BROWN
17	135742-19-01A	EA	BEZEL - SWITCH - CEILING/PORCH - WHITE
18	108357-06-000	EA	SWITCH - ROCKER - DPDT - MOM/OFF/MOM - 6 TERM - W/O COVER
18	108356-11-01A	EA	COVER/ACTUATOR SWITCH - 3 GROOVES - AUX BATT - BLACK
18	108355-01-000	EA	HOUSING - SWITCH
18	098351-07-02A	EA	PLATE/SWITCH - GENERATOR SWITCH - CHROME
19	124881-02-000	EA	AMPLIFIER-AUDIO-MTS Q SURROUND-ORANGE LABEL (LATEST)-SOUND SYS. DLX. W/Q-SURROUND

COPYRIGHT © 2006 WINNEBAGO INDUSTRIES INC.

ELECTRICAL GROUP (CONTINUED)

12V BODY WIRING (CONTINUED)

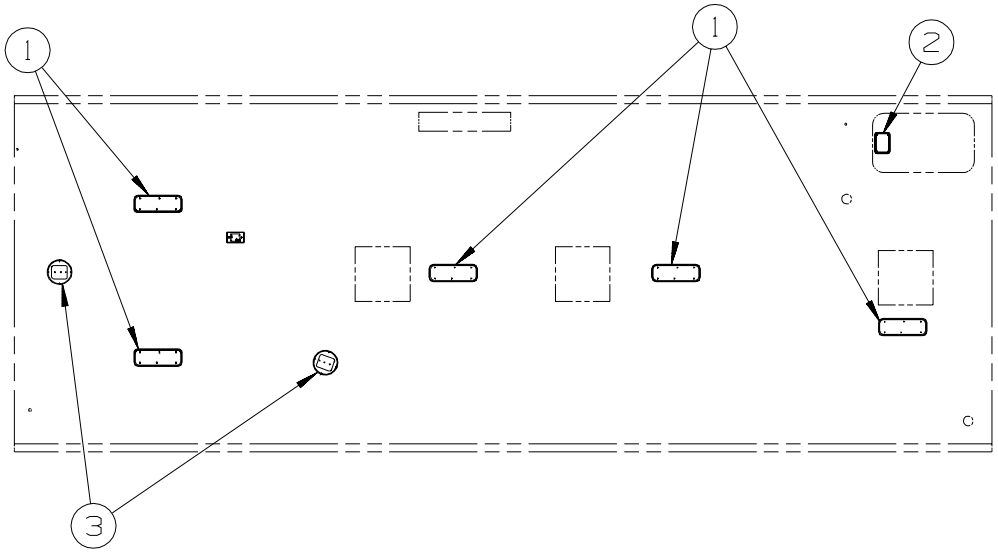

KEY	PART NUMBER	U/M	DESCRIPTION
1*	137417-06-01A	EA	LIGHT - DOME - DOUBLE - W/O SWITCH - W/FROSTED LENS-WHITE
2*	121935-01-01A	EA	LIGHT - DOME - SHOWER
3	148026-02-01A	EA	SPEAKER GRILLE - CUBE - SILVER - SOUND SYS. DLX. W/Q-SURROUND
3	148026-03-01A	EA	SPEAKER - CUBE - W/O CASE - SOUND SYS. DLX. W/Q-SURROUND
3	149414-01-13A	EA	POD/SPEAKER - RECESSED/BLACK - SOUND SYS. DLX. W/Q-SURROUND
3	149422-01-02B	EA	BRACKET - SPEAKER - E-COATED - SOUND SYS. DLX. W/Q-SURROUND

***COMPONENT PARTS LISTED LATER IN THIS GROUP**

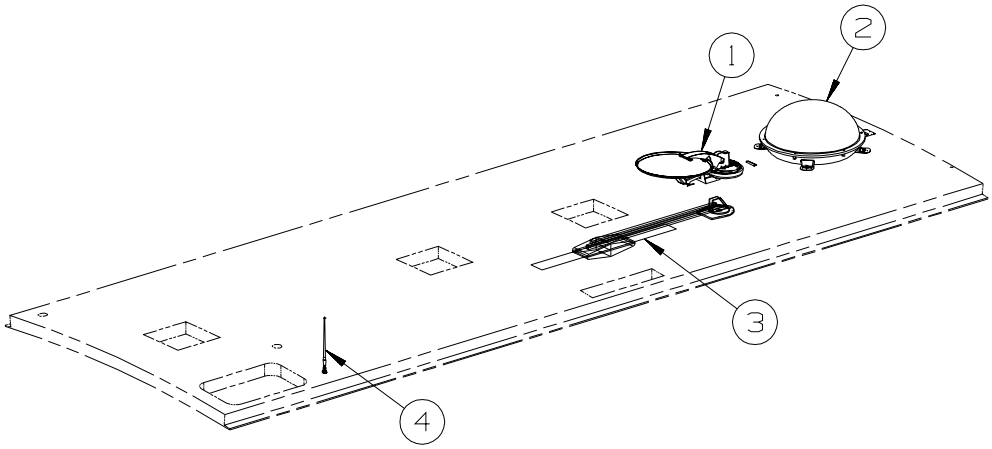

KEY	PART NUMBER	U/M	DESCRIPTION
1*	137135-02-000	EA	ANTENNA - SATELLITE DSS - W/SENSOR - SATELLITE DISH
2	154474-01-01A	EA	ANTENNA/SATELLITE - DISH IN DOME/SEARCH IN MOTION - WHITE - IN MOTION SATELLITE SYSTEM FROM: 00-00-00 THRU: 12-04-05
2	154474-04-01A	EA	ANTENNA/SATELLITE - DISH IN DOME/SEARCH IN MOTION - WHITE - IN MOTION SATELLITE SYSTEM FROM: 12-05-05 THRU: 99-99-99
2	154474-02-000	EA	CONTROL/SATELLITE KIT - IDB BOX/IDD BOX-PWR SUPPLY-CABLE - IN MOTION SATELLITE SYSTEM
2	154474-03-000	EA	CABLE - SATELLITE - RG6 COAX - 7' W/CONNECTORS - IN MOTION SATELLITE SYSTEM
2	146488-01-000	EA	PLATE - ROOF - CABLE ENTRY
3*	076319-23-000	EA	ANTENNA - TV ROOF MOUNT - 44.5" MAST
3*	076319-25-000	EA	KIT - HARDWARE INTERIOR
3	069726-02-000	EA	BUMPER - .88" OD X .40" THICK - BLACK
4	090944-01-000	EA	ANTENNA - RADIO - 16" RUBBER - W/72" LEAD WIRE
4	109889-04-000	EA	EXTENDER - ANTENNA SHAFT - 3.7"
4	147741-01-09B	EA	BRACKET - ANTENNA GROUND - GALVANIZED

***COMPONENT PARTS LISTED LATER IN THIS GROUP**

COPYRIGHT © 2006 WINNEBAGO INDUSTRIES INC.

ELECTRICAL GROUP (CONTINUED)

12V BODY WIRING (CONTINUED)

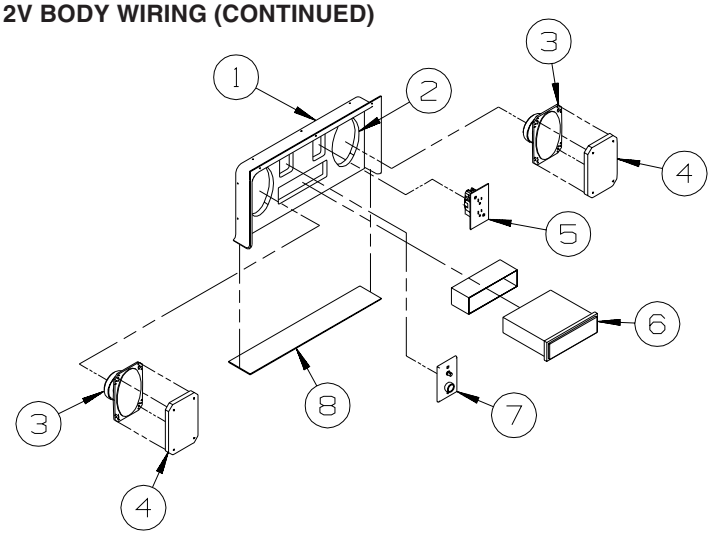

KEY	PART NUMBER	U/M	DESCRIPTION
1	124696-02-01A	EA	BOX-ENTERTAINMENT CTR/EXT-19.4"W X 10"H X 2.5"D - BRT WHT
	124696-01-01A	EA	BOX-ENTERTAINMENT CTR/EXT-19.4"W X 10"H X 10.2"D W/CUTOUTS
2	127409-02-L15	EA	PLATE - RADIO MOUNTING
3	110469-01-000	EA	SPEAKER - 4" X 6" OVAL - COAXIAL
4	110470-01-01A	EA	GRILLE - 4" X 6" - OVAL SPEAKER - BLACK
5	058708-01-000	EA	RECEPTACLE - ELECTRIC - DOUBLE - BROWN
6*	148231-01-000	EA	RADIO - AM/FM CD - W/REMOTE - MAGNADYNE M3100CD FROM: 00-00-00 THRU: 04-11-05
6*	155619-01-000	EA	RADIO - AM/FM CD - W/REMOTE - MAGNADYNE M3200CD FROM: 04-12-05 THRU: 99-99-99
7	076319-09-000	EA	WALLPLATE - TV CABLE RECEPTACLE - SINGLE - BROWN
8	104898-01-02A	EA	PLATE - PLASTIC BOTTOM - BRIGHT WHITE

***COMPONENT PARTS LISTED LATER IN THIS GROUP**

COPYRIGHT © 2006 WINNEBAGO INDUSTRIES INC.

ELECTRICAL GROUP (CONTINUED)

EXTERIOR LAMPS

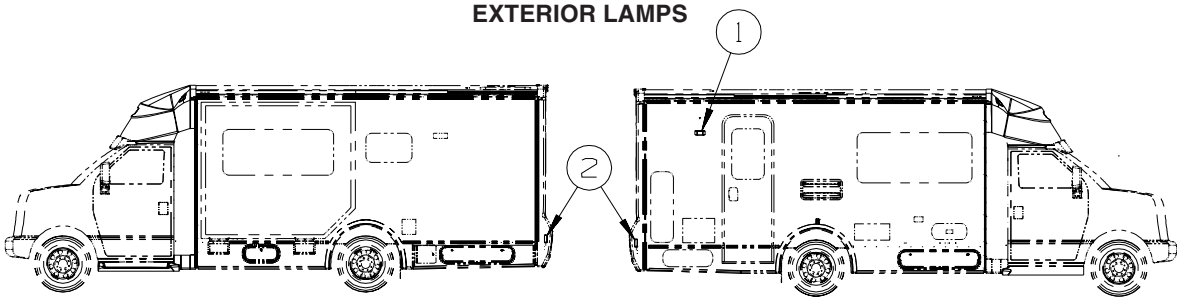

KEY	PART NUMBER	U/M	DESCRIPTION
1*	097917-01-06A	EA	LIGHT - PORCH - ENTRY DOOR - BRIGHT WHITE
	008215-01-000	EA	BULB - 12 VOLT - #1003 - .94 AMP
2	147680-01-01A	EA	BASE - MARKER LAMP - WHITE
2	147680-03-01A	EA	LAMP - MARKER - LENS - RED

***COMPONENT PARTS LISTED LATER IN THIS GROUP**

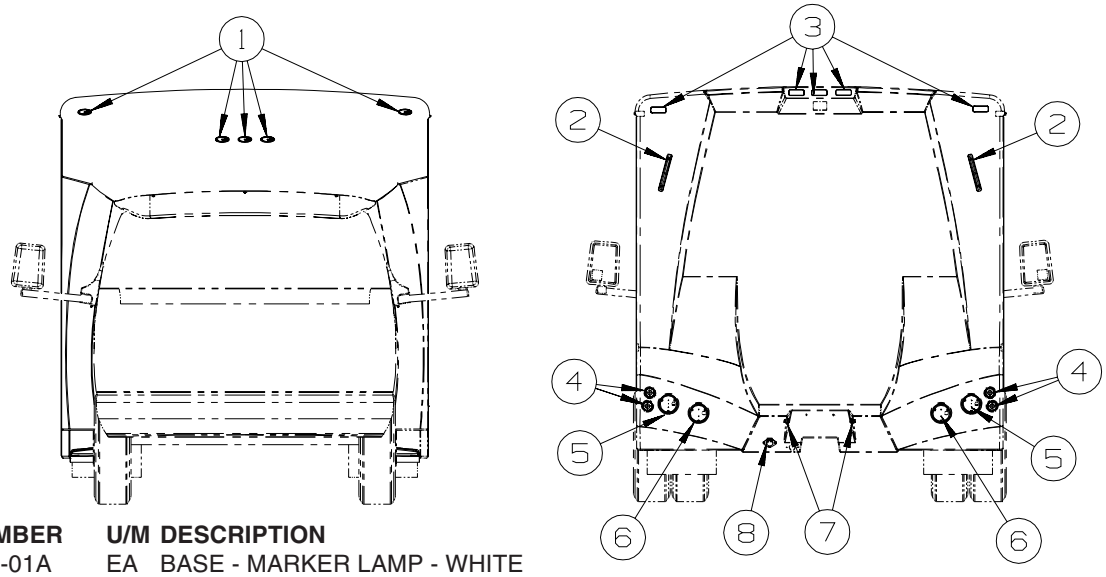

KEY	PART NUMBER	U/M	DESCRIPTION
1	147680-01-01A	EA	BASE - MARKER LAMP - WHITE
1	147680-02-01A	EA	LAMP - MARKER - LENS - AMBER
2	151076-01-000	EA	LIGHT - BRAKE - CENTER MOUNT
3	147680-01-01A	EA	BASE - MARKER LAMP - WHITE
3	147680-03-01A	EA	LAMP - MARKER - LENS - RED
4	141514-01-000	EA	REFLECTOR - ROUND/RED
5	149222-01-000	EA	LAMP - STOP/TURN/TAIL - HELLA 84412B
6	149222-02-000	EA	LAMP - BACKUP - HELLA 84411B
7	087201-01-000	EA	LIGHT - HALF ROUND - 1" X 1.7" - PLASTIC - BLACK OR WHITE
8*	113589-01-000	EA	CONNECTOR - PLUG - TRAILER
			FROM: 00-00-00 THRU: 05-08-05
8	146246-01-000	EA	CONNECTOR/PLUG - TRAILER - 7 PIN
			FROM: 05-09-05 THRU: 99-99-99
	151080-01-000	EA	CONNECTOR - PLUG - TRAILER - 7 SOCKET

***COMPONENT PARTS LISTED LATER IN THIS GROUP**

COPYRIGHT © 2006 WINNEBAGO INDUSTRIES INC.

ELECTRICAL GROUP (CONTINUED)

FRONT END

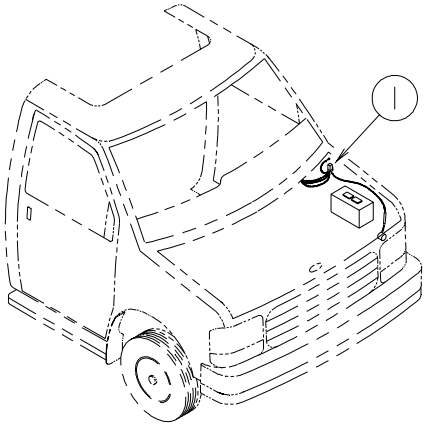

KEY	PART NUMBER	U/M	DESCRIPTION
1	100138-01-000	EA	MODULE - DAYTIME/RUNNING LIGHT - HAMSAR DRL #H8005B

KEY	PART NUMBER	U/M	DESCRIPTION
*	120269-07-01A	EA	PANEL - W/ELECTRIC MIRROR/HEAT SWITCH - F/#L28X OPTION - MIRRORS-EXTERIOR W/DEFROST
*	133908-09-01A	EA	PANEL - F/ELECTRIC MIRROR ONLY - L28X OPTION - MIRRORS-EXTERIOR W/DEFROST - CHEVY

***COMPONENT PARTS LISTED LATER IN THIS GROUP**

COPYRIGHT © 2006 WINNEBAGO INDUSTRIES INC.

ELECTRICAL GROUP (CONTINUED)

FRONT TV/VCR

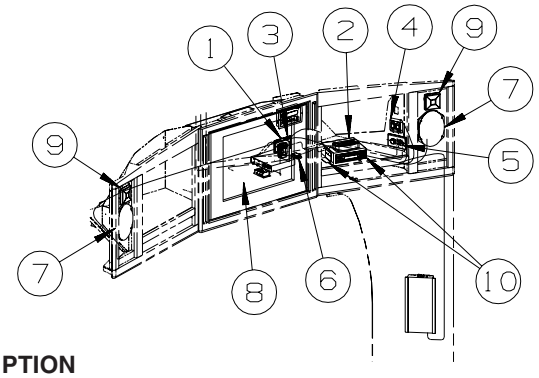

KEY	PART NUMBER	U/M	DESCRIPTION
1	058708-01-000	EA	RECEPTACLE - ELECTRIC - DOUBLE - BROWN
2*	150032-01-000	EA	DVD/VCR PLAYER - ASA DVD-VCP01
			FROM: 00-00-00 THRU: 02-24-05
2	150447-01-02B	EA	STRAP/TIEDOWN - VCP - E-COATED
			FROM: 00-00-00 THRU: 02-24-05
2*	149925-01-000	EA	DVD PLAYER - SLOT-IN - AUDIOVOX - AVD300
			FROM: 02-25-05 THRU: 05-08-05
2*	156130-01-000	EA	DVD PLAYER - SLOT-IN - AUDIOVOX - AVD301
			FROM: 05-09-05 THRU: 01-01-06
2*	158778-01-000	EA	DVD PLAYER - SLOT-IN - 12V - JENSEN - DV352WIN
			FROM: 01-02-06 THRU: 99-99-99
3	149557-04-01A	EA	PLATE/WALL - TRIPLE COAXIAL/HORIZONTAL - WHITE
4	135740-01-01A	EA	SWITCH - ROCKER - SPST - ON/OFF - BROWN - DVD PLAYER
4	135740-05-01A	EA	SWITCH - ROCKER - DPDT - ON/ON - SURROUND SOUND
4	138253-01-02A	EA	SWITCH - BLANK - BROWN
4	135741-02-01A	EA	SWITCH - BASE - DOUBLE - BROWN
4	135742-53-02A	EA	BEZEL - SWITCH - RADIO/TV/DVD - BROWN
5	086777-02-000	EA	WALLPLATE/TV CABLE W/ANTENNA SWITCH/BOOSTER - 2 TV - BLACK
6	086756-01-000	EA	SPLITTER - TV/2 WAY
7	110465-01-000	EA	SPEAKER KIT,4 - 5 X 7 SPEAKERS
8*	146299-02-000	EA	TV - 24" - STEREO W/5 JACKS - SONY 24FS120MT02
9	148026-02-01A	EA	SPEAKER GRILLE - CUBE - SILVER - SURROUND SOUND
9	148026-03-01A	EA	SPEAKER - CUBE - W/O CASE - SURROUND SOUND
10	158807-01-02B	EA	BRACKET - DVD - E-COATED
			FROM: 01-02-06 THRU: 99-99-99

***COMPONENT PARTS LISTED LATER IN THIS GROUP**

COPYRIGHT © 2006 WINNEBAGO INDUSTRIES INC.

ELECTRICAL GROUP (CONTINUED)

COMPONENT PARTS FOR WIRING

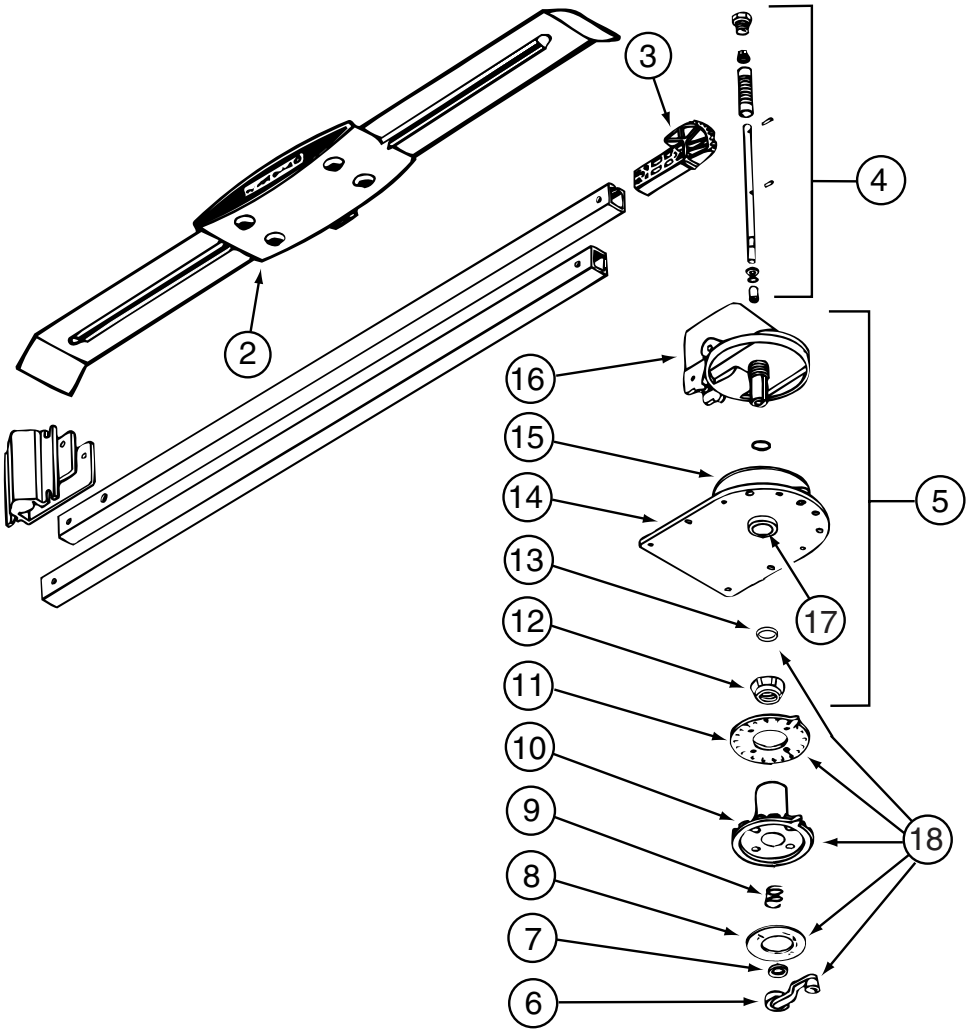

076319-23-000

KEY	PART NUMBER	U/M	DESCRIPTION	VENDOR NO.
2	076319-01-700	EA	HEAD-ANTENNA, AMPLIFIED	RVSA U/V
3	076319-01-701	EA	GEAR-ELEVATING, PLASTIC	2200046
4	076319-01-702	EA	SHAFT ASM-ELEVATING	RP-4000
5	076319-01-711	EA	BASE & LIFT ASM	2762802
7	076319-01-705	EA	GROMMET-NYLON, 7/8"ID	3200658
8	076319-01-708	EA	DECAL-CRANK	5413002
9	076319-01-707	EA	SPRING-HANDLE	2160822
11	076319-01-712	EA	PLATE - CEILING	3200608
12	076319-01-715	EA	NUT (GEAR HOUSING)	2200047
14	076319-01-713	EA	PLATE-BASE, STEEL	3100523
15	076319-01-703	EA	BEARING-NYLON, 5"OD	3200656
16	076319-01-714	EA	HOUSING, ROTATING GEAR	2200049
17	076319-01-704	EA	BEARING-NYLON, 1.25"OD	3200657
18	076319-01-709	EA	HANDLE-HEAD DIRECTIONAL	200644
	076319-01-716	EA	TUBING, ELEVATING	RP-2900
			CONTACT WINNEBAGO PART SALES FOR UNLISTED COMPONENT(S)	

076319-25-000

KEY	PART NUMBER	U/M	DESCRIPTION	VENDOR NO.
6	076319-01-706	EA	CRANK-W/SET SCREW UNIV/BEIGE	2750897
6	120233-01-710	EA	HANDLE-CRANK W/SCREW - WHITE	RP-6795
8	076319-01-708	EA	DECAL-CRANK	5413002
10	076319-25-700	EA	DIRECTIONAL HANDLE(WHITE)	3200612
11	076319-25-701	EA	PLATE - CEILING(WHITE)	3200609
13	120233-01-709	EA	WASHER-NYLON	RP-2658
			CONTACT WINNEBAGO PART SALES FOR UNLISTED COMPONENT(S)	

COPYRIGHT © 2006 WINNEBAGO INDUSTRIES INC.

ELECTRICAL GROUP (CONTINUED)

COMPONENT PARTS FOR WIRING (CONTINUED)

087694-01-000

KEY	PART NUMBER	U/M	DESCRIPTION	VENDOR NO.
	087694-01-700	EA	BULB	GE561

097917-01-06A

KEY	PART NUMBER	U/M	DESCRIPTION	VENDOR NO.
	097917-01-700	EA	LENS-LIGHT, CLEAR	30-78-021

113589-01-000

KEY	PART NUMBER	U/M	DESCRIPTION	VENDOR NO.
	113589-01-700	EA	ADAPTER, 4-WAY/6-WAY	5291

120269-07-01A

KEY	PART NUMBER	U/M	DESCRIPTION	VENDOR NO.
	120269-07-700	EA	SWITCH - REMOTE	7475720
	133908-09-700	EA	SWITCH - MIRROR HEATER	7475150

121935-01-01A

KEY	PART NUMBER	U/M	DESCRIPTION	VENDOR NO.
	121935-01-700	EA	LENS ONLY	809511

123775-01-01A

KEY	PART NUMBER	U/M	DESCRIPTION	VENDOR NO
	123775-01-700	EA	BULB - 10 WATT - HALOGEN	71-JC10
	123775-01-701	EA	BEZEL/LENS - RECESSED LIGHT	99 BEZEL/LENS-BRASS

133908-09-01A

KEY	PART NUMBER	U/M	DESCRIPTION	VENDOR NO.
	133908-09-700	EA	SWITCH-MIRROR HEATER	7475150

COPYRIGHT © 2006 WINNEBAGO INDUSTRIES INC.

ELECTRICAL GROUP (CONTINUED)

COMPONENT PARTS FOR WIRING (CONTINUED)

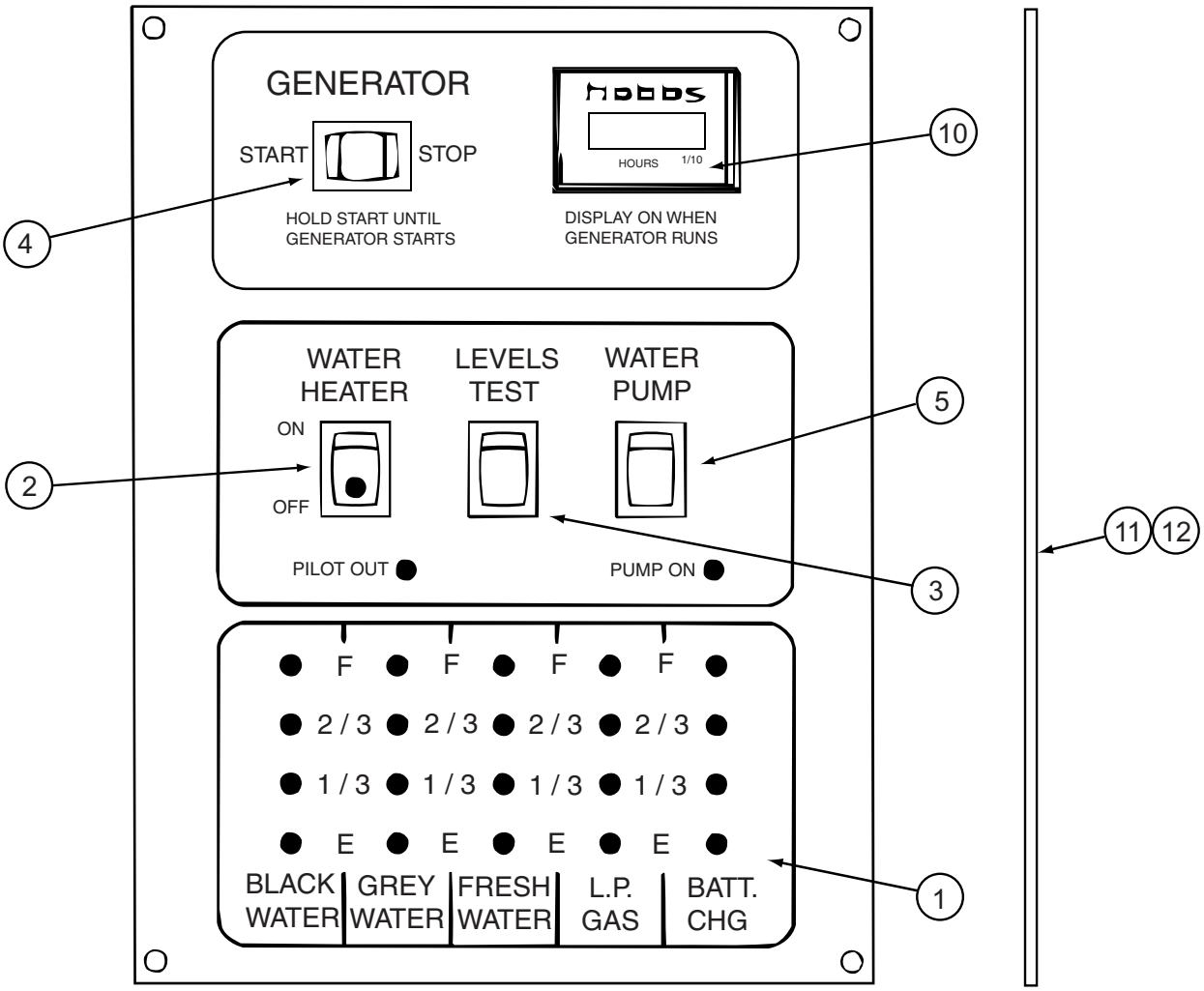

134940-06-01A

KEY	PART NUMBER	U/M	DESCRIPTION	VENDOR NO.
1	134940-01-702	EA	CHASSIS - SILKSCREENED	CC0558-00
2	134940-01-701	EA	SWITCH-SPST/ON-OFF/BLK W/LGT	L0109
3	096983-01-701	EA	SWITCH - SPST/MOM 2 TERMINAL	L0111-00
4	096983-01-702	EA	SWITCH - MOM/OFF/MOM/3 TERM	L0112-00
5	096983-01-703	EA	SWITCH - ON/ON	L0115-00
10	100258-10-701	EA	GAUGE-HR METER ONLY (LCD)	L0775-00
11	134940-06-700	EA	PC BOARD - SENSOR SYSTEM/RED	L5131-02
			CONTACT WINNEBAGO PART SALES FOR UNLISTED COMPONENT(S)	

134940-07-01A

KEY	PART NUMBER	U/M	DESCRIPTION	VENDOR NO.
1	134940-01-702	EA	CHASSIS - SILKSCREENED	CC0558-00
2	134940-01-701	EA	SWITCH-SPST/ON-OFF/BLK W/LGT	L0109
3	096983-01-701	EA	SWITCH - SPST/MOM 2 TERMINAL	L0111-00
4	096983-01-703	EA	SWITCH - ON/ON	L0115-00
5	134940-02-700	EA	SWITCH - DUMMY	L0118
11	134940-06-700	EA	PC BOARD - SENSOR SYSTEM/RED	L5131-02
			CONTACT WINNEBAGO PART SALES FOR UNLISTED COMPONENT(S)	

COPYRIGHT © 2006 WINNEBAGO INDUSTRIES INC.

ELECTRICAL GROUP (CONTINUED)

COMPONENT PARTS FOR WIRING (CONTINUED)

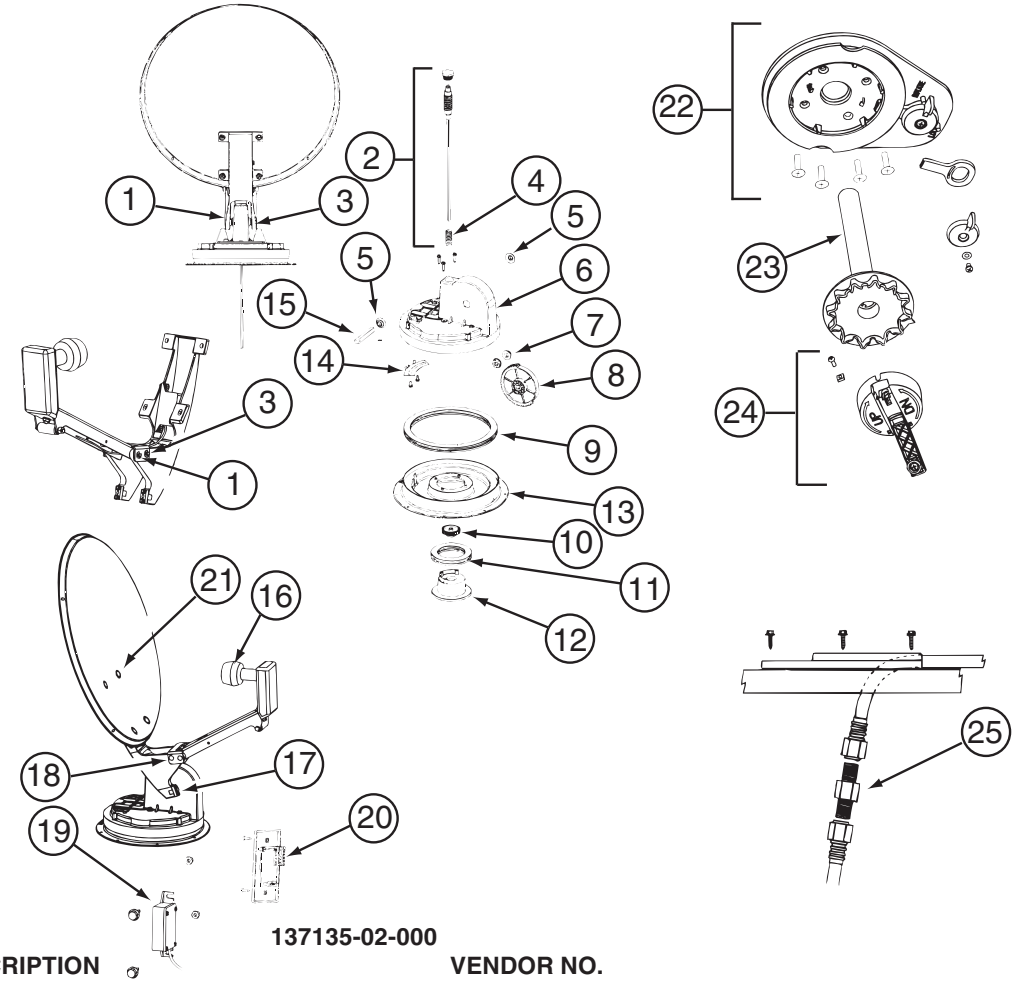

137135-02-000

KEY	PART NUMBER	U/M	DESCRIPTION	VENDOR NO.
1	120233-01-714	EA	CLIP-E	5160818
2	137135-01-703	EA	KIT ELEV - SHAFT/GEAR/SPRING	RP-4400
3	137135-01-704	EA	PIN - 1/4" X 3.25"	2160813
4	137135-01-705	EA	SPRING	2160818
5	137135-01-707	EA	SEAL - PIVOT SHAFT	2200852
6	137135-01-708	EA	TURRET	3100728
7	137135-01-709	EA	PIVOT BEARING	2200470
8	137135-01-711	EA	GEAR - ELEVATING	2200464
9	137135-01-712	EA	BEARING - OUTER	2590347
10	137135-01-714	EA	GEAR - ELEVATING SHAFT	2200465
11	137135-01-715	EA	BEARING - INNER	2590348
12	137135-01-716	EA	HUB	3100731
13	137135-01-713	EA	TURRET BASE	3100730
14	137135-01-710	EA	PLATE - ROTATE LIMIT	3720052
16	137135-02-703	EA	LOW NOISE BLOCK FILTER	LB-6000 - DUAL
17	137135-01-722	EA	CLAMP	2590343
18	137135-01-719	EA	BRACKET - PIVOT	2744945
19	137135-01-720	EA	DE-SENSOR UNIT W/43" CABLE	DM4000
20	137135-02-701	EA	BOX - SURFACE MOUNT	SM-100
21	137135-01-717	EA	BOLT - FLAT HEAD	2160362
22	120233-01-737	EA	PLATE/INT-W/DIRECTIONAL HDLE	RK-CEIL
23	120233-01-704	EA	DIAL/DIRECTIONAL 4"W/SPRING	3200364
24	120233-01-738	EA	HDW PKG-HANDLE/SPRING/WASHER	RK-HAND
25	137135-01-701	EA	CONNECTOR - F - MALE TO MALE	FS-8100
	120233-04-700	EA	KIT-WALL PLATE/CABLE - GRAY	DM4000
	137135-01-700	EA	ROOF WEDGE W/GASKET	RW-5000
	137135-01-706	EA	KIT-TURRET/SEAL/BEARING/GEAR	RP-RM30
	137135-01-718	EA	REFLECTOR/WHITE-46CM W/HDW	RP-35RM
	137135-02-700	EA	DE-SENSOR	2780096
	137135-02-704	EA	KIT-UPDATE DIRECTIONAL HDL	RP-RMDH
	137135-02-705	EA	KIT-TURRET & SHAFT COMPLETE	RP-RM46

CONTACT WINNEBAGO PART SALES FOR UNLISTED COMPONENT(S)

COPYRIGHT © 2006 WINNEBAGO INDUSTRIES INC.

ELECTRICAL GROUP (CONTINUED)

COMPONENT PARTS FOR WIRING (CONTINUED)

137417-02-01A

KEY	PART NUMBER	U/M	DESCRIPTION	VENDOR NO.
	137417-02-700	EA	LENS - SINGLE OPTIC	810844

137417-06-01A

KEY	PART NUMBER	U/M	DESCRIPTION	VENDOR NO.
	137417-06-700	EA	LENS - DOUBLE WHITE	810867

146299-02-000

KEY	PART NUMBER	U/M	DESCRIPTION	VENDOR NO.
	146299-02-700	EA	REMOTE - TV	1-468-835-11

148231-01-000

KEY	PART NUMBER	U/M	DESCRIPTION	VENDOR NO.
	148231-01-700	EA	REMOTE	RC3100

149925-01-000

KEY	PART NUMBER	U/M	DESCRIPTION	VENDOR NO.
	149925-01-700	EA	REMOTE - F/DVD	P42MA0101

150032-01-000

KEY	PART NUMBER	U/M	DESCRIPTION	VENDOR NO.
	150032-01-700	EA	REMOTE - DVD/VCP	P97P1R2ZHA0

151907-01-000

KEY	PART NUMBER	U/M	DESCRIPTION	VENDOR NO.
	150934-01-700	EA	REMOTE - TV	RRMCGA174WJSA

151907-02-000

KEY	PART NUMBER	U/M	DESCRIPTION	VENDOR NO.
	150934-02-700	EA	REMOTE - TV	RRMCGA293WJSA

155619-01-000

KEY	PART NUMBER	U/M	DESCRIPTION	VENDOR NO.
	155619-01-700	EA	REMOTE	RC3200

156130-01-000

KEY	PART NUMBER	U/M	DESCRIPTION	VENDOR NO.
	149925-01-700	EA	REMOTE - F/DVD	P42MA0101

158778-01-000

KEY	PART NUMBER	U/M	DESCRIPTION	VENDOR NO.
	158778-01-700	EA	REMOTE	PSVCDV352

COPYRIGHT © 2006 WINNEBAGO INDUSTRIES INC.

ELECTRICAL GROUP (CONTINUED)

CIRCUIT BREAKERS, FUSES & RELAYS

KEY	PART NUMBER	U/M	DESCRIPTION
	008235-01-000	EA	FUSE - 15 AMP/12VOLT - AUTOMOTIVE
	062901-02-000	EA	FUSE - 5 AMP - AUTOMOTIVE
	062901-04-000	EA	FUSE - 10 AMP - AUTOMOTIVE
	062901-05-000	EA	FUSE - 15 AMP - AUTOMOTIVE
	062901-06-000	EA	FUSE - 20 AMP - AUTOMOTIVE
	062901-07-000	EA	FUSE - 25 AMP - AUTOMOTIVE
	062901-08-000	EA	FUSE - 30 AMP - AUTOMOTIVE
	063910-01-000	EA	HOUSING - RELAY
	063912-02-000	EA	RELAY - CANISTER - SPDT
	083209-01-000	EA	CIRCUIT BREAKER - 15 AMP - 120 VOLT - CANADIAN
	083209-02-000	EA	CIRCUIT BREAKER - 15/15 AMP - 120 VOLT
	083209-03-000	EA	CIRCUIT BREAKER - 15/20 AMP - 120 VOLT
	083209-04-000	EA	CIRCUIT BREAKER - 30 AMP - 120 VOLT
	083209-05-000	EA	CIRCUIT BREAKER - 20 AMP - 120 VOLT
	083209-06-000	EA	CIRCUIT BREAKER - 30/15 AMP - 120 VOLT
	083209-07-000	EA	CIRCUIT BREAKER - 20/20 AMP - 120 VOLT
	083209-10-000	EA	CIRCUIT BREAKER - 20/30 AMP - 120 VOLT
	083209-11-000	EA	CIRCUIT BREAKER - 20/15 AMP - 120 VOLT
	092786-01-000	EA	BUSS BAR-2.1" LONG
	092786-03-000	EA	BUSS BAR - 6.9" LONG
	092786-06-000	EA	BUSS BAR
	093654-01-000	EA	CIRCUIT BREAKER - 6 AMP - 12 VOLT - PUSH BUTTON - WHITE
	093654-02-000	EA	CIRCUIT BREAKER - 15 AMP - 12 VOLT - PUSH BUTTON - WHITE
	093654-03-000	EA	CIRCUIT BREAKER - 20 AMP - 12 VOLT - PUSH BUTTON - WHITE
	093654-11-000	EA	COVER - RESET BUTTON
	093655-01-000	EA	CIRCUIT BREAKER - 25 AMP - 12 VOLT - PUSH BUTTON - WHITE
	093655-02-000	EA	CIRCUIT BREAKER - 30 AMP - 12 VOLT - PUSH BUTTON - WHITE
	093655-03-000	EA	CIRCUIT BREAKER - 40 AMP - 12 VOLT - PUSH BUTTON - WHITE
	097611-01-000	EA	CIRCUIT BREAKER - 10 AMP
	097611-02-000	EA	CIRCUIT BREAKER - 30 AMP
	097611-03-000	EA	CIRCUIT BREAKER - 20 AMP
	100341-01-000	EA	FUSE HOLDER - IN LINE TYPE
	106656-01-000	EA	FUSE BLOCK - 4 CAVITY - AUTOFUSE
	113482-01-000	EA	CIRCUIT BREAKER - 55 AMP - MANUAL
	115187-01-000	EA	FUSE - 300 AMP - NON-DELAY
	115187-02-000	EA	HOLDER - FUSE
	115187-03-000	EA	FUSE - 60 AMP - NON-DELAY
	122811-01-000	EA	CIRCUIT BREAKER - 20/50/50/20 AMP - 250V
	125986-02-000	EA	FUSE - 5 AMP - AUTO - MINI BLADE
	125986-05-000	EA	FUSE - 15 AMP - AUTO - MINI BLADE
	141789-01-000	EA	SPACER - CIRCUIT BREAKER

CONVERTER, INVERTER, LOAD CENTERS

KEY	PART NUMBER	U/M	DESCRIPTION
	099048-04-000	EA	INVERTER - 300 WATT

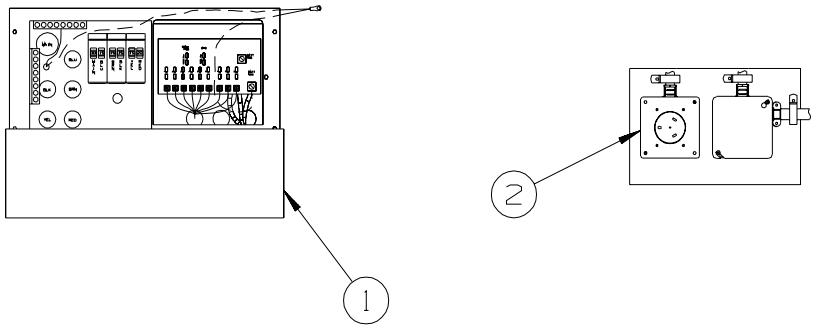

KEY	PART NUMBER	U/M	DESCRIPTION
1*	083208-06-000	EA	CONTROL CENTER - 45 AMP/120V/12V - W/O BREAKERS/ELECTRONIC FROM: 00-00-00 THRU: 01-13-05
1*	083208-07-000	EA	CONTROL CENTER - 45 AMP - 120V/12V - W/O BREAKERS FROM: 01-14-05 THRU: 99-99-99
2	024924-02-000	EA	RECEPTACLE - POWER CORD - W/PARTIAL PLATE

***COMPONENT PARTS LISTED LATER IN THIS GROUP**

COPYRIGHT © 2006 WINNEBAGO INDUSTRIES INC.

ELECTRICAL GROUP (CONTINUED)

COMPONENT PARTS FOR CONVERTER, INVERTER, LOAD CENTERS

083208-06-000

KEY	PART NUMBER	U/M	DESCRIPTION	VENDOR NO.
	083208-06-700	EA	DOOR W/LABEL	M7345DOOR
	083208-06-701	EA	CONVERTER ONLY (LOWER UNIT)	7345R

083208-07-000

KEY	PART NUMBER	U/M	DESCRIPTION	VENDOR NO.
	083208-06-701	EA	CONVERTER ONLY (LOWER UNIT)	7345R

COPYRIGHT © 2006 WINNEBAGO INDUSTRIES INC.

ELECTRICAL GROUP (CONTINUED)

BOXES & CORDS

KEY	PART NUMBER	U/M	DESCRIPTION
	008054-01-000	EA	CORD - POWER - 10/3 WIRE - 30 AMP - 25'
	115832-01-000	FT	CORD - HEAVY DUTY - 14-2 W/GROUND
	008289-01-000	EA	BOX - ELECTRIC/STEEL - 4" X 4" - 1/2" & 3/4" KNOCKOUTS
	133070-01-000	EA	BOX - ELECTRIC/PLASTIC - 3” X 2” X 2.8” - UL
	133070-02-000	EA	BOX - ELECTRIC/PLASTIC - 3” X 2” X 2.8” - CSA
	008294-01-000	EA	COVER - ELECTRIC BOX - BLANK/STEEL - 4" X 4" - GRAY
	069238-01-000	EA	COVER - ELECTRICAL BOX - W/HOLE - 4” X 4” - GRAY

WIRE ASSEMBLIES

KEY	PART NUMBER	U/M	DESCRIPTION
	106851-01-000	EA	WIRE ASSEMBLY - RUNNING LIGHTS - FUSE
	116894-01-000	EA	WIRE ASSEMBLY - SPEED SENSOR EXTENDED
	120269-08-000	EA	HARNESS/WIRE - F/ELECTRIC MIRRORS
	124882-10-000	EA	WIRE LOOM - AMPLIFIER - Q SURROUND FROM: 00-00-00 THRU: 03-27-05
	124882-11-000	EA	WIRE LOOM - AMPLIFIER - Q SURROUND FROM: 03-28-05 THRU: 99-99-99
	125853-04-000	EA	WIRE LOOM - ENTERTAINMENT CENTER
	134551-10-000	EA	WIRE ASSEMBLY - HEATER/TANKS - 2 PAD
	135420-08-000	EA	WIRE - RADIO - FORD C - 4 PIN FROM: 00-00-00 THRU: 05-29-05
	135420-17-000	EA	WIRE - RADIO - C FORD - 4 PIN FROM: 05-30-05 THRU: 99-99-99
	136514-02-000	EA	CABLE - MONITOR/CAMERA
	077069-03-000	EA	CABLE/EXTENSION - RADIO ANTENNA - 260"
	137135-03-000	EA	WIRE LOOM - DIGITAL ELEVATION SENSOR
	137135-04-000	EA	WIRE HARNESS - POWER - DIGITAL ELVATION SENSOR
	145210-01-000	FT	CABLE - COAXIAL
	151316-03-000	EA	WIRE ASM - W/NON CONTACT SENSORS - GREY WATER - 43.2"
	151316-06-000	EA	WIRE ASM - W/NON CONTACT SENSORS - GREY WATER - 78.6"
	151317-01-000	EA	WIRE ASM-W/NON CONTACT SENSORS-FRESH WATER/BLK TANK-3.9"
	151317-03-000	EA	WIRE ASM-W/NON CONTACT SENSORS-FRESH WATER/BLK TANK-43.2"
	151317-04-000	EA	WIRE ASM-W/NON CONTACT SENSORS-FRESH WATER/BLK TANK-62.9"

COPYRIGHT © 2006 WINNEBAGO INDUSTRIES INC.

ELECTRICAL GROUP (CONTINUED)

CONNECTORS & CONDUIT

KEY	PART NUMBER	U/M	DESCRIPTION
	007940-01-000	EA	RECEPTACLE/SLIDE 16 TO 12 AWG - FEMALE END
	007940-02-000	EA	RECEPTACLE/SLIDE 10 AWG
	007954-01-000	EA	RECEPTACLE - HOUSING - 6 POSITION
	007956-05-000	EA	INSULATOR - SHRINK - 1/4"ID X 1 1/2"
	008058-01-000	EA	ADAPTER - POWER CORD - 30 AMP TO 15 AMP
	008311-01-000	EA	CONNECTOR - WIRE NUT - INSULATED - RED
	008312-01-000	EA	CONNECTOR - WIRE NUT - INSULATED - BLUE
	008313-01-000	EA	CONNECTOR - WIRE NUT - INSULATED - YELLOW
	008314-01-000	EA	CONNECTOR - WIRE NUT - INSULATED - GRAY
	008328-01-000	EA	TERMINAL - RING - 12/10 WIRE - #10 STUD FIT
	008331-01-000	EA	TERMINAL - RING - TONGUE - #4 WIRE - 3/8" STUD - COPPER
	008348-01-000	EA	TERMINAL - RING - 3/8" STUD 2 GA. WIRE
	008355-01-000	EA	CONNECTOR - CABLE CLAMPING - 3/4"
	008356-01-000	EA	CONNECTOR - PLASTIC - 3/8"
	008356-02-000	EA	CONNECTOR - PLASTIC - 21/32"
	008398-01-000	EA	CONNECTOR - 1/2" X 90 DEGREE - FLEX CONDUIT - UL & CSA
	035416-04-000	EA	TERMINAL - RING - #10 STUD FIT - INSULATED BARREL #16/14
	041953-01-000	FT	CONDUIT - CONVOLUTE SLIT - .5" ID - POLYETHYLENE
	041953-02-000	FT	CONDUIT - CONVOLUTE SLIT - .6" ID - POLYETHYLENE
	041953-03-000	FT	CONDUIT - CONVOLUTE SLIT - 1" ID (CLOTHES ROD COVER)
	041953-06-000	FT	CONDUIT - CONVOLUTE SLIT - .4" ID - POLYETHYLENE
	041953-07-000	FT	CONDUIT - CONVOLUTE SLIT - .25" ID - POLYETHYLENE
	041953-08-000	FT	CONDUIT - CONVOLUTE SLIT - 1.5" ID - POLYETHYLENE
	041953-09-000	FT	CONDUIT - CONVOLUTE SLIT - .5" ID - NYLON
	041953-10-000	FT	CONDUIT - CONVOLUTE SLIT - .75" ID - NYLON
	041953-11-000	FT	CONDUIT - CONVOLUTE SLIT - 1.06" ID - NYLON
	041953-12-000	FT	CONDUIT - CONVOLUTE SOLID - 1.1" ID - NYLON
	041953-13-000	FT	CONDUIT - CONVOLUTE SLIT - 1.25" ID
	041953-14-000	FT	CONDUIT - CONVOLUTE SLIT - 1.5" ID
	041953-15-000	FT	CONDUIT - CONVOLUTE SLIT - 2"
	047443-01-000	EA	TERMINAL - .250 RECEPTACLE FIT - INSULATED - 16/14 AWG
	047443-02-000	EA	TERMINAL - .250 RECEPTACLE FIT - INSULATED - 12/10 AWG
	047443-05-000	EA	TERMINAL - .250 RECEPTICLE FIT - 18GA AWG
	058028-01-000	EA	CONNECTOR - ELECTRICAL PIGTAIL - NYLON - CLEAR
	077479-01-000	EA	BOOT - BATTERY TERMINAL - DOUBLE CABLE
	077479-02-000	EA	BOOT - BATTERY TERMINAL - SINGLE CABLE
	080015-02-000	EA	RECEPTACLE - FLAG - .185 - 16/14 GAUGE
	080015-03-000	EA	RECEPTACLE - FLAG - .250 - 14/16 GAUGE
	080015-04-000	EA	RECEPTACLE - FLAG - .187 - 16/14 GAUGE
	082109-01-000	EA	HOUSING - CONNECTOR - PACKARD
	087225-01-000	FT	SLEEVING - 1/2" - TYPE H
	087949-01-000	EA	BUSS BAR - 2 POSITION - .6" X 1.5"
	088473-01-000	EA	HOUSING - PIN - 12 CAVITY (3 ROWS OF 4)
	088473-02-000	EA	HOUSING - PIN - 15 CAVITY (3 ROWS OF 5)
	088473-03-000	EA	HOUSING - PIN - 9 CAVITY (3 ROWS OF 3)
	088473-04-000	EA	HOUSING - PIN - 8 CAVITY IN-LINE
	088473-06-000	EA	HOUSING - PIN - 6 CAVITY (2 ROWS OF 3)
	088473-07-000	EA	HOUSING - PIN - 5 CAVITY - IN-LINE
	088473-08-000	EA	HOUSING - PIN - 4 CAVITY - IN-LINE
	088473-09-000	EA	HOUSING - PIN - 3 CAVITY - IN-LINE
	088473-10-000	EA	HOUSING - PIN - 2 CAVITY - IN-LINE
	088473-12-000	EA	HOUSING - PIN - 3 CAVITY - BLUE
	088473-13-000	EA	HOUSING - PIN - 3 CAVITY - GREEN
	088473-14-000	EA	HOUSING - PIN - 3 CAVITY - RED
	088474-01-000	EA	HOUSING - SOCKET - 12 CAVITY
	088474-02-000	EA	HOUSING - SOCKET - 15 CAVITY
	088474-03-000	EA	HOUSING - SOCKET - 9 CAVITY
	088474-06-000	EA	HOUSING - SOCKET - 6 CAVITY
	088474-07-000	EA	HOUSING - SOCKET - 5 CAVITY
	088474-08-000	EA	HOUSING - SOCKET - 4 CAVITY
	088474-09-000	EA	HOUSING - SOCKET - 3 CAVITY
	088474-10-000	EA	HOUSING - SOCKET - 2 CAVITY
	088475-01-000	EA	PIN - CONNECTOR - 14-20 AWG
	088475-02-000	EA	PIN - CONNECTOR - 10-12 AWG

COPYRIGHT © 2006 WINNEBAGO INDUSTRIES INC.

ELECTRICAL GROUP (CONTINUED)

CONNECTORS & CONDUIT (CONTINUED)

KEY	PART NUMBER	U/M	DESCRIPTION
	088476-01-000	EA	TERMINAL - ELECTRICAL
	088476-02-000	EA	SOCKET - CONNECTOR - 12-10 GA - PRE-TIN
	098261-01-000	EA	SOCKET - CONNECTOR - WEATHERPACK - 12 AWG
	098261-02-000	EA	SOCKET - CONNECTOR - WEATHERPACK - 14-18 AWG
	098262-01-000	EA	SEAL - CONNECTOR - WEATHERPACK
	098264-01-000	EA	HOUSING - 2 PIN - WEATHER PACK - MALE W/FEMALE PINS
	098264-02-000	EA	HOUSING - 2 PIN - WEATHER PACK - FEMALE W/MALE PINS
	098265-02-000	EA	PIN - CONNECTOR - WEATHER PACK
	102777-02-000	EA	TERMINAL - RING - #6 STUD - 10 AWG
	103608-01-000	EA	SOCKET - WEDGE BASE W/LEADS
	104100-01-000	EA	HOUSING - 1 POSITION - 75 AMPS
	104100-03-000	EA	TERMINAL - 75 AMP
	106007-02-000	EA	TERMINAL - FEMALE - 10-12 AWG
	110178-01-000	EA	HOUSING - WIPER MOTOR
	112823-01-000	EA	SPLICE - REDUCER - 16-14 TO 18-22
	113135-01-000	EA	TERMINAL - FEMALE - M/P - 14-16 - F/SEALED TERMINAL
	113308-01-000	EA	TERMINAL - FEMALE - M/P - 14-16 - 280
	115931-02-000	EA	COVER - CONNECTOR - 50 AMP W/LOCKING RING
	115932-02-000	EA	CONNECTOR - FEMALE - 50 AMP/240 VOLT
	118571-01-000	EA	CONNECTOR - 3-WAY - MALE/SEALED
	118571-02-000	EA	CONNECTOR - 3-WAY - FEMALE/SEALED
	118571-05-000	EA	LOCK - SECONDARY - FEMALE
	118571-06-000	EA	LOCK - SECONDARY - MALE
	118820-01-000	EA	INSULATOR - TERMINAL
	129233-01-000	EA	HOUSING - 2-POSITION/FEMALE - 280-SERIES
	131681-01-000	EA	CONNECTOR - 3/4" SO CORD - UL/CS
	137207-01-000	EA	HOUSING - PIN - 2 CAVITY/HIGH AMP
	137208-01-000	EA	HOUSING - SOCKET - 2 CAVITY/HIGH AMP
	137209-01-000	EA	PIN - CONNECTOR - 10 AWG/HIGH AMP
	137210-01-000	EA	SOCKET - CONNECTOR - 10 AWG/HIGH AMP
	142520-01-000	EA	TERMINAL - FEMALE - MINI-FIT 16
	142522-02-000	EA	HOUSING - 6 PIN/MALE - MINI FIT
	142522-04-000	EA	HOUSING - 10 PIN/MALE - MINI FIT
	142522-05-000	EA	HOUSING - 12 PIN/MALE - MINI FIT
	142522-06-000	EA	HOUSING - 14 PIN/MALE - MINI FIT
	142524-01-000	EA	HOUSING - 4 PIN/FEMALE - WEATHER PACK
	142524-02-000	EA	HOUSING - 4 PIN/FEMALE - WEATHER PACK
	144283-01-000	EA	CONNECTOR - 110V - F/USE WITH SOW WIRE - BLUE
	144283-02-000	EA	CONNECTOR - 110V - F/USE WITH NM ROMEX WIRE - CLEAR
	145171-01-000	EA	CONNECTOR - COAXIAL
	148335-01-000	EA	HOUSING - 8-POSITION/MALE - 280-GT SERIES
	148335-02-000	EA	HOUSING - 4-POSITION/MALE - 280-GT SERIES
	149686-01-000	EA	TERMINAL - .250 RECEPTACLE
	149687-01-000	EA	HOUSING - 2 POSITION/MALE - PACKARD
	149687-02-000	EA	LOCK - F/2 POSITION HOUSING - PACKARD
	149688-01-000	EA	TERMINAL - MALE - 16 GAUGE WIRE
	154799-01-000	EA	HOUSING - 4-POSITION/FEMALE - 150-SERIES
	154799-02-000	EA	LOCK - SECONDARY - 4 POSITION
	156035-01-000	EA	HOUSING - 12-POSITION/FEMALE - 280-GT SERIES
	156041-01-000	EA	TERMINAL - FEMALE - 16-12 - 280-GT SERIES
	156043-01-000	EA	HOUSING - 2-POSITION/FEMALE - 480-MP SERIES
	156043-02-000	EA	LOCK - F/2 POSITION HOUSING - 480 SERIES
	156044-01-000	EA	TERMINAL - FEMALE - 16-12 - 280-GT - F/SEALED HOUSING
	156045-01-000	EA	HOUSING - 10-POSITION/FEMALE - 280-GT SERIES
	156045-02-000	EA	HOUSING - 4-POSITION/FEMALE - 280-GT SERIES

COPYRIGHT © 2006 WINNEBAGO INDUSTRIES INC.

ELECTRICAL GROUP (CONTINUED)

CHASSIS

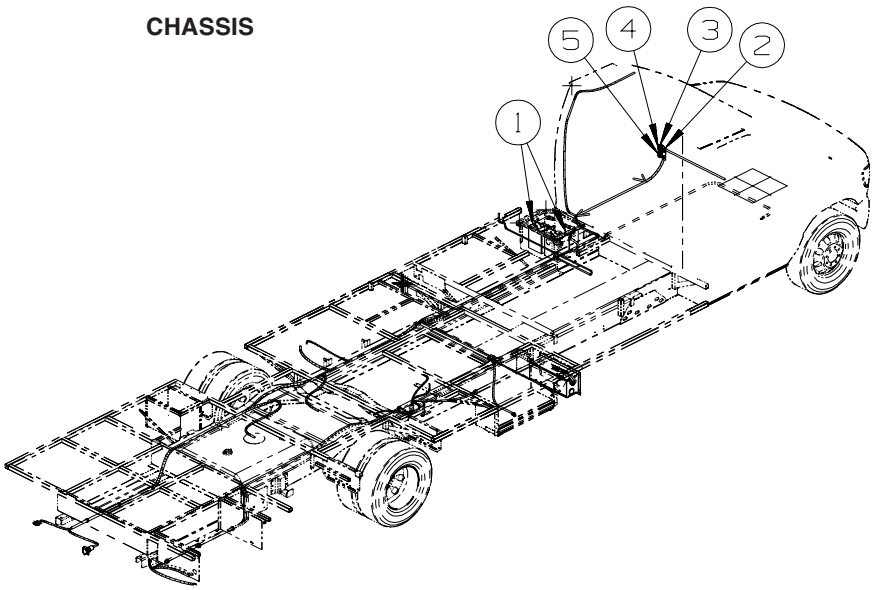

KEY	PART NUMBER	U/M	DESCRIPTION
1	065450-05-000	EA	TIEDOWN - BATTERY - 8.4" TUBE
1	065451-05-000	EA	BRACKET/TIEDOWN - BATTERY - 7.7" FROM BRKT TO BRKT
2	145731-01-01A	EA	LABEL - SWITCH - RADIO/BATTERY - BLACK
3	144363-12-04B	EA	PLATE - SWITCH - BLACK
4	108357-08-000	EA	SWITCH - ROCKER - DPDT - 0N/NONE/ON - 6 TERM - W/O COVER
4	108356-02-01A	EA	COVER/ACTUATOR SWITCH - 2 ROWS DIMPLES - BLACK
4	108355-01-000	EA	HOUSING - SWITCH
5	108357-09-000	EA	SWITCH - ROCKER - SPDT - ON/NONE/MOM - 3 TERM - W/O COVER
5	108356-02-01A	EA	COVER/ACTUATOR SWITCH - 2 ROWS DIMPLES - BLACK
5	108355-01-000	EA	HOUSING - SWITCH

COPYRIGHT © 2006 WINNEBAGO INDUSTRIES INC.

ELECTRICAL GROUP (CONTINUED)

CHASSIS (CONTINU8ED)

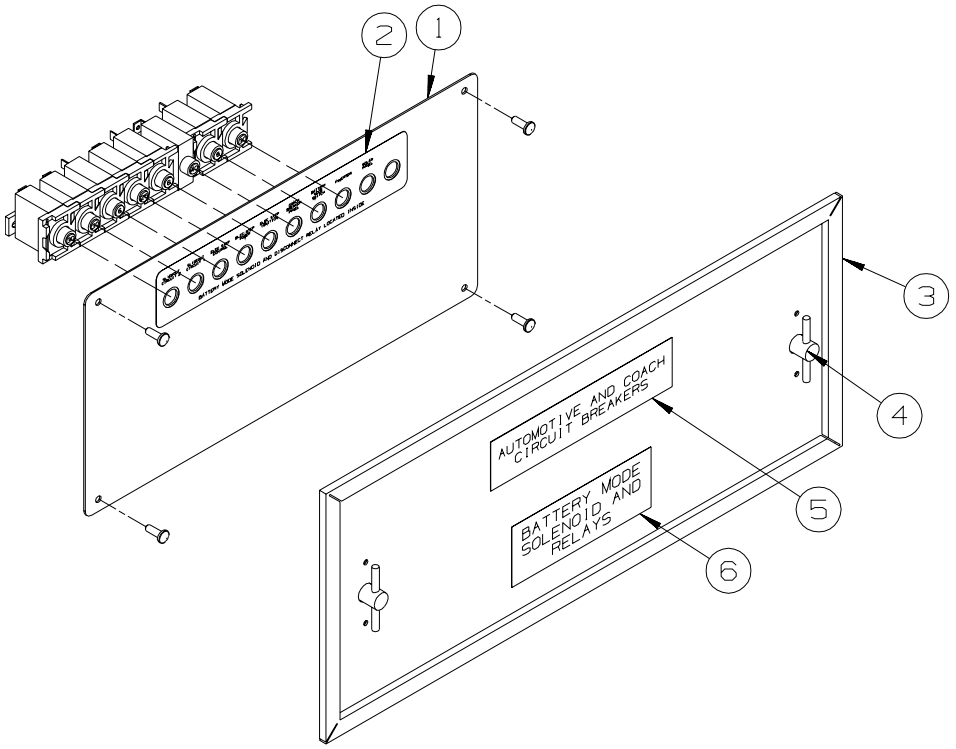

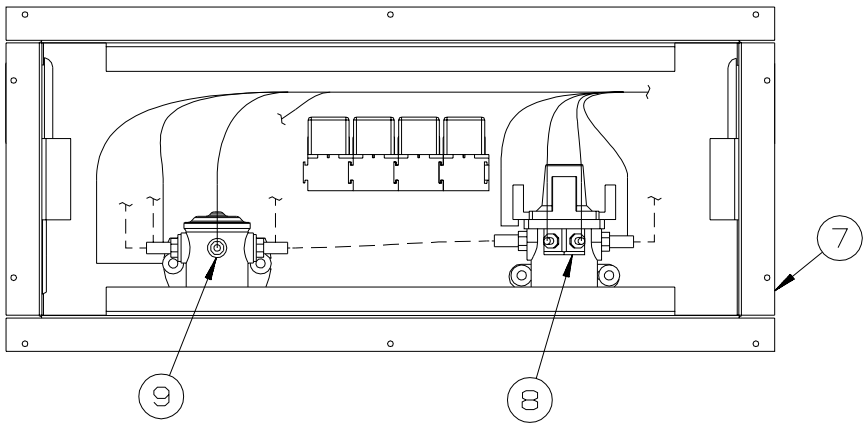

KEY	PART NUMBER	U/M	DESCRIPTION
1	139067-09-02B	EA	PLATE - CIRCUIT BREAKER/HOUSE - E-COATED
2	093236-38-000	EA	LABEL - CIRCUIT BREAKER
3	141273-04-02B	EA	COVER - ELECTRICAL BOX - E-COATED
4	098196-01-000	EA	LATCH - 1/4 TURN - T-BAR
5	098379-01-000	EA	LABEL - CIRCUIT BREAKER - FRONT BOX
6	098379-04-000	EA	LABEL - ELECTRICAL BOX - SIDE
7	155605-01-02B	EA	BOX - ELECTRICAL - E-COATED
8	086273-01-000	EA	RELAY - BATTERY DISCONNECT
9	008188-01-000	EA	SOLENOID - 3 POST - BATTERY CHANGE OVER

COPYRIGHT © 2006 WINNEBAGO INDUSTRIES INC.

EXTERIOR BODY GROUP

GRAPHICS & PAINT

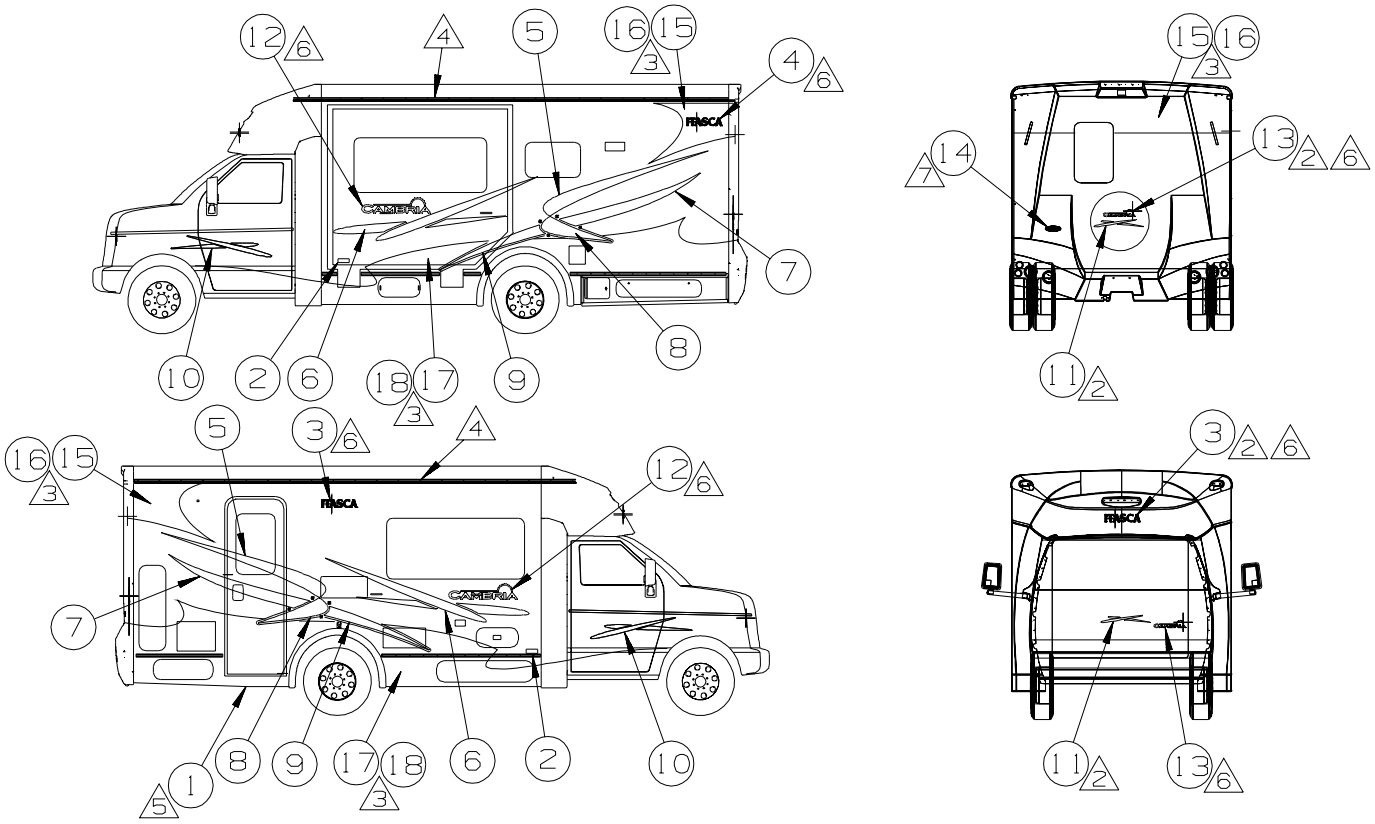

NOTES:

1. APPLY PROTECTOR 116424-01-000 TO WATER HEATER DOOR LATCH.

2. CENTER ON UNIT.

3. CLEAR COAT TO BE APPLIED ON PAINTED AREAS TO PROTECT PAINT.

4. USE PROTECTIVE FILM 145487-02-000 TO COVER UNSEALED ROOF SEAMS.

5. FILM TO PROTECT BOTTOM OF DOOR FROM SCUFF MARKS.

6. LOGO IS TO BE HELD TO ± 1MM ON A HORIZONTAL PLANE (END TO END).

7. CENTER BADGE ON SURFACE.

(26H) EXT GRAPHICS-DELUXE PKG #2
(26F) EXT GRAPHICS-DELUXE, PKG #1
(92K) EXTERIOR GRAPHICS PACKAGE #2
(27G) EXTERIOR GRAPHICS PACKAGE #1

KEY	PART NUMBER	U/M	DESCRIPTION
1	109506-01-000	EA	FILM-URETHANE PROTECTOR
2	132664-02-CHT(01A)	EA	DECAL-WINNEBAGO,DOMED - CHROME/RED/BLACK
(27G) 3 (92K)	144587-03-CHT(09A)	EA	DECAL-ITASCA - LT GOLD/BRT WHITE
(27G) 4	144587-03-CHT(10A)	EA	DECAL-ITASCA - BRT WHITE/CANYON RED
4 (92K)	144587-03-CHT(11A)	EA	DECAL-ITASCA - BRT WHITE/LT GOLD
(27G) 5	149915-01-CHT(02A)	EA	DECAL-SLASH #1,RH - CHARCOAL
5 (92K)	149915-01-CHT(03A)	EA	DECAL-SLASH #1,RH - SUNSET
(27G) 5	149915-02-CHT(02A)	EA	DECAL-SLASH #1,LH - CHARCOAL
5 (92K)	149915-02-CHT(03A)	EA	DECAL-SLASH #1,LH - SUNSET
(27G) 6	149916-01-CHT(02A)	EA	DECAL-SLASH #2,RH - DK COPPER/LT GOLD
6 (92K)	149916-01-CHT(03A)	EA	DECAL-SLASH #2,RH - IVY GREEN/DEEP BROWN DIAMOND
(27G) 6	149916-02-CHT(02A)	EA	DECAL-SLASH #2,LH - DK COPPER/LT GOLD
6 (92K)	149916-02-CHT(03A)	EA	DECAL-SLASH #2,LH - IVY GREEN/DEEP BROWN DIAMOND
(27G) 7	149918-01-CHT(02A)	EA	DECAL-SLASH #3,RH - LT GOLD/CANYON RED
7 (92K)	149918-01-CHT(03A)	EA	DECAL-SLASH #3,RH - DEEP BROWN DIAMOND/LT GOLD
(27G) 7	149918-02-CHT(02A)	EA	DECAL-SLASH #3,LH - LT GOLD/CANYON RED
7 (92K)	149918-02-CHT(03A)	EA	DECAL-SLASH #3,LH - DEEP BROWN DIAMOND/LT GOLD
(27G) 8	149920-01-CHT(02A)	EA	DECAL-SLASH #4,RH - CHARCOAL
8 (92K)	149920-01-CHT(03A)	EA	DECAL-SLASH #4,RH - SUNSET
(27G) 8	149920-02-CHT(02A)	EA	DECAL-SLASH #4,LH - CHARCOAL
8 (92K)	149920-02-CHT(03A)	EA	DECAL-SLASH #4,LH - SUNSET
(27G) 9	149921-01-CHT(02A)	EA	DECAL-SLASH #5,RH - CANYON RED
9 (92K)	149921-01-CHT(03A)	EA	DECAL-SLASH #5,RH - LT GOLD
(27G) 9	149921-02-CHT(02A)	EA	DECAL-SLASH #5,LH - CANYON RED
9 (92K)	149921-02-CHT(03A)	EA	DECAL-SLASH #5,LH - LT GOLD
(27G) 10	149922-01-CHT(02A)	EA	DECAL-CAB DOOR SLASH,RH - DK COPPER/CANYON RED
10 (92K)	149922-01-CHT(03A)	EA	DECAL-CAB DOOR SLASH,RH - IVY GREEN/DEEP BROWN DIAMOND
(27G) 10	149922-02-CHT(02A)	EA	DECAL-CAB DOOR SLASH,LH - DK COPPER/CANYON RED
10 (92K)	149922-02-CHT(03A)	EA	DECAL-CAB DOOR SLASH,LH - IVY GREEN/DEEP BROWN DIAMOND
(27G) 11	149923-01-CHT(02A)	EA	DECAL-HOOD SLASH - DK COPPER/CANYON RED
11 (92K)	149923-01-CHT(03A)	EA	DECAL-HOOD SLASH - IVY GREEN/DEEP BROWN DIAMOND
12	150103-01-CHT(01A)	EA	DECAL-CAMBRIA,LG - BRT GOLD/BLACK/WARM SILVER/CHARCOAL
13	150103-02-CHT(01A)	EA	DECAL-CAMBRIA,SML - BRT GOLD/BLACK/WARM SILVER/CHARCOAL
14	151687-02-CHT(01A)	EA	DECAL/BEZEL,ITASCA,DOMED - CHROME/WHITE/BLACK/TEAL
(27G) 15	141599- -000	GL	PAINT-BURGUNDY MET - SHERWIN WILLIAMS #30926
16 (92K)	141599- -000	GL	PAINT-MOJAVE BEIGE MET - SHERWIN WILLIAMS #62879
(27G) 17	141599- -000	GL	PAINT-LT ALMOND MET - SHERWIN WILLIAMS #61894
18 (92K)	141599- -000	GL	PAINT-SEDONA BRONZE MET - SHERWIN WILLIAMS #60751

COPYRIGHT © 2006 WINNEBAGO INDUSTRIES INC.

EXTERIOR BODY GROUP (CONTINUED)

GRAPHICS & PAINT (CONTINUED)

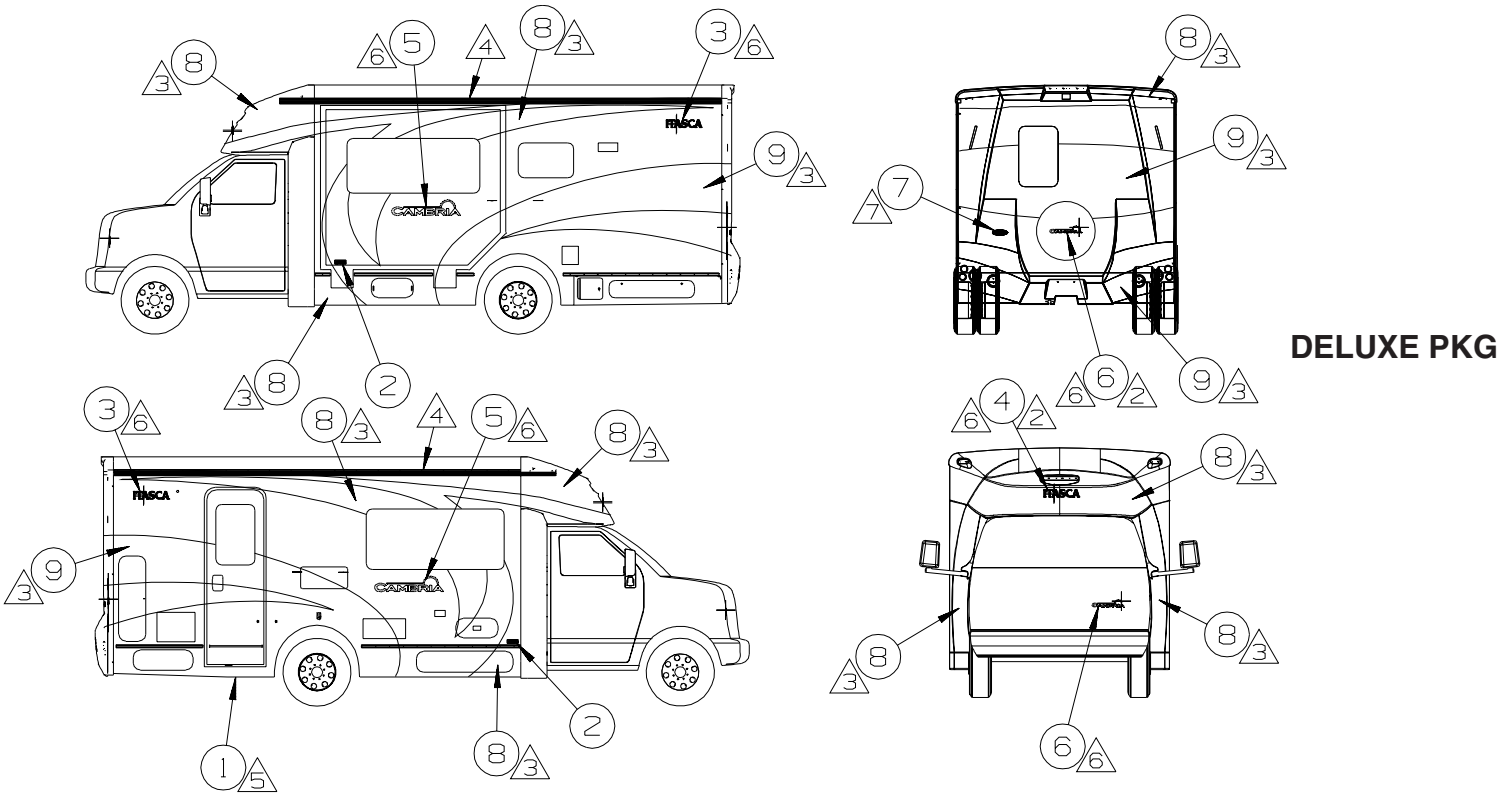

26F KEY	PART NUMBER	U/M	DESCRIPTION - BRONZED GRAY
1	109506-01-000	EA	FILM-URETHANE PROTECTOR
2	132664-02-CHT(01A)	EA	DECAL-WINNEBAGO,DOMED - CHROME/RED/BLACK
3	144587-03-CHT(12A)	EA	DECAL-ITASCA - BRONZED GRAY/BRT WHITE
4	144587-03-CHT(14A)	EA	DECAL-ITASCA - BRT WHITE/BRONZED GRAY
5	150103-01-CHT(01A)	EA	DECAL-CAMBRIA,LG - BRT GOLD/BLACK/WARM SILVER/CHARCOAL
6	150103-02-CHT(01A)	EA	DECAL-CAMBRIA,SML - BRT GOLD/BLACK/WARM SILVER/CHARCOAL
7	151687-02-CHT(01A)	EA	DECAL-/BEZEL,ITASCA,DOMED - CHROME/WHITE/BLACK/TEAL
8	----------	GL	PAINT-SILVER MET - SHERWIN WILLIAMS #43638
9	----------	GL	PAINT-BRONZED GRAY MET - SHERWIN WILLIAMS #60813

26H KEY	PART NUMBER	U/M	DESCRIPTION - DARK PLLUM
1	109506-01-000	EA	FILM-URETHANE PROTECTOR
2	132664-02-CHT(01A)	EA	DECAL-WINNEBAGO,DOMED - CHROME/RED/BLACK
3	144587-03-CHT(12A)	EA	DECAL-ITASCA - BRONZED GRAY/BRT WHITE
4	144587-03-CHT(14A)	EA	DECAL-ITASCA - BRT WHITE/BRONZED GRAY
5	150103-01-CHT(01A)	EA	DECAL-CAMBRIA,LG - BRT GOLD/BLACK/WARM SILVER/CHARCOAL
6	150103-02-CHT(01A)	EA	DECAL-CAMBRIA,SML - BRT GOLD/BLACK/WARM SILVER/CHARCOAL
7	151687-02-CHT(01A)	EA	DECAL-/BEZEL,ITASCA,DOMED - CHROME/WHITE/BLACK/TEAL
8	----------	GL	PAINT-SILVER MET - SHERWIN WILLIAMS #43638
9	----------	GL	PAINT-PURPLE PEARL - SHERWIN WILLIAMS #46838

KEY	PART NUMBER	U/M	DESCRIPTION
	072882-01-000	EA	PAINT - LOW BAKE - OFF WHITE
	116424-01-000	EA	PROTECTOR - LATCH - WATER HEATER

DUPONT COLOR CODES ARE NOW FOUND IN THE PAINT CODE MANUAL.
YOU CAN FIND THIS MANUAL ON YOUR DEALER INDEX WEBPAGE UNDER SERVICE.

COPYRIGHT © 2006 WINNEBAGO INDUSTRIES INC.

EXTERIOR BODY GROUP (CONTINUED)

PANELS & TRIMS

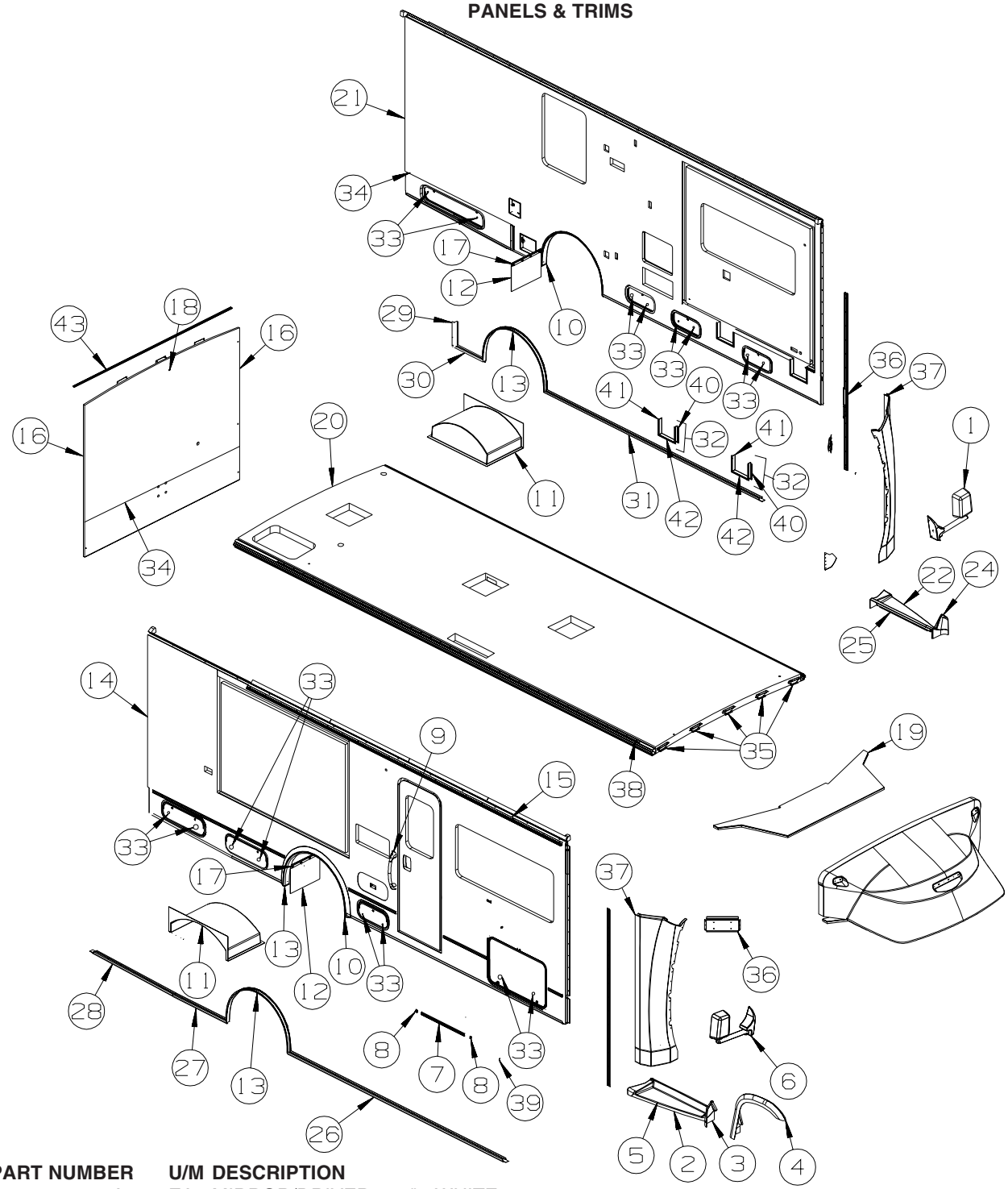

KEY	PART NUMBER	U/M	DESCRIPTION
1*	133908-15-01A	EA	MIRROR/DRIVER - 96" - WHITE
1*	133908-17-01A	EA	MIRROR/DRIVER - 96" - HEATED/REMOTE - WHITE - MIRRORS-EXTERIOR W/DEFROST
1*	133908-17-03A	EA	MIRROR/DRIVER - 96" - HEATED/REMOTE - SILVER - MIRRORS-EXTERIOR W/DEFROST - DELUXE
2	149604-03-01A	EA	RUNNING BOARD/WEDGE - PASSENGER - FORD 700 - PRIMED
	149604-09-000	EA	HARDWARE KIT (RUNNING BOARD INSTALL)
3	149604-05-01A	EA	MUD FLAP - FIBERGLASS - PASSENGER
4	149604-07-01A	EA	WHEEL LIP - FIBERGLASS - PASSENGER
5	146515-03-01A	EA	MAT - ANTI SLIP - RIGHT HAND - BLACK
6*	133908-14-01A	EA	MIRROR/PASSENGER - 96" - WHITE
6*	133908-16-01A	EA	MIRROR/PASSENGER - 96" - HEATED/REMOTE - WHITE - MIRRORS-EXTERIOR W/DEFROST
6*	133908-16-03A	EA	MIRROR/PASSENGER - 96" - HEATED/RMT - SILVER - MIRRORS-EXTERIOR W/DEFROST - DELUXE
7	108688-06-03A	EA	STRIP - FEATURE - W/O INSERT/END CAPS - 96.9" - BRIGHT WHT
8	108651-01-01A	EA	END CAP - FEATURE STRIP
9	152854-01-01A	EA	HANDLE - ASSIST - WHITE W/BLACK RUBBER GRIP - 18 5/8"
10	148210-01-10A	EA	TRIM - REAR WHEELWELL - BLACK
11	147951-03-000	EA	WHEELWELL - PLASTIC

COPYRIGHT © 2006 WINNEBAGO INDUSTRIES INC.

EXTERIOR BODY GROUP (CONTINUED)

PANELS & TRIMS (CONTINUED)

KEY	PART NUMBER	U/M	DESCRIPTION
12	017516-01-000	EA	MUD FLAP - 14"H X 18"W - W/O MOUNTING HOLES - RUBBER - BLK
13	148255-01-01A	EA	TRIM - SIDEWALL - U CHANNEL - PVC - .5" X 1.7" X 42"
14	155023-01-T47	EA	SIDEWALL - PASSENGER - W/O WINDOWS/TRIMS (T47, T48)
14	155023-01-T43	EA	SIDEWALL - PASSENGER - W/O WINDOWS/TRIMS (T49, T50)
14	155023-01-T41	EA	SIDEWALL - PASSENGER - W/O WINDOWS/TRIMS (T51, T52)
15	131483-01-01A	EA	RAIL - AWNING - 192" - BRIGHT WHITE
			FROM: 00-00-00 THRU: 10-02-05
15	157284-01-01A	EA	RAIL - AWNING - 192" - BRIGHT WHITE
			FROM: 10-03-05 THRU: 99-99-99
16	132273-01-02B	EA	BRACKET - REAR TRIM - E-COATED - NOT ILLUSTRATED
			FROM: 00-00-00 THRU: 10-17-05
16	156622-01-01A	FT	SEALER - TAPE - 1/4"THICK X 3"WIDE X 100 FT
			FROM: 10-18-05 THRU: 99-99-99
17	140922-01-02B	EA	RETAINER - MUD FLAP - 1" X 17.7" - E-COATED/BLACK
18	155025-01-T47	EA	BACKWALL/INNER - W/O REAR CAP (T47, T48)
18	155025-01-T43	EA	BACKWALL/INNER - W/O REAR CAP (T49, T50)
18	155025-01-T41	EA	BACKWALL/INNER - W/O REAR CAP (T51, T52)
19	P49312-01-S34	EA	SLEEPERBOARD
20	156143-01-T41	EA	ROOF - W/O LIGHTS/VENTS - W/WIRING
21	155024-01-T47	EA	SIDEWALL - DRIVER - W/O WINDOWS/TRIMS (T47, T48)
21	155024-01-T43	EA	SIDEWALL - DRIVER - W/O WINDOWS/TRIMS (T49, T50)
21	155024-01-T41	EA	SIDEWALL - DRIVER - W/O WINDOWS/TRIMS (T51, T52)
22	146515-04-01A	EA	MAT - ANTI SLIP - LEFT HAND - BLACK
23	149604-08-01A	EA	WHEEL LIP - FIBERGLASS - DRIVER
24	149604-06-01A	EA	MUD FLAP - FIBERGLASS - DRIVER
25	149604-04-01A	EA	RUNNING BOARD/WEDGE - DRIVER - FORD 700 - PRIMED
	149604-09-000	EA	HARDWARE KIT (RUNNING BOARD INSTALL)
26	148700-14-01A	EA	TRIM - SIDEWALL/BOTTOM - 133.2" - LH NOTCH - BRIGHT WHITE
27	148700-15-01A	EA	TRIM - SIDEWALL/BOTTOM - 32.9" - BRIGHT WHITE
28	148700-03-01A	EA	TRIM - SIDEWALL/BOTTOM - 50.6" - RH NOTCH - BRIGHT WHITE
29	154678-01-01A	EA	TRIM - SIDEWALL - 12.6" - BRIGHT WHITE - NOT ILLUSTRATED
			FROM: 00-00-00 THRU: 07-28-05
29	156772-01-01A	EA	TRIM - SIDEWALL - 12.6" - BRIGHT WHITE
			FROM: 07-29-05 THRU: 99-99-99
30	148700-12-01A	EA	TRIM - SIDEWALL/BOTTOM - 17.4" - LH NOTCH - BRIGHT WHITE
31	148700-13-01A	EA	TRIM - SIDEWALL/BOTTOM - 133.2" - RH NOTCH - BRIGHT WHITE
32	148736-01-S34	EA	TRIM - SIDEWALL
33	153498-01-02A	EA	BUMPER - RUBBER - BLACK
34	104692-01-000	FT	SEAL - ADHESIVE BACKED FOAM - 3/4" THICK X 3/4" WIDE X 25'
35	134774-02-02B	EA	BRACKET - CAP ATTACHMENT - E-COATED
36	149392-01-02B	EA	BRACKET - TRANSITION/LOWER - E-COATED
37	112160-01-000	FT	SEAL - D SECTION - .2 X .3" - FOAM RUBBER
38	142123-05-01A	EA	RAIL/AWNING - 220.5" - BRIGHT WHITE
			FROM: 08-11-05 THRU: 99-99-99
39	105312-01-07A	EA	INSERT - FEATURE STRIP - VINYL - BRIGHT WHITE
40	137970-13-02A	EA	TRIM - SIDEWALL - 8.3"
41	137970-14-02A	EA	TRIM - SIDEWALL - 8.3"
42	137970-15-02A	EA	TRIM - SIDEWALL - 11"
43	114248-02-01A	EA	ANGLE - PLASTIC - .7” X .4” X 96.7” - MODERN IVORY

***COMPONENT PARTS LISTED LATER IN THIS GROUP**

COPYRIGHT © 2006 WINNEBAGO INDUSTRIES INC.

EXTERIOR BODY GROUP (CONTINUED)

PANELS & TRIMS (CONTINUED)

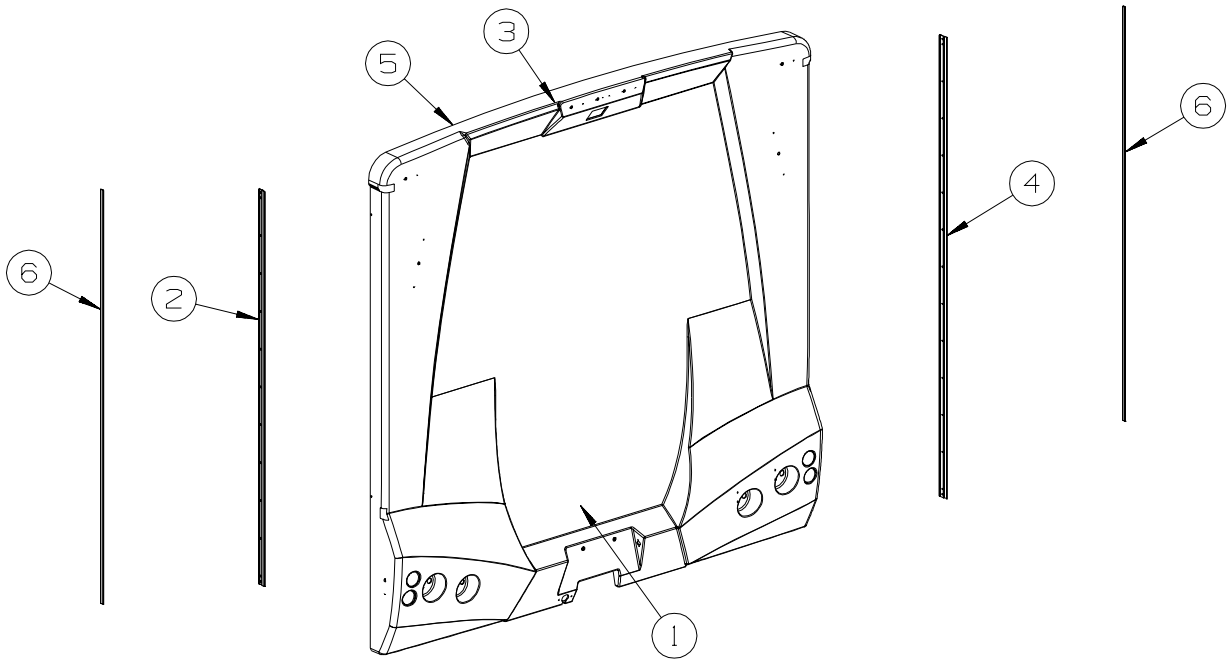

KEY	PART NUMBER	U/M	DESCRIPTION
1	155622-03-T41	EA	PANEL - REAR CAP - W/O CAMERA MOUNT
1	155622-04-T41	EA	PANEL - REAR CAP - W/CAMERA MOUNT - REARVIEW MONITOR SYS W/AUDIO
2	092041-13-01A	EA	TRIM - FRONT/REAR CAP (SIDEWALL) - 73.8” - BRIGHT WHITE FROM: 00-00-00 THRU: 10-17-05
2	092041-08-01A	EA	TRIM - FRONT/REAR CAP (SIDEWALL) - 86.6" - BRIGHT WHITE FROM: 10-18-05 THRU: 99-99-99
3	083805-08-000	EA	TRIM - ROOF CAP - 87.9" - MILL
4	092041-08-01A	EA	TRIM - FRONT/REAR CAP (SIDEWALL) - 86.6" - BRIGHT WHITE
5	104692-03-000	EA	SEAL - ADHESIVE BACKED FOAM - 1" THICK X 1 3/16"WIDE X 15'
6	091985-01-07A	EA	INSERT - TRIM - REAR CAP TO SIDEWALL - .66" - BRIGHT WHITE

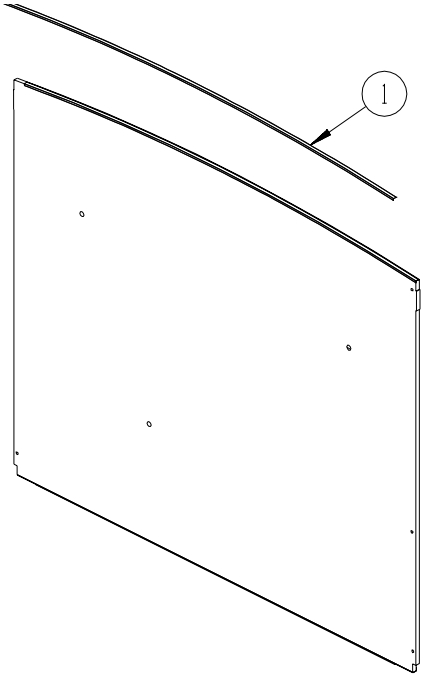

KEY	PART NUMBER	U/M	DESCRIPTION
1	114248-02-01A	EA	ANGLE - PLASTIC - .7” X .4” X 96.7” - MODERN IVORY

COPYRIGHT © 2006 WINNEBAGO INDUSTRIES INC.

EXTERIOR BODY GROUP (CONTINUED)

COMPONENT PARTS FOR PANELS & TRIMS

133908-14 & 133908-15-01A/02A

KEY	PART NUMBER	U/M	DESCRIPTION	VENDOR NO.
	117051-01-700	EA	MIRROR-CONVEX	723068-4
	120269-01-700	EA	GLASS KIT W/BEZEL RH/LH	709407-8
	133908-03-700	EA	CAP - RECT/BLACK-W/O LIGHT	709577
	133908-04-700	EA	CAP-MIRROR/ROUND - W/O LIGHT	7095470

133908-01 THRU 133908-08, 133908-10 THRU 133908-13, 133908-16, 133908-17, -01A/-02A/-03A

KEY	PART NUMBER	U/M	DESCRIPTION	VENDOR NO.
	117051-01-700	EA	MIRROR-CONVEX	723068-4
	120269-05-701	EA	GLASS-HTD/REM RH/LH W/CONVEX	709411
	133908-03-700	EA	CAP - RECT/BLACK-W/O LIGHT	709557
	133908-04-700	EA	CAP-MIRROR/ROUND - W/O LIGHT	7095470

COPYRIGHT © 2006 WINNEBAGO INDUSTRIES INC.

EXTERIOR BODY GROUP (CONTINUED)

FRONT END

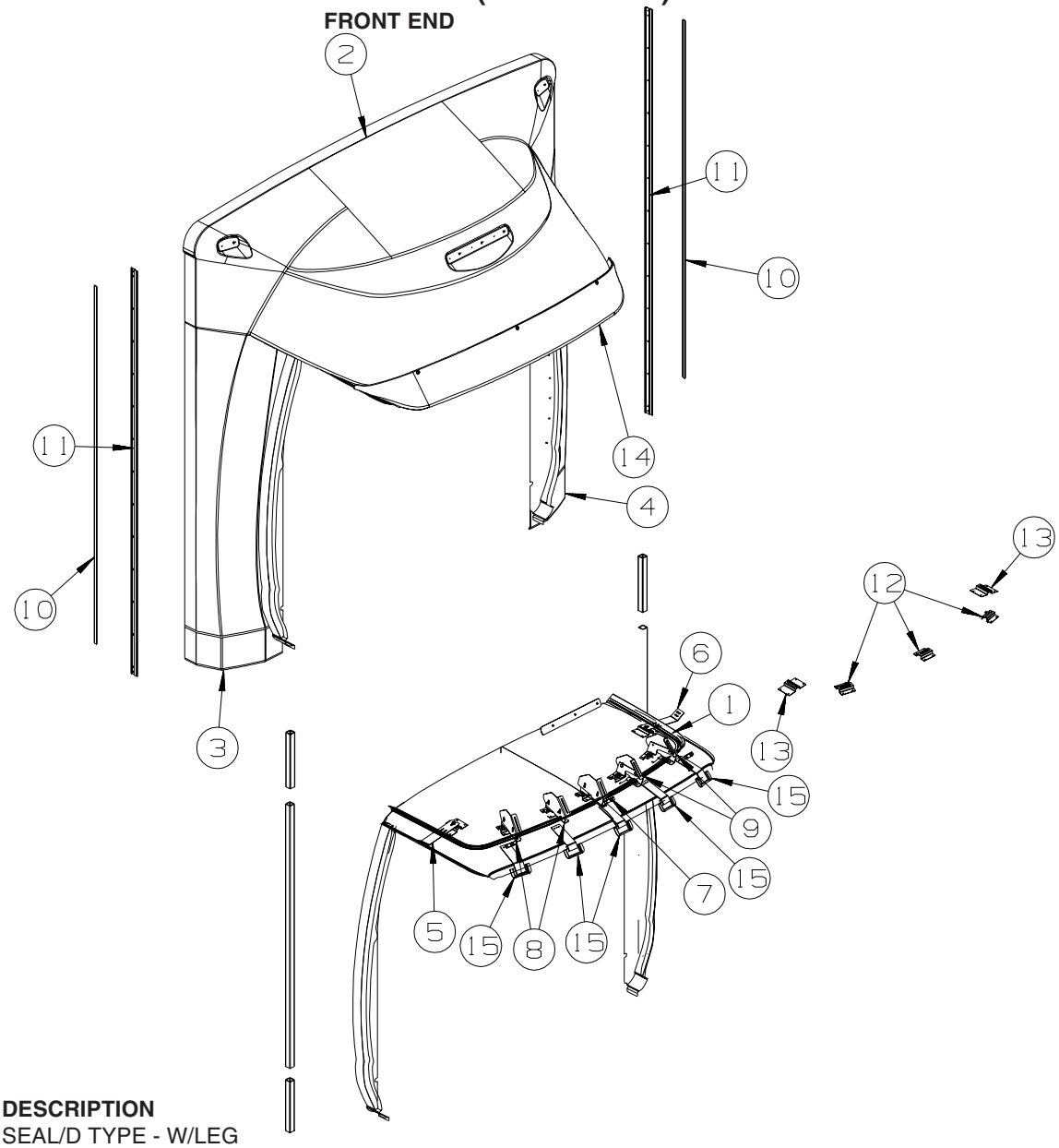

KEY	PART NUMBER	U/M	DESCRIPTION
1	149470-01-000	FT	SEAL/D TYPE - W/LEG
2	149543-01-S34	EA	PANEL - FRONT W/TRANSITION PANEL/ROOF CAP
3	148300-03-S34	EA	PANEL - TRANSITION - RIGHT HAND
4	148300-04-S34	EA	PANEL - TRANSITION - LEFT HAND
5	149505-01-02B	EA	BRACKET - ROOF CAP/RIGHT HAND - E-COATED
6	149505-02-02B	EA	BRACKET - ROOF CAP/LEFT HAND - E-COATED
7	149522-01-02B	EA	BRACKET - FRONT/ROOF CAP - CENTER - E-COATED
8	149522-02-02B	EA	BRACKET - FRONT/ROOF CAP - RIGHT HAND - E-COATED
9	149522-03-02B	EA	BRACKET - FRONT/ROOF CAP - LEFT HAND - E-COATED
10	091985-01-07A	EA	INSERT - TRIM - REAR CAP TO SIDEWALL - .66" - BRIGHT WHITE
11	092041-14-01A	EA	TRIM - FRONT/REAR CAP (SIDEWALL) - 87.8" - BRIGHT WHITE
12	143322-01-02B	EA	CHANNEL - HAT - MOUNT/CAP - E-COATED
13	143322-02-02B	EA	CHANNEL - HAT - MOUNT/CAP - E-COATED
14	149342-02-S34	EA	VISOR - ROOF CAP
15	151497-01-01A	EA	POCKET - VISOR - PLASTIC - BRIGHT WHITE

LADDER

KEY	PART NUMBER	U/M	DESCRIPTION
	129639-08-01A	EA	LADDER - 5 STEP - 71.85" - BRUSHED ALUMINUM
	129639-10-01A	EA	LADDER - 5 STEP - 72.4" - BRUSHED ALUMINUM - 729H
	150785-03-01A	EA	LADDER - LOWER - 35.4"/3 STEP W/DOG LEG - HINGED STANDOFF
	150785-07-01A	EA	LADDER - LOWER - 35.4"/3 STEP W/DOG LEG - HINGED STANDOFF - 729H
	129375-02-000	EA	SEAL - LADDER BRACKET

COPYRIGHT © 2006 WINNEBAGO INDUSTRIES INC.

EXTERIOR BODY GROUP (CONTINUED)

STRUCTURAL COMPONENTS

KEY	PART NUMBER	U/M	DESCRIPTION
	002726-01-001	EA	GARNISH - U-CHANNEL - 1.38" X 19' - SERRATED
	002766-01-001	EA	ANGLE - EXTRUDED - 1" X 1 1/2" X 17'
	077517-62-000	EA	FIBERGLASS SHEET - 48" X 96" - BRIGHT WHITE
	089297-01-000	SF	PLYWOOD - LUAN - OVERLAY GRADE - 4' X 8'
	089297-03-000	SF	PLYWOOD - LUAN - OVERLAY GRADE - 4' X 8.3'
	100619-01-000	BF	FOAM - EXPANDED POLYSTYRENE - 1.34" X 48" X 96"
	100619-02-000	BF	FOAM - EXPANDED POLYSTYRENE - 1.5" X 48" X 96"
	100619-04-000	BF	FOAM - EXPANDED POLYSTYRENE - .5" X 48" X 96"
	100619-05-000	BF	FOAM - EXPANDED POLYSTYRENE - .75" X 48" X 96"-1.5"DENSITY
	100619-16-000	BF	FOAM - EXPANDED POLYSTYRENE - .75" X 48" X 96"-2" DENSITY
	100619-27-000	BF	FOAM - EXPANDED POLYSTYRENE - 3" X 48" X 92.8"
	116942-03-01A	LB	ALUMINUM - .7" X 40" X 158"
	120107-01-000	EA	FOAM - ROOF COVE - 2.8" X 48" LONG
	120107-02-000	EA	FOAM - PLUG - ROOF TUBE - 2.2" X 2.9" X 1.8" LONG
	120107-03-000	EA	FOAM - PLUG - SIDEWALL TUBE - 1.2" X 2.1" X 1.8" LONG
	120107-07-000	EA	FOAM - ROOF COVE
	152490-01-000	EA	FOAM - PLUG - ROOF TUBE
	108535-04-712	EA	FIBERGLASS SHEET - FLAT - 10" X 435" - BRIGHT WHITE
	148884-07-01A	EA	FIBERGLASS SHEET - 56.4" X 99.8" - HIGH GLOSS-BRIGHT WHITE
	148884-10-01A	EA	FIBERGLASS SHEET - 22.1" X 68.2" - HIGH GLOSS-BRIGHT WHITE
	148884-12-01A	EA	FIBERGLASS SHEET - 31.1" X 68.2" - HIGH GLOSS-BRIGHT WHITE
	148884-17-01A	EA	FIBERGLASS SHEET - 89.8" X 216.2" -HIGH GLOSS-BRIGHT WHITE
	148884-20-01A	EA	FIBERGLASS SHEET - 4" X 93.8" - HIGH GLOSS - BRIGHT WHITE
	148884-29-01A	EA	FIBERGLASS SHEET - 89.7" X 254.5" -HIGH GLOSS-BRIGHT WHITE

AWNINGS

CAMBRIA PATIO AWNINGS

FEATURE COLOR	MODEL	COLOR DESIGNATION	AWNING FABRIC	AWNING LENGTH	WEATHER WRAP(MANUAL)	PART # MANUAL	VENDOR
27G	723D	BURGUNDY ROSE (DZ)	VINYL	13'	MTL/BRT WHT	113874-04-34A	A&E
BURGUNDY &	726A	BURGUNDY ROSE (DZ)	VINYL	17'	MTL/BRT WHT	113874-14-34A	A&E
ALMOND	729H	BURGUNDY ROSE (DZ)	VINYL	19'	MTL/BRT WHT	153692-04-34A	
92K	723D	FAWN (EA)	VINYL	13'	MTL/BRT WHT	113874-04-29A	A&E
BEIGE &	726A	FAWN (EA)	VINYL	17'	MTL/BRT WHT	113874-14-29A	A&E
BRONZE	729H	FAWN (EA)	VINYL	19'	MTL/BRT WHT	153692-04-29A	
26F	723D	FAWN (EA)	VINYL	13'	MTL/BRT WHT	113874-04-29A	A&E
BRONZED	726A	FAWN (EA)	VINYL	17'	MTL/BRT WHT	113874-14-29A	A&E
GRAY	729H	FAWN (EA)	VINYL	19'	MTL/BRT WHT	153692-04-29A	
26H	723D	PEWTER (EH)	VINYL	13'	MTL/BRT WHT	113874-04-31A	A&E
DARK	726A	PEWTER (EH)	VINYL	17'	MTL/BRT WHT	113874-14-31A	A&E
PLUM	729H	PEWTER (EH)	VINYL	19'	MTL/BRT WHT	153692-04-31A	

KEY	PART NUMBER	U/M	DESCRIPTION
	127647-03-01A	EA	ROD/AWNING GUARD - ENTRY DOOR - 19.4" LONG
	127960-01-01A	EA	RETAINER - EYE - 3/8" - STAINLESS STEEL
	113874-12-01A	EA	SCREW/LAG - AWNING - 1/4" X 2 3/4" STAINLESS STEEL
	113874-15-02A	EA	HARDWARE KIT - AWNING - STRAIGHT/SHORT - BRIGHT WHITE
	153692-01-01A	EA	HARDWARE KIT - F/2 STEP (STANDARD) - BRIGHT WHITE - 729H
	137054-01-02A	EA	BRACKET - AWNING - BRIGHT WHITE
	146457-02-03A	EA	BRACKET - AWNING - BRIGHT WHITE - 729H

COPYRIGHT © 2006 WINNEBAGO INDUSTRIES INC.

EXTERIOR DOORS & COMPARTMENTS GROUP

DOOR & COMPARTMENT LAYOUT

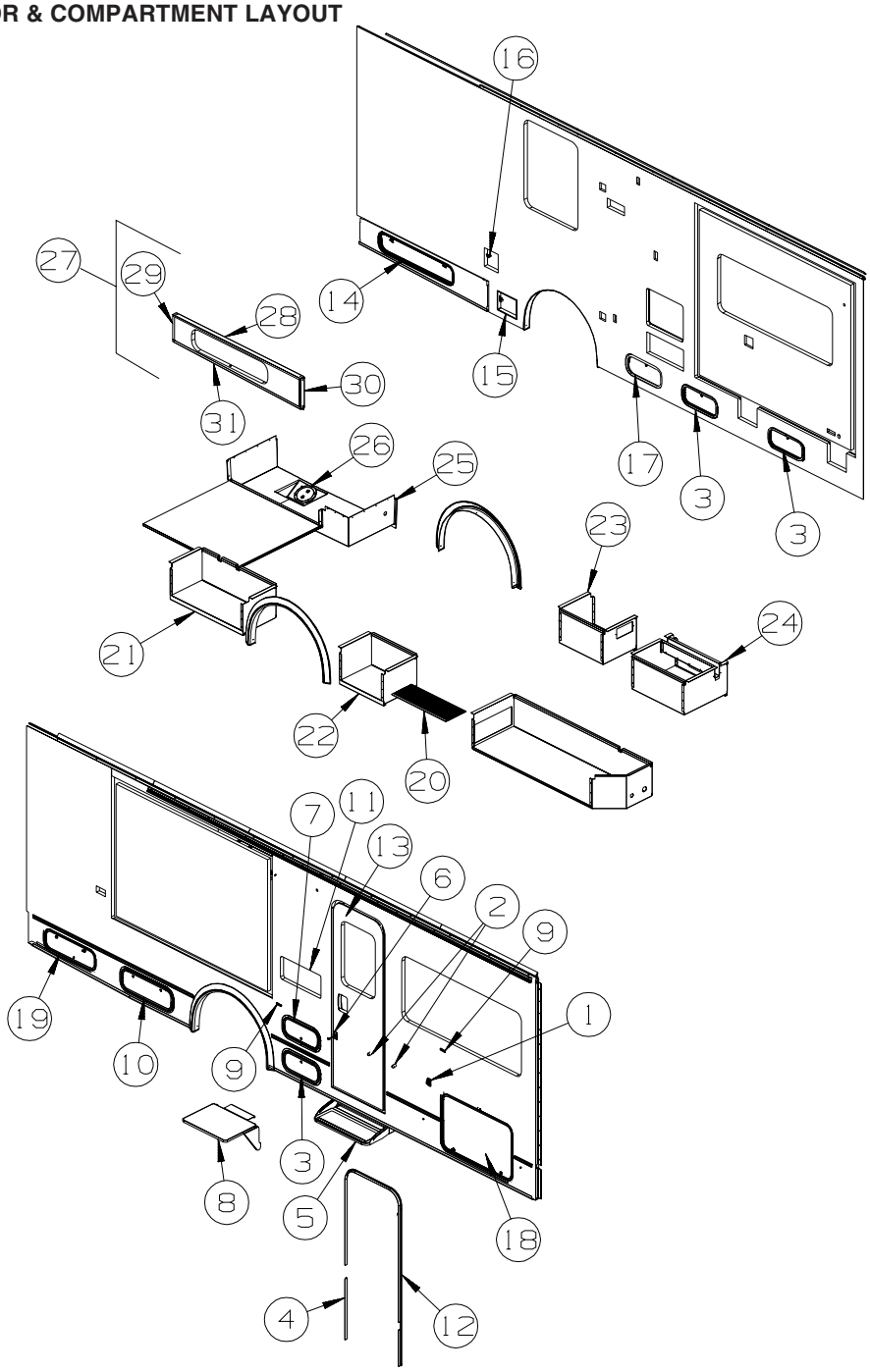

KEY	PART NUMBER	U/M	DESCRIPTION
1	104099-02-04A	EA	CATCH/RETAINER - DOOR HOLDER - BRIGHT WHITE
2	117046-02-000	EA	BUMPER - RUBBER/ROUND END - 1.5"
3	126945-01-J22	EA	DOOR/STORAGE - W/O HARDWARE - 18" X 8.3" - WHITE
3	126945-01-AA1	EA	DOOR/STORAGE - W/O HARDWARE - 18" X 8.3" - BLACK
4	139100-08-01A	EA	GARNISH/RADIUS - ENTRY DOOR - BRIGHT WHITE
5	139748-02-04B	EA	STEP/PULLOUT - W/BRACKETS - BLACK
	102569-04-000	EA	MAT - ANTI SLIP
5*	094708-03-01A	EA	STEP - ELEC - SINGLE - BLK CNTRL BOX - KWIKEE - ELECTRIC ENTRANCE STEP - NOT ILLUSTRATED FROM: 00-00-00 THRU: 08-07-05
5*	094708-05-01A	EA	STEP - ELECTRIC - SINGLE - BLACK - KWIKEE - ELECTRIC ENTRANCE STEP FROM: 08-08-05 THRU: 99-99-99
6	104099-03-04A	EA	CATCH - DOOR HOLDER - STRIKE - 6" - BRIGHT WHITE
7	126945-15-S34	EA	DOOR/STORAGE - W/O HARDWARE - 18" X 8.3"
8	142034-02-01A	EA	SHELF - F/EXTERIOR TV - BRIGHT WHITE
9	102768-01-000	EA	HOLDER - COMPARTMENT/ENTRY DOOR - METAL - MILL FINISH
10	126946-50-S34	EA	DOOR/STORAGE - W/O HARDWARE - 25.7" X 8.9"
10	126946-50-AA1	EA	DOOR/STORAGE - W/O HARDWARE - 25.7" X 8.9" - EXTERIOR GRAPHICS PACKAGE

COPYRIGHT © 2006 WINNEBAGO INDUSTRIES INC.

EXTERIOR DOORS & COMPARTMENTS GROUP (CONTINUED)

DOOR & COMPARTMENT LAYOUT (CONTINUED)

KEY	PART NUMBER	U/M	DESCRIPTION
11*	084103-08-000	EA	DOOR - VENT - REFRIGERATOR - W/O JAMB - BRIGHT WHITE
11	084104-08-000	EA	JAMB - VENT DOOR/REFRIGERATOR - BRIGHT WHITE
12	139101-02-01A	EA	GARNISH/STRAIGHT - 35.31" - W/O NOTCHES - BRIGHT WHITE
13	P32206-15-T47	EA	DOOR - ENTRY W/SCREEN DOOR - W/O WINDOW/LATCH (T47, T48)
13	P32206-15-S38	EA	DOOR - ENTRY W/SCREEN DOOR - W/O WINDOW/LATCH (T49, T50)
13	P32206-15-T41	EA	DOOR - ENTRY W/SCREEN DOOR - W/O WINDOW/LATCH (T51, T52)
	138292-01-000	EA	SEAL - LOCK CYLINDER
ENTRY DOOR LOCK CYLINDERS & KEYS			
	138287-11-000	EA	CYLINDER/LOCK - ENTRY DOOR - MASTER W/3M ICON - (3041)
	138287-12-000	EA	CYLINDER/LOCK - ENTRY DOOR - MASTER W/3M ICON - (3042)
	138287-13-000	EA	CYLINDER/LOCK - ENTRY DOOR - MASTER W/3M ICON - (3043)
	138287-14-000	EA	CYLINDER/LOCK - ENTRY DOOR - MASTER W/3M ICON - (3044)
	138287-15-000	EA	CYLINDER/LOCK - ENTRY DOOR - MASTER W/3M ICON - (3045)
	138287-16-000	EA	CYLINDER/LOCK - ENTRY DOOR - MASTER W/3M ICON - (3046)
	138287-17-000	EA	CYLINDER/LOCK - ENTRY DOOR - MASTER W/3M ICON - (3047)
	138287-18-000	EA	CYLINDER/LOCK - ENTRY DOOR - MASTER W/3M ICON - (3048)
	138287-19-000	EA	CYLINDER/LOCK - ENTRY DOOR - MASTER W/3M ICON - (3049)
	138287-20-000	EA	CYLINDER/LOCK - ENTRY DOOR - MASTER W/3M ICON - (3050)
	138288-11-000	EA	KEY - REVERSIBLE - #3041 - T/M 16169-02-3041
	138288-12-000	EA	KEY - REVERSIBLE - #3042 - T/M 16169-02-3042
	138288-13-000	EA	KEY - REVERSIBLE - #3043 - T/M 16169-02-3043
	138288-14-000	EA	KEY - REVERSIBLE - #3044 - T/M 16169-02-3044
	138288-15-000	EA	KEY - REVERSIBLE - #3045 - T/M 16169-02-3045
	138288-16-000	EA	KEY - REVERSIBLE - #3046 - T/M 16169-02-3046
	138288-17-000	EA	KEY - REVERSIBLE - #3047 - T/M 16169-02-3047
	138288-18-000	EA	KEY - REVERSIBLE - #3048 - T/M 16169-02-3048
	138288-19-000	EA	KEY - REVERSIBLE - #3049 - T/M 16169-02-3049
	138288-20-000	EA	KEY - REVERSIBLE - #3050 - T/M 16169-02-3050
14	126946-43-S34	EA	DOOR/STORAGE - W/O HARDWARE - 37.8" X 8.3" - WHITE
14	126946-43-AA1	EA	DOOR/STORAGE - W/O HARDWARE - 37.8" X 8.3" - BLACK
15	142894-01-01A	EA	DOOR/POWER CORD - W/HATCH - W/LOCK - BRIGHT WHITE
16	147587-01-01A	EA	DOOR - FUEL FILL
16	137169-02-01A	EA	ADAPTER/LOCK - (WASHER) F/GRAVITY WATERFILL
16	138637-03-000	EA	LOCK ASM. - KEYED - .9" CASE (CYLINDER/CAM/HDWR PKG)
	138637-62-000	EA	CAM - LATCHING - DOG LEG - 1" LONG
	138637-52-000	EA	CASE/CYLINDER - LOCKING W/O CAM/KEY - .9"
	138637-52-001	EA	CASE/CYLINDER - LOCKING W/O CAM/KEY - .9"
	138637-52-002	EA	CASE/CYLINDER - LOCKING W/O CAM/KEY - .9"
	138637-52-003	EA	CASE/CYLINDER - LOCKING W/O CAM/KEY - .9"
	138637-52-004	EA	CASE/CYLINDER - LOCKING W/O CAM/KEY - .9"
	138637-52-005	EA	CASE/CYLINDER - LOCKING W/O CAM/KEY - .9"
	138637-52-006	EA	CASE/CYLINDER - LOCKING W/O CAM/KEY - .9"
	138637-52-007	EA	CASE/CYLINDER - LOCKING W/O CAM/KEY - .9"
	138637-52-008	EA	CASE/CYLINDER - LOCKING W/O CAM/KEY - .9"
	138637-52-009	EA	CASE/CYLINDER - LOCKING W/O CAM/KEY - .9"
	144474-01-000	EA	ADAPTER - LOCK - 180 DEGREE
17	126945-02-R07	EA	DOOR/STORAGE - W/O HARDWARE - 18" X 8.3"
17	126945-02-AA1	EA	DOOR/STORAGE - W/O HARDWARE - 18" X 8.3" - BLACK
18	126946-73-T41	EA	DOOR/STORAGE - W/O HARDWARE - 35.5" X 23.1" - WHITE
18	126946-73-T42	EA	DOOR/STORAGE - W/O HARDWARE - 35.5" X 23.1" - BLACK
19	126946-48-S34	EA	DOOR/STORAGE - W/O HARDWARE - 25.6" X 8.5" - WHITE
19	126946-48-AA1	EA	DOOR/STORAGE - W/O HARDWARE - 25.6" X 8.5" - BLACK
19	076767-07-000	EA	CABLE - STAINLESS STEEL - 7.1"
20	133114-03-01A	EA	TREAD - STEP/RUBBER - 27.1" X 10.1" - TAUPE
21	137554-42-T41	EA	COMPARTMENT - LUGGAGE
22	137554-43-T41	EA	COMPARTMENT - LUGGAGE
23	137554-44-T41	EA	COMPARTMENT - LUGGAGE
24	137554-45-T41	EA	COMPARTMENT - LUGGAGE
25	149200-01-000	EA	COMPARTMENT - DRAINAGE
26	092887-02-000	EA	HATCH/PLATE - 7.4" FLANGE/6.5" R.O. - BLACK
	092887-01-000	EA	HATCH/PLATE - 8.2" FLANGE/6.5" R.O. - BLACK
27	155489-02-T47	EA	PANEL - REMOVABLE - W/O HDW (T47, T48)
27	155489-02-T43	EA	PANEL - REMOVABLE - W/O HDW (T49, T50)
27	155489-02-T41	EA	PANEL - REMOVABLE - W/O HDW (T51, T52)

COPYRIGHT © 2006 WINNEBAGO INDUSTRIES INC.

EXTERIOR DOORS & COMPARTMENTS GROUP (CONTINUED)

DOOR & COMPARTMENT LAYOUT (CONTINUED)

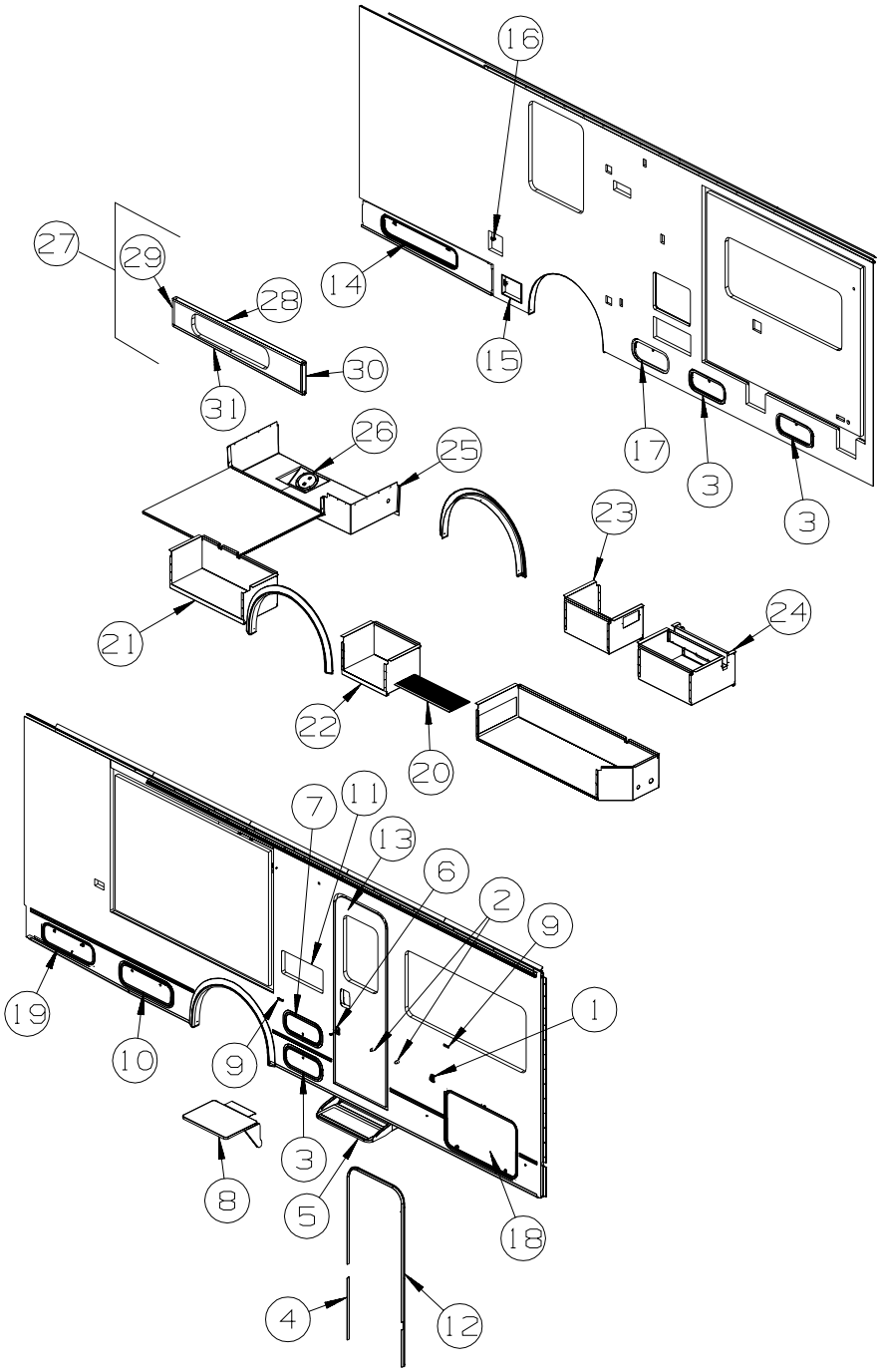

KEY	PART NUMBER	U/M	DESCRIPTION
28	148211-02-01A	EA	TRIM - SIDEWALL/LOWER - 75.7" - BRIGHT WHITE FROM: 00-00-00 THRU: 08-09-05 - NOT ILLUSTRATED
28	156963-02-01A	EA	TRIM - SIDEWALL - U CHANNEL - 64.1" - BRIGHT WHITE FROM: 08-10-05 THRU: 99-99-99
29	148709-02-01A	EA	TRIM - SIDEWALL - U CHANNEL - 1.8" X 11.1" - BRIGHT WHITE FROM: 00-00-00 THRU: 08-09-05 - NOT ILLUSTRATED
29	156995-02-01A	EA	TRIM - SIDEWALL - U CHANNEL - 1.8" X 11.1" - BRIGHT WHITE FROM: 08-10-05 THRU: 99-99-99
30	148709-01-01A	EA	TRIM - SIDEWALL - U CHANNEL - 1.8" X 12.6" - BRIGHT WHITE FROM: 00-00-00 THRU: 08-09-05 - NOT ILLUSTRATED
30	156995-01-01A	EA	TRIM - SIDEWALL - U CHANNEL - 1.8" X 12.6" FROM: 08-10-05 THRU: 99-99-99
31	148700-10-01A	EA	TRIM - SIDEWALL/BOTTOM - 75.4" - BRIGHT WHITE

COPYRIGHT © 2006 WINNEBAGO INDUSTRIES INC.

EXTERIOR DOORS & COMPARTMENTS GROUP (CONTINUED)

DOOR & COMPARTMENT LAYOUT (CONTINUED)

KEY	PART NUMBER	U/M	DESCRIPTION
VALANCE DOOR, WATER FILL DOOR, & FUEL FILL DOOR KEYS			
	138637-51-000	EA	KEYS - SET OF TWO
	138637-51-001	EA	KEYS - SET OF TWO
	138637-51-002	EA	KEYS - SET OF TWO
	138637-51-003	EA	KEYS - SET OF TWO
	138637-51-004	EA	KEYS - SET OF TWO
	138637-51-005	EA	KEYS - SET OF TWO
	138637-51-006	EA	KEYS - SET OF TWO
	138637-51-007	EA	KEYS - SET OF TWO
	138637-51-008	EA	KEYS - SET OF TWO
	138637-51-009	EA	KEYS - SET OF TWO

***COMPONENT PARTS LISTED LATER IN THIS GROUP**

COPYRIGHT © 2006 WINNEBAGO INDUSTRIES INC.

EXTERIOR DOORS & COMPARTMENTS GROUP (CONTINUED)

COMPONENT PARTS FOR DOOR & COMPARTMENT LAYOUT (CONTINUED)

084103-08-000

KEY	PART NUMBER	U/M	DESCRIPTION	VENDOR NO.
	084104-01-700	EA	LOCK-MALE, FASTENER	201-721-010
	084104-01-701	EA	LOCK-FEMALE, FASTENER	201-802-010

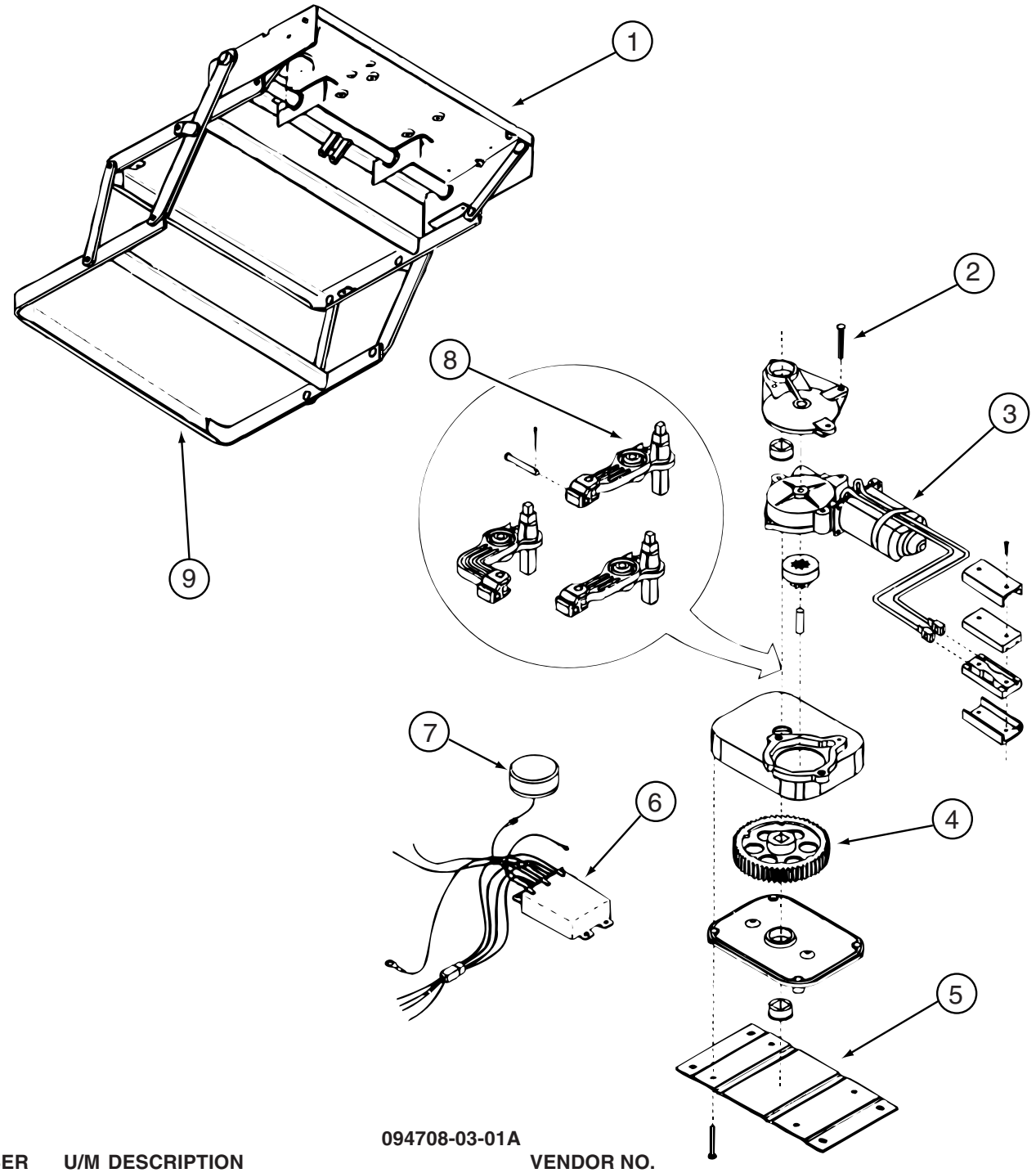

094708-03-01A

KEY	PART NUMBER	U/M	DESCRIPTION	VENDOR NO.
1	088746-01-709	EA	FRAME W/SGL STEP,2800 SERIES	908028
2	094707-02-703	EA	BEARING & PINS	909530
3	094707-02-700	EA	MOTOR ASM.,W/BEARINGS & PINS	909520
4	094707-02-702	EA	GEAR KIT(GEAR-BEARING-PINS)	909525
5	094707-02-704	EA	CONNECTOR-MOTOR ASM.W/PLATES	909537
6	094707-03-700	EA	KIT CONTROL/SWITCH-RETROFIT	909506005
7	088733-01-700	EA	BULB	9004
7	088746-01-705	EA	LIGHT-UNDER STEP	9004
8	094708-03-700	EA	LINKAGE ASSEMBLY-SERIES 28	909533
9	094707-02-707	EA	TREAD - NON-SKID - BLACK	909333
	094707-03-701	EA	PLUG - 4-WAY - PACKARD	909306

COPYRIGHT © 2006 WINNEBAGO INDUSTRIES INC.

EXTERIOR DOORS & COMPARTMENTS GROUP (CONTINUED)

COMPONENT PARTS FOR DOOR & COMPARTMENT LAYOUT (CONTINUED)

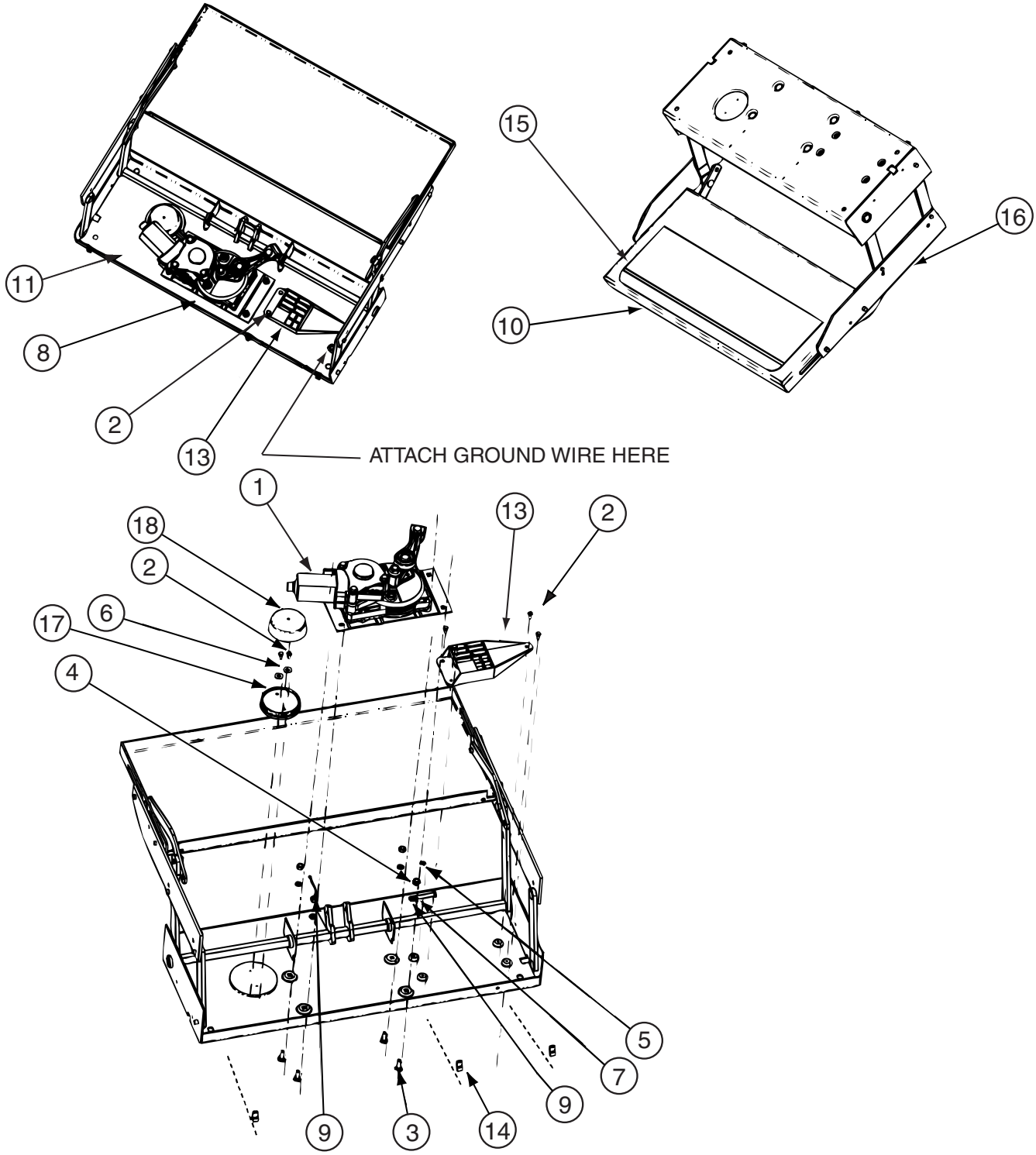

094708-05-01A

KEY	PART NUMBER	U/M	DESCRIPTION	VENDOR NO.
1	094707-04-701	EA	MOTOR “AM 214” F/IMGL STEPS	1101428
13	094707-04-700	EA	CONTROL UNIT W/OVERRIDE	909510000
15	143709-01-702	EA	TREAD/NON-SKID 6" X 21" BLK	1915260
16	094708-05-701	EA	FRAME W/SGL STEP,28 SERIES	3200120
17	088746-01-705	EA	LIGHT-UNDER STEP	9004
	094707-03-701	EA	PLUG - 4-WAY - PACKARD	909306
	094707-04-702	EA	COTTER PIN - W/CLEVIS PIN	905205000
	094707-04-711	EA	KWIKTEST - W/4-WAY PIGTAIL	909518000
	094708-05-700	EA	GEAR BOX W/LINKAGE-STRAIGHT	1101426

CONTACT WINNEBAGO PART SALES FOR UNLISTED COMPONENT(S)

COPYRIGHT © 2006 WINNEBAGO INDUSTRIES INC.

EXTERIOR DOORS & COMPARTMENTS GROUP (CONTINUED)

COMPARTMENT DOOR PIECE PARTS

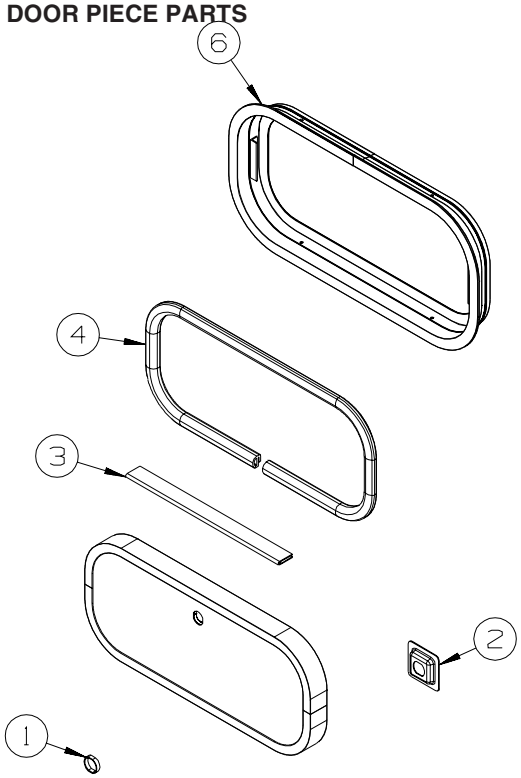

KEY	PART NUMBER	U/M	DESCRIPTION
1	139325-01-000	EA	SPACER - LOCK - 6MM - ENTERTAINMENT CENTER
	139337-01-000	EA	GASKET - LOCK - ENTERTAINMENT CENTER
1	144734-01-000	EA	SPACER - COMPARTMENT DOOR LOCK - 9/16" DEEP
2	097111-02-04A	EA	POCKET - LOCK - REAR DOOR - BLACK - ENTERTAINMENT CENTER
3	081801-V3-000	EA	HINGE - DOOR - PIANO - 2" X 96" - BRIGHT WHITE
3	081801-FN-000	EA	HINGE - DOOR - PIANO - 2" X 96" - BLACK
4	106850-02-000	FT	SEAL-E - SPONGE RUBBER - .43" X .75"
			FROM: 00-00-00 THRU: 07-31-05
4	156386-01-01A	FT	SEAL - BULB - W/ADHESIVE BACK
			FROM: 08-01-05 THRU: 99-99-99
5*	110506-27-000	EA	LOCK - TWIST - 1.6" - TWIST LOCK
	110506-55-000	EA	CASE/CYLINDER -TWIST -W/O CAM -1.25" -597312AA1 - TWIST LOCK
	110506-66-000	EA	CAM - LATCHING - DOG LEG - 1.5" LONG - TWIST LOCK
5	138290-02-000	EA	CASE - W/CAM - W/O CYLINDER/KEY - ENTERTAINMENT CENTER
5	138637-04-000	EA	LOCK ASM. - KEYED - 1.5" CASE (CYLINDER/CAM/HDWR PKG) - KEYED LOCK
	144474-01-000	EA	ADAPTER - LOCK - 180 DEGREE - KEYED LOCK
	138637-63-000	EA	CAM - LATCHING - DOG LEG - 1.5" LONG - KEYED LOCK
	138637-53-000	EA	CASE/CYLINDER - LOCKING - W/O CAM/KEY - 1.5"
	138637-53-001	EA	CASE/CYLINDER - LOCKING - W/O CAM/KEY - 1.5"
	138637-53-002	EA	CASE/CYLINDER - LOCKING - W/O CAM/KEY - 1.5"
	138637-53-003	EA	CASE/CYLINDER - LOCKING - W/O CAM/KEY - 1.5"
	138637-53-004	EA	CASE/CYLINDER - LOCKING - W/O CAM/KEY - 1.5"
	138637-53-005	EA	CASE/CYLINDER - LOCKING - W/O CAM/KEY - 1.5"
	138637-53-006	EA	CASE/CYLINDER - LOCKING - W/O CAM/KEY - 1.5"
	138637-53-007	EA	CASE/CYLINDER - LOCKING - W/O CAM/KEY - 1.5"
	138637-53-008	EA	CASE/CYLINDER - LOCKING - W/O CAM/KEY - 1.5"
	138637-53-009	EA	CASE/CYLINDER - LOCKING - W/O CAM/KEY - 1.5"
6	056795-01-000	FT	TAPE-SEAL, 1/8~ X 3/8~ WIDE - PRESS ON
			FROM: 09-26-05 THRU: 99-99-99

***COMPONENT PARTS LISTED LATER IN THIS GROUP**

COPYRIGHT © 2006 WINNEBAGO INDUSTRIES INC.

EXTERIOR DOORS & COMPARTMENTS GROUP (CONTINUED)

COMPARTMENT DOOR PIECE PARTS (CONTINUED)

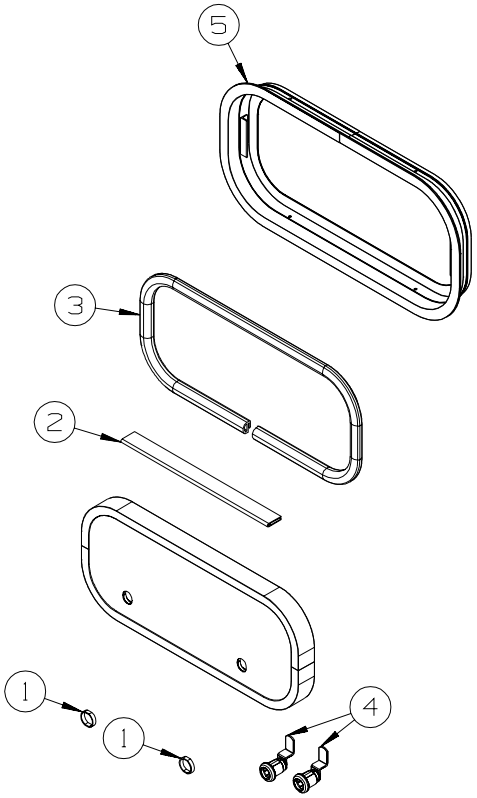

KEY	PART NUMBER	U/M	DESCRIPTION
1	144734-01-000	EA	SPACER - COMPARTMENT DOOR LOCK - 9/16" DEEP
2	081801-V3-000	EA	HINGE - DOOR - PIANO - 2" X 96" - BRIGHT WHITE
2	081801-FN-000	EA	HINGE - DOOR - PIANO - 2" X 96" - BLACK
3	106850-02-000	FT	SEAL-E - SPONGE RUBBER - .43" X .75"
			FROM: 00-00-00 THRU: 07-31-05
3	156386-01-01A	FT	SEAL - BULB - .4" X .5" - W/ADHESIVE BACK - NOT ILLUSTRATED
			FROM: 08-01-05 THRU: 99-99-99
4*	110506-27-000	EA	LOCK - TWIST - 1.6" - TWIST LOCK
	110506-55-000	EA	CASE/CYLINDER -TWIST -W/O CAM -1.25" -597312AA1 - TWIST LOCK
	110506-66-000	EA	CAM - LATCHING - DOG LEG - 1.5" LONG - TWIST LOCK
4	138637-04-000	EA	LOCK ASM. - KEYED - 1.5" CASE (CYLINDER/CAM/HDWR PKG) - KEYED LOCK
	144474-01-000	EA	ADAPTER - LOCK - 180 DEGREE - KEYED LOCK
	138637-63-000	EA	CAM - LATCHING - DOG LEG - 1.5" LONG - KEYED LOCK
	138637-53-000	EA	CASE/CYLINDER - LOCKING - W/O CAM/KEY - 1.5"
	138637-53-001	EA	CASE/CYLINDER - LOCKING - W/O CAM/KEY - 1.5"
	138637-53-002	EA	CASE/CYLINDER - LOCKING - W/O CAM/KEY - 1.5"
	138637-53-003	EA	CASE/CYLINDER - LOCKING - W/O CAM/KEY - 1.5"
	138637-53-004	EA	CASE/CYLINDER - LOCKING - W/O CAM/KEY - 1.5"
	138637-53-005	EA	CASE/CYLINDER - LOCKING - W/O CAM/KEY - 1.5"
	138637-53-006	EA	CASE/CYLINDER - LOCKING - W/O CAM/KEY - 1.5"
	138637-53-007	EA	CASE/CYLINDER - LOCKING - W/O CAM/KEY - 1.5"
	138637-53-008	EA	CASE/CYLINDER - LOCKING - W/O CAM/KEY - 1.5"
	138637-53-009	EA	CASE/CYLINDER - LOCKING - W/O CAM/KEY - 1.5"
5	056795-01-000	FT	TAPE-SEAL, 1/8~ X 3/8~ WIDE - PRESS ON
			FROM: 09-26-05 THRU: 99-99-99

***COMPONENT PARTS LISTED LATER IN THIS GROUP**

COMPONENT PARTS FOR COMPARTMENT DOOR PIECE PARTS

110506-A1-000, 110506-A2-000, 110506-26-000, 110506-27-000, 110506-36-000

KEY	PART NUMBER	U/M	DESCRIPTION	VENDOR NO.
	110506-40-700	EA	HDWE KIT	596950AAL

COPYRIGHT © 2006 WINNEBAGO INDUSTRIES INC.

EXTERIOR DOORS & COMPARTMENTS GROUP (CONTINUED)

ENTRY

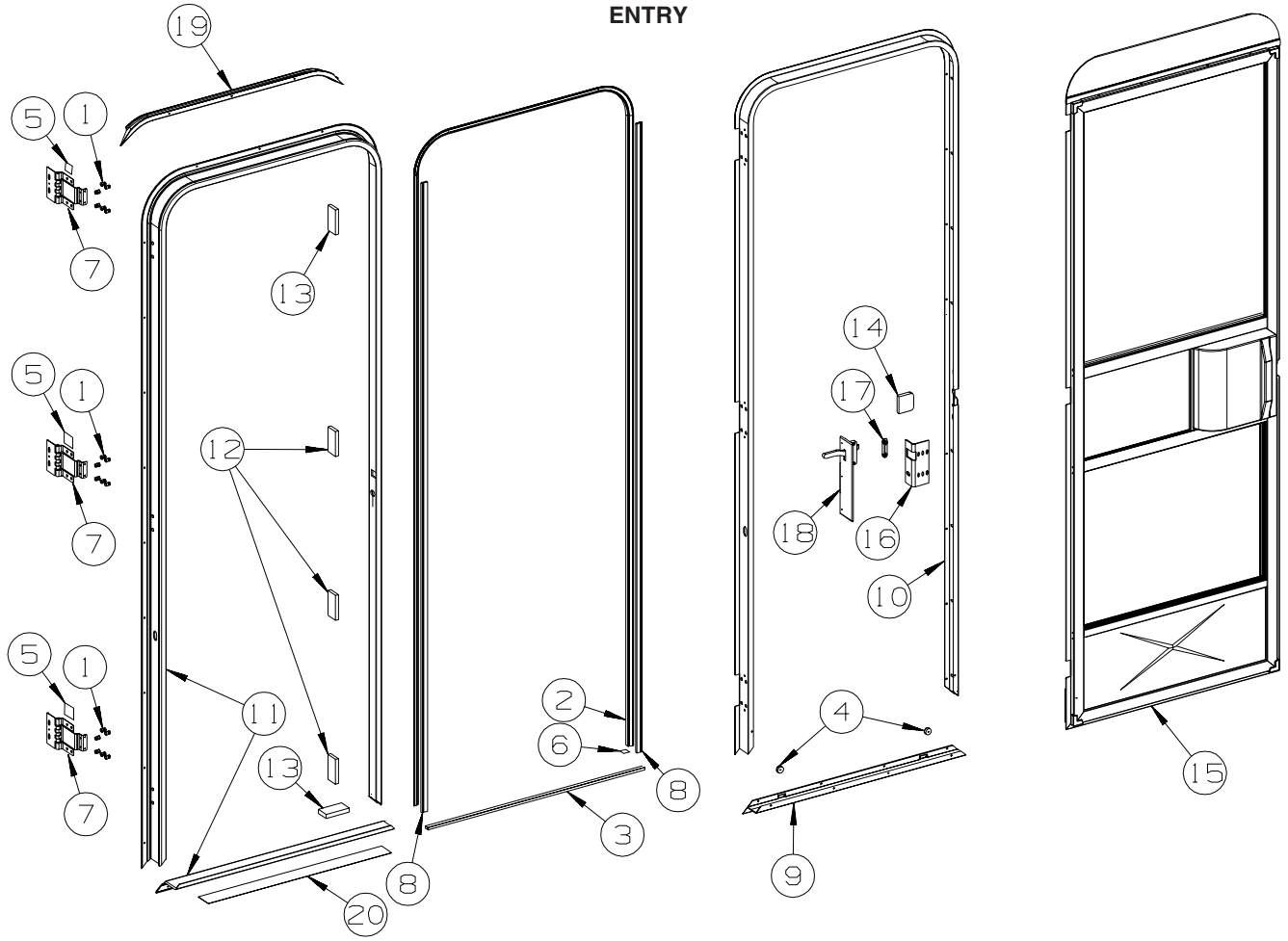

KEY	PART NUMBER	U/M	DESCRIPTION
1	039715-01-000	EA	NUT-SERT - 1/4" DIAMETER - 20 THREADS
2	075671-04-000	FT	SEAL - SPONGE - LAZY T - W/ADHESIVE STRIP - .5" WIDE
3	075673-05-000	FT	SEAL/PILE - .5" HIGH W/ADHESIVE BACK - BLACK
4	081914-02-000	EA	BUMPER - RUBBER - ROUND - 5/16" DIA. X 13/64" THICK
5	100128-02-000	FT	SEAL - FOAM/ADHESIVE BACK - .37" WIDE X .37" THICK X 60’
6	104692-01-000	FT	SEAL - ADHESIVE BACKED FOAM - 3/4" THICK X 3/4" WIDE X 25'
7	106719-01-05A	EA	HINGE - ENTRY DOOR - BRIGHT WHITE
8	118929-01-01A	FT	SEAL - PILE - PUSH ON
9	121893-01-01A	EA	FRAME - ENTRY DOOR/BOTTOM - BRIGHT WHITE
10	121894-31-01A	EA	FRAME - ENTRY DOOR - BRIGHT WHITE
11	121898-21-01A	EA	JAMB - DOOR/ENTRANCE - BRIGHT WHITE
12	125724-01-000	EA	SHIM - DOOR, ENTRANCE
13	125724-02-000	EA	SHIM - DOOR, ENTRANCE
14	130096-05-000	EA	FOAM - SCREEN DOOR, RETAINER
15	P32208-06-S34	EA	DOOR - SCREEN - W/O HARDWARE
16	137401-01-03B	EA	BRACKET - DOOR ANGLE - OFF WHITE
17	148364-01-12B	EA	STRIKE - SCREEN DOOR - BRIGHT WHITE
18	132915-01-01A	EA	LATCH - SCREEN DOOR - BLACK
19	139054-01-01A	EA	CAP - DRIP - JAMB MOUNTED - BRIGHT WHITE
20	038327-01-000	EA	TAPE - ANTI-SLIP - 2" X 60'

COPYRIGHT © 2006 WINNEBAGO INDUSTRIES INC.

EXTERIOR DOORS & COMPARTMENTS GROUP (CONTINUED)

SCREEN

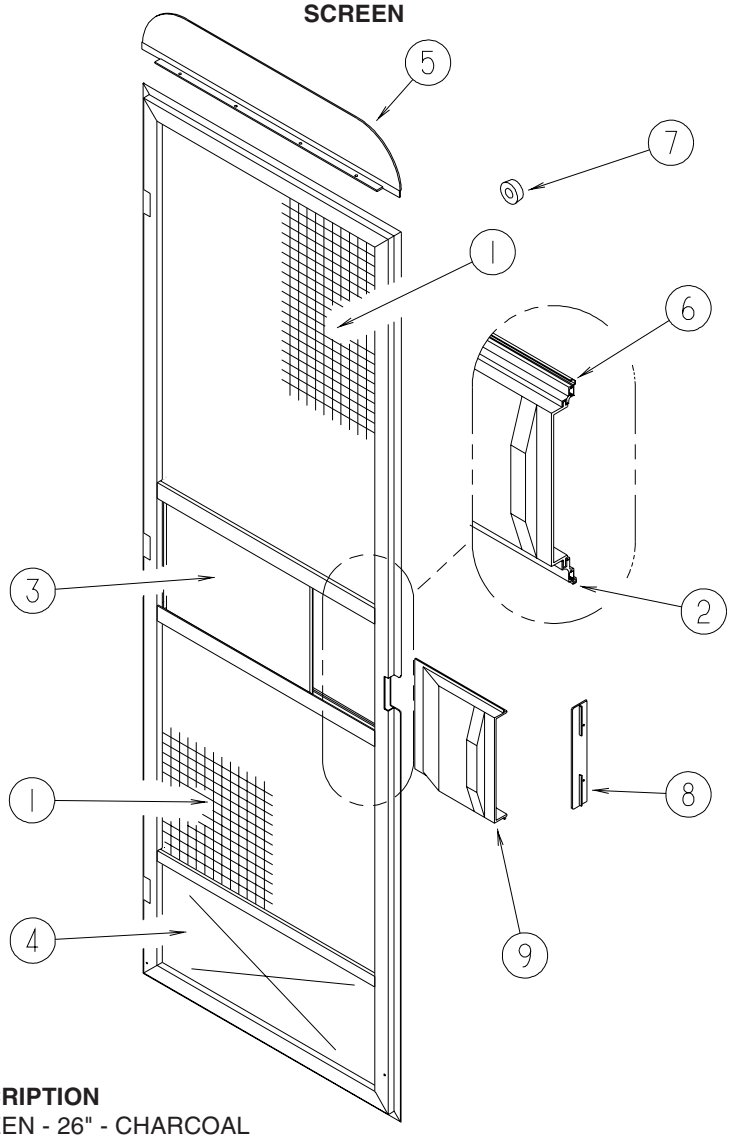

KEY	PART NUMBER	U/M	DESCRIPTION
1	002293-02-000	SF	SCREEN - 26" - CHARCOAL
2	002294-01-000	FT	SPLINE - SCREENING - .13" X .14"
3	016454-21-000	EA	INSERT/CENTER - SCREEN DOOR
4	078552-03-000	EA	KICK PANEL - SCREEN DOOR - LOWER INSERT - UNPAINTED
5	078595-01-000	EA	TOP PLATE - SCREEN DOOR - CURVED TOP - 4.7" X 25.35"
6	078777-08-000	FT	CHANNEL - SLIDER - 4 FOOT INCREMENTS
7	120863-09-000	EA	BUMPER - RUBBER/RADIUS TOP - 3/4" X 3/8" - LT GRAY
8	132081-01-01A	EA	STRIKE - SLIDER - SCREEN DOOR - BRIGHT WHITE
9	132082-01-01A	EA	SLIDER - SCREEN DOOR - BRIGHT WHITE

COPYRIGHT © 2006 WINNEBAGO INDUSTRIES INC.

EXTERIOR DOORS & COMPARTMENTS GROUP (CONTINUED)

LATCH - ENTRY

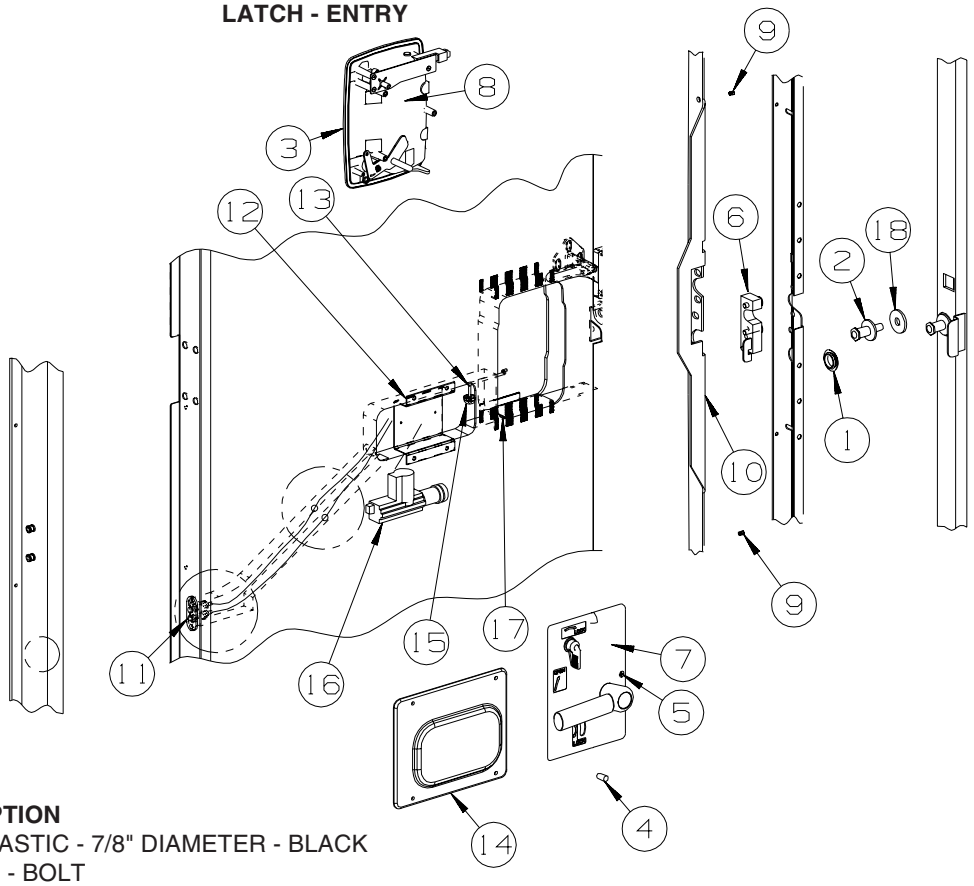

KEY	PART NUMBER	U/M	DESCRIPTION
1	061420-14-000	EA	PLUG/PLASTIC - 7/8" DIAMETER - BLACK
2	092927-20-000	EA	STRIKER - BOLT
3	112782-04-01A	EA	GASKET
4	112782-05-01A	EA	CAP - VINYL - RED
5	112782-08-01A	EA	SCREW - MOUNTING/PLATE - ZINC
6	112782-22-01A	EA	LATCH - SINGLE ROTOR
7	112782-21-01A	EA	LATCH - INTERIOR PLATE FROM: 00-00-00 THRU: 04-30-06
7	112782-27-01A	EA	LATCH - INTERIOR PLATE - BRIGHT WHITE - NOT ILLUSTRATED FROM: 05-01-06 THRU: 99-99-99
8	112782-20-01A	EA	LATCH - EXTERIOR - W/O LOCK CYLINDER W/ICON-REVERSIBLE KEY
9	072893-04-000	EA	NUTSERT - 10-32
10	132207-01-02B	EA	STIFFENER/DOOR - FORMED - E-COATED - OUTLOOK, MINNIE WINNIE, SPIRIT, SUNDANCER
10	132207-03-02B	EA	STIFFENER/DOOR - FORMED - E-COATED - VIEW, ASPECT, NAVION, CAMBRIA
11	138897-01-000	EA	SWITCH - 2 PIN/SPRING LOADED CONTACTS (EA=1 SWITCH)
12	113650-02-02B	EA	BRACKET - ACTUATOR - ELECTRIC - E-COATED
13	113651-01-01A	EA	ROD - CONTROL - MOTOR/LOCK
14	113960-01-01A	EA	COVER - ACTUATOR - POWER LOCK
15	114209-01-01A	EA	PUSHNUT - CAP - 1/8” - WHITE
16	138898-01-000	EA	ACTUATOR/LOCK - ELECTRIC
17	137230-01-01A	EA	SPACER- NOTCHED, MILL
18	147900-01-01A	EA	SPACER-STRIKE BOLT,MILL

COPYRIGHT © 2006 WINNEBAGO INDUSTRIES INC.

EXTERIOR SLIDEOUT GROUP

FRONT LEFT

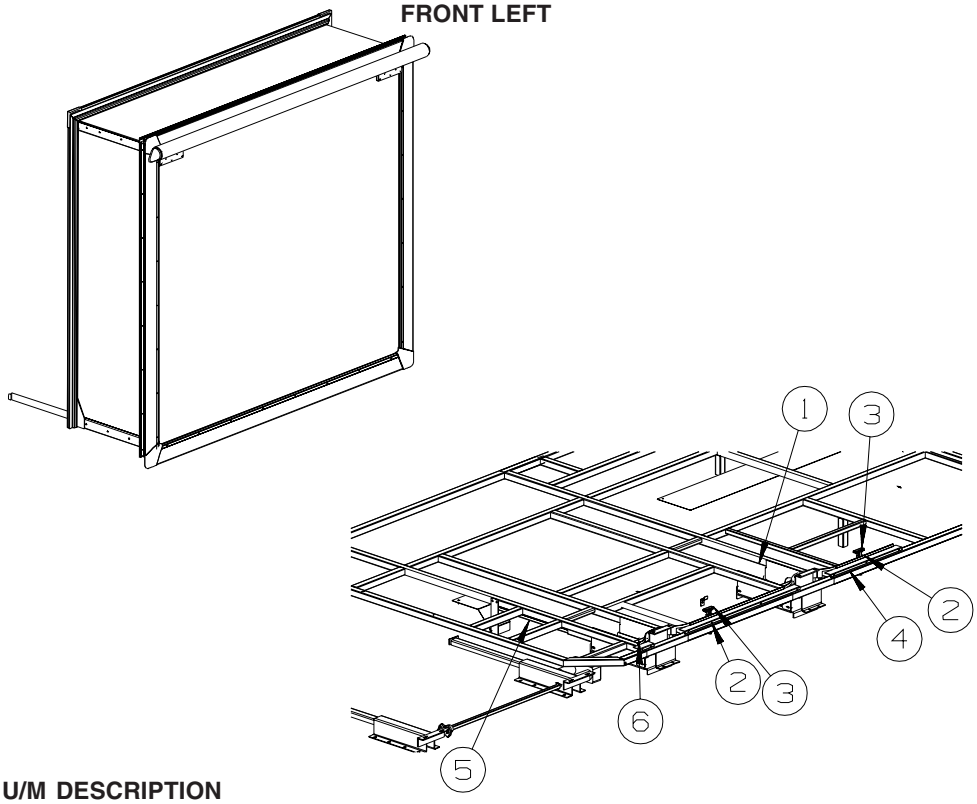

KEY	PART NUMBER	U/M	DESCRIPTION
1*	148685-01-000	EA	SLIDEOUT - ELECTRIC
2	126313-09-02B	EA	SUPPORT - ROLLER - SLIDE-OUT ROOM - E-COATED
3	134855-01-000	EA	BEARING PAD - NARROW
4	140282-05-T41	EA	TRIM - SIDEWALL - 80.5" - BRIGHT WHITE
5	141019-02-02B	EA	SUPPORT - WIRE - E-COATED
6	123012-04-000	FT	SEAL - SLIDEOUT - .09"/.13" THICK X 1.5" - W/ADHESIVE
	136995-10-02B	EA	PLATE W/BOLTS - 6.7" X 1.8" W/7/16" X 3" BOLTS

FROM: 00-00-00 THRU: 12-11-05

***COMPONENT PARTS LISTED LATER IN THIS GROUP**

COPYRIGHT © 2006 WINNEBAGO INDUSTRIES INC.

EXTERIOR SLIDEOUT GROUP (CONTINUED)

FRONT LEFT (CONTINUED)

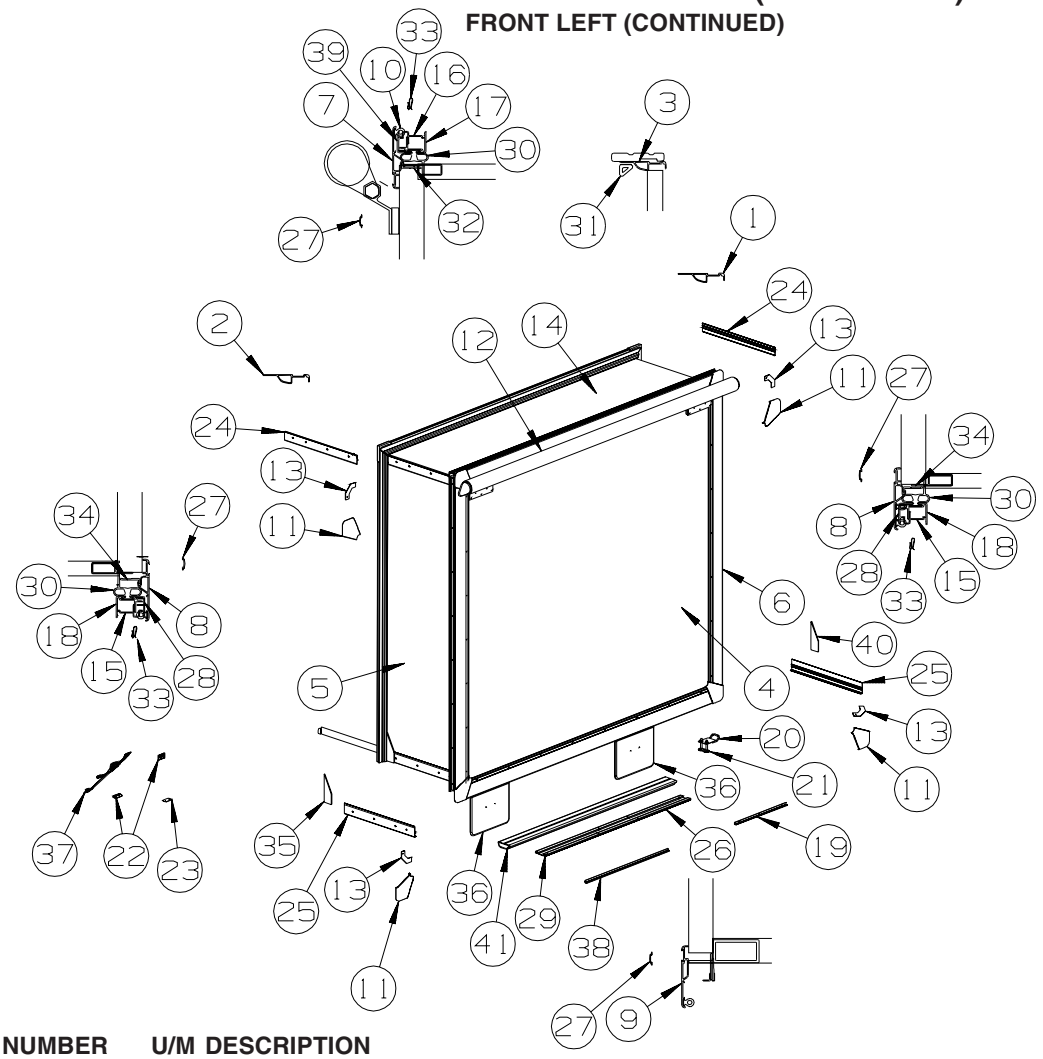

KEY	PART NUMBER	U/M	DESCRIPTION
1	139624-14-02A	EA	TRIM/SEAL - INNER/LEFT HAND - 70.2" - ALMOND
2	139624-13-02A	EA	TRIM/SEAL - INNER/RIGHT HAND - 70.2" - ALMOND
3	139624-04-02A	EA	TRIM/SEAL - INNER/TOP - 80.2" - ALMOND
4	155024-11-T47	EA	SLUG - F/SLIDEOUT (T47, T48)
4	155024-11-T43	EA	SLUG - F/SLIDEOUT (T49, T50)
4	155024-11-T41	EA	SLUG - F/SLIDEOUT (T51, T52)
5	155789-01-T47	EA	PANEL END - F/SLIDEOUT (T47, T48)
5	155789-01-T43	EA	PANEL END - F/SLIDEOUT (T49, T50)
5	155789-01-T41	EA	PANEL END - F/SLIDEOUT (T51, T52)
6	155790-01-T47	EA	PANEL END - F/SLIDEOUT (T47, T48)
6	155790-01-T43	EA	PANEL END - F/SLIDEOUT (T49, T50)
6	155790-01-T41	EA	PANEL END - F/SLIDEOUT (T51, T52)
7	139625-03-01A	EA	TRIM/SEAL - W/MITERED ENDS - 82" - BRIGHT WHITE - NOT ILLUSTRATED FROM: 00-00-00 THRU: 01-08-06
7	156417-01-01A	EA	TRIM/SEAL - W/MITERED ENDS - 76.5" - BRIGHT WHITE FROM: 01-09-06 THRU: 99-99-99
8	139625-14-01A	EA	TRIM/SEAL - W/MITERED ENDS - 73.8" - BRIGHT WHITE - NOT ILLUSTRATED FROM: 00-00-00 THRU: 01-08-06
8	156417-11-01A	EA	TRIM/SEAL - W/MITERED ENDS - 70.2" - BRIGHT WHITE FROM: 01-09-06 THRU: 99-99-99
9	142233-04-01A	EA	TRIM/SEAL - W/MITERED ENDS - 82" - BRIGHT WHITE - NOT ILLUSTRATED FROM: 00-00-00 THRU: 01-08-06
9	142233-20-01A	EA	TRIM/SEAL - W/MITERED ENDS - 78.4" - BRIGHT WHITE FROM: 01-09-06 THRU: 99-99-99
10	099418-01-000	FT	SEAL - D-SECTION/ADHESIVE BACK - .44" X .44" - BLK RUBBER - NOT ILLUSTRATED FROM: 00-00-00 THRU: 02-19-06
10	158297-01-000	FT	SEAL - D-SECTION/BULB/TEE - ADHESIVE BACK - BLACK FROM: 02-20-06 THRU: 99-99-99

COPYRIGHT © 2006 WINNEBAGO INDUSTRIES INC.

EXTERIOR SLIDEOUT GROUP (CONTINUED)

FRONT LEFT (CONTINUED)

KEY	PART NUMBER	U/M	DESCRIPTION
11	135275-01-01A	EA	PROTECTOR - CORNER - SLIDEOUT - WHITE - NOT ILLUSTRATED
			FROM: 00-00-00 THRU: 01-08-06
11	156151-01-02A	EA	PROTECTOR - CORNER - SLIDEOUT - BRIGHT WHITE
			FROM: 01-09-06 THRU: 99-99-99
12	122977-12-03A	EA	AWNING/SLIDEOUT W/COVER - 81.8" - WHITE - VINYL/VINYL WRAP
13	116444-04-12B	EA	TRIM/KEY CORNER - SLIDEOUT - 3.1" X 3.1" - BRIGHT WHITE - NOT ILLUSTRATED
			FROM: 00-00-00 THRU: 01-08-06
13	156416-01-12B	EA	BRACKET - CORNER TRIM/SLIDEOUT - 3.1"X 3.1" - BRIGHT WHITE
			FROM: 01-09-06 THRU: 99-99-99
14	148411-01-S34	EA	ROOF - F/SLIDEOUT
15	142718-31-01A	EA	RETAINER - SIDEWALL/SLIDEOUT - 69.7"
16	142718-23-01A	EA	RETAINER - SIDEWALL/SLIDEOUT - 79.9"
17	142719-08-02A	EA	TRIM/SIDEWALL - TOP/SLIDEOUT - 81.4" - ALMOND - NOT ILLUSTRATED
			FROM: 00-00-00 THRU: 01-08-06
17	151761-18-02A	EA	TRIM - SIDEWALL/SLIDEOUT/TOP - 81.4" - ALMOND
			FROM: 01-09-06 THRU: 99-99-99
18	142720-15-02A	EA	TRIM - SIDEWALL/SLIDEOUT - 70.2" - ALMOND - NOT ILLUSTRATED
			FROM: 00-00-00 THRU: 01-08-06
18	151760-20-02A	EA	TRIM - SIDEWALL/SLIDEOUT - 70.5" - ALMOND
			FROM: 01-09-06 THRU: 99-99-99
19	149821-18-01A	EA	TRIM/ANGLE - SIDEWALL - BLACK - 1/2" X 1/2" X 15.7"
20	150697-03-02B	EA	BRACKET - RESTRAINT/CHILD - E-COATED
21	150700-01-02B	EA	PLATE/MOUNTING - RESTRAINT/CHILD - 1" X 2.3" - E-COATED
22	135619-02-01A	EA	PLATE - TIEDOWN - SLIDEOUT ROOM
23	135622-01-02B	EA	PLATE - TIEDOWN - SLIDEOUT ROOM
24	138659-01-01A	EA	TRIM/FEATURE STRIP - 181.7" - BRIGHT WHITE - NOT ILLUSTRATED
			FROM: 00-00-00 THRU: 01-08-06
24	158375-03-01A	EA	TRIM - FEATURE STRIP - 20.6" - BRIGHT WHITE
			FROM: 01-09-06 THRU: 99-99-99
25	125051-01-01A	EA	TRIM - FEATURE STRIP/LOWER - 20.2" - BRIGHT WHITE - NOT ILLUSTRATED
			FROM: 00-000-00 THRU: 01-08-06
	075673-05-000	FT	SEAL - PILE - ADHESIVE BACK - BLACK
			FROM: 00-00-00 THRU: 01-08-06
25	158030-01-01A	EA	TRIM - FEATURE STRIP/LOWER - 2.3" X 20" - BRIGHT WHITE
			FROM: 01-09-06 THRU: 99-99-99
26	115325-07-01A	EA	RAIL - FLOOR/SLIDEOUT ROOM - 44.4" LONG - BLACK
27	105312-01-07A	FT	INSERT - FEATURE STRIP - VINYL - BRIGHT WHITE
28	136824-43-01A	EA	TRIM - SIDEWALL/SLIDEOUT - 70" - BRIGHT WHITE
29	115661-01-000	FT	SHOE/GLIDE - SLIDEOUT ROOM - 1/16" X 3" - POLYETHYLENE
30	136978-01-01A	FT	SEAL - SLIDEOUT - SINGLE WIPE LIP - BLACK
31	146056-01-000	FT	SEAL - TRIANGLE - W/PSA
32	133954-57-01A	EA	TRIM/SEAL - 76.1" - BRIGHT WHITE - NOT ILLUSTRATED
			FROM: 00-00-00 THRU: 01-08-06
32	133954-12-01A	EA	TRIM/SEAL - 75.7" - BRIGHT WHITE
			FROM: 01-09-06 THRU: 99-99-99
33	142549-01-000	EA	CLIP - “S” TYPE
34	133954-47-01A	EA	TRIM/SEAL - 66.4" - BRIGHT WHITE
35	157809-02-01A	EA	SEAL - FOAM BLOCK/LEFT SIDE - ADHESIVE BACK
			FROM: 01-09-06 THRU: 99-99-99
36	138077-07-01A	EA	COVER/RAM - 11" X 8.8" - W/O TUBE - BRIGHT WHITE
37	135619-01-01A	EA	STRAP - TIEDOWN - SLIDEOUT ROOM
38	149821-16-01A	EA	TRIM/ANGLE - SIDEWALL - BLACK - 1/2" X 1/2" X 27"
39	136824-02-01A	EA	TRIM - SIDEWALL/SLIDEOUT - 81.2" - BRIGHT WHITE
40	157809-01-01A	EA	SEAL - FOAM BLOCK/RIGHT SIDE - ADHESIVE BACK
			FROM: 01-09-06 THRU: 99-99-99
41	134756-02-T41	EA	RAMP - FABRIC COVERED - F/SLIDEOUT - 51.2" (T41, T42)
41	134756-02-T43	EA	RAMP - FABRIC COVERED - F/SLIDEOUT - 51.2" (T43, T44)
41	134756-02-T45	EA	RAMP - FABRIC COVERED - F/SLIDEOUT - 51.2" (T45, T46)

COPYRIGHT © 2006 WINNEBAGO INDUSTRIES INC.

EXTERIOR SLIDEOUT GROUP (CONTINUED)

FRONT LEFT (CONTINUED)

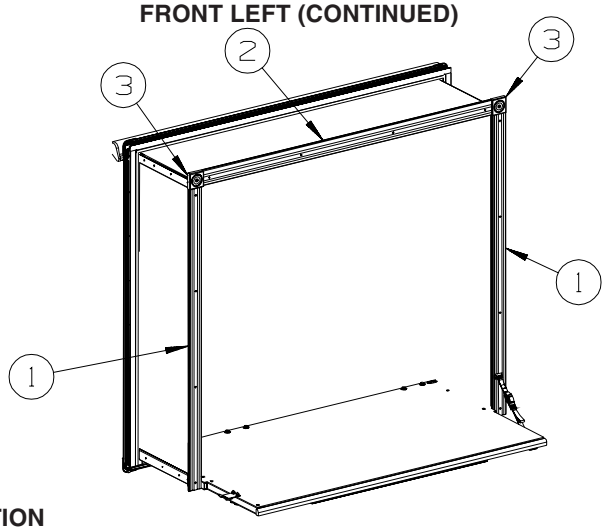

KEY	PART NUMBER	U/M	DESCRIPTION
1	132663-20-21A	EA	MOLDING-VINYL WRAP/PRE DRILLED-.6"X3"X67.1" - WASHED MAPLE,
1	132663-20-22A	EA	MOLDING-VINYL WRAP/PRE DRILLED-.6"X3"X67.1" - SIERRA MAPLE
2	132663-18-21A	EA	MOLDING-VINYL WRAP/PRE DRILLED-.6"X 3.4"X 73.1"-WASHED MPL
2	132663-18-22A	EA	MOLDING-VINYL WRAP/PRE DRILLED-.6"X 3.4"X 73.1"-SIERRA MPL
3	132844-02-21A	EA	BLOCK - CORNER - 3.5" X 3.5" - WASHED MAPLE
3	132844-02-22A	EA	BLOCK - CORNER - 3.5" X 3.5" - SIERRA MAPLE

COMPONENT PARTS FOR FRONT LEFT

148685-01-000

KEY	PART NUMBER	U/M	DESCRIPTION	VENDOR NO.
	148685-01-700	EA	MOTOR - 12 VOLT	28408
	148685-01-701	EA	BUSHING - 3/16" ID	80501
	148685-01-702	EA	HOLDING BRAKE	28662
	148685-01-703	EA	BEARING - F/TRANSFER GEAR	14691
	148685-01-704	EA	GEAR & SHAFT ASM.	26191
	148685-01-705	EA	TRANSFER GEAR	28564
	148685-01-706	EA	IDLER SHAFT ASM.	26209
	148685-01-707	EA	THRUST WASHER	14459
	148685-01-708	EA	GASKET - CASE	28995
	148685-01-709	EA	BEARING - FLANGE TYPE	645-0035
	148685-01-710	EA	BEARING - FLANGE TYPE	10055
	148685-01-711	EA	ADAPTER - MOTOR TO GEAR	28669
	148685-01-712	EA	BEARING - FLANGE TYPE	14458
	148685-01-713	EA	GASKET - MOTOR TO COVER	25596
	148685-01-714	EA	POWERHEAD ASM. W/MOTOR	29002

COPYRIGHT © 2006 WINNEBAGO INDUSTRIES INC.

EXTERIOR SLIDEOUT GROUP (CONTINUED)

REAR

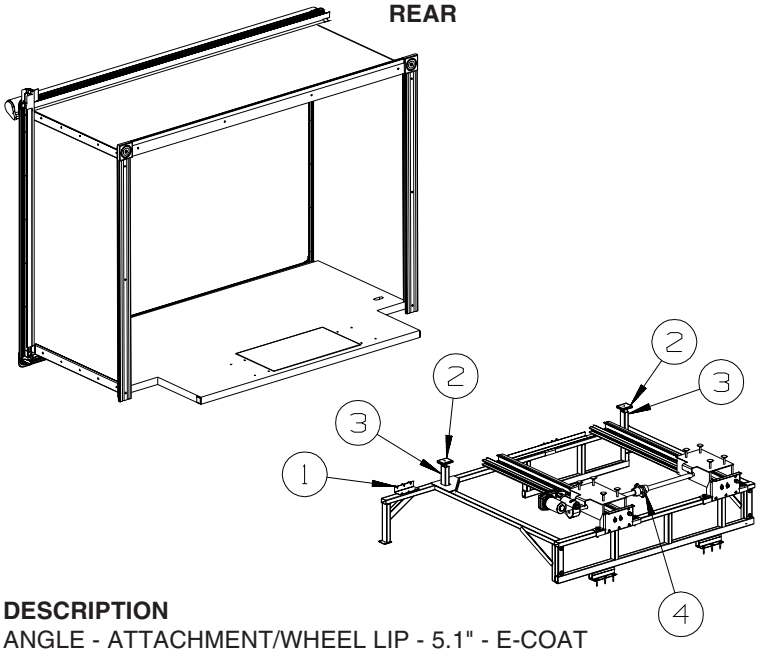

KEY	PART NUMBER	U/M	DESCRIPTION
1	113904-16-02B	EA	ANGLE - ATTACHMENT/WHEEL LIP - 5.1" - E-COAT
2	128599-03-000	EA	PAD - F/SLIDEOUT - 2" X 2.6"
3	126313-14-02B	EA	SUPPORT - SLIDE - F/SLIDE-OUT ROOM - E-COATED
4	150661-02-000	EA	SLIDEOUT - ELECTRIC/SLIM

COPYRIGHT © 2006 WINNEBAGO INDUSTRIES INC.

EXTERIOR SLIDEOUT GROUP (CONTINUED)

REAR (CONTINUED)

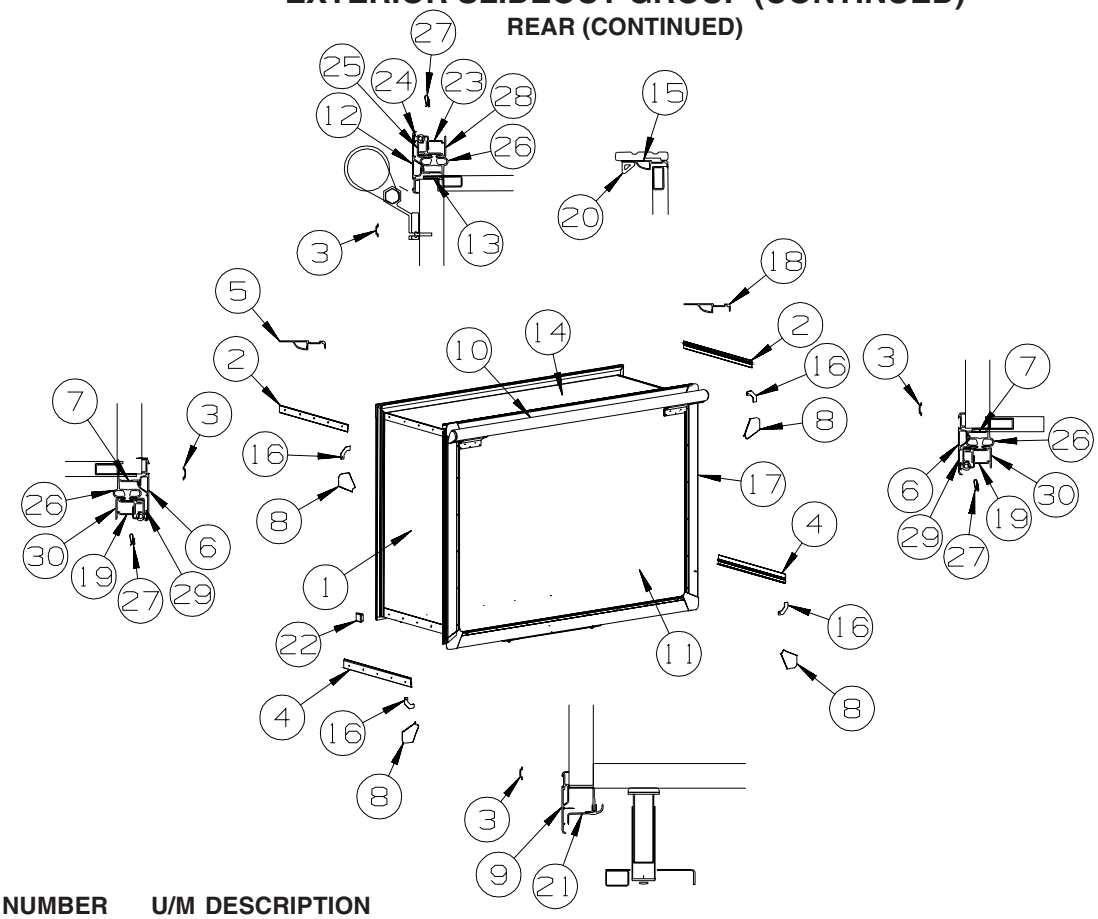

KEY	PART NUMBER	U/M	DESCRIPTION
1	155998-01-T47	EA	PANEL END - F/SLIDEOUT (T47, T48)
1	155998-01-T43	EA	PANEL END - F/SLIDEOUT (T49, T50)
1	155998-01-T41	EA	PANEL END - F/SLIDEOUT (T51, T52)
2	138659-01-01A	EA	TRIM/FEATURE STRIP - 181.7" - BRIGHT WHITE
3	105312-01-07A	FT	INSERT - FEATURE STRIP - VINYL - BRIGHT WHITE
4	125051-03-01A	EA	TRIM - FEATURE STRIP/LOWER - 29.3" - BRIGHT WHITE - NOT ILLUSTRATED
			FROM: 00-00-00 THRU: 01-08-06
	075673-01-000	FT	SEAL/PILE - .5" HIGH - ADHESIVE BACK - GRAY
			FROM: 00-00-00 THRU: 01-08-06
4	158030-02-01A	EA	TRIM - FEATURE STRIP/LOWER - 2.3" X 29.1" - BRIGHT WHIT
			FROM: 01-09-06 THRU: 99-99-99
5	139624-55-02A	EA	TRIM/SEAL - INNER - 57" - ALMOND
6	139625-60-01A	EA	TRIM/SEAL - W/MITERED ENDS - 60.1" - BRIGHT WHITE - NOT ILLUSTRATED
			FROM: 00-00-00 THRU: 01-08-06
6	156417-39-01A	EA	TRIM/SEAL - W/MITERED ENDS - 56.6" - BRIGHT WHITE
			FROM: 01-09-06 THRU: 99-99-99
7	133954-67-01A	EA	TRIM/SEAL - 52.4" - BRIGHT WHITE
8	135275-01-01A	EA	PROTECTOR - CORNER - SLIDEOUT - WHITE - NOT ILLUSTRATED
			FROM: 00-00-00 THRU: 01-08-06
8	156151-01-02A	EA	PROTECTOR - CORNER - SLIDEOUT - BRIGHT WHITE
			FROM: 01-09-06 THRU: 99-99-99
9	142233-04-01A	EA	TRIM/SEAL - W/MITERED ENDS - 82" - BRIGHT WHITE - NOT ILLUSTRATED
			FROM: 00-00-00 THRU: 01-08-06
9	142233-20-01A	EA	TRIM/SEAL - W/MITERED ENDS - 78.4" - BRIGHT WHITE
			FROM: 01-09-06 THRU: 99-99-99
10	122977-12-03A	EA	AWNING/SLIDEOUT W/COVER - 81.8" - VINYL WRAP/WHITE
11	155023-11-T47	EA	SLUG - F/SLIDEOUT (T47, T48)
11	155023-11-T43	EA	SLUG - F/SLIDEOUT (T49, T50)
11	155023-11-T41	EA	SLUG - F/SLIDEOUT (T51, T52)
12	139625-03-01A	EA	TRIM/SEAL - W/MITERED ENDS - 82" - BRIGHT WHITE - NOT ILLUSTRATED
			FROM: 00-00-00 THRU: 02-08-06
12	156417-01-01A	EA	TRIM/SEAL - W/MITERED ENDS - 76.5" - BRIGHT WHITE
			FROM: 02-09-06 THRU: 99-99-99

COPYRIGHT © 2006 WINNEBAGO INDUSTRIES INC.

EXTERIOR SLIDEOUT GROUP (CONTINUED)

REAR (CONTINUED)

KEY	PART NUMBER	U/M	DESCRIPTION
13	133954-57-01A	EA	TRIM/SEAL - 76.1" - BRIGHT WHITE - NOT ILLUSTRATED
			FROM: 00-00-00 THRU: 02-08-06
13	133954-12-01A	EA	TRIM/SEAL - 75.7" - BRIGHT WHITE
			FROM: 02-09-06 THRU: 99-99-99
14	149731-03-T41	EA	ROOF - F/SLIDEOUT
15	139624-04-01A	EA	TRIM/SEAL - INNER/TOP - 80.2" - BRIGHT WHITE
16	116444-04-12B	EA	TRIM/KEY CORNER - SLIDEOUT - 3.1" X 3.1" - BRIGHT WHITE - NOT ILLUSTRATED
			FROM: 00-00-00 THRU: 02-08-06
16	156416-01-12B	EA	BRACKET - CORNER TRIM/SLIDEOUT - 3.1"X 3.1" - BRIGHT WHITE
			FROM: 02-09-06 THRU: 99-99-99
17	155997-01-T47	EA	PANEL END - F/SLIDEOUT (T47, T48)
17	155997-01-T43	EA	PANEL END - F/SLIDEOUT (T49, T50)
17	155997-01-T41	EA	PANEL END - F/SLIDEOUT (T51, T52)
18	139624-54-02A	EA	TRIM/SEAL - INNER - 57" - ALMOND
19	142718-42-01A	EA	RETAINER - SIDEWALL/SLIDEOUT - 55.8"
20	146056-01-000	FT	SEAL - TRIANGLE - W/PSA
21	157584-14-AA2	EA	TRIM/ZEE - W/SEAL/END CAPS - SLIDEOUT/LOWER-80.4"- BRT WHT
22	119845-01-01A	EA	PLUG/PLASTIC - 1 1/2" SQUARE - BLACK
23	142718-23-01A	EA	RETAINER - SIDEWALL/SLIDEOUT - 79.9"
24	099418-01-000	FT	SEAL - D-SECTION/ADHESIVE BACK - .44" X .44" - BLK RUBBER - NOT ILLUSTRATED
			FROM: 00-00-00 THRU: 02-08-06
24	158297-01-000	FT	SEAL - D-SECTION/BULB/TEE - ADHESIVE BACK - BLACK
			FROM: 02-09-06 THRU: 99-99-99
25	136824-02-01A	EA	TRIM - SIDEWALL/SLIDEOUT - 81.2" - BRIGHT WHITE
26	136978-01-01A	FT	SEAL - SLIDEOUT - BLACK
27	142549-01-000	EA	CLIP - “S” TYPE
28	151761-18-02A	EA	TRIM - SIDEWALL/SLIDEOUT/TOP - 81.4" - ALMOND
29	136824-54-01A	EA	TRIM - SIDEWALL/SLIDEOUT - 57.2" - BRIGHT WHITE
30	151760-25-02A	EA	TRIM - SIDEWALL/SLIDEOUT - 56.6" - ALMOND
	157809-01-01A	EA	SEAL - FOAM BLOCK/RIGHT SIDE - ADHESIVE BACK
			FROM: 01-08-06 THRU: 02-08-06
	157809-01-01A	EA	SEAL - FOAM BLOCK/LEFT SIDE - ADHESIVE BACK
			FROM: 01-08-06 THRU: 02-08-06

COPYRIGHT © 2006 WINNEBAGO INDUSTRIES INC.

EXTERIOR SLIDEOUT GROUP (CONTINUED)

REAR (CONTINUED)

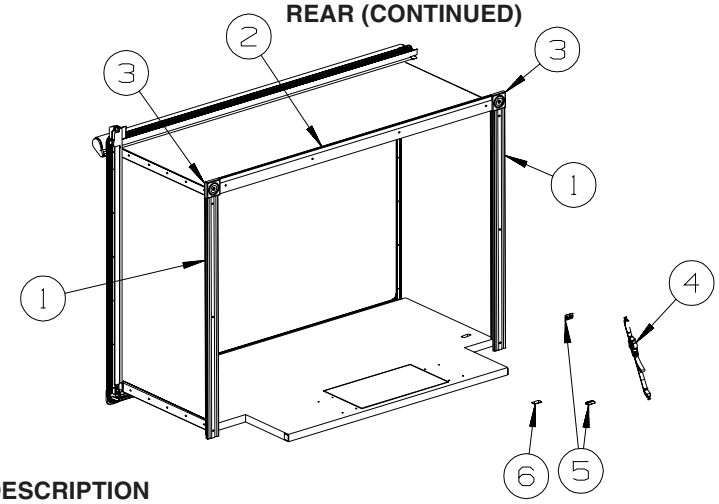

KEY	PART NUMBER	U/M	DESCRIPTION
1	132663-31-21A	EA	MOLDING-PAPER WRAP/PRE DRILLED - .6"X3"X54" - WASHED MAPLE
1	132663-31-22A	EA	MOLDING-PAPER WRAP/PRE DRILLED - .6"X3"X54" - SIERRA MAPLE
2	132663-18-21A	EA	MOLDING-VINYL WRAP/PRE DRILLED-.6"X 3.4"X 73.1"-WASHED MPL
2	132663-18-22A	EA	MOLDING-VINYL WRAP/PRE DRILLED-.6"X 3.4"X 73.1"-SIERRA MPL
3	132844-02-21A	EA	BLOCK - CORNER - 3.5" X 3.5" - WASHED MAPLE
3	132844-02-22A	EA	BLOCK - CORNER - 3.5" X 3.5" - SIERRA MAPLE
4	135619-01-01A	EA	STRAP - TIEDOWN - SLIDEOUT ROOM
5	135619-02-01A	EA	PLATE - TIEDOWN - SLIDEOUT ROOM
6	135622-01-02B	EA	PLATE - TIEDOWN - SLIDEOUT ROOM

COPYRIGHT © 2006 WINNEBAGO INDUSTRIES INC.

GENERATOR GROUP

GAS

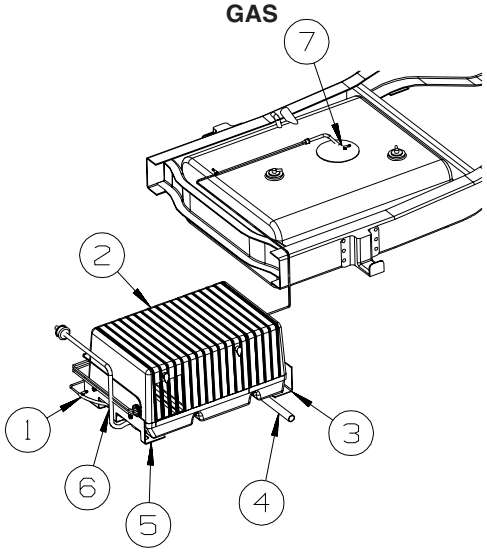

KEY	PART NUMBER	U/M	DESCRIPTION
1	128139-03-000	EA	HOSE - FUEL - LOW PERMEABILITY - 1/4" DIAMETER
2	109982-03-000	EA	GENERATOR - 4.0 MICROLITE - ONAN
3	114071-02-02B	EA	SUPPORT - GENERATOR - RIGHT
4	105958-29-000	EA	PIPE - EXHAUST/GENERATOR - 723D, 729H
4	105958-08-000	EA	PIPE - EXHAUST/GENERATOR - 1.5" OD X 3.1" X 19.7" - 726A
	007125-04-000	EA	CLAMP - MUFFLER - 1.12"DIAMETER
5	114070-02-02B	EA	SUPPORT - GENERATOR - LEFT
6	084884-01-000	EA	PLUG - BRASS - 3/8"
7	149468-01-000	EA	FITTING - F/FUEL-SENDING UNIT - 1/4"

COPYRIGHT © 2006 WINNEBAGO INDUSTRIES INC.

HEATING & A/C GROUP

FURNACE

KEY	PART NUMBER	U/M	DESCRIPTION
	069636-02-000	EA	CONNECTOR - DUCT - 4" ID
	089367-02-000	EA	TEE - 4" X 2" X 4"
	009198-01-000	FT	DUCT - HEAT - FLEXIBLE - 4" ID X 25'
	009198-02-000	FT	DUCT - HEAT - FLEXIBLE - 2" ID X 25'
	009200-01-000	EA	TAPE - FURNACE - 1 1/2"
	056464-11-000	EA	REGISTER W/DAMPER - 4" DIAMETER - PLASTIC - OFF WHITE - 726A
	056464-10-000	EA	REGISTER W/O DAMPER - 4" DIAMETER - PLASTIC - BEIGE
	093614-01-02A	EA	GRILLE - AIR RETURN - 15.9" X 7.9" - BEIGE - 723D
	093614-11-01A	EA	GRILLE - AIR RETURN - 13.9" X 7.9" - BEIGE - 726A, 729H
	098668-23-000	EA	DOOR - ACCESS - FURNACE - BRIGHT WHITE
	136516-01-01A	EA	WYE - 2" - DUCT
*	139980-01-000	EA	FURNACE - 25000 BTU - SF QUIET - SUBURBAN SF-25 2320J - FURNACE-25,000 BTU
*	139980-02-000	EA	FURNACE - 30000 BTU - SF QUIET - SUBURBAN SF-30 2321J - FURNACE-30,000 BTU

***COMPONENT PARTS LISTED LATER IN THIS GROUP**

COPYRIGHT © 2006 WINNEBAGO INDUSTRIES INC.

HEATING & A/C GROUP (CONTINUED)

COMPONENT PARTS FOR FURNACE

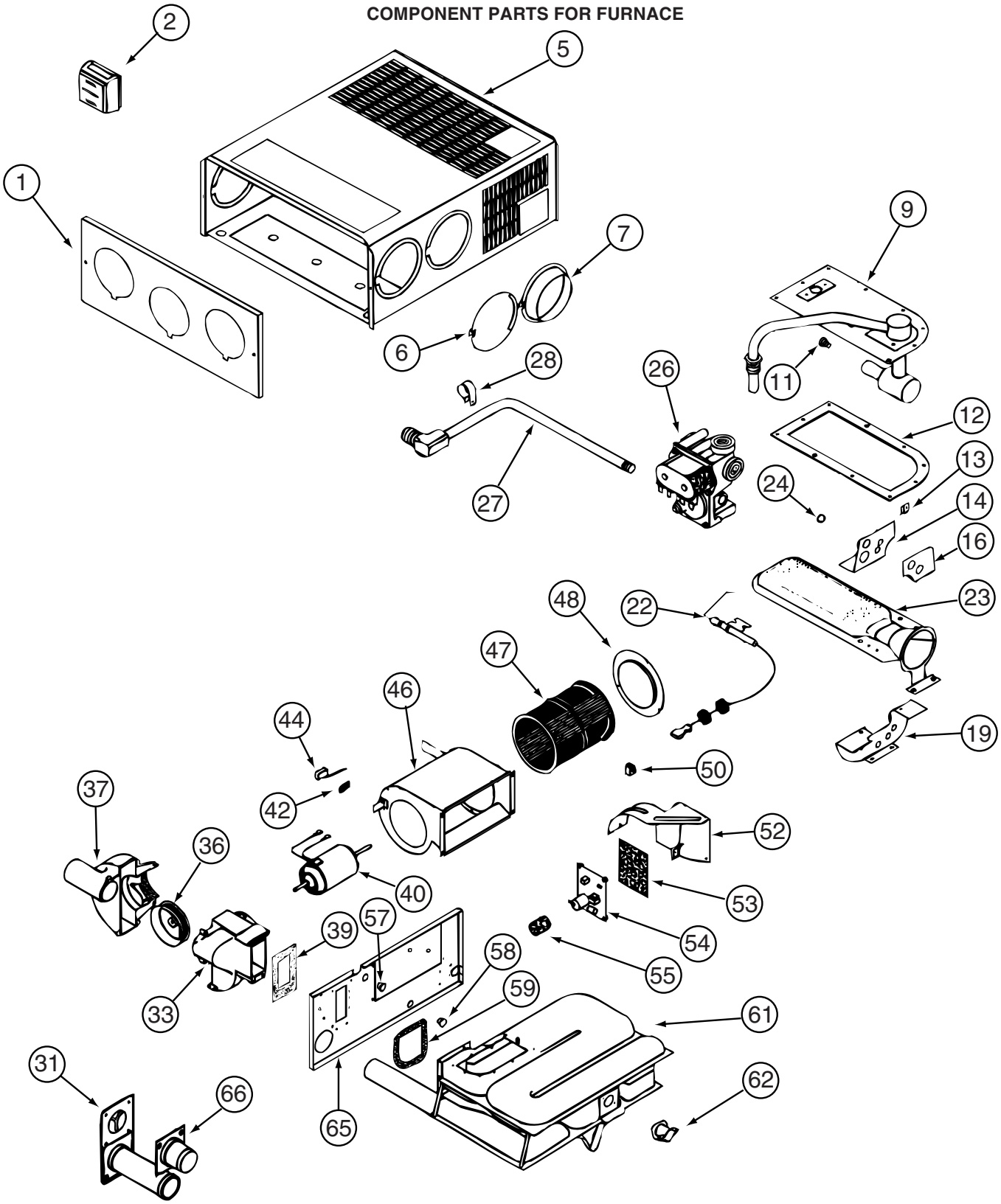

139980-01-000

COPYRIGHT © 2006 WINNEBAGO INDUSTRIES INC.

HEATING & A/C GROUP (CONTINUED)

COMPONENT PARTS FOR FURNACE (CONTINUED)

139980-01-000 (CONTINUED)

KEY	PART NUMBER	U/M	DESCRIPTION	VENDOR NO.
9	139980-01-700	EA	MANIFOLD ASSEMBLY	171571
11	090039-01-703	EA	ORIFICE-MAIN BURNER	180193
12	098668-22-703	EA	GASKET - BURNER ACCESS COVER	070811
22	139980-01-701	EA	ELECTRODE	232286
23	098668-01-703	EA	BURNER ASSEMBLY	010762
26	098668-01-718	EA	VALVE-GAS SF S.N.974903079	161122
27	139980-01-702	EA	PIPE ASSEMBLY/GAS INLET	171574
31	098668-01-707	EA	TUBE ASSEMBLY, EXHAUST W/CAP	260231
33	139980-01-703	EA	HOUSING/COMB. - FRONT/HALF	390852
36	098668-01-706	EA	WHEEL-COMBUSTION AIR	350184
37	139980-01-704	EA	HOUSING/COMB. - REAR/HALF	390848
39	139980-01-705	EA	GASKET/FIREWALL-COMB AIR	071084
40	139980-01-706	EA	MOTOR ASSEMBLY W/GASKET	232682
42	101990-01-714	EA	GASKET-MICROSWITCH	230877
44	098668-21-700	EA	SWITCH-MICRO-W/O FLAG 3 1/4"	232261
46	139980-01-708	EA	BLOWER ASSEMBLY - ROOM AIR	390739BK
47	098668-01-711	EA	WHEEL-BLOWER, ROOM AIR	350129
48	139980-01-709	EA	ORFICE RING	390696
50	139980-01-710	EA	SWITCH - ON/OFF	232351
52	139980-01-711	EA	PANEL ASSEMBLY-MODULE BD	101663
53	139980-01-712	EA	INSULATOR - MODULE BD	070807
54	098668-22-705	EA	MODULE BD W/RELAY TIME DELAY	520820
55	139980-01-713	EA	CAP/INSULATOR-MODULE BD	070973
57	139980-01-714	EA	BUSHING - UNIVERSAL	070362
58	139980-01-715	EA	BUSHING - STRAIN RELIEF	231809
59	098668-01-716	EA	GASKET-FIREWALL,CHAMBER SIDE	070808
61	139980-01-716	EA	CHAMBER ASSEMBLY - FINAL	021149BK
62	098668-21-701	EA	SWITCH - LIMIT	232504
66	098668-01-713	EA	TUBE ASSEMBLY, INTAKE	051248
	098668-19-700	EA	DOOR/CABINET ACCESS	101888
			CONTACT WINNEBAGO PART SALES FOR UNLISTED COMPONENT(S)	

COPYRIGHT © 2006 WINNEBAGO INDUSTRIES INC.

HEATING & A/C GROUP (CONTINUED)

COMPONENT PARTS FOR FURNACE (CONTINUED)

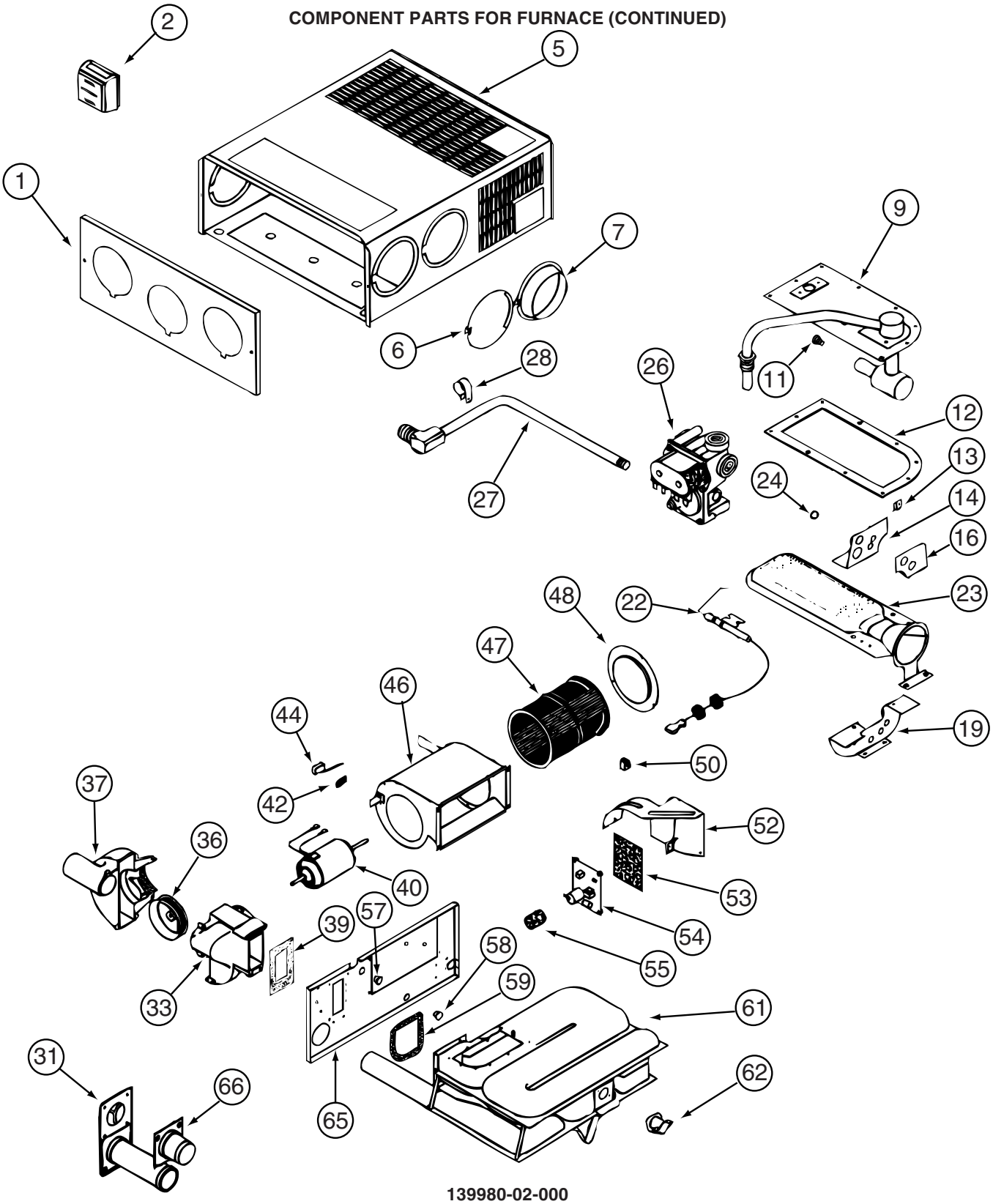

139980-02-000

COPYRIGHT © 2006 WINNEBAGO INDUSTRIES INC.

HEATING & A/C GROUP (CONTINUED)

COMPONENT PARTS FOR FURNACE (CONTINUED)

139980-02-000 (CONTNUED)

KEY	PART NUMBER	U/M	DESCRIPTION	VENDOR NO.
9	139980-01-700	EA	MANIFOLD ASSEMBLY	171571
11	092300-02-701	EA	ORIFICE-MAIN BURNER (NT-30BW	180214
12	098668-22-703	EA	GASKET - BURNER ACCESS COVER	070811
22	139980-01-701	EA	ELECTRODE	232286
23	098668-02-700	EA	BURNER ASSEMBLY,SF-30 & SF35	010745
26	098668-01-718	EA	VALVE-GAS SF S.N.974903079	161122
27	139980-01-702	EA	PIPE ASSEMBLY/GAS INLET	171574
31	098668-01-707	EA	TUBE ASSEMBLY, EXHAUST W/CAP	260231
33	139980-01-703	EA	HOUSING/COMB. - FRONT/HALF	390852
36	098668-01-706	EA	WHEEL-COMBUSTION AIR	350184
37	139980-01-704	EA	HOUSING/COMB. - REAR/HALF	390848
39	139980-01-705	EA	GASKET/FIREWALL-COMB AIR	071084
40	139980-01-706	EA	MOTOR ASSEMBLY W/GASKET	232682
42	101990-01-714	EA	GASKET-MICROSWITCH	230877
44	098668-21-700	EA	SWITCH-MICRO-W/O FLAG 3 1/4"	232261
46	139980-01-708	EA	BLOWER ASSEMBLY - ROOM AIR	390739BK
47	098668-01-711	EA	WHEEL-BLOWER, ROOM AIR	350129
48	139980-01-709	EA	ORFICE RING	390696
50	139980-01-710	EA	SWITCH - ON/OFF	232351
52	139980-01-711	EA	PANEL ASSEMBLY-MODULE BD	101663
53	139980-01-712	EA	INSULATOR - MODULE BD	070807
54	098668-22-705	EA	MODULE BD W/RELAY TIME DELAY	520820
55	139980-01-713	EA	CAP/INSULATOR-MODULE BD	070973
57	139980-01-714	EA	BUSHING - UNIVERSAL	070362
58	139980-01-715	EA	BUSHING - STRAIN RELIEF	231809
59	098668-01-716	EA	GASKET-FIREWALL,CHAMBER SIDE	070808
61	139980-01-716	EA	CHAMBER ASSEMBLY - FINAL	021149BK
62	098668-21-701	EA	SWITCH - LIMIT	232504
66	098668-01-713	EA	TUBE ASSEMBLY, INTAKE	051248
			CONTACT WINNEBAGO PART SALES FOR UNLISTED COMPONENT(S)	

COPYRIGHT © 2006 WINNEBAGO INDUSTRIES INC.

HEATING & A/C GROUP (CONTINUED)

ROOF

KEY	PART NUMBER	U/M	DESCRIPTION
*	131184-01-01A	EA	CEILING ASSEMBLY - A/C DUCTED - WHITE
*	131184-05-01A	EA	CEILING ASSEMBLY - HEAT PUMP - WHITE - A/C HEAT PUMP - HI EFF LOW PROFILE
	131184-02-01A	EA	BOARD - DIVIDER - SILVER
*	148644-01-01A	EA	A/C-ROOF - LOW PROFILE - ART WHITE - RVP 9203C876
*	148644-02-01A	EA	A/C-ROOF-LOW PROFILE/HEAT PMP-ART WHT-RVP9003C876-A/C HEAT PUMP - HI EFF LOW PROFILE

***COMPONENT PARTS LISTED LATER IN THIS GROUP**

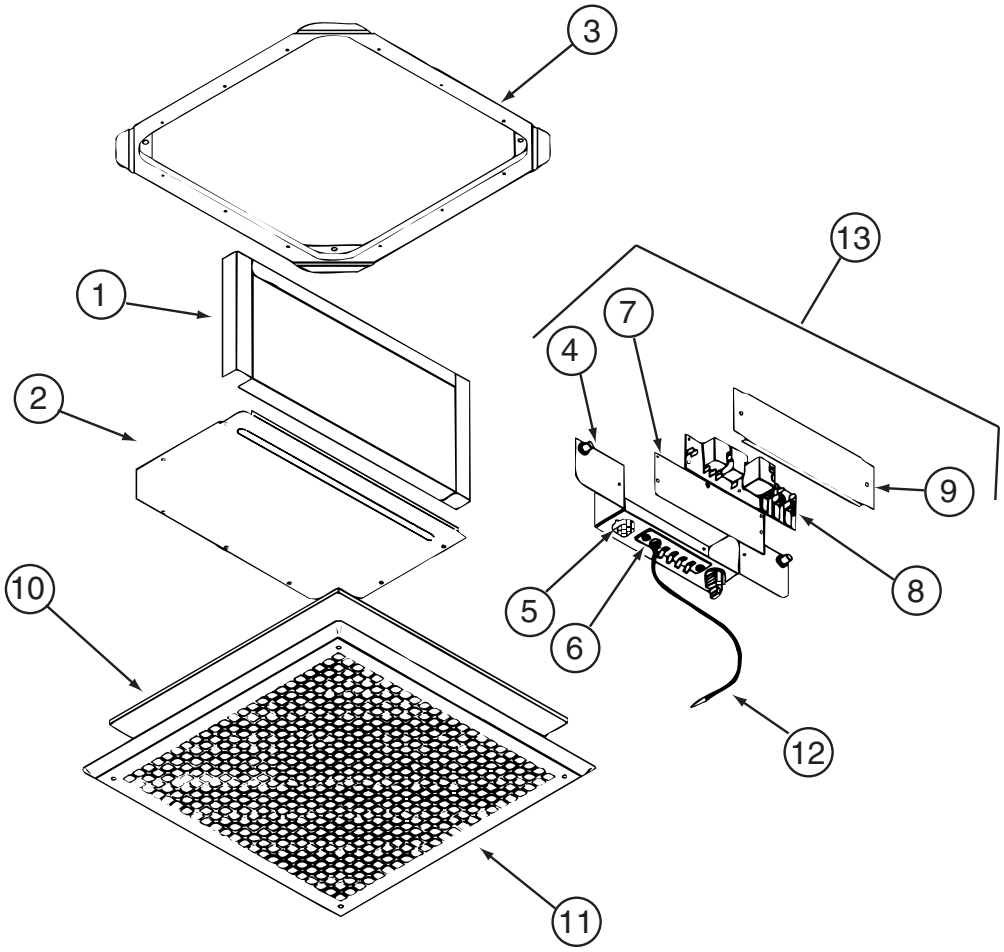

COMPONENT PARTS FOR ROOF

131184-01-01A

KEY	PART NUMBER	U/M	DESCRIPTION	VENDOR NO.
1	131184-01-707	EA	DUCT DIVIDER	8330-3501
5	131184-01-700	EA	PLUG ASSEMBLY	7330A389
6	131184-01-701	EA	TERMINAL BOARD	7330B3201
7	131184-01-702	EA	ISOLATOR - BLANK	7330C365
8	108892-01-702	EA	BOARD-P.C.	7330A3211
10	108892-01-703	EA	FILTER	6798A3761
11	108892-01-704	EA	GRILLE 16 3/8X16 3/8 RETURN	6798-3041
12	131184-01-704	EA	COIL SENSOR	7330-6111
13	131184-01-705	EA	JUNCTION BOX ASSEMBLY	7330B5551
	131184-01-703	EA	SMALL PARTS PKG	8330-5961

CONTACT WINNEBAGO PART SALES FOR UNLISTED COMPONENT(S)

COPYRIGHT © 2006 WINNEBAGO INDUSTRIES INC.

HEATING & A/C GROUP (CONTINUED)

COMPONENT PARTS FOR ROOF (CONTINUED)

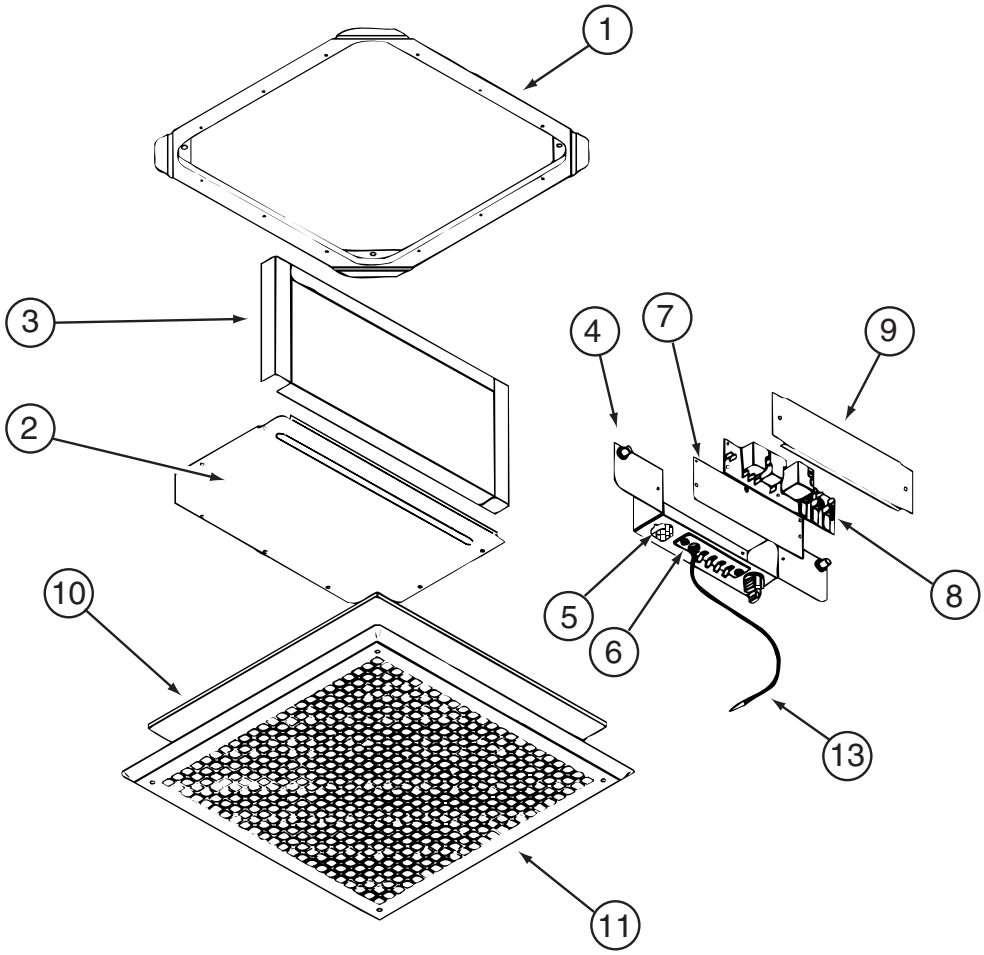

131184-05-01A

KEY	PART NUMBER	U/M	DESCRIPTION	VENDOR NO.
4	131184-05-700	EA	BOX - JUNCTION	8530-5091
5	131184-04-700	EA	PLUG ASSEMBLY	7530A340
6	131184-04-702	EA	BOARD - TERMINAL	7530B3201
7	131184-01-702	EA	ISOLATOR - BLANK	7330C365
8	131184-04-705	EA	BOARD - P.C.	7330B3311
10	108892-01-703	EA	FILTER	6798A3761
11	108892-01-704	EA	GRILLE 16 3/8X16 3/8 RETURN	6798-3041
13	105620-12-719	EA	COIL SENSOR	7330A3231
	131184-01-703	EA	SMALL PARTS PKG	8330-5961
			CONTACT WINNEBAGO PART SALES FOR UNLISTED COMPONENT(S)	

COPYRIGHT © 2006 WINNEBAGO INDUSTRIES INC.

HEATING & A/C GROUP (CONTINUED)

COMPONENT PARTS FOR ROOF (CONTINUED)

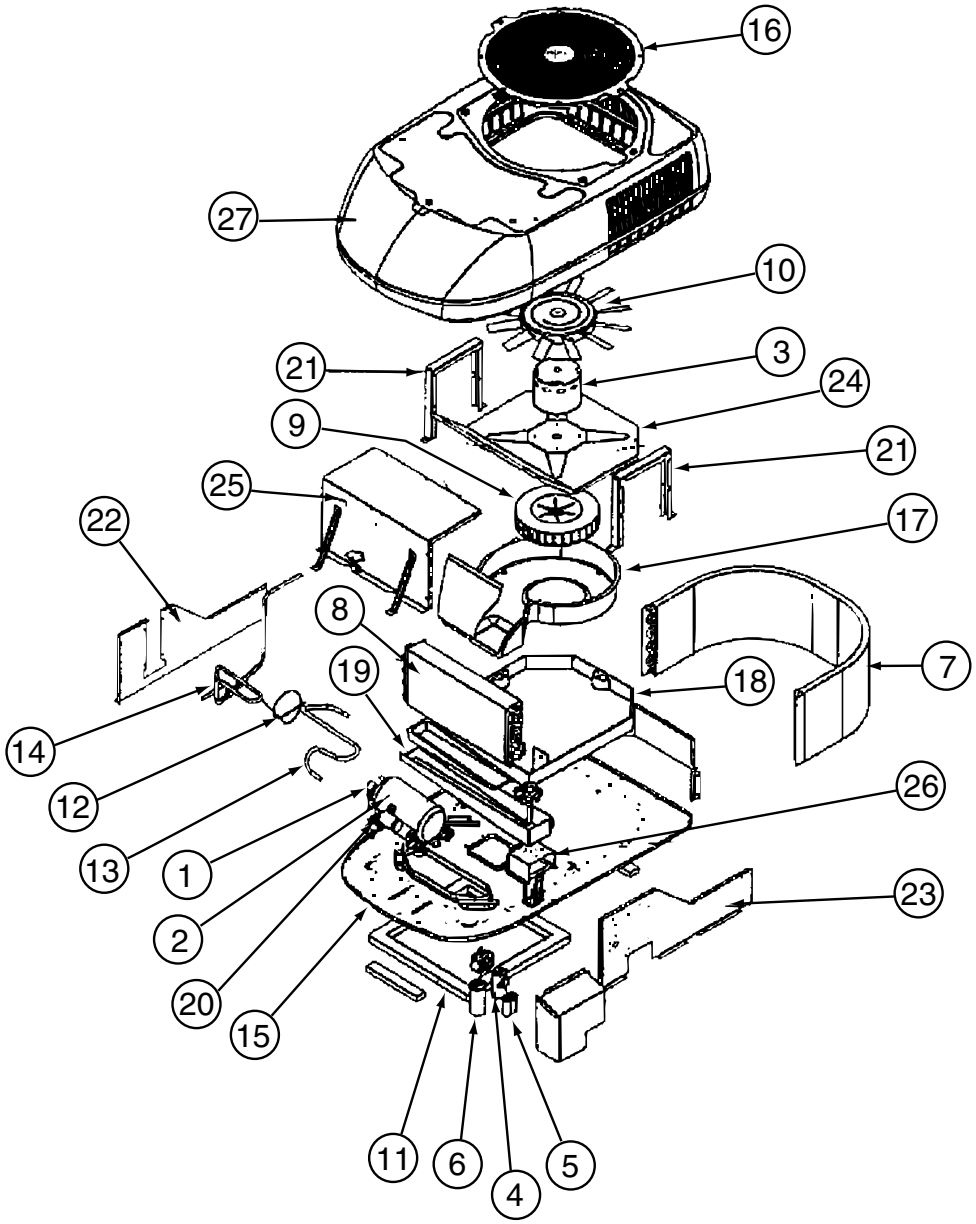

148644-01-01A

KEY	PART NUMBER	U/M	DESCRIPTION	VENDOR NO.
1	148644-01-701	EA	OVERLOAD	1450-0131
2	148644-01-702	EA	COMPRESSOR	1450A2189
3	148644-01-703	EA	MOTOR - BLOWER	1468A3239
4	105620-10-705	EA	PTCR (START DEVICE) - W/CAP.	8333A9021
5	093763-01-704	EA	CAPACITOR-FAN (INDOOR MOTOR)	1499-5461
6	131188-01-701	EA	RUN CAP. (COMP-40MFD/370V)	1499-5721
7	148644-01-704	EA	COIL-CONDENSER	1452-1201
8	148644-01-705	EA	COIL - EVAPORATOR	1452-1211
9	147102-01-705	EA	BLOWER WHEEL	1472-1111
10	147102-01-706	EA	FAN BLADE	1472-5021
11	037648-01-714	EA	GASKET PACKAGE	8332-3301
27	148644-01-700	EA	SHROUD - (ARCTIC WHITE)	9233A5461

CONTACT WINNEBAGO PART SALES FOR UNLISTED COMPONENT(S)

COPYRIGHT © 2006 WINNEBAGO INDUSTRIES INC.

HEATING & A/C GROUP (CONTINUED)

COMPONENT PARTS FOR ROOF (CONTINUED)

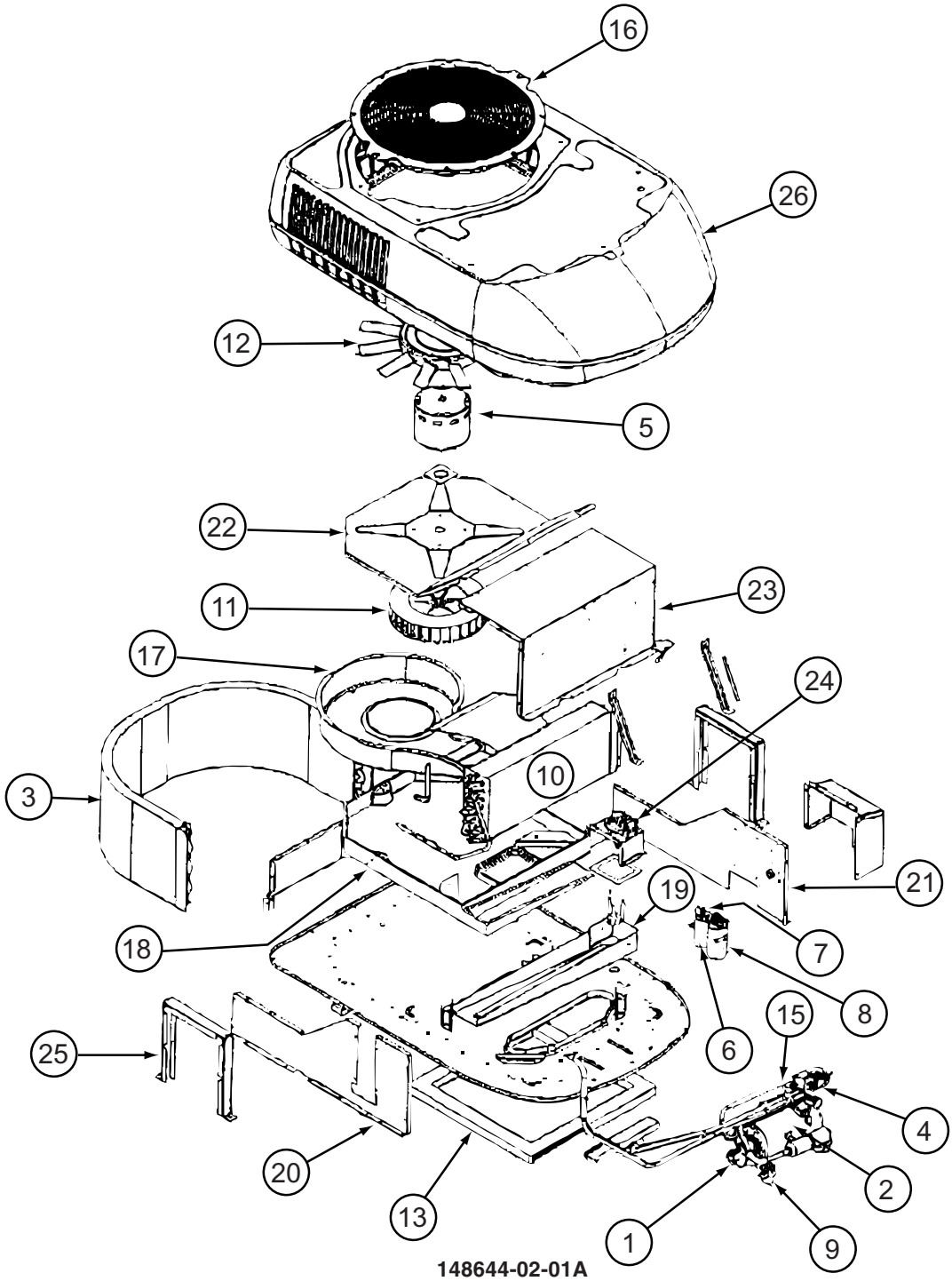

148644-02-01A

KEY	PART NUMBER	U/M	DESCRIPTION	VENDOR NO.
1	148644-01-701	EA	OVERLOAD	1450-0131
2	148644-01-702	EA	COMPRESSOR	1450A2189
3	148644-02-700	EA	COIL - CONDENSER	1452-1241
4	105620-12-708	EA	COIL - SOLENOID	1460-1081
5	148644-01-703	EA	MOTOR - BLOWER	1468A3239
6	105620-10-705	EA	PTCR (START DEVICE) - W/CAP.	8333A9021
7	093763-01-704	EA	CAPACITOR-FAN (INDOOR MOTOR)	1499-5461
8	131188-01-701	EA	RUN CAP. (COMP-40MFD/370V)	1499-5721
10	148644-02-701	EA	COIL - EVAPORATOR	1452-1261
11	147102-01-705	EA	BLOWER WHEEL	1472-1111
12	147102-01-706	EA	FAN BLADE	1472-5021
13	037648-01-714	EA	GASKET PACKAGE	8332-3301
26	148644-01-700	EA	SHROUD - (ARCTIC WHITE)	9233A5461
			CONTACT WINNEBAGO PART SALES FOR UNLISTED COMPONENT(S)	

COPYRIGHT © 2006 WINNEBAGO INDUSTRIES INC.

INTERIOR FINISH GROUP

MOLDINGS & TRIMS
WASHED MAPLE, SIERRA MAPLE

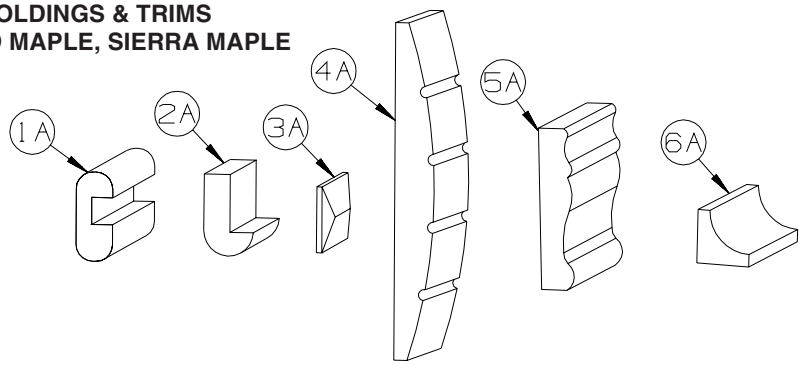

KEY	PART NUMBER	U/M	DESCRIPTION
1A	M09412-62-N42	EA	MOLDING/SHELF EDGE - .6" X 1.3" X 96" - PORTSMOUTH OAK
1A	M09412-62-M52	EA	MOLDING/SHELF EDGE - .6" X 1.3" X 96" - CHERRY - CONCERT CHERRY
1A	M09412-62-M62	EA	MOLDING/SHELF EDGE - .6" X 1.3" X 96" - WASHED MAPLE - WASHED MAPLE
1A	M09412-62-RC3	EA	MOLDING/SHELF EDGE - .6" X 1.3" X 96" - HONEY CHERRY - HONEY CHERRY
1A	M09412-62-SA3	EA	MOLDING/SHELF EDGE - .6" X 1.3" X 96" - MAPLE - SIERRA MAPLE
2A	M09450-77-PC0	EA	MOLDING - TRIM/HDWD W/LIP -.4"X3.2"X79.6" - PORTSMOUTH OAK
2A	M09450-77-PC1	EA	MOLDING - TRIM/HDWD W/LIP -.4"X3.2"X79.6" - CONCERT CHERRY
2A	M09450-77-PC2	EA	MOLDING - TRIM/HDWD W/LIP -.4"X3.2"X79.6" - WASHED MAPLE
2A	M09450-77-RC3	EA	MOLDING - TRIM/HDWD W/LIP -.4"X3.2"X79.6" - HONEY CHERRY
2A	M09501-31-TG0	EA	MOLDING/TRIM - .8" X 3.5" X 86.2" - PORTSMOUTH OAK
2A	M09501-31-TG1	EA	MOLDING/TRIM - .8" X 3.5" X 86.2" - CONCERT CHERRY
2A	M09501-31-TG2	EA	MOLDING/TRIM - .8" X 3.5" X 86.2" - WASHED MAPLE
2A	M09501-31-TG3	EA	MOLDING/TRIM - .8" X 3.5" X 86.2" - HONEY CHERRY
2A	M09501-31-TD3	EA	MOLDING/TRIM - .8" X 3.5" X 86.2" - SIERRA MAPLE
2A	M09501-32-TD3	EA	MOLDING/TRIM - W/NOTCH - .8" X 2.5" X 86.2"
2A	M09501-32-TG0	EA	MOLDING/TRIM - W/NOTCH - .8" X 2.5" X 86.2" - PORTSMOUTH OAK
2A	M09501-32-TG1	EA	MOLDING/TRIM - W/NOTCH - .8" X 2.5" X 86.2"-CONCERT CHERRY
2A	M09501-32-TG2	EA	MOLDING/TRIM - W/NOTCH - .8" X 2.5" X 86.2" - WASHED MAPLE,
2A	M09501-32-TG3	EA	MOLDING/TRIM - W/NOTCH - .8" X 2.5" X 86.2" - HONEY CHERRY
2A	M09503-52-T77	EA	MOLDING/TRIM - .75" X 1.2" X 86.5" - PORTSMOUTH OAK
2A	M09503-52-T78	EA	MOLDING/TRIM - .75" X 1.2" X 86.5" - CONCERT CHERRY
2A	M09503-52-T79	EA	MOLDING/TRIM - .75" X 1.2" X 86.5" - WASHED MAPLE
2A	M09503-52-T80	EA	MOLDING/TRIM - .75" X 1.2" X 86.5" - SIERRA MAPLE
2A	M09511-43-T77	EA	MOLDING - TRIM - W/NOTCH - .8" X 1.4" X 86.3" - PORTSMOUTH OAK
2A	M09511-43-T78	EA	MOLDING - TRIM - W/NOTCH - .8" X 1.4" X 86.3" - CONCERT CHERRY
2A	M09511-43-T79	EA	MOLDING - TRIM - W/NOTCH - .8" X 1.4" X 86.3" - WASHED MAPLE
2A	M09438-25-RA3	EA	MOLDING - HARDWOOD-W/NOTCH - 1.4"X 80.2" - CHERRY/HONEY - HONEY CHERRY
2A	M09511-43-T80	EA	MOLDING - TRIM - W/NOTCH - .8" X 1.4" X 86.3" - SIERRA MAPLE
2A	M09511-44-T77	EA	MOLDING - TRIM - W/NOTCH - 1" X 86.4" - PORTSMOUTH OAK
2A	M09511-44-T78	EA	MOLDING - TRIM - W/NOTCH - 1" X 86.4" - CONCERT CHERRY
2A	M09511-44-T79	EA	MOLDING - TRIM - W/NOTCH - 1" X 86.4" - WASHED MAPLE
2A	M09454-25-RA3	EA	MOLDING - HARDWOOD-W/NOTCH - 1" X 77.6" - HONEY CHERRY
2A	M09511-44-T80	EA	MOLDING - TRIM - W/NOTCH - 1" X 86.4" - SIERRA MAPLE
2A	M09515-72-TD0	EA	MOLDING/TRIM - .8" X 2.2" X 86.1" - PORTSMOUTH OAK
2A	M09515-72-TD1	EA	MOLDING/TRIM - .8" X 2.2" X 86.1" - CONCERT CHERRY
2A	M09515-72-TD2	EA	MOLDING/TRIM - .8" X 2.2" X 86.1" - WASHED MAPLE
2A	M09515-72-TD3	EA	MOLDING/TRIM - .8" X 2.2" X 86.1" - SIERRA MAPLE
2A	M09515-73-TD0	EA	MOLDING/TRIM - 4" X 86.1" - PORTSMOUTH OAK
2A	M09515-73-TD1	EA	MOLDING/TRIM - 4" X 86.1" - CONCERT CHERRY
2A	M09515-73-TD2	EA	MOLDING/TRIM - 4" X 86.1" - WASHED MAPLE
2A	M09515-73-TD3	EA	MOLDING/TRIM - 4" X 86.1" - SIERRA MAPLE
3A	M09471-37-R44	EA	MOLDING - TRIM/VEE - .2" X 1" X 33" - PORTSMOUTH OAK
3A	M09471-37-R45	EA	MOLDING - TRIM/VEE - .2" X 1" X 33" - CONCERT CHERRY
3A	M09471-37-R46	EA	MOLDING - TRIM/VEE - .2" X 1" X 33" - WASHED MAPLE
3A	M09471-37-SD3	EA	MOLDING - TRIM/VEE - .2" X 1" X 33" - HONEY CHERRY
3A	M09471-91-R68	EA	MOLDING - TRIM/VEE - .2" X 1" X 34.4" - PORTSMOUTH OAK
3A	M09471-91-R69	EA	MOLDING - TRIM/VEE - .2" X 1" X 34.4" - CONCERT CHERRY
3A	M09471-91-R76	EA	MOLDING - TRIM/VEE - .2" X 1" X 34.4" - WASHED MAPLE
3A	M09471-91-SA3	EA	MOLDING - TRIM/VEE - .2" X 1" X 34.4" - SIERRA MAPLE
3A	M09477-88-S34	EA	MOLDING - TRIM/VEE - .2" X 1" X 19.9" - WASHED MAPLE
3A	M09477-88-S35	EA	MOLDING - TRIM/VEE - .2" X 1" X 19.9" - SIERRA MAPLE
3A	M09501-30-SD0	EA	MOLDING - TRIM/VEE - .2" X 1" X 35.1" - PORTSMOUTH OAK

COPYRIGHT © 2006 WINNEBAGO INDUSTRIES INC.

INTERIOR FINISH GROUP (CONTINUED)

MOLDINGS & TRIMS (CONTINUED)

KEY	PART NUMBER	U/M	DESCRIPTION
3A	M09501-30-SD1	EA	MOLDING - TRIM/VEE - .2" X 1" X 35.1" - CONCERT CHERRY
3A	M09501-30-SD2	EA	MOLDING - TRIM/VEE - .2" X 1" X 35.1" - WASHED MAPLE
3A	M09501-30-SD3	EA	MOLDING - TRIM/VEE - .2" X 1" X 35.1" - HONEY CHERRY
3A	M09501-37-TG0	EA	MOLDING - TRIM/VEE - .2" X 1" X 19.2" - PORTSMOUTH OAK
3A	M09501-37-TG1	EA	MOLDING - TRIM/VEE - .2" X 1" X 19.2" - CONCERT CHERRY
3A	M09501-37-TG2	EA	MOLDING - TRIM/VEE - .2" X 1" X 19.2" - WASHED MAPLE
3A	M09501-37-TD3	EA	MOLDING - TRIM/VEE - .2" X 1" X 19.2" - SIERRA MAPLE
3A	M09501-37-TG3	EA	MOLDING - TRIM/VEE - .2" X 1" X 19.2" - HONEY CHERRY
3A	M09501-63-T77	EA	MOLDING - TRIM/VEE - .2" X 1" X 15" - PORTSMOUTH OAK
3A	M09501-63-T78	EA	MOLDING - TRIM/VEE - .2" X 1" X 15" - CONCERT CHERRY
3A	M09501-63-T79	EA	MOLDING - TRIM/VEE - .2" X 1" X 15" - WASHED MAPLE
3A	M09501-63-T80	EA	MOLDING - TRIM/VEE - .2" X 1" X 15" - SIERRA MAPLE
3A	M09503-62-TG0	EA	MOLDING - TRIM/VEE - .2" X 1" X 26.3" - PORTSMOUTH OAK
3A	M09503-62-TG1	EA	MOLDING - TRIM/VEE - .2" X 1" X 26.3" - CONCERT CHERRY
3A	M09503-62-TG2	EA	MOLDING - TRIM/VEE - .2" X 1" X 26.3" - WASHED MAPLE
3A	M09503-62-TG3	EA	MOLDING - TRIM/VEE - .2" X 1" X 26.3" - HONEY CHERRY
3A	M09511-90-TG0	EA	MOLDING - TRIM/VEE - .2" X 1" X 42.1" - PORTSMOUTH OAK
3A	M09511-90-TG1	EA	MOLDING - TRIM/VEE - .2" X 1" X 42.1" - CONCERT CHERRY
3A	M09511-90-TG3	EA	MOLDING - TRIM/VEE - .2" X 1" X 42.1" - HONEY CHERRY
3A	M09511-90-TG2	EA	MOLDING - TRIM/VEE - .2" X 1" X 42.1" - WASHED MAPLE
3A	M09515-71-T78	EA	MOLDING - TRIM/VEE - .2" X 1" X 14.9" - CONCERT CHERRY
3A	M09515-71-T77	EA	MOLDING - TRIM/VEE - .2" X 1" X 14.9" - PORTSMOUTH OAK
3A	M09515-71-T80	EA	MOLDING - TRIM/VEE - .2" X 1" X 14.9" - SIERRA MAPLE
3A	M09515-71-T79	EA	MOLDING - TRIM/VEE - .2" X 1" X 14.9" - WASHED MAPLE
3A	M09520-15-TD0	EA	MOLDING - TRIM/VEE - .2" X 1" X 15.3" - PORTSMOUTH OAK
3A	M09520-15-TD1	EA	MOLDING - TRIM/VEE - .2" X 1" X 15.3" - CONCERT CHERRY
3A	M09520-15-TD2	EA	MOLDING - TRIM/VEE - .2" X 1" X 15.3" - WASHED MAPLE
3A	M09520-15-TD3	EA	MOLDING - TRIM/VEE - .2" X 1" X 15.3" - SIERRA MAPLE
3A	M09520-96-T59	EA	MOLDING - TRIM/VEE - .2" X 1" X 32.7" - PORTSMOUTH OAK
3A	M09520-96-T60	EA	MOLDING - TRIM/VEE - .2" X 1" X 32.7" - CONCERT CHERRY
3A	M09520-96-T61	EA	MOLDING - TRIM/VEE - .2" X 1" X 32.7" - WASHED MAPLE
3A	M09520-96-TP0	EA	MOLDING - TRIM/VEE - .2" X 1" X 32.7" - SIERRA MAPLE
3A	M09511-32-T77	EA	MOLDING - TRIM/VEE - .4" X 1" X 26.8" - PORTSMOUTH OAK
3A	M09511-32-T78	EA	MOLDING - TRIM/VEE - .4" X 1" X 26.8" - CONCERT CHERRY
3A	M09511-32-T79	EA	MOLDING - TRIM/VEE - .4" X 1" X 26.8" - WASHED MAPLE
3A	M09511-32-T80	EA	MOLDING - TRIM/VEE - .4" X 1" X 26.8" - SIERRA MAPLE
3A	M09511-84-T77	EA	MOLDING - TRIM/VEE - .4" X 1" X 13.5" - PORTSMOUTH OAK
3A	M09511-84-T78	EA	MOLDING - TRIM/VEE - .4" X 1" X 13.5" - CONCERT CHERRY
3A	M09511-84-T79	EA	MOLDING - TRIM/VEE - .4" X 1" X 13.5" - WASHED MAPLE
3A	M09511-84-T80	EA	MOLDING - TRIM/VEE - .4" X 1" X 13.5" - SIERRA MAPLE
3A	M09511-85-T77	EA	MOLDING - TRIM/VEE - .4" X 1" X 10.7" - PORTSMOUTH OAK
3A	M09511-85-T78	EA	MOLDING - TRIM/VEE - .4" X 1" X 10.7" - CONCERT CHERRY
3A	M09511-85-T79	EA	MOLDING - TRIM/VEE - .4" X 1" X 10.7" - WASHED MAPLE
3A	M09511-85-T80	EA	MOLDING - TRIM/VEE - .4" X 1" X 10.7" - SIERRA MAPLE
3A	M09511-86-T77	EA	MOLDING - TRIM/VEE - .4" X 1" X 28.3" - PORTSMOUTH OAK
3A	M09511-86-T78	EA	MOLDING - TRIM/VEE - .4" X 1" X 28.3" - CONCERT CHERRY
3A	M09511-86-T79	EA	MOLDING - TRIM/VEE - .4" X 1" X 28.3" - WASHED MAPLE
3A	M09511-86-T80	EA	MOLDING - TRIM/VEE - .4" X 1" X 28.3" - SIERRA MAPLE
3A	M09477-63-S46	EA	MOLDING - TRIM/VEE - .4" X 1" X 64.1" - PORTSMOUTH OAK - BATH DOOR TRIM
3A	M09477-63-S47	EA	MOLDING - TRIM/VEE - .4" X 1" X 64.1" - CONCERT CHERRY - BATH DOOR TRIM
3A	M09477-63-S48	EA	MOLDING - TRIM/VEE - .4" X 1" X 64.1" - WASHED MAPLE - BATH DOOR TRIM
3A	M09477-63-SR0	EA	MOLDING - TRIM/VEE - .4" X 1" X 64.1" - SIERRA MAPLE - BATH DOOR TRIM
3A	M09477-64-S46	EA	MOLDING - TRIM/VEE - .4" X 1" X 14.9" - PORTSMOUTH OAK - BATH DOOR TRIM
3A	M09477-64-S47	EA	MOLDING - TRIM/VEE - .4" X 1" X 14.9" - CONCERT CHERRY - BATH DOOR TRIM
3A	M09477-64-S48	EA	MOLDING - TRIM/VEE - .4" X 1" X 14.9" - WASHED MAPLE - BATH DOOR TRIM
3A	M09477-64-SR0	EA	MOLDING - TRIM/VEE - .4" X 1" X 14.9" - SIERRA MAPLE - BATH DOOR TRIM
4A	M09462-54-R89	EA	MOLDING - FLUTED, CURVED - .6" X 6" X 82.7" - PORTSMOUTH OAK
4A	M09462-54-R90	EA	MOLDING - FLUTED, CURVED - .6" X 6" X 82.7" - CONCERT CHERRY
4A	M09462-54-R91	EA	MOLDING - FLUTED, CURVED - .6" X 6" X 82.7" - WASHED MAPLE
4A	M09462-54-RE3	EA	MOLDING - FLUTED, CURVED - .6" X 6" X 82.7" - HONEY CHERRY

COPYRIGHT © 2006 WINNEBAGO INDUSTRIES INC.

INTERIOR FINISH GROUP (CONTINUED)

MOLDINGS & TRIMS (CONTINUED)

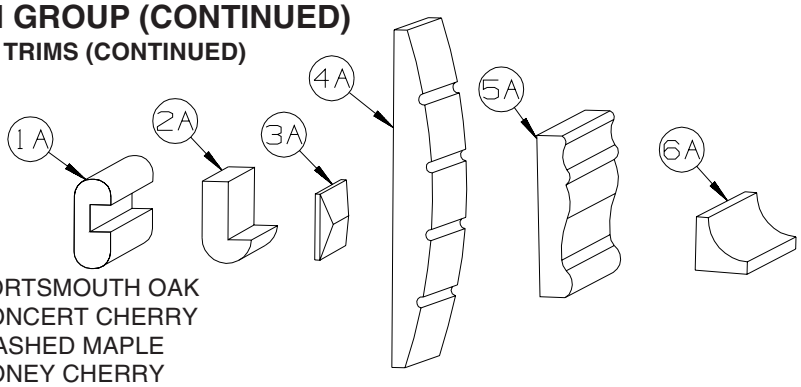

KEY	PART NUMBER	U/M	DESCRIPTION
5A	M09462-66-R74	EA	TRIM - RAIL - .5” X 2.4” X 96” - PORTSMOUTH OAK
5A	M09462-66-R75	EA	TRIM - RAIL - .5” X 2.4” X 96” - CONCERT CHERRY
5A	M09462-66-R76	EA	TRIM - RAIL - .5” X 2.4” X 96” - WASHED MAPLE
5A	M09462-66-RE0	EA	TRIM - RAIL - .5” X 2.4” X 96” - HONEY CHERRY
5A	M09462-66-SA3	EA	TRIM - RAIL - .5” X 2.4” X 96” - SIERRA MAPLE
6A	M09471-79-R38	EA	MOLDING - TRIM/COVE - .8" X .8" X 95.8" - OAK/PORTS OAK - PORTSMOUTH OAK
6A	M09471-79-R39	EA	MOLDING - TRIM/COVE - .8" X .8" X 95.8" - CHERRY/CHERRY - CONCERT CHERRY
6A	M09471-79-R46	EA	MOLDING - TRIM/COVE - .8" X .8" X 95.8" - MAPLE/MAPLE - WASHED MAPLE
6A	M09471-79-RE0	EA	MOLDING - TRIM/COVE - .8" X .8" X 95.8" - HONEY/CHERRY- HONEY CHERRY
6A	M09471-79-SA3	EA	MOLDING - TRIM/COVE - .8" X .8" X 95.8" - HONEY/MAPLE - SIERRA MAPLE

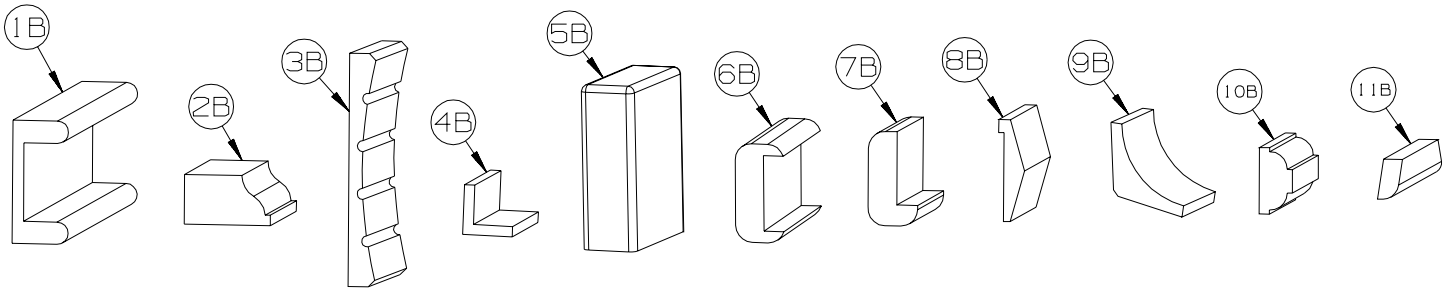

KEY	PART NUMBER	U/M	DESCRIPTION
1B	M09501-84-TG0	EA	MOLDING/TRIM - CAP/WALL - 2.2" X 85.9" - PORTSMOUTH OAK
1B	M09501-84-TG1	EA	MOLDING/TRIM - CAP/WALL - 2.2" X 85.9" - CONCERT CHERRY
1B	M09501-84-TG2	EA	MOLDING/TRIM - CAP/WALL - 2.2" X 85.9" - WASHED MAPLE
1B	M09501-84-TG3	EA	MOLDING/TRIM - CAP/WALL - 2.2" X 85.9" - HONEY CHERRY
2B	M09511-28-T77	EA	MOLDING/TRIM - .8" X 1.3" X 91.8" - PORTSMOUTH OAK
2B	M09511-28-T78	EA	MOLDING/TRIM - .8" X 1.3" X 91.8" - CONCERT CHERRY
2B	M09511-28-T79	EA	MOLDING/TRIM - .8" X 1.3" X 91.8" - WASHED MAPLE
2B	M09511-28-T80	EA	MOLDING/TRIM - .8" X 1.3" X 91.8" - SIERRA MAPLE
3B	M09511-73-TE4	EA	MOLDING/TRIM - FLUTED - 4.1" X 92.5" - PORTSMOUTH OAK
3B	M09511-73-TE5	EA	MOLDING/TRIM - FLUTED - 4.1" X 92.5" - CONCERT CHERRY
3B	M09511-73-TE6	EA	MOLDING/TRIM - FLUTED - 4.1" X 92.5" - WASHED MAPLE
3B	M09511-73-TE7	EA	MOLDING/TRIM - FLUTED - 4.1" X 92.5" - SIERRA MAPLE
4B	M09511-81-TA0	EA	MOLDING/TRIM - FLUTED - 4.1" X 92.5" - PORTSMOUTH OAK
4B	M09511-81-TA1	EA	MOLDING/TRIM - FLUTED - 4.1" X 92.5" - CONCERT CHERRY
4B	M09511-81-TA2	EA	MOLDING/TRIM - FLUTED - 4.1" X 92.5" - WASHED MAPLE
4B	M09511-81-TA3	EA	MOLDING/TRIM - FLUTED - 4.1" X 92.5" - SIERRA MAPLE
5B	M09515-81-T01	EA	MOLDING/HARDWOOD STRAIGHT - 74.3” - WASHED MAPLE
5B	M09515-81-T02	EA	MOLDING/HARDWOOD STRAIGHT - 74.3” - HONEY CHERRY
6B	M09511-42-T77	EA	MOLDING - TRIM - W/NOTCH - 1.5" X 86.4" - PORTSMOUTH OAK
6B	M09511-42-T78	EA	MOLDING - TRIM - W/NOTCH - 1.5" X 86.4" - CONCERT CHERRY
6B	M09511-42-T79	EA	MOLDING - TRIM - W/NOTCH - 1.5" X 86.4" - WASHED MAPLE
6B	M09511-42-T80	EA	MOLDING - TRIM - W/NOTCH - 1.5" X 86.4" - SIERRA MAPLE
7B	M09515-18-T77	EA	MOLDING - HARDWOOD-W/NOTCH - 1.4"X 86.2" - PORTSMOUTH OAK
7B	M09515-18-T78	EA	MOLDING - HARDWOOD-W/NOTCH - 1.4"X 86.2" - CONCERT CHERRY
7B	M09515-18-T79	EA	MOLDING - HARDWOOD-W/NOTCH - 1.4"X 86.2" - WASHED MAPLE
7B	M09515-18-T80	EA	MOLDING - HARDWOOD-W/NOTCH - 1.4"X 86.2" - SIERRA MAPLE
8B	M09515-52-TG0	EA	MOLDING - TRIM/VEE - 1.5" X 73.9" - PORTSMOUTH OAK
8B	M09515-52-TG1	EA	MOLDING - TRIM/VEE - 1.5" X 73.9" - CONCERT CHERRY
8B	M09515-52-TG2	EA	MOLDING - TRIM/VEE - 1.5" X 73.9" - WASHED MAPLE
8B	M09515-52-TG3	EA	MOLDING - TRIM/VEE - 1.5" X 73.9" - HONEY CHERRY
9B	Y00074-72-438	EA	MOLDING/CROWN - VINYL WRAPPED - PORTSMOUTH OAK - 96" - PORTSMOUTH OAK
9B	Y00074-62-438	EA	MOLDING/CROWN - VINYL WRAPPED - CONCERT CHERRY - 96" - CONCERT CHERRY
9B	Y00074-A2-438	EA	MOLDING/CROWN - VINYL WRAPPED - MAPLE - 96" - WASHED MAPLE
9B	Y00074-92-438	EA	MOLDING/CROWN - VINYL WRAPPED - SIERRA MAPLE - 96" - SIERRA MAPLE
10B	Y00076-42-438	EA	MOLDING/TRIM - .5" X 1" X 96" - OAK (UNSTAINED)
10B	Y00076-32-438	EA	MOLDING/TRIM - .5" X 1" X 96" - CHERRY (UNSTAINED)
10B	Y00076-22-438	EA	MOLDING/TRIM - .5" X 1" X 96" - MAPLE (UNSTAINED)

COPYRIGHT © 2006 WINNEBAGO INDUSTRIES INC.

INTERIOR FINISH GROUP (CONTINUED)

MOLDINGS & TRIMS (CONTINUED)

KEY	PART NUMBER	U/M	DESCRIPTION
11B	Y00086-72-438	EA	MOLDING - VINYL WRAP - .7" X 1.6" X 96" - PORTSMOUTH OAK - PORTSMOUTH OAK
11B	Y00086-62-438	EA	MOLDING - VINYL WRAP - .7" X 1.6" X 96" - CHERRY - CONCERT CHERRY
11B	Y00086-A2-438	EA	MOLDING - VINYL WRAP - .7" X 1.6" X 96" - WASHED MAPLE
11B	Y00086-82-438	EA	MOLDING - VINYL WRAP - .7" X 1.6" X 96" - HONEY CHERRY - HONEY CHERRY
11B	Y00086-92-438	EA	MOLDING - VINYL WRAP - .7" X 1.6" X 96" - SIERRA MAPLE - SIERRA MAPLE
11B	Y00087-72-438	EA	MOLDING - VINYL WRAP - .7" X 2.9" X 96" - PORTSMOUTH OAK
11B	Y00087-62-438	EA	MOLDING - VINYL WRAP - .7" X 2.9" X 96" - CONCERT CHERRY
11B	Y00087-A2-438	EA	MOLDING - VINYL WRAP - .7" X 2.9" X 96" - WASHED MAPLE
11B	Y00087-82-438	EA	MOLDING - VINYL WRAP - .7" X 2.9" X 96" - HONEY CHERRY
11B	Y00087-92-438	EA	MOLDING - VINYL WRAP - .7" X 2.9" X 96" - SIERRA MAPLE
11B	Y00267-72-438	EA	MOLDING - VINYL WRAP/MITERED - .6" X 96" - PORTSMOUTH OAK
11B	Y00267-62-438	EA	MOLDING - VINYL WRAP/MITERED - .6" X 96" - CONCERT CHERRY
11B	Y00267-A2-438	EA	MOLDING - VINYL WRAP/MITERED - .6" X 96" - WASHED MAPLE
11B	Y00267-92-438	EA	MOLDING - VINYL WRAP/MITERED - .6" X 96" - SIERRA MAPLE
11B	Y00300-72-438	EA	MOLDING - VINYL WRAP - .3" X .6" X 96" - PORTSMOUTH OAK
11B	Y00300-62-438	EA	MOLDING - VINYL WRAP - .3" X .6" X 96" - CONCERT CHERRY
11B	Y00300-A2-438	EA	MOLDING - VINYL WRAP - .3" X .6" X 96" - WASHED MAPLE
11B	Y00300-92-438	EA	MOLDING - VINYL WRAP - .3" X .6" X 96" - SIERRA MAPLE

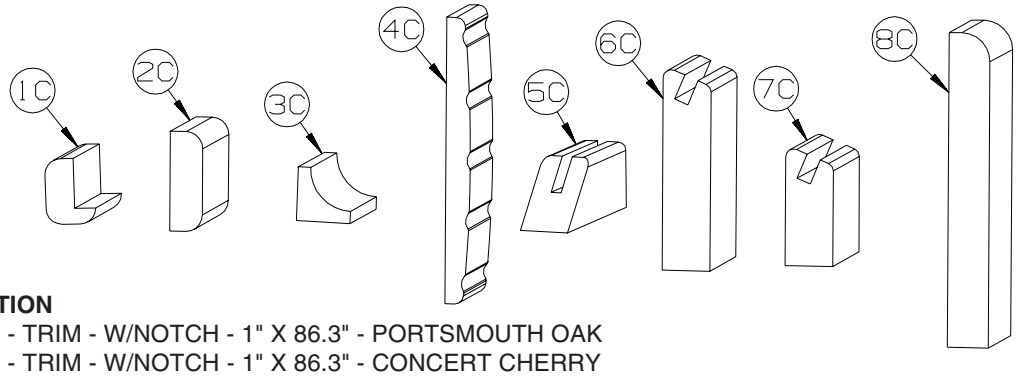

KEY	PART NUMBER	U/M	DESCRIPTION
1C	M09520-19-TD0	EA	MOLDING - TRIM - W/NOTCH - 1" X 86.3" - PORTSMOUTH OAK
1C	M09520-19-TD1	EA	MOLDING - TRIM - W/NOTCH - 1" X 86.3" - CONCERT CHERRY
1C	M09520-19-TD2	EA	MOLDING - TRIM - W/NOTCH - 1" X 86.3" - WASHED MAPLE
1C	M09520-19-TD3	EA	MOLDING - TRIM - W/NOTCH - 1" X 86.3" - HONEY CHERRY
1C	M09525-27-UF1	EA	MOLDING - HARDWOOD - .75" X 1.4" X 32.4" - CONCERT CHERRY
1C	M09525-27-UF2	EA	MOLDING - HARDWOOD - .75" X 1.4" X 32.4" - WASHED MAPLE
1C	M09525-27-UF3	EA	MOLDING - HARDWOOD - .75" X 1.4" X 32.4" - SIERRA MAPLE
2C	M09511-46-T77	EA	MOLDING/TRIM - .5" X 1.5" X 86.5" - PORTSMOUTH OAK
2C	M09511-46-T78	EA	MOLDING/TRIM - .5" X 1.5" X 86.5" - CONCERT CHERRY
2C	M09511-46-T79	EA	MOLDING/TRIM - .5" X 1.5" X 86.5" - WASHED MAPLE
2C	M09511-46-T80	EA	MOLDING/TRIM - .5" X 1.5" X 86.5" - SIERRA MAPLE
3C	M09471-79-R38	EA	MOLDING - TRIM/COVE - .8" X .8" X 96" - PORTSMOUTH OAK
3C	M09471-79-R39	EA	MOLDING - TRIM/COVE - .8" X .8" X 96" - CONCERT CHERRY
3C	M09471-79-R46	EA	MOLDING - TRIM/COVE - .8" X .8" X 96" - WASHED MAPLE
3C	M09471-79-RE0	EA	MOLDING - TRIM/COVE - .8" X .8" X 96" - HONEY CHERRY
3C	M09471-79-SA3	EA	MOLDING - TRIM/COVE - .8" X .8" X 96" - SIERRA MAPLE
4C	M09511-38-T89	EA	MOLDING - TRIM/FLUTED - 5" X 91.8" - PORTSMOUTH OAK
4C	M09511-38-T90	EA	MOLDING - TRIM/FLUTED - 5" X 91.8" - CONCERT CHERRY
4C	M09511-38-T91	EA	MOLDING - TRIM/FLUTED - 5" X 91.8" - WASHED MAPLE
4C	M09511-38-T92	EA	MOLDING - TRIM/FLUTED - 5" X 91.8" - SIERRA MAPLE
5C	Y00223-42-438	EA	MOLDING - HARDWOOD/OAK - .7" X 1" X 96"
5C	Y00223-32-438	EA	MOLDING - HARDWOOD/CHERRY - .7" X 1" X 96"
5C	Y00223-22-438	EA	MOLDING - HARDWOOD/MAPLE - .7" X 1" X 96"
6C	Y00258-72-438	EA	MOLDING/VINYL WRAP-BEVELED-.73" X 3.1" X 96" - PORTSMOUTH OAK
6C	Y00258-62-438	EA	MOLDING/VINYL WRAP-BEVELED-.73" X 3.1" X 96" - CONCERT CHERRY
6C	Y00258-A2-438	EA	MOLDING/VINYL WRAP-BEVELED ENDS-.73"X3.1"X96" - WASHED MAPLE
6C	Y00258-92-438	EA	MOLDING/VINYL WRAP-BEVELED-.73" X 3.1" X 96" - SIERRA MAPLE
7C	Y00259-72-438	EA	MOLDING/VINYL WRAP-BEVELED-.73" X 1.8" X 96" - PORTSMOUTH OAK
7C	Y00259-62-438	EA	MOLDING/VINYL WRAP-BEVELED-.73" X 1.8" X 96" - CONCERT CHERRY
7C	Y00259-A2-438	EA	MOLDING/VINYL WRAP-BEVELED-.73"X1.8"X96" - WASHED MAPLE
7C	Y00259-92-438	EA	MOLDING/VINYL WRAP-BEVELED-.73"X1.8"X96" - SIERRA MAPLE
8C	Y00331-72-438	EA	MOLDING/TRIM - VINYL - .7" X 5.5" X 96" - PORTSMOUTH OAK
8C	Y00331-62-438	EA	MOLDING/TRIM - VINYL - .7" X 5.5" X 96" - CONCERT CHERRY
8C	Y00331-A2-438	EA	MOLDING/TRIM - VINYL - .7" X 5.5" X 96" - WASHED MAPLE
8C	Y00331-92-438	EA	MOLDING/TRIM - VINYL - .7" X 5.5" X 96" - SIERRA MAPLE

COPYRIGHT © 2006 WINNEBAGO INDUSTRIES INC.

INTERIOR FINISH GROUP (CONTINUED)

MOLDINGS & TRIMS (CONTINUED)

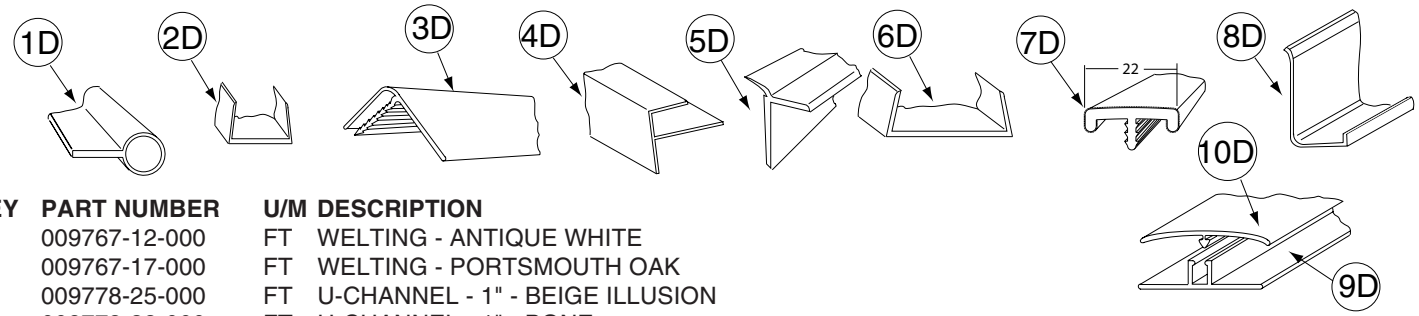

KEY	PART NUMBER	U/M	DESCRIPTION
1D	009767-12-000	FT	WELTING - ANTIQUE WHITE
1D	009767-17-000	FT	WELTING - PORTSMOUTH OAK
2D	009778-25-000	FT	U-CHANNEL - 1" - BEIGE ILLUSION
2D	009778-38-000	FT	U-CHANNEL - 1" - BONE
2D	009778-32-000	FT	U-CHANNEL - 1" - PORTSMOUTH OAK
2D	009778-34-000	FT	U-CHANNEL - 1" - CONCERT CHERRY
2D	009778-27-000	FT	U-CHANNEL - 1" - WASHED MAPLE
2D	009778-35-000	FT	U-CHANNEL - 1" - HONEY CHERRY
2D	009778-36-000	FT	U-CHANNEL - 1" - SIERRA MAPLE
3D	009809-30-000	EA	MOLDING - CORNER - OUTSIDE - 1" X 84" - BEIGE ILLUSION
3D	009809-37-000	EA	MOLDING - CORNER - OUTSIDE - 1" X 84" - BONE
3D	009809-32-000	EA	MOLDING - CORNER - OUTSIDE - 1" X 84" - PORTSMOUTH OAK
3D	009809-33-000	EA	MOLDING - CORNER - OUTSIDE - 1" X 84" - CONCERT CHERRY
3D	009809-31-000	EA	MOLDING - CORNER - OUTSIDE - 1" X 84" - WASHED MAPLE
3D	009809-34-000	EA	MOLDING - CORNER - OUTSIDE - 1" X 84" - HONEY CHERRY
3D	009809-35-000	EA	MOLDING - CORNER - OUTSIDE - 1" X 84" - SIERRA MAPLE
4D	009812-31-000	EA	MOLDING - CORNER - 1/2" W/1/4"CHAN X 84" - BEIGE ILLUSION
4D	009812-40-000	EA	MOLDING - CORNER - 1/2" W/1/4"CHAN X 84" - BONE
4D	009812-35-000	EA	MOLDING - CORNER - 1/2" W/1/4"CHAN X 84" - PORTSMOUTH OAK
4D	009812-36-000	EA	MOLDING - CORNER - 1/2" W/1/4"CHAN X 84" - CONCERT CHERRY
4D	009812-33-000	EA	MOLDING - CORNER - 1/2" W/1/4"CHAN X 84" - WASHED MAPLE
4D	009812-37-000	EA	MOLDING - CORNER - 1/2" W/1/4"CHAN X 84" - HONEY CHERRY
4D	009812-38-000	EA	MOLDING - CORNER - 1/2" W/1/4"CHAN X 84" - SIERRA MAPLE
5D	022992-11-000	FT	MOLDING - REVERSE COVE - T-SHAPED - IVORY
5D	022992-18-000	FT	MOLDING - REVERSE COVE - T-SHAPED - BONE
5D	022992-14-000	FT	MOLDING - REVERSE COVE - T-SHAPED - BRIGHT WHITE
6D	070504-42-000	FT	U-CHANNEL - PLASTIC - .13" X 84" - BEIGE ILLUSION
6D	070504-69-000	FT	U-CHANNEL - PLASTIC - .13" X 84" - BONE
6D	070504-43-000	FT	U-CHANNEL - PLASTIC - .9" X 96" - BEIGE ILLUSION
6D	070504-70-000	FT	U-CHANNEL - PLASTIC - .8" X 84" - BONE
6D	070504-57-000	FT	U-CHANNEL - PLASTIC - .13" X 84" - PORTSMOUTH OAK
6D	070504-58-000	FT	U-CHANNEL - PLASTIC - .9" X 84" - PORTSMOUTH OAK
6D	070504-60-000	FT	U-CHANNEL - PLASTIC - .13" X 84" - CONCERT CHERRY
6D	070504-61-000	FT	U-CHANNEL - PLASTIC - .9" X 84" - CONCERT CHERRY
6D	070504-50-000	FT	U-CHANNEL - PLASTIC - .13" X 96" - WASHED MAPLE
6D	070504-51-000	FT	U-CHANNEL - PLASTIC - .9" X 96" - WASHED MAPLE
6D	070504-62-000	FT	U-CHANNEL - PLASTIC - 1.65" X 84" - HONEY CHERRY
6D	070504-63-000	FT	U-CHANNEL - PLASTIC - .9" X 84" - HONEY CHERRY
6D	070504-65-000	FT	U-CHANNEL - PLASTIC - 1.65" X 84" - SIERRA MAPLE
6D	070504-66-000	FT	U-CHANNEL - PLASTIC - .9" X 84" - SIERRA MAPLE
7D	083620-15-000	FT	MOLDING-T - W/EDGE LIP - 7/8" FACE - BEIGE ILLUSION
7D	083620-25-000	FT	MOLDING-T - W/EDGE LIP - 7/8" FACE - BONE
7D	083620-20-000	FT	MOLDING-T - W/EDGE LIP - 7/8" FACE - PORTSMOUTH OAK
7D	083620-21-000	FT	MOLDING-T - W/EDGE LIP - 7/8" FACE - CONCERT CHERRY/HONEY CHERRY
7D	083620-19-000	FT	MOLDING-T - W/EDGE LIP - 7/8" FACE - WASHED MAPLE
7D	083620-22-000	FT	MOLDING-T - W/EDGE LIP - 7/8" FACE - SIERRA MAPLE
8D	085746-04-000	FT	TRIM-J - CARPET 1.2" X .5" ANGLE - 12' LONG - OFF WHITE
9D	086229-01-000	EA	RETAINER - BATTEN - .75" X 92.1" - ANY COLOR
10D	086229-20-000	EA	BATTEN - 1" X 96" - BEIGE

COPYRIGHT © 2006 WINNEBAGO INDUSTRIES INC.

INTERIOR FINISH GROUP (CONTINUED)

MOLDINGS & TRIMS (CONTINUED)

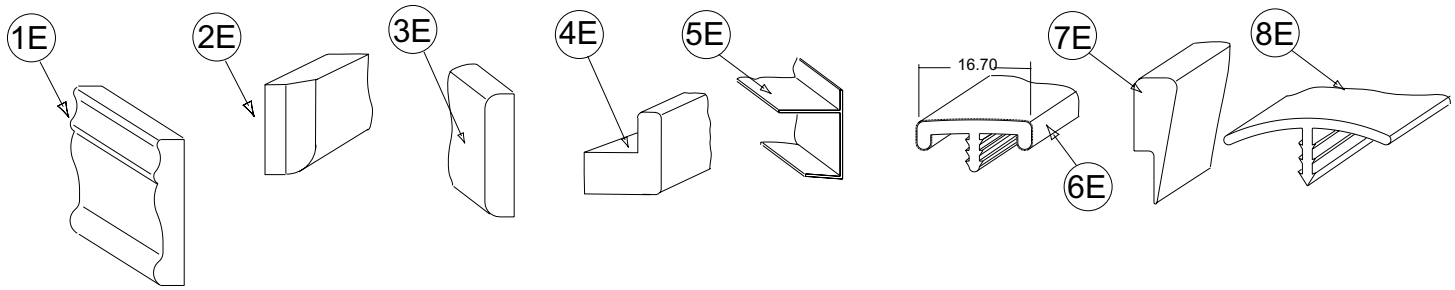

KEY	PART NUMBER	U/M	DESCRIPTION
1E	100182-10-N47	EA	TRIM/WOOD - CHAIR RAIL - 2.5" X 8' - PORTSMOUTH OAK
1E	100182-10-P85	EA	TRIM/WOOD - CHAIR RAIL - 2.5" X 8' - CONCERT CHERRY
1E	100182-10-J70	EA	TRIM/WOOD - CHAIR RAIL - 2.5" X 8' - WASHED MAPLE
1E	100182-10-RA3	EA	TRIM/WOOD - CHAIR RAIL - 2.5" X 8' - HONEY CHERRY
1E	100182-10-S67	EA	TRIM/WOOD - CHAIR RAIL - 2.5" X 8' - SIERRA MAPLE
2E	100659-30-N75	EA	MOLDING - TRIM - 8' - PORTSMOUTH OAK
2E	100659-30-N74	EA	MOLDING - TRIM - 8' - CONCERT CHERRY
2E	100659-30-M84	EA	MOLDING - TRIM - 8' - WASHED MAPLE
2E	100659-27-RA3	EA	MOLDING - TRIM - HONEY CHERRY
2E	100659-31-SA3	EA	MOLDING - TRIM - SIERRA MAPLE
3E	100818-01-12A	EA	MOLDING - VINYL WRAPPED - 1.6" X .4" X 84" - PORTSMOUTH OAK
3E	100818-01-13A	EA	MOLDING - VINYL WRAPPED - 1.6" X .4" X 84" - CONCERT CHERRY
3E	100818-01-21A	EA	MOLDING - VINYL WRAPPED - 1.6" X .4" X 84" - WASHED MAPLE
3E	100818-01-14A	EA	MOLDING - VINYL WRAPPED - 1.6" X .4" X 84" - HONEY CHERRY
3E	100818-01-22A	EA	MOLDING - VINYL WRAPPED - 1.6" X .4" X 84" - SIERRA MAPLE
4E	100819-01-12A	EA	MOLDING - VINYL WRAPPED-L-SHAPED-1.5"X1.5"X84" - PORTSMOUTH OAK
4E	100819-01-13A	EA	MOLDING - VINYL WRAPPED-L-SHAPED-1.5"X1.5"X84" - CONCERT CHERRY
4E	100819-01-21A	EA	MOLDING - VINYL WRAPPED-L-SHAPED-1.5"X1.5"X84" - WASHED MAPLE
4E	100819-01-14A	EA	MOLDING - VINYL WRAPPED-L-SHAPED-1.5"X1.5"X84" - HONEY CHERRY
4E	100819-01-22A	EA	MOLDING - VINYL WRAPPED-L-SHAPED-1.5"X1.5"X84" - SIERRA MAPLE
5E	103186-01-07A	FT	MOLDING/PLASTIC - 3/8" U-CHANNEL-3/4" FACE -BEIGE ILLUSION
5E	103186-01-09A	FT	MOLDING/PLASTIC - 3/8" U-CHAN'L-3/4" FACE - PORTSMOUTH OAK
5E	103186-01-10A	FT	MOLDING/PLASTIC - 3/8" U-CHAN'L-3/4" FACE - CONCERT CHERRY
5E	103186-01-08A	FT	MOLDING/PLASTIC - 3/8" U-CHANNEL-3/4"FACE-WASHED MAPLE 8' - WASHED MAPLE
5E	103186-01-11A	FT	MOLDING/PLASTIC - 3/8" U-CHAN'L-3/4" FACE - HONEY CHERRY
5E	103186-01-12A	FT	MOLDING/PLASTIC - 3/8" U-CHAN'L-3/4" FACE - SIERRA MAPLE
5E	103186-02-07A	FT	MOLDING/PLASTIC-1" U-CHAN'L-1 3/8" FACE - BEIGE ILLUSION
5E	103186-02-09A	FT	MOLDING/PLASTIC - 1" U-CHAN'L-1 3/8" FACE - PORTSMOUTH OAK
5E	103186-02-10A	FT	MOLDING/PLASTIC - 1" U-CHAN'L-1 3/8" FACE - CONCERT CHERRY
5E	103186-02-08A	FT	MOLDING/PLASTIC - 1" U-CHANNEL-1 3/8"FACE - WASHED MAPLE
5E	103186-02-11A	FT	MOLDING/PLASTIC - 1" U-CHAN'L-1 3/8" FACE - HONEY CHERRY
5E	103186-02-12A	FT	MOLDING/PLASTIC - 1" U-CHAN'L-1 3/8" FACE - SIERRA MAPLE
6E	104676-02-08A	FT	MOLDING-T - W/EDGE LIP - 11/16" FACE - PORTSMOUTH OAK
6E	104676-02-09A	FT	MOLDING-T - W/EDGE LIP - 11/16" FACE - CONCERT CHERRY
6E	104676-02-06A	FT	MOLDING-T - W/EDGE LIP - 11/16" FACE - WASHED MAPLE
6E	104676-02-10A	FT	MOLDING-T - W/EDGE LIP - 11/16" FACE - HONEY CHERRY
6E	104676-02-12A	FT	MOLDING-T - W/EDGE LIP - 11/16" FACE - SIERRA MAPLE
6E	105004-01-12A	EA	MOLDING - VINYL WRAPPED - 1" X 96" - PORTSMOUTH OAK
6E	105004-01-13A	EA	MOLDING - VINYL WRAPPED 1" X 8' - CONCERT CHERRY
6E	105004-01-21A	EA	MOLDING - VINYL WRAPPED - 1" X 8' - WASHED MAPLE
6E	105004-01-22A	EA	MOLDING - VINYL WRAPPED - 1" X 8' - SIERRA MAPLE
8E	105709-02-000	FT	MOLDING-T - W/EDGE LIP 3/4" FACE - BEIGE ILLUSION

COPYRIGHT © 2006 WINNEBAGO INDUSTRIES INC.

INTERIOR FINISH GROUP (CONTINUED)

MOLDINGS & TRIMS (CONTINUED)

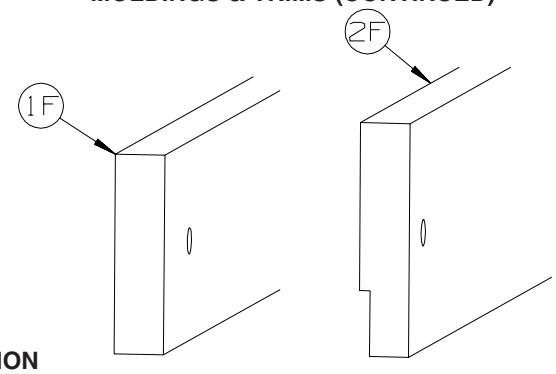

KEY	PART NUMBER	U/M	DESCRIPTION
1F	116951-45-R68	EA	MOLDING - TRIM - 3" X 30.3" - PORTSMOUTH OAK
1F	116951-45-R69	EA	MOLDING - TRIM - 3" X 30.3" - CONCERT CHERRY
1F	116951-45-R76	EA	MOLDING - TRIM - 3" X 30.3" - WASHED MAPLE
1F	116951-45-SA3	EA	MOLDING - TRIM - 3" X 30.3" - SIERRA MAPLE
2F	116951-37-R68	EA	MOLDING - TRIM - 3.5" X 38.6" - PORTSMOUTH OAK
2F	116951-37-R69	EA	MOLDING - TRIM - 3.5" X 38.6" - CONCERT CHERRY
2F	116951-37-R76	EA	MOLDING - TRIM - 3.5" X 38.6" - WASHED MAPLE
2F	116951-37-SA3	EA	MOLDING - TRIM - 3.5" X 38.6" - SIERRA MAPLE
2F	116951-51-SA0	EA	MOLDING - TRIM - 3.5" X 47.3" - PORTSMOUTH OAK
2F	116951-51-SA1	EA	MOLDING - TRIM - 3.5" X 47.3" - CONCERT CHERRY
2F	116951-51-SA2	EA	MOLDING - TRIM - 3.5" X 47.3" - WASHED MAPLE
2F	116951-51-SA3	EA	MOLDING - TRIM - 3.5" X 47.3" - SIERRA MAPLE
2F	116951-55-TD0	EA	MOLDING - TRIM - 4.5" X 52.3" - PORTSMOUTH OAK
2F	116951-55-TD1	EA	MOLDING - TRIM - 4.5" X 52.3" - CONCERT CHERRY
2F	116951-55-TD2	EA	MOLDING - TRIM - 4.5" X 52.3" - WASHED MAPLE
2F	116951-55-TD3	EA	MOLDING - TRIM - 4.5" X 52.3" - SIERRA MAPLE
2F	116951-56-TD0	EA	MOLDING - TRIM - 4.5" X 52.3" - PORTSMOUTH OAK
2F	116951-56-TD1	EA	MOLDING - TRIM - 4.5" X 52.3" - CONCERT CHERRY
2F	116951-56-TD2	EA	MOLDING - TRIM - 4.5" X 52.3" - WASHED MAPLE
2F	116951-56-TD3	EA	MOLDING - TRIM - 4.5" X 52.3" - SIERRA MAPLE

COPYRIGHT © 2006 WINNEBAGO INDUSTRIES INC.

INTERIOR FINISH GROUP (CONTINUED)

MOLDINGS & TRIMS (CONTINUED)

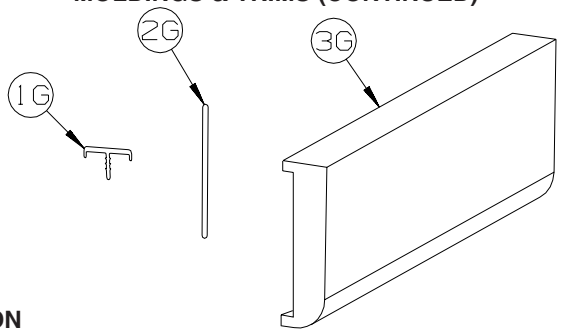

KEY	PART NUMBER	U/M	DESCRIPTION
1G	119520-01-01A	FT	MOLDING-T - OFFSET W/EDGE LIP - 1.3" FACE - OFF WHITE
1G	119520-01-04A	FT	MOLDING-T - OFFSET W/EDGE LIP - 1.3" FACE - PORTSMOUTH OAK
1G	119520-01-02A	FT	MOLDING-T - OFFSET W/EDGE LIP - 1.3" FACE - CONCERT CHERRY
1G	119520-01-03A	FT	MOLDING-T - OFFSET W/EDGE LIP - 1.3" FACE - WASHED MAPLE
1G	119520-01-05A	FT	MOLDING-T - OFFSET W/EDGE LIP - 1.3" FACE - SIERRA MAPLE
1G	119520-03-03A	FT	MOLDING-T - OFFSET W/EDGE LIP - 1" FACE - WASHED MAPLE
1G	119520-03-06A	FT	MOLDING-T - OFFSET W/EDGE LIP - 1" FACE - HONEY CHERRY
2G	127842-01-01A	FT	SEAL - SIGHT SHIELD - 2" BLACK
	137885-A2-438	EA	LUMBER - VINYL WRAPPED - .7" X .75" X 96" - CONCERT CHERRY
	137885-D2-438	EA	LUMBER - VINYL WRAPPED - .7" X 1.5" X 96" - CONCERT CHERRY
	137885-E2-438	EA	LUMBER - VINYL WRAPPED - .7" X 2" X 96" - CONCERT CHERRY
	137885-F2-438	EA	LUMBER - VINYL WRAPPED - .7" X 2.5" X 96" - CONCERT CHERRY
	137885-G2-438	EA	LUMBER - VINYL WRAPPED - .7" X 3" X 96" - CONCERT CHERRY
	137885-H2-438	EA	LUMBER - VINYL WRAPPED - .7" X 3.5" X 96" - CONCERT CHERRY
	137885-J2-438	EA	LUMBER - VINYL WRAPPED - .7" X 5.5" X 96" - CONCERT CHERRY
	137885-J2-743	EA	LUMBER - VINYL WRAPPED - .7" X 5.5" X 108" - CONCERT CHERRY
	137885-K2-438	EA	LUMBER - VINYL WRAPPED - .7" X 3.9" X 96" - CONCERT CHERRY
	137885-R2-438	EA	LUMBER - VINYL WRAPPED - .7" X 3" X 96" - CONCERT CHERRY
3G	137887-D2-134	EA	MOLDING - VINYL WRAPPED - .7" X 1.6" X 84" - CONCERT CHERRY
3G	137887-D2-743	EA	MOLDING - VINYL WRAPPED - .7" X 1.6" X 108" - CONCERT CHERRY
3G	137887-F2-134	EA	MOLDING - VINYL WRAPPED - .7" X 2.5" X 84" - CONCERT CHERRY
3G	137887-F2-743	EA	MOLDING - VINYL WRAPPED - .7" X 2.5" X 108" - CONCERT CHERRY
3G	137887-F2-438	EA	MOLDING - VINYL WRAPPED - .7" X 2.5" X 96" - CONCERT CHERRY
	137894-A2-438	EA	LUMBER - VINYL WRAPPED - .7" X .75" X 96" - PORTSMOUTH OAK
	137894-D2-438	EA	LUMBER - VINYL WRAPPED - .7" X 1.5" X 96" - PORTSMOUTH OAK
	137894-E2-438	EA	LUMBER - VINYL WRAPPED - .7" X 2" X 96" - PORTSMOUTH OAK
	137894-F2-438	EA	LUMBER - VINYL WRAPPED - .7" X 2.5" X 96" - PORTSMOUTH OAK
	137894-G2-438	EA	LUMBER - VINYL WRAPPED - .7" X 3" X 96" - PORTSMOUTH OAK
	137894-H2-438	EA	LUMBER - VINYL WRAPPED - .7" X 3.5" X 96" - PORTSMOUTH OAK
	137894-J2-438	EA	LUMBER - VINYL WRAPPED - .7" X 5.5" X 96" - PORTSMOUTH OAK
	137894-J2-743	EA	LUMBER - VINYL WRAPPED - .7" X 5.5" X 96" - PORTSMOUTH OAK
	137894-K2-438	EA	LUMBER - VINYL WRAPPED - .7" X 3.9" X 96" - PORTSMOUTH OAK
	137894-R2-438	EA	LUMBER - VINYL WRAPPED - .7" X 3" X 96" - PORTSMOUTH OAK
3G	137895-D2-134	EA	MOLDING - VINYL WRAPPED - .7" X 1.6" X 84"-PORTSMOUTH OAK
3G	137895-D2-743	EA	MOLDING - VINYL WRAPPED - .7" X 1.6" X 108"-PORTSMOUTH OAK
3G	137895-F2-438	EA	MOLDING - VINYL WRAPPED - .7" X 2.5" X 96" - PORTSMOUTH OAK
3G	137895-F2-743	EA	MOLDING - VINYL WRAPPED - .7" X 2.5" X 108" - PORTSMOUTH OAK
	146419-A2-438	EA	LUMBER - VINYL WRAPPED - .7" X .75" X 96" - HONEY CHERRY
	146419-D2-438	EA	LUMBER - VINYL WRAPPED - .7" X 1.5" X 96" - HONEY CHERRY
	146419-E2-438	EA	LUMBER - VINYL WRAPPED - .7" X 2" X 96" - HONEY CHERRY
	146419-F2-438	EA	LUMBER - VINYL WRAPPED - .7" X 2.5" X 96" - HONEY CHERRY
	146419-G2-438	EA	LUMBER - VINYL WRAPPED - .7" X 3" X 96" - HONEY CHERRY
	146419-H2-438	EA	LUMBER - VINYL WRAPPED - .7" X 3.5" X 96" - HONEY CHERRY
	146419-J2-438	EA	LUMBER - VINYL WRAPPED - .7" X 5.5" X 96" - HONEY CHERRY
	146419-J2-743	EA	LUMBER - VINYL WRAPPED - .7" X 5.5" X 108" - HONEY CHERRY
	146419-K2-438	EA	LUMBER - VINYL WRAPPED - .7" X 3.9" X 96" - HONEY CHERRY
	146419-R2-438	EA	LUMBER - VINYL WRAPPED - .7" X 3" X 96" - HONEY CHERRY
3G	146425-D2-134	EA	MOLDING - VINYL WRAPPED - .7" X 1.6" X 83.9" - HONEY CHERRY
3G	146425-F2-438	EA	MOLDING - VINYL WRAPPED - .7" X 2.6" X 96" - HONEY CHERRY

COPYRIGHT © 2006 WINNEBAGO INDUSTRIES INC.

INTERIOR FINISH GROUP (CONTINUED)

MOLDINGS & TRIMS (CONTINUED)

KEY	PART NUMBER	U/M	DESCRIPTION
	149325-A2-438	EA	LUMBER - VINYL WRAPPED - .7" X .75" X 96" - WASHED MAPLE
	149325-D2-438	EA	LUMBER - VINYL WRAPPED - .7" X 1.5" X 96" - WASHED MAPLE
	149325-E2-438	EA	LUMBER - VINYL WRAPPED - .7" X 2" X 96" - WASHED MAPLE
	149325-F2-438	EA	LUMBER - VINYL WRAPPED - .7" X 2.5" X 96" - WASHED MAPLE
	149325-G2-438	EA	LUMBER - VINYL WRAPPED - .7" X 3" X 96" - WASHED MAPLE
	149325-H2-438	EA	LUMBER - VINYL WRAPPED - .7" X 3.5" X 96" - WASHED MAPLE
	149325-J2-438	EA	LUMBER - VINYL WRAPPED - .7" X 5.5" X 96" - WASHED MAPLE
	149325-J2-743	EA	LUMBER - VINYL WRAPPED - .7" X 5.5" X 108" - WASHED MAPLE
	149325-K2-438	EA	LUMBER - VINYL WRAPPED - .7" X 3.9" X 96" - WASHED MAPLE
	149325-R2-438	EA	LUMBER - VINYL WRAPPED - .7" X 3" X 96" - WASHED MAPLE
3G	149326-D2-134	EA	MOLDING - VINYL WRAPPED - .7" X 1.5" X 83.9" - WASHED MAPLE
3G	149326-D2-743	EA	MOLDING - VINYL WRAPPED - .7" X 1.5" X 108" - WASHED MAPLE
3G	149326-F2-134	EA	MOLDING - VINYL WRAPPED - .7" X 2.5" X 83.9" - WASHED MAPLE
3G	149326-F2-438	EA	MOLDING - VINYL WRAPPED - .7" X 2.5" X 96" - WASHED MAPLE
3G	149326-F2-743	EA	MOLDING - VINYL WRAPPED - .7" X 2.5" X 108" - WASHED MAPLE
	149330-A2-438	EA	LUMBER - VINYL WRAPPED - .7" X .75" X 96" - SIERRA MAPLE
	149330-D2-438	EA	LUMBER - VINYL WRAPPED - .7" X 1.5" X 96" - SIERRA MAPLE
	149330-E2-438	EA	LUMBER - VINYL WRAPPED - .7" X 2" X 96" - SIERRA MAPLE
	149330-F2-438	EA	LUMBER - VINYL WRAPPED - .7" X 2.5" X 96" - SIERRA MAPLE
	149330-G2-438	EA	LUMBER - VINYL WRAPPED - .7" X 3" X 96" - SIERRA MAPLE
	149330-H2-438	EA	LUMBER - VINYL WRAPPED - .7" X 3.5" X 96" - SIERRA MAPLE
	149330-J2-438	EA	LUMBER - VINYL WRAPPED - .7" X 5.5" X 96" - SIERRA MAPLE
	149330-J2-743	EA	LUMBER - VINYL WRAPPED - .7" X 5.5" X 108" - SIERRA MAPLE
	149330-K2-438	EA	LUMBER - VINYL WRAPPED - .7" X 3.9" X 96" - SIERRA MAPLE
	149330-R2-438	EA	LUMBER - VINYL WRAPPED - .7" X 3" X 96" - SIERRA MAPLE
3G	149331-D2-134	EA	MOLDING - VINYL WRAPPED - .7" X 1.5" X 83.9" - SIERRA MAPLE
3G	149331-D2-743	EA	MOLDING - VINYL WRAP - .7" X 1.5" X 108" - SIERRA MAPLE
3G	149331-F2-134	EA	MOLDING - VINYL WRAPPED - .7" X 2.5" X 83.9" - SIERRA MAPLE
3G	149331-F2-438	EA	MOLDING - VINYL WRAPPED - .7" X 2.5" X 96" - SIERRA MAPLE
3G	149331-F2-743	EA	MOLDING - VINYL WRAPPED - .7" X 2.5" X 108" - SIERRA MAPLE

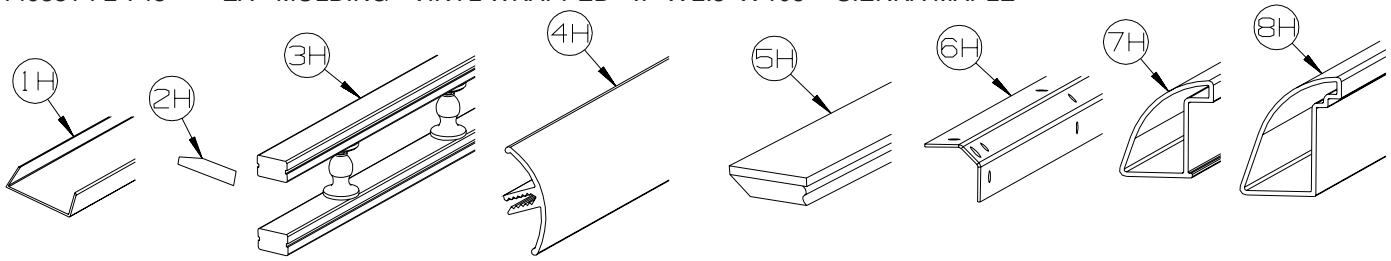

KEY	PART NUMBER	U/M	DESCRIPTION
1H	141260-01-01A	FT	U-CHANNEL - 1" - VILLAGE OAK - PORTSMOUTH OAK/WASHED MAPLE/SIERRA MAPLE
1H	141260-01-02A	FT	U-CHANNEL - 1" - GRADY BROWN - CONCERT CHERRY/HONEY CHERRY
1H	141260-02-01A	FT	U-CHANNEL - 1 1/8" - VILLAGE OAK - PORTSMOUTH OAK/WASHED MAPLE/SIERRA MAPLE
1H	141260-02-02A	FT	U-CHANNEL - 1 1/8" - GRADY BROWN - CONCERT CHERRY/HONEY CHERRY
2H	146306-01-01A	FT	TRANSITION - CARPET/TILE
3H	150167-01-07A	EA	RAIL - DECORATIVE - 96" W/O REVERSE SIDE GROOVE - PORTSMOUTH OAK
3H	150167-01-02A	EA	RAIL - DECORATIVE - 96" W/O REVERSE SIDE GROOVE - SALEM CHERRY - CONCERT CHERRY
3H	150167-01-03A	EA	RAIL - DECORATIVE - 96" W/O REVERSE SIDE GROOVE - WASHED MAPLE
3H	150167-01-09A	EA	RAIL - DECORATIVE - 96" W/O REVERSE SIDE GROOVE - SIERRA MAPLE
4H	151653-10-01A	EA	TRIM/RADIUS - CABINET CORNER - 79.6" - HAMMER TONE SILVER
4H	151653-10-02A	EA	TRIM/RADIUS - CABINET CORNER - 79.6" - DULL METALLIC
5H	151676-26-S46	EA	MOLDING/TRIM - .75" X 1.6" X 80.2" - PORTSMOUTH OAK
5H	151676-26-S47	EA	MOLDING/TRIM - .75" X 1.6" X 80.2" - CONCERT CHERRY
5H	151676-26-S48	EA	MOLDING/TRIM - .75" X 1.6" X 80.2" - WASHED MAPLE
5H	151676-26-SR0	EA	MOLDING/TRIM - .75" X 1.6" X 80.2" - SIERRA MAPLE
6H	151861-05-02B	EA	ANGLE - SUPPORT/CORNER - 1.4" X 78.6" - E-COATED
7H	151893-01-01A	EA	TRIM/RADIUS - CABINET BOTTOM - 72.6" - HAMMER TONE SILVER
7H	151893-01-02A	EA	TRIM/RADIUS - CABINET BOTTOM - 72.6" - DULL METALLIC
8H	152077-01-01A	EA	TRIM/RADIUS - CABINET BOTTOM - 27.7" - HAMMER TONE SILVER
8H	152077-01-02A	EA	TRIM/RADIUS - CABINET BOTTOM - 27.7" - DULL METALLIC

COPYRIGHT © 2006 WINNEBAGO INDUSTRIES INC.

INTERIOR FINISH GROUP (CONTINUED)

PANELING & LAMINATES

KEY	PART NUMBER	U/M	DESCRIPTION
	000885-A5-000	SF	PARTICLE BOARD - 3/8" X 4' X 8' - WHITE PEB EMB - 1 SIDED FROM: 00-00-00 THRU: 05-15-05
	000885-C3-000	SF	PARTICLE BOARD - 3/8" X 4' X 8' - WHITE THATCH EMB-1 SIDED FROM: 05-16-05 THRU: 99-99-99
	000885-B4-000	SF	PARTICLE BOARD - 3/8" X 4' X 8'- WASHED MAPLE - 2 SIDED - WASHED MAPLE
	000885-B5-000	SF	PARTICLE BOARD - 3/8" X 4' X 8'- WASHED MAPLE - 1 SIDED - WASHED MAPLE
	000885-B6-000	SF	PARTICLE BOARD - 3/4" X 4' X 8'- WASHED MAPLE - 2 SIDED - WASHED MAPLE
	000885-B7-000	SF	PARTICLE BOARD - 1/2" X 4' X 8'- WASHED MAPLE - 2 SIDED - WASHED MAPLE
	000885-B0-000	SF	PARTICLE BOARD - 3/8" X 4' X 8'- SIERRA MAPLE - 2 SIDED - SIERRA MAPLE
	000885-B1-000	SF	PARTICLE BOARD - 3/8" X 4' X 8'- SIERRA MAPLE - 1 SIDED - SIERRA MAPLE
	000885-B2-000	SF	PARTICLE BOARD - 3/4" X 4' X 8'- SIERRA MAPLE - 2 SIDED - SIERRA MAPLE
	000885-B3-000	SF	PARTICLE BOARD - 1/2" X 4' X 8'- SIERRA MAPLE - 2 SIDED - SIERRA MAPLE
	074497-48-000	SF	PANELING - SIERRA MAPLE - 1/8" X 4' X 8' - SIERRA MAPLE
	074497-49-000	SF	PANELING - WASHED MAPLE - 1/8" X 4' X 8' - WASHED MAPLE
	076773-20-000	SF	PANELING - 2 SIDED/WASHED MAPLE - 1/8" X 4' X 8' - WASHED MAPLE
	076773-19-000	SF	PANELING - 2 SIDED/SIERRA MAPLE - 1/8" X 4' X 8' - SIERRA MAPLE
	088272-H9-000	SF	PANELING - PEBBLE EMBOSSED - WHITE - 4' X 8' FROM: 00-00-00 THRU: 05-15-05
	088272-M9-000	SF	PANELING - WHITE THATCHED - 4' X 8' FROM: 05-16-05 THRU: 99-99-99
	088272-M1-000	SF	PANELING - MORITZ/TUSCANY - 4' X 7.4' (T47, T48)
	088272-K7-000	SF	PANELING - STONE - 4' X 7' (T49, T50)
	088272-M0-000	SF	PANELING - SISAL/CHICORY - 4' X 7.4' (T51, T52)
	074498-A3-000	SF	LAMINATE - PLASTIC - BRONZE LEGACY - 5' X 8' (T47, T48)
	074498-A5-000	SF	LAMINATE - PLASTIC - CINDER GRAY - 5' X 8' (T49, T50, T51, T52)
	074498-B6-000	SF	LAMINATE - PLASTIC - SATIN OXIDE - 5’ X 8’
	076325-39-000	FT	MOLDING - EDGEBAND - 1 5/16" X .030" - ALMOND
	076325-40-000	FT	MOLDING - EDGEBAND - .93" X .024" - ALMOND
	076325-81-000	FT	MOLDING - EDGEBAND - 1 5/16" X .30" - NEAT/WASHED MAPLE - WASHED MAPLE
	076325-83-000	FT	MOLDING - EDGEBAND - .93" X .024" - SIERRA MAPLE - SIERRA MAPLE
	085284-K1-000	FT	BATT TAPE - ADHESIVE BACKED - DECORATIVE - MORITZ/TUSCANY (T47, T48)
	085284-H0-000	FT	BATT TAPE - ADHESIVE BACKED - DECORATIVE - STONE (T49, T50)
	085284-K0-000	FT	BATT TAPE - ADHESIVE BACKED - DECORATIVE - SISAL/CHICORY (T51, T52)
	085284-J5-000	FT	BATT TAPE - ADHESIVE BACKED - DECORATIVE-NEAT/WASHED MAPLE - WASHED MAPLE
	085284-J4-000	FT	BATT TAPE - ADHESIVE BACKED - DECORATIVE-SIERRA MAPLE - SIERRA MAPLE
	085284-F9-000	FT	BATT TAPE - ADHESIVE BACKED - PEBBLE EMBOSSED FROM: 00-00-00 THRU: 05-15-05
	085284-K9-000	FT	BATT TAPE - ADHESIVE BACKED - DECORATIVE - WHITE THATCHED FROM: 05-16-05 THRU: 99-99-99
	088263-J7-000	EA	BATT STRIP - DECORATIVE - MORITZ/TUSCANY (T47, T48)
	088263-H6-000	EA	BATT STRIP - DECORATIVE - STONE (T49, T50)
	088263-J6-000	EA	BATT STRIP - DECORATIVE - SISAL/CHICORY (T51, T52)
	088263-J2-000	EA	BATT STRIP - DECORATIVE - NEAT/WASHED MAPLE - WASHED MAPLE
	088263-J1-000	EA	BATT STRIP - DECORATIVE - SIERRA MAPLE - SIERRA MAPLE
	126339-01-000	SF	BOARD - WHEAT - 60" X 72"

COPYRIGHT © 2006 WINNEBAGO INDUSTRIES INC.

INTERIOR FINISH GROUP (CONTINUED)

INTERIOR TRIM LAYOUT

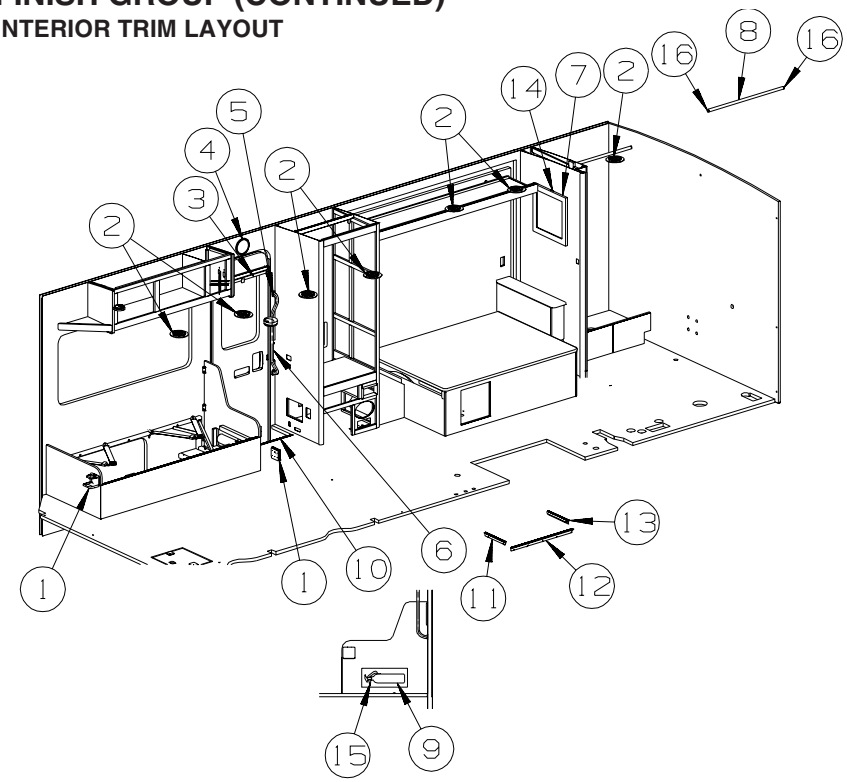

KEY	PART NUMBER	U/M	DESCRIPTION
1	118718-01-01A	EA	HOLDER/DRINK - COLLAPSIBLE MUG - BLACK PLASTIC
2	120134-01-02A	EA	REGISTER - W/DAMPER - 4" PIPE/6.4" O.D. FACE - WHITE
3	144628-03-01A	EA	SHADE - SCREEN DOOR - 20.1" X 33.4" - BRIGHT WHITE
4	142368-03-01A	EA	CLOCK - 6" - SATIN NICKEL
5	137605-04-01A	EA	HAND RAIL - INTERIOR ENTRY DOOR - BLACK
6	152933-01-01A	EA	COVER - BRACKET - STRIKE - BRIGHT WHITE
7	131493-08-01A	EA	PICTURE - DECORATIVE - 14" X 14" - SCABISOSA (T47, T48, T49, T50)
7	131493-08-03A	EA	PICTURE - DECORATIVE - 14" X 14" - WHITE DAISY (T51, T52)
8	102075-06-02A	EA	ROD - SHOWER CURTAIN - 1" OD X 33.5" - SOFT WHITE
9*	094499-02-000	EA	EXTINGUISHER/FIRE - DRY - 10BC - W/GAUGE - CANADIAN
9	094499-03-000	EA	EXTINGUISHER/FIRE - DRY - 10BC - W/GAUGE/BRACKET
10	139955-22-02A	EA	TRIM - STEP/ENTRY - 27.7" - TITANIUM
11	139955-11-01A	EA	TRIM - COMPARTMENT/ENTRY - 11.7" - MILL
12	139955-12-01A	EA	TRIM - STEP/ENTRY - 28.2" - MILL
13	139955-02-01A	EA	TRIM - COMPARTMENT/ENTRY - 11.7" - MILL
14	130120-01-01A	EA	BRACKET/MOUNTING - MIRROR
15	094499-04-000	EA	STRAP - FIRE EXTINGUISHER MOUNTING - METAL
16	081114-02-000	EA	CAP - INSERT/ROUND - 1" DIAMETER - WHITE PLASTIC

***COMPONENT PARTS LISTED LATER IN THIS GROUP**

COPYRIGHT © 2006 WINNEBAGO INDUSTRIES INC.

INTERIOR FINISH GROUP (CONTINUED)

INTERIOR TRIM LAYOUT (CONTINUED)

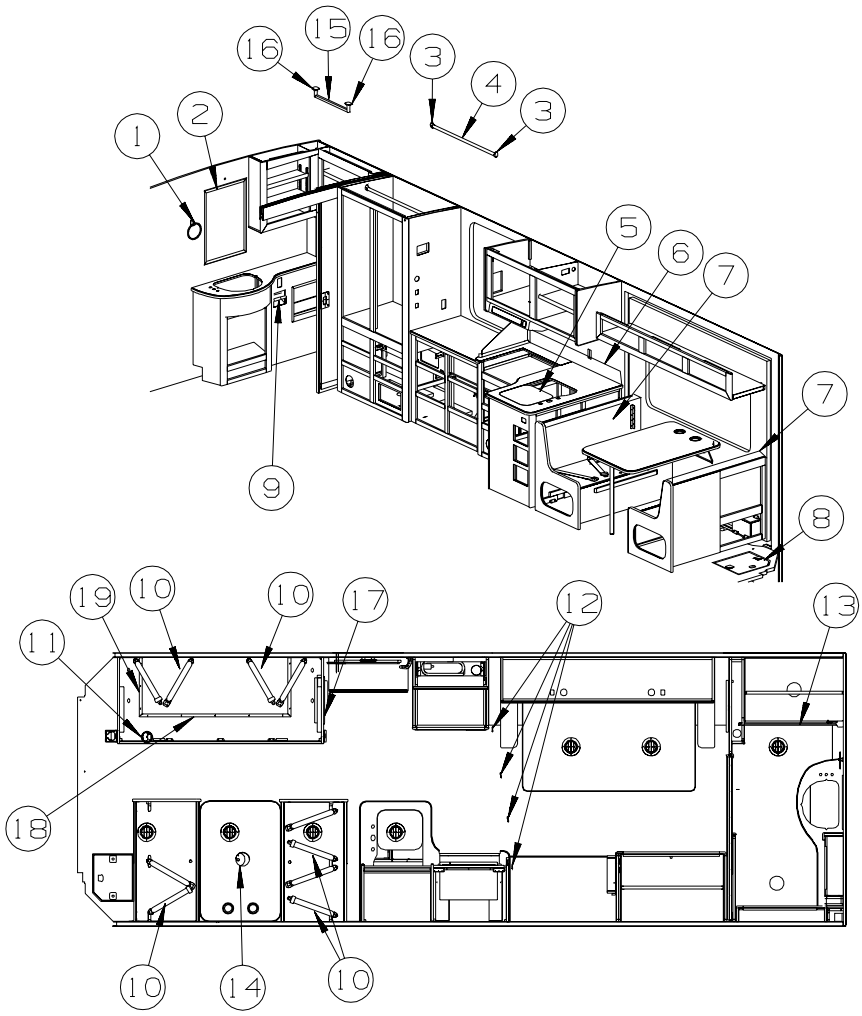

KEY	PART NUMBER	U/M	DESCRIPTION
1	145980-06-03A	EA	TOWEL RING - CHROME
2	140374-51-000	EA	MIRROR - SAFETY GLASS - 19.2" X 26.5"
3	152301-01-01A	EA	FLANGE - PLASTIC - 1" CLOTHES ROD HOLDER - WHITE
4	Y00136-21-218	EA	DOWEL - WOOD - CLOTHES ROD - 1"DIAMETER X 4'
5	103610-04-S34	EA	COVER - SINK - 15.7" X 13.8" - BRONZE LEGACY (T47, T48)
5	103610-04-S38	EA	COVER - SINK - 15.7" X 13.8" - CINDER GRAY (T49, T50, T51, T52)
6	132610-05-32A	FT	WALLPAPER - BORDER - 7" - SELF-ADHESIVE (T47, T48)
6	132610-05-40A	FT	WALLPAPER - BORDER - 7" - SELF-ADHESIVE (T49, T50)
6	132610-05-24A	FT	WALLPAPER - BORDER - 7" - SELF-ADHESIVE (T51, T52)
7	111338-11-T41	EA	PAD - DINETTE SEATBACK (T47, T48)
7	111338-11-T43	EA	PAD - DINETTE SEATBACK (T49, T50, T51, T52)
8	148046-01-S36	EA	LID - COMPARTMENT - BATTERY (T47, T48)
8	148046-01-T49	EA	LID - COMPARTMENT - BATTERY (T49, T50)
8	148046-01-S38	EA	LID - COMPARTMENT - BATTERY (T51, T52)
9	145980-02-02A	EA	HOLDER - TOILET TISSUE - RECESSED - NICKEL
10	007021-01-000	EA	SEAT BELT - 2" X 90" - BLACK
11	072852-01-000	EA	DETECTOR - SMOKE - W/9 VOLT BATTERY - US
11	072852-02-000	EA	DETECTOR - SMOKE - W/9 VOLT BATTERY - CANADIAN
	077956-01-000	EA	WARNING/SMOKE DETECTOR
12	127960-01-01A	EA	RETAINER - EYE - 3/8" - STAINLESS STEEL
13	151578-01-01A	EA	DOOR - SHOWER - 36.3" X 61.9" - WHT OPAQUE SCREEN/SILVER FROM: 00-00-00 THRU: 02-05-06
13	151578-01-02A	EA	DOOR - SHOWER - 36.3" X 61.9" - WHT OPAQUE SCREEN/WHITE FROM: 02-06-06 THRU: 99-99-99
	149607-06-02B	EA	GUIDE - F/POCKET DOOR - 1.8" BENT ROD - E-COATED
14	125136-02-000	EA	DETECTOR/CO - GAS MODEL - 9 VOLT
15	145980-05-02A	EA	TOWEL BAR - 18" - CHROME
16	145980-04-02A	EA	TOWEL BAR - POST - PAIR - CHROME
17	157481-03-01A	EA	TRIM - COMPARTMENT/ENTRY - 20.2" - MILL
18	157481-01-01A	EA	TRIM - COMPARTMENT/ENTRY - 52.2" - MILL
19	157481-02-01A	EA	TRIM - COMPARTMENT/ENTRY - 20.3" - MILL

COPYRIGHT © 2006 WINNEBAGO INDUSTRIES INC.

INTERIOR FINISH GROUP (CONTINUED)

COMPONENT PART FOR INTERIOR TRIM LAYOUT

094499-02-000

KEY	PART NUMBER	U/M	DESCRIPTION	VENDOR NO
	094499-01-700	EA	BRACKET MTG. W/PLAS. STRAP	294039

FLOOR COVERINGS

KEY	PART NUMBER	U/M	DESCRIPTION
	042720-33-000	SY	VINYL - FLOOR COVERING - DIAMOND
	075233-01-000	SY	PAD - CARPET - 3/8" X 6' ROLL
	089275-02-000	FT	STRIP - 3/4" X 84" BLACK POLYETHYLENE
	093486-01-000	SY	CARPET - COMPARTMENT - 72" WIDE - DARK GRAY
	096060-H1-000	SY	CARPET - 4 SQUARE YARD INCREMENTS - TAPIOCA (T47, T48) FROM: 00-00-00 THRU: 01-23-05
	152251-06-01A	SY	CARPET - 4 SQUARE YARD INCREMENTS - WHEAT (T47, T48) FROM: 01-24-05 THRU: 99-99-99
	152251-05-06A	SY	CARPET - 4 SQUARE YARD INCREMENTS - CAST IRON (T49, T50)
	152251-05-02A	SY	CARPET - 4 SQUARE YARD INCREMENTS - BURLWOOD (T51, T52)

COPYRIGHT © 2006 WINNEBAGO INDUSTRIES INC.

INTERIOR FINISH GROUP (CONTINUED)

HARDWARE

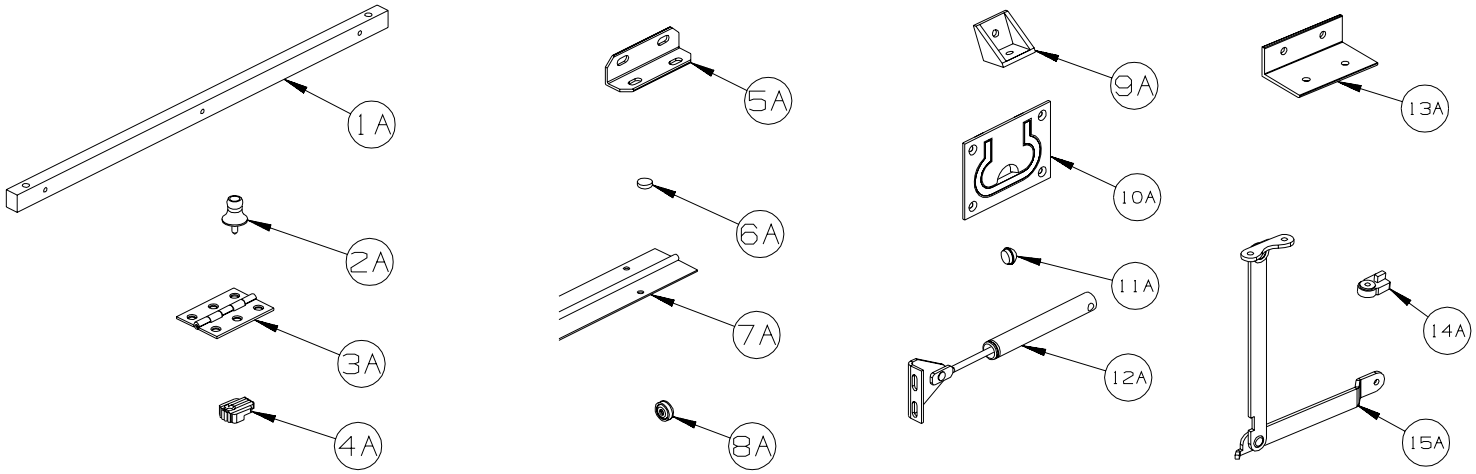

KEY	PART NUMBER	U/M	DESCRIPTION
1A	P34509-01-N01	EA	RAIL END - RH/LH - TOWEL RACK - PORTSMOUTH
1A	P34509-01-P14	EA	RAIL END - RH/LH - TOWEL RACK - CONCERT CHERRY
1A	P34509-01-J70	EA	RAIL END - RH/LH - TOWEL RACK - WASHED MAPLE
1A	P34509-01-RE0	EA	RAIL END - RH/LH - TOWEL RACK - HONEY CHERRY
1A	P34509-01-SA3	EA	RAIL END - RH/LH - TOWEL RACK - SIERRA MAPLE
2A	009013-01-000	EA	CATCH - BULLDOG - MALE/FEMALE
3A	009059-01-000	EA	HINGE - DOOR - 2" X 1.4" - BRASS
3A	009059-02-000	EA	HINGE - DOOR - 2" X 2.7" - BRASS
3A	009059-03-000	EA	HINGE - BRASS - 1.75"
3A	009059-04-000	EA	HINGE - 2” - ZINC
4A	009089-01-000	EA	CLIP - MIRROR
5A	016604-01-000	EA	BRACE - ANGLE - 2 1/2" - UNPAINTED METAL
5A	016604-05-000	EA	BRACE - ANGLE - 2 1/2" - OFF WHITE METAL
5A	016604-10-000	EA	BRACE - SEAT ANGLE - 2.5" - BLACK
6A	023320-01-000	EA	PAD - FELT 3/8" DIAMETER
7A	041389-19-000	EA	HINGE - PIANO - 1 1/2" X 71.9" - UNPAINTED
7A	041389-25-000	EA	HINGE - PIANO - 1 1/2" X 55" - UNPAINTED
7A	041389-32-000	EA	HINGE - PIANO - 68" - OFF WHITE
8A	057671-01-000	EA	COVER - SCREW - #8 - OFF WHITE
8A	057671-15-000	EA	COVER - SCREW - #8 - BRIGHT WHITE
8A	057671-16-000	EA	COVER - SCREW - #8 - SOFT WHITE
8A	057671-18-000	EA	COVER - SCREW - #8 - OFF WHITE
9A	065740-01-000	EA	BRACE - CABINET/CORNER - PLASTIC
10A	072871-01-000	EA	PULL - FLUSH - CHROME
11A	074045-13-000	EA	PLUG - OAK - 3/8" DOWEL-1/2" HEAD - PORTSMOUTH OAK
11A	074045-08-000	EA	PLUG - OAK - 3/8" DOWEL-1/2" HEAD - CONCERT CHERRY
11A	074045-12-000	EA	PLUG - OAK - 3/8" DOWEL-1/2" HEAD - WASHED MAPLE
11A	074045-14-000	EA	PLUG - OAK - 3/8" DOWEL-1/2" HEAD - HONEY CHERRY
11A	074045-15-000	EA	PLUG - OAK - 3/8" DOWEL-1/2" HEAD - SIERRA MAPLE
12A	074493-02-000	EA	SUPPORT - PISTON SPRING - CABINET DOOR - 26 LBS
12A	074493-03-000	EA	SUPPORT - PISTON SPRING - CABINET DOOR - 12 LBS
12A	074493-04-000	EA	SUPPORT - PISTON SPRING - CABINET DOOR - 32LBS
13A	083125-07-000	EA	BRACE - ANGLE/COUCH - 2.5" - OFF WHITE
13A	156732-01-02A	EA	BRACE - ANGLE/COUCH - 2.5" - OFF WHITE
14A	083204-03-000	EA	BUTTON - RETAINING MIRROR 5/16" TIP
15A	084412-01-000	EA	SUPPORT/HINGE KIT (LEFT & RIGHT HINGES)

COPYRIGHT © 2006 WINNEBAGO INDUSTRIES INC.

INTERIOR FINISH GROUP (CONTINUED)

HARDWARE (CONTINUED)

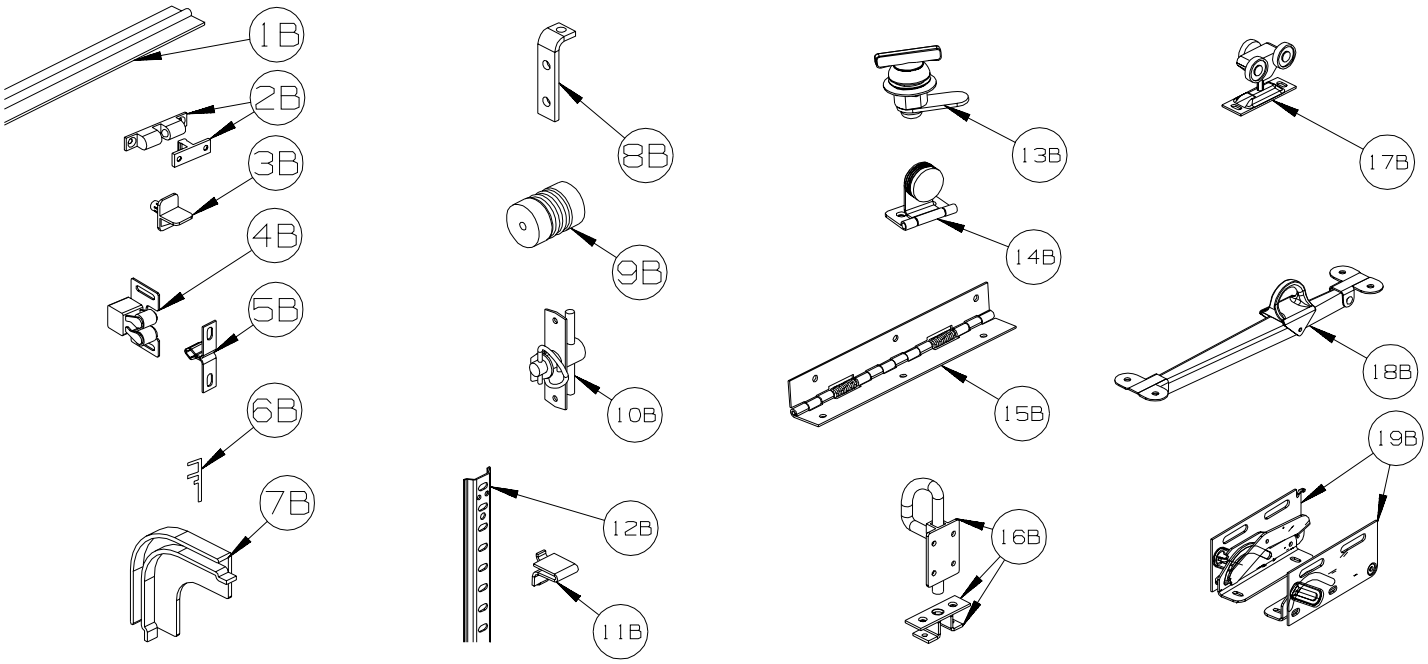

KEY	PART NUMBER	U/M	DESCRIPTION
1B	084413-01-000	EA	HINGE - 1" X 72" - ALUMINUM - W/HOLES
1B	134099-01-02A	EA	HINGE - PIANO - WRAP AROUND - 15.7" - NICKEL PLATED
2B	084451-01-000	EA	CATCH & LATCH - 1.7" - BRASS
3B	092907-01-000	EA	SUPPORT - SHELF - PIN - 1/4" - CLEAR PLASTIC
4B	093586-03-000	EA	CATCH - SPRING ROLLER - .377"
4B	093586-06-000	EA	CATCH - SPRING ROLLER - .236"
5B	093586-04-000	EA	STRIKE - SPRING STEEL - 1.14"
5B	093586-05-000	EA	STRIKE - SPRING STEEL - .943"
6B	093622-01-000	EA	TRACK - DOOR - TAMBOUR - PLASTIC - 8' LENGTHS
7B	093623-01-000	EA	CORNER - TRACK - TAMBOUR DOOR
8B	096826-01-01A	EA	BRACE-CABINET E-COATED
9B	097872-04-000	EA	DOWEL - WOOD - 1" DIAMETER X 1.38" LONG - UNFINISHED
10B	098196-01-000	EA	LATCH - 1/4 TURN - T-BAR
11B	098979-01-000	EA	CLIP - ADJUSTABLE SHELF
12B	098980-01-000	EA	PILASTER - ADJUSTABLE SHELF - 18"
12B	098980-02-000	EA	PILASTER - ADJUSTABLE SHELF - 12"
12B	098980-03-000	EA	PILASTER - ADJUSTABLE SHELF - 9"
12B	098980-04-000	EA	PILASTER - ADJUSTABLE SHELF - 48"
12B	098980-05-000	EA	PILASTER - ADJUSTABLE SHELF - 15"
12B	098980-06-000	EA	PILASTER - ADJUSTABLE SHELF - 24"
13B	100710-01-02A	EA	LOCK - GLASS DOOR/TWIST TYPE - NICKEL
14B	100711-01-02A	EA	HINGE - GLASS DOOR - NICKEL
15B	102920-01-01A	EA	HINGE - SPRING LOADED - BRASS
15B	102920-01-02A	EA	HINGE - SPRING LOADED - NICKEL
15B	129753-01-01A	EA	HINGE - SPRING LOADED - 19" X 19" - BLACK
16B	103256-01-000	EA	LATCH COMPLETE (SLIDE)
17B	103874-01-000	EA	HANGER - SLIDING DOOR
18B	104181-01-01A	EA	SUPPORT - LEAF 5.3" EXTENDS TO 7.5" - SAFETY RING - METAL
19B	108126-01-000	EA	TRAY HINGE SET (QTY. 2 PER SET)

COPYRIGHT © 2006 WINNEBAGO INDUSTRIES INC.

INTERIOR FINISH GROUP (CONTINUED)

HARDWARE (CONTINUED)

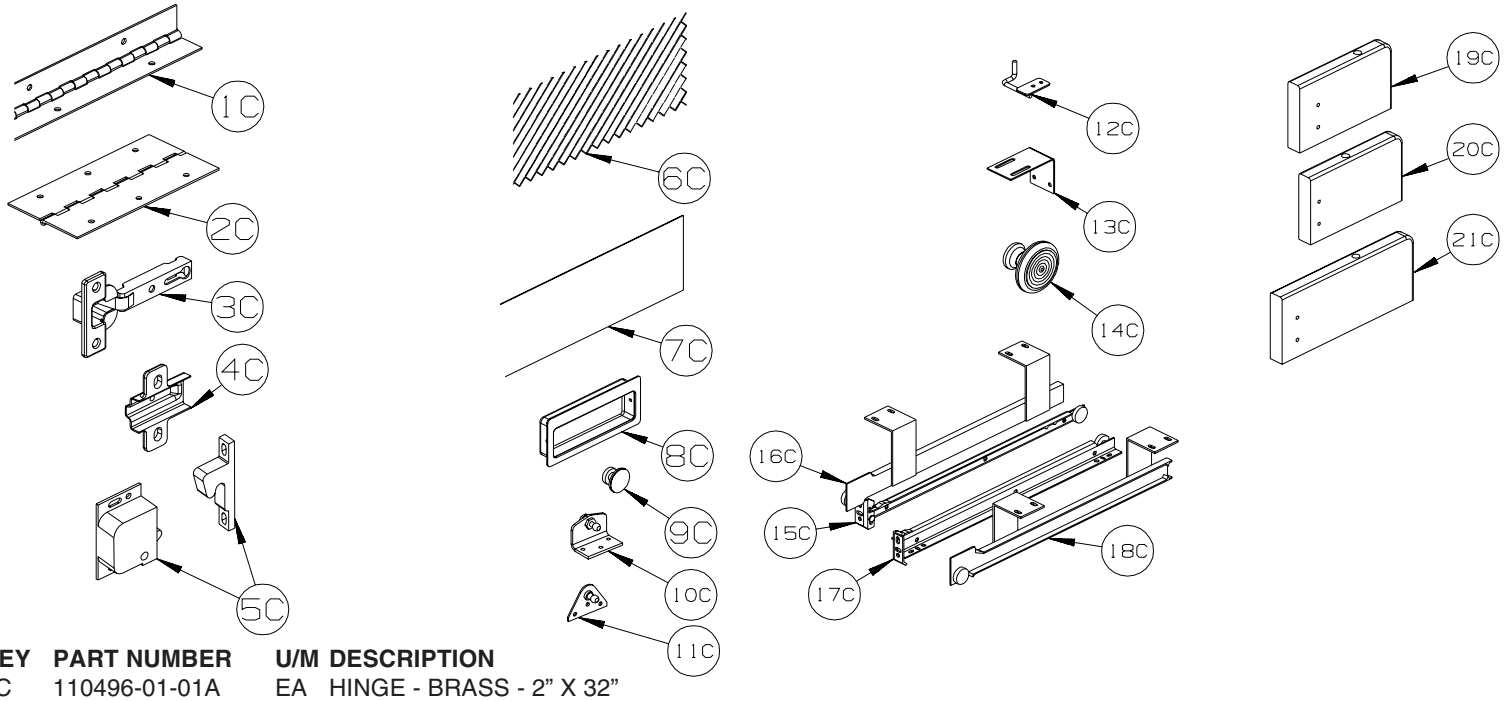

KEY	PART NUMBER	U/M	DESCRIPTION
1C	110496-01-01A	EA	HINGE - BRASS - 2” X 32”
1C	110496-01-02A	EA	HINGE - NICKEL - 2” X 32”
1C	110496-05-02A	EA	HINGE - NICKEL - 2" X 11.5"
2C	114278-02-000	EA	HINGE - CONTINUOUS - 3" WIDE
3C	114443-02-01A	EA	HINGE - CABINET DOOR - W/O CLIP - SILVER
4C	114443-03-01A	EA	CLIP - HINGE/CABINET DOOR - SILVER
5C	117095-01-01A	EA	LATCH - DOOR - GRABBER W/KEEPER - PLASTIC - BLK-5 LB PULL
5C	117095-02-01A	EA	LATCH - DOOR - GRABBER W/KEEPER - PLASTIC - BLK-10 LB PULL
5C	117095-03-01A	EA	LATCH - DOOR - GRABBER W/KEEPER - PLASTIC - BLK-15 LB PULL
6C	118200-01-01A	SF	MESH - PLASTIC 1/2" - 48" X LENGTH = SF - BLACK
7C	122717-06-01A	FT	PAD - NON-SKID - PSA - 5"W
8C	124311-01-01A	EA	HANDLE - RECESSED - BRASS
9C	125221-01-01A	EA	PULL - MIRROR - W/ROUND HANDLE
10C	126263-06-02B	EA	BRACKET - GAS SPRING W/INSIDE BALL STUD - E-COATED
	057460-02-000	EA	BALL STUD - F/GAS SPRING .39” - 5/16” -18
11C	126263-05-02B	EA	BRACKET - GAS SPRING W/BALL STUD - E-COATED
	057460-02-000	EA	BALL STUD - F/GAS SPRING .39” - 5/16” -18
11C	126263-08-02B	EA	BRACKET - GAS SPRING W/CENTERED BALL STUD - E-COATED
11C	126263-19-02B	EA	BRACKET - GAS SPRING W/BALL STUD - E-COATED
12C	130798-01-02B	EA	GUIDE - POCKET DOOR - E-COATED
13C	132871-02-02B	EA	BRACKET/L-ANGLE W/HOLES - 1.9" X 2.8" - E-COATED
14C	133313-01-03A	EA	PULL - DOOR/DWR - CHROME/BRASS - SPIRIT 300 SERIES, SUNDANCER AND SUNRISE
15C	136944-01-01A	EA	SLIDE - DRAWER/RIGHT HAND - 13.8"
16C	136944-02-01A	EA	SLIDE - CABINET/RIGHT HAND - 13.8"
17C	136944-03-01A	EA	SLIDE - DRAWER/LEFT HAND - 13.8"
18C	136944-04-01A	EA	SLIDE - CABINET/LEFT HAND - 13.8"
19C	137445-01-N42	EA	STOP - F/SLIDING DOOR - PORTSMOUTH OAK
19C	137445-01-P46	EA	STOP - F/SLIDING DOOR - CONCERT CHERRY
19C	137445-01-P56	EA	STOP - F/SLIDING DOOR - WASHED MAPLE
19C	137445-01-S67	EA	STOP - F/SLIDING DOOR - SIERRA MAPLE
20C	137445-02-P45	EA	STOP - F/SLIDING DOOR - PORTSMOUTH OAK
20C	137445-02-P46	EA	STOP - F/SLIDING DOOR - CONCERT CHERRY
20C	137445-02-P56	EA	STOP - F/SLIDING DOOR - WASHED MAPLE
20C	137445-02-S67	EA	STOP - F/SLIDING DOOR - SIERRA MAPLE
21C	137445-03-T77	EA	STOP - F/SLIDING DOOR - PORTSMOUTH OAK
21C	137445-03-T78	EA	STOP - F/SLIDING DOOR - CONCERT CHERRY
21C	137445-03-T79	EA	STOP - F/SLIDING DOOR - WASHED MAPLE
21C	137445-03-T80	EA	STOP - F/SLIDING DOOR - SIERRA MAPLE

COPYRIGHT © 2006 WINNEBAGO INDUSTRIES INC.

INTERIOR FINISH GROUP (CONTINUED)

HARDWARE (CONTINUED)

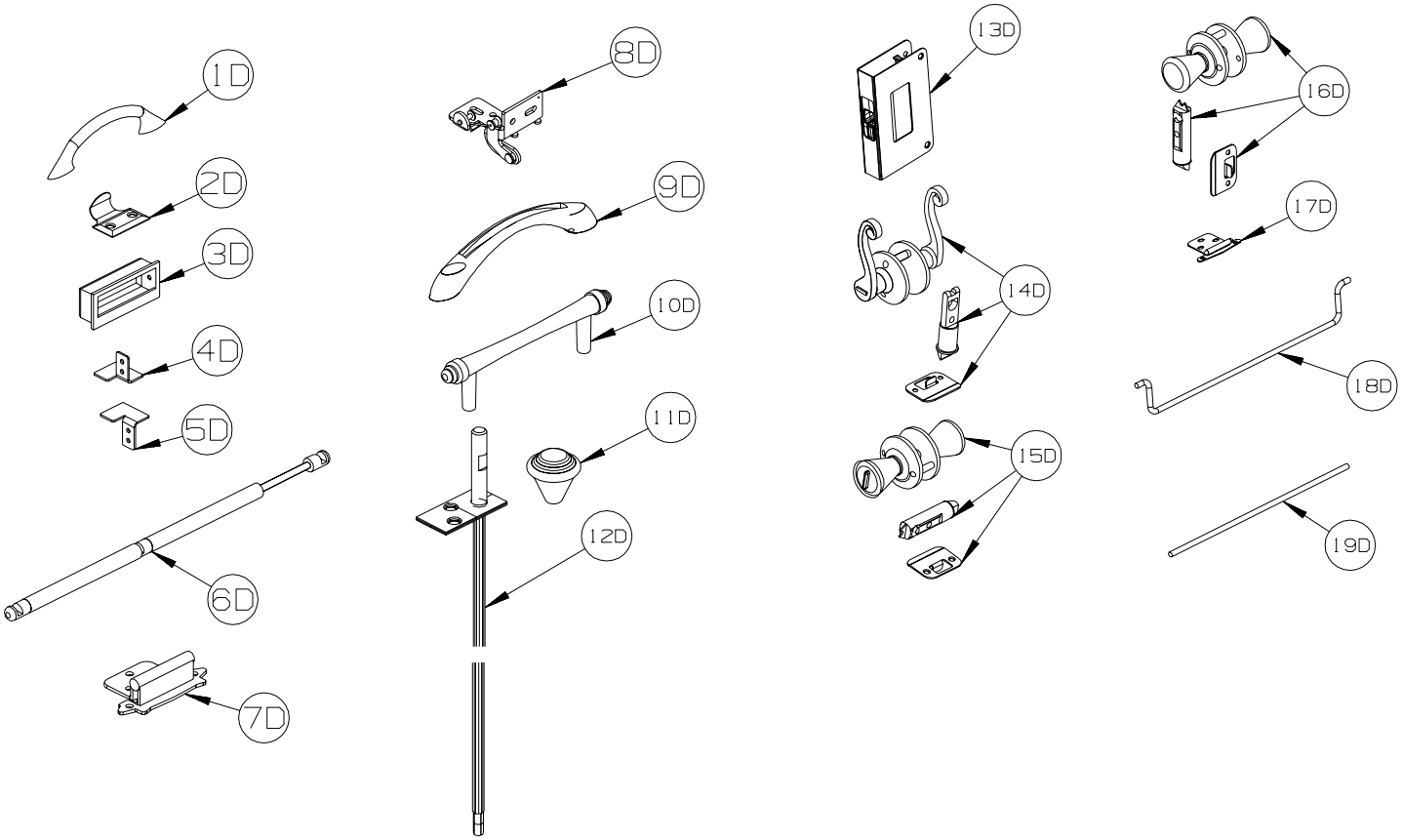

KEY	PART NUMBER	U/M	DESCRIPTION
1D	137446-01-01A	EA	PULL - CABINET - CHROME/BRASS - SPIRIT 300 SERIES, SUNOVA D-SERIES
2D	137463-01-01A	EA	LIFT - HOOK - SATIN BRASS
2D	137463-01-02A	EA	LIFT - HOOK - PEWTER
3D	139136-01-02A	EA	HANDLE - .75” RECESSED - PEWTER
3D	139136-02-01A	EA	HANDLE - .35” RECESSED - BRASS
3D	139136-02-02A	EA	HANDLE - .35” RECESSED - PEWTER
4D	139264-01-02B	EA	STOP - DOOR - TAMBOUR/RH HAND - E-COATED
5D	139264-02-02B	EA	STOP - DOOR - TAMBOUR/LH HAND - E-COATED
6D	142569-07-000	EA	SPRING/GAS - 20 LB - 20" EXTENDED/12" COMPRESSED
6D	142569-15-000	EA	SPRING/GAS - 120 LB - 20" EXTENDED/12" COMPRESSED
6D	142569-16-000	EA	SPRING/GAS - 90 LB - 20" EXTENDED/12" COMPRESSED
6D	142569-29-000	EA	SPRING/GAS - 20 LB - 9.9" EXTENDED/5.9" COMPRESSED
7D	143468-02-03A	EA	HINGE - SELF CLOSING - SATIN NICKEL
8D	144488-01-02A	EA	HINGE - CABINET - NICKEL
9D	144917-01-01A	EA	PULL - DRAWER - SATIN NICKEL - TOUR R-SERIES
10D	145172-01-02A	EA	PULL - CABINET DOOR - CHROME - ADVENTURER G-SERIES, JOURNEY P-SERIES
11D	145172-02-02A	EA	KNOB - CABINET DOOR - CHROME - ADVENTURER G-SERIES, JOURNEY P-SERIES
12D	145939-03-01A	EA	ROD/LATCH - AISLE DOOR - BRASS
13D	145939-04-02A	EA	LATCH/SLIDE - AISLE DOOR(1" THICK DOOR)-NICKEL/BLACK SLIDE
14D	146064-01-01A	EA	LOCK/PRIVACY (LOCKING) LEVER STYLE - POLISHED BRASS
14D	146064-01-02A	EA	LOCK/PRIVACY (LOCKING) LEVER STYLE - SATIN PEWTER
15D	146064-05-01A	EA	LOCK/PRIVACY (LOCKING) KNOB STYLE - SATIN NICKEL
16D	146064-06-01A	EA	LOCK/PASSAGE (NON LOCKING) KNOB STYLE - SATIN NICKEL
17D	146553-01-01A	EA	HINGE - CABINET DOOR - BURNISHED BRASS
17D	146553-01-03A	EA	HINGE - CABINET DOOR - SATIN NICKEL
18D	146801-01-01A	EA	ROD/TOWEL BAR (OFFSET) - BRASS
18D	146801-01-02A	EA	ROD/TOWEL BAR (OFFSET) - PEWTER
19D	146840-03-02A	EA	ROD - .25" X 11.7" - PEWTER
19D	146840-04-02A	EA	ROD - .25" X 13.1" - PEWTER
19D	146840-05-02A	EA	ROD - .25" X 14.8" - PEWTER
19D	146840-07-02A	EA	ROD - .25" X 4.2" - PEWTER

COPYRIGHT © 2006 WINNEBAGO INDUSTRIES INC.

INTERIOR FINISH GROUP (CONTINUED)

HARDWARE (CONTINUED)

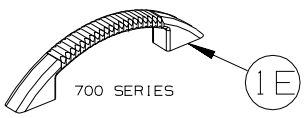

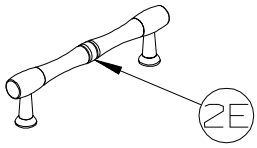

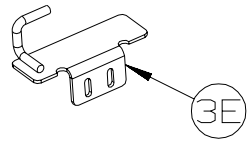

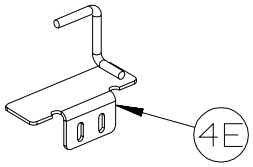

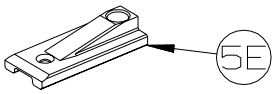

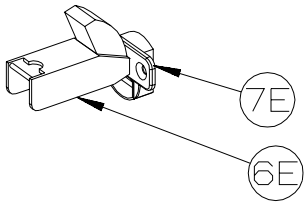

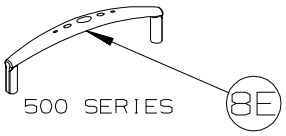

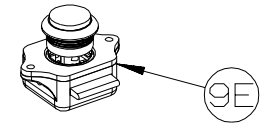

500 SERIES

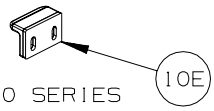

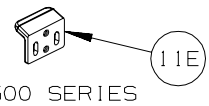

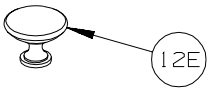

400-SERIES
WINNEBAGO 300-SERIES
WINNEBAGO R-SERIES

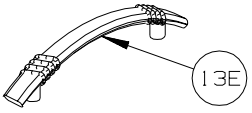

WINNEBAGO 400-SERIES
WINNEBAGO F-SERIES

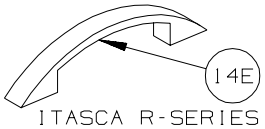

ITASCA R-SERIES
WINNEBAGO S-SERIES

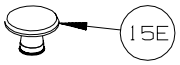

ITASCA R-SERIES
WINNEBAGO S-SERIES

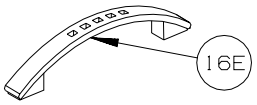

ITASCA 400-SERIES
ITASCA F-SERIES

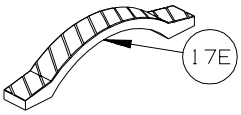

ITASCA G-SERIES
ITASCA P-SERIES

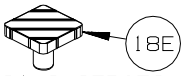

ITASCA G-SERIES
ITASCA P-SERIES

KEY	PART NUMBER	U/M	DESCRIPTION
1E	148816-01-01A	EA	PULL - CABINET DOOR - POLISHED BRASS - 331K ONLY
1E	148816-01-02A	EA	PULL - CABINET DOOR - NICKEL - ASPECT, CAMBRIA 700-SERIES
2E	149090-01-02A	EA	PULL - CABINET DOOR - NICKEL - OUTLOOK 300-SERIES, SIGHTSEER D-SERIES
3E	149607-01-02B	EA	GUIDE - F/POCKET DOOR - 1.6” BENT ROD - E-COATED
3E	149607-03-02B	EA	GUIDE - F/POCKET DOOR - 2.9” BENT ROD - E-COATED
4E	149607-04-02B	EA	GUIDE - F/POCKET DOOR - E-COATED
5E	150983-01-01A	EA	STRIKE/BLOCK - WEDGE STYLE - F/SLIDE DOOR - 3" X 1.2" - BLACK
6E	151305-01-01A	EA	HINGE - CONCEALED/SELF CLOSING - BRASS
7E	151305-02-01A	EA	PLATE/MOUNTING - F/HINGE - WHITE
8E	151372-01-01A	EA	PULL - DOOR/DRAWER - NICKLE - VIEW & NAVION 500-SERIES
9E	151380-01-01A	EA	LATCH - CABINET DOOR - PUSH BUTTON - VIEW & NAVION 500-SERIES
10E	151380-02-01A	EA	STRIKE - CABINET DOOR - VIEW & NAVION 500-SERIES
11E	151380-03-01A	EA	STRIKE - CABINET DOOR - VIEW & NAVION 500-SERIES
12E	152080-01-01A	EA	PULL-NICKEL - OUTLOOK 300-SERIES, MINNIE WINNIE, SUNDANCER 400-SERIES, TOUR R-SERIES
13E	152302-01-01A	EA	PULL - CABINET DOOR - SATIN NICKEL - MINNIE WINNIE 400-SERIES, VOYAGE F-SERIES
14E	152304-01-01A	EA	PULL - CABINET DOOR - BRONZE- ELLIPSE R-SERIES
14E	152304-01-02A	EA	PULL - CABINET DOOR - SATIN NICKEL - VECTRA S-SERIES
15E	152305-01-01A	EA	KNOB - DOOR/DRAWER - BRONZE - ELLIPSE R-SERIES
15E	152305-01-02A	EA	KNOB - DOOR/DRAWER - SATIN NICKEL- VECTRA S-SERIES
16E	152950-01-01A	EA	PULL - DOOR/DRAWER - BRUSHED NICKEL - SUNDANCER 400-SERIES, SUNRISE F-SERIES
17E	152951-01-01A	EA	PULL - DOOR/DRAWER - PEWTER - SUNCRUISER G-SERIES, MERIDIAN P-SERIES
18E	152952-01-01A	EA	PULL - KNOB/DRAWER - PEWTER - SUNCRUISER G-SERIES, MERIDIAN P-SERIES

COPYRIGHT © 2006 WINNEBAGO INDUSTRIES INC.

INTERIOR FINISH GROUP (CONTINUED)

HARDWARE (CONTINUED)

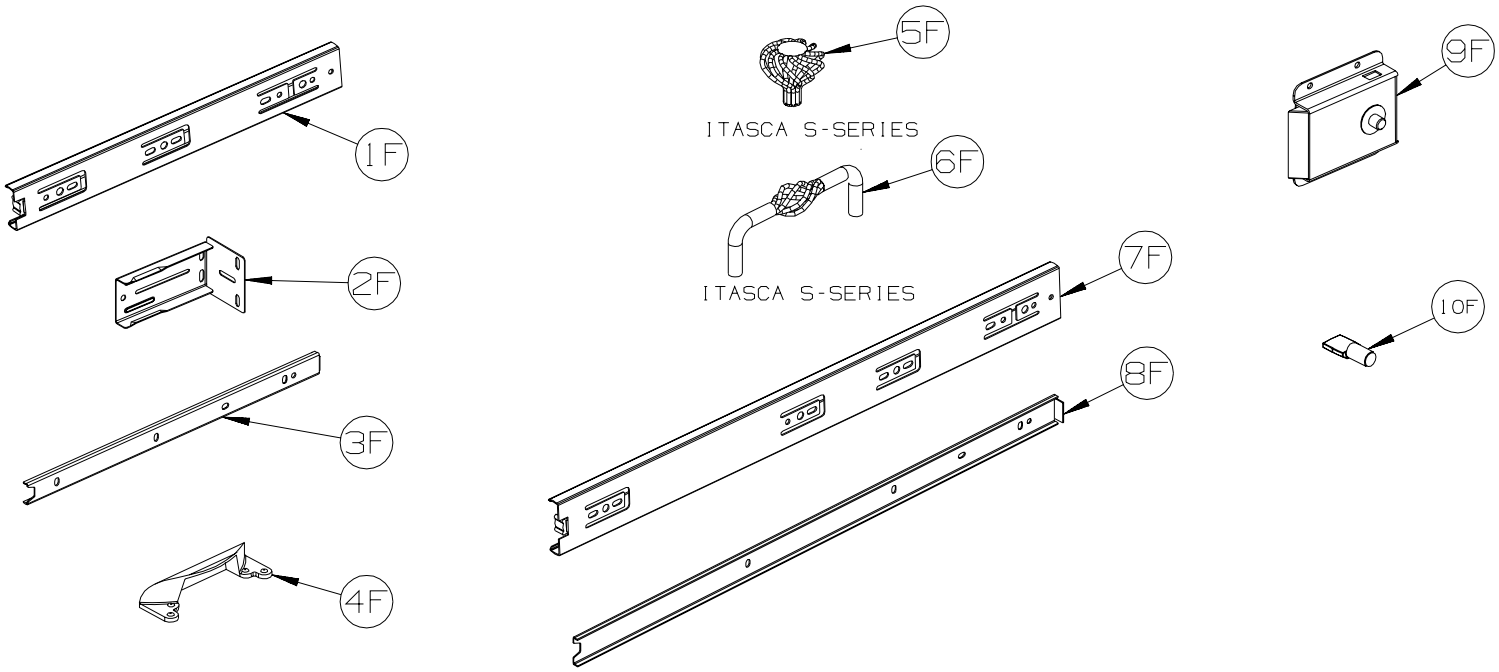

KEY	PART NUMBER	U/M	DESCRIPTION
1F	153000-01-01A	EA	SLIDE - CABINET MOUNT - 11.8"
1F	153000-03-01A	EA	SLIDE - CABINET MOUNT - 13.8"
1F	153000-05-01A	EA	SLIDE - CABINET MOUNT - 15.7"
1F	153000-07-01A	EA	SLIDE - CABINET MOUNT - 17.7"
1F	153000-09-01A	EA	SLIDE - CABINET MOUNT - 19.7"
1F	153000-11-01A	EA	SLIDE - CABINET MOUNT - 21.6"
1F	153000-14-01A	EA	SLIDE - CABINET MOUNT - 23.6"
1F	153000-16-01A	EA	SLIDE - CABINET MOUNT - 7.9"
1F	153000-18-01A	EA	SLIDE - CABINET MOUNT - 9.8"
2F	153000-13-01A	EA	BACKSOCKET - DRAWER SLIDE
3F	153000-02-01A	EA	SLIDE - DRAWER MOUNT - 11.8"
3F	153000-04-01A	EA	SLIDE - DRAWER MOUNT - 13.8"
3F	153000-06-01A	EA	SLIDE - DRAWER MOUNT - 15.7"
3F	153000-08-01A	EA	SLIDE - DRAWER MOUNT - 17.7"
3F	153000-10-01A	EA	SLIDE - DRAWER MOUNT - 19.7"
3F	153000-12-01A	EA	SLIDE - DRAWER MOUNT - 21.6"
3F	153000-15-01A	EA	SLIDE - DRAWER MOUNT - 23.4"
3F	153000-17-01A	EA	SLIDE - DRAWER MOUNT - 7.9"
3F	153000-19-01A	EA	SLIDE - DRAWER MOUNT - 9.8"
4F	153308-01-01A	EA	PULL - VANITY STOOL - SATIN NICKEL
5F	153335-01-01A	EA	PULL - KNOB - DOOR/DRAWER - ANTIQUE PEWTER - HORIZON S-SERIES
6F	153335-02-01A	EA	PULL - DOOR/DRAWER - ANTIQUE PEWTER - HORIZON S-SERIES
7F	153352-01-01A	EA	SLIDE - PANTRY - 19.7" - CABINET MOUNT
8F	153352-02-01A	EA	SLIDE - PANTRY - 19.5" - DRAWER MOUNT
9F	153353-01-01A	EA	LATCH - SLIDING/FLUSH - BLACK
10F	154385-01-01A	EA	PIN - SUPPORT/GLASS DOOR - 1/4" - BRASS
10F	154385-01-02A	EA	PIN - SUPPORT/GLASS DOOR - 1/4" - NICKEL

COPYRIGHT © 2006 WINNEBAGO INDUSTRIES INC.

LABELS GROUP

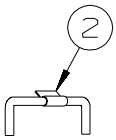

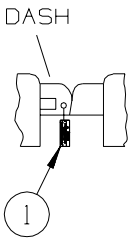

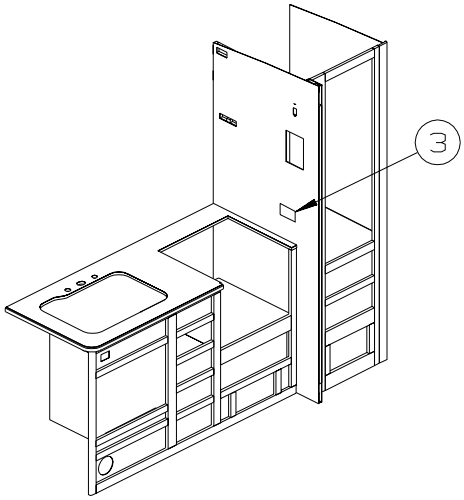

726A

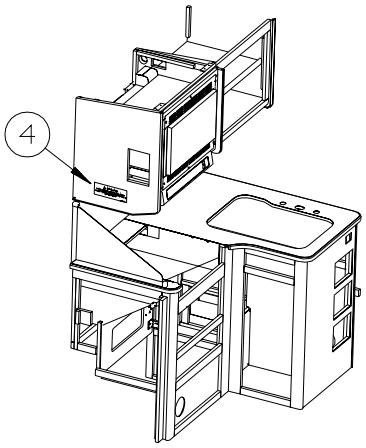

729H

KEY	PART NUMBER	U/M	DESCRIPTION
1	126612-01-000	EA	LABEL - HANG TAG - AIR BAG - DASH
2	128658-01-000	EA	LABEL - PROP ROD - ENTRY DOOR
3	143911-01-01A	EA	LABEL - CURTAIN SECUREMENT - BLACK ON CLEAR
3	155196-01-01A	EA	LABEL - CURTAIN SECUREMENT - BLACK ON CLEAR - CSA
4	143911-02-01A	EA	LABEL - CURTAIN SECUREMENT - BLACK ON CLEAR
4	155196-01-01A	EA	LABEL - CURTAIN SECUREMENT - BLACK ON CLEAR - CSA

ELEC SERVICE DOOR

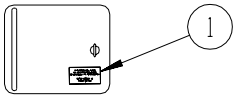

KEY	PART NUMBER	U/M	DESCRIPTION
1	125306-01-01A	EA	LABEL - ELECTRICAL ENTRANCE - 110V 30 AMP - BLACK ON CLEAR
1	125306-04-01A	EA	LABEL - ELECTRICAL ENTRANCE - 120/20V 50 AMP - BLACK ON CLEAR

723D SERVICE PANEL

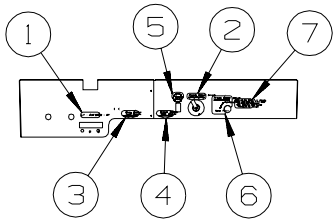

726A & 729H SERVICE PANEL

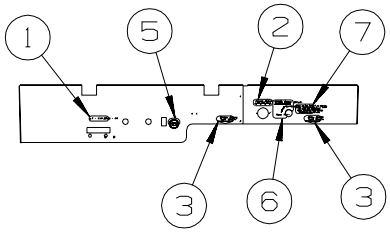

KEY	PART NUMBER	U/M	DESCRIPTION
1	136360-02-01A	EA	LABEL - AIR BAGS - BLACK/CLEAR - AIR SPRINGS REAR
2	152538-02-01A	EA	LABEL - FRESH WATER - PANTONE/CLEAR
3	152541-03-01A	EA	LABEL - GRAY WASTE
3	152543-03-01A	EA	LABEL - BLACK WASTE
4	152543-03-01A	EA	LABEL - BLACK WASTE
5	152544-03-01A	EA	LABEL - SWITCHES
6	152548-01-01A	EA	LABEL - VALVE/FRESH
7	154292-01-01A	EA	LABEL - TANK FILL VALVE

COPYRIGHT © 2006 WINNEBAGO INDUSTRIES INC.

LABELS GROUP (CONTINUED)

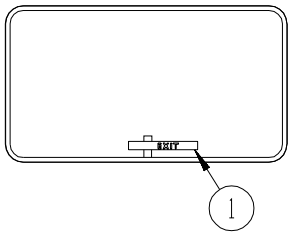

EXIT WINDOW
(POP-OUT STYLE)

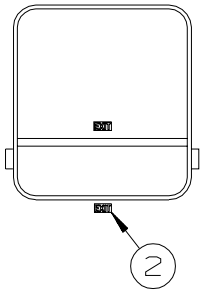

EXIT WINDOW
(HINGE STYLE)

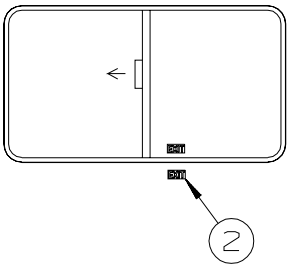

EXIT WINDOW
(SLIDER STYLE)

KEY	PART NUMBER	U/M	DESCRIPTION
1	107571-01-000	EA	LABEL - EXIT/ESCAPE WINDOW
2	039290-01-000	EA	LABEL - WARNING - EXIT

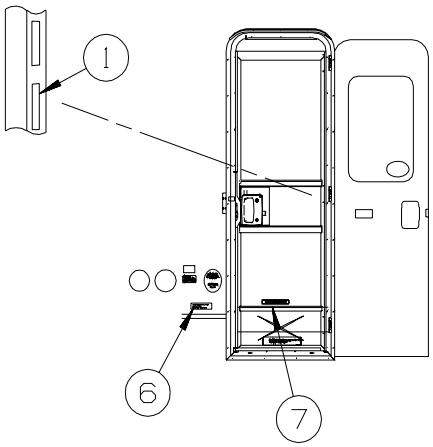

ENTRANCE DOOR

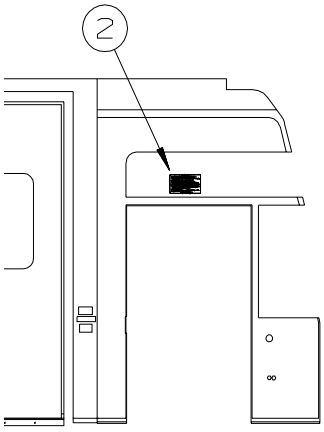

DRIVERS DOOR
(G-SERIES)

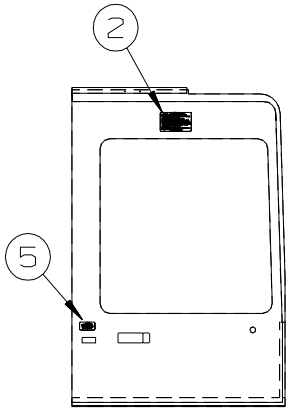

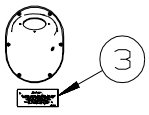

GASOLINE ONLY

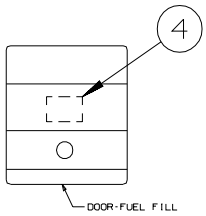

DOOR FUEL FILL

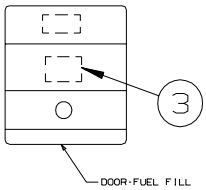

DOOR FUEL FILL

KEY	PART NUMBER	U/M	DESCRIPTION
1	135869-01-02A	EA	LABEL - MERCURY CONTENT - WHITE ON CLEAR
1	135869-01-01A	EA	LABEL - MERCURY CONTENT - BLACK 0N CLEAR
2	056259-01-000	EA	LABEL - SAFETY CHECK LIST
3	124519-01-02A	EA	LABEL - WARNING/REFUELING - WHITE ON CLEAR
3	124519-01-01A	EA	LABEL - WARNING/REFUELING - BLACK ON CLEAR
3	124519-02-02A	EA	LABEL - WARNING/REFUELING - WHITE ON CLEAR - CSA - CANADIAN
3	124519-02-01A	EA	LABEL - WARNING/REFUELING - BLACK ON CLEAR - CSA - CANADIAN
4	068383-01-000	EA	LABEL - DIESEL FUEL
5	099689-01-000	EA	LABEL - WARNING - CANCER/TOXICITY
6	099509-01-000	EA	LABEL - AWNING INSTALLATION
7	065748-01-000	EA	LABEL - WARNING - BATTERY CHARGING - UL
7	065748-02-000	EA	LABEL - WARNING - BATTERY CHARGING -CSA - CANADIAN

COPYRIGHT © 2006 WINNEBAGO INDUSTRIES INC.

LABELS GROUP (CONTINUED)

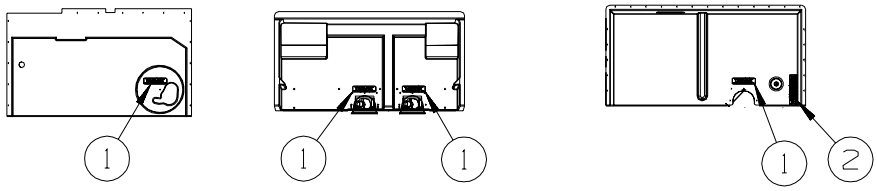

TYPICAL WATER CENTER COMPARTMENTS

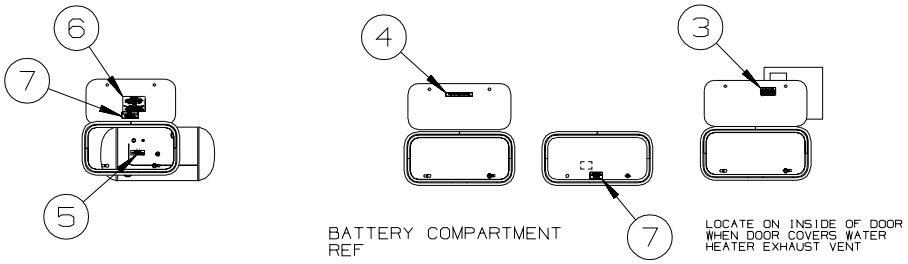

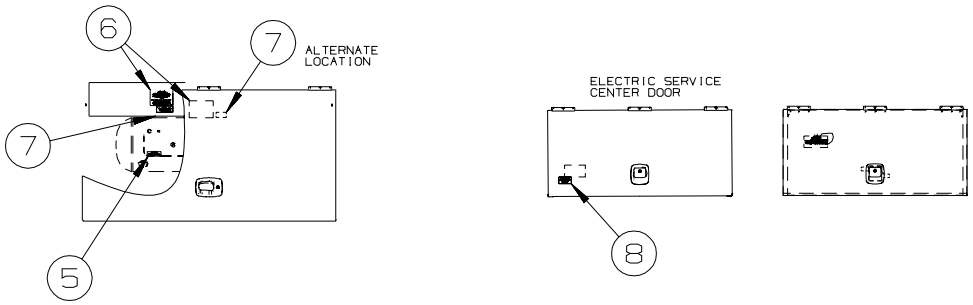

KEY	PART NUMBER	U/M	DESCRIPTION
1	123562-01-000	EA	LABEL - SERVICE/UTILITY ACCESS
2	147845-01-01A	EA	LABEL - DRIP VALVE
3	113402-01-000	EA	LABEL - CAUTION - WATER HEATER EXHAUST
4	065748-01-000	EA	LABEL - WARNING - BATTERY CHARGING - UL
4	065748-02-000	EA	LABEL - WARNING - BATTERY CHARGING - CSA - CANADIAN
5	079965-01-000	EA	LABEL - LPG - 80% CAPACITY
6	124520-01-02A	EA	LABEL - LP GAS ONLY - WHITE ON CLEAR
6	124520-01-01A	EA	LABEL - LP GAS ONLY - BLACK ON CLEAR
6	023769-01-000	EA	LABEL - WARNING - LPG - CANADIAN - CANADIAN
7	124519-01-02A	EA	LABEL - WARNING/REFUELING - WHITE ON CLEAR
7	124519-01-01A	EA	LABEL - WARNING/REFUELING - BLACK ON CLEAR
7	124519-02-02A	EA	LABEL - WARNING/REFUELING - WHITE ON CLEAR - CSA - CANADIAN
7	124519-02-01A	EA	LABEL - WARNING/REFUELING - BLACK ON CLEAR - CSA - CANADIAN
8	125306-01-01A	EA	LABEL - ELECTRICAL ENTRANCE - 110V 30 AMP - BLACK ON CLEAR
8	125306-01-02A	EA	LABEL - ELECTRICAL ENTRANCE - 110V 30 AMP - WHITE ON CLEAR
8	125306-04-01A	EA	LABEL - ELECTRICAL ENTRANCE-120/20V 50 AMP-BLACK ON CLEAR
8	125306-04-02A	EA	LABEL - ELECTRICAL ENTRANCE-120/240V 50 AMP-WHITE ON CLEAR

COPYRIGHT © 2006 WINNEBAGO INDUSTRIES INC.

LABELS GROUP (CONTINUED)

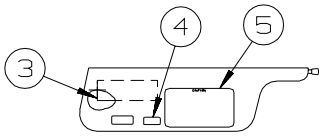

LABELS SHALL BE LOCATED ON OPPOSITE SIDE OF VISOR THAT THE AIR BAG LABEL IS INSTALLED ON

D, F AND C-BODIES

TYPICAL SEAT AND BELT CONFIGURATIONS

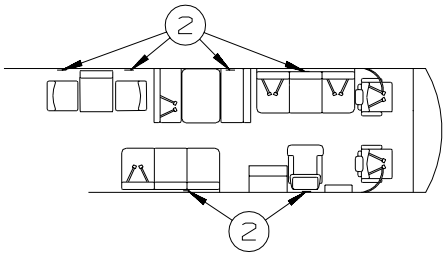

FOLDING CHAIRS

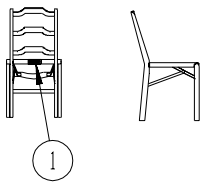

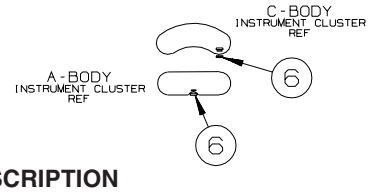

KEY	PART NUMBER	U/M	DESCRIPTION
1	134537-01-01A	EA	LABEL - OCCUPANCY - CHAIR - US
1	134537-02-01A	EA	LABEL - OCCUPANCY - CHAIR - CSA - CANADIAN
2	134538-01-01A	EA	LABEL - OCCUPANCY - NO SEAT BELT - BLACK ON CLEAR - US
2	134538-02-01A	EA	LABEL - OCCUPANCY - NO SEAT BELT - BLACK ON CLEAR - CSA - CANADIAN
3	126611-01-000	EA	LABEL - AIR BAG - VISOR
4	099689-01-000	EA	LABEL - WARNING - CANCER/TOXICITY
5	056259-01-000	EA	LABEL - SAFETY CHECK LIST
6	155692-01-01A	EA	LABEL - ODOMETER - READ IN MILE - BLACK/WHITE
6	155692-01-02A	EA	LABEL - ODOMETER - READ IN MILE - WHITE/CLEAR

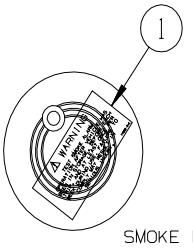

SMOKE DETECTOR
REF

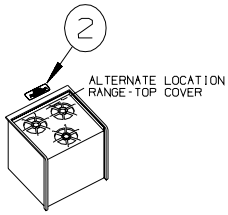

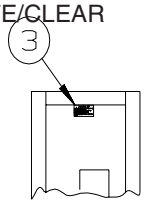

INSIDE OF GALLEY
CABINET DOOR
REF

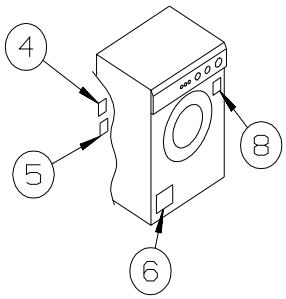

SLIDEOUT SWITCH

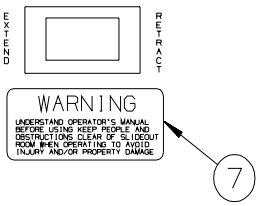

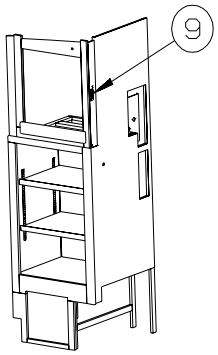

SWING OUT/SLIDING TV INSTL

KEY	PART NUMBER	U/M	DESCRIPTION
1	077956-01-000	EA	LABEL - WARNING/SMOKE DETECTOR
2	134539-01-01A	EA	LABEL - WARNING - STOVE/HEATING - US - BLACK ON CLEAR
2	134540-01-01A	EA	LABEL - WARNING - STOVE/HEATING - CSA - BLACK ON CLEAR - CANADIAN
3	073998-01-000	EA	LABEL - LPG/ODOR WARNING
4	147525-01-000	EA	LABEL - DRYER VENT CUTOUT
5	147524-01-000	EA	LABEL - DRYER VENTING
6	130670-01-01A	EA	LABEL - CAUTION DRYER VENTING - BLACK ON CLEAR - WASHER/DRYER
7	116549-02-000	EA	LABEL - WARNING - SLIDEOUT - 1.18” x 3”
8	153640-01-01A	EA	LABEL - WINTERIZATION - WASHER DRYER - WASHER/DRYER
9	079966-01-000	EA	LABEL - WARNING - STOWED - MOTION

COPYRIGHT © 2006 WINNEBAGO INDUSTRIES INC.

LABELS GROUP (CONTINUED)

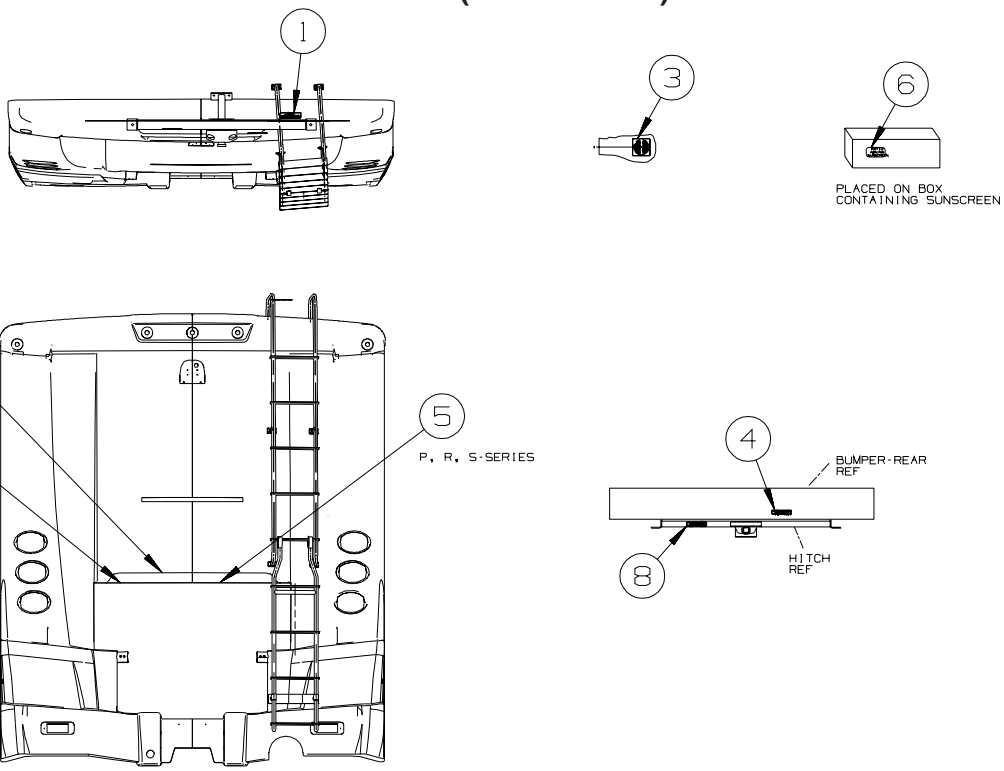

KEY	PART NUMBER	U/M	DESCRIPTION
1	128218-01-01A	EA	LABEL - WARNING - SLIPPERY ROOF
2	116756-03-000	EA	LABEL - WARNING - ETHER/STARTING - RED W/WHITE BACKGROUND
3	120431-01-000	EA	LABEL - LOCATION - COAXIAL CABLE/SATELLITE ANTENNA
4	129669-01-01A	EA	LABEL - HITCH/VEHICLE RATE - 350 - WHITE ON CLEAR - 500 SERIES & F35D ONLY
4	129669-01-02A	EA	LABEL - HITCH/VEHICLE RATE - 350 - BLACK ON CLEAR - 500 SERIES & F35D ONLY
4	129669-02-01A	EA	LABEL - HITCH/VEHICLE RATE - 500 - WHITE ON CLEAR
4	129669-02-02A	EA	LABEL - HITCH/VEHICLE RATE - 500 - BLACK ON CLEAR
5	156213-01-01A	EA	LABEL - CHASSIS BATTERY DISCONNECT - WHITE/BLACK
6	156214-01-01A	EA	LABEL - PATIO AWNING SUNSCREEN - WHITE/BLACK
7	134359-01-01A	EA	LABEL - WARNING - DRIVE BELTS
8	129669-01-01A	EA	LABEL - HITCH/VEHICLE RATE - 350 - WHITE ON CLEAR - 300, 400, 500, 700 SERIES & F35D ONLY
8	129669-01-02A	EA	LABEL - HITCH/VEHICLE RATE - 350 - BLACK ON CLEAR - 300, 400, 500, 700 SERIES & F35D ONLY
8	129669-02-01A	EA	LABEL - HITCH/VEHICLE RATE - 500 - WHITE ON CLEAR
8	129669-02-02A	EA	LABEL - HITCH/VEHICLE RATE - 500 - BLACK ON CLEAR

COPYRIGHT © 2006 WINNEBAGO INDUSTRIES INC.

LP GROUP

LP SYSTEM

KEY	PART NUMBER	U/M	DESCRIPTION
	010323-01-000	EA	ADAPTER - 3/8"F X 1/2"MPT - BRASS - 723D, 729H
	010326-01-000	EA	ADAPTER - FLARE - W/CONE GASKET - 3/8"F X 1/2"F - 723D, 729H
	010329-01-000	EA	ADAPTER - 1/2"F X 1/2"MPT - BRASS
	024250-01-000	EA	ADAPTER - BRASS - 3/8”F X 1/2”FPT - 726A
	057042-01-000	EA	ADAPTER - CROSS 1/2"PIPE - 726A, 729H
	010377-02-000	EA	NUT - 3/8" FLARE - FORGED - BRASS
	010380-02-000	EA	NUT - 1/2" FLARE - FORGED - BRASS
	010589-01-000	EA	NIPPLE - PIPE - 1/2" X 1 1/2" - BLACK - 729H
	040440-02-000	EA	TRANSMITTER - DIAL/BOLT-ON - 0-90 OHM 2 TERM(POWER/GROUND)
	045703-03-000	EA	HOSE - LP - 3/8"ID X 18" - 3/8"MPT X 1/2"F SWIVEL - US
	045703-07-000	EA	HOSE - LP - 3/8"ID X 10" - 3/8"MPT X 1/2"F SWIVEL - US - 723D, 726A
	045703-12-000	EA	HOSE - LP - 3/8"ID X 18" - 3/8"MPT X 1/2"F SWIVEL - CSA
	045703-22-000	EA	HOSE - LP - 3/8"ID X 60" - 1/2"F SWIVEL X1/2"F SWVL US/CSA - 729H
	106150-05-000	EA	REGULATOR - TWO STAGE
*	144116-09-000	EA	TANK - LP - 60 LB - 14"D X 29.75"L
	144485-01-000	EA	COVER - LP REGULATOR
	148919-01-000	EA	UNION-FLARE - 3/8" BRASS - 723D, 726A
	148919-02-000	EA	UNION-FLARE - 1/2" BRASS - 729D

***COMPONENT PARTS LISTED LATER IN THIS GROUP**

COMPONENT PARTS FOR LP SYSTEM

144116-09-000

KEY	PART NUMBER	U/M	DESCRIPTION	VENDOR NO.
	040421-01-712	EA	VALVE-SERV. W/O VAPOR RELIEF	V20373
	040421-01-713	EA	VALVE-RELIEF 1" W/SPRING 7"	V20479
	144116-01-700	EA	VALVE-OUTAGE(NO STEM REMOVE)	V20058
	144116-04-700	EA	FLOAT/SENDING UNIT W/O DIAL	G11530
	144116-04-701	EA	DIAL - TRANSMITER	G12845
	144116-09-700	EA	VALVE/FILL 80%	V20150

COPYRIGHT © 2006 WINNEBAGO INDUSTRIES INC.

SEALANTS & FASTENERS GROUP

SEALANTS & ADHESIVES

KEY	PART NUMBER	U/M	DESCRIPTION
	004001-02-000	EA	GUN - PLEXUS ADHESIVE - W/O NOZZLE
	004001-05-000	EA	ADHESIVE - SCOTCH-WELD - 3M DP100 - CLEAR - 50ML
	004011-01-000	EA	ADHESIVE-3M-4475 TUBE
	010405-02-000	EA	TAPE - THREAD SEALING - 3/8"
	034552-06-000	EA	SILICONE - TUBE - W/NOZZLE - OFF WHITE
	063642-01-000	FT	TAPE - ADHESIVE - .4" X 1.5" X 180'
	064075-07-000	FT	SEAL - BULB - W/WIRED U CHANNEL - .3" X .5" CHANNEL-BLACK
	067788-01-000	EA	ADHESIVE - SPRAY - 3M - 19.5 OZ AEROSOL CAN
	069640-01-000	FT	SEALER - RIBBON - 1/4"DIAMETER X 30 FT - BLACK OR GRAY
	069640-02-000	FT	SEALER - TAPE - 1/8"THICK X 1/2"WIDE X 60 FT - GRAY
	069640-03-000	FT	SEALER - TAPE - 1/8"THICK X 3/4"WIDE X 60 FT - BLACK
	069640-07-000	FT	SEALER - TAPE - 3/32"THICK X 2"WIDE X 45 FT - GRAY
	069640-09-000	FT	SEALER - TAPE - 1/32"THICK X 2 1/2"WIDE X 80 FT - BRT WHT
	069640-10-000	FT	SEALER - TAPE - 1/32"THICK X 1 1/2"WIDE X 90 FT - BRT WHT
	069640-11-000	FT	SEALER - TAPE - 3/16"THICK X 3/8"WIDE X 40 FT - BLACK
	069640-13-000	FT	SEALER - TAPE - 3/32"THICK X 2"WIDE X 45 FT - BLACK
	069640-14-000	FT	SEALER - TAPE - 1/16"THICK X 1"WIDE X 100 FT - BLACK
	069640-15-000	FT	SEALER - TAPE - 1/16"THICK X 3/8"WIDE X 100 FT - BRT WHT
	069640-17-000	FT	SEALER - TAPE - 1/32"THICK X 1"WIDE X 150 FT - GRAY
	069640-18-000	FT	SEALER - TAPE - 1/8"THICK X 1/2"WIDE X 60 FT - BRT WHT
	069640-19-000	FT	SEALER - TAPE - 1/8"THICK X 3/4"WIDE X 60 FT - BRT WHT
	069640-20-000	FT	SEALER - TAPE - 1/8"THICK X 1/2"WIDE X 60 FT - BLACK
	069640-21-000	FT	SEALER - TAPE - 1/16"THICK X 1/2"WIDE X 100 FT - BRT WHT
	069640-22-000	FT	SEALER - TAPE - 1/32"THICK X 1/4"WIDE X 200 FT - BRT WHT
	069640-23-000	FT	SEALER - TAPE - 1/16"THICK X 3/4"WIDE X 100 FT - BRT WHT
	069640-27-000	FT	SEALER - TAPE - 1/16"THICK X 2 1/4"WIDE X 50 FT - BRT WHT
	069640-28-000	FT	SEALER - TAPE - 1/32"THICK X 1 7/8"WIDE X 90 FT - GRAY
	069640-30-000	FT	SEALER - TAPE - 1/32"THICK X 5/8"WIDE X 50 FT - GRAY
	069640-31-000	FT	SEALER - TAPE - 1/4"THICK X 3/4"WIDE X 15 FT - BLACK
	069640-32-000	FT	SEALER - TAPE - 1/16"THICK X 3/8"WIDE X 100 FT - BLACK
	069640-33-000	FT	SEALER - RIBBON - 3/8"DIAMETER X 20 FT - BLACK
	069640-34-000	FT	SEALER - RIBBON - 1/4"DIAMETER X 30 FT - BRIGHT WHITE
	072889-10-000	EA	SEALANT/URETHANE (HV) - TUBE W/NOZZLE TIP - BRIGHT WHITE
	072889-13-000	EA	SEALANT/URETHANE (LV) - TUBE W/NOZZLE TIP - VW WHITE
	072889-28-000	EA	SEALANT/URETHANE-10 OZ TUBE W/NOZZLE-SELF LEVELING-BRT WHT
	076322-01-000	FT	TAPE-DOUBLE COATED/ADHESIVE BK-.03"THK X .8"W X 216'- WHT
	076322-02-000	FT	TAPE-DOUBLE COATED/ADHESIVE BK-.05"THK X 1"W X 108' - WHT
	076322-03-000	FT	TAPE-DOUBLE COATED/ADHESIVE BK-.05"THK X .5"W X 108' - WHT
	076322-05-000	FT	TAPE-DOUBLE COATED/ADHESIVE BK-.05"THK X .8"W X 108' - WHT
	076322-07-000	FT	TAPE-DOUBLE COATED/ADHESIVE BK-.05"THK X .5"W X 200' - BLK
	076322-11-000	FT	TAPE-DOUBLE COATED/ADHESIVE BK-.02"THK X 1"W X 216' - CLR
	076322-13-000	FT	TAPE - FOAM/DOUBLE COATED - .020"THK X .75"W - CLEAR
	076322-21-000	FT	TAPE - FOAM/DOUBLE COATED - .045"THK X .50"W
	076322-22-000	FT	TAPE - FOAM/DOUBLE COATED - .045"THK X .75"W
	076322-23-000	FT	TAPE - FOAM/DOUBLE COATED - .045"THK X 1"W
	076322-25-000	FT	TAPE - FOAM/DOUBLE COATED - .025"THK X .5"W
	086276-01-000	EA	TAPE - DOUBLE SIDED - 1/2" WIDE X 108' LONG (SOLD BY ROLL)
	088479-01-000	EA	TAPE - ALUMINUM - 3"
	090340-01-000	FT	SEAL - FOAM - CLOSED CELL - 1/4" X 1/2" X 50'
	091255-02-000	FT	SEAL - ADHESIVE BACKED/FOAM - 3/64"THICK X 3/16"W X 1000'
	091255-03-000	FT	SEAL - ADHESIVE BACKED/FOAM - 1/4" THICK X 1/4"W X 1000'
	094401-01-000	EA	SEALER - BODY SEAM - FLEXICLEAR
	094401-04-000	EA	SEALER - BODY SEAM - CLEAR
	094401-05-000	EA	SEALER - BODY SEAM - 20OZ BLACK
	094401-06-000	EA	SEALER - BODY SEAM - 12OZ BLACK
	094401-07-000	EA	SEALER - BODY SEAM - CLEAR
	098408-01-000	FT	SEAL - SPONGE RUBBER - CLOSED CELL
	099069-01-000	FT	SEAL - RUBBER - CLOSED SPONGE - .5" WIDE X .12" THICK-BLK
	099418-01-000	FT	SEAL - D-SECTION/ADHESIVE BACK - .44” X .44” - BLK RUBBER
	107828-01-000	EA	SEALANT - SB - 190 EVERSEAL
	108716-02-000	EA	SILICONE - W/NOZZLE - BUFF - SELF LEVELING
	110274-01-000	FT	TAPE - DOUBLE SIDED/FOAM - .45" X 1" X 216' - BLACK
	112864-01-000	FT	SEAL - FOAM/BUTYL COVERED - 3/8" X 35'
	112864-02-000	FT	FOAM - BUTYL COVERED - 5/16" X 44'

COPYRIGHT © 2006 WINNEBAGO INDUSTRIES INC.

SEALANTS & FASTENERS GROUP (CONTINUED)

SEALANTS & ADHESIVES (CONTINUED)

KEY	PART NUMBER	U/M	DESCRIPTION
	112864-04-000	FT	FOAM - BUTYL COVERED - 3/8" X 1/8"
	112901-02-000	EA	ADHESIVE - PLEXUS - MA330 - 50ML - GRAY
	112901-03-000	EA	ADHESIVE - PLEXUS - MA300 - 50ML - WHITE
	112902-01-000	EA	NOZZLE - ELEMENT - 3/8" X 24
	112902-03-000	EA	MIXER NOZZLE - F/GUN #00400102000 - SCOTCH-WELD & PLEXUS
	112902-04-000	EA	NOZZLE - ELEMENT - 1/4" X 3.5"
	112902-05-000	EA	NOZZLE - BAYONET - 3/8" X 18
	112902-06-000	EA	NOZZLE - ELEMENT - 1/2" X 32
	120074-02-03A	EA	SILICONE - TUBE - W/O NOZZLE - LOW ODOR - SMOKEY WHITE
	120534-01-01A	EA	TAPE - SCOTCH - 3M - 1/2" FINE LINE
	123244-01-000	FT	TAPE - DOUBLE SIDED/FOAM - 5/64"THICK X 3/4"WIDE X 108'
	123816-01-000	FT	TAPE - DOUBLE SIDED - 1" X .020" X 200' - CLEAR
	123816-02-000	FT	TAPE - DOUBLE SIDED - 1/2" X .035" X 200' - CLEAR
	123816-03-000	FT	TAPE - DOUBLE SIDED - 1/2" X .020" X 200' - CLEAR
	123816-04-000	FT	TAPE - DOUBLE SIDED - 6" X .0035" X 750' - CLEAR
	123816-06-000	FT	TAPE - DOUBLE SIDED - 3/4" X 3/4" X 200' - CLEAR
	123816-07-000	FT	TAPE - DOUBLE SIDED - 1 3/4" X 200' - CLEAR
	126427-01-000	EA	ADHESIVE - ALL PURPOSE - ABS/PVC
	126427-02-000	EA	PRIMER - CLEANER - FLEX PIPING
	131264-01-11A	EA	SILICONE - TUBE - W/NOZZLE - BEIGE
	131264-01-12A	EA	SILICONE - TUBE - W/NOZZLE - BONE
	131264-02-01A	EA	SILICONE - TUBE - W/NOZZLE - VW GRAY - BATH ONLY
	131264-03-01A	EA	SILICONE - TUBE - W/O NOZZLE - SELF LEVELING -BRIGHT WHITE
	131264-04-01A	EA	SILICONE/SEALANT/ADHESIVE - FAST CURE F/GLASS/VINYL - B/W
	131264-04-02A	EA	SILICONE/SEALANT/ADHESIVE-FAST CURE F/GLASS/VINYL-SOFT WHT
	131264-05-01A	EA	SILICONE/SEALANT - ODORLESS - TUBE - W/NOZZLE - BLACK
	131264-05-02A	EA	SILICONE/SEALANT - ODORLESS - TUBE - W/NOZZLE - CLEAR
	131384-01-000	EA	ADHESIVE - JET WELD - 10 OZ CARTRIDGE
	132892-07-01A	FT	SEAL - BULB/SINGLE - W/U CHANNEL - .5" X 1" - BLACK
	152038-01-01A	EA	TAPE - PRESERVATION SEAL - 2" X 36YD ROLL - BLACK
	154585-01-01A	FT	SEAL - FOAM TAPE - ADHESIVE BACK - 3/8" X 3/8" - GRAY
	154585-02-01A	FT	SEAL - FOAM TAPE - ADHESIVE BACK - 3/4" X 1/2" - GRAY
	154585-03-01A	FT	SEAL - FOAM TAPE - ADHESIVE 2 SIDED - 1/8" X 3/4" - BLACK
	154585-04-01A	FT	SEAL - FOAM TAPE - ADHESIVE BACK - 5/8" X 1/8" - WHITE
	900390-01-000	EA	NOZZLE - SILICONE TUBE - 2.5" LONG - W/EXTERNAL THREADS
	900390-03-000	EA	NOZZLE - SILICONE TUBE - 2 3/4" LONG W/INTERNAL THREADS
	900563-17-000	EA	TAPE - 2 SIDED, 2" X 36 YDS

BOLTS, NUTS AND WASHERS

KEY	PART NUMBER	U/M	DESCRIPTION
	0MD54F-06-000	EA	NUT - HEX W/SERATED FLANGE
	000C12-04-40B	EA	BOLT - HEX - 1/4-20 X 2 1/2 - GRADE #5 ZINC
	000C12-04-20F	EA	BOLT - HEX - 1/4-20 X 1 1/4 - GRADE #5 - STAINLESS STEEL
	000C12-04-12A	EA	BOLT - HEX - 1/4-20 X 3/4 - PLAIN 5
	000C12-05-16B	EA	BOLT - HEX - 5/16 - 18X1 - GRADE #5 - ZINC
	000C12-05-40B	EA	BOLT - HEX - 5/16"-18 X 2.5" - GRADE #5 - ZINC
	000C12-08-44B	EA	BOLT - HEX - 1/2-13 X 2 3/4 - GRADE #5 - ZINC
	000C12-08-24B	EA	BOLT - HEX - 1/2-13 X 1 1/2 - GRADE #5 - ZINC
	000C13-07-40B	EA	BOLT - HEX - 7/16-20 X 2 1/2 - GRADE #5 - ZINC
	000C13-07-72B	EA	BOLT - HEX - 7/16-20 X 4 1/2 - GRADE #5 - ZINC
	000C13-07-48B	EA	BOLT - HEX - 7/16-20 X 3 - GRADE #5 - ZINC
	000C14-07-28B	EA	BOLT - HEX - 7/16-14 X 1 3/4 - GRADE #8 - ZINC
	000C18-05-40A	EA	BOLT - ELEVATOR - 5/16-18 X 2 1/2 - PL
	000C26-04-18B	EA	BOLT - HEX - SERRATED FLANGE - 1/4-20 X 1 1/8 - ZINC
	000C26-04-14B	EA	BOLT - HEX - SERRATED FLANGE - 1/4-20 X 7/8 - ZINC
	000C26-04-12F	EA	BOLT - HEX - SERRATED FLANGE -1/4-20 X 3/4-STAINLESS STEEL
	000C26-04-10B	EA	BOLT - HEX - SERRATED FLANGE - 1/4-20 X 5/8 - ZINC
	000C26-05-12B	EA	BOLT - HEX - SERRATED FLANGE - 5/16-18 X 3/4 - ZINC
	000C26-06-20B	EA	BOLT - HEX - SERRATED FLANGE - 3/8-16 X 1 1/4 - ZINC
	000C26-06-12B	EA	BOLT - HEX - SERRATED FLANGE - 3/8-16 X 3/4 - ZINC
	000C26-06-40B	EA	BOLT - HEX - SERRATED FLANGE - 3/8-16 X 2 1/2 - ZINC
	000C26-06-28B	EA	BOLT - HEX - SERRATED FLANGE - 3/8-16 X 1 3/4 - ZINC
	000C26-08-28B	EA	BOLT - HEX - SERRATED FLANGE - 1/2-13 X 1 3/4 - ZINC
	000C26-08-24B	EA	BOLT - HEX - SERRATED FLANGE - 1/2-13 X 1 1/2 - ZINC

COPYRIGHT © 2006 WINNEBAGO INDUSTRIES INC.

SEALANTS & FASTENERS GROUP (CONTINUED)

BOLTS, NUTS AND WASHERS (CONTINUED)

KEY	PART NUMBER	U/M	DESCRIPTION
	000C27-08-48B	EA	BOLT-CARR 1/2-13X3.00 GR5 - 97 M-SERIES
	000D24-10-00B	EA	NUT - HEX - SELF LOCKING - 10-32 - ZINC
	000D28-10-00B	EA	NUT - HEX - W/NYLON LOCK - 10-32 - ZINC
	000D29-04-00F	EA	NUT - HEX - SELF LOCKING - 1/4 X 20 - STAINLESS STEEL
	000D29-04-00B	EA	NUT - HEX - SELF LOCKING - 1/4 X 20 - ZINC
	000D29-06-00B	EA	NUT - HEX - W/NYLON LOCK - 3/8-16 - ZINC
	000D29-09-00B	EA	NUT - HEX - SELF LOCKING - 9/16-12 - ZINC
	000D34-04-00B	EA	NUT - HEX - LOCKING - 1/4-20 - ZINC
	000D34-06-00B	EA	NUT - HEX - LOCKING - 3/8-16 GRADE C - ZINC
	000D39-04-00B	EA	NUT - HEX - LOCKING W/SERRATED FLANGE - 1/4-20 - ZINC
	000D39-05-00B	EA	NUT - HEX - LOCKING W/SERRATED FLANGE - 5/16-18 - ZINC
	000D39-06-00B	EA	NUT - HEX - LOCKING W/SERRATED FLANGE - 3/8-18 - ZINC
	000D39-07-00B	EA	NUT - HEX - LOCKING W/SERRATED FLANGE - 7/16-14 - ZINC
	000D39-08-00B	EA	NUT - HEX - LOCKING W/SERRATED FLANGE - 1/2-13 - ZINC
	000D44-07-00B	EA	NUT - HEX - LOCKING W/SERRATED FLANGE - 7/16-20 - ZINC
	000D44-08-00B	EA	NUT - HEX - LOCKING W/SERRATED FLANGE - 1/2-20 - ZINC
	000D46-04-00A	EA	NUT - HEX - WELD - 1/4-20 - PLAIN
	000D65-08-00B	EA	NUT - HEX - LOCKING W/SERRATED FLANGE - 8-32 - ZINC
	000D73-08-00C	EA	NUT - HEX FLANGE - 1/2-13
	000D75-09-00B	EA	NUT - HEX LOCKING - 9/16-12 - ZINC
	000D76-06-00B	EA	NUT - HEX FLANGE - 3/8-16
	000E11-04-00F	EA	WASHER - LOCKING - 1/4 MED SPLIT - STAINLESS STEEL
	000E11-07-00B	EA	WASHER - LOCKING - 7/16 MED SPLIT - ZINC
	000E11-08-00B	EA	WASHER - LOCKING - 1/2 MED SPLIT - ZINC
	000E13-17-00B	EA	WASHER - FLAT - 3/8 AR - ZINC
	000E13-18-00B	EA	WASHER - FLAT - 3/8 WIDE - ZINC
	000E13-20-00B	EA	WASHER - FLAT - 7/16 WIDE - ZINC
	000E13-22-00B	EA	WASHER - FLAT - 1/2 WIDE - ZINC
	000E13-26-00B	EA	WASHER - FLAT - 5/8 WIDE - ZINC
	000E14-10-00B	EA	WASHER - LOCKING - #10 EXTERNAL TOOTH - ZINC
	000E16-10-00B	EA	WASHER - HARDENED - 5/8 - FLAT - ZINC
	005081-01-000	EA	NUT - SPEED - C-TYPE - #8 SCREW
	039715-01-000	EA	NUT-SERT - 1/4" DIAMETER - 20 THREADS
	040921-01-000	EA	NUT - SPEED - U TYPE - #10-24 - BLACK
	040921-03-000	EA	NUT - SPEED - U TYPE - #10
	040921-04-000	EA	NUT - SPEED - U TYPE - #8-.59" LENGTH X .44" WIDTH
	040921-05-000	EA	NUT - SPEED - U-TYPE - 8-.67" X .44" WIDE
	041322-01-000	EA	WASHER - FLANGE - 15/32"ID X 2 3/8"OD - F/SEAT BELT MTG
	044364-02-000	EA	NUT - SPEED - FLAT - ROUND
	044533-01-000	EA	WASHER - 1 3/8"OD - FOR BUTTONS - PLASTIC
	051387-06-000	EA	BOLT - CARRIAGE W/O HOLE - 5/16-18 X 9 1/2 - ZINC
	058716-02-000	EA	WASHER - FLAT NYLON
	064081-03-000	EA	NUT - WING 3/8-16 - W/WELD NUT
	077071-01-000	EA	WASHER - FENDER - 3/16"ID X 1"OD
	087234-01-000	EA	NUT - JACK - 1/4 X 20 THD - MOLLY
	088787-12-000	EA	STUD - WELD - 1/4 - 20 X 1.0 LG - MN
	102333-01-06A	EA	BOLT - CARRIAGE - 7/16-14 STAINLESS STEEL CAP
	102540-02-000	EA	SEAL - SCREW
	106956-03-000	EA	BOLT - HEX TAP - 1/2-13NC X 3 - GRADE 5 - FULL THREAD/ZINC
	106956-10-000	EA	BOLT - HEX TAP - 9/16-12NC X 3 5/8 -GRD 5-FULL THREAD/ZINC
	106956-11-000	EA	BOLT - HEX TAP - 1/2-13NC X 2 1/2 - GRD 5-FULL THREAD/ZINC
	107397-01-000	EA	WASHER - FENDER - 3/4"ID X 1"OD
	108067-03-000	EA	STUD - WELD - 1/4 - 20 X 1/2 CD
	109917-03-000	EA	WASHER - 1" X .50"
	109917-04-000	EA	WASHER - 1" X .75"
	128444-01-000	EA	WASHER - SPRING - CONICAL
	135092-02-01A	EA	BOLT - HEX - SERRATED FLANGE - 1/2-20 X 2 1/2-GRADE 5 ZINC
	135092-05-01A	EA	BOLT - HEX - SERRATED FLANGE - 1/2-20 X 1 - GRADE 5 ZINC
	143399-01-01A	EA	NUT/RETAINING - 3/8"- 24 NFT
	144904-01-01A	EA	BOLT - ADJUSTMENT - HEADLAMP
	147284-02-000	EA	NUT/SELF RETAINING - 5/16"-18
	148817-01-000	EA	WASHER/SPUR - LOCKING

COPYRIGHT © 2006 WINNEBAGO INDUSTRIES INC.

SEALANTS & FASTENERS GROUP (CONTINUED)

SCREWS

KEY	PART NUMBER	U/M	DESCRIPTION
	0G1208-12-170	EA	SCREW - 8-18 X 3/4 POH - BRIGHT WHITE
	0G3908-08-170	EA	SCREW - SF/DR - 8-18 X 1/2 PPH - BRIGHT WHITE
	0G3908-08-410	EA	SCREW - SF/DR - 8-18 X 1/2 PPH - PARCHMENT
	0G3908-12-250	EA	SCREW - SF/DR - 8-18 X 3/4 PPH - DARK GRAY
	0G3908-16-170	EA	SCREW - SF/DR - 8-18 X 1 PPH - BRIGHT WHITE
	0G3908-24-170	EA	SCREW - SF/DR - 8-18 X 1 1/2 PPH - BRIGHT WHITE
	0G3910-12-170	EA	SCREW - SF/DR - 10-16 X 3/4 PPH - BRIGHT WHITE
	0G3910-12-380	EA	SCREW - SF/DR - 10-16 X .75 PPH - CASHMERE
	0G3910-12-370	EA	SCREW - SF/DR - 10-16 X .75 PPH - RIVERSTONE
	0G3910-24-170	EA	SCREW - SF/DR - 10-16 X 1 1/2 PPH - BRIGHT WHITE
	0G3910-32-330	EA	SCREW - SF/DR - 10-16 X 2.00 PPH - PUTTY
	0G5508-08-380	EA	SCREW - SF/DR - 8-18 X .5 PWH - CASHMERE
	0G5508-08-370	EA	SCREW - SF/DR - 8-18 X .5 PWH - RIVERSTONE
	0G5508-12-320	EA	SCREW - SF/DR - 8-18 X 3/4 PWH - GLACIER
	0G5508-12-170	EA	SCREW - SF/DR - 8-18 X 3/4 PWH - BRIGHT WHITE
	0G5508-12-330	EA	SCREW - SF/DR - 8-18 X 3/4 PWH - PUTTY
	0G5508-16-370	EA	SCREW - SF/DR - 8-18 X 1 PWH - RIVERSTONE
	0G5508-16-330	EA	SCREW - SF/DR - 8-18 X 1 PWH - PUTTY
	0G5508-16-250	EA	SCREW - SF/DR - 8-18 X 1 PWH - VW DARK GRAY
	0G5508-16-380	EA	SCREW - SF/DR - 8-18 X 1 PWH - CASHMERE
	0G6008-16-170	EA	SCREW - SF/DR - 8-18 X 1 POH - BRIGHT WHITE
	0G6012-32-170	EA	SCREW - SF/DR - 12-14 X 2 POH - BRIGHT WHITE
	0G6710-08-170	EA	SCREW - 10-12 X 1/2 PPH - BRIGHT WHITE
	0G6710-12-170	EA	SCREW - 10-12 X 3/4 PPH - BRIGHT WHITE
	0G6806-16-170	EA	SCREW - 6-18 X 1 POH - BRIGHT WHITE
	0G6810-24-280	EA	SCREW - 10-12 X 1 1/2 POH - SOFT WHITE
	000C20-06-24T	EA	SCREW - 3/8-16 X 1 1/2 - FLAT SOCKET
	000C28-05-24D	EA	CAPSCREW/BUTTON HEAD - 5/16-18 X 1 1/2 - #8-BLK PHOSPHATE
	000G11-06-08B	EA	SCREW - 6-20 X 1/2 PPH - ZINC
	000G11-06-10B	EA	SCREW - 6-20 X 5/8 PPH - ZINC
	000G11-06-10J	EA	SCREW - 6-20 X 5/8 PPH - BRASS
	000G11-07-08B	EA	SCREW - 7-19 X 1/2 PPH - ZINC
	000G11-08-12B	EA	SCREW - 8-18 X 3/4 PPH - ZINC
	000G11-08-06B	EA	SCREW - 8-18 X 3/8 PPH - ZINC
	000G11-08-08T	EA	SCREW - 8-18 X 1/2 PPH - FLUOROCARBON COATING
	000G11-08-12B	EA	SCREW - 8-18 X 3/4 PPH - ZINC
	000G11-08-12P	EA	SCREW - 8-18 X 3/4 PPH - DARK BROWN
	000G11-08-12S	EA	SCREW - 8-18 X 3/4 PPH - OFF WHITE
	000G11-08-12T	EA	SCREW - 8-18 X 3/4 PPH - BLACK MAGNESIUM
	000G11-08-20B	EA	SCREW - 8-18 X 1 1/4 PPH - ZINC
	000G11-08-20G	EA	SCREW - 8-18 X 1 1/4 - ANTIQUE BRASS
	000G11-10-12D	EA	SCREW - 10-16 X 3/4 PPH - BLACK
	000G12-06-12J	EA	SCREW - 6-20 X .75 POH - BRASS
	000G12-06-08T	EA	SCREW - 6-20 X 1/2 POH - BLACK
	000G12-10-16F	EA	SCREW - 10-16 X 1 POH - STAINLESS STEEL
	000G13-05-10B	EA	SCREW - 5-12 X 5/8 PFH - ZINC
	000G13-06-08B	EA	SCREW - 6-20 X 1/2 PFH - ZINC
	000G13-06-08G	EA	SCREW - 6-20 X 1/2 PFH - ANTIQUE BRASS
	000G13-06-10B	EA	SCREW - 6-20 X 5/8 PFH - ZINC
	000G13-06-10G	EA	SCREW - 6-20 X 5/8 PFH - ANTIQUE BRASS
	000G13-06-16J	EA	SCREW - 6-20 X 1 PFH - BRASS
	000G13-06-169	EA	SCREW - SF/DR - 6-20 X 1 PFH - SILVER
	000G13-06-24J	EA	SCREW - 6-20 X 1 1/2 PFH - BRASS
	000G13-07-10H	EA	SCREW - 7-19 X 5/8 PFH - BLACK
	000G13-07-12B	EA	SCREW - 7-19 X 3/4 PFH - ZINC
	000G13-08-16B	EA	SCREW - 8-18 X 1 PFH - ZINC
	000G13-08-109	EA	SCREW - 8-18 X 5/8 PFH
	000G13-08-10B	EA	SCREW - 8-18 X 5/8 PFH - ZINC
	000G13-08-24B	EA	SCREW - 8-18 X 1 1/2 PFH - ZINC
	000G16-04-24B	EA	SCREW - MACHINE - 1/4-20 X 1 1/2 PPH
	000G18-08-12B	EA	SCREW - MACHINE - 8-32 X 3/4 PPH - ZINC
	000G18-08-16B	EA	SCREW - MACHINE - 8-32 X 1 PPH - ZINC
	000G18-08-22B	EA	SCREW - MACHINE - 8-32 X 1 3/8 PPH - ZINC
	000G18-08-24B	EA	SCREW - MACHINE - 8-32 X 1 1/2 PPH - ZINC

COPYRIGHT © 2006 WINNEBAGO INDUSTRIES INC.

SEALANTS & FASTENERS GROUP (CONTINUED)

SCREWS (CONTINUED)

KEY	PART NUMBER	U/M	DESCRIPTION
	000G19-10-10B	EA	SCREW - MACHINE - 10-32 X 5/8 - PPH - ZINC
	000G19-10-08B	EA	SCREW - MACHINE - 10-32 X 1/2 PPH - ZINC
	000G19-10-20B	EA	SCREW - MACHINE - 10-32 X 1 1/2 PPH - ZINC
	000G19-10-12F	EA	SCREW - MACHINE - 10-32 X 3/4 PPH - STAINLESS STEEL
	000G36-10-12T	EA	SCREW - 10-24X 3/4 PFH TYPE 23 - BLACK
	000G39-06-10T	EA	SCREW - SF/DR - 6-20 X 5/8 PPH - BLACK
	000G39-06-16T	EA	SCREW - SF/DR - 6-20 X 1 PPH - BLACK
	000G39-08-06B	EA	SCREW - SF/DR - 8-18 X 3/8 PPH - ZINC
	000G39-08-08B	EA	SCREW - SF/DR - 8-18 X 1/2 PPH - ZINC
	000G39-08-08S	EA	SCREW - SF/DR - 8-18 X 1/2 PPH - OFF WHITE
	000G39-08-08T	EA	SCREW - SF/DR - 8-18 X 1/2 PPH - BLACK
	000G39-08-12T	EA	SCREW - SF/DR - 8-18 X 3/4 PPH - BLACK
	000G39-08-16B	EA	SCREW - SF/DR - 8-18 X 1 PPH - ZINC
	000G39-08-16S	EA	SCREW - SF/DR - 8-18 X 1 PPH - OFF WHITE
	000G39-08-16T	EA	SCREW - SF/DR - 8-18 X 1 PPH - BLACK
	000G39-08-24B	EA	SCREW - SF/DR - 8-18 X 1 1/2 PPH - ZINC
	000G39-08-24S	EA	SCREW - SF/DR - 8-18 X 1 1/2 - OFF WHITE
	000G39-08-24T	EA	SCREW - SF/DR - 8-18 X 1 1/2 PPH - BLACK
	000G39-08-32B	EA	SCREW - SF/DR - 8-18 X 2 PPH - ZINC
	000G39-10-10B	EA	SCREW - SF/DR - 10-16 X 5/8 PPH - ZINC
	000G39-10-12B	EA	SCREW - SF/DR - 10-16 X 3/4 PPH - ZINC
	000G39-10-08B	EA	SCREW - SF/DR - 10-16 X 1/2 PPH - ZINC
	000G39-10-48T	EA	SCREW - SF/DR - 10-16 X 3 PPH - BLACK
	000G39-10-48B	EA	SCREW - SF/DR - 10-16 X 3 - PPH - ZINC
	000G39-10-129	EA	SCREW - SF/DR - 10-16 X 3/4 PPH - FLUOROCARBON SILVER
	000G39-10-169	EA	SCREW - SF/DR - 10-16 X 1 PPH - FLU0R0CARBON SILVER
	000G39-10-32B	EA	SCREW - SF/DR - 10-16 X 2 - PPH - ZINC
	000G39-10-28T	EA	SCREW - SF/DR - 10-16 X 1 3/4" PPH - BLACK
	000G39-10-24T	EA	SCREW - SF/DR - 10-16 X 1 1/2" PPH - BLACK
	000G39-10-20T	EA	SCREW - SF/DR - 10-16 X 1 1/4 PPH - BLACK
	000G39-10-20B	EA	SCREW - SF/DR - 10-16 X 1 1/4 PPH - ZINC
	000G42-04-24B	EA	SCREW - SF/DR - 1/4-14 X 1 1/2 - ZINC
	000G42-04-16B	EA	SCREW - SF/DR - 1/4-14 X 1 HWH - ZINC
	000G52-06-05B	EA	SCREW - MACHINE - 6-32 X 5/16 PTH - ZINC
	000G52-06-06B	EA	SCREW - MACHINE - 6-32 X 3/8 PTH - ZINC
	000G54-04-14B	EA	SCREW - 1/4-20 X 7/8 PTH - TYPE 23 - ZINC PLATED
	000G55-08-16T	EA	SCREW - SF/DR - 8-18 X 1 PWH - BLACK
	000G55-08-124	EA	SCREW - SF/DR - 8-18 X 3/4 PWH - ASH GRAY
	000G56-12-48B	EA	SCREW - WOOD - 12-11 X 3 POH - SPECIAL HARDENED
	000G60-08-22B	EA	SCREW - SF/DR - 8-18 X 1.38 POH - ZINC
	000G60-08-20F	EA	SCREW - SF/DR - 8-19X1.25 POH
	000G60-08-16E	EA	SCREW - SF/DR - 8-1 X 1 POH - CHROME
	000G60-10-16J	EA	SCREW - SF/DR - 10-16 X 1 POH - BRIGHT BRASS
	000G60-10-28T	EA	SCREW - SF/DR - 10-16 X 1 3/4 - BLACK
	000G60-10-209	EA	SCREW - SF/DR - 10-16 X 1 1/4 POH - SILVER STALGAARD
	000G60-10-20B	EA	SCREW - SF/DR - 10-16 X 1 1/4 POH - ZINC
	000G62-06-249	EA	SCREW - SF/DR - 8-18 X 1.5 PPH - SILVER
	000G62-08-24B	EA	SCREW - SF/DR - 8-18 X 1 1/2 PFH
	000G67-08-32B	EA	SCREW - 8-15 X 2 PPH - ZINC
	000G67-10-08B	EA	SCREW - 10-12 X 1/2 PPH - ZINC
	000G67-10-08S	EA	SCREW - 10-12 X 1/2 PPH - OFF WHITE
	000G67-10-10B	EA	SCREW - 10-12 X 5/8 PPH - ZINC - TYPE A
	000G67-10-10P	EA	SCREW - 10-12 X 5/8 PPH - DARK BROWN
	000G67-10-10S	EA	SCREW - 10-12 X 5/8 PPH - OFF WHITE
	000G67-10-10T	EA	SCREW - 10-12 X 5/8 PPH - BLACK
	000G67-10-12P	EA	SCREW - 10-12 X 3/4 PPH - DARK BROWN
	000G67-10-24B	EA	SCREW - 10-12 X 1 1/2 PPH - ZINC
	000G67-10-24S	EA	SCREW - 10-12 X 1 1/2 PPH - OFF WHITE
	000G67-10-32J	EA	SCREW-10-12X2 PPH - BRIGHT BRASS
	000G68-06-10J	EA	SCREW - 6-18 X 5/8 POH - BRASS
	000G68-06-12S	EA	SCREW - 6-18 X 3/4 POH
	000G68-06-12J	EA	SCREW - 6-18 X 3/4 POH - BRASS
	000G68-06-12B	EA	SCREW - 6-18 X 3/4 POH - ZINC & CLEAR
	029130-01-000	EA	SCREW - SNAP STUD - #8-16 X 5/8" LONG

COPYRIGHT © 2006 WINNEBAGO INDUSTRIES INC.

SEALANTS & FASTENERS GROUP (CONTINUED)

SCREWS (CONTINUED)

KEY	PART NUMBER	U/M	DESCRIPTION
	029130-03-000	EA	SCREW - SNAP STUD - #8-16 X 1" LONG
	049465-01-000	EA	SCREW - 10-16 PTH W/WASHER - DARK BROWN
	049465-03-000	EA	SCREW - 10-16 X 1 POH W/WASHER - OFF WHITE
	049465-13-000	EA	SCREW-10+16X1 PTH W/WASHER - *ASH GRAY
	049465-17-000	EA	SCREW - 10-16 X 1 POH W/WASHER - BRIGHT WHITE
	049465-22-000	EA	SCREW - 10-16 X 1 1/2 POH W/WASHER - SABLE
	054434-02-000	EA	SCREW - SF/DR - 10-16 X 2 - ZINC
	054434-03-000	EA	SCREW - SF/DR - 10-16 X 2 - PWH - ZINC
	075908-01-000	EA	SCREW - MACHINE - 10-32 X .56 PTH - EXTERNAL TOOTH - ZINC
	076790-01-000	EA	SCREW - 6-20 X 1 1/4 PPH - BLACK
	076790-05-000	EA	SCREW - 6-20 X 1/2 PPH - BLACK - THREAD CUTTING/WOOD
	083554-01-000	EA	SCREW - DRYWALL - 8 X 1 1/4
	083554-04-000	EA	SCREW - DRYWALL - 8 X 2 1/2
	087721-01-000	EA	SCREW - FLAT HEAD - TAPPING - 1/4" X 1 1/4" LONG - ZINC
	097974-01-000	EA	SCREW - PARTICLE BOARD - 7-9 X 3/4 PPH
	097974-02-000	EA	SCREW-PART BD 8-9X.75 PFH - BEIGE
	101618-01-000	EA	SCREW - 1/4-20 X 3/4 HEX - TAPPING - STALGARD TYPE F
	113563-01-01A	EA	SCREW - 8 X 5/8 LONG SHOULDER/WASHER HEAD
	118383-01-04A	EA	RETAINER/RECESSED - F/.22" SCREW - BRIGHT WHITE
	118383-01-09A	EA	RETAINER/RECESSED - F/.22" SCREW - GLACIER
	118383-01-12A	EA	RETAINER/RECESSED - F/.22" SCREW - RIVERSTONE
	118383-01-11A	EA	RETAINER/RECESSED - F/.22" SCREW - CASHMERE
	118383-01-10A	EA	RETAINER/RECESSED - F/.22" SCREW - STORM GRAY
	118383-02-10A	EA	RETAINER/RECESSED - F/.27" SCREW - RIVERSTONE
	118383-02-13A	EA	RETAINER/RECESSED - F/.27" SCREW - OFF WHITE
	118383-02-11A	EA	RETAINER/RECESSED - F/.27" SCREW - CASHMERE
	118383-03-09A	EA	RETAINER/RECESSED - F/.32" SCREW - GLACIER
	118383-04-04A	EA	CAP - F/RECESSED RETAINER - BRIGHT WHITE
	118383-04-12A	EA	CAP - F/RECESSED RETAINER - STORM GRAY
	118383-04-11A	EA	CAP - F/RECESSED RETAINER - CASHMERE
	118383-04-10A	EA	CAP - F/RECESSED RETAINER - RIVERSTONE
	118383-04-09A	EA	CAP - F/RECESSED RETAINER - GLACIER
	118383-04-13A	EA	CAP - F/RECESSED RETAINER - OFF WHITE
	134126-01-01A	EA	SCREW/NAIL - HEX HEAD - 3/4"
	140040-01-000	EA	SCREW - 1/4-20 X 1 - BUTTON HEAD/SOCKET - W/LOCTITE
	149753-01-02A	EA	RETAINER/RECESSED - F/.22" SCREW - BRIGHT WHITE
	149753-01-02A	EA	RETAINER/RECESSED - F/.22" SCREW - BRIGHT WHITE
	149753-01-01A	EA	RETAINER/RECESSED - F/.22" SCREW - BLACK
	149753-02-02A	EA	CAP - F/RECESSED RETAINER - BRIGHT WHITE
	149753-02-01A	EA	CAP - F/RECESSED RETAINER - BLACK
	154938-01-02A	EA	SCREW - SF/DR - 10-16 X 3/4 PPH - W/SELF SEAL - BLACK
	154938-01-01A	EA	SCREW - SF/DR - 10-16 X 3/4 PPH - W/SELF SEAL-BRIGHT WHITE
	154938-02-03A	EA	SCREW - SF/DR - 8-18 X 1 PFH - W/SELF SEAL - SILVER
	154938-02-01A	EA	SCREW - SF/DR - 8-18 X 1 PFH - W/SELF SEAL - BRIGHT WHITE

CLAMPS, CLIPS, GROMMETS, RIVETS & PLUGS

KEY	PART NUMBER	U/M	DESCRIPTION
	000H14-06-06R	EA	RIVET-MANDREL BLIND,3/16 AL - CHERRY BSP-66
	000H16-04-06R	EA	RIVET - POP ALUMINUM - 1/8 X .313 - .375
	000H16-06-10R	EA	RIVET - POP ALUMINUM - 3/16 X .501 - .625
	007161-01-000	EA	CLAMP - HOSE - SPRING TYPE - 1/2"
	008386-01-000	EA	GROMMET - SNAP - 3/8" DIAMETER - NYLON
	010495-01-000	EA	CLAMP - CABLE - 9/16"ID - BLACK
	010495-02-000	EA	CLAMP - CABLE - 3/8"ID - BLACK
	010495-04-000	EA	CLAMP - CABLE - 11/16"ID - WHITE
	010497-01-000	EA	CLAMP - CLOSED - 5/8"ID
	010497-02-000	EA	CLAMP - CLOSED - 1.5"ID
	010497-03-000	EA	CLAMP - CLOSED - 1"ID - CUSHIONED
	010497-04-000	EA	CLAMP - CLOSED - 1 5/8"ID
	010497-05-000	EA	CLAMP - CLOSED - 1/2"ID
	010497-07-000	EA	CLAMP - CLOSED - 3/8"ID
	010497-10-000	EA	CLAMP - CLOSED - 7/8"ID
	010499-01-000	EA	CLAMP - CLOSED - 3/8"ID
	016188-03-000	EA	GROMMET - LP LINE - 3/8"HOLE X 2 1/2"LONG - RUBBER

COPYRIGHT © 2006 WINNEBAGO INDUSTRIES INC.

SEALANTS & FASTENERS GROUP (CONTINUED)

CLAMPS, CLIPS, GROMMETS, RIVETS & PLUGS (CONTINUED)

KEY	PART NUMBER	U/M	DESCRIPTION
	016188-04-000	EA	GROMMET - LP LINE - 1/2"HOLE X 2 1/2"LONG - RUBBER
	016188-05-000	EA	GROMMET - LP LINE - 3/8"HOLE X 1 1/4"LONG - RUBBER
	016188-06-000	EA	GROMMET - LP LINE - 3/8"HOLE X 3 1/4"LONG - RUBBER
	016188-07-000	EA	GROMMET - L/P LINE - 1/2"HOLE X 3 1/4"LONG
	016188-08-000	EA	GROMMET - LP LINE - 1/2"HOLE X 1 1/4"LONG - RUBBER
	016188-09-000	EA	GROMMET - LP LINE - .68"HOLE X 1 1/4"LONG - RUBBER
	016188-10-000	EA	GROMMET - LP GAS - .68" X 2.5"
	023942-01-000	EA	GROMMET - RUBBER - 2"OD
	061420-04-000	EA	PLUG/PLASTIC - 1 1/4" DIAMETER
	061420-05-000	EA	PLUG/PLASTIC - 1 1/2" DIAMETER
	061420-09-000	EA	PLUG/PLASTIC - 1.00" DIAMETER
	061420-12-000	EA	PLUG/PLASTIC - 1.50" DIAMETER - RED
	061420-13-000	EA	PLUG/PLASTIC - 3/8" - FLUSH
	061420-14-000	EA	PLUG/PLASTIC - 7/8" DIAMETER - BLACK
	061420-15-000	EA	PLUG/PLASTIC - 2" DIAMETER - BLACK
	061420-16-000	EA	PLUG/PLASTIC - 2 1/8" DIAMETER - BLACK
	062401-01-000	EA	CLAMP - HOSE - WORMGEAR - .25" - 1"
	062401-02-000	EA	CLAMP - HOSE - WORMGEAR - 1.56" - 2.5" ID
	062401-03-000	EA	CLAMP - HOSE - WORMGEAR - .22" - 1" ID
	062401-04-000	EA	CLAMP - HOSE - WORMGEAR - .69" - 1.25" ID
	062401-05-000	EA	CLAMP - HOSE - WORMGEAR - 2" - 3" ID
	062401-06-000	EA	CLAMP - HOSE - WORMGEAR - .22" - .62" ID
	062401-09-000	EA	CLAMP - HOSE - WORMGEAR - 2.8" - 3.75" ID
	062401-11-000	EA	CLAMP - HOSE - WORMGEAR - 3.50" - 4.50" ID
	062401-13-000	EA	CLAMP - HOSE - WORMGEAR
	071015-01-000	EA	GROMMET - RUBBER - .5"ID X 1"OD-W/.38" GROOVE - BLACK
	071015-22-000	EA	GROMMET - RUBBER - .62"ID X 1.12"OD W/.19" GROOVE - BLACK
	071015-26-000	EA	GROMMET - RUBBER - 1.5"ID X 2.1"OD W/.06" GROOVE - BLACK
	071015-29-000	EA	GROMMET - RUBBER - .3"ID X 1.3"OD W/.12" GROOVE - BLACK
	071015-30-000	EA	GROMMET - RUBBER - .3"ID X .81"OD W/.12" GROOVE - BLACK
	071015-37-000	EA	GROMMET - .81 ID FITS .56 MTL
	071015-39-000	EA	GROMMET - .75 ID FITS .06 MTL
	071015-41-000	EA	GROMMET - .125 ID FITS .188 MTL
	071015-42-000	EA	GROMMET - .25 ID FITS .06 MTL
	075148-02-000	EA	CLAMP - GROUNDING - BRONZE SCREWS
	077955-01-000	EA	CLIP/J - 3/8" - VINYL COATED
	080734-02-000	EA	CLIP - WIRE NYLON
	081211-01-000	EA	PLUG - PLASTIC - .31"DIA - BLACK
	081211-03-000	EA	PLUG - PLASTIC - .50"DIAMETER - TRUSS HEAD - BLACK
	081211-04-000	EA	PLUG - PLASTIC - .46"DIAMETER - TRUSS HEAD - BLACK
	083609-01-000	EA	CLAMP - WIRE - DUAL - EQUAL DIAMETERS - 5/8"
	083610-01-000	EA	CLAMP - WIRE - DUAL - UNEQUAL DIAMETERS - 3/4" & 1 1/4"
	083610-02-000	EA	CLAMP - WIRE - DUAL - UNEQUAL DIAMETERS - 3/4" & 2"
	083610-03-000	EA	CLAMP - WIRE - DUAL - EQUAL DIAMETERS - 2"
	088756-01-000	EA	GROMMET - WEB - 1 1/8"ID
	089329-02-000	EA	CLIP - SPRING
	091952-01-000	EA	CLIP - GRIPPER - 1" - BLACK VINYL COATED
	091952-02-000	EA	CLIP - GRIPPER - 3/4" - BLACK VINYL COATED
	091952-03-000	EA	CLIP - GRIPPER - 1/2" - BLACK VINYL COATED
	094362-02-000	EA	CLIP - XMAS TREE - BINDER HEAD - .9" LONG/ANY COLOR
	094362-05-000	EA	CLIP - XMAS TREE - ROUND HEAD - 1.4" LONG/ANY COLOR
	113133-02-01A	EA	RIVET - POP - ALUMINUM - 3/16 X .252 - .504 - BLACK
	114208-03-000	EA	GROMMET - EDGE LINER - FITS 2 1/2"
	114208-05-000	EA	GROMMET - EDGE LINER - FITS 2"
	118626-01-02A	EA	RIVET/POP - ALUMINUM - 3/16 X .08 - .375
	118626-01-01A	EA	RIVET/POP - ALUMINUM - 3/16 X 1.2"(GRIP RANGE .1"-.4")
	118626-02-01A	EA	RIVET/POP - ALUMINUM - 3/16 X .500 - .750
	118626-03-01A	EA	RIVET/POP - STAINLESS STEEL - 3/16 X .500 - .750
	137014-01-02A	EA	GROMMET - CABLE - BROWN
	137014-01-01A	EA	GROMMET - CABLE - ALMOND
	137014-01-03A	EA	GROMMET - CABLE - BLACK
	139118-02-01A	EA	GROMMET - SCREW - PLASTIC
	155498-01-01A	EA	CLAMP - CLOSED - 7/8"ID - VINYL DIP/GALVONIZED - BLACK

COPYRIGHT © 2006 WINNEBAGO INDUSTRIES INC.

SEALANTS & FASTENERS GROUP (CONTINUED)

MISCELLANEOUS FASTENERS

KEY	PART NUMBER	U/M	DESCRIPTION
	008343-01-000	EA	TIE - WIRE - 6"
	008343-02-000	EA	TIE - WIRE - 14"
	008343-03-000	EA	TIE - WIRE - 7 1/2" - BLACK
	029094-04-000	YD	VELCRO TAPE/LOOP - 1"WIDE - W/ADHESIVE BACK - BLACK
	029096-03-000	YD	VELCRO TAPE/HOOK - 1"WIDE - BLACK
	029096-04-000	YD	VELCRO TAPE/HOOK - 1"WIDE - BLACK - W/ADHESIVE BACK (PSA)
	048394-02-000	YD	VELCRO TAPE - HOOK - ADHESIVE BACK - 3/4" WIDE - BEIGE
	085774-01-000	FT	FASTENER - DUAL LOCK - 1" WIDE - ADHESIVE BACK - BLACK
	085774-02-000	FT	FASTENER - DUAL HOOK - 1" WIDE - ADHESIVE BACK - BLACK
	088792-02-000	YD	VELCRO TAPE - LOOP - 3/4" - ADHESIVE BACK - BEIGE
	088792-04-000	YD	VELCRO TAPE - HOOK - 5/8" - NON-ADHESIVE BACK - WHITE
	088792-05-000	YD	VELCRO TAPE - LOOP - 5/8" - NON-ADHESIVE BACK - WHITE
	108046-01-000	EA	CABLE TIE - SCREW MOUNT 8"
	108046-02-000	EA	CABLE TIE - SCREW MOUNT 15"
	110943-01-000	FT	FELT STRIP - 3/8" - ADHESIVE BACK - BLACK - 75' PER ROLL
	110943-02-000	FT	FELT STRIP - 3/8" - ADHESIVE BACK - WHITE
	143059-03-02A	EA	PAD/FELT - 1/4” THICK - ADHESIVE BACK - WHITE

COPYRIGHT © 2006 WINNEBAGO INDUSTRIES INC.

WATER & SEWAGE GROUP

DRAINAGE SYSTEM

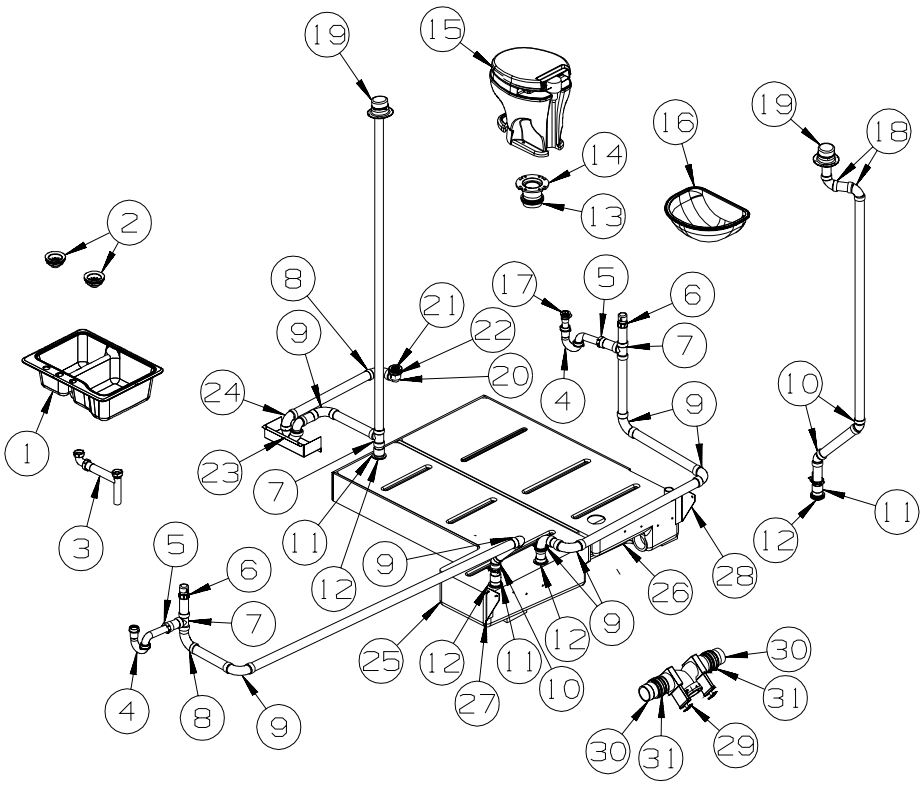

KEY	PART NUMBER	U/M	DESCRIPTION
1	148870-01-01A	EA	SINK/DOUBLE - LRG/SML BASIN - 25" X 19" X 7"
2	092303-01-000	EA	STRAINER - W/BASKET - GALLEY SINK - 4" OD
3	011091-02-000	EA	WASTE - CONTINUOUS - DOUBLE SINK
4	107538-02-000	EA	P-TRAP - PLASTIC - 1 1/2" W/EXTENSION ARM
4	011071-01-000	EA	P-TRAP - 1 1/2" - CSA - PLASTIC - CANADIAN
5	152146-01-000	EA	CONNECTOR - 1 1/2"P X 1 1/2"MPT
6	079968-01-000	EA	VENT - MECHANICAL/TRAP ARM - ANTI-SIPHON-2" X 7.3" PLASTIC
7	010071-01-000	EA	TEE - SANITARY - 1 1/2" HUB X HUB X HUB - PLASTIC
8	033761-01-000	EA	ELBOW - 90 DEGREE - TURN - 1 1/2" HUB X 1 1/2" SPIGOT
9	010008-01-000	EA	ELBOW - 90 DEGREE - 1 1/2" HUB X HUB - PLASTIC
10	010006-01-000	EA	ELBOW - 45 DEGREE - 1 1/2" HUB X HUB - PLASTIC
11	010115-01-000	EA	COUPLING - 1 1/2" HUB X HUB - PLASTIC
12	061607-01-000	EA	GROMMET - HOLDING TANK - 1 1/2" NPS
13	061607-02-000	EA	GROMMET - HOLDING TANK - 3" NPS
14	116644-01-000	EA	FLANGE/CLOSET - 3" FEMALE - 4 BOLT
			FROM: 00-00-00 THRU: 05-28-06
14	024676-01-000	EA	FLANGE/CLOSET - 4" X 3" - BLACK PLASTIC
			FROM: 05-29-06 THRU: 99-99-99
15*	147421-01-01A	EA	TOILET/AQUA MAGIC 5 (HIGH) FOOTFLUSH - W/SPRAY - WHITE
16	156661-01-01A	EA	SINK - LAVATORY - OVAL - 15" X 12" X 6.5" - GLACIER WHITE
17	106116-01-02A	EA	STRAINER/PLASTIC - STOPPER/TAILPIECE/GASKET & NUT-LAVATORY
	106116-02-01A	EA	GASKET - STRAINER
18	034250-01-000	EA	ELBOW - 90 DEGREE - LONG TURN - 1 1/2" HUB X HUB - ABS
19	083558-03-000	EA	VENT - W/COVER - F/PLUMBING STACK - OFF WHITE
20	131486-01-000	EA	ELBOW - DRAIN 1 1/2" - LOW PROFILE - TUB DRAIN
21	066440-01-000	EA	STRAINER - SHOWER DRAIN - W/RUBBER WASHER
	127440-02-01A	EA	WASHER - RUBBER - 1.8" X .1"
			FROM: 00-00-00 THRU: 01-16-06
	130403-01-000	EA	NUT - SLIP - W/WINGS 1 1/2"
22	011069-06-000	EA	TAILPIECE - 1 1/2" X 1 1/4" X 2 1/2" - BRASS
			FROM: 00-00-00 THRU: 12-19-05
23	037763-01-000	EA	P-TRAP - PLASTIC - 1 1/2 HXH W/UNION
24	010009-01-000	EA	ELBOW - 90 DEGREE - 1/4 BEND - 1 1/2" - PLASTIC
25	149286-01-000	EA	TANK - HOLDING - 32 GALLON - W/O FITTINGS

COPYRIGHT © 2006 WINNEBAGO INDUSTRIES INC.

WATER & SEWAGE GROUP (CONTINUED)

DRAINAGE SYSTEM (CONTINUED)

KEY	PART NUMBER	U/M	DESCRIPTION
26	149287-01-700	EA	TANK - HOLDING - 36 GALLON - W/3" NIPPLE - W/O FITTINGS
27	112628-08-02B	EA	BRACKET/TIEDOWN - WATER TANK - E-COATED
28	112628-07-02B	EA	BRACKET/TIEDOWN - WATER TANK - E-COATED
29	136143-01-000	EA	VALVE - DUAL - 3" X 3"
	139513-01-000	EA	HOSE - SEWER - 3" X 10' - W/ADAPTER
	062416-01-000	EA	ADAPTER - SEWER HOSE TO 3" PIPE
30	010129-03-000	EA	NIPPLE - 3" X 3" TOE - PLASTIC
31	078406-01-000	EA	COUPLER - 3" X 3" W/CLAMPS - RUBBER

***COMPONENT PARTS LISTED LATER IN THIS GROUP**

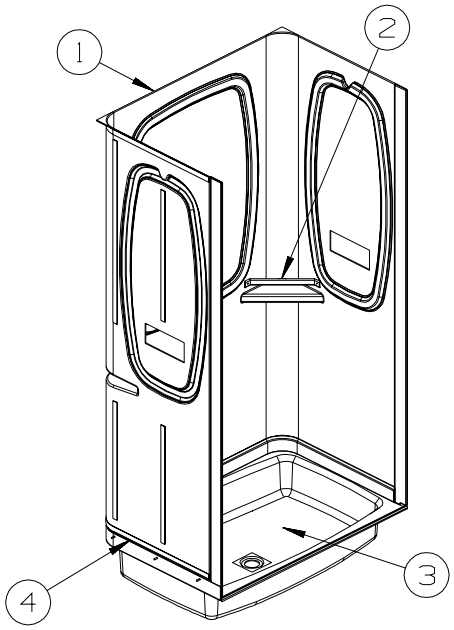

KEY	PART NUMBER	U/M	DESCRIPTION
1	147677-02-18A	EA	SURROUND - SHOWER/TUB
2	113714-04-02A	EA	RETAINER - SHELF/SHOWER - SOFT WHITE
3	M02630-87-S34	EA	SHOWER PAN - W/STRAINER
4	154585-03-01A	FT	SEAL - FOAM TAPE - ADHESIVE BACK - 1/8" X 3/4" - GRAY

COPYRIGHT © 2006 WINNEBAGO INDUSTRIES INC.

WATER & SEWAGE GROUP (CONTINUED)

COMPONENT PARTS FOR DRAINAGE SYSTEM

096927-01-02A

KEY	PART NUMBER	U/M	DESCRIPTION	VENDOR NO.
	096927-01-700	EA	SINK STOPPER	M9801
	096927-01-701	EA	TAILPIECE-DRAIN-LAVATORY	M9802

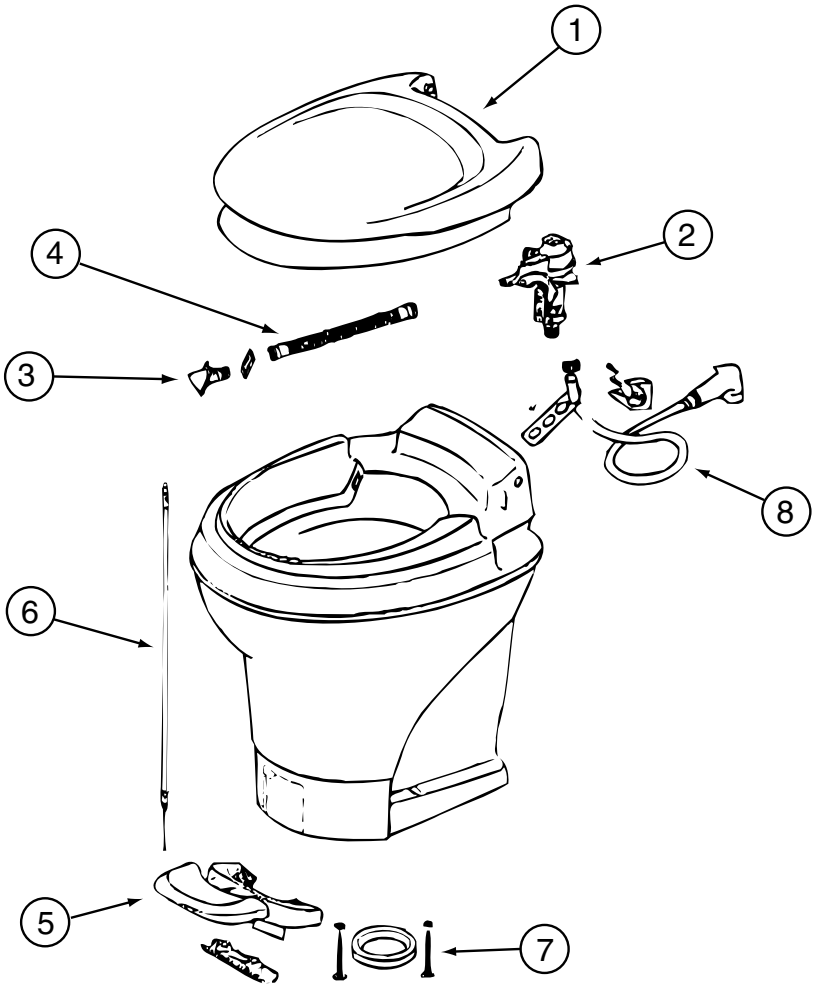

147421-01-01A, 147421-02-01A

KEY	PART NUMBER	U/M	DESCRIPTION		VENDOR NO.
1	147421-01-700	EA	SEAT & COVER ASSEMBLY(WHT)		31703
2	147421-01-701	EA	WATER MODULE ASSEMBLY		31705
3	147421-01-702	EA	NOZZLE ASSEMBLY		31706
4	147421-01-703	EA	LINK - WATER MODULE		31621
5	147421-01-704	EA	PEDAL - WHITE		31709
6	147421-01-705	EA	FOOT CABLE		31711
7	063740-01-706	EA	BOLT PACKAGE-FLOOR FLANGE		12524 THETFORD
8	147421-01-708	EA	HAND SPRAY KIT - WHITE HEAD	33226	
	147421-01-706	EA	SEAL - BLADE		31708
	147421-01-707	EA	CAP (UNIVERSAL BOLT) - WHITE		31713

COPYRIGHT © 2006 WINNEBAGO INDUSTRIES INC.

WATER & SEWAGE GROUP (CONTINUED)

WATER SYSTEM

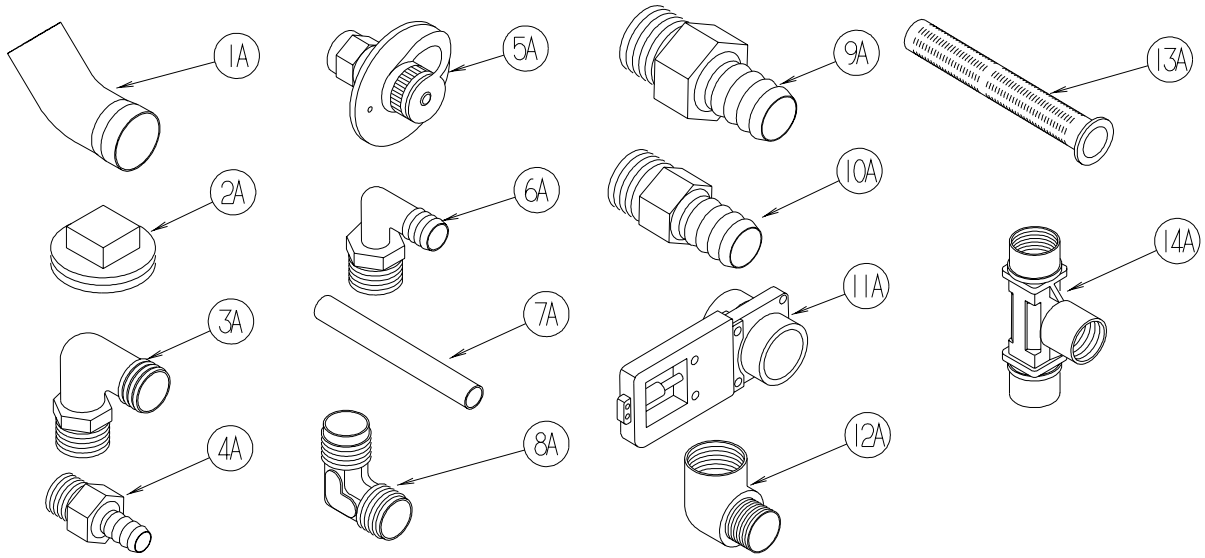

KEY	PART NUMBER	U/M	DESCRIPTION
1A	010009-01-000	EA	ELBOW - 90 DEGREE - 1/4 BEND - 1 1/2" PLASTIC
2A	010166-01-000	EA	PLUG/THREADED - 1 1/4"MPT - PLASTIC - BLACK - UL
3A	010219-01-000	EA	ELBOW - 1 1/4 MPT X 1 1/4 BARB - WATER FILL - PLASTIC
4A	010224-01-000	EA	ADAPTER - HOSE TO PIPE - 3/8 MPT X 3/8 BARB - PLASTIC
5A	010230-06-000	EA	FILL - CITY WATER - W/CHECK VALVE - MPT - BRUSHED ALUM
6A	035539-01-000	EA	ELBOW - 3/8 MPT X 3/8 BARB - PLASTIC
7A	039800-04-000	FT	TUBING - POLYBUTYL - 1/4"OD
7A	074462-02-000	FT	TUBING - VINYL - 3/8 ID X 20' - CLEAR
7A	112176-01-000	FT	TUBING - VINYL - REINFORCED - 1/2" ID
7A	124188-01-000	FT	TUBING - PEX - 1/2" ID X 20' - BLUE(COLD)
7A	124188-02-000	FT	TUBING - PEX - 1/2" ID X 20' - RED(HOT)
8A	039808-03-000	EA	ELBOW - 1/2" MPT X 1/2" MPT - PLASTIC
9A	044927-01-000	EA	ADAPTER - HOSE TO PIPE-1 1/4 MPTX1 1/4 BARB-BLACK PLASTIC
10A	044927-02-000	EA	ADAPTER - REDUCING - 1" MPT X 1.3" BARB - PLASTIC
11A	062421-03-000	EA	VALVE/DUMP W/O HANDLE - 1 1/2" X 1 1/2" HUB
	062421-05-000	EA	CABLE/ROD - F/DUMP VALVE - W/HANDLE - 48"
	062421-07-000	EA	CABLE/ROD - F/DUMP VALVE - W/HANDLE - 144"
	062421-08-000	EA	CABLE/ROD - F/DUMP VALVE - W/HANDLE - 108"
12A	065318-02-000	EA	ELBOW - 90 DEGREE - 3/8" MPT TO 3/8" FPT
13A	077954-02-000	EA	FILTER - WATER TANK - W/SCREEN IN TANK
14A	039798-01-000	EA	TEE - 1/2"MPT X 1/2"MPT X 1/2"MPT - PLASTIC

COPYRIGHT © 2006 WINNEBAGO INDUSTRIES INC.

WATER & SEWAGE GROUP (CONTINUED)

WATER SYSTEM (CONTINUED)

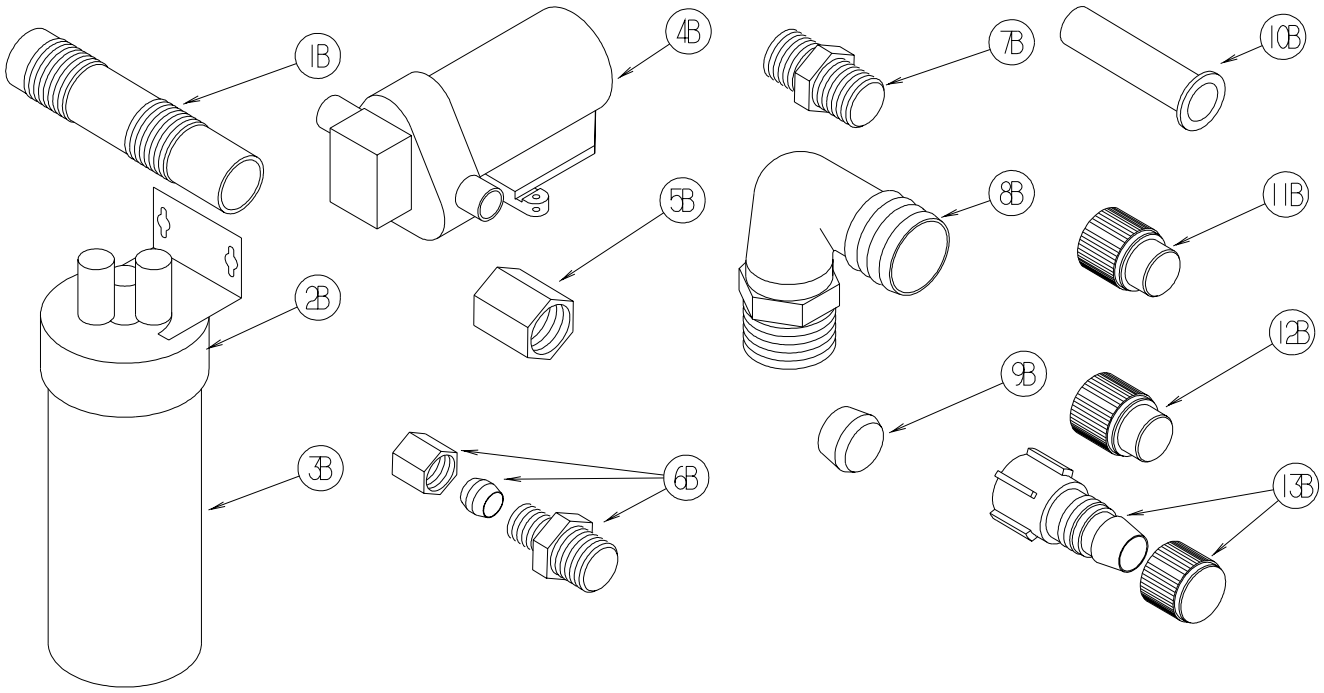

KEY	PART NUMBER	U/M	DESCRIPTION
1B	079381-01-000	FT	TUBING - RIBBED FLEXIBLE - WATER FILL - 1.4" ID
2B	087200-01-000	EA	FILTER-WATER PURIFCATION, EVERPURE QC2-AC
3B	087200-02-000	EA	CARTRIDGE-WATER FILTER,AC - EVERPURE 9601-11
4B*	098607-01-000	EA	PUMP - WATER - W/.5" MPT FITTING - FLOW 2.8 GPM
5B	101814-01-000	EA	COUPLING - FEMALE - 1/2" X 1/2" FPT - GRAY
6B	103798-01-000	EA	CONNECTOR - 1/4 OD X 3/8 MPT
7B	110438-02-000	EA	VALVE - CHECK - BRASS - 1/2 MPT X 1/2 MPT
8B	111223-02-000	EA	ELBOW - 1/2" MPT X 3/8" BARB - PLASTIC
8B	111223-03-000	EA	ELBOW - 3/4" MPT X 1/2" BARB - PLASTIC
8B	111223-04-000	EA	ELBOW - 1/2" MPT X 1/2" BARB - PLASTIC
9B	111888-01-000	EA	FERRULE - PLASTIC - .250 ID X .375 OD
10B	111888-02-000	EA	INSERT - BRASS - 1/4 COMP
11B	113697-01-000	EA	CAP - 3/8"P
12B	114427-01-000	EA	CAP - 1/2"P
13B	114427-02-000	EA	PLUG - W/COMP NUT - 1/2" PLASTIC PIPE/1/2" FLAIR-IT

COPYRIGHT © 2006 WINNEBAGO INDUSTRIES INC.

WATER & SEWAGE GROUP (CONTINUED)

WATER SYSTEM (CONTINUED)

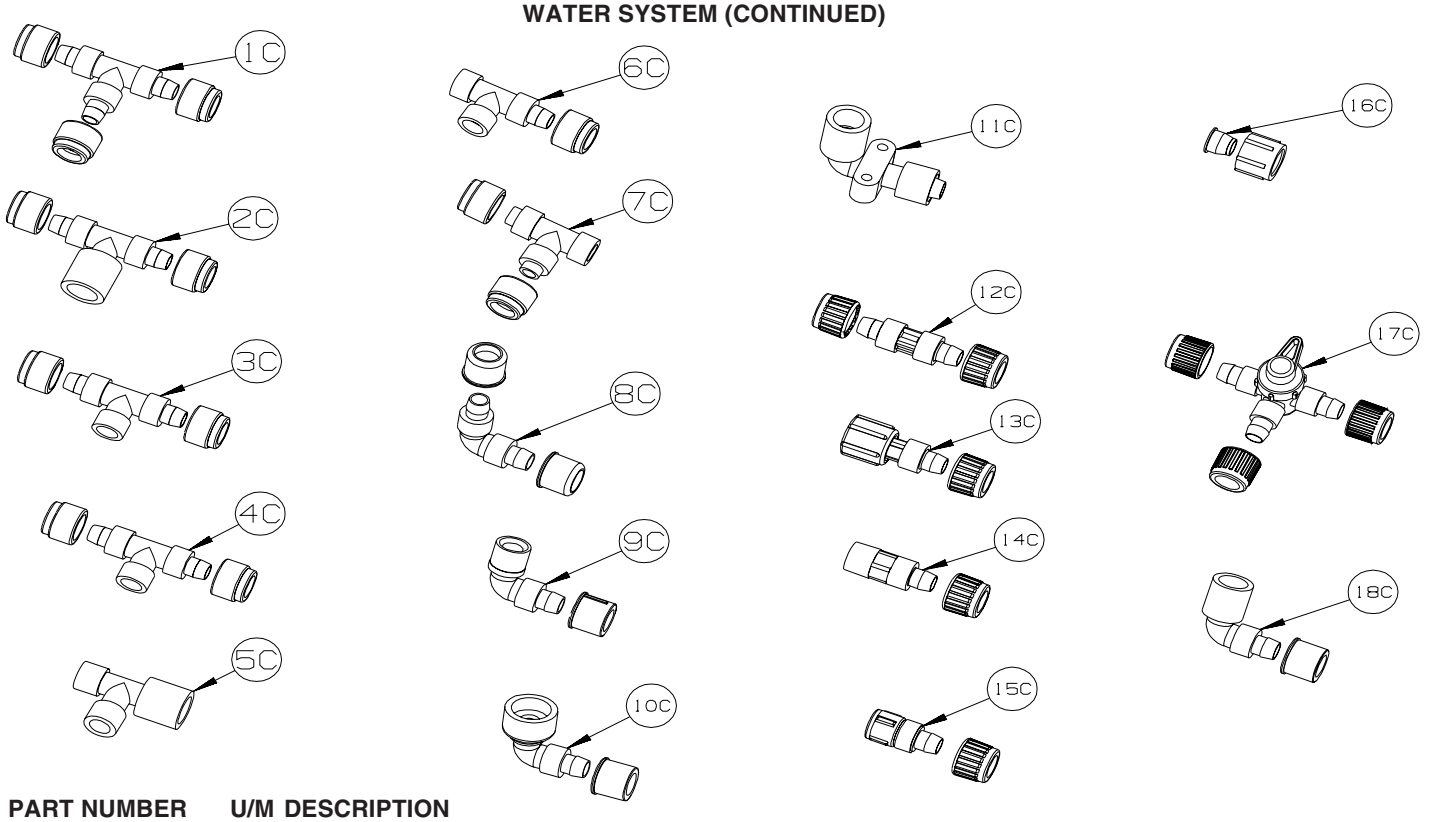

KEY	PART NUMBER	U/M	DESCRIPTION
1C	114428-01-000	EA	TEE - 1/2"P X 1/2"P X 1/2"P
2C	114428-02-000	EA	TEE - SWIVEL - 1/2"P X 1/2"P X 1/2"FPT
3C	114428-03-000	EA	TEE - 1/2"P X 1/2"P X 1/2"MPT
4C	114428-04-000	EA	TEE - 1/2"P X 1/2"P X 1/8"FPT
5C	114428-05-000	EA	TEE - 1/2" SWIVEL X 1/2" MPT X 1/2" MPT
6C	114428-06-000	EA	TEE - 1/2" P X 1/2" MPT X 1/2" MPT
7C	114428-07-000	EA	TEE - 1/2" P X 1/2" MPT X 1/2" P
8C	114429-01-000	EA	ELBOW - 1/2"P X 1/2"P
9C	114429-02-000	EA	ELBOW - 1/2"P X 1/2"MPT
9C	114429-04-000	EA	ELBOW - 1/2"P X 3/8"MPT
9C	114429-05-000	EA	ELBOW - 1/2"P X 3/4"MPT
9C	114429-10-000	EA	ELBOW - SWIVEL - 1/2"MPT X 1/2"FPT
10C	114429-06-000	EA	ELBOW - SWIVEL - 1/2"P X 3/4"FPT
10C	114429-08-000	EA	ELBOW - SWIVEL - 1/2"P X 1/2"FPT
11C	114429-09-000	EA	ELBOW - 1/2"P X 1/2"FPT DROP EAR
12C	114430-01-000	EA	ADAPTER - 1/2"P X 1/2"P
13C	114430-02-000	EA	ADAPTER - SWIVEL - 1/2"P X 1/2"FPT
13C	114430-04-000	EA	ADAPTER - SWIVEL - 1/2"P X 3/8"MPT
14C	114430-03-000	EA	ADAPTER - 1/2"P X 1/2"MPT
15C	114430-06-000	EA	ADAPTER - 1/2"P X 3/8"FPT
15C	114430-09-000	EA	ADAPTER - 1/2"P X 1/2"FPT
16C	114430-10-000	EA	ADAPTER - NUT - PIPE CONNECTION - 1/2"
17C	114431-01-000	EA	VALVE - 180 DEGREE/CENTER DRAIN - 1/2"P - THREE WAY
18C	114429-11-000	EA	ELBOW - 1/2"P X 1/2"FPT

COPYRIGHT © 2006 WINNEBAGO INDUSTRIES INC.

WATER & SEWAGE GROUP (CONTINUED)

WATER SYSTEM (CONTINUED)

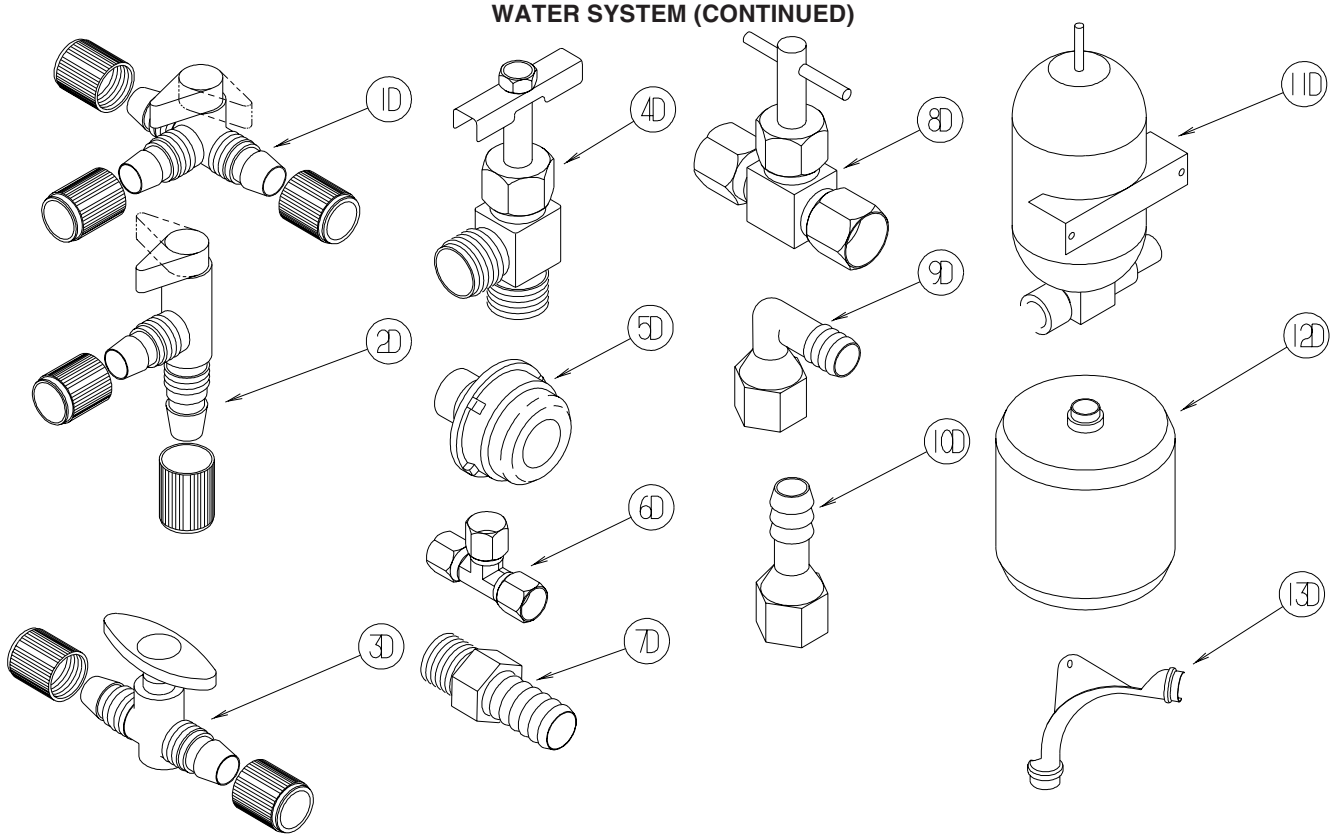

KEY	PART NUMBER	U/M	DESCRIPTION
1D	114431-02-000	EA	VALVE - WATER BYPASS - 1/2"P - THREE WAY (WATER HEATER)
2D	114431-03-000	EA	VALVE - 90 DEGREE DRAIN - 1/2"P
3D	114431-04-000	EA	VALVE - “INLINE SHUT-OFF” - 1/2"P
4D	114431-05-000	EA	VALVE - NEEDLE - 1/8" MPT X 1/4" COMPRESSION (ICE MAKER)
5D	114966-01-000	EA	FILTER - IN LINE - TWIST ON - 1/2" - NOT ILLUSTRATED FROM: 00-00-00 THRU: 09-26-04
5D	152925-01-01A	EA	FILTER - IN LINE - TWIST ON - 1/2" - BLACK - NOT ILLUSTRATED FROM: 09-27-04 THRU: 99-99-99
6D	118423-01-000	EA	FITTING - BRASS-TEE - 1/4C X 1/4C X 1/4C
7D	118809-01-000	EA	ADAPTER - 1/2" MPT X 3/8" BARB - PLASTIC
7D	118809-02-000	EA	ADAPTER - 1/2" MPT X 1/2" BARB - PLASTIC
8D	120868-01-000	EA	VALVE - NEEDLE - 1/4" COMPRESSION X 1/4" COMPRESSION
9D	123150-01-000	EA	ELBOW - 1/2 FPT X 1/2 BARB - SWIVEL
10D	123152-01-000	EA	ADAPTER - 1/2 FPT X 1/2 BARB - SWIVEL
11D	123243-01-000	EA	TANK - ACCUMULATOR - 24 OZ
12D	123317-01-000	EA	TANK - ACCUMULATOR - 2 GALLON
13D	124184-01-000	EA	SUPPORT - WATER LINE - BEND

COPYRIGHT © 2006 WINNEBAGO INDUSTRIES INC.

WATER & SEWAGE GROUP (CONTINUED)

WATER SYSTEM (CONTINUED)

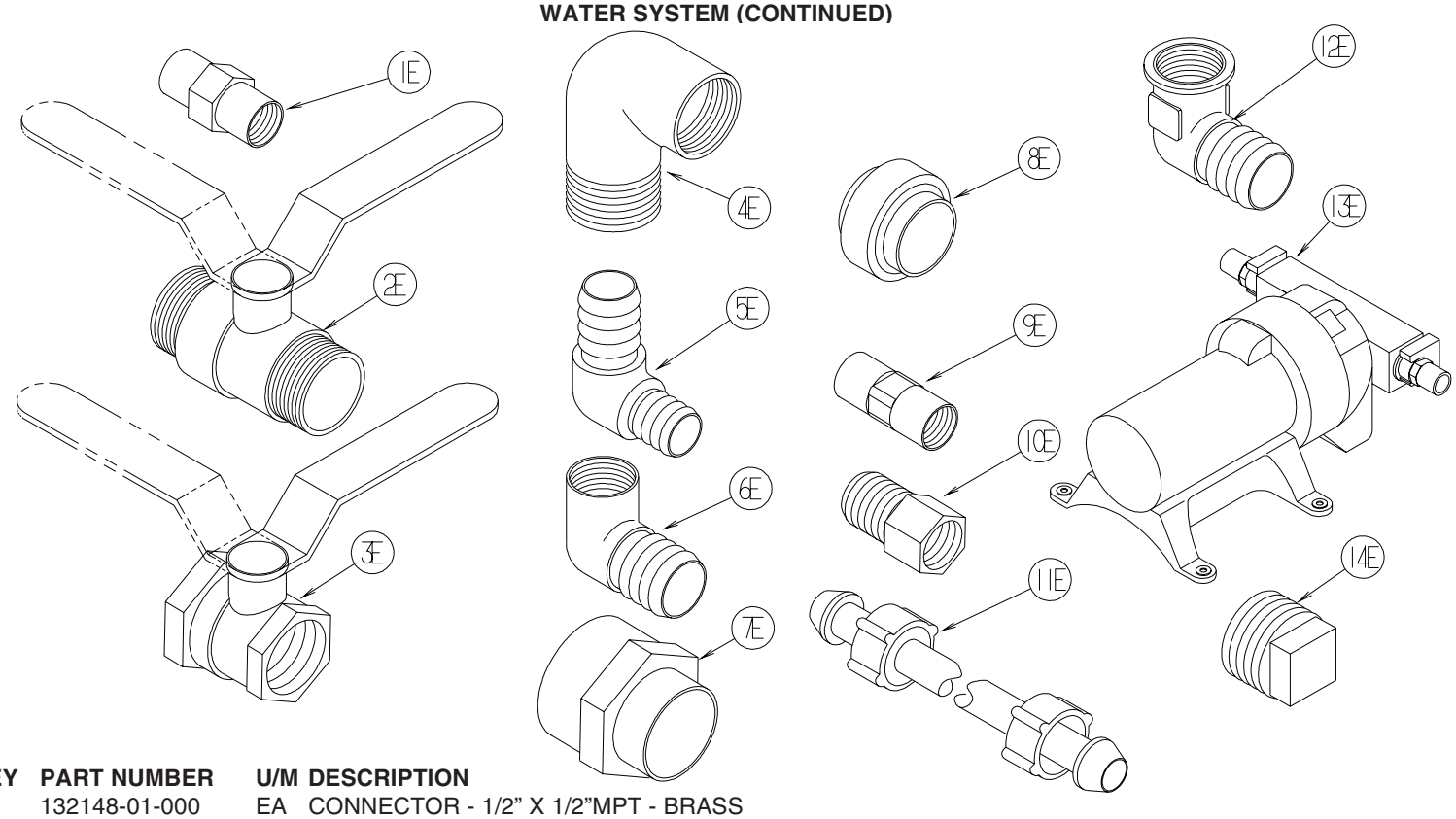

KEY	PART NUMBER	U/M	DESCRIPTION
1E	132148-01-000	EA	CONNECTOR - 1/2” X 1/2”MPT - BRASS
2E	132483-01-000	EA	VALVE/BALL - 1" - THREADED ENDS
3E	132483-02-000	EA	VALVE/BALL - 1/2" - BRASS - FPT
4E	132484-01-000	EA	ELBOW - 90 DEGREE - 1MPT X 1FPT - PLASTIC
5E	132781-01-000	EA	ELBOW - 1.3" BARB X 1.3" BARB - 90 DEGREE - PLASTIC
6E	132782-01-000	EA	ELBOW - 1"FPT X 1.3" BARB - 90 DEGREE - PLASTIC
7E	133835-01-000	EA	ADAPTER - REDUCING - 1 1/2" X 1 1/4"
8E	133889-01-000	EA	UNION - 1 1/2 DOUBLE SLIP - PVC
9E	135386-01-000	EA	NIPPLE - 1/2"
10E	136333-01-000	EA	ADAPTER - BRASS - 1/2"MPT X 1/2"FPT
11E	140821-01-000	EA	TUBE - WATER SUPPLY - 3/8" X 24"
11E	140821-02-000	EA	TUBE - WATER SUPPLY - 3/8" X 30"
11E	140821-03-000	EA	TUBE - WATER SUPPLY - 3/8" X 36"
11E	140821-04-000	EA	TUBE - WATER SUPPLY - 3/8" X 48"
11E	140821-05-000	EA	TUBE - WATER SUPPLY - 3/8" X 54"
11E	140821-06-000	EA	TUBE - WATER SUPPLY - 3/8" X 60"
11E	140821-07-000	EA	TUBE - WATER SUPPLY - 3/8" X 72"
11E	140821-08-000	EA	TUBE - WATER SUPPLY - 1/2" X 24"
11E	140821-09-000	EA	TUBE - WATER SUPPLY - 1/2" X 36"
11E	140821-10-000	EA	TUBE - WATER SUPPLY - 1/2" X 48"
12E	142812-01-000	EA	ELBOW - BRASS - 1/2"MPT X 1/2"FPT
13E*	144215-01-000	EA	PUMP - WATER - 5.7 GPM - W/1/2" MPT
*	144215-02-000	EA	STRAINER - WATER PUMP
14E	145609-01-000	EA	PLUG - BRASS - 1/2" MPT/HEX HEAD

***COMPONENT PARTS LISTED LATER IN THIS GROUP**

COPYRIGHT © 2006 WINNEBAGO INDUSTRIES INC.

WATER & SEWAGE GROUP (CONTINUED)

WATER SYSTEM (CONTINUED)

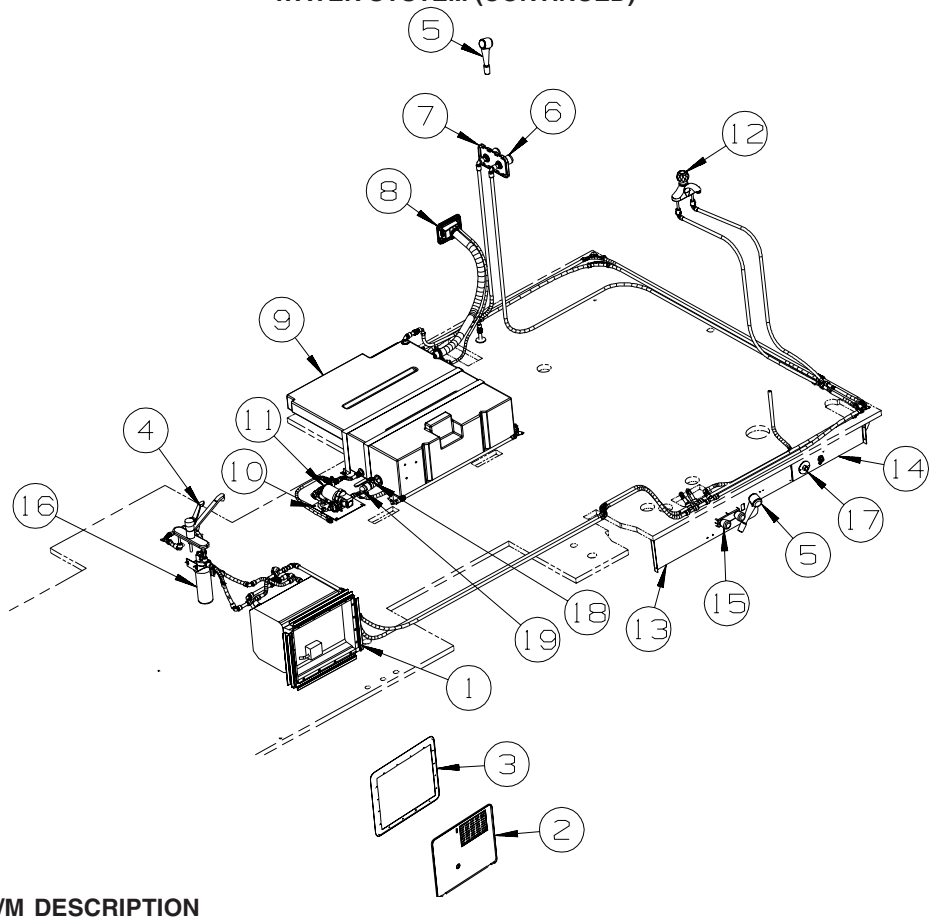

KEY	PART NUMBER	U/M	DESCRIPTION
1*	051391-03-000	EA	WATER HEATER G6A-8E ELECTRONIC IGNITION
2	052009-06-000	EA	DOOR - WATER HEATER - BRIGHT WHITE - 18" X 14.6"
	076767-03-000	EA	CABLE - STAINLESS STEEL - 18.5"
3	152239-01-01A	EA	FLANGE/MOUNTING/RECESSED - 19.3" X 15.8" - BRIGHT WHITE
4	149164-01-01A	EA	FAUCET - GALLEY - SINGLE CONTROL - CHROME
5	131383-01-02A	EA	SHOWER HEAD - W/60" HOSE & BRACKET - WHITE
6	075241-07-000	EA	FAUCET - SHOWER CONTROL - CHROME
7	075606-03-000	EA	PANEL - FAUCET SHOWER - SOFT WHITE
	057671-16-000	EA	COVER - SCREW - #8 - SOFT WHITE
8	137169-01-01A	EA	WATER FILL/GRAVITY - W/DOOR - W/O LOCK - BRIGHT WHITE
9	155664-02-000	EA	TANK - WATER - 36 GALLON - W/FITTINGS
	042989-04-000	EA	FITTING - SPINWELD - 3/8"FPT - PLASTIC
	042989-08-000	EA	FITTING - SPINWELD - 1"FPT - PLASTIC
10	149477-02-02B	EA	PANEL - WATER PUMP - E-COATED
10	140364-01-01A	EA	FOAM - PAD - .5" X 8" X 8"
11*	098607-01-000	EA	PUMP - WATER - W/.5" MPT FITTING - FLOW 2.8 GPM
12	152311-01-01A	EA	FAUCET - LAVATORY - SINGLE CONTROL - CHROME
13	147775-02-12B	EA	PANEL - SERVICE CENTER - BRIGHT WHITE
14	147776-02-12B	EA	PANEL - SERVICE CENTER - BRIGHT WHITE
15*	075241-06-000	EA	FAUCET/SHOWER -.5"MPT W/1.9" INLET PIPES- EXTERIOR/BRT WHT
16	087200-01-000	EA	FILTER - WATER PURIFICATION
	087200-02-000	EA	CARTRIDGE - WATER FILTER
17	010230-06-000	EA	FILL - CITY WATER - W/CHECK VALVE - MPT - BRUSHED ALUM
18	132483-01-000	EA	VALVE/BALL - 1" - THREADED ENDS
19	132484-01-000	EA	ELBOW - 90 DEGREE - 1MPT X 1FPT - PLASTIC

***COMPONENT PARTS LISTED LATER IN THIS GROUP**

COPYRIGHT © 2006 WINNEBAGO INDUSTRIES INC.

WATER & SEWAGE GROUP (CONTINUED)

COMPONENT PARTS FOR WATER SYSTEM

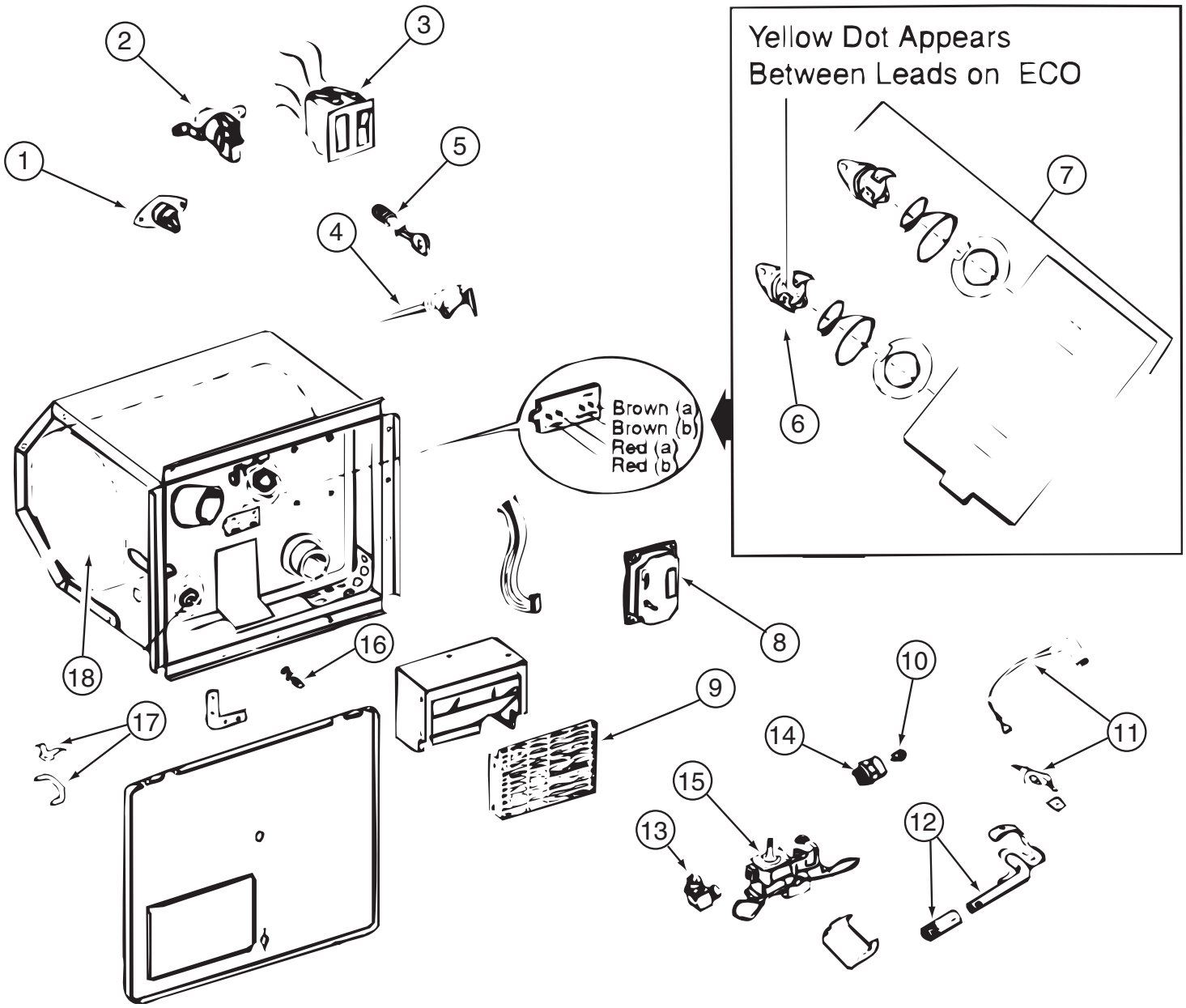

051391-03-000

KEY	PART NUMBER	U/M	DESCRIPTION	VENDOR NO.
3	051393-01-701	EA	SWITCH - REMOTE - W/LIGHT	91959
4	051391-01-704	EA	VALVE-RELIEF, 1/2" FITTING	91604
5	051391-01-705	EA	FASTENER-CAMLOCK	92609
6	051391-04-701	EA	THERMOSTAT 12V DC-120 PRESET	91470
7	051393-01-721	EA	THERMOSTAT W/ECO, 140 FRT MT	91447
9	051391-04-707	EA	KIT-EXHAUST, (FLUE & GASKET)	90960
10	051391-01-710	EA	ORIFICE-MAIN BURNER	92742
12	051391-04-703	EA	BURNER-MAIN/ELECTRONIC IG	91638
13	051391-01-714	EA	FITTING-ELBOW 45,3/8F X 3/8	MPT 1044
14	051391-03-700	EA	HOLDER-ORIFICE	91563
16	051391-01-715	EA	PLUG-DRAIN, 1 EA = 2 PER PKG	91857
17	051391-01-700	EA	HINGE KIT, (PIN & CLIP)	92568&92559
18	051391-04-706	EA	TANK-G6A-4E/6E/7E/8E-FRT.MT	91641
	051391-01-717	EA	GRILLE-WATER HEATER DOOR	92640
	051393-01-723	EA	SWITCH - THERMAL CUTOUT 2/PK	93853 NOW 93866
	051393-01-724	EA	BOARD-CIRCUIT,SPADE TERMINAL	93865
	051393-01-725	EA	ELECTRODE-SGL SPADE CONNECT.	93868
	051393-01-726	EA	VALVE/SOLENOID - W/O BRACKET	93870
	111129-01-711	EA	BRACKET-CORNER, SET OF FOUR	91928

CONTACT WINNEBAGO PARTS SALES FOR UNLISTED COMPONENT(S)

COPYRIGHT © 2006 WINNEBAGO INDUSTRIES INC.

WATER & SEWAGE GROUP (CONTINUED)

COMPONENT PARTS FOR WATER SYSTEM (CONTINUED)

075241-04-000, 075241-05-000, 075241-06-000

KEY	PART NUMBER	U/M	DESCRIPTION	VENDOR NO.
	075240-05-700	EA	CARTRIDGE - WASHERLESS	9-P42

098607-01-000

KEY	PART NUMBER	U/M	DESCRIPTION	VENDOR NO.
	098607-01-702	EA	DIAPHRAGM/DRIVE ASSEMBLY KIT	94-238-04
	098607-01-703	EA	VALVE KIT	94-232-00
	098607-01-705	EA	VALVE-CHECK, KIT	94-237-00
	098607-01-706	EA	HOUSING, W/SWITCH ONLY	94-231-20
	098607-01-707	EA	MOTOR W/BASEPLATE	11-148-04

COPYRIGHT © 2006 WINNEBAGO INDUSTRIES INC.

WINDOW & VENTS GROUP

WINDOW & VENT LAYOUT

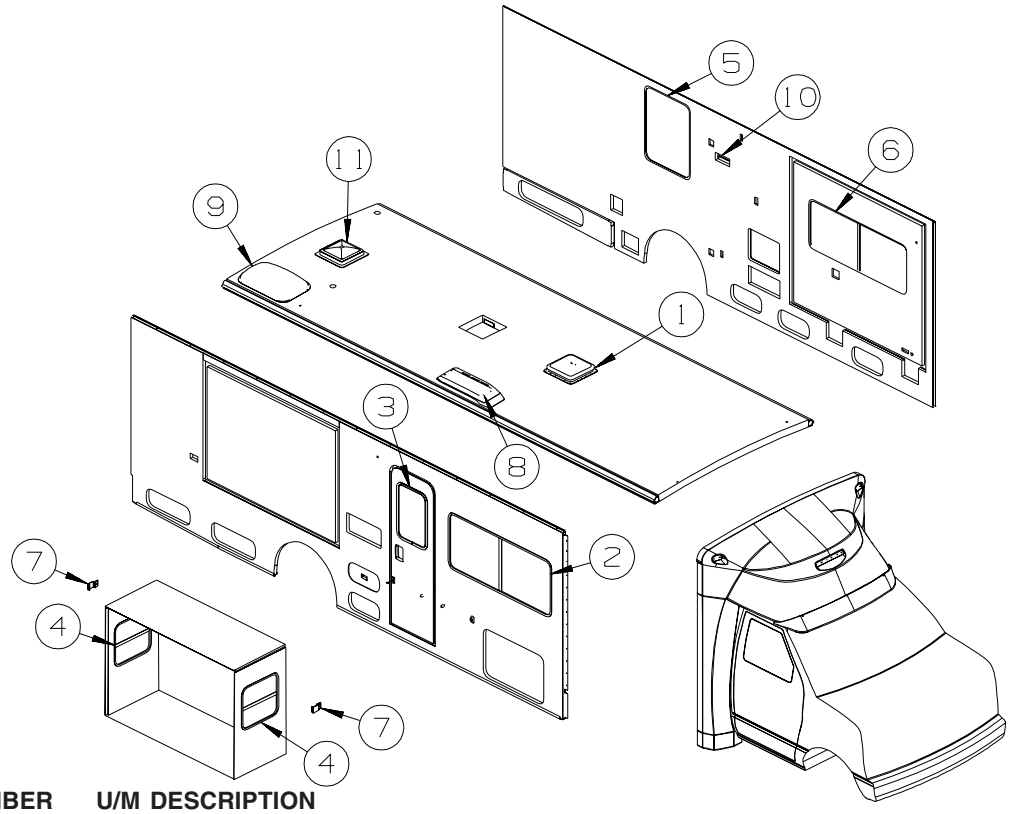

KEY	PART NUMBER	U/M	DESCRIPTION
1*	122882-01-01A	EA	VENT - ROOF - NONPOWERED - W/O INSIDE GARNISH
1	122882-07-01A	EA	GARNISH - ROOF VENT - 2.5" TO 4.1"
	009440-01-000	EA	GEAR/ARM - LIFT - ROOF VENT COVER
1*	123780-03-01A	EA	FANTASTIC VENT-3"/4"ROOF-W/FAN-W/O THERM/PWR LIFT/WHT CVR - VENT-POWER VENTILATOR
	009440-01-000	EA	GEAR/ARM - LIFT - ROOF VENT COVER - VENT-POWER VENTILATOR
2*	098647-23-02A	EA	WINDOW - PASS HORIZ SLIDER TINTED W/RETAINER-26.1" X 59.7"
2*	150648-03-01A	EA	WINDOW-HORIZ SLIDER/FLUSH/THERMO/RH - 26.3" X 59.9" - BLK - DUAL PANE
3	117053-02-F36	EA	WINDOW - PICTURE - W/O TRIM - 60% TINTING - 26.4" X 17"
	002181-25-000	EA	GLASS - PICTURE WINDOW - 25.8"W X 16.4"H
	087561-01-000	EA	SEAL - GLASS - EXTERIOR - .5" WIDE - VINYL BLACK
3	117054-02-03A	EA	TRIM/RETAINER - INSIDE - 16.9" X 26.2" - BLACK
3*	150651-01-01A	EA	WINDOW - STATIONARY/FLUSH/THERMO - 26.3" X 17" - BLACK - DUAL PANE
4*	098644-13-01A	EA	WINDOW - VERTICAL SLIDER W/TRIM - 19.8" X 20.9"
4*	150649-07-01A	EA	WINDOW - VERT SLIDER/FLUSH/THERMO - 19.8" X 20.8" - DUAL PANE
5*	112463-02-02A	EA	WINDOW - TIPOUT/ESCAPE - W/RETAINER - 36" X 27"
5*	150656-11-01A	EA	WINDOW - TIPOUT/FLUSH/ESCAPE/THERMO - 35.9" X 27" - DUAL PANE
6*	098647-47-02A	EA	WINDOW - DRVR HORIZ SLIDER W/TRIM-TINTED - 57.4"W X 23.6"H
6*	150648-07-01A	EA	WINDOW-HORIZ SLIDER/FLUSH/THERMO/LH - 23.8" X 57.7" - DUAL PANE
7	151905-01-01A	EA	CLIP/BRACKET - SCREEN RETAINER - BLACK
8	149508-01-02A	EA	CAP - ROOF/REFRIGERATOR VENT - WHITE
8	149508-02-02A	EA	BASE - ROOF/REFRIGERATOR VENT - BRIGHT WHITE
9	122193-01-02A	EA	PANEL - SKYLITE - INNER - W/LIGHT INDENTATION
9	138372-01-02B	EA	TRIM - CORNER - SKYLIGHT - E-COATED
9	138379-02-01A	EA	PANEL/SKYLIGHT OTR - RECT/4"H CTR DOME - 18.4"X 29.5"- WHT
10	147821-01-01A	EA	VENT - EXHAUST/RANGE HOOD - BRIGHT WHITE
10	147821-02-01A	EA	SHROUD - EXHAUST VENT/RANGE HOOD - BRIGHT WHITE
11*	122882-02-01A	EA	VENT - ROOF - W/FAN - W/O INSIDE GARNISH - UL
11*	122882-03-01A	EA	VENT - ROOF - W/FAN - W/O INSIDE GARNISH - CSA - CANADIAN
	009440-01-000	EA	GEAR/ARM - LIFT - ROOF VENT COVER
	048648-01-000	EA	MOTOR/ROOF VENT - W/RESISTER - 1/8"SHAFT - 12VOLT
	048649-01-000	EA	FAN BLADE - ROOF VENT - 6 BLADED - 6"RADIUS
11	122882-07-01A	EA	GARNISH - ROOF VENT - 2.5" TO 4.1"

***COMPONENT PARTS LISTED LATER IN THIS GROUP**

COPYRIGHT © 2006 WINNEBAGO INDUSTRIES INC.

WINDOW & VENTS GROUP (CONTINUED)

COMPONENT PARTS FOR WINDOW & VENT LAYOUT

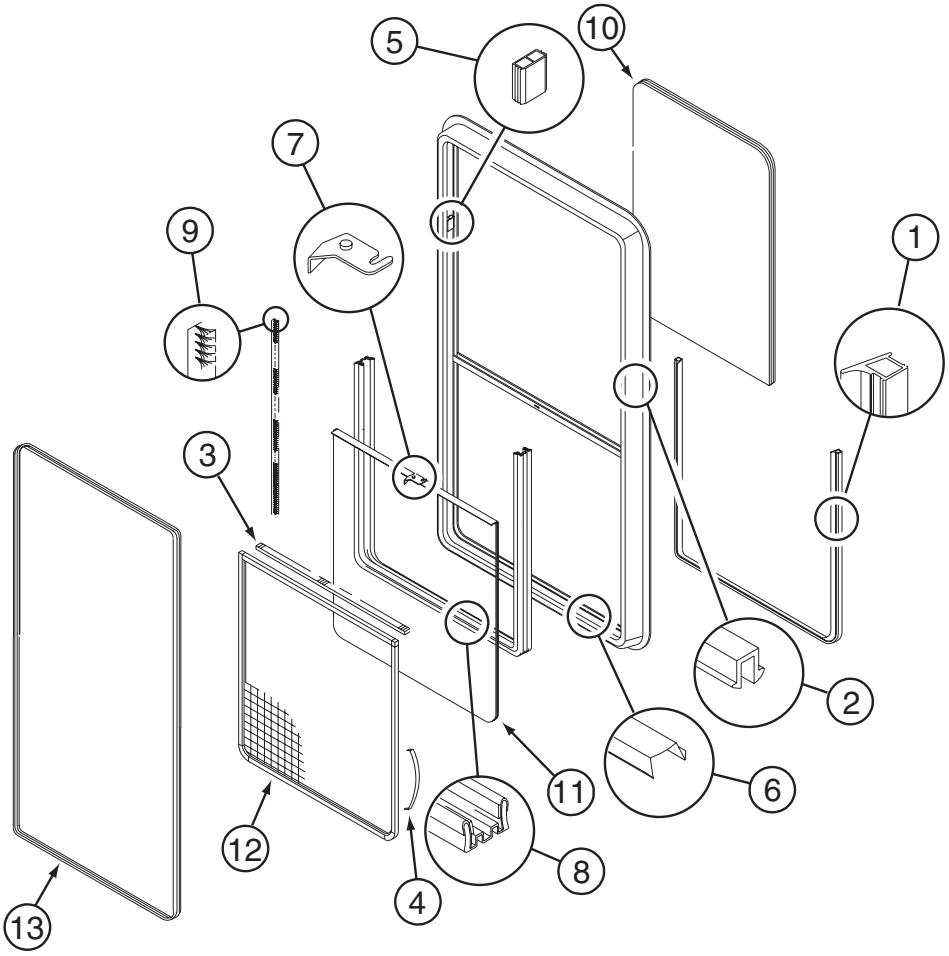

098644-13-01A

KEY	PART NUMBER	U/M	DESCRIPTION	VENDOR NO.
1	098644-01-716	FT	PLUG - FILLER	132-014470
2	098644-01-705	FT	GLAZING - STRIP	132-010231
3	098644-01-706	FT	WEATHERSTRIP - GLASS	171-010668
4	098644-01-713	EA	CLIP - SCREEN - METAL	226-016966
4	125582-01-701	EA	CLIP - SCREEN - PLASTIC	130-005153
5	098644-01-719	EA	STOP - SLIDER GLASS	132-014203
6	098644-01-710	FT	TRACK - SCREEN SPACER 12'	132-017135
7	098644-01-700	EA	LATCH - REPAIR KIT (BLACK)	B801-CK
7	098647-54-701	EA	LATCH - REPAIR KIT (RED)	B081-CK
8	098644-01-708	FT	CHANNEL - RUN PIERCED	122-016543
9	098644-01-711	FT	WEATHERSTRIP - SCREEN BLACK	171-016965
10	098644-13-700	EA	GLASS - STATIONARY	106-028698
11	098644-13-701	EA	GLASS - SLIDING W/SASH/LATCH	H702-G9
12	098644-13-702	EA	SCREEN ASM - W/SEALS/CLIPS	410-028663
13	098644-13-703	EA	RETAINER - TRIM	H702-60
	098644-01-717	FT	SPLINE - SCREEN	132-004716

COPYRIGHT © 2006 WINNEBAGO INDUSTRIES INC.

WINDOW & VENTS GROUP (CONTINUED)

COMPONENT PARTS FOR WINDOW & VENT LAYOUT (CONTINUED)

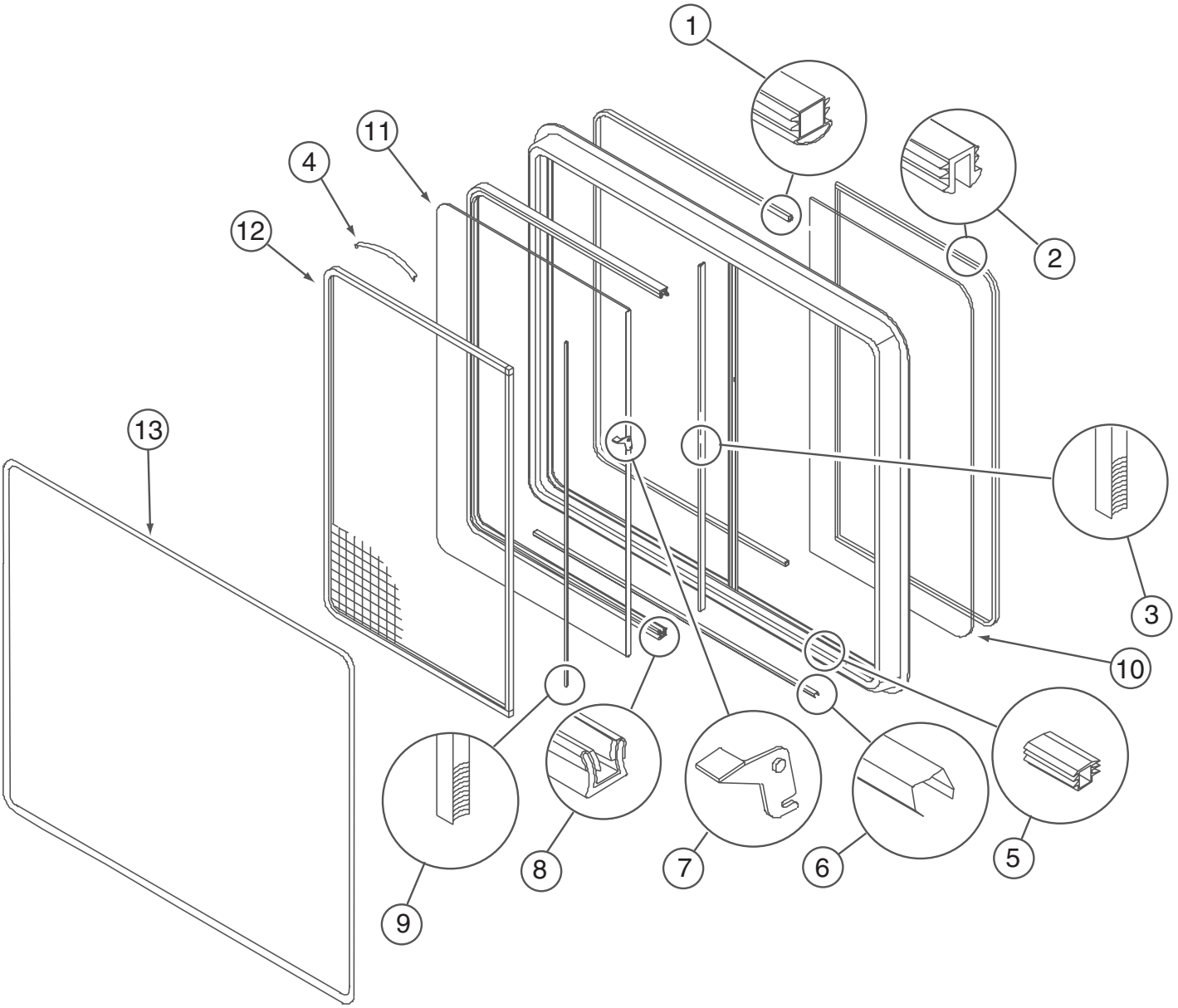

098647-23-02A

KEY	PART NUMBER	U/M	DESCRIPTION	VENDOR NO.
1	098644-01-716	FT	PLUG - FILLER	132-014470
2	098644-01-705	FT	GLAZING - STRIP	132-010231
3	098644-01-706	FT	WEATHERSTRIP - GLASS	171-010668
4	098644-01-713	EA	CLIP - SCREEN - METAL	226-016966
4	125582-01-701	EA	CLIP - SCREEN - PLASTIC	130-005153
5	098644-01-719	EA	STOP - SLIDER GLASS	132-014203
6	098644-01-710	FT	TRACK - SCREEN SPACER 12'	132-017135
7	098644-01-700	EA	LATCH - REPAIR KIT (BLACK)	B801-CK
7	098647-54-701	EA	LATCH - REPAIR KIT (RED)	B081-CK
8	098644-01-708	FT	CHANNEL - RUN PIERCED	122-016543
9	098644-01-711	FT	WEATHERSTRIP - SCREEN BLACK	171-016965
10	098647-23-703	EA	GLASS - STATIONARY	106-017622
11	098647-23-700	EA	GLASS SLIDING W/SASH & LATCH	H287-G9
12	098647-23-704	EA	SCREEN ASM - W/SEALS & CLIPS	410-019066
13	098647-22-701	EA	RETAINER - TRIM	H287-67
	098644-01-717	FT	SPLINE - SCREEN	132-004716

COPYRIGHT © 2006 WINNEBAGO INDUSTRIES INC.

WINDOW & VENTS GROUP (CONTINUED)

COMPONENT PARTS FOR WINDOW & VENT LAYOUT (CONTINUED)

098647-47-02A

KEY	PART NUMBER	U/M	DESCRIPTION	VENDOR NO.
1	098644-01-716	FT	PLUG - FILLER	132-014470
2	098644-01-705	FT	GLAZING - STRIP	132-010231
3	098644-01-706	FT	WEATHERSTRIP - GLASS	171-010668
4	098644-01-713	EA	CLIP - SCREEN - METAL	226-016966
4	125582-01-701	EA	CLIP - SCREEN - PLASTIC	130-005153
5	098644-01-719	EA	STOP - SLIDER GLASS	132-014203
6	098644-01-710	FT	TRACK - SCREEN SPACER 12'	132-017135
7	098644-01-700	EA	LATCH - REPAIR KIT (BLACK)	B801-CK
7	098647-54-701	EA	LATCH - REPAIR KIT (RED)	B081-CK
8	098644-01-708	FT	CHANNEL - RUN PIERCED	122-016543
9	098644-01-711	FT	WEATHERSTRIP - SCREEN BLACK	171-016965
10	098647-47-700	EA	GLASS - STATIONARY	106-025224
11	098647-47-701	EA	GLASS-SLIDING W/SASH & LATCH	H493-G9
12	098647-47-702	EA	SCREEN ASM - W/SEALS & CLIPS	410-025226
13	098647-47-704	EA	RETAINER - TRIM	H493-66
	098644-01-717	FT	SPLINE - SCREEN	132-004716

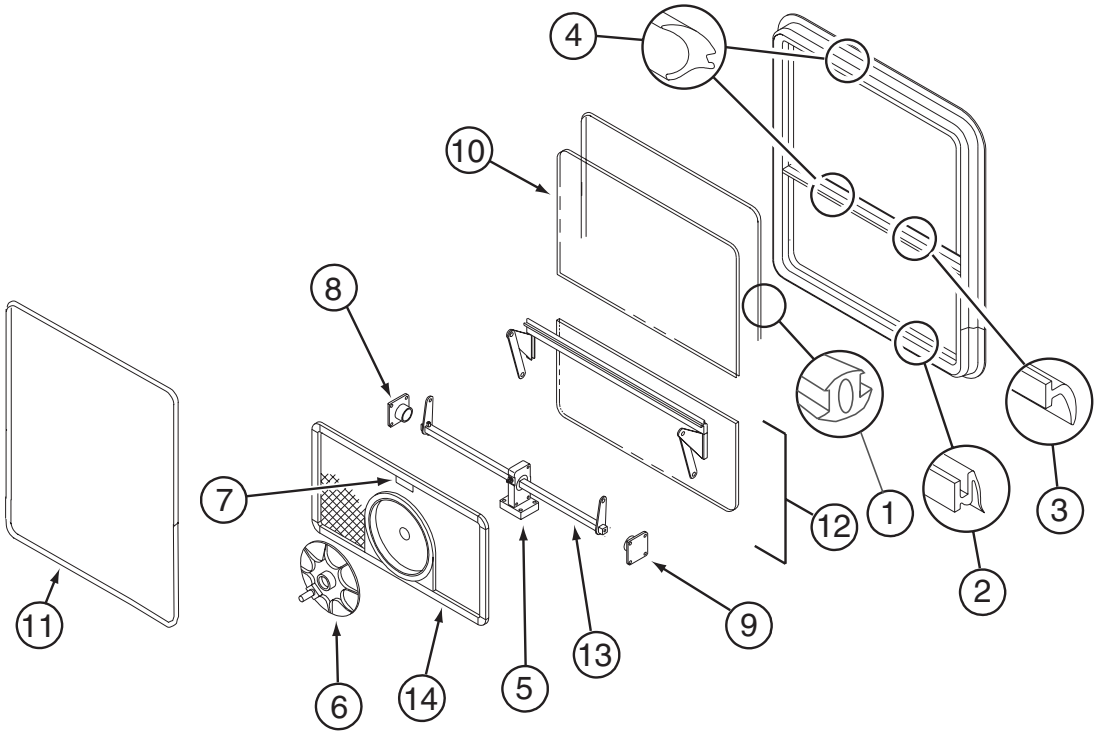

112463-02-02A

KEY	PART NUMBER	U/M	DESCRIPTION	VENDOR NO.
1	112463-02-702	EA	GLASS - STATIONARY	106-018809
2	100322-01-704	FT	TAPE-BUTYL	154-025932
3	100322-01-702	FT	VINYL-GLAZING, BUTYL	132-010723
4	116976-01-702	FT	FILLER PLUG	132-016065
5	100322-01-701	FT	SEAL-VENT	122-016071
6	112463-02-707	EA	SUPPORT - TORQUE BAR RH	132-015979
6	112463-02-708	EA	SUPPORT - TORQUE BAR LH	132-015978
7	112463-02-704	EA	OPERATOR & BAR ASSEMBLY	CH82-15
8	100322-01-702	FT	WEATHERSTRIP-HORIZ RAIL-148"	122-016071
9	112463-02-700	EA	RETAINER - TRIM	CH82-59
10	112463-02-705	EA	SCREEN ASM - W/SEALS & CLIPS	410-18812
11	112463-02-709	EA	FOAM TAPE - F/SCREEN	138-017617
12	112463-02-703	EA	VENT GLASS ASSEMBLY	CH82-G9
13	108929-01-706	EA	COVER - DRAIN SLOT	132-016064
14	112519-01-702	EA	OPERATOR/TRQ CTR SPRT-4 HOLE	410-016123
15	100322-01-718	EA	HANDLE-DIAL	410-016081

COPYRIGHT © 2006 WINNEBAGO INDUSTRIES INC.

WINDOW & VENTS GROUP (CONTINUED)

COMPONENT PARTS FOR WINDOW & VENT LAYOUT (CONTINUED)

122882-01-01A

KEY	PART NUMBER	U/M	DESCRIPTION	VENDOR NO.
	009440-01-000	EA	GEAR-ARM-ROOF VENT	705221K38
	064470-01-700	EA	COVER - VENT	J7291
	064470-01-701	EA	SLIDE BAR - VENT LID	JRP1291B
	122882-01-700	EA	HANDLE - CRANK - BLACK	90128
	122882-01-701	EA	SCREEN	JRP-1124-B
	122882-01-702	EA	HANDLE - CRANK - WHITE	JRP1031B

122882-02-01A, 122882-03-01A

KEY	PART NUMBER	U/M	DESCRIPTION	VENDOR NO.
	009440-01-000	EA	GEAR-ARM-ROOF VENT	705221K38
	048648-01-000	EA	MOTOR-12V NONVENTED 1/8 SFT	JRP2190 CSA W/RESIS
	048649-01-000	EA	FAN-PLAS-6 IN 6 BLADED	1976 PWR ROOF VENT
	064470-01-700	EA	COVER - VENT	J7291
	064470-01-701	EA	SLIDE BAR - VENT LID	JRP1291B
	110051-03-700	EA	SWITCH-BLACK/PUSH BUTTON	27-0164
	122882-01-700	EA	HANDLE - CRANK - BLACK	90128
	122882-01-701	EA	SCREEN	JRP-1124-B
	122882-01-702	EA	HANDLE - CRANK - WHITE	JRP1031B

COPYRIGHT © 2006 WINNEBAGO INDUSTRIES INC.

WINDOW & VENTS GROUP (CONTINUED)

COMPONENT PARTS FOR WINDOW & VENT LAYOUT (CONTINUED)

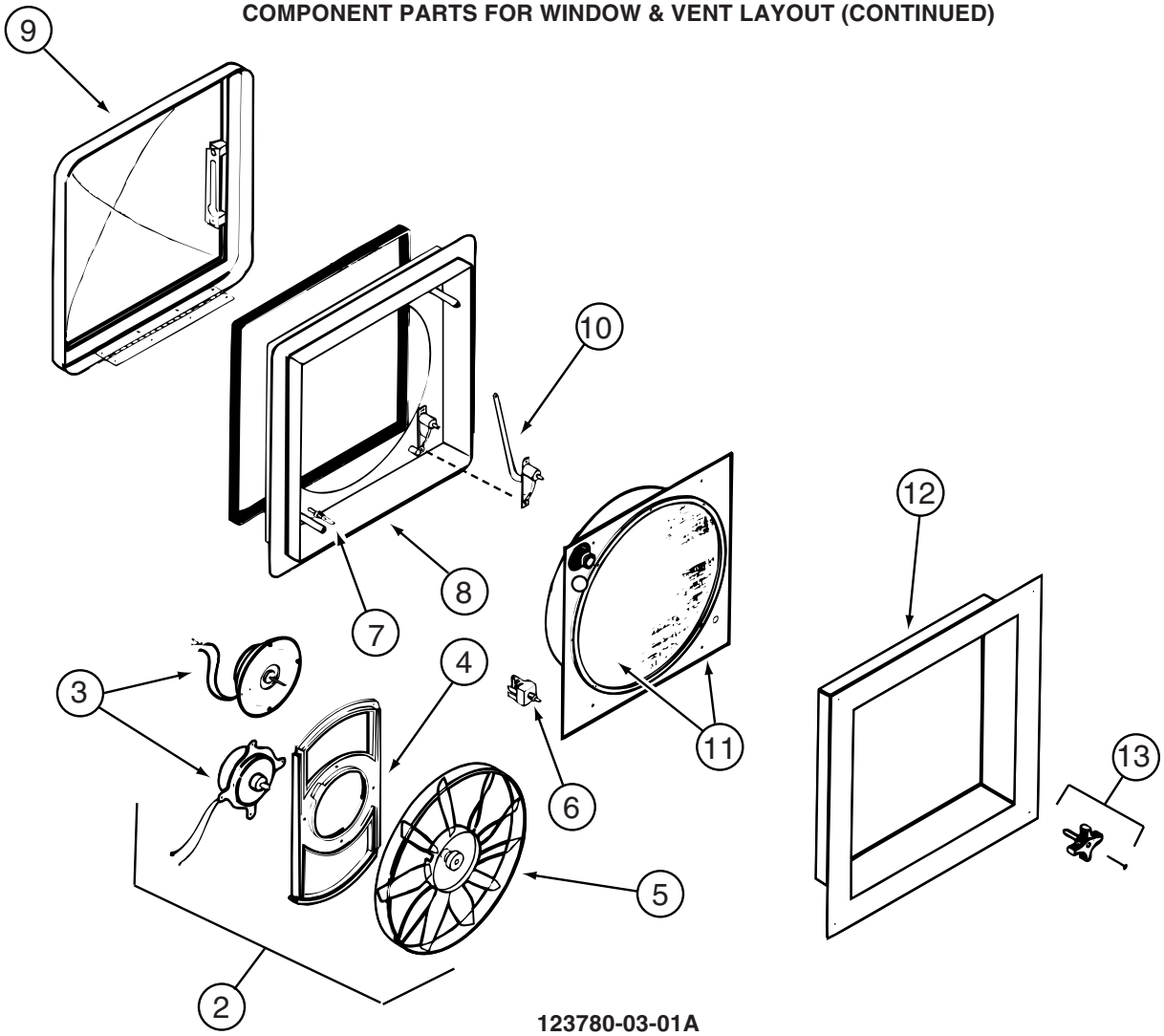

123780-03-01A

KEY	PART NUMBER	U/M	DESCRIPTION	VENDOR NO.
2	084079-11-700	EA	MOTOR & FAN BLADE W/BRACKET	K4017-09
3	084079-01-705	EA	MOTOR/EXT BRKT/FAN BLADE KIT	1080-00
4	084079-01-711	EA	MOTOR MOUNT (BOWTIE)	1015-00
5	084079-01-704	EA	BLADE-FAN	1138-00
6	084079-01-709	EA	SWITCH - MAIN - 3 SPEED	1031-05
7	084079-01-707	EA	SWITCH - SAFETY	1122-05
8	123780-05-700	EA	BASE/MAIN-BRT WHT W/GASKET	1010-81
9	123780-01-700	EA	COVER - VENT W/HINGE & SLIDE	1020K-81
11	123780-03-701	EA	SCREEN ASM 78-100MM W/SWITCH	1030BT-81
12	123780-03-700	EA	GARNISH - INT. 3"-4" BRT/WHT	2040-81
13	084079-01-703	EA	KNOB-LIFT	1140K-00
	084079-01-706	EA	PLUG, 12 VOLT	1090
	123780-01-702	EA	SCREEN INSERT (SCREEN RING)	K1035-81
			CONTACT WINNEBAGO PART SALES FOR UNLISTED COMPONENT(S)	

COPYRIGHT © 2006 WINNEBAGO INDUSTRIES INC.

WINDOW & VENTS GROUP (CONTINUED)

COMPONENT PARTS FOR WINDOW & VENT LAYOUT (CONTINUED)

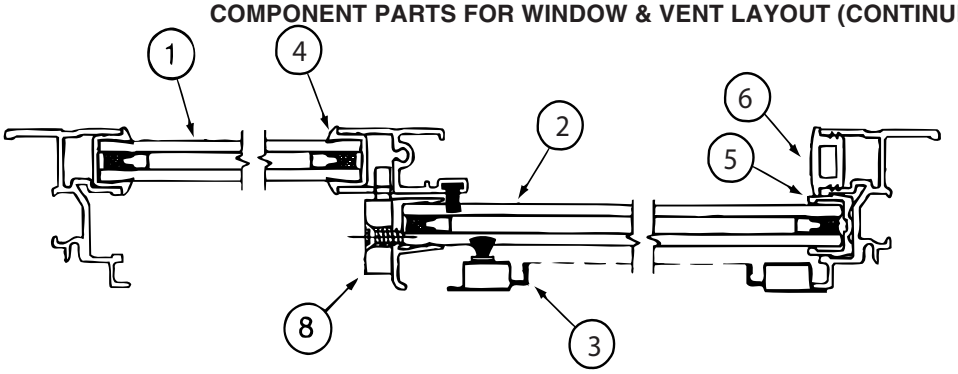

CROSS SECTION B-B

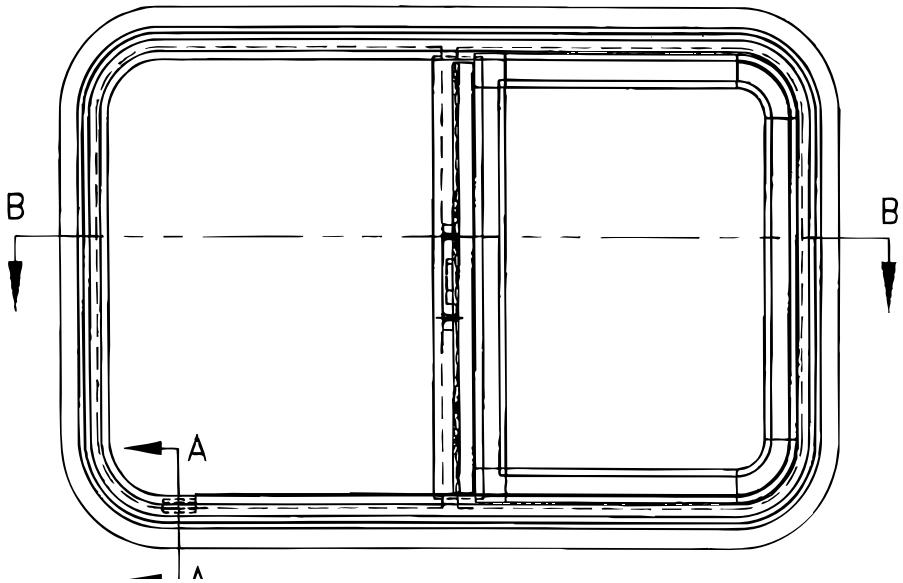

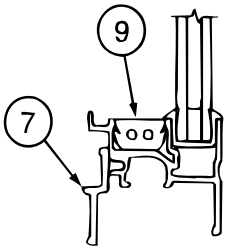

CROSS SECTION
A-A

150648-03-01A

KEY	PART NUMBER	U/M	DESCRIPTION	VENDOR NO
1	112795-68-700	EA	GLASS - STATIONARY	390-028353
2	150648-02-700	EA	GLASS-SLIDING W/SASH & LATCH	FH3009G8
3	150648-19-700	EA	SCREEN ASM	410-035332
4	112795-01-705	FT	VINYL - GLAZING	132-027331
5	151069-01-700	EA	CHANNEL-RUN, SLIDING	122-030627
6	150648-01-703	EA	PLUG - FILLER	132-030308
7	098647-22-701	EA	RETAINER - TRIM	H287-67
8	150648-01-700	EA	LATCH-HORIZONTAL SLIDE-BLK	FH3000-CK
8	150648-01-701	EA	LATCH-HORIZONTAL SLIDE-RED	FH3003-CK
9	150648-01-704	EA	SLIDE STOP	132-030866

150648-07-01A

KEY	PART NUMBER	U/M	DESCRIPTION	VENDOR NO
1	150648-07-701	EA	GLASS - STATIONARY	390-028314
2	150648-07-700	EA	GLASS-SLIDING W/SASH & LATCH	FH3000G8
3	150648-01-702	EA	SCREEN ASM	410-031156
4	112795-01-705	FT	VINYL - GLAZING	132-027331
5	151069-01-700	EA	CHANNEL-RUN, SLIDING	122-030627
6	150648-01-703	EA	PLUG - FILLER	132-030308
7	150648-01-707	EA	RETAINER - TRIM	H493-67
8	150648-01-700	EA	LATCH-HORIZONTAL SLIDE-BLK	FH3000-CK
8	150648-01-701	EA	LATCH-HORIZONTAL SLIDE-RED	FH3003-CK
9	150648-01-704	EA	SLIDE STOP	132-030866

COPYRIGHT © 2006 WINNEBAGO INDUSTRIES INC.

WINDOW & VENTS GROUP (CONTINUED)

COMPONENT PARTS FOR WINDOW & VENT LAYOUT (CONTINUED)

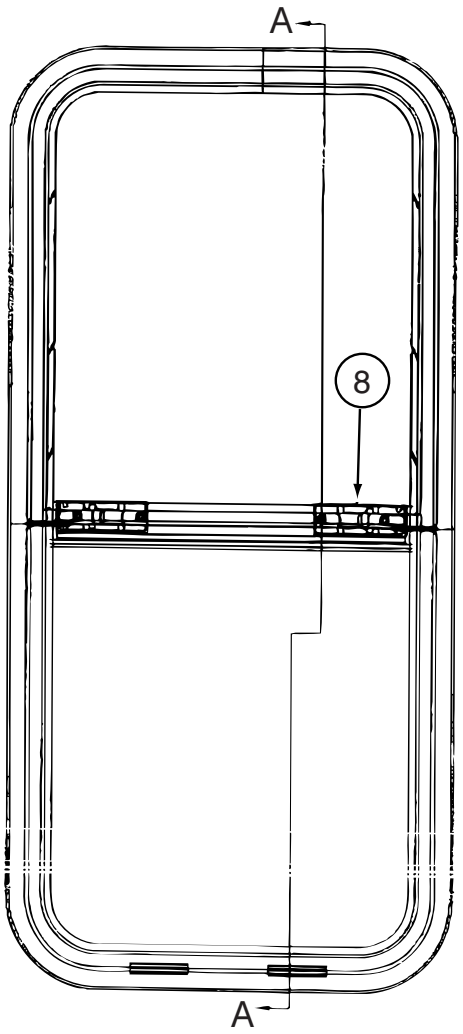

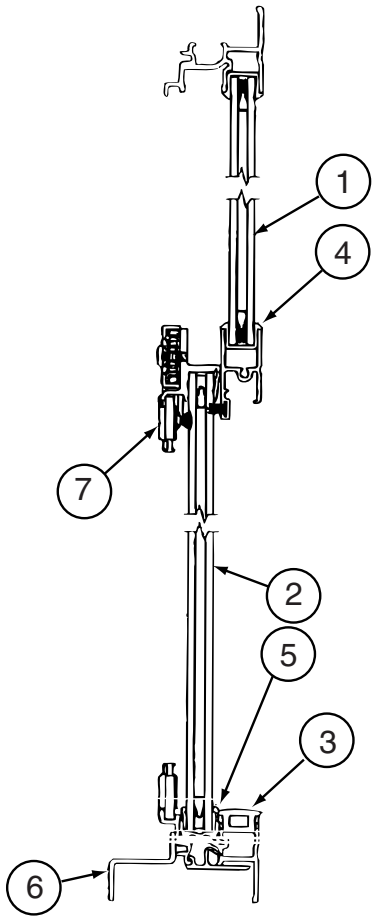

CROSS SECTION A-A

150649-07-01A

KEY	PART NUMBER	U/M	DESCRIPTION	VENDOR NO
1	150649-07-700	EA	GLASS - STATIONARY	390-028662
2	150649-07-702	EA	GLASS-SLIDING W/PULL & LATCH	FH3052G8
3	150648-01-703	FT	PLUG - FILLER	132-030308
4	112795-01-705	FT	VINYL - GLAZING	132-027331
5	151069-01-700	FT	CHANNEL-RUN, SLIDING	122-030627
6	150649-07-703	EA	RETAINER - TRIM	H702-61
7	150649-07-701	EA	SCREEN ASM	410-035475
8	150649-01-700	EA	LATCH-VERTICLE SLIDE-BLK	FH3016-CK

COPYRIGHT © 2006 WINNEBAGO INDUSTRIES INC.

WINDOW & VENTS GROUP (CONTINUED)

COMPONENT PARTS FOR WINDOW & VENT LAYOUT (CONTINUED)

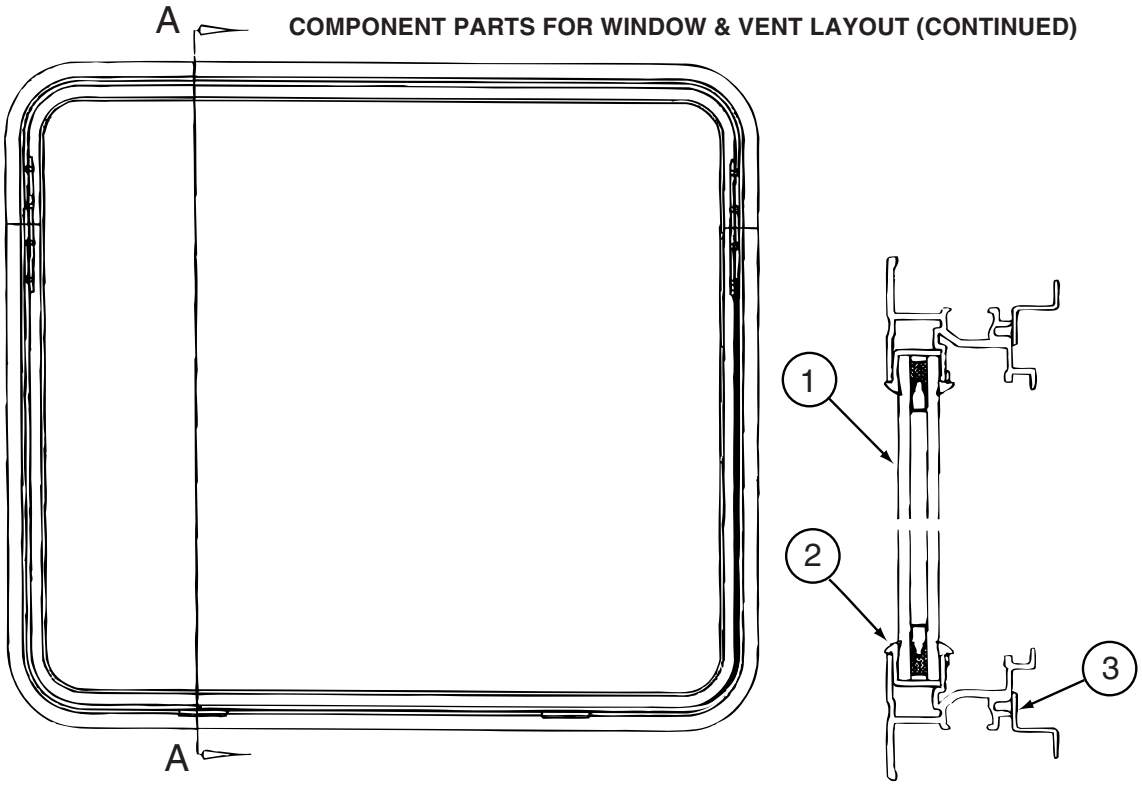

CROSS SECTION A-A

150651-01-01A

KEY	PART NUMBER	U/M	DESCRIPTION	VENDOR NO
1	113733-10-700	EA	GLASS-STATIONARY	390-028306
2	112795-01-705	FT	VINYL - GLAZING	132-027331
3	150651-01-700	EA	RETAINER - TRIM	H416-67

COPYRIGHT © 2006 WINNEBAGO INDUSTRIES INC.

WINDOW & VENTS GROUP (CONTINUED)

COMPONENT PARTS FOR WINDOW & VENT LAYOUT (CONTINUED)

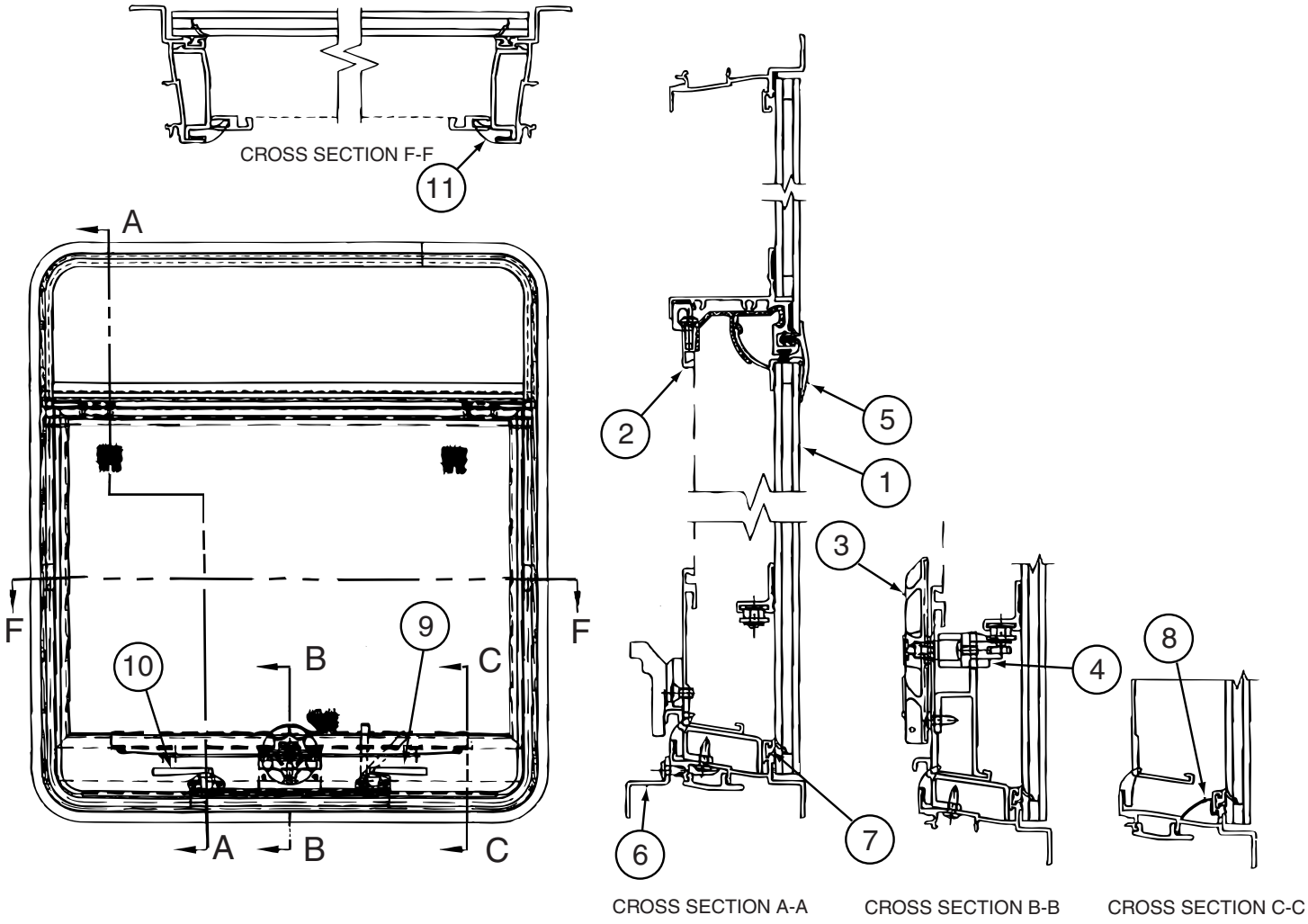

150656-11-01A

KEY	PART NUMBER	U/M	DESCRIPTION	VENDOR NO
1	150656-11-700	EA	GLASS-TIPOUT - W/HINGE/RAIL	DTH3047G8
2	150656-11-701	EA	SCREEN ASM	DTH3047-06
3	150656-02-702	EA	HANDLE-DIAL	410-016081E
4	150656-08-701	EA	OPERATOR - TIPOUT/LARGE	410-036141
5	150656-08-700	EA	SEAL/DUAL - WINDOW - 100"	132-030725
6	150656-11-702	EA	RETAINER - TRIM	DTH3047-56
7	100322-01-701	FT	SEAL-VENT	122-016071
8	150651-03-702	EA	COVER - DRAIN SLOT	132-030723
9	112898-06-707	EA	HANDLE/RH-EGRESS(SLD)ESC-RED	182-025911
10	112898-06-708	EA	HANDLE/LH-EGRESS(SLD)ESC-RED	182-025912
11	150656-09-700	FT	SEAL/SPONGE FOAM-SCREEN/FRME	140-035542

COPYRIGHT © 2006 WINNEBAGO INDUSTRIES INC.