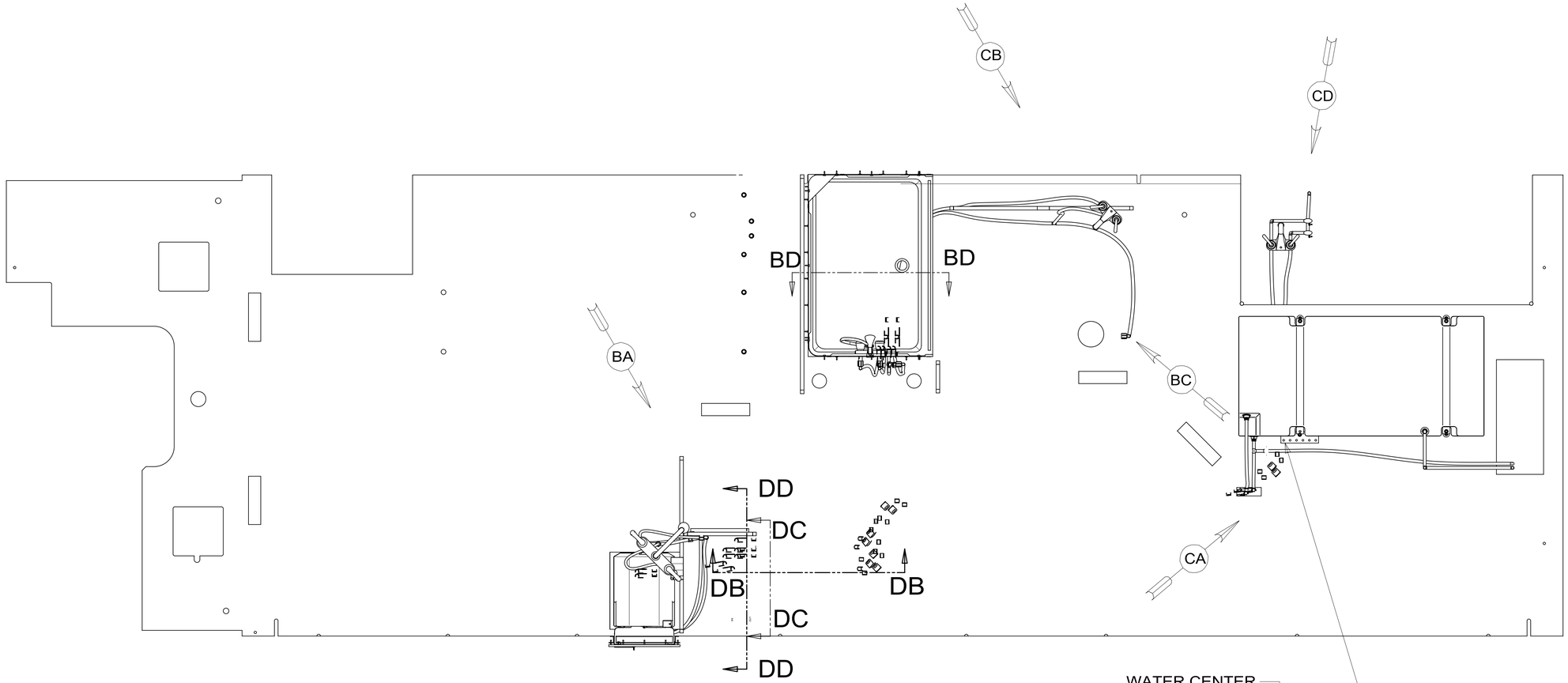

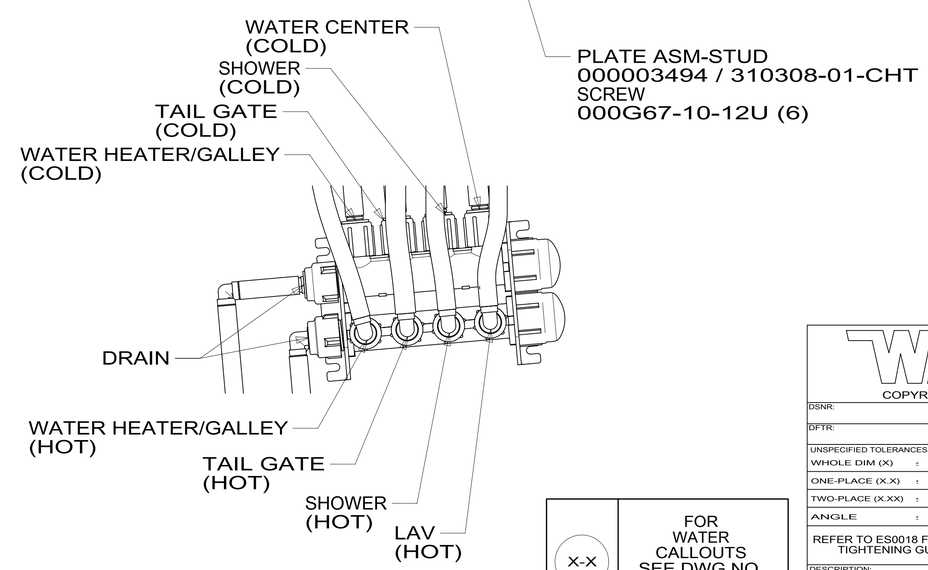

NOTES:

9. ALL CRIMP FITTINGS TO 3/4" PEX TUBING REQUIRE 3/4" CLAMP 000156247 / 326668-01-000.
8. ALL CRIMP FITTINGS TO 1/2" PEX TUBING REQUIRE 1/2" CLAMP 000156249 / 326670-01-000.
7. ALL CRIMP FITTINGS TO 5/8" FLEX TUBING REQUIRE 5/8" CLAMP 000156248 / 326669-01-000.
6. LABEL HOT AND COLD SUPPLY TUBES AND TAPE FITTING TO TUBE BEFORE CABINET SET TO PREVENT MOVEMENT.
5. ADD PIPE WRAP (LADDER SCRAP 110157-02-000) INSULATION.
4. ADD TEFLON TAPE 010405-02-000.
3. ALL TUBING TO BE SECURED AT 1200 INTERVALS MAXIMUM WITH CLAMP 010495-01-000 AND SCREW 000G67-10-12U OR EQUIVALENT.
2. TUBING TO BE INSTALLED WITH SUFFICIENT SLOPE TO PROVIDE DRAINAGE TO NEAREST VALVE.
1. PLASTIC FITTINGS TO BE SEALED WITH SEALANT 084456-01-000.

X-X

FOR WATER CALLOUTS SEE DWG NO. 000209446 / 303369-01-000

WINNEBAGO IND

COPYRIGHT 2018 WINNEBAGO INDUSTRIES, INC.

DSNR:
DFTR:

ALL DIMENSIONS ARE IN MILLIMETERS

UNSPECIFIED TOLERANCES:		
WHOLE DIM (X)	±	3
ONE-PLACE (X.X)	±	1.5
TWO-PLACE (X.XX)	±	0.50
ANGLE	±	1°

MATERIAL:

REFER TO ES0018 FOR FASTENER TIGHTENING GUIDELINES

WEIGHT: (LBS)

FIRST USED: (REF) 20 E29V

DESCRIPTION: WATER SYSTEM INSTL

SHEET: 1 OF 4

ITEM/PART NO: 000203185 / 33790501000

REV

REF:

1 16-Jul-2020

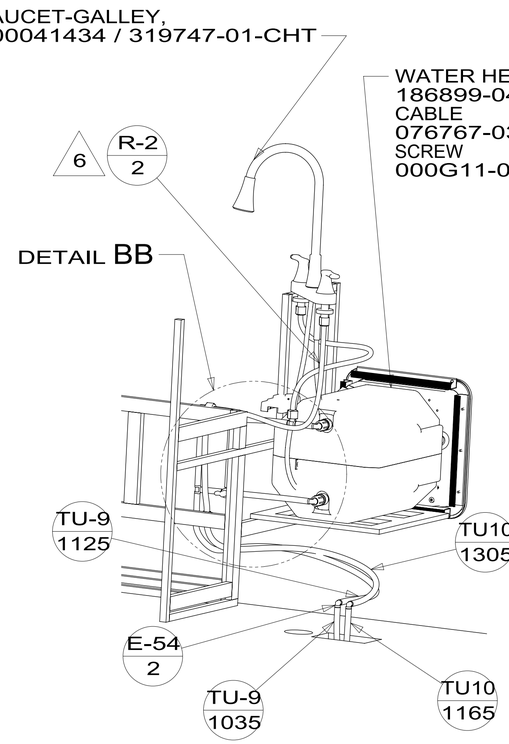

VIEW BA

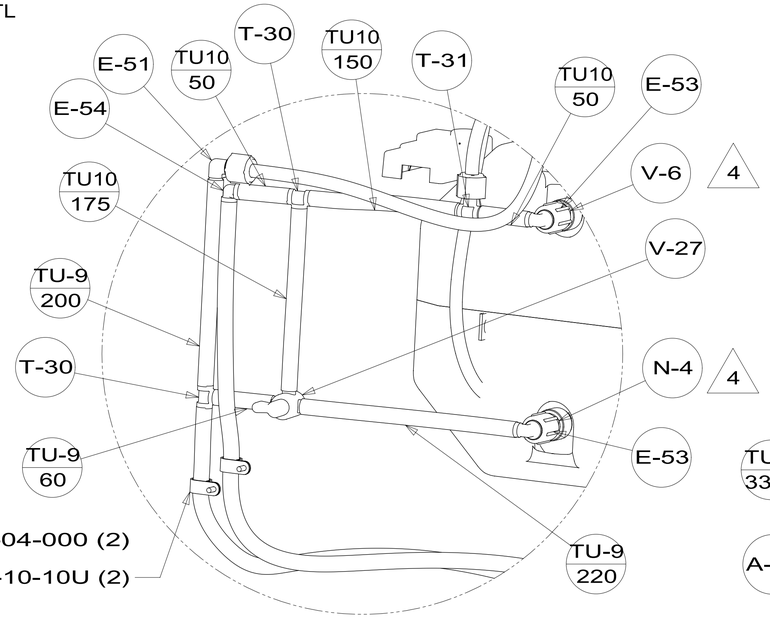

DETAIL BB
(SHOWN W/OUT CABINETS)

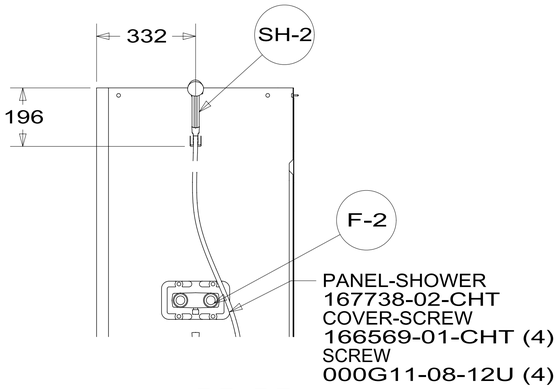

SECTION BD-BD

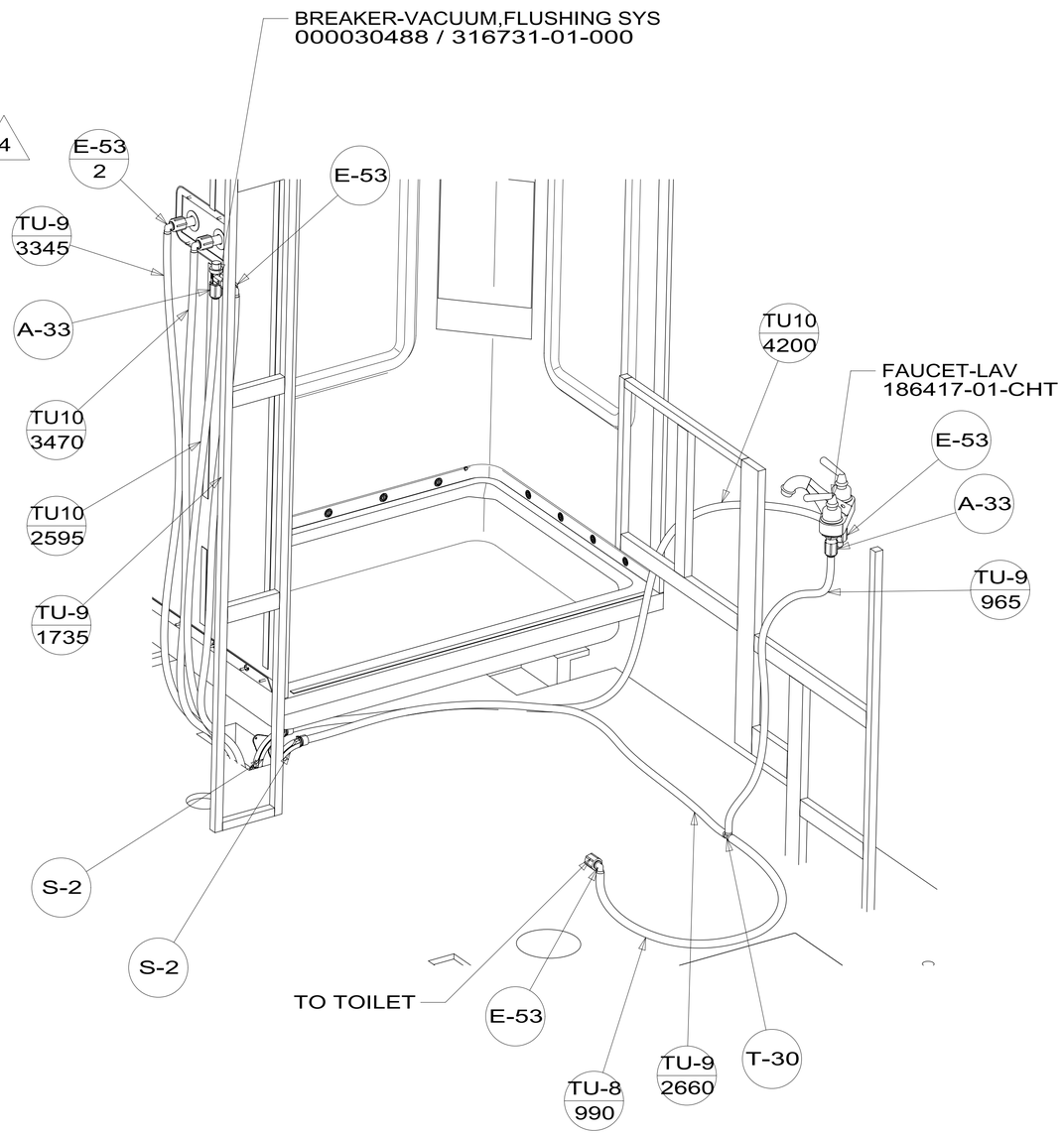

VIEW BC

DESCRIPTION:		
WATER SYSTEM INSTL		
SHEET: 2 OF 4	ITEM/PART NO: 000203185 / 33790501000	REV

16-Jul-2020

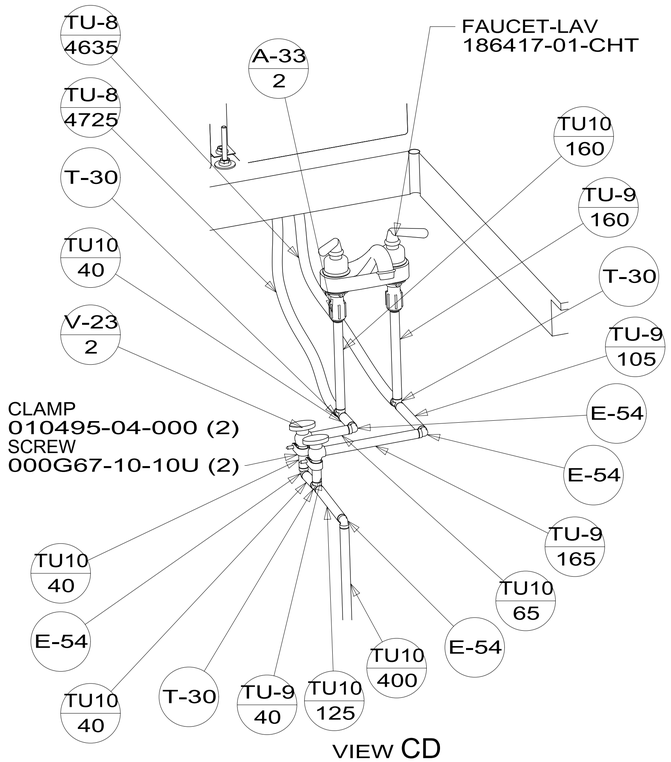

VIEW CD

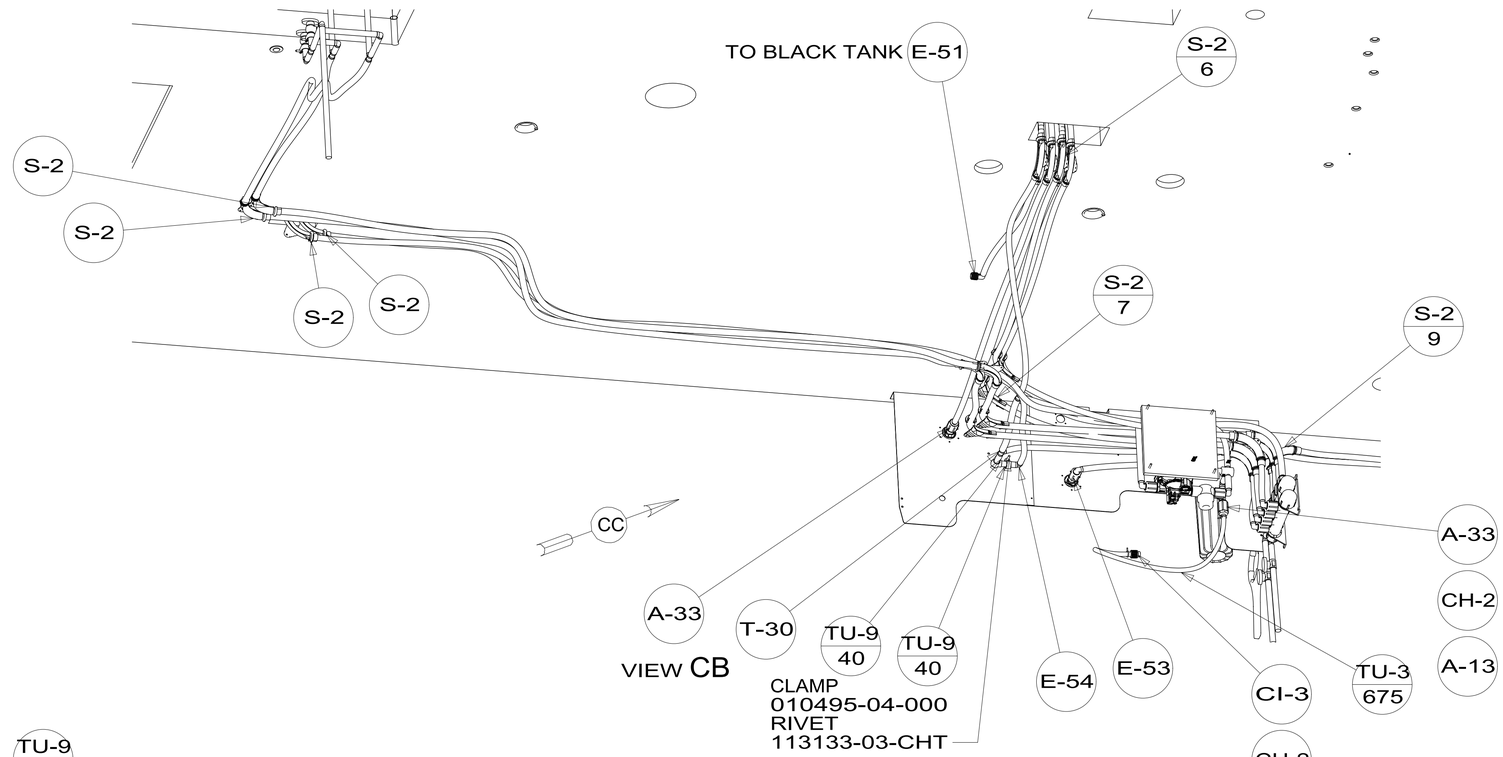

VIEW CB

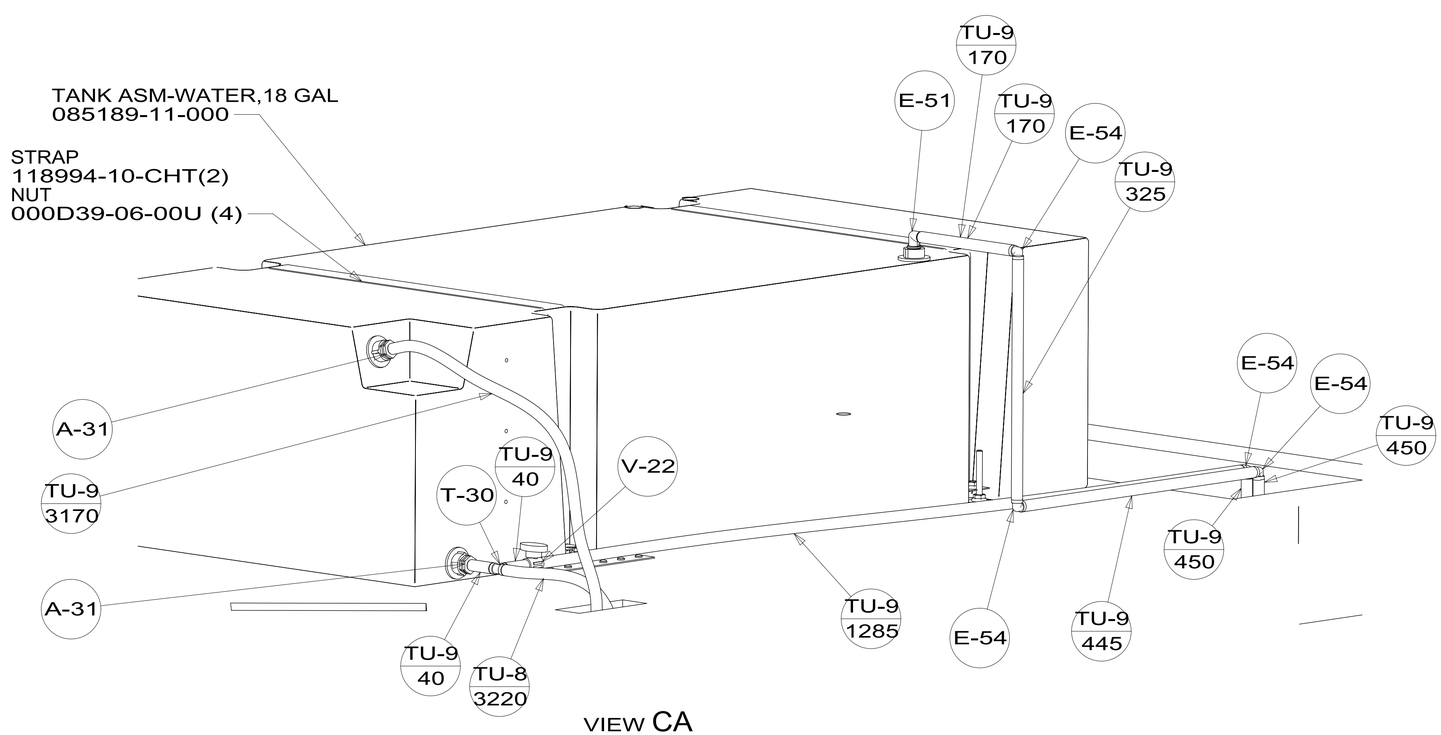

VIEW CA

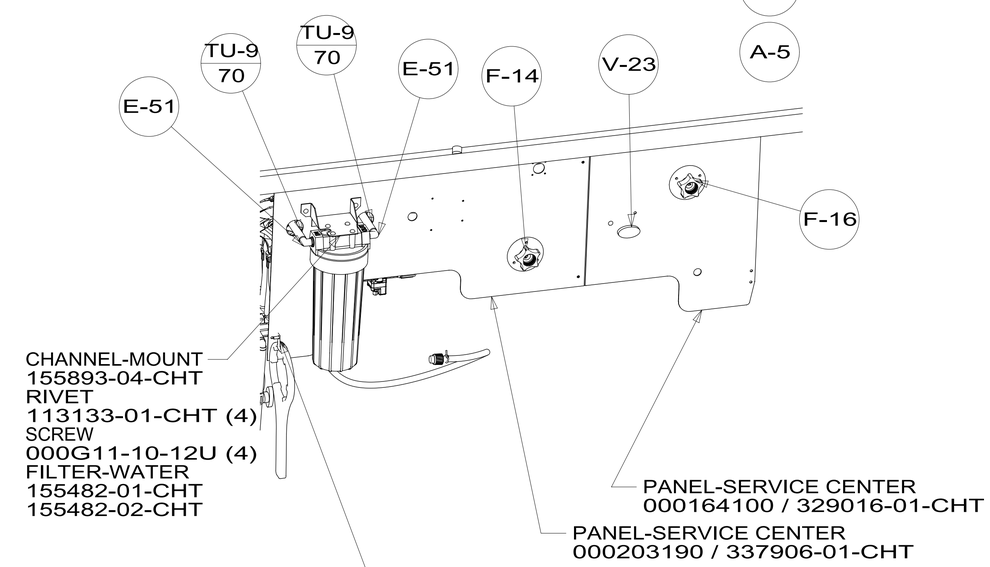

VIEW CC

DESCRIPTION:		
WATER SYSTEM INSTL		
SHEET: 3 OF 4	ITEM/PART NO: 000203185 / 33790501000	REV

16-Jul-2020

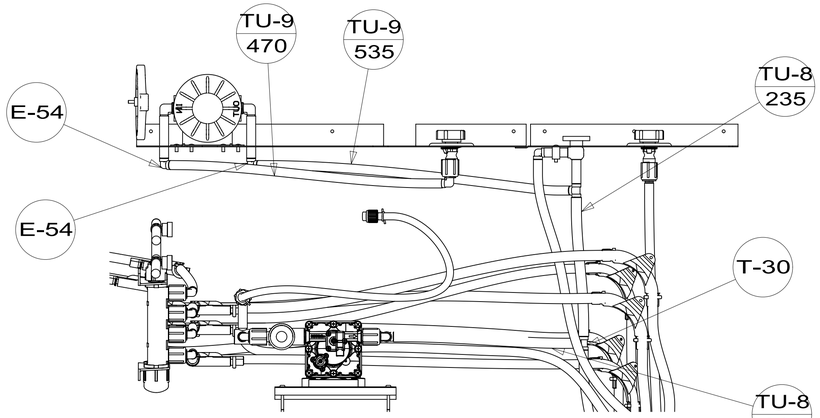

VIEW DA

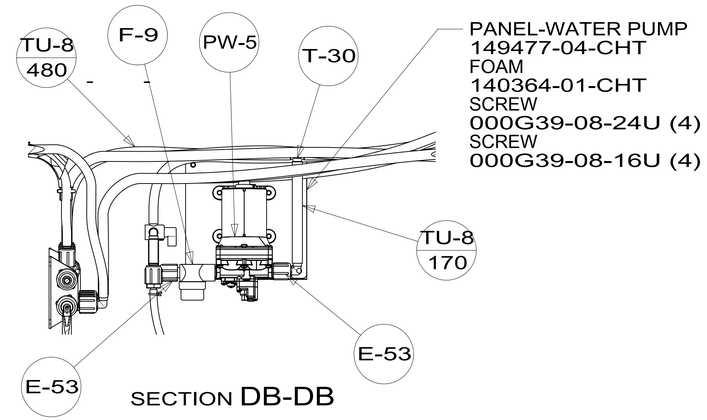

SECTION DB-DB

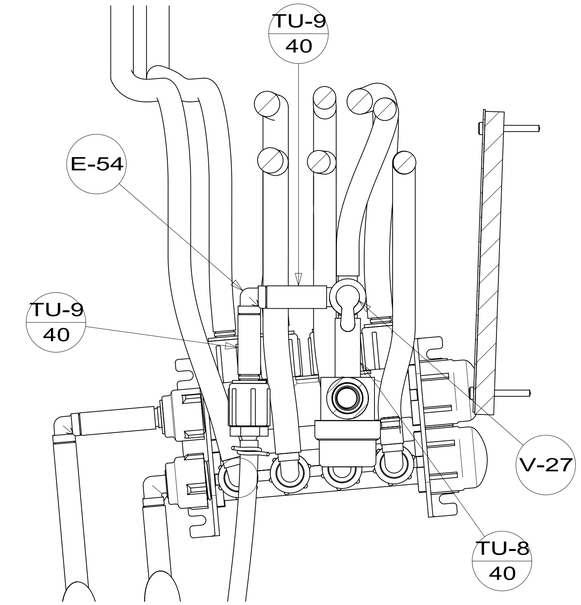

SECTION DC-DC

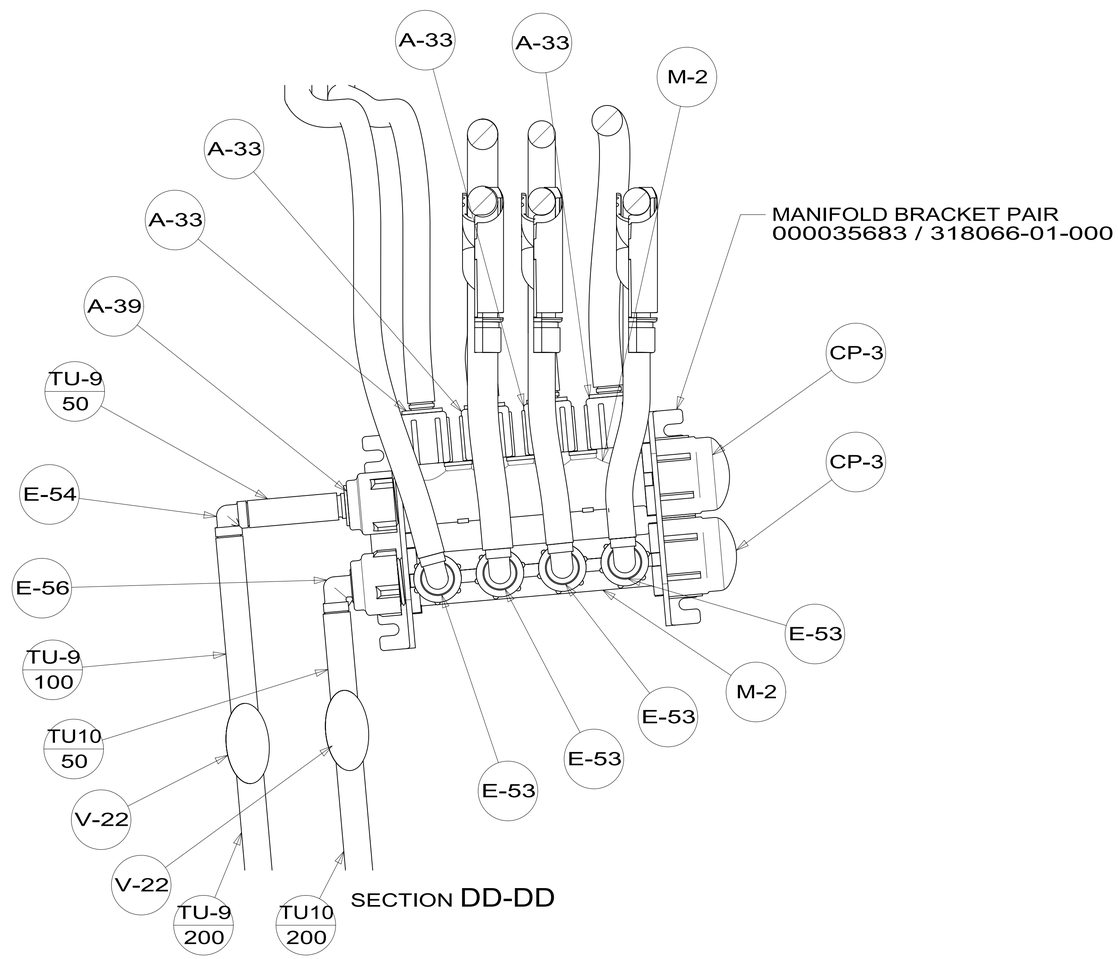

SECTION DD-DD

DESCRIPTION:		
WATER SYSTEM INSTL		
SHEET: 4 OF 4	ITEM/PART NO: 000203185 / 33790501000	REV

16-Jul-2020