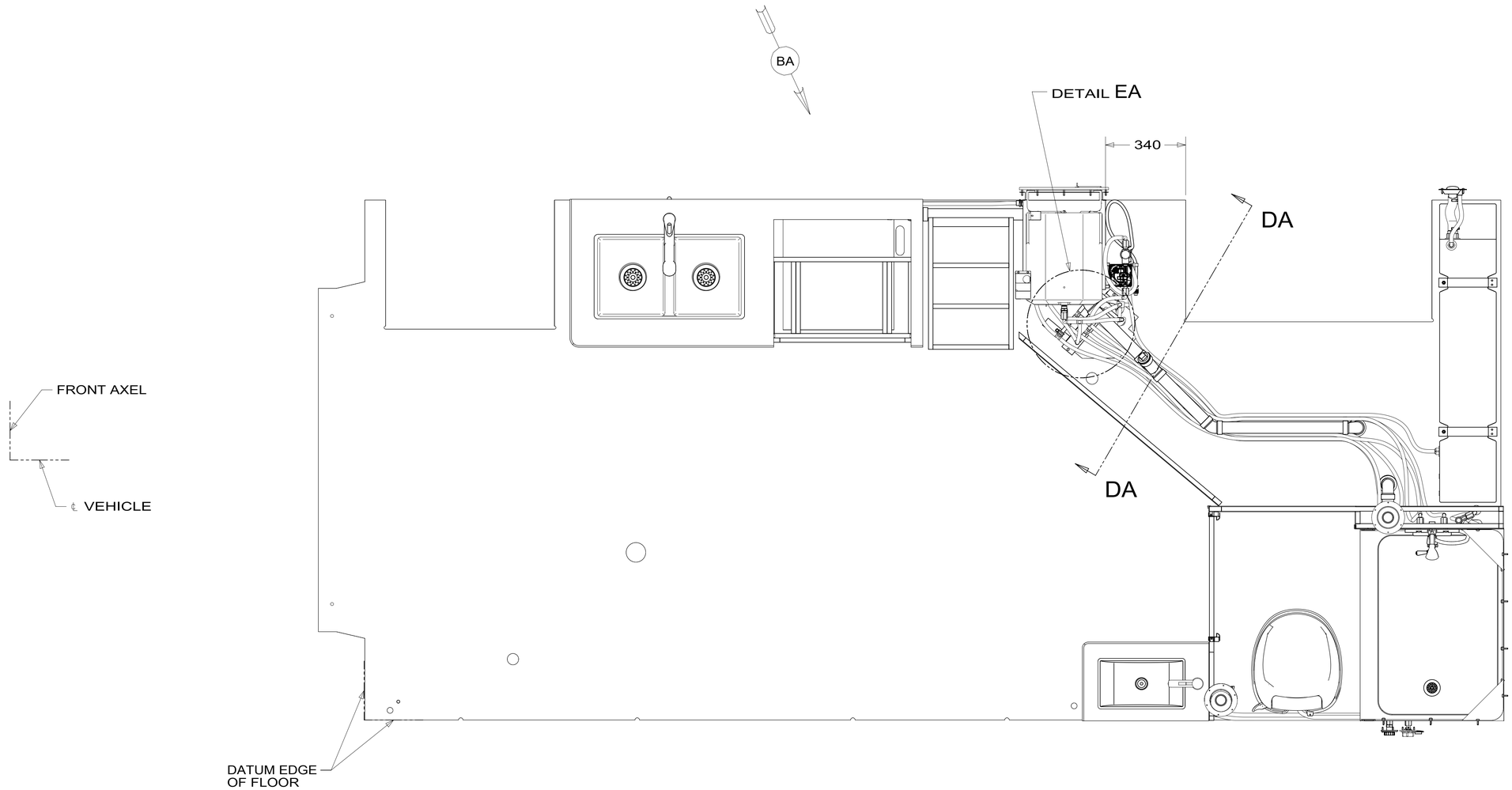

9. ALL CRIMP FITTINGS TO 3/4" PEX TUBING REQUIRE 3/4" CLAMP 000156247 / 326668-01-000.

8. ALL CRIMP FITTINGS TO 1/2" PEX TUBING REQUIRE 1/2" CLAMP 000156249 / 326670-01-000.

7. ALL CRIMP FITTINGS TO 5/8" FLEX TUBING REQUIRE 5/8" CLAMP 000156248 / 326669-01-000.

6 LABEL HOT AND COLD SUPPLY TUBES AND TAPE FITTING TO TUBE BEFORE CABINET SET TO PREVENT MOVEMENT.

5 ADD PIPE WRAP (LADDER SCRAP 110157-02-000) INSULATION.

4 ADD TEFLON TAPE 010405-01-000.

3. ALL TUBING TO BE SECURED AT 1200 INTERVALS MAXIMUM WITH CLAMP 010495-01-000 AND SCREW 000G67-10-12U OR EQUIVALENT.

2. TUBING TO BE INSTALLED WITH SUFFICIENT SLOPE TO PROVIDE DRAINAGE TO NEAREST VALVE.

1. PLASTIC FITTINGS TO BE SEALED WITH SEALANT 084456-01-000.

NOTES:

X-X

FOR WATER CALLOUTS SEE DWG NO. 000209446 / 303369-01-000

WINNEBAGO IND

COPYRIGHT 2018 WINNEBAGO INDUSTRIES, INC.

DSNR:

DFTR:

ALL DIMENSIONS ARE IN MILLIMETERS

UNSPECIFIED TOLERANCES:		
WHOLE DIM (X)	±	3
ONE-PLACE (X.X)	±	1.5
TWO-PLACE (X.XX)	±	0.50
ANGLE	±	1°

MATERIAL:

REFER TO ES0018 FOR FASTENER TIGHTENING GUIDELINES

WEIGHT: (LBS) -

FIRST USED: (REF) 20 C24F

DESCRIPTION: WATER SYSTEM INSTL

SHEET: 1 OF 5

ITEM/PART NO: 000188383 / 33542901000

REV

REF:

1 24-Jul-2019

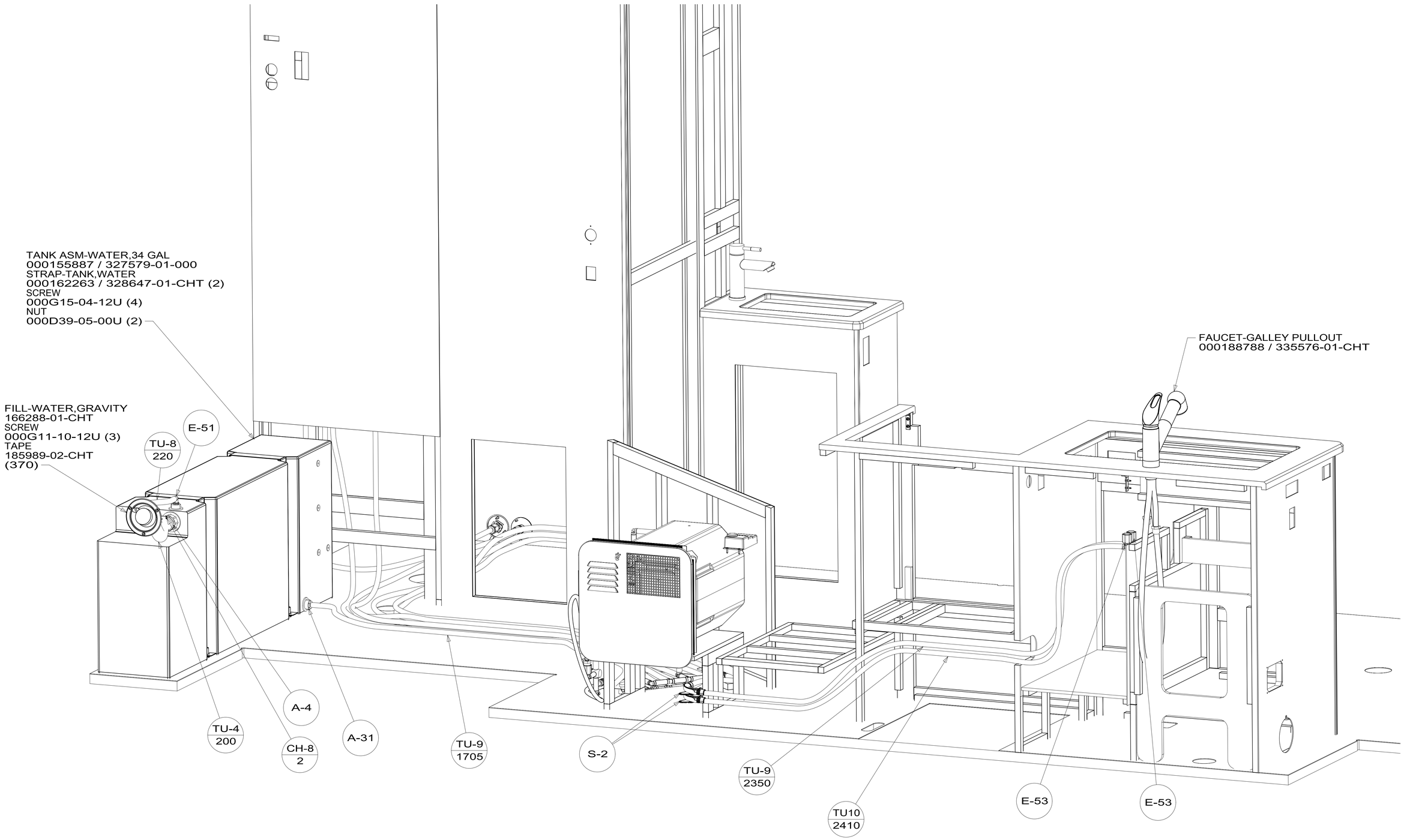

VIEW BA

DESCRIPTION:		
WATER SYSTEM INSTL		
SHEET: 2 OF 5	ITEM/PART NO: 000188383 / 33542901000	REV

24-Jul-2019

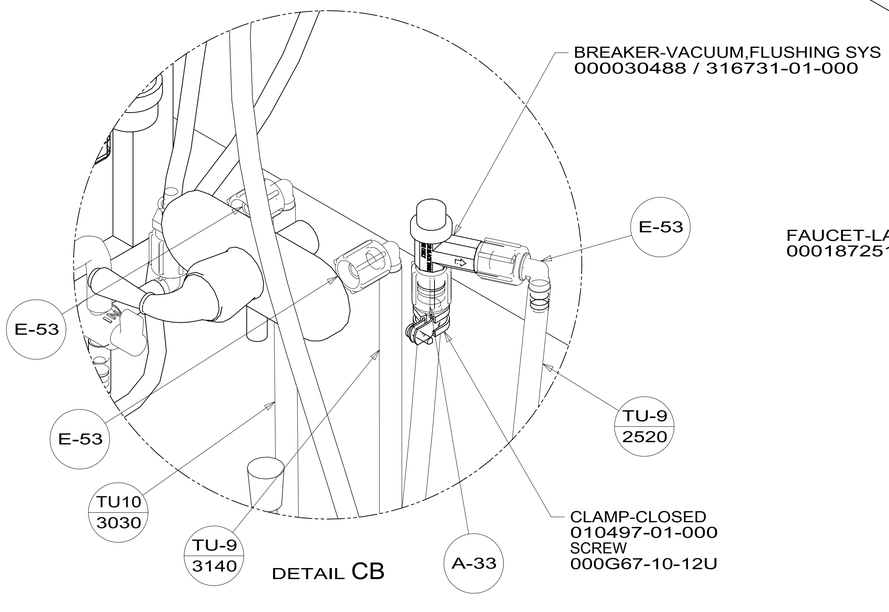

DETAIL CB

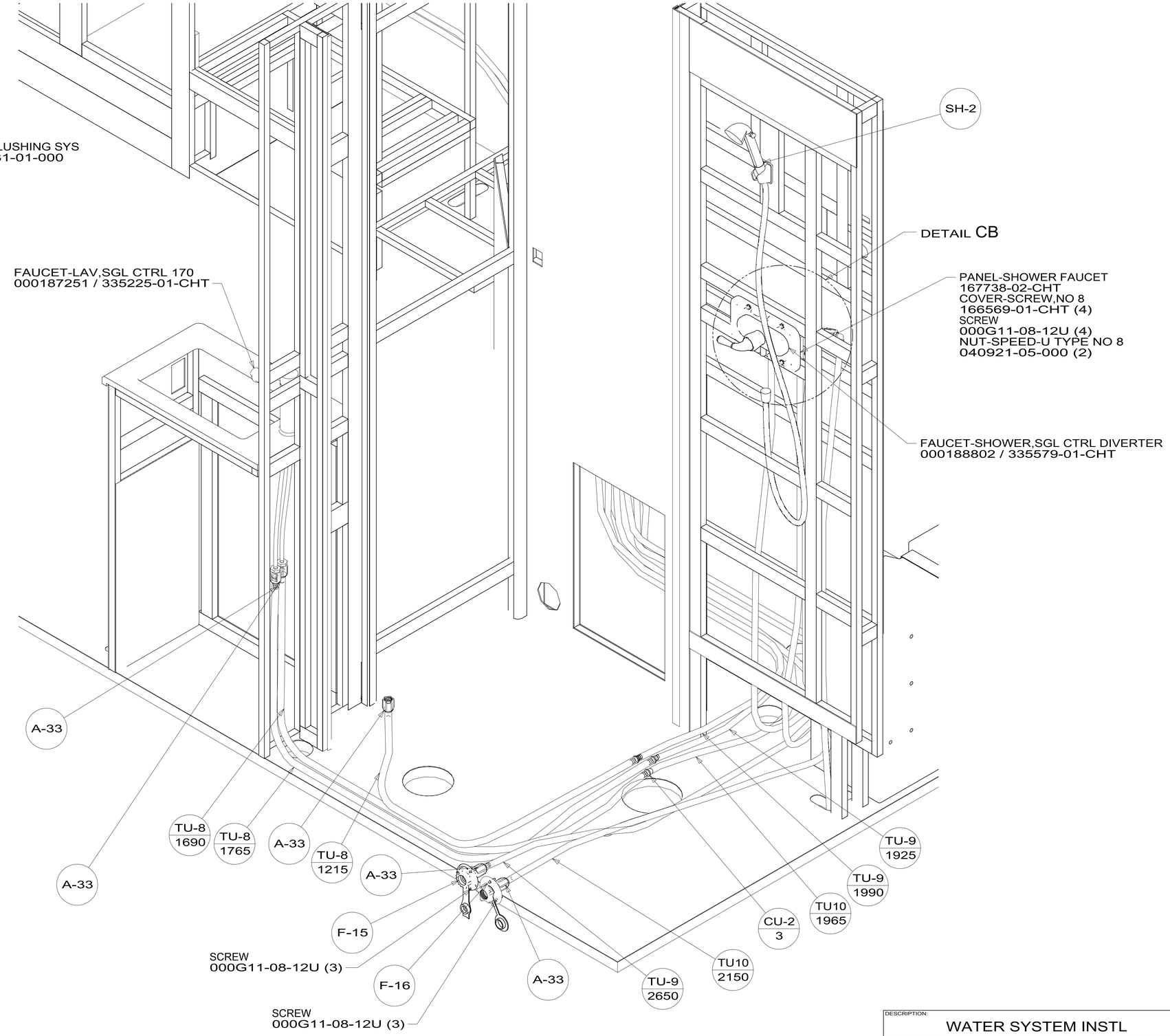

VIEW CA

DESCRIPTION:		
WATER SYSTEM INSTL		
SHEET: 3 OF 5	ITEM/PART NO: 000188383 / 33542901000	REV

24-Jul-2019

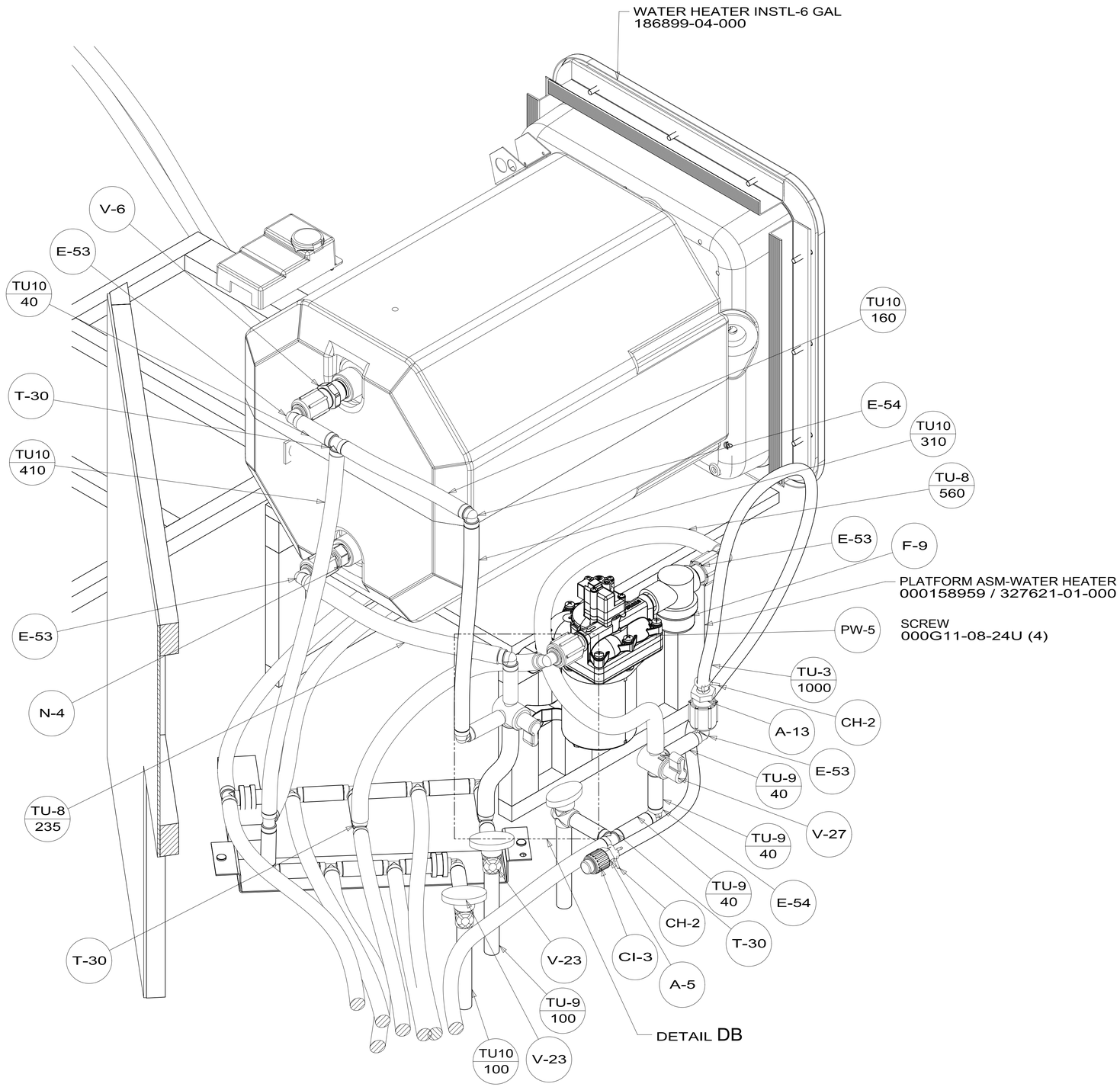

SECTIONT DA-DA

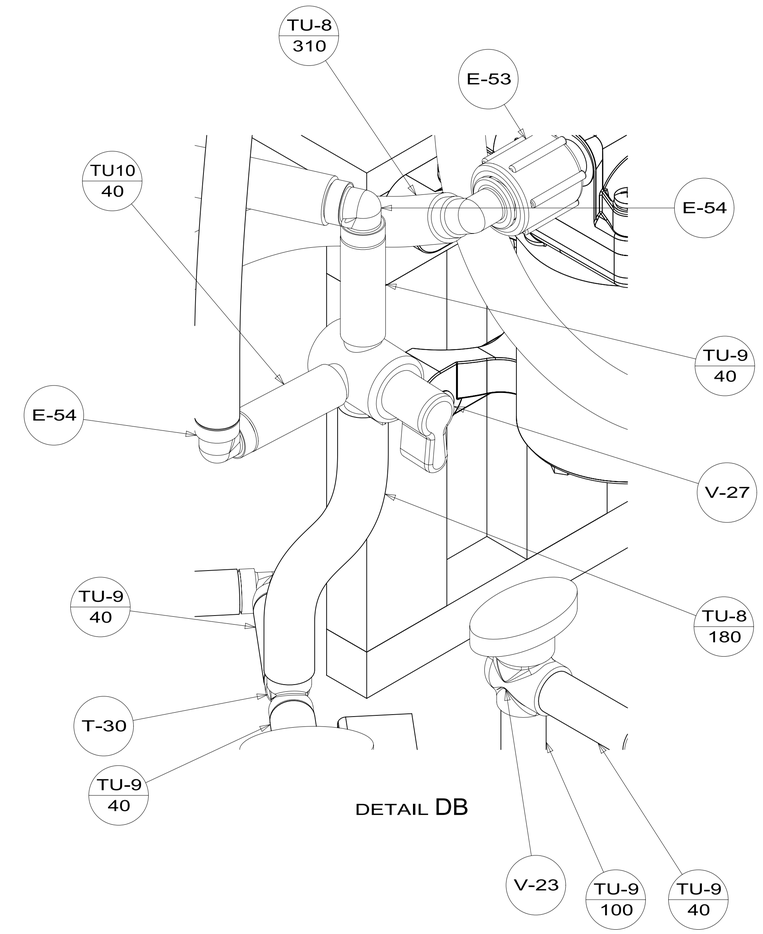

DETAIL DB

DESCRIPTION:		
WATER SYSTEM INSTL		
SHEET: 4 OF 5	ITEM/PART NO: 000188383 / 33542901000	REV

24-Jul-2019

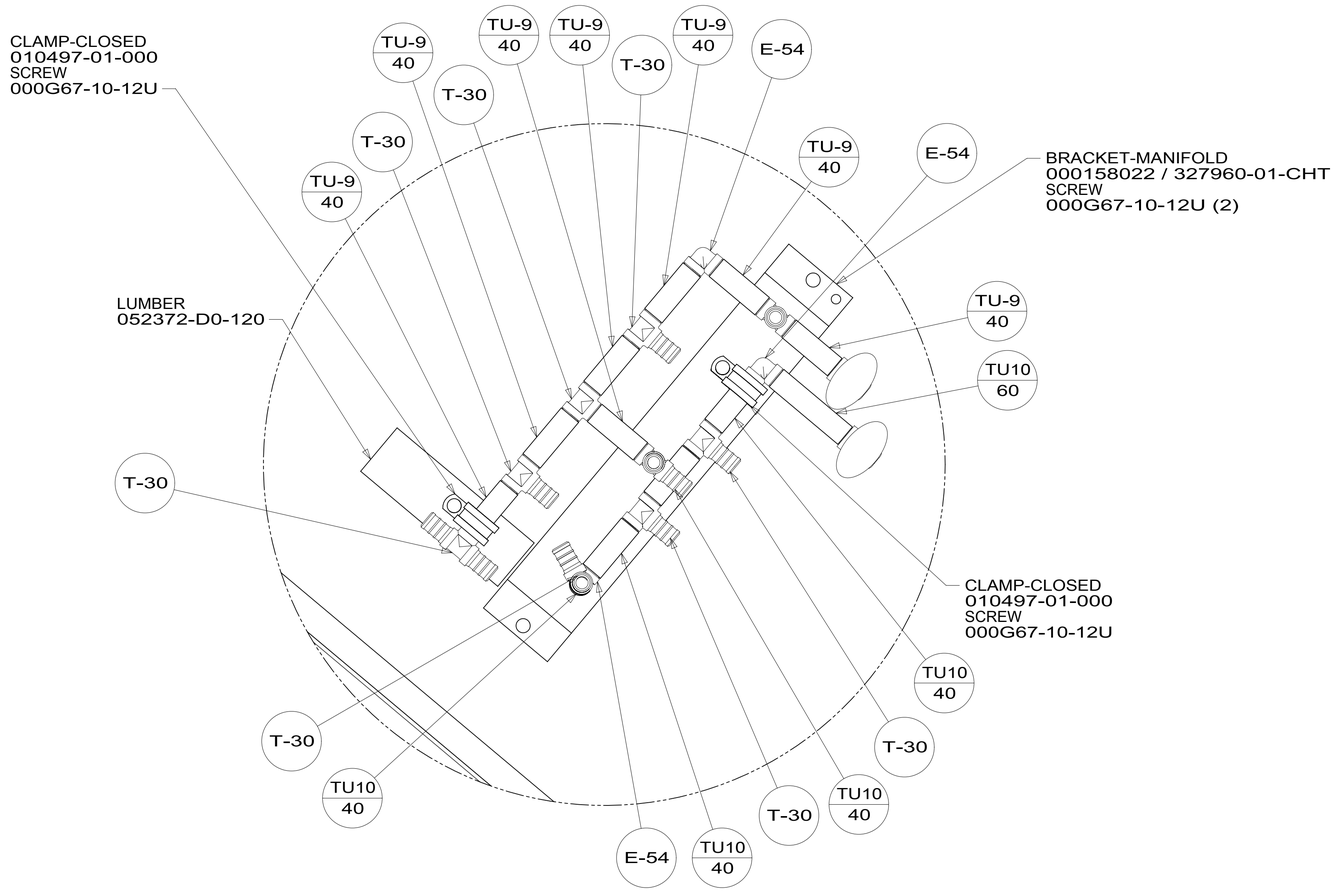

DETAIL EA

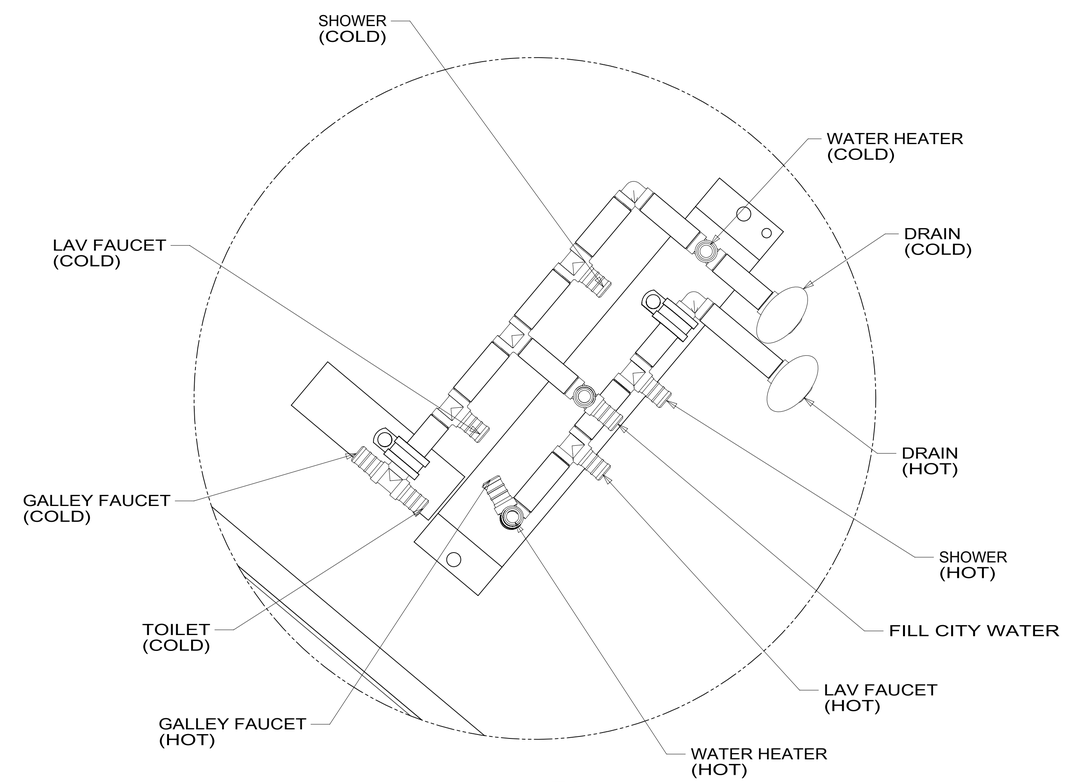

DETAIL EA

DESCRIPTION:		
WATER SYSTEM INSTL		
SHEET: 5 OF 5	ITEM/PART NO: 000188383 / 33542901000	REV

24-Jul-2019