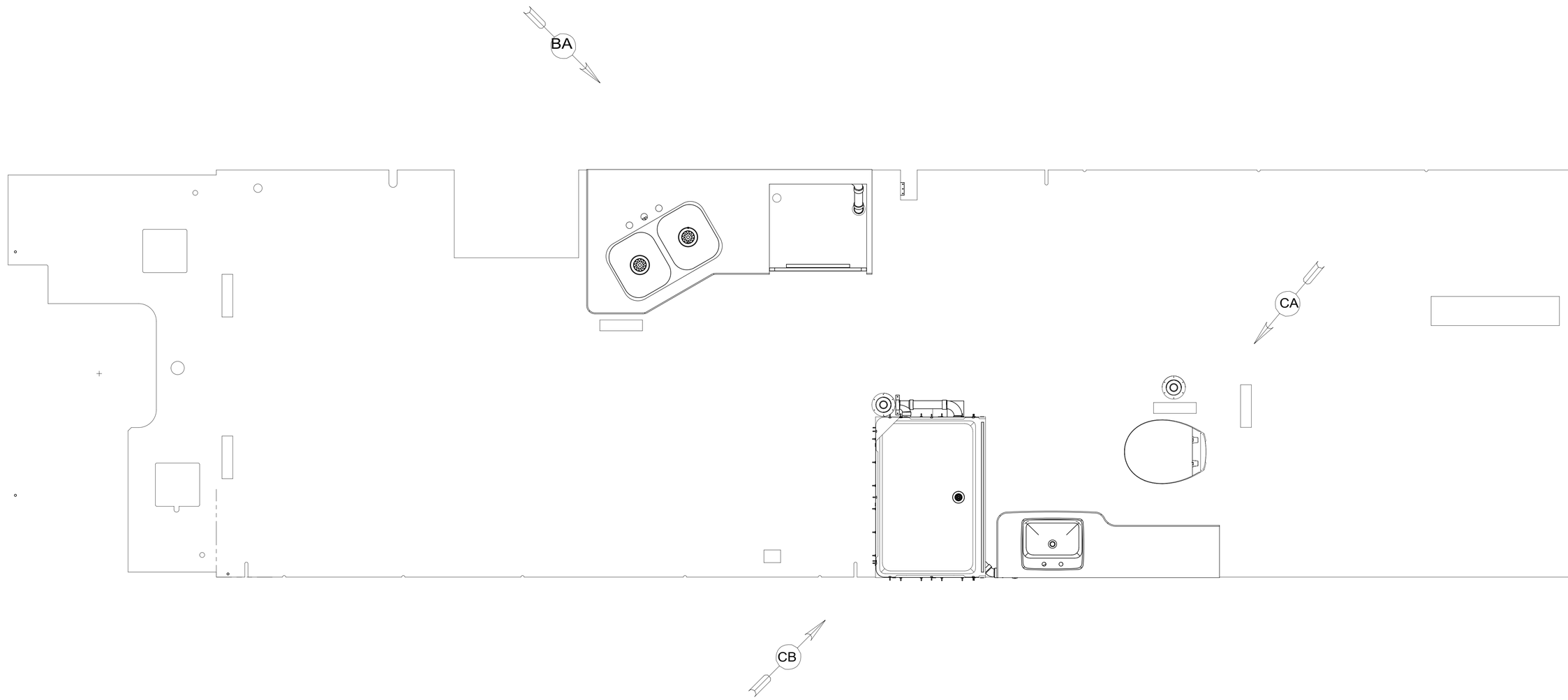

9. SEE DRAWING 061607 FOR INSTALLATION OF GROMMETS.

8. SECURE DRAINAGE PIPES TO CABINET USING WIRE TIE 108046-02-000, AND SCREW 000G67-10-12U AT INTERVALS OF NOT OF NOT MORE THAN 4 FEET APART.

7. SECURE VENT PIPE TO FLOOR WITH CLAMP 000156237 / 326663-02-000 (2),SCREW 000G67-10-12U (2), BRACKET 136878-01-CHT (2).

6. VENT PIPE MUST PROJECT 51 MIN AND 64 MAX ABOVE ROOF FOR PROPER FIT AND FUNCTION. ADD S-1 (000156099 / 326607-01-CHT SEAL-VENT PIPE) AROUND PIPE ON ROOF BEFORE VENT CAP IS INSTALLED.

5. SEAL AROUND SHOWER WITH SILICONE.

4. USE SMOOTH PLUMBERS PUTTY 167459-01-000 TO SEAL STRAINER (0.2 PER STRAINER).

3. ALL PIPE AND FITTINGS TO BE ASSEMBLED WITH SOLVENT 004020-01-000 (USA), 004020-02-000 (CAN)

2. SLOPE OF TRAP ARM MUST BE 6 PER 305 mm.

1. SLOPE OF HORIZONTAL PIPING TO BE MINIMUM OF 3 PER 305 mm.

NOTES:

X-X

FOR DRAINAGE CALLOUTS SEE DWG NO. 000211962 / 303370-01-000

WINNEBAGO IND

COPYRIGHT 2018 WINNEBAGO INDUSTRIES, INC.

DSNR:

DFTR:

ALL DIMENSIONS ARE IN MILLIMETERS

UNSPECIFIED TOLERANCES:		
WHOLE DIM (X)	±	3
ONE-PLACE (X.X)	±	1.5
TWO-PLACE (X.XX)	±	0.50
ANGLE	±	1°

MATERIAL:

REFER TO ES0018 FOR FASTENER TIGHTENING GUIDELINES

WEIGHT: (LBS)

FIRST USED: (REF) 20 E35U

DESCRIPTION: DRAINAGE SYSTEM INSTL

SHEET: 1 OF 4

ITEM/PART NO: 000174385 / 33227101000

REV

REF:

1 02-May-2019

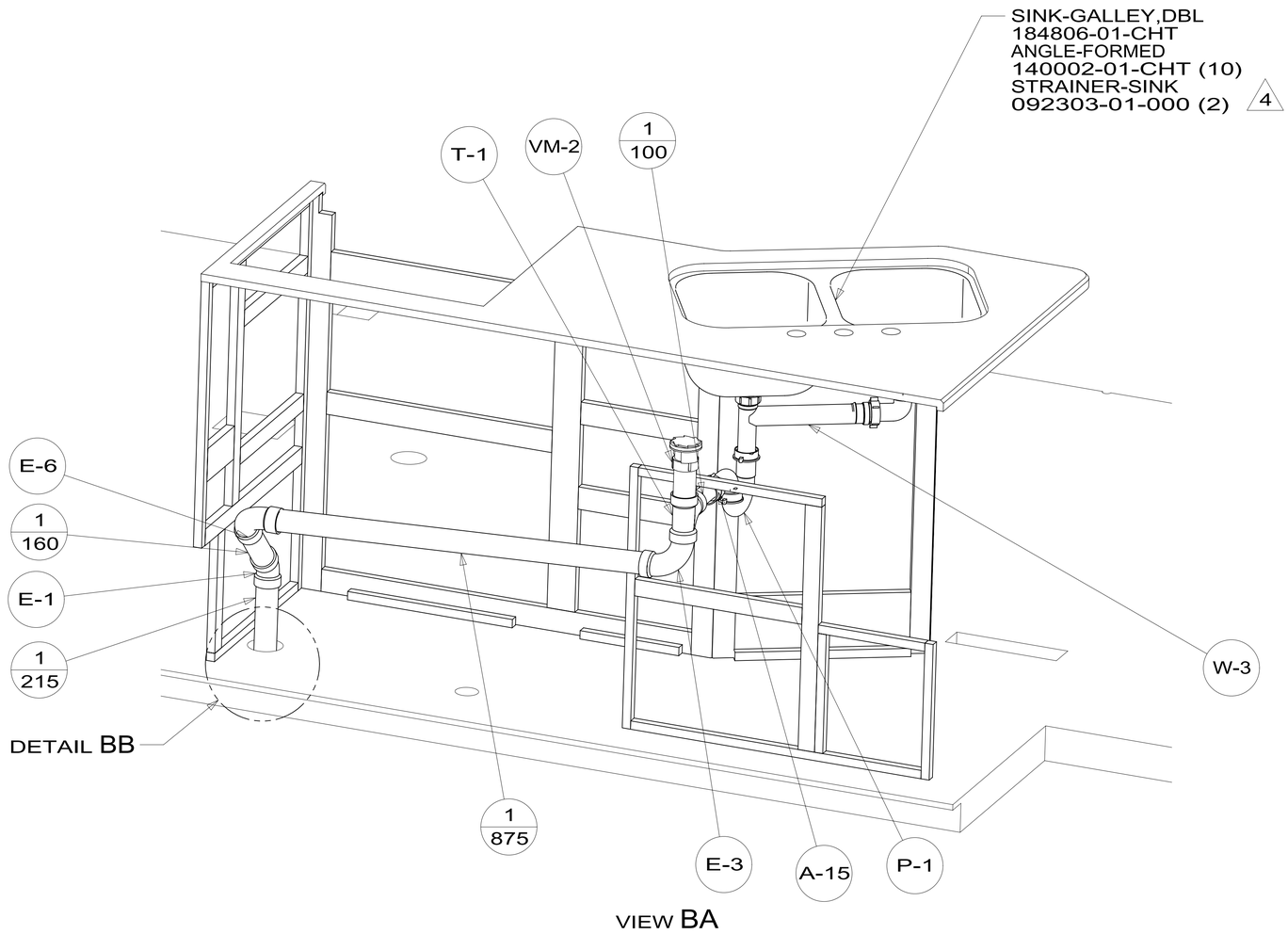

VIEW BA

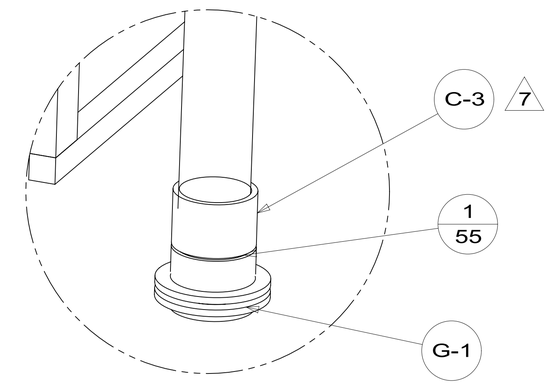

DETAIL BB
(SHOWN W/OUT FLOOR)

DESCRIPTION:		
DRAINAGE SYSTEM INSTL		
SHEET: 2 OF 4	ITEM/PART NO: 000174385 / 33227101000	REV

02-May-2019

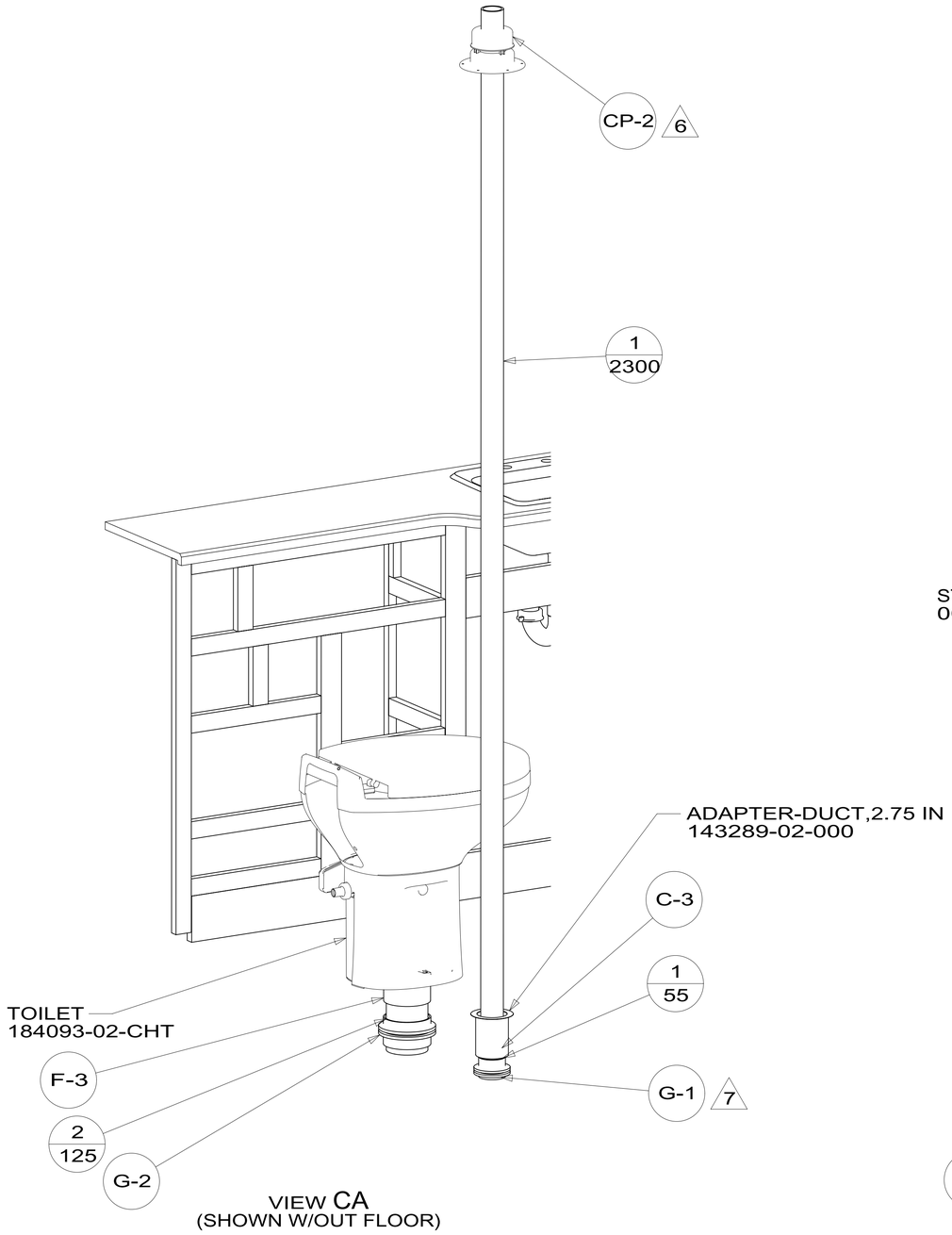

VIEW CA
(SHOWN W/OUT FLOOR)

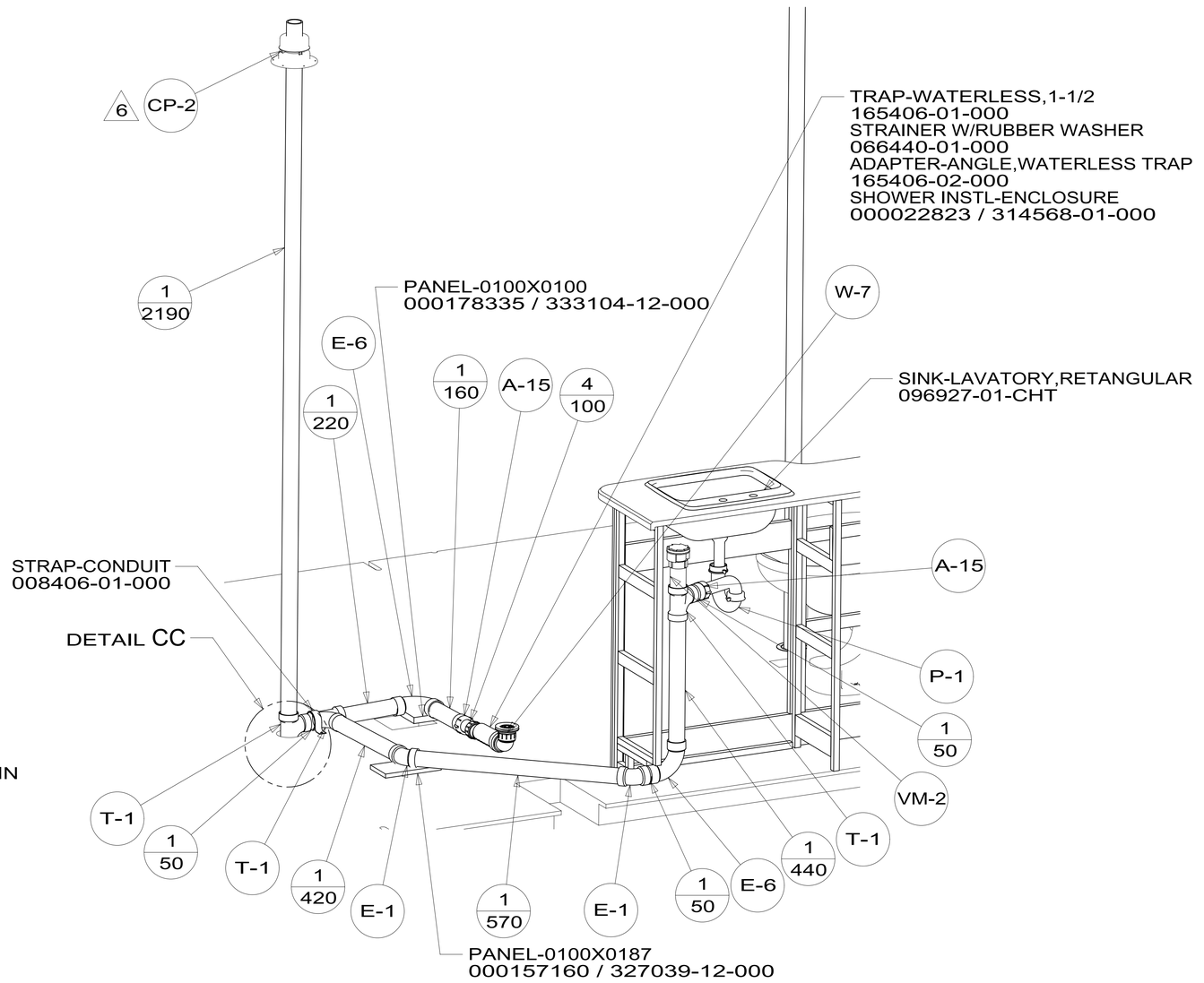

VIEW CB

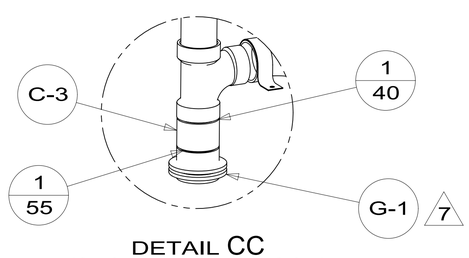

DETAIL CC
(SHOWN W/OUT FLOOR)

DESCRIPTION: DRAINAGE SYSTEM INSTL	
SHEET: 3 OF 4	ITEM/PART NO: 000174385 / 33227101000 REV

02-May-2019

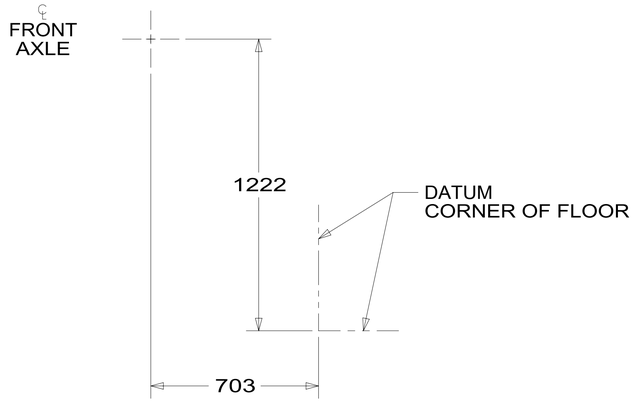

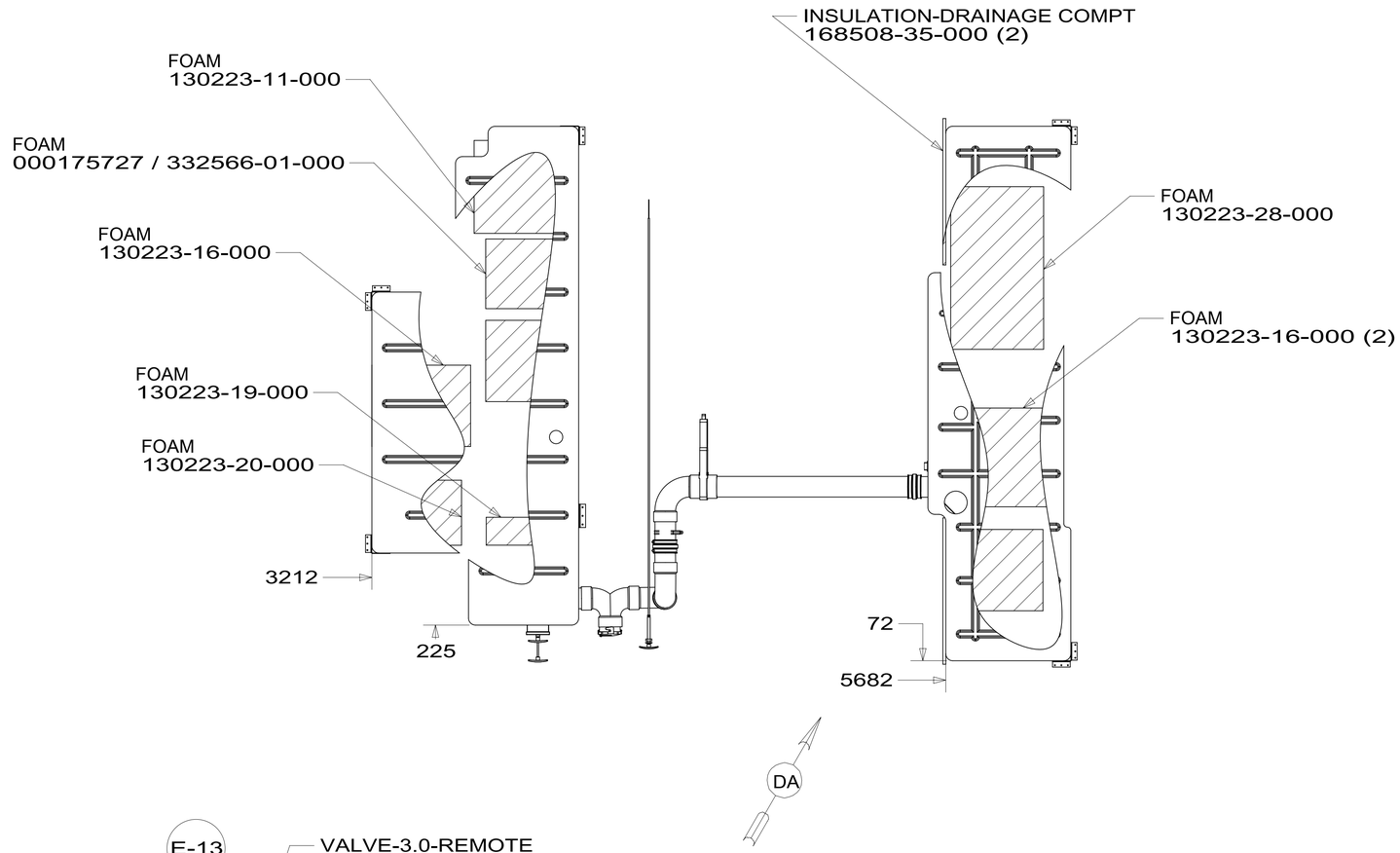

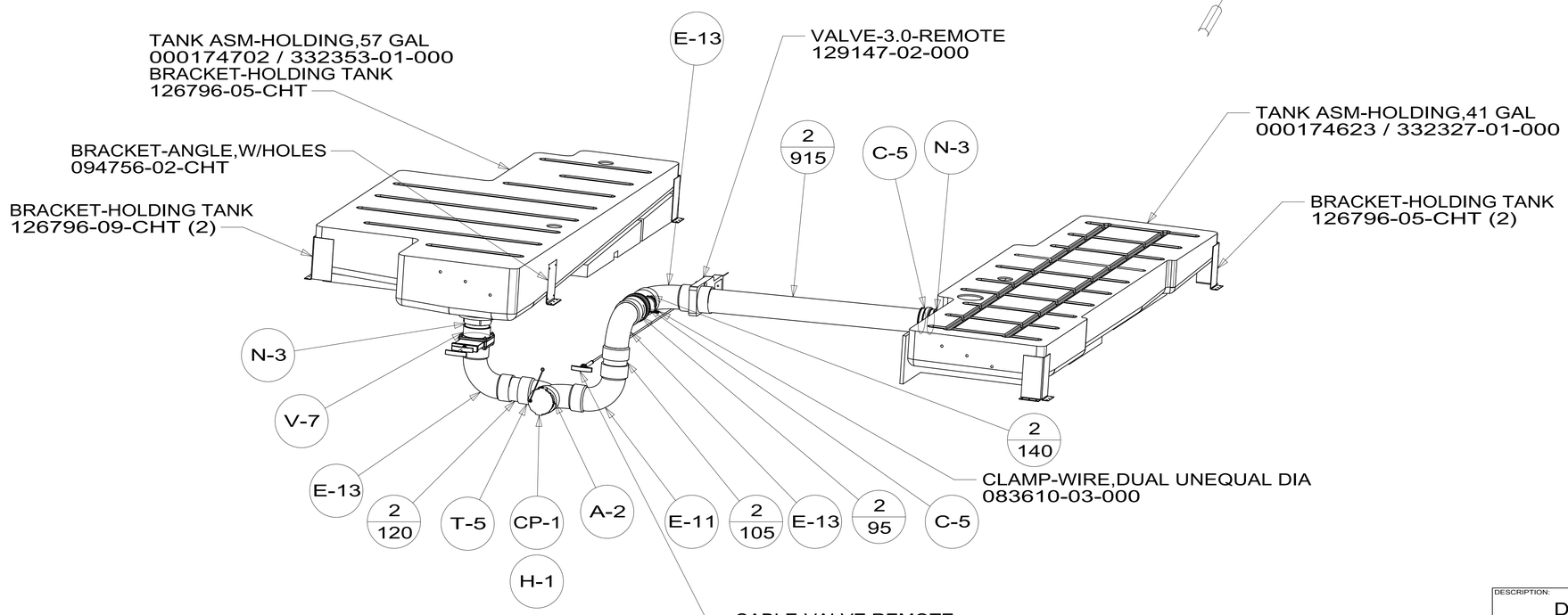

VIEW DA

DESCRIPTION:		
DRAINAGE SYSTEM INSTL		
SHEET: 4 OF 4	ITEM/PART NO: 000174385 / 33227101000	REV

02-May-2019