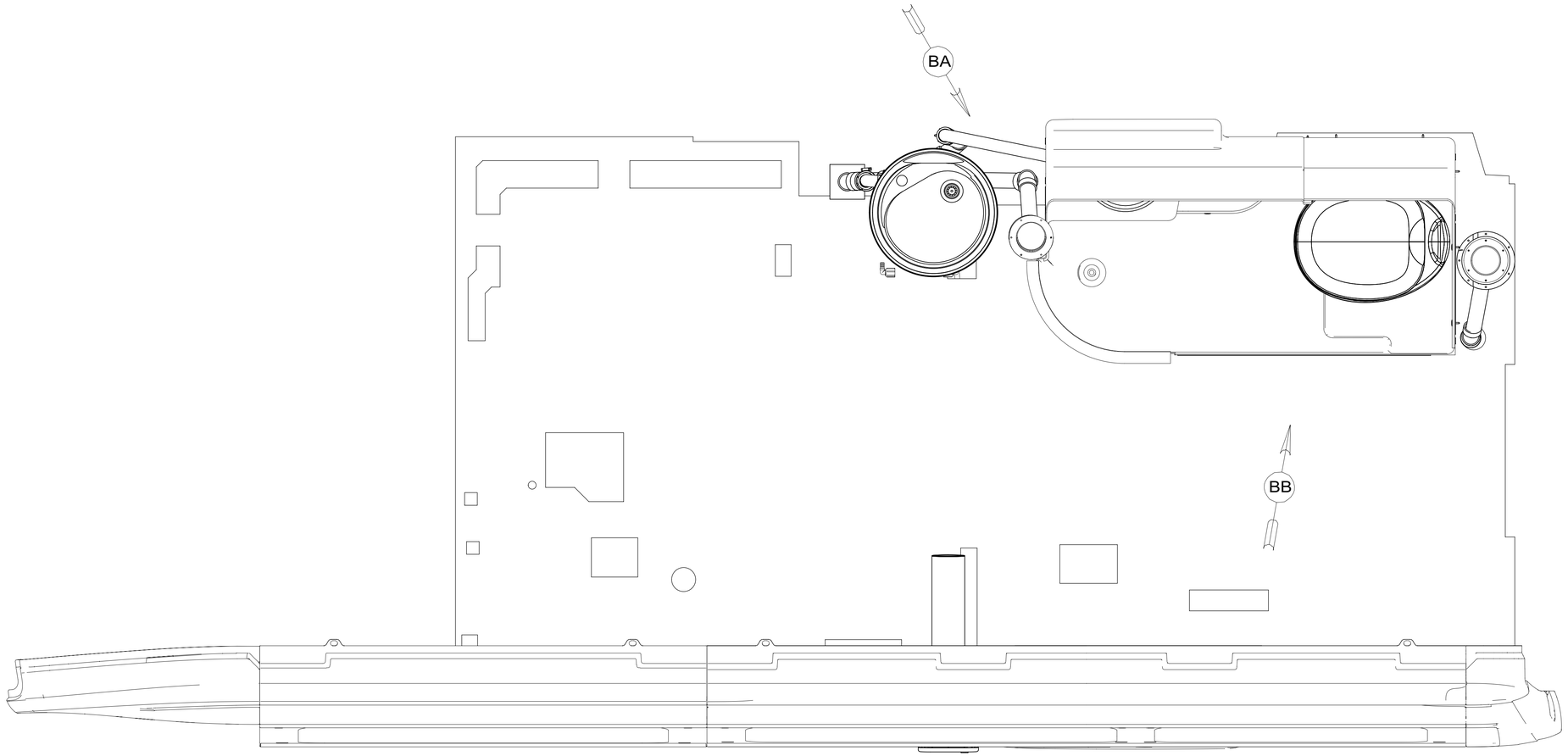

15. ATTACH SEAL TO BRACE WHERE IT CONTACTS HEATER PAD.
14. PREP THE SURFACE PER MANUFACTURERS INSTRUCTIONS BEFORE APPLYING THE HEATING PAD.
13. SEE WIRING INSTL-BODY FOR ELECTGRICAL CONNECTIONS.
12. REMOVE CAP FROM CONNECTOR 114974-01-000, INSTALL SCREEN 191399-01-000 OVER HOLE, RE-INSTALL CAP.
11. USE CLEAR SILICONE TO SEAL THE SINK TO THE SHOWER SURROUND.
10. TRIM TO FIT.
9. ALL CRIMP FITTINGS TO 1/2" PEX TUBING REQUIRE 1/2" CLAMP 000156249 / 326670-01-000.
8. NIPPLE TO BE TRIMMED TO LENGTH ON INSTALL.
7. SECURE VENT PIPE WITH CLAMP 000156237 / 326663-02-000.
6. VENT PIPE MUST PROJECT 51 MIN AND 64 MAX ABOVE ROOF FOR PROPER FIT AND FUNCTION.
5. SEAL AROUND SHOWER WITH SILICONE.
4. SECURE DRAINAGE PIPES TO CABINET USING WIRE TIE 108046-02-000, AND SCREW 000G67-10-12U AT INTERVALS OF NOT MORE THAN 4 FEET APART.
3. ALL PIPE AND FITTINGS TO BE ASSEMBLED WITH SOLVENT 004020-01-000 (USA), 004020-02-000 (CAN)
2. SLOPE OF TRAP ARM MUST BE 6 PER 305 mm.
1. SLOPE OF HORIZONTAL PIPING TO BE MINIMUM OF 3 PER 305 mm.

NOTES:

AA

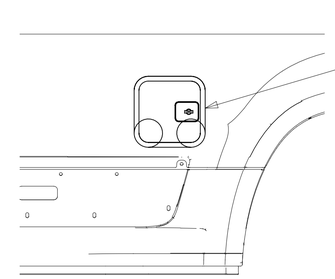

VIEW AA

X-X

FOR DRAINAGE CALLOUTS SEE DWG NO. 000211962 / 303370-01-000

23T DRAINAGE SYSTEM-HEATED

WINNEBAGO IND

COPYRIGHT 2018 WINNEBAGO INDUSTRIES, INC.

DSNR:
DFTR:
ALL DIMENSIONS ARE IN MILLIMETERS

UNSPECIFIED TOLERANCES:		
WHOLE DIM (X)	±	3
ONE-PLACE (X.X)	±	1.5
TWO-PLACE (X.XX)	±	0.50
ANGLE	±	1°

MATERIAL:

REFER TO ES0018 FOR FASTENER TIGHTENING GUIDELINES

WEIGHT: (LBS)

FIRST USED: (REF) 19 259GL

DESCRIPTION: DRAINAGE SYSTEM INSTL

SHEET: 1 OF 5

ITEM/PART NO: 000130945 / 32561101000

REV

REF:

1 19-Feb-2021

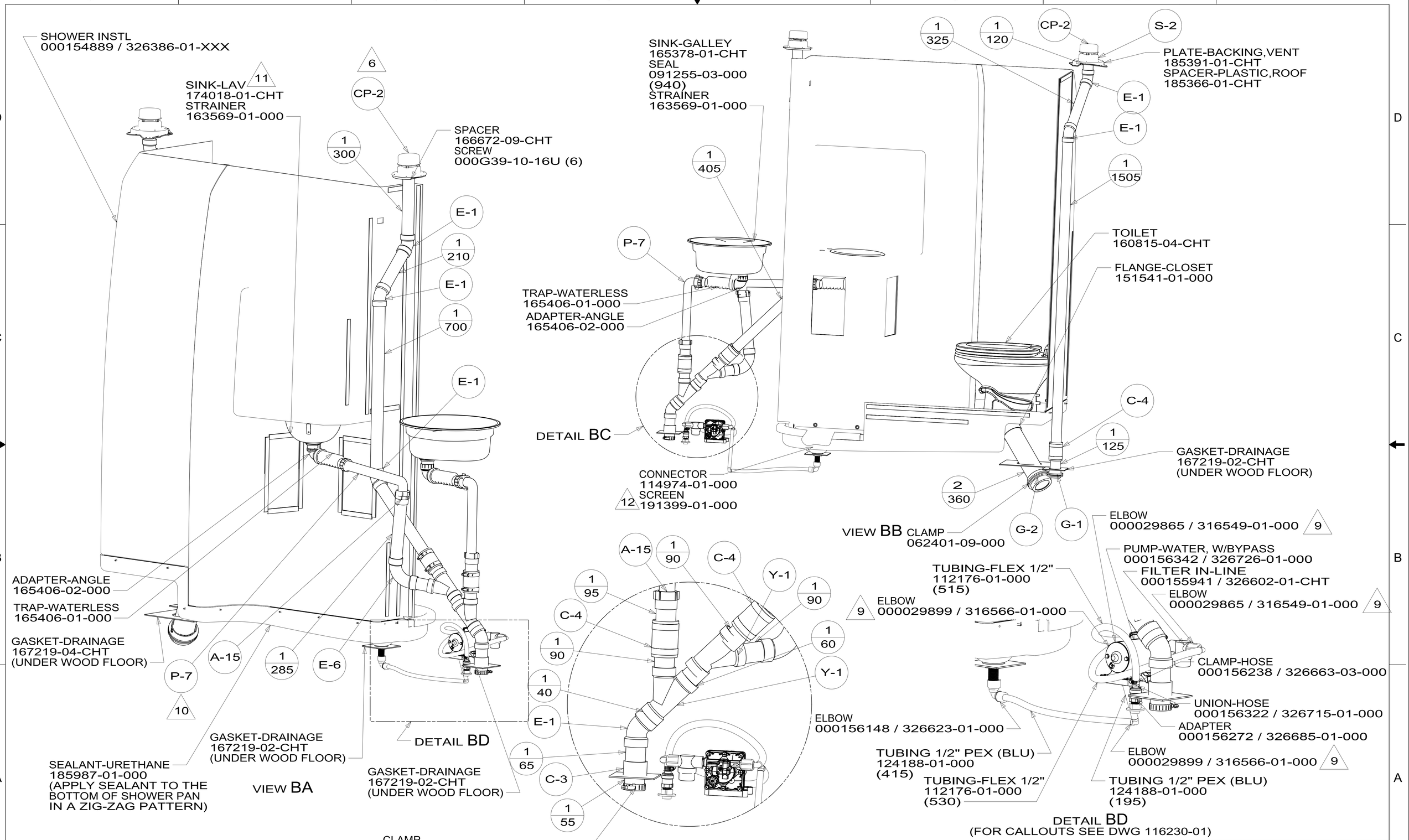

DESCRIPTION: DRAINAGE SYSTEM INSTL

SHEET: 2 OF 5 | ITEM/PART NO: 000130945 / 32561101000 | REV

19-Feb-2021

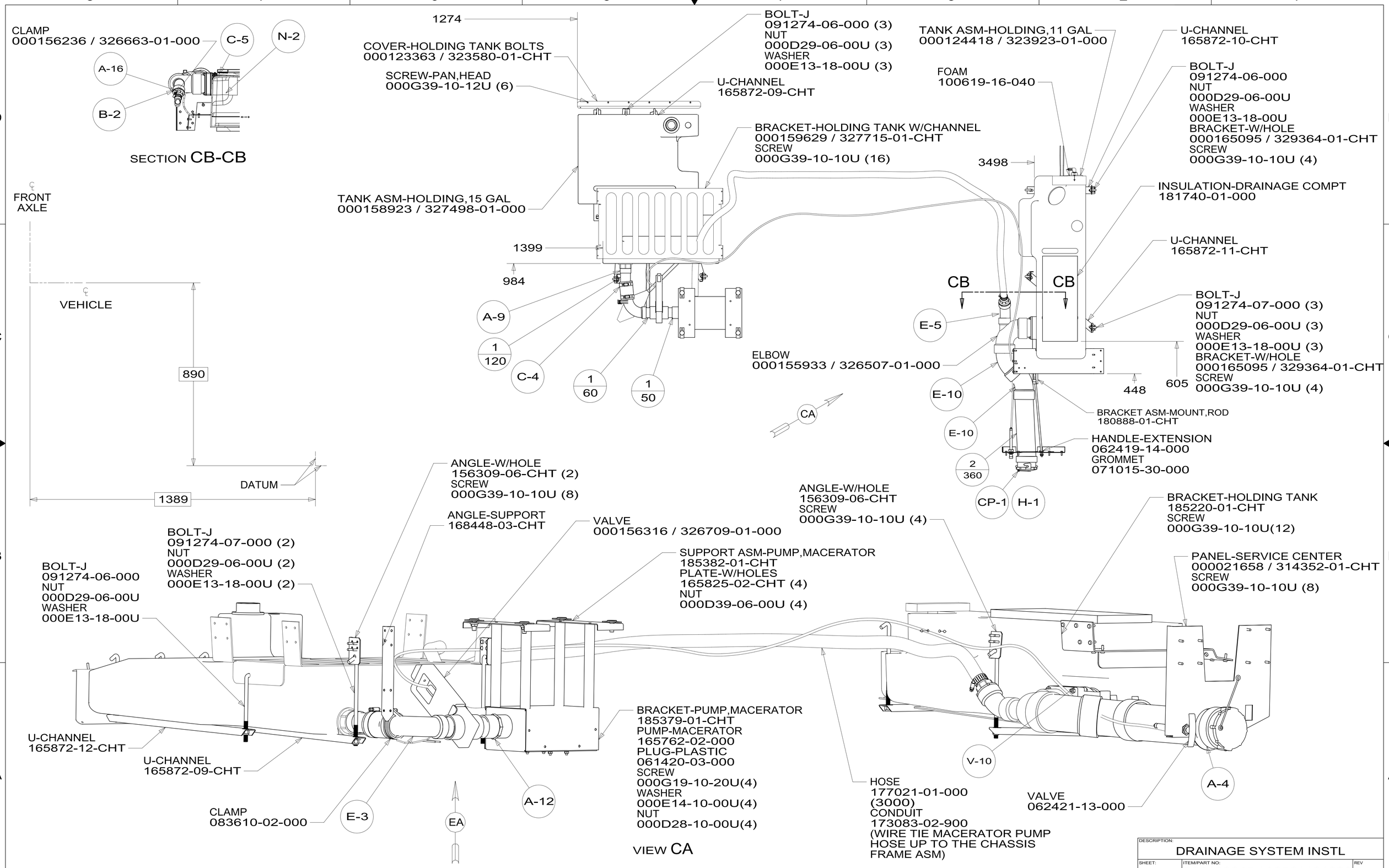

DESCRIPTION: DRAINAGE SYSTEM INSTL

SHEET: 3 OF 5 | ITEM/PART NO: 000130945 / 32561101000 | REV

19-Feb-2021

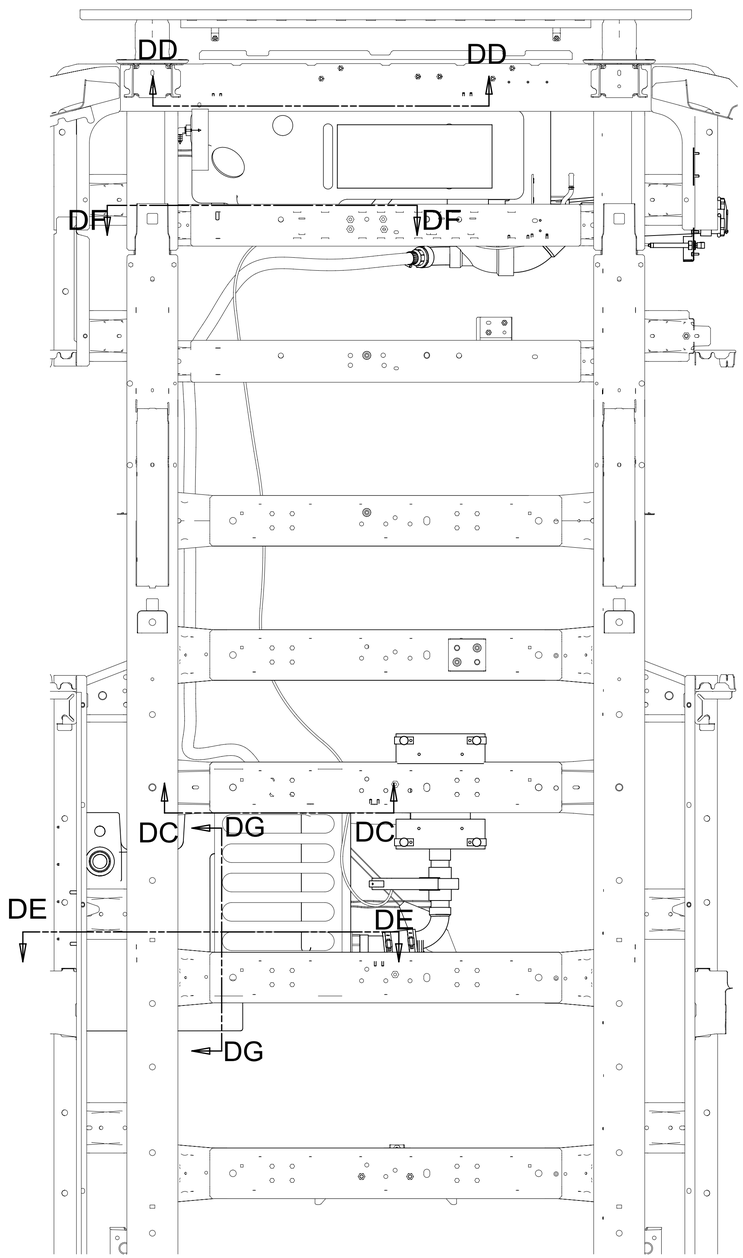

VIEW DA

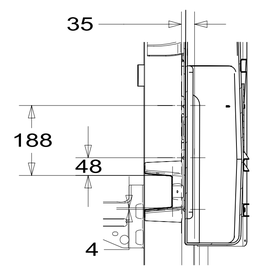

SECTION DG-DG

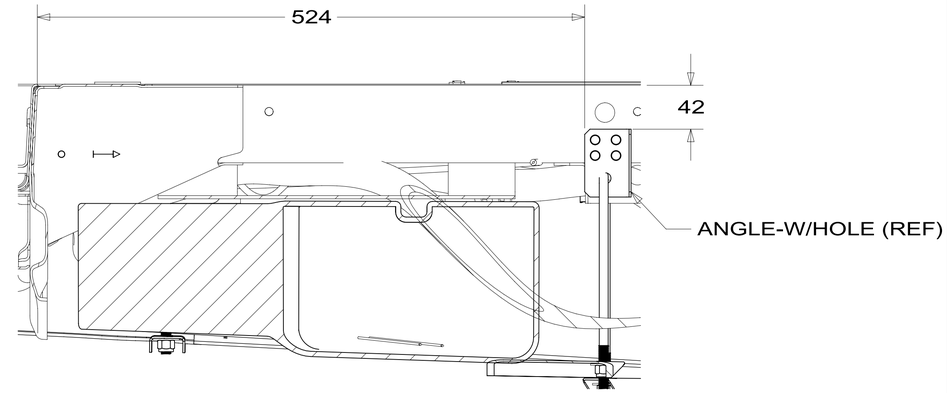

SECTION DC-DC

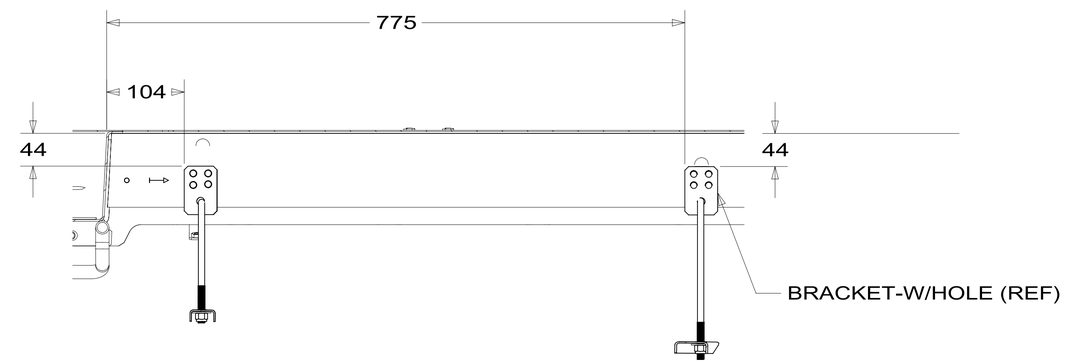

SECTION DD-DD

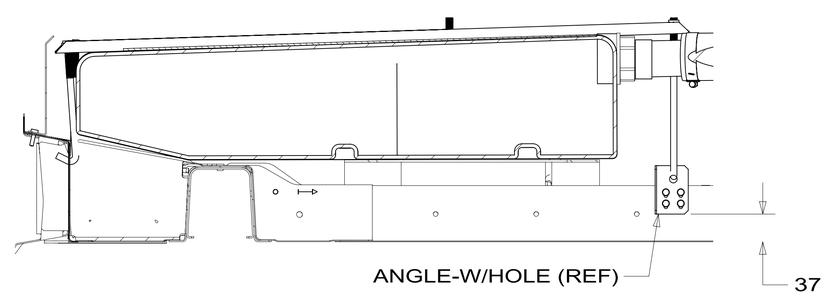

SECTION DE-DE

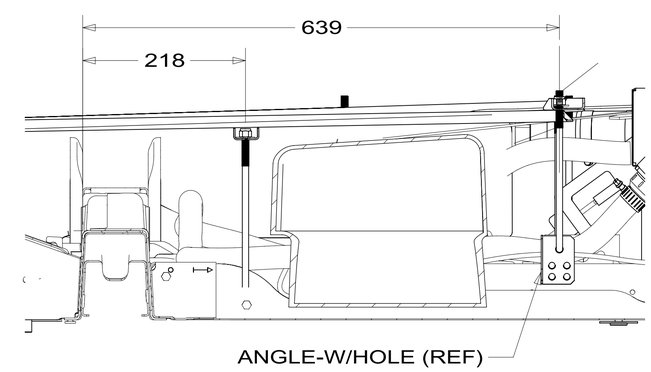

SECTION DF-DF

DESCRIPTION:		
DRAINAGE SYSTEM INSTL		
SHEET: 4 OF 5	ITEM/PART NO: 000130945 / 32561101000	REV

19-Feb-2021

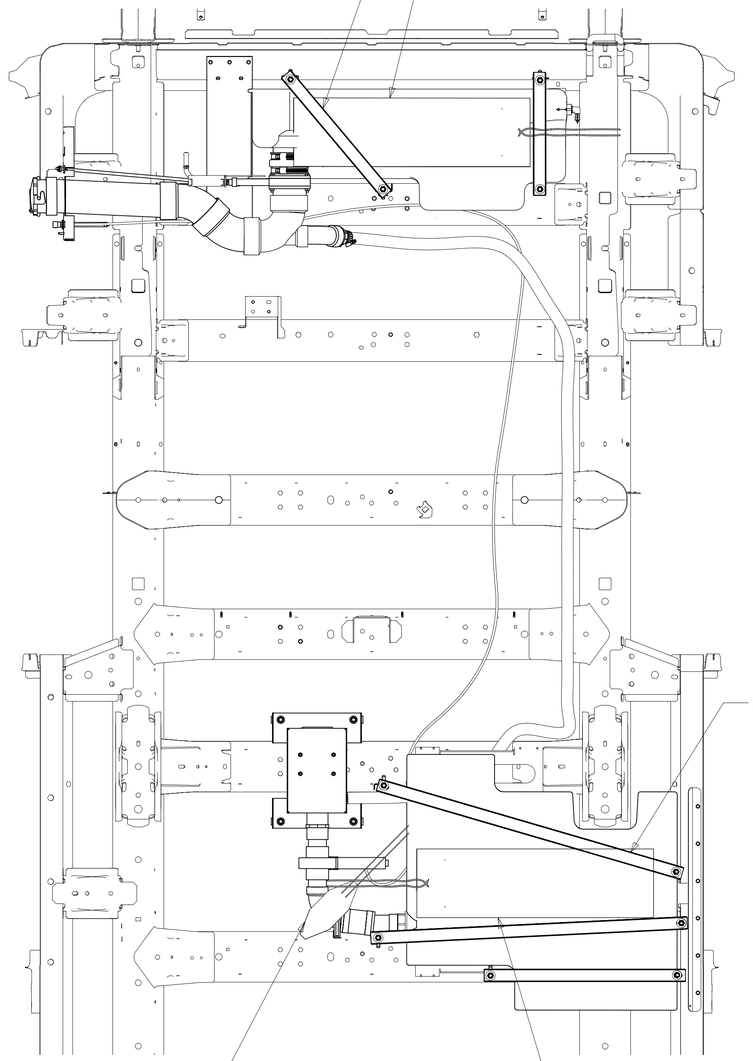

VIEW EA

DESCRIPTION:		
DRAINAGE SYSTEM INSTL		
SHEET: 5 OF 5	ITEM/PART NO: 000130945 / 32561101000	REV

19-Feb-2021