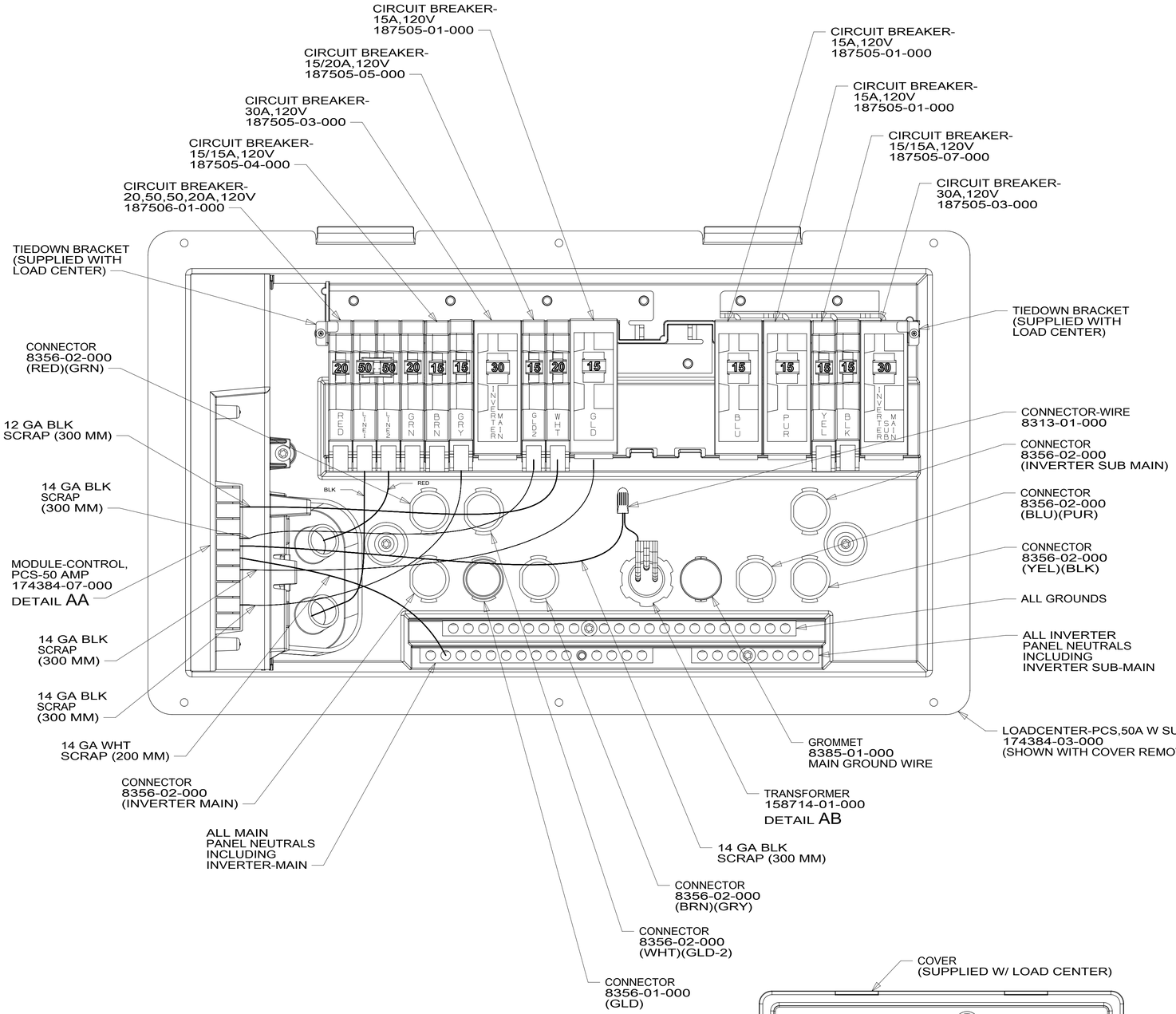

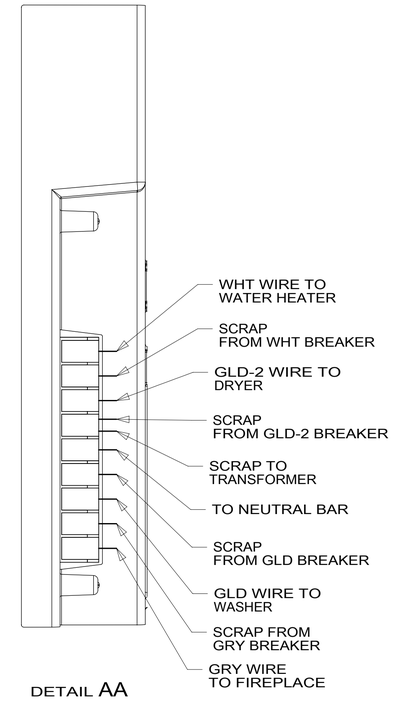

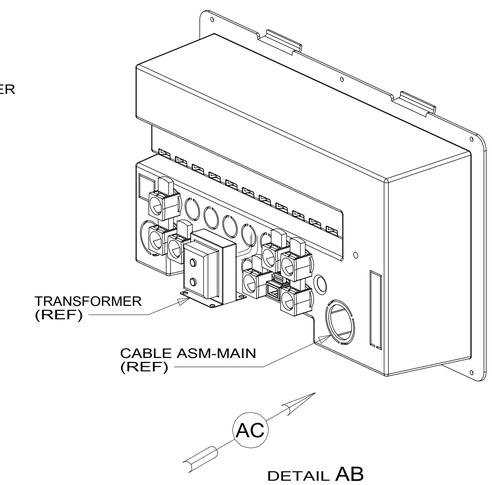

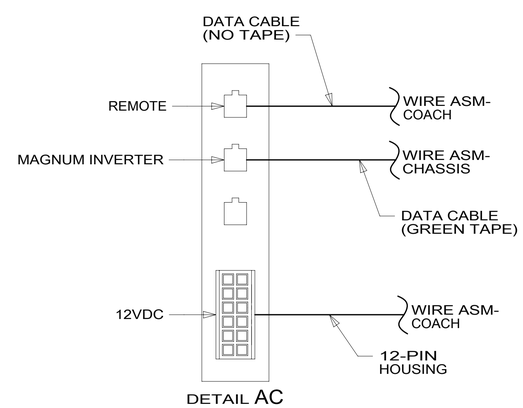

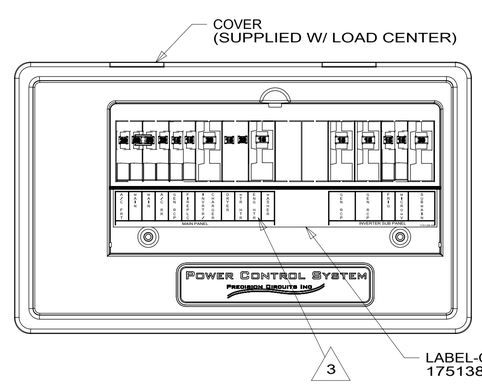

3 BLACKEN OUT ENG HTR.

2. REMOVE 400MM FROM OUTER JACKET ON ALL WIRES ENTERING LOAD CENTER AND TRIM INDIVIDUAL CONDUCTORS AS REQUIRED TO MAKE INTERNAL CONNECTIONS

1. ALL GROUND WIRES TO BE COVERED WITH TUBING 8041-02-000.

NOTES:

265 CODES/STANDARDS-CSA/CMVSS

1B1 CODES/STANDARDS USA

1B1 265

FOR ELECTRICAL TORQUE SPECIFICATIONS SEE DWG NO. 128783-01-000

X-X FOR ELECTRICAL CALLOUTS SEE DWG NO. 121339-01-000

WINNEBAGO IND

COPYRIGHT 2016 WINNEBAGO INDUSTRIES, INC.

DSNR:

DFTR:

ALL DIMENSIONS ARE IN MILLIMETERS

UNSPECIFIED TOLERANCES:		
WHOLE DIM (X)	±	3
ONE-PLACE (X.X)	±	1.5
TWO-PLACE (X.XX)	±	0.50
ANGLE	±	1°

MATERIAL:

REFER TO ES0018 FOR FASTENER TIGHTENING GUIDELINES

WEIGHT: (LBS)

FIRST USED: 19 F36Z

DESCRIPTION: LOAD CENTER ASM

SHEET: 1 OF 1

ITEM/PART NO: 000161230 / 32828001000

REV

REF:

1 24-Jan-2019