DANGER

Danger of electrical shock, burns or death. Always remove all power sources before attempting any repair, service or diagnostic work. Power can be present from shore power, generator, inverter or battery. All power sources must be disabled and secured before performing any service.

CAUTION

If you lack the skills, tools or equipment to perform diagnostic or repair work leave such work to an authorized Winnebago Industries dealer or other qualified shop.

Copyright © 2005 Winnebago Industries, Inc.

DRAWING NO.	SHEETS
176146-01	1,2,3
176146-02	1,4,5
176146-03	1,6
176146-04	1,7

RELEASE	REV A	DATE	DWG NO 176146

REV	ZONE	REVISION RECORD	DATE	DFTR-ORIG

	P34Y	P39N
CABLE ASM-COACH BATTERY (YEL)	175207-52-008	175207-52-008
CABLE ASM-COACH BATTERY GND (BLK)	175211-02-009	175211-02-009
CABLE ASM-CHASSIS BATTERY (PUR)	175207-15-007	175207-15-007
CABLE ASM-BATTERY MODE SOLENOID (RED)	175207-35-007	175207-35-007
CABLE ASM-GENERATOR (GRN)	141417-42-025	141417-42-025
CABLE ASM-GENERATOR (GND)	133568-12-013	133568-12-013
CABLE ASM-FRONT LEFT COMPT PASS THRU STUD (GRN)	141417-42-105	141417-42-120
CABLE ASM-INVERTER FUSE	141417-01-002	141417-01-002
CABLE ASM-INVERTER (ORG)	141415-62-012	141415-62-012
CABLE ASM-INVERTER GND (BLK)	133566-12-020	133566-12-020
LEVELING SYSTEM POWER CABLE (BLU)	141416-22-094	141416-22-120
CABLE AMS-JUMPER CHASSIS POS (RED)	175207-05-007	175207-05-007
CABLE ASM-RED JUMPER BETWEEN POSITIVE POSTS IN LEFT FRONT COMPT	141417-32-002	141417-32-002
CABLE ASM-JUMPER, NEG #1	133568-11-002	133568-11-002
CABLE ASM-JUMPER, POS #1	141417-51-002	141417-51-002
CABLE ASM-CONVERTER,POS	156203-03-008	156203-03-008
CABLE ASM-CONVERTER,NEG	156203-04-020	156203-04-020
CABLE ASM-FUSE,JUMPER	141415-01-002	141415-01-002

△2 SEE LEVELING SYSTEM INSTL FOR ADDITIONAL INFORMATION.

1. SEE WIRING INSTL-CHASSIS FOR ADDITIONAL INFORMATION.

NOTES:

FOR ELECTRICAL TORQUE SPECIFICATIONS SEE DWG NO. 128783-01-000

(X-X) FOR ELECTRICAL CALLOUTS SEE DWG NO. 121339-01-000

265 CODES/STANDARDS-CSA/CMVSS

1B1 CODES/STANDARDS USA

1B1 265

COPYRIGHT 2010 WINNEBAGO INDUSTRIES, INC.

DFTR	ORIG. DATE
CHKR	ALL DIMENSIONS ARE IN MILLIMETERS
P.E.	
M.E.	FIRST USED
DSNR	11 P-SERIES

UNSPECIFIED TOLERANCES ARE:

WHOLE DIM (X)	:	3
ONE-PLACE (X.X)	:	1.5
TWO-PLACE (X.XX)	:	0.50
ANGLE	:	1°

MATERIAL:

THIRD ANGLE PROJECTION

DO NOT SCALE DRAWING

TITLE: BATTERY INSTL

SHEET 1 OF 7 | PART NO 176146 | REV

REF: 1 10/22/2010 Page 02

DWG NO 176146

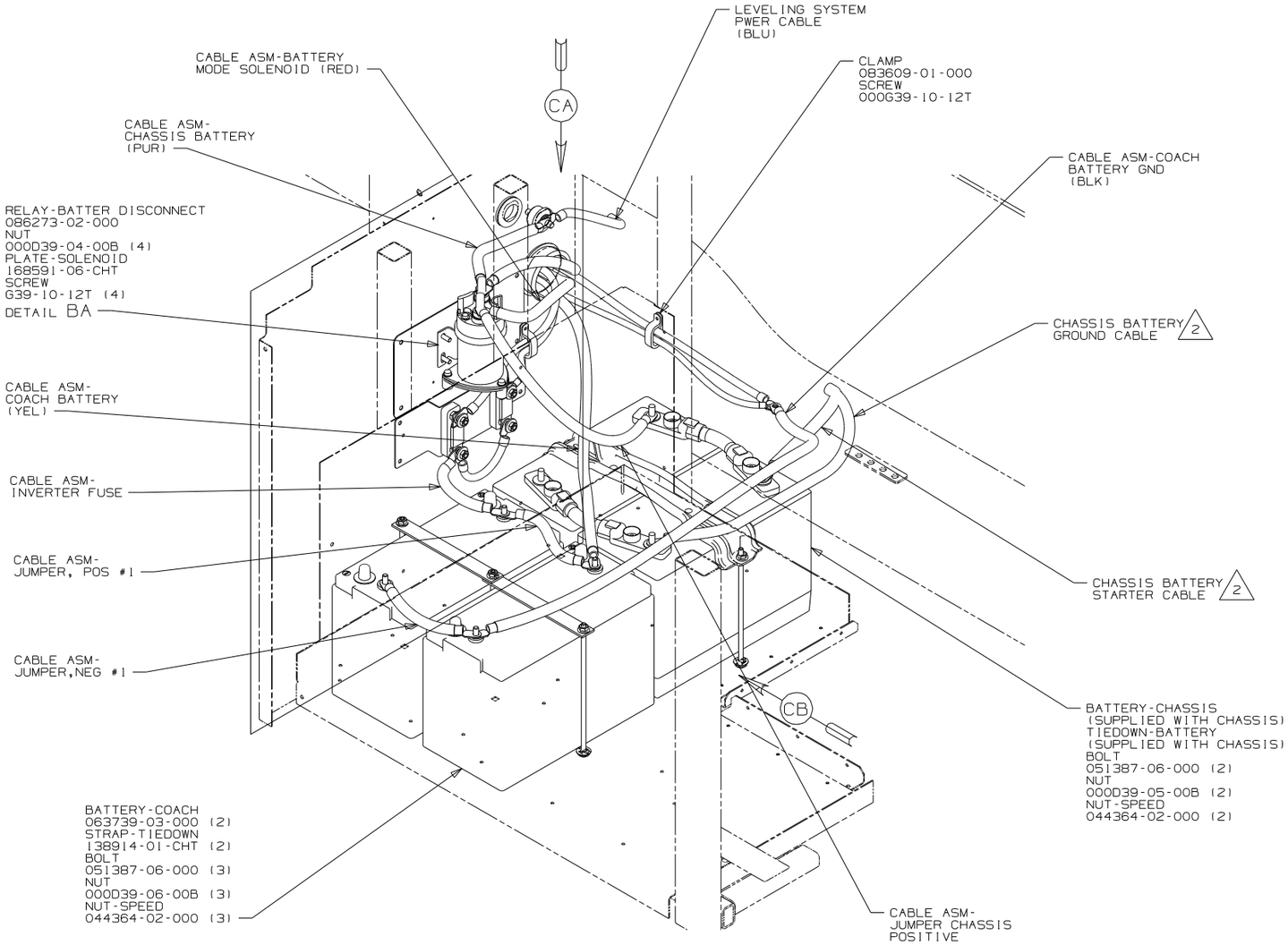

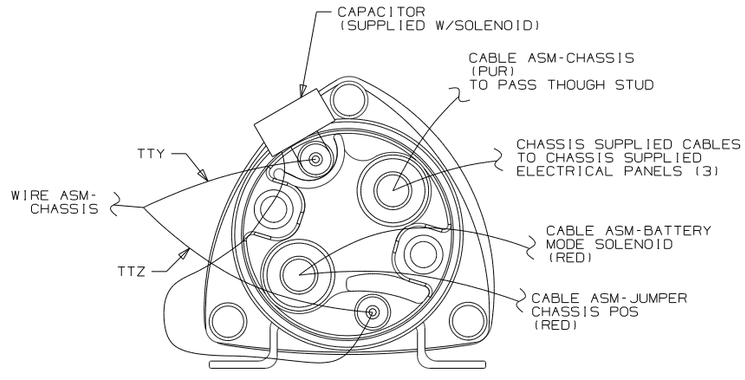

DETAIL BA

NOTES:

1. SEE WIRING INSTL-CHASSIS FOR ADDITIONAL INFORMATION.

2 SUPPLIED WITH CHASSIS.

3. DO NOT ROUTE BATTERY CABLES OVER BATTERY FILL CAPS.

265 CODES/STANDARDS-CSA/CMVSS

181 CODES/STANDARDS USA

181 265

FOR ELECTRICAL TORQUE SPECIFICATIONS SEE DWG NO. 128783-01-000

X-X FOR ELECTRICAL CALLOUTS SEE DWG NO. 121339-01-000

FIRST USED 11 P-SERIES

DO NOT SCALE DRAWING

TITLE: BATTERY INSTL

SHEET 2 PART NO 176146 REV

DWG NO 176146

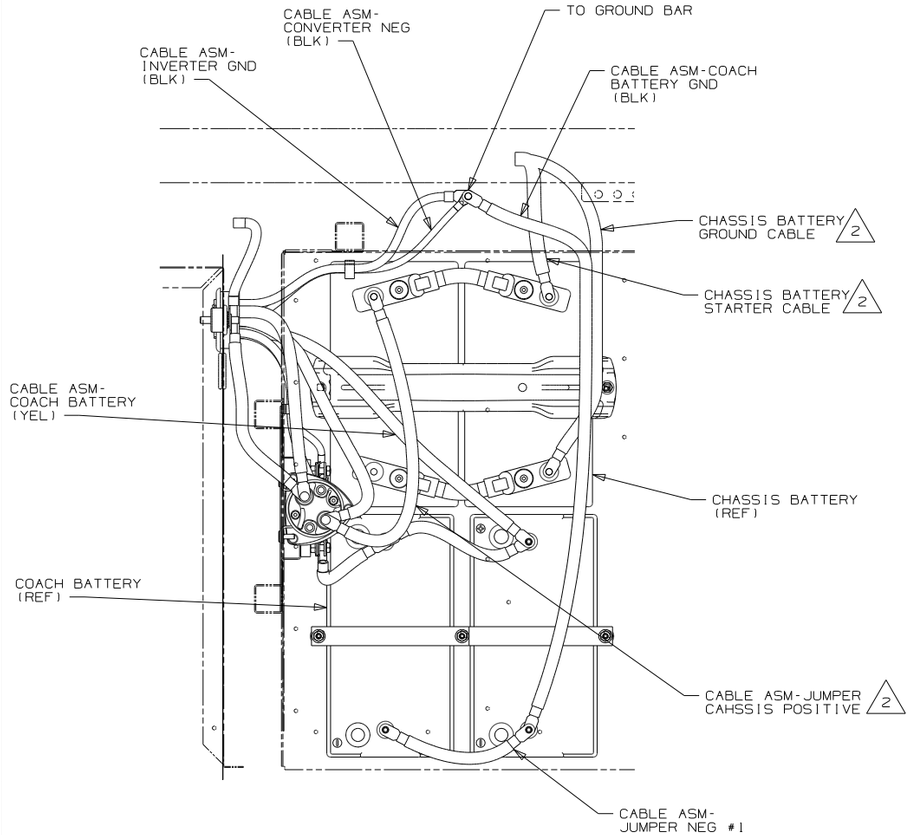

VIEW CA

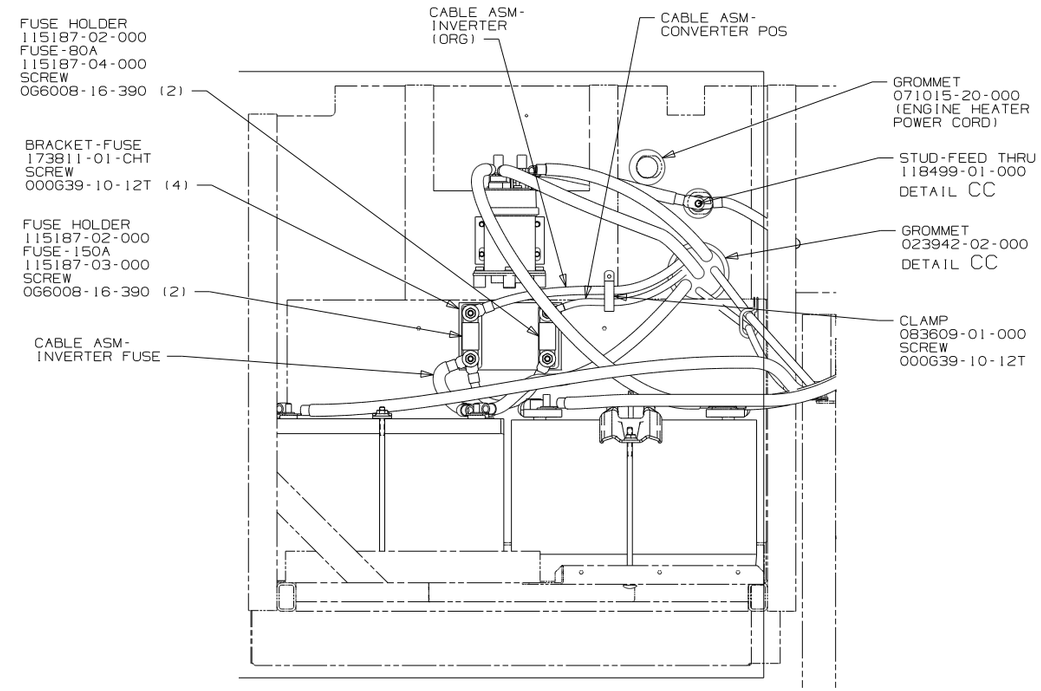

VIEW CB

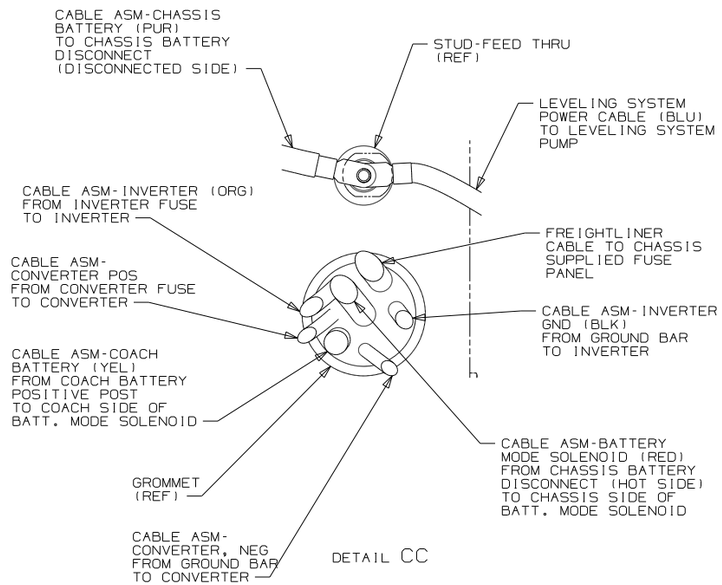

DETAIL CC

3. DO NOT ROUTE BATTERY CABLES OVER BATTERY FILL CAPS.

2 SUPPLIED WITH CHASSIS.

1. SEE WIRING INSTL-CHASSIS FOR ADDITIONAL INFORMATION.

NOTES:

FOR ELECTRICAL TORQUE SPECIFICATIONS SEE DWG NO. 128783-01-000	X-X FOR ELECTRICAL CALLOUTS SEE DWG NO. 121339-01-000

265 CODES/STANDARDS-CSA/CMVSS

181 CODES/STANDARDS USA

181 265

FIRST USED	11 P-SERIES
	DO NOT SCALE DRAWING
TITLE:	BATTERY INSTL
SHEET 3	PART NO 176146 REV