Table of Contents

2007 Journey/Meridian P39K Wiring Diagram Book

DANGER

Danger of electrical shock, burns or death. Always remove all power sources before attempting any repair, service or diagnostic work. Power can be present from shore power, generator, inverter or battery. All power sources must be disabled and secured before performing any service.

CAUTION

If you lack the skills, tools or equipment to perform diagnostic or repair work leave such work to an authorized Winnebago Industries dealer or other qualified shop.

		P34H	P36G	P39K	
RED	12-UL	136135-07-053	136135-07-053	136135-07-053	
	12-CA	136136-07-053	136136-07-053	136136-07-053	
MAIN	4-3 UL	136141-01-033	136141-01-030	136141-01-027	
	4-3 CA	136142-01-033	136142-01-030	136142-01-027	
GRN	12-UL	136135-08-053	136135-08-053	136135-08-053	
	12-CA	136136-08-053	136136-08-053	136136-08-053	
INVERTER CHARGER MAIN	10-UL	136137-01-035	136137-01-035	136137-01-035	13X
	10-CA	136138-01-035	136138-01-035	136138-01-035	13X
YEL	14-UL	136131-05-075	136131-05-072	136131-05-065	40D
	14-CA	136134-05-075	136134-05-072	136134-05-065	40D
YEL-2	14-UL	136131-05-075	136131-05-072	136131-05-070	144 15U 79W
	14-CA	136134-05-075	136134-05-072	136134-05-070	144 15U 79W
YEL-3	14-UL	136131-17-020	136131-17-020	136131-17-020	13X
	14-CA	136134-17-020	136134-17-020	136134-17-020	13X
GLD	12-UL	136135-10-096	136135-10-055	136135-10-130	21M 54E
	12-CA	136136-10-096	136136-10-055	136136-10-130	21M 54E
WHT	12 UL	136135-09-033	136135-09-033	136135-09-033	
	12 CA	136136-09-033	136136-09-033	136136-09-033	
INVERTER CHARGER SUB	10-UL	136137-01-035	136137-01-035	136137-01-035	13X
	10-CA	136138-01-035	136138-01-035	136138-01-035	13X
BLU	14-UL	136131-02-165	136131-02-165	136131-02-171 △1	
	14-CA	136134-02-165	136134-02-165	136134-02-171 △1	
BRN	14-UL	136131-03-050 △1	136131-03-105	136131-03-103 △1	
	14-CA	136134-03-050 △1	136134-03-105	136134-03-103 △1	
PUR	14-UL	136131-04-155	136131-04-194	136131-04-188	40D
	14-CA	136134-04-155	136134-04-194	136134-04-188	40D
PUR	14-UL	136131-04-075	136131-04-035	136131-04-020	13X
	14-CA	136134-04-075	136134-04-035	136134-04-020	13X
BLK	14-UL	136131-06-050 △1	136131-06-075	136131-06-065 △1	
	14-CA	136134-06-050 △1	136134-06-075	136134-06-065 △1	
ORG	14-UL	136131-16-145	136131-16-140	136131-16-188	13X
	14-CA	136134-16-145	136134-16-140	136134-16-188	13X

RELEASE	REV A	DATE	DWG NO 157575
REV	ZONE	REVISION RECORD	DATE / DFTR-ORIG

79W REFRIGERATOR-4 DOOR
40D INVERTER-DC/AC,600 WATT
54E WASHER/DRYER
21M WASHER/DRYER PREP
15U REFRIGERATOR/FRZR W/ICEMAKER
13X INVERTER/CHARGER 2.0 KW
144 REFRIGERATOR-DOUBLE DOOR
265 CODES/STANDARDS-CSA/CMVSS
1B1 CODES/STANDARDS USA

1B1 265

△1 SEE DETAIL BA FOR CONNECTOR INSTALLATION.

NOTES:

WINNEBAGO

DFTR | ORIG. DATE
CHKR | ALL DIMENSIONS ARE IN MILLIMETERS
P.E.
M.E. | FIRST USED 07 P-SERIES
DSNR

UNSPECIFIED TOLERANCES ARE:
WHOLE DIM (X) : 3
ONE-PLACE (X.X) : 1.5
TWO-PLACE (X.XX) : 0.50
ANGLE : 1°

MATERIAL:

THIRD ANGLE PROJECTION

DO NOT SCALE DRAWING

TITLE: LOAD CENTER/ATS ASM

SHEET 1 OF 5 | PART NO 157575 | REV

DWG NO 157575

		P34H	P36G	P39K
GROUND MAIN		136145-01-023	136145-01-023	136145-01-023
GROUND SUB		136145-01-023	136145-01-023	136145-01-023
ATS GROUND		136145-01-008	136145-01-008	136145-01-011
INVERTER CASE GROUND		136145-01-010	136145-01-010	136145-01-020
GENERATOR CABLE ASM		136148-02-105	136148-02-108	136148-02-115
CONDUIT ASM-CENTRAL A/C		151704-01-029	151704-01-029	151704-01-029
THROW IN WIRE #1	14-UL	136131-04-140	136131-03-080 △1	136131-04-050 △1
	14-CA	136134-04-140	136134-03-080 △1	136134-04-050 △1
THROW IN WIRE #2	14-UL	136131-03-040 △1	136131-04-150	136131-04-006 △1
	14-CA	136134-03-040 △1	136134-04-150	136134-04-006 △1
THROW IN WIRE #3	14-UL	136131-06-020 △1	136131-12-062 (40D)	136131-02-085 △1
	14-CA	136134-06-020 △1	136134-12-062 (40D)	136134-02-085 △1
THROW IN WIRE #4	14-UL	136131-12-105	----------	136131-04-145
	14-CA	136134-12-105	----------	136134-04-145
THROW IN WIRE #5	14-UL	---------	----------	136131-02-017 △1
	14-CA	----------	----------	136134-02-017 △1
THROW IN WIRE #6	14-UL	---------	----------	136131-02-003 △1
	14-CA	----------	----------	136134-02-003 △1
THROW IN WIRE #7	14-UL	---------	----------	X
	14-CA	----------	----------	X
THROW IN WIRE #8	14-UL	---------	----------	X
	14-CA	----------	----------	X
THROW IN WIRE #9	14-UL	---------	----------	X
	14-CA	----------	----------	X
THROW IN WIRE #10	14-UL	---------	----------	X
	14-CA	----------	----------	X

		P34H	P36G	P39K
SLIDEOUT #1 WIRE #1		136151-03-017 △2	136151-03-030 △2	136151-03-060 △2
SLIDEOUT #1 WIRE #2		136151-06-017 △2	----	----
SLIDEOUT #2 WIRE #1		----	----	136151-04-020 △2
SLIDEOUT #3 WIRE #1		----	----	136151-02-017 △2
SLIDEOUT #3 WIRE #2		----	----	136151-06-017 △2
SLIDEOUT #3 WIRE #3		----	----	136151-02-025 △2

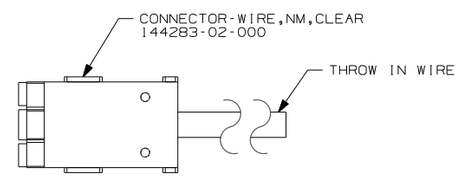

DETAIL BA

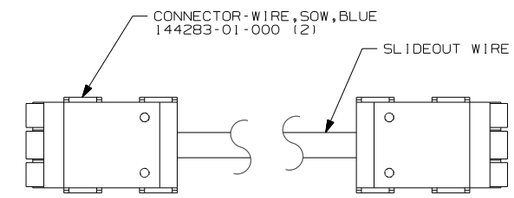

DETAIL BB

(40D) INVERTER-DC/AC,600 WATT
(265) CODES/STANDARDS-CSA/CMVSS
(181) CODES/STANDARDS USA

△3 SEE WIRING INSTL-BODY,110V FOR ADDITIONAL INFORMATION.
△2 SEE DETAIL BB FOR CONNECTOR INSTALLATION.
△1 SEE DETAIL BA FOR CONNECTOR INSTALLATION.
NOTES:

(181) (265)

FIRST USED 07 P-SERIES

DO NOT SCALE DRAWING

TITLE: LOAD CENTER/ATS ASM

SHEET 2 | PART NO 157575 | REV

DWG NO 157575

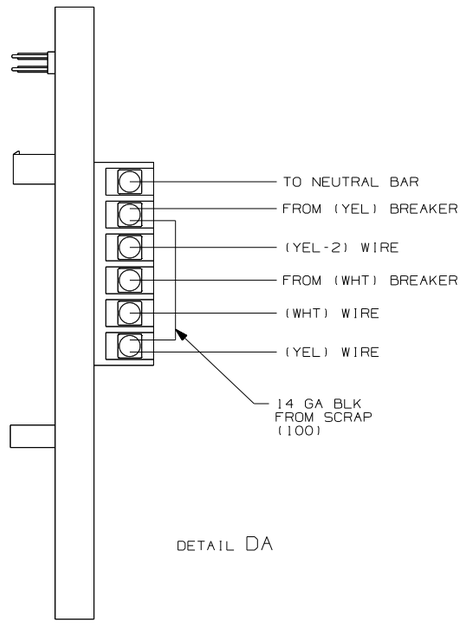

DETAIL DA

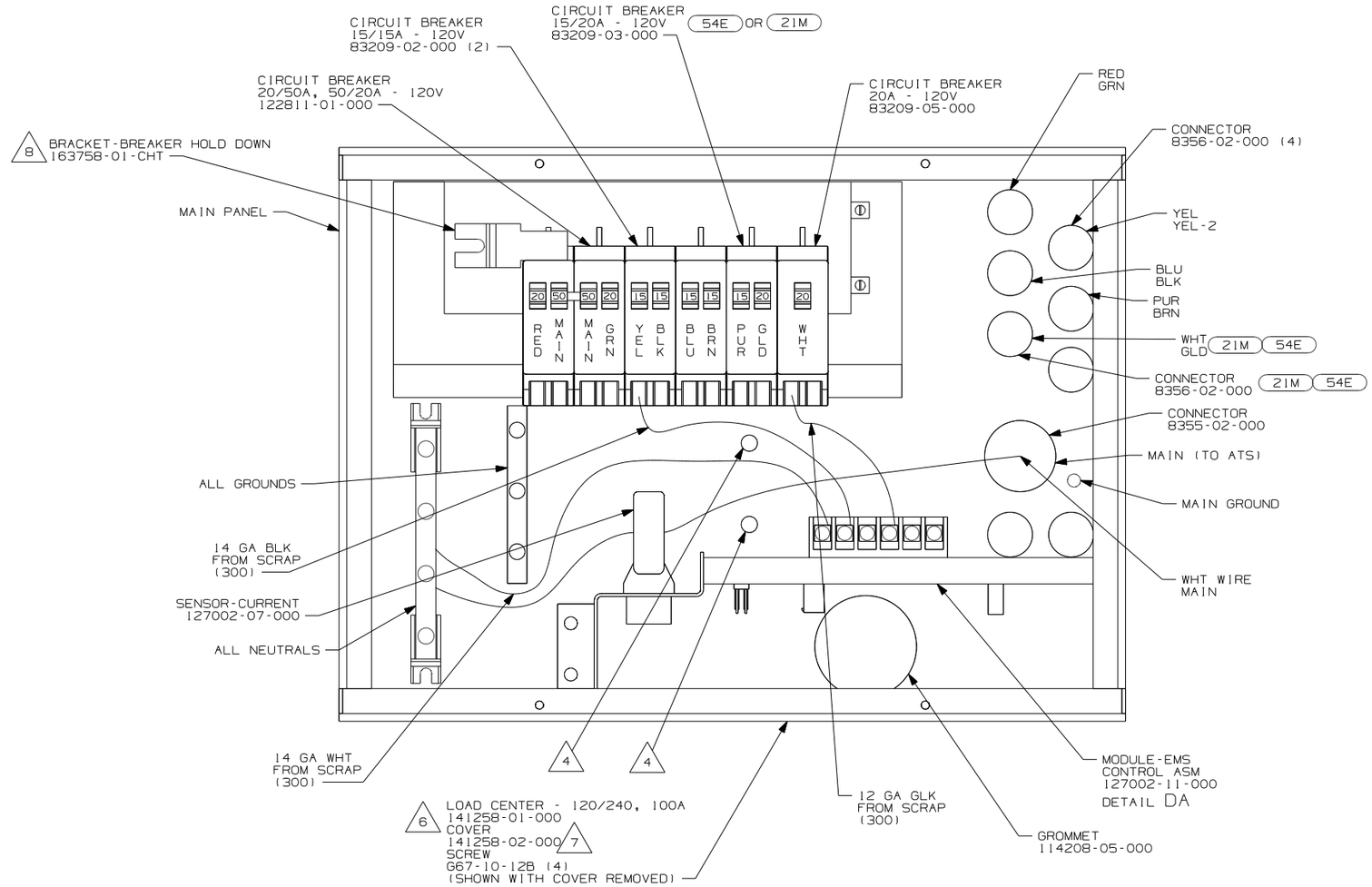

8 LOOSEN LEFT BUSS BAR MOUNTING SCREW, INSERT BRACKET-BREAKER HOLD DOWN UNDER SCREW, ORIENTATE BRACKET TOWARD MAIN BREAKER AS SHOWN AND TIGHTEN SCREW.

7 INSTALLED BY ASSEMBLY LINE.

6 REMOVE 400MM FROM OUTER JACKET ON ALL WIRES ENTERING LOAD CENTER AND TRIM INDIVIDUAL CONDUCTORS AS REQUIRED TO MAKE INTERNAL CONNECTIONS

5 BLACKEN OUT FIRE PLACE WITH BLACK MARKER.

4 ATTACH WIRES TO BACKSIDE OF LOAD CENTER, USE EXISTING HOLES AND TIE-WIRE 116673-01-000.

3. ALL 110V STRANDED WIRE W/O TERMINALS TO BE STRIPPED 10MM AND SOLDER DIPPPED.

2. ALL WIRES ARE NOT SHOWN FOR CLARITY.

1. ALL GROUND WIRES TO BE COVERED WITH TUBING 8041-02-000.

NOTES:

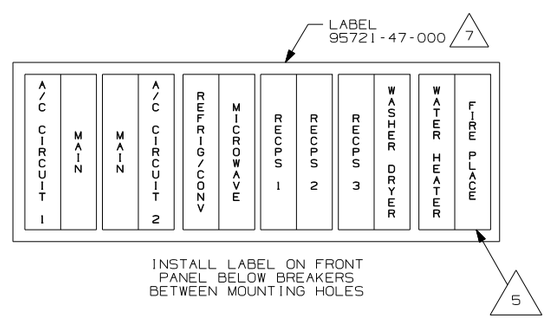

INSTALL LABEL ON FRONT PANEL BELOW BREAKERS BETWEEN MOUNTING HOLES

FOR ELECTRICAL TORQUE SPECIFICATIONS SEE DWG NO. 128783-01-000

X-X FOR ELECTRICAL CALLOUTS SEE DWG NO. 121339-01-000

54E WASHER/DRYER
21M WASHER/DRYER PREP
40D INVERTER-DC/AC,600 WATT
265 CODES/STANDARDS-CSA/CMVSS
1B1 CODES/STANDARDS USA

1B1 265 40D

FIRST USED 07 P-SERIES

DO NOT SCALE DRAWING

TITLE: LOAD CENTER/ATS ASM

SHEET 3 PART NO 157575 REV

DWG NO 157575

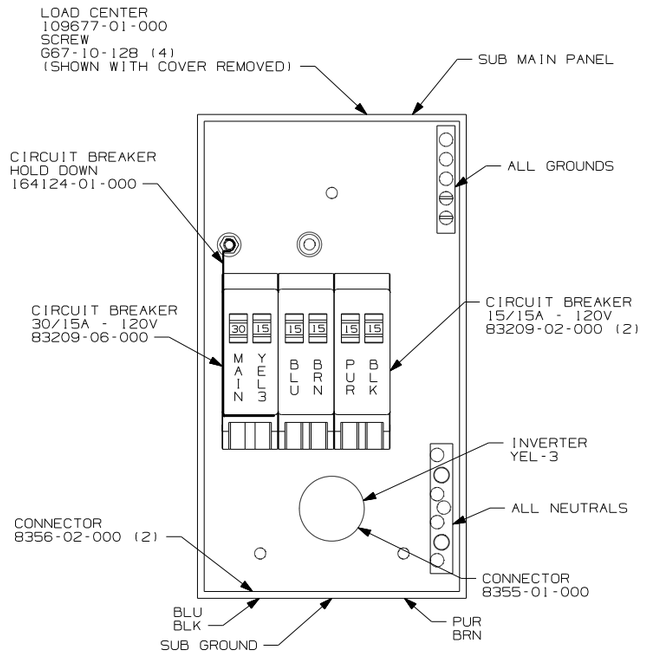

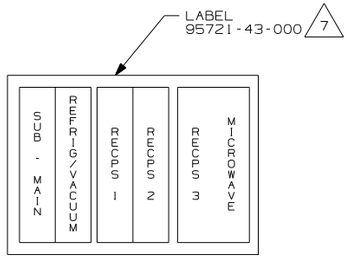

INSTALL LABEL
BELOW PANEL
ON CABINET DOOR

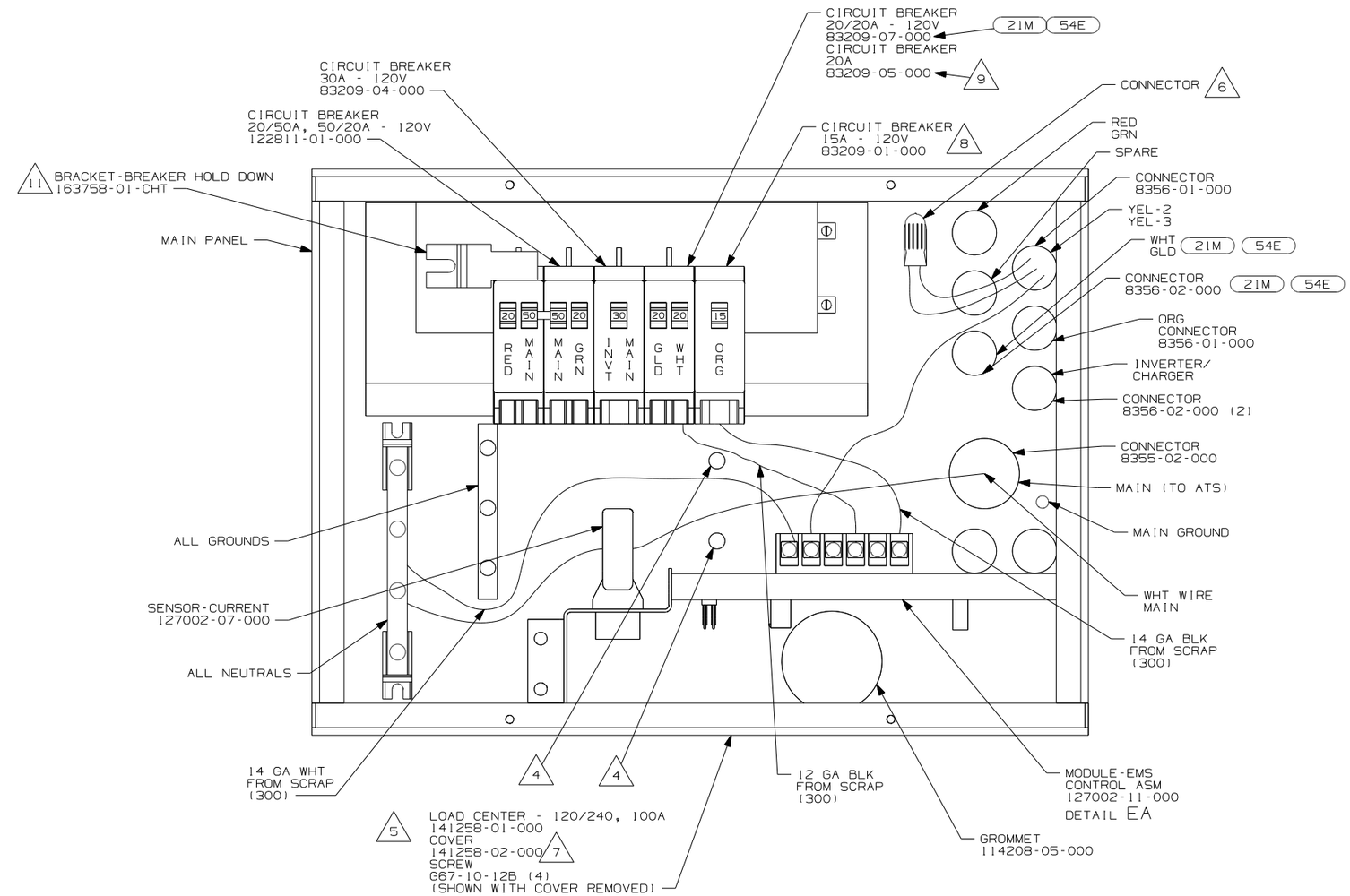

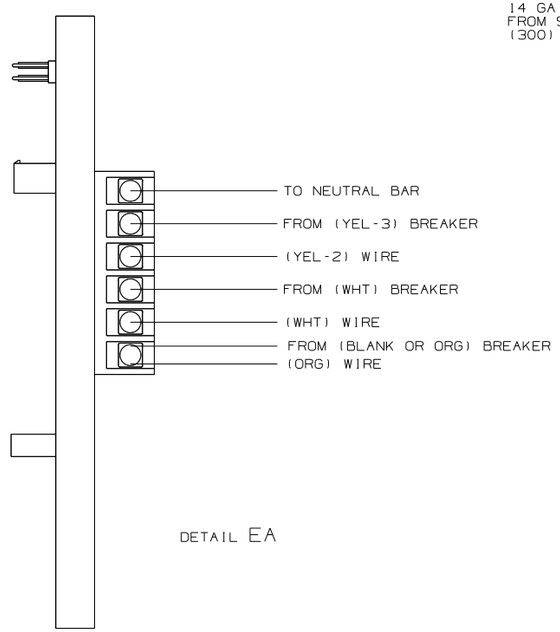

DETAIL EA

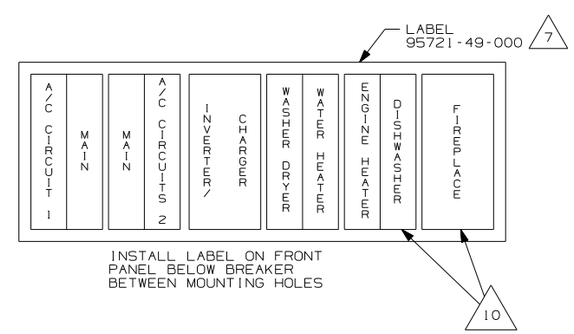

INSTALL LABEL ON FRONT
PANEL BELOW BREAKER
BETWEEN MOUNTING HOLES

NOTES:

1. ALL GROUND WIRES TO BE COVERED WITH TUBING 8041-02-000.
2. ALL WIRES ARE NOT SHOWN FOR CLARITY.
3. ALL 110V STRANDED WIRE W/O TERMINALS TO BE STRIPPED 10MM AND SOLDER DIPPED.
4. ATTACH WIRES TO BACKSIDE OF LOAD CENTER, USE EXISTING HOLES AND TIE-WIRE 116673-01-000.
5. REMOVE 400MM FROM OUTER JACKET ON ALL WIRES ENTERING LOAD CENTER AND TRIM INDIVIDUAL CONDUCTORS AS REQUIRED TO MAKE INTERNAL CONNECTIONS
6. DO NOT CONNECT WHT WIRE FROM YEL-2, YEL-3 CIRCUITS TO NEUTRAL BAR. CONNECT TO EACH OTHER WITH CONNECTOR 8313-01-000 AS SHOWN.
7. INSTALLED BY ASSEMBLY LINE.
8. BREAKER AND JUMPER WIRE NEEDED TO MAKE THE EMS PANEL FUNCTION CORRECTLY.
9. WITHOUT 21M OR 54E
10. BLACKEN OUT DISHWASHER AND FIREPLACE WITH BLACK MARKER.
11. LOOSEN LEFT BUSS BAR MOUNTING SCREW, INSERT BRACKET-BREAKER HOLD DOWN UNDER SCREW, ORIENTATE BRACKET TOWARD MAIN BREAKER AS SHOWN AND TIGHTEN SCREW.

54E WASHER/DRYER
21M WASHER/DRYER PREP
13X INVERTER/CHARGER 2.0 KW
78J ELECTRICAL SYSTEM-50 AMP
265 CODES/STANDARDS-CSA/CMVSS
1B1 CODES/STANDARDS USA

1B1 265 78J 13X

FOR ELECTRICAL TORQUE SPECIFICATIONS SEE DWG NO. 128783-01-000

X-X FOR ELECTRICAL CALLOUTS SEE DWG NO. 121339-01-000

FIRST USED 07 P-SERIES

DO NOT SCALE DRAWING

TITLE: LOAD CENTER/ATS ASM

SHEET 4 PART NO 157575 REV

DWG NO 157575

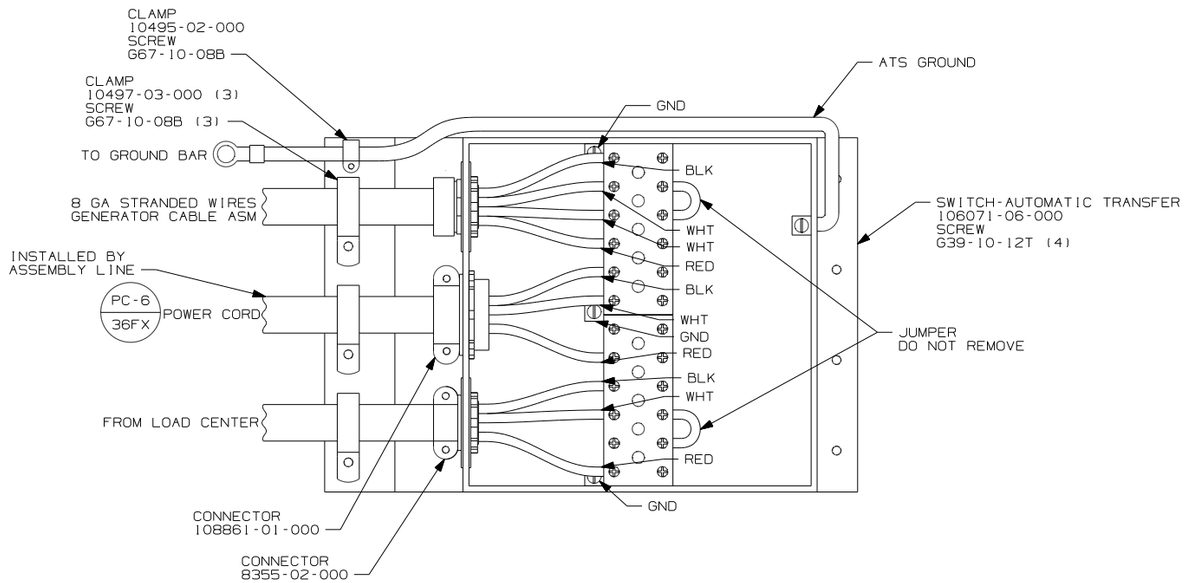

265 CODES/STANDARDS-CSA/CMVSS

181 CODES/STANDARDS USA

181 265

FIRST USED

07 P-SERIES

DO NOT SCALE DRAWING

TITLE:

LOAD CENTER/ATS ASM

SHEET 5

PART NO 157575

REV

FOR ELECTRICAL TORQUE SPECIFICATIONS SEE DWG NO. 128783-01-000

X-X

FOR ELECTRICAL CALLOUTS SEE DWG NO. 121339-01-000

RELEASE	REV A	DATE	DWG NO 138913
REV	ZONE	REVISION RECORD	DATE / DFTR-ORIG

WITHOUT HEAT PUMP

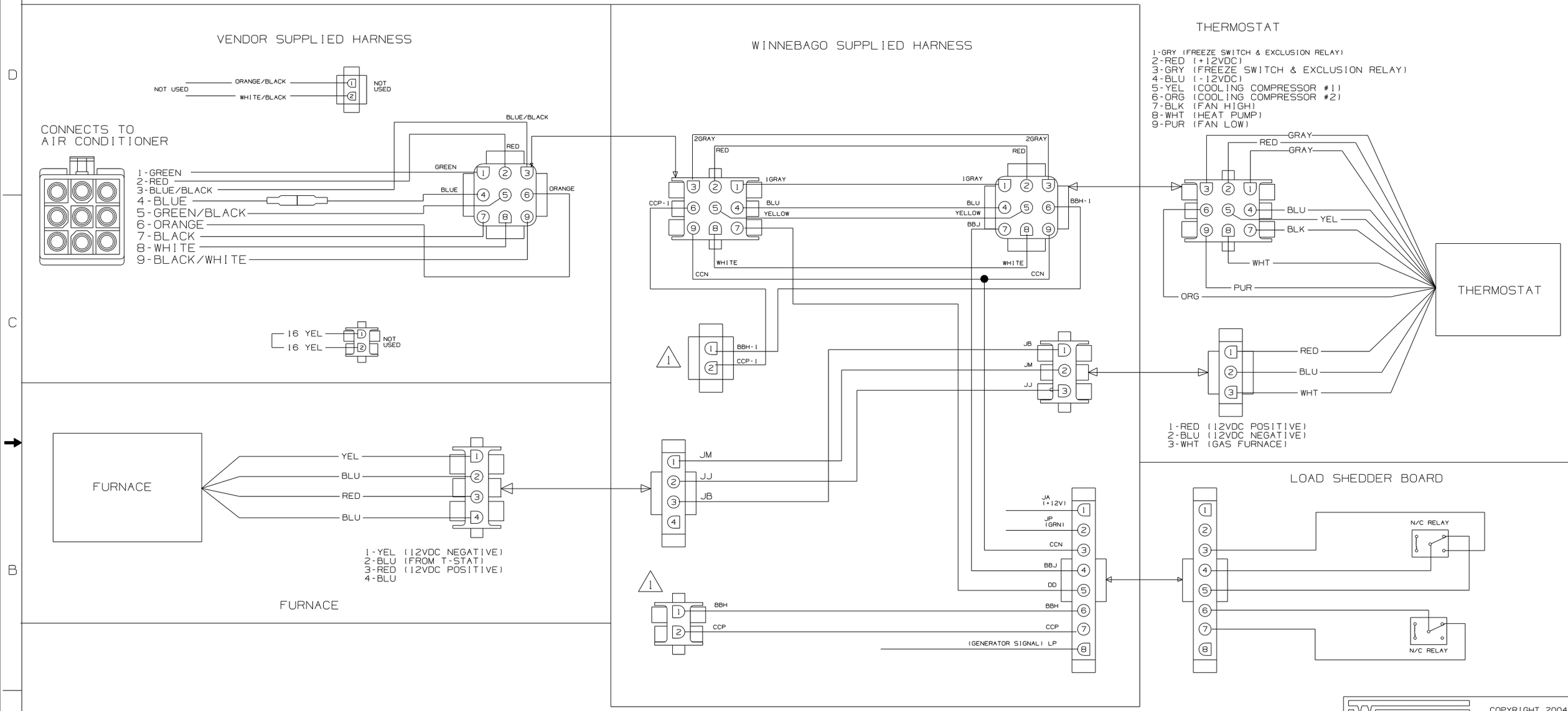

WIRING DIAGRAM-THERMOSTAT,EXT
(WIRE ASM 135131
WITHOUT HEAT PUMP)

1. CONNECT HOUSING TOGETHER.

NOTES:

DFTR	ORIG. DATE
CHKR	ALL DIMENSIONS ARE IN MILLIMETERS
P.E.	
M.E.	FIRST USED
DSNR	03 SERIES

UNSPECIFIED TOLERANCES ARE:
WHOLE DIM (X) :
ONE-PLACE (X.X) :
TWO-PLACE (X.XX) :
ANGLE :
THIRD ANGLE PROJECTION

MATERIAL:

DO NOT SCALE DRAWING

TITLE: WIRING DIAGRAM-AC/HEAT/EMS

SHEET 1 OF 2 | PART NO 138913

DWG NO 138913

WITH HEAT PUMP

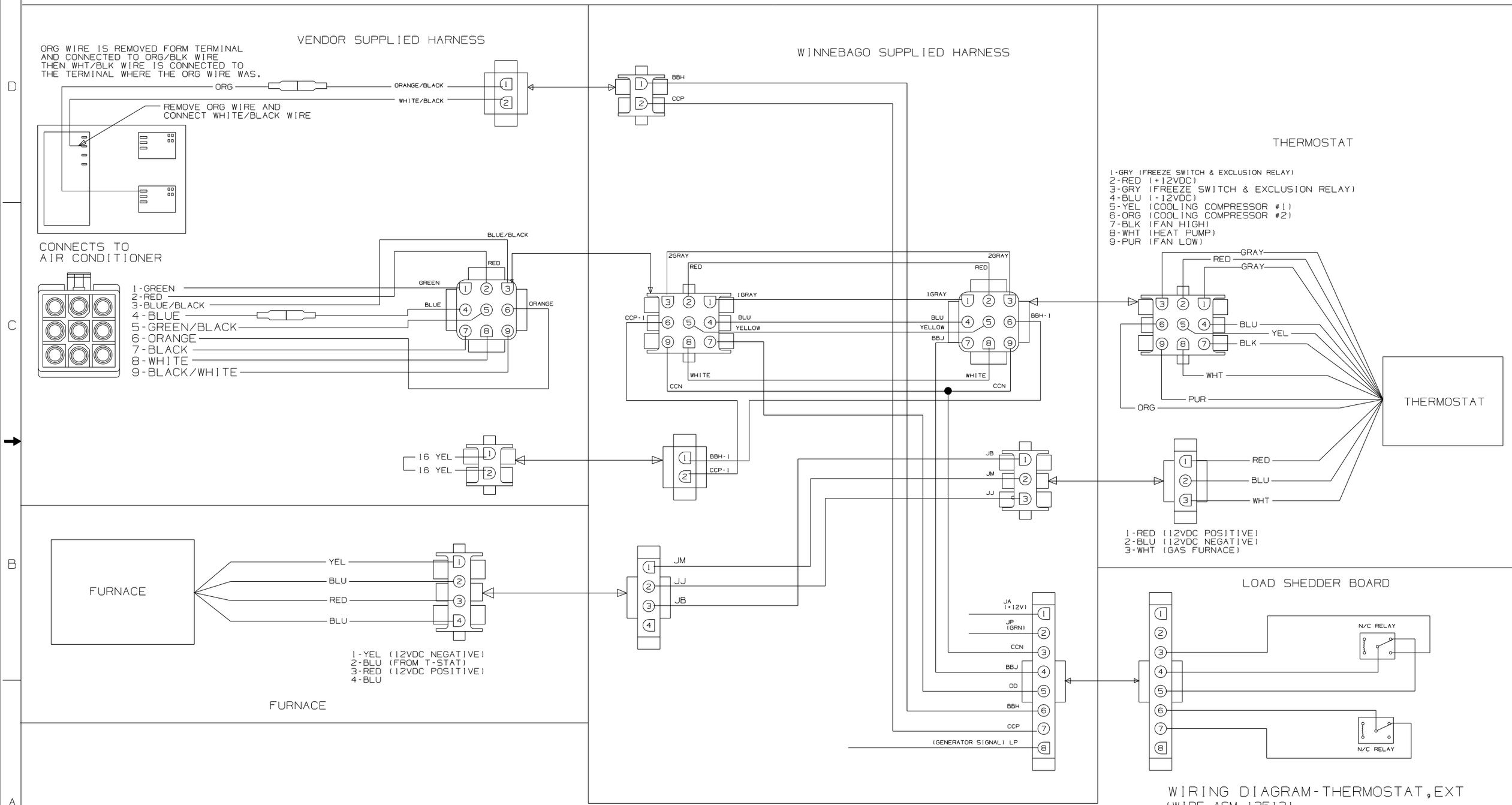

WIRING DIAGRAM-THERMOSTAT,EXT
(WIRE ASM 135131
WITH HEAT PUMP)

1. RLC FOR 2001 THIS RESET WAS DELETED.

NOTES:

FIRST USED	03 SERIES
	DO NOT SCALE DRAWING
TITLE:	WIRING DIAGRAM-AC/HEAT/EMS
SHEET 2	PART NO 138913

DWG NO	SHEET	SERIES
156329-01	1	200
156329-02	2	300
156329-03	3	500
156329-04	4	700
156329-05	5	D,E,F,G
156329-06	6	P,S,R

RELEASE	REV A	DATE	DWG NO 156329

REV	ZONE	REVISION RECORD	DATE	DFTR-ORIG

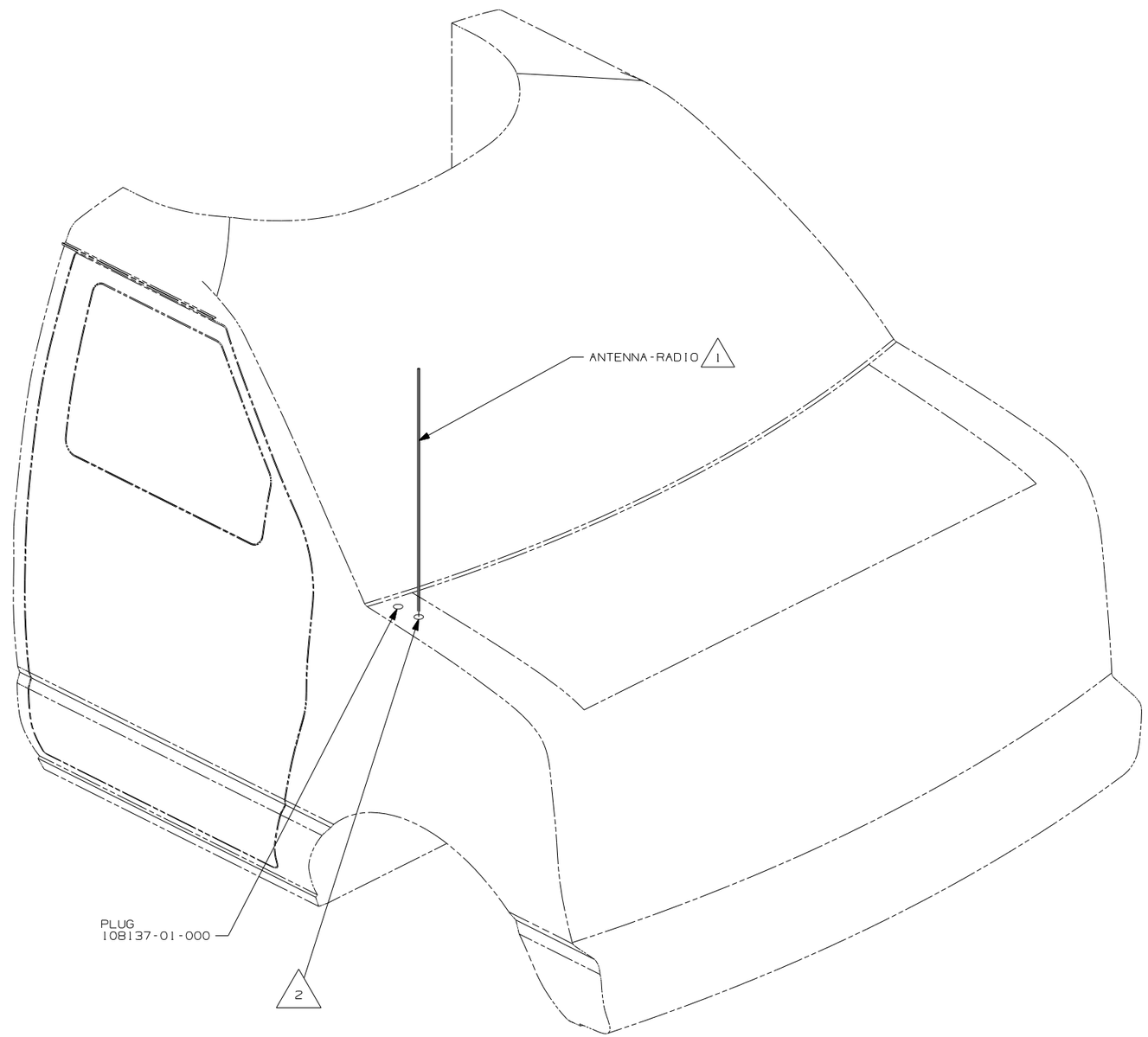

2 SEE CHASSIS-MODIFIED DRAWING FOR HOLE LOCATION AND SIZE.

1 SUPPLIED WITH CHASSIS.

NOTES:

DFTR	ORIG. DATE
CHKR	ALL DIMENSIONS ARE IN MILLIMETERS
P.E.	
M.E.	FIRST USED
DSNR	07 MOTORHOMES

UNSPECIFIED TOLERANCES ARE:
WHOLE DIM (X) :
ONE-PLACE (X.X) :
TWO-PLACE (X.XX) :
ANGLE :

THIRD ANGLE PROJECTION

MATERIAL:

DO NOT SCALE DRAWING

TITLE:
ANTENNA INSTL-RADIO AND CB

SHEET 1 OF 6 | PART NO 156329 | REV

REF: 1 8/16/2006

DWG NO 156329

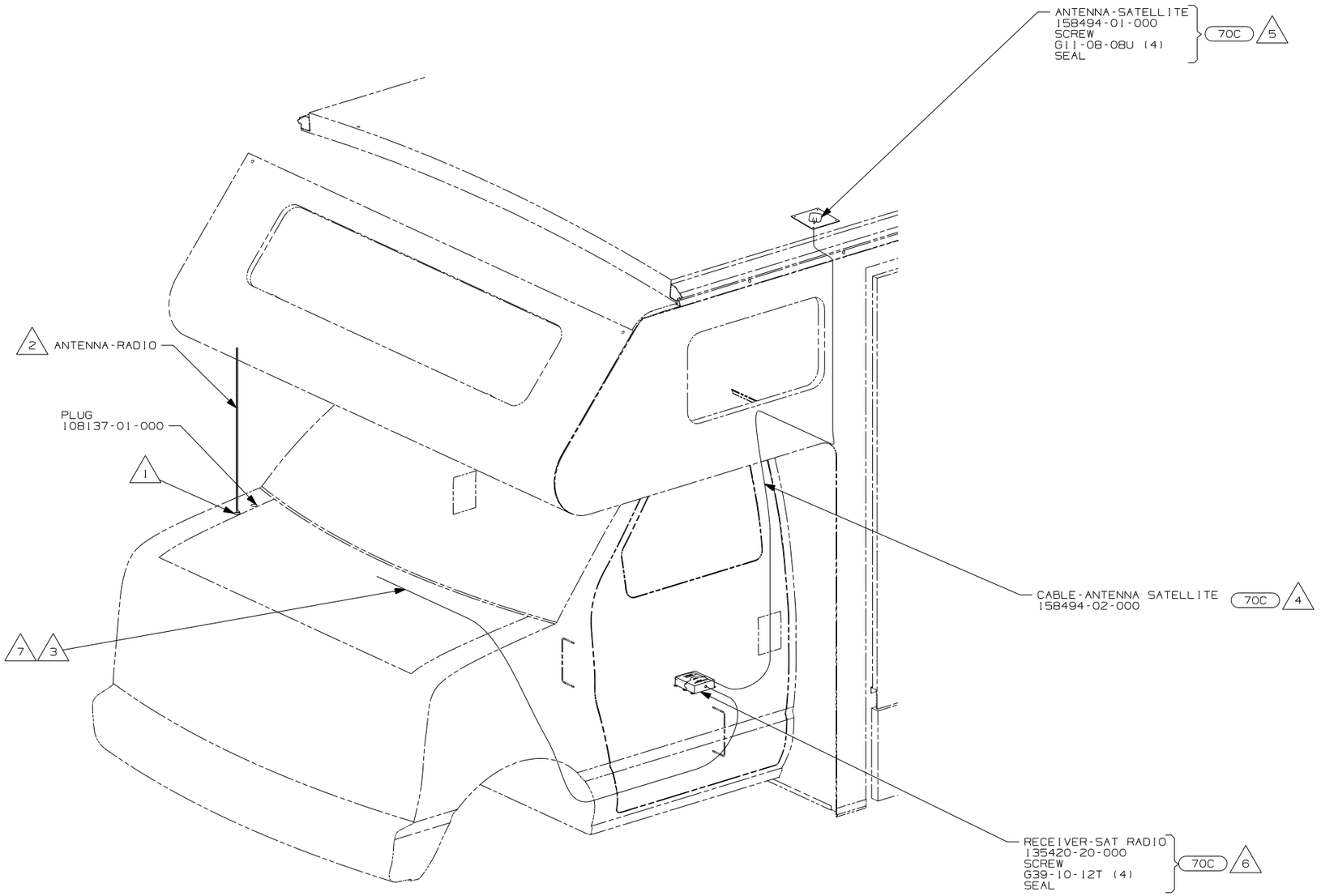

NOTES:

7. RECEIVER CABLE SUPPLIED WITH RECEIVER.
6. MOUNT RECEIVER TO CAB FLOOR UNDER DRIVERS SEAT NEXT TO FORD MODULE. BE SURE NOT TO SCREW THROUGH ANY WIRES THAT GO TO THE MODULE. SEAL ALL SCREWS.
5. MOUNT ANTENNA SUCH THAT BASE IS SQUARE WITH ROOF AND HOLE IS DIRECTLY OVER HOLE IN ROOF. SEAL BOTH THE HOLE IN THE ROOF AND ANTENNA BASE AT SCREWS.
4. ON 300-SER ROUTE ANTENNA CABLE FROM UNDER DRIVER'S SEAT UP B-POST, INTO WINGWALL, THROUGH SLEEP BOARD ASM TO ANTENNA HOLE IN ROOF ASM.
3. ROUTE RECEIVER CABLE ALONG WITH CHASSIS HARNASS TO BATTERY BOOST SWITCH, CONTINUE RECEIVER CABLE TO DASH RADIO.
2. SUPPLIED WITH CHASSIS.
1. SEE CHASSIS-MODIFIED DRAWING FOR HOLE LOCATION AND SIZE.

FIRST USED 07 MOTORHOMES

DO NOT SCALE DRAWING

TITLE: ANTENNA INSTL-RADIO AND CB

SHEET 2 | PART NO 156329 | REV

DWG NO 156329

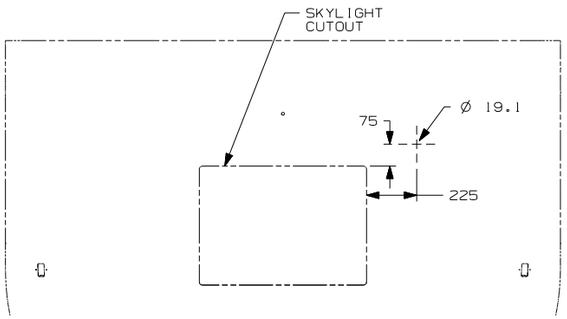

DETAIL DA (70C)

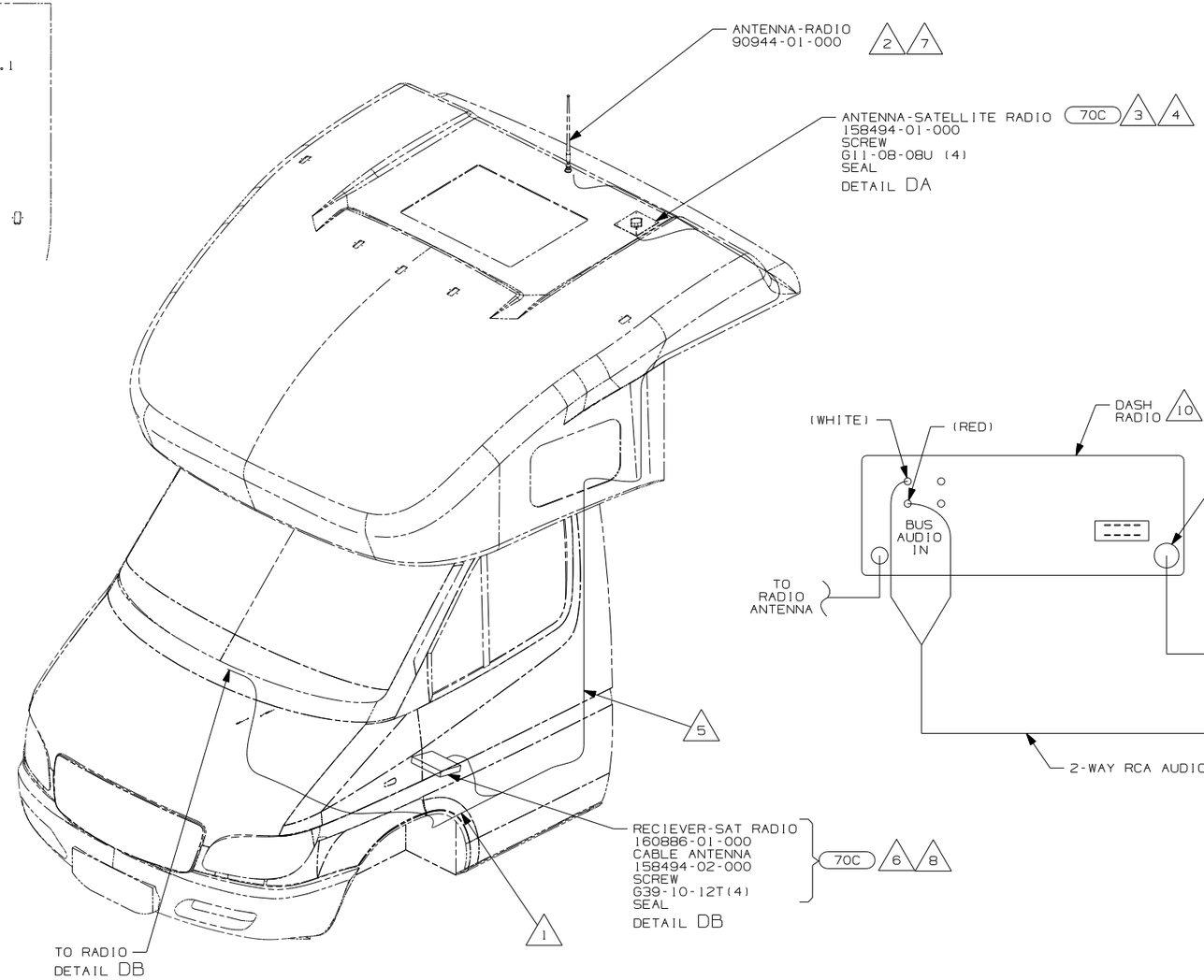

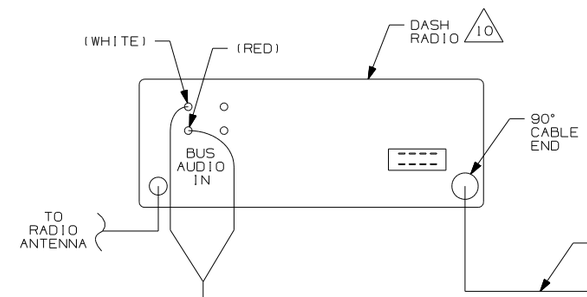

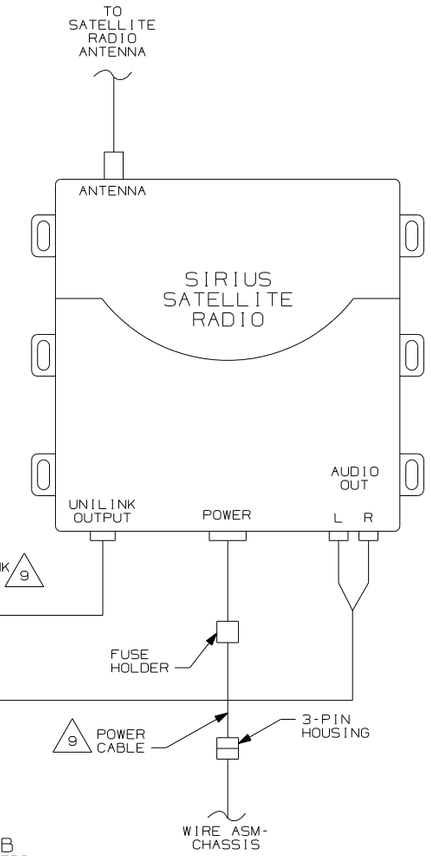

DETAIL DB
UNDER DRIVERS SEAT

NOTES:

10 SEE RADIO INSTL FOR ADDITIONAL INFORMATION

9 SUPPLLIED WITH SATELITE RADIO RECIEVER

8 CONNECT UNILINK CABLE SUPPLIED WITH SATELLITE RECEIVER BETWEEN DASH RADIO AND SATELLITE RECEIVER TERMINAL LABELED 'OUTPUT'.

7 CUT AND REMOVE A 75MM X 75MM AREA OF THE ALUMINUM INSULATION, CENTERED ABOUT THE RADIO ANTENNA ROOF CAP.

6 MOUNT RECIEVER TO FLOOR UNDER DRIVER'S SEAT. SEAL ALL SCREWS.

5 ROUTE SATELLITE RADIO ANTENNA CABLE ALONG B-POST TO BENEATH DRIVERS SEAT TO SATELLITE RADIO RECIEVER. PLUG ANTENNA CABLE INTO RECEIVER TERMINAL LABELED 'ANTENNA'.

4 SEE WIRE INSTL-CHASSIS FOR ADDITIONAL INFORMATION.

3 MOUNT ANTENNA SUCH THAT BASE IS SQUARE W/REAR OF ROOF CAP & CENTER HOLE OF ANTENNA DIRECTLY OVER HOLE IN FIBERGLASS. SEAL HOLE, BASE, AND SCREWS.

2 SEAL AROUND ANTENNA BASE.

1 ROUTE RADIO ANTENNA CABLE FROM DASH RADIO THROUGH STEP WELL UP B-POST TO ROOF CAP.

(70C) RADIO - SATELLITE

FOR ELECTRICAL TORQUE SPECIFICATIONS SEE DWG NO. 128783-01-000

(X-X) FOR ELECTRICAL CALLOUTS SEE DWG NO. 121339-01-000

FIRST USED 07 MOTOR HOMES

DO NOT SCALE DRAWING

TITLE: ANTENNA INSLT-RADIO AND CB

SHEET 3 | PART NO 156329 | REV

DWG NO 156329

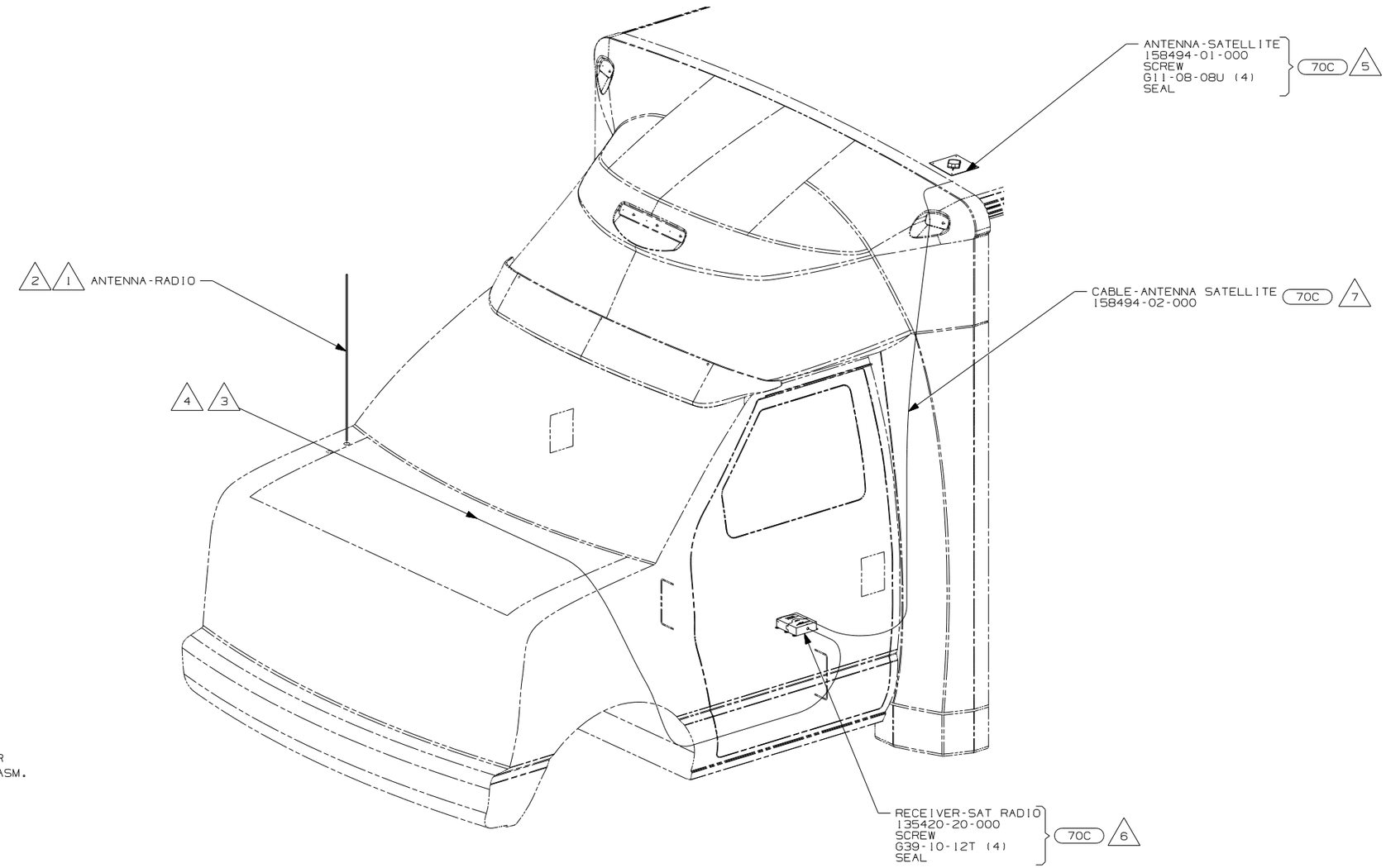

NOTES:

7. ROUTE ANTENNA CABLE FROM UNDER DRIVER'S SEAT UP B-POST, INTO WINGWALL, UP THROUGH ENTERTAINMENT CENTER BEHIND SPEAKER, ROUTE CABLE THROUGH ROUTED PATH IN ROOF ASM.

6. MOUNT RECEIVER TO CAB FLOOR UNDER DRIVERS SEAT NEXT TO FORD MODULE. BE SURE NOT TO SCREW THROUGH ANY WIRES THAT GO TO THE MODULE. SEAL ALL SCREWS.

5. MOUNT ANTENNA SUCH THAT BASE IS SQUARE WITH ROOF AND HOLE IS DIRECTLY OVER HOLE IN ROOF. SEAL BOTH THE HOLE IN THE ROOF AND ANTENNA BASE AT SCREWS.

4. RECEIVER CABLE SUPPLIED WITH RECEIVER.

3. ROUTE RECEIVER CABLE ALONG WITH CHASSIS HARNASS TO BATTERY BOOST SWITCH, CONTINUE RECEIVER CABLE TO DASH RADIO.

2. DO NOT RELOCATE ANTENNA ON 700 SERIES UNITS. LEAVE IN FACTORY LOCATION.

1. SUPPLIED WITH CHASSIS.

70C RADIO - SATELLITE

FIRST USED 07 MOTORHOMES	
DO NOT SCALE DRAWING	
TITLE: ANTENNA INSTL-RADIO AND CB	
SHEET 4	PART NO 156329 REV

DWG NO 156329

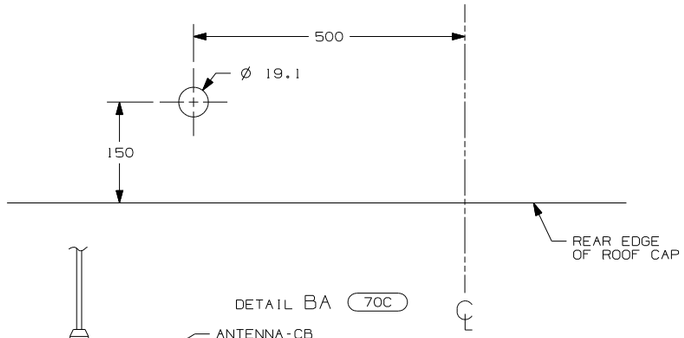

DETAIL BA (70C)

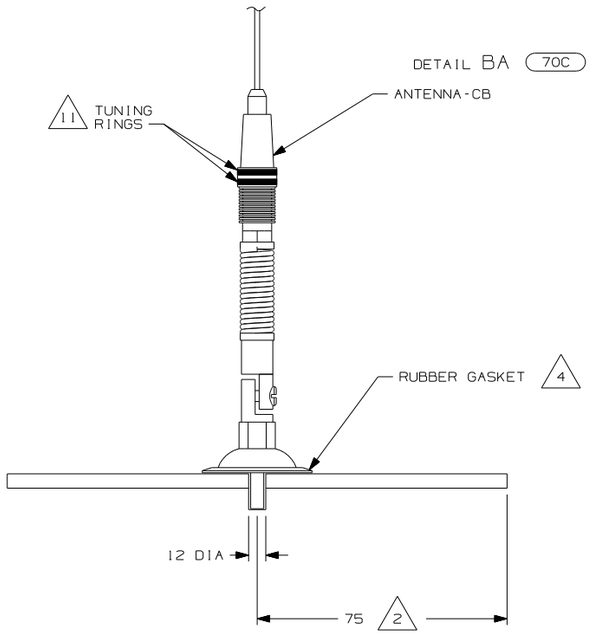

VIEW BC (40J)

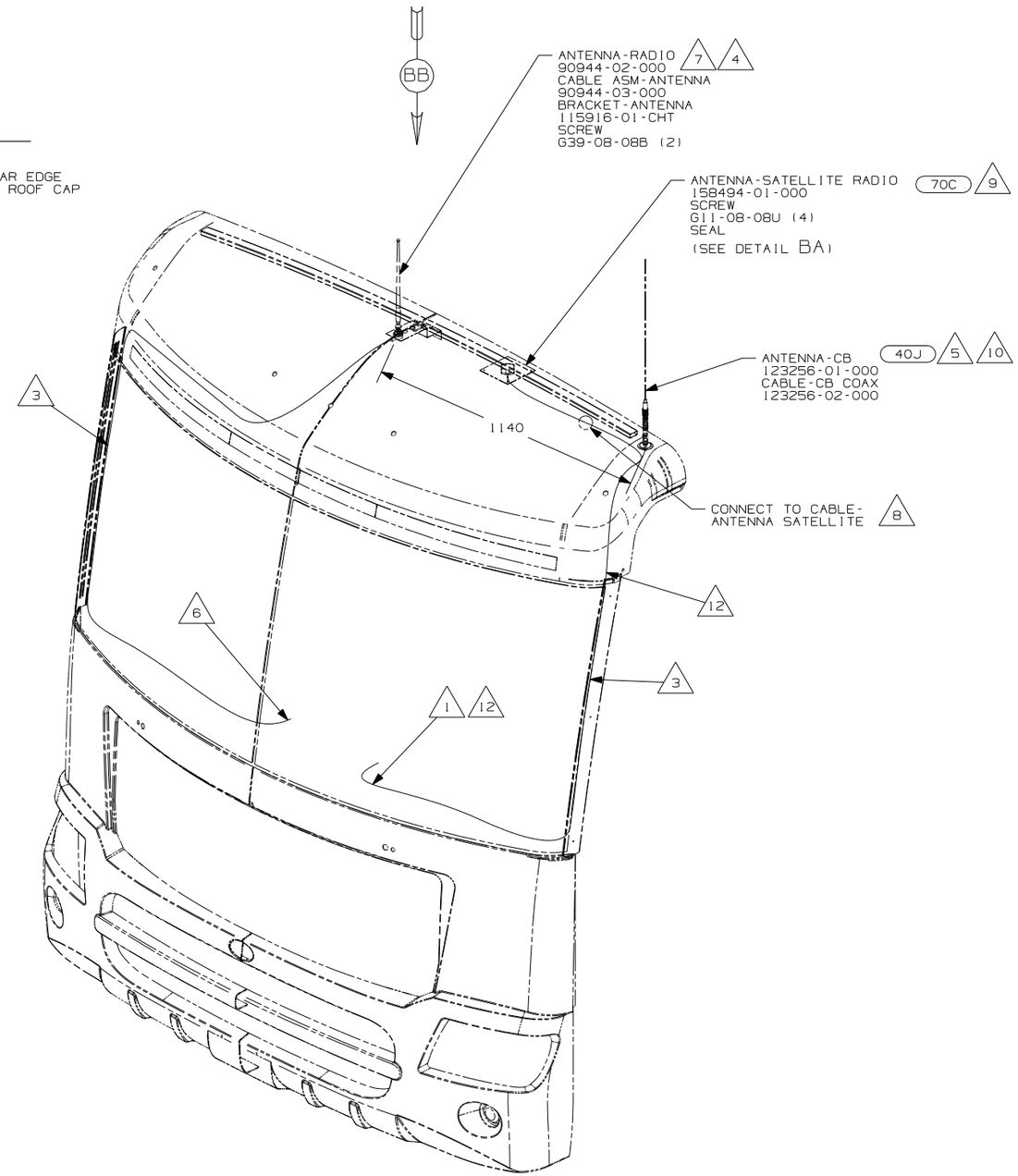

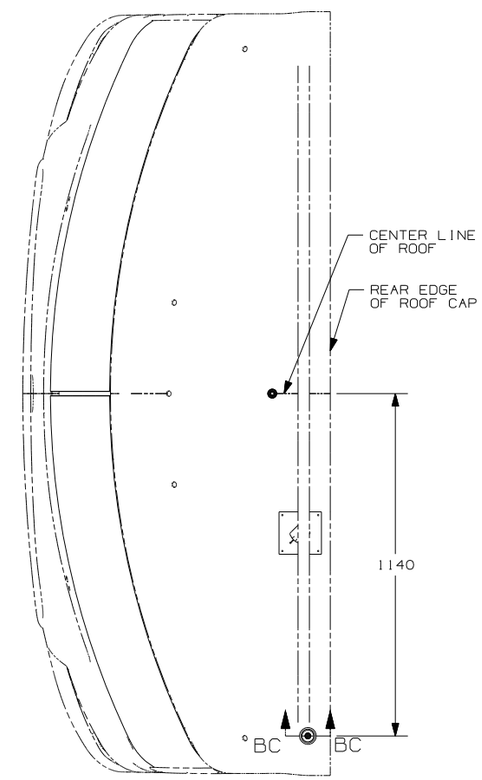

VIEW BB (40J)

NOTES:

12. PROVIDE A 700MM DROP OF CB ANTENNA CABLE FROM THE TOP OF THE A-PILLAR TO CONNECT TO THE ANTENNA AND PLACE THE EXCESS CABLE IN THE CB PREP BAG LOCATED UNDER THE DASH.
11. TUNING RINGS ARE TO BE BOTH ADJUSTED TO THE TOP OF THEIR TRAVEL AND TIGHTENED AGAINST EACH OTHER.
10. TIGHTEN JOINTS BETWEEN ANTENNA BASE AND ANTENNA PIVOT AND ALSO THE MAST AND ATENNA PLATE.
9. MOUNT ANTENNA SUCH THAT BASE IS SQUARE W/ REAR OF ROOF CAP & HOLE IS DIRECTLY OVER HOLE IN FIBERGLASS. SEAL HOLE IN ROOF CAP, BASE AT SCREWS.
8. SEE WIRING INSTL-FRONT END FOR ADDITIONAL INFORMATION.
7. USE HOLE IN BRACKET AS GUIDE TO DRILL 13 DIAMETER HOLE IN FIBERGLASS.
6. TO RADIO.
5. ATTACH ANTENNA-CB GROUND WIRE TO CAB FRAME, USE SCREW G39-08-08B.
4. SEAL AROUND ANTENNA BASE.
3. ROUTE CABLE ALONG A-POST,UNDER TRIM COVER.
2. MEASURED FROM REAR EDGE OF FIBERGLASS CAP.
1. SEE WIRING INSTL-FRONT END FOR LOCATION OF COAX END AND LABEL.

(70C) RADIO - SATELLITE
(40J) CB RADIO PREP

FIRST USED
07 MOTORHOMES

DO NOT SCALE DRAWING

TITLE:
ANTENNA INSTL-RADIO AND CB

SHEET 5 | PART NO 156329 | REV

DWG NO 156329

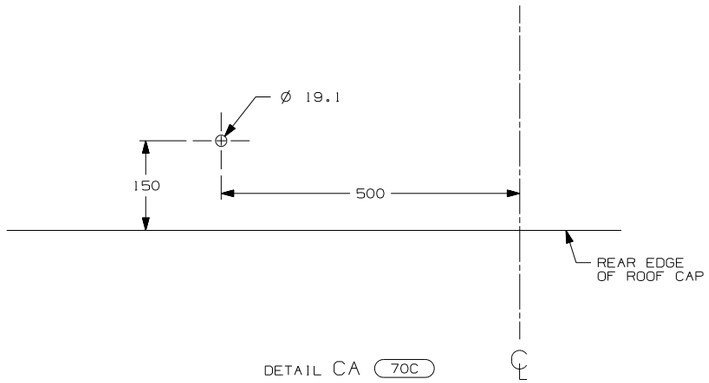

DETAIL CA (70C)

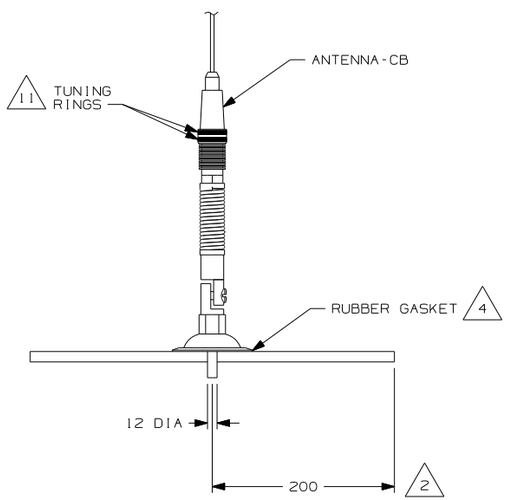

VIEW CC (40C)

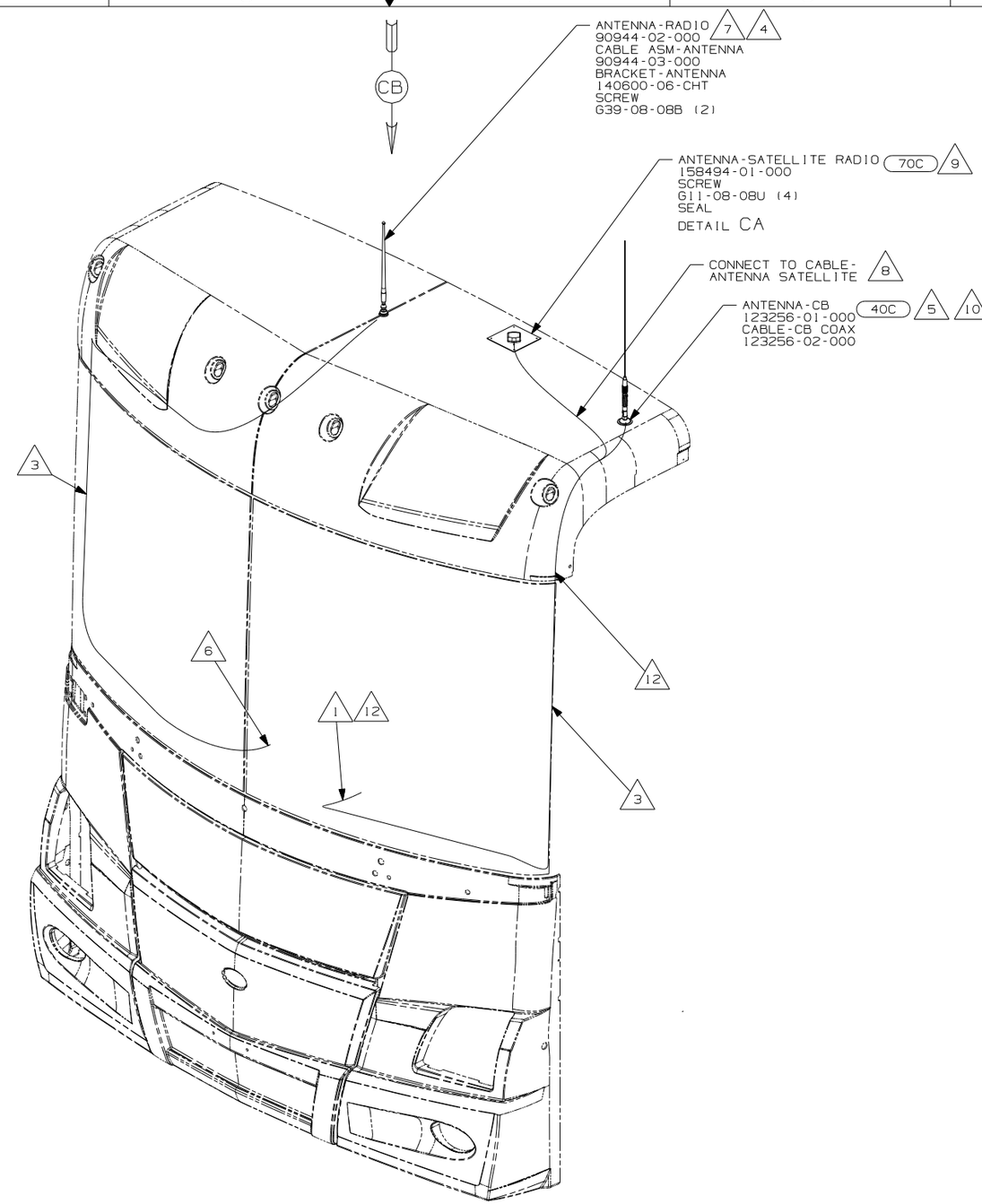

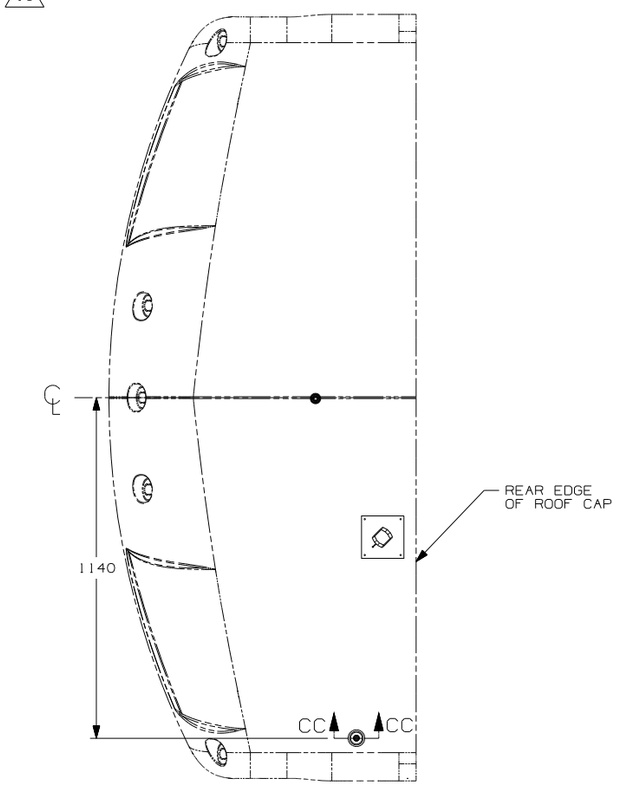

VIEW CB (40C)

12 PROVIDE A 1000 DROP OF CB ANTENNA CABLE FROM THE TOP OF THE A-PILLAR TO CONNECT TO THE ANTENNA AND PLACE THE EXCESS CABLE IN THE CB PREP BAG LOCATED UNDER THE DASH.

11 TUNING RINGS ARE TO BE BOTH ADJUSTED TO THE TOP OF THEIR TRAVEL AND TIGHTENED AGAINST EACH OTHER.

10 TIGHTEN JOINTS BETWEEN ANTENNA BASE AND ANTENNA PIVOT AND ALSO THE MAST AND ANTENNA PLATE.

9 MOUNT ANTENNA SUCH THAT BASE IS SQUARE W/REAR OF ROOF CAP & CENTER HOLE OF ANTENNA DIRECTLY OVER HOLE IN FIBERGLASS. SEAL HOLE, BASE, AND SCREWS.

8 SEE WIRING INSTL-FRONT END FOR ADDITIONAL INFORMATION.

7 USE HOLE IN BRACKET AS GUIDE TO DRILL 13 DIAMETER HOLE IN FIBERGLASS.

6 TO RADIO.

5 ATTACH ANTENNA-CB GROUND WIRE TO CAB FRAME, USE SCREW G39-08-08B.

4 SEAL AROUND ANTENNA BASE.

3 ROUTE CABLE ALONG A-POST,UNDER TRIM COVER.

2 MEASURED FROM REAR EDGE OF FIBERGLASS CAP.

1 SEE WIRING INSTL-FRONT END FOR LOCATION OF COAX END AND LABEL.

NOTES:

(70C) RADIO - SATELLITE

(40C) RADIO - CB

FIRST USED 07 MOTORHOMES	
DO NOT SCALE DRAWING	
TITLE: ANTENNA INSTL-RADIO AND CB	
SHEET 6	PART NO 156329 REV

RELEASE	REV A	DATE	DWG NO 156375

REV	ZONE	REVISION RECORD	DATE	DFTR-ORIG

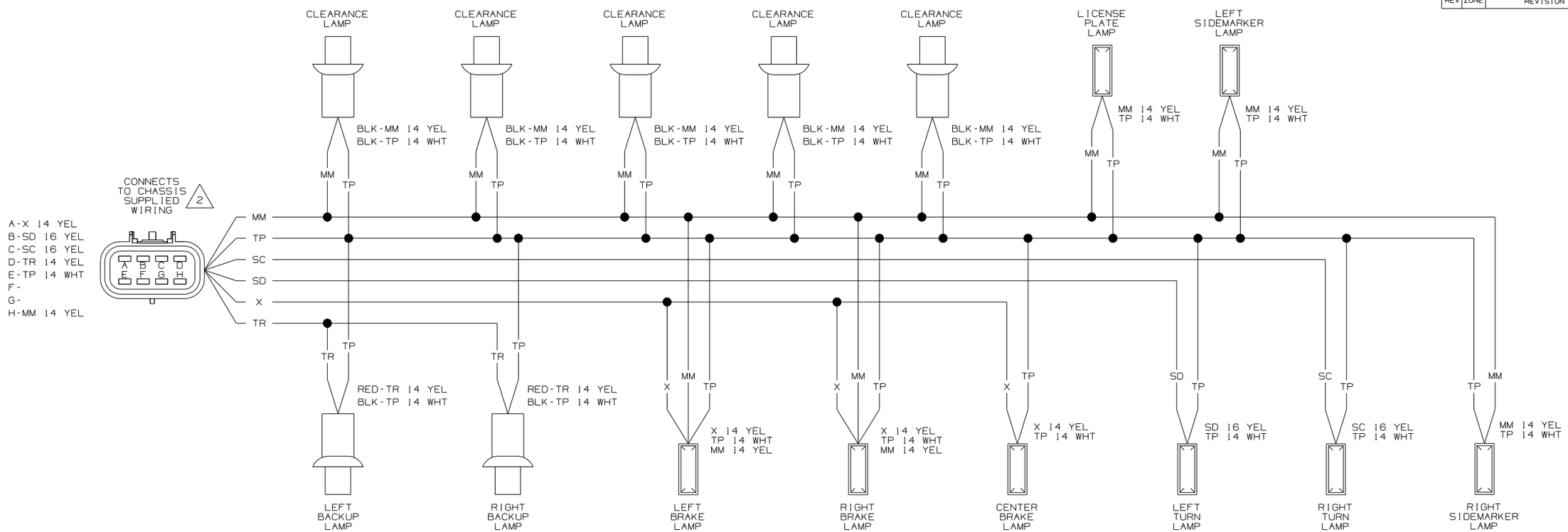

WIRING DIAGRAM-BACKWALL,FL
(WIRE ASM 146189-03 REV-G)
(WINNEBAGO)

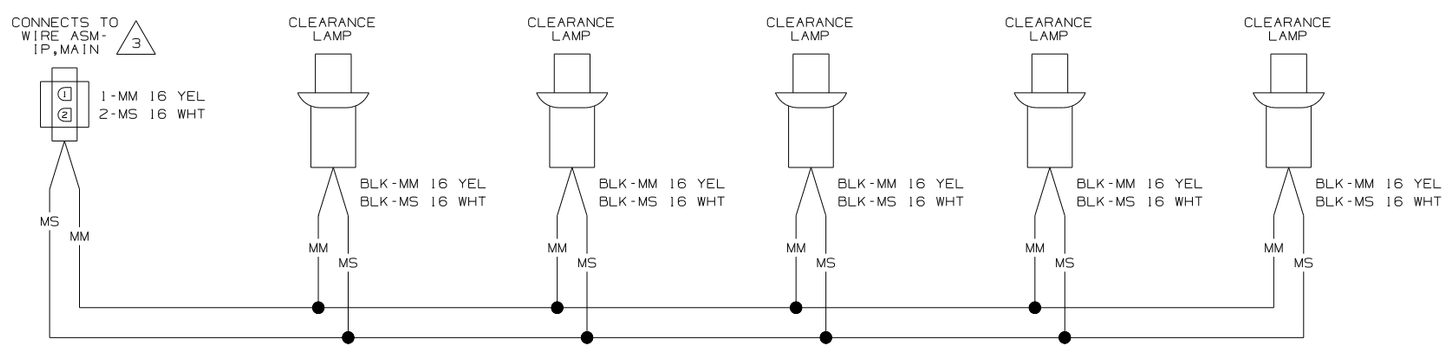

WIRING DIAGRAM-CLEARANCE LAMPS
(WIRE ASM 126486-03 REV-F)
(WINNEBAGO & ITASCA)

3 SEE WIRING DIAGRAM-AUTO FOR ADDITIONAL INFORMATION.

2 SEE MANUFACTURERS DIAGRAM FOR ADDITIONAL INFORMATION.

1. SPLICES ARE THEORETICAL AND MAY DIFFER IN THE HARNESS.

NOTES:

DFTR	ORIG. DATE
CHKR	ALL DIMENSIONS ARE IN MILLIMETERS
P.E.	
M.E.	FIRST USED 07 P-SER
DSNR	

UNSPECIFIED TOLERANCES ARE:
WHOLE DIM (X) :
ONE-PLACE (X.X) :
TWO-PLACE (X.XX) :
ANGLE :

MATERIAL:

THIRD ANGLE PROJECTION

DO NOT SCALE DRAWING

TITLE: WIRING DIAGRAM-AUTO LAMPS

SHEET 1 OF 3 | PART NO 156375 | REV

DWG NO 156375

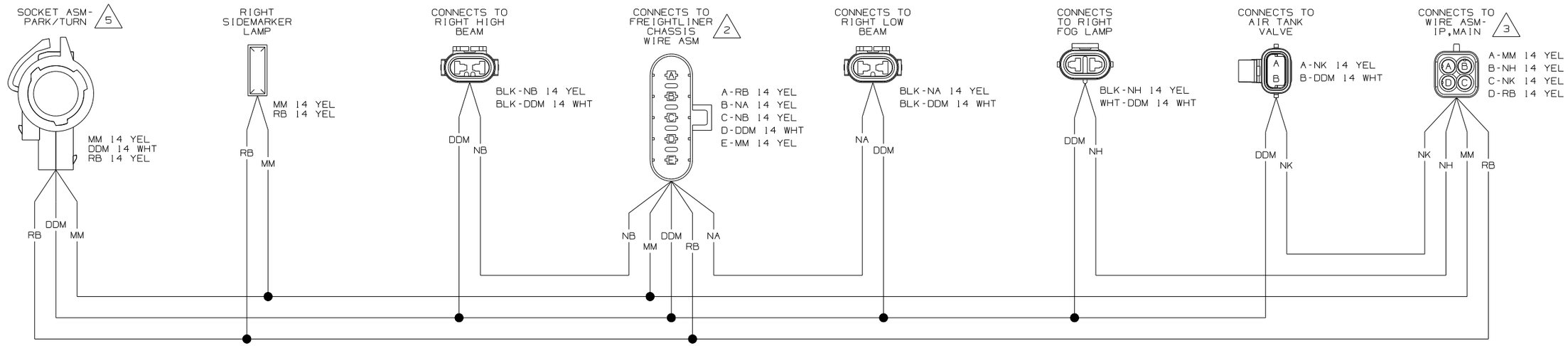

WIRING DIAGRAM-HEADLAMP,RIGHT
(WIRE ASM 144850-04 REV-H)
(WINNEBAGO & ITASCA)

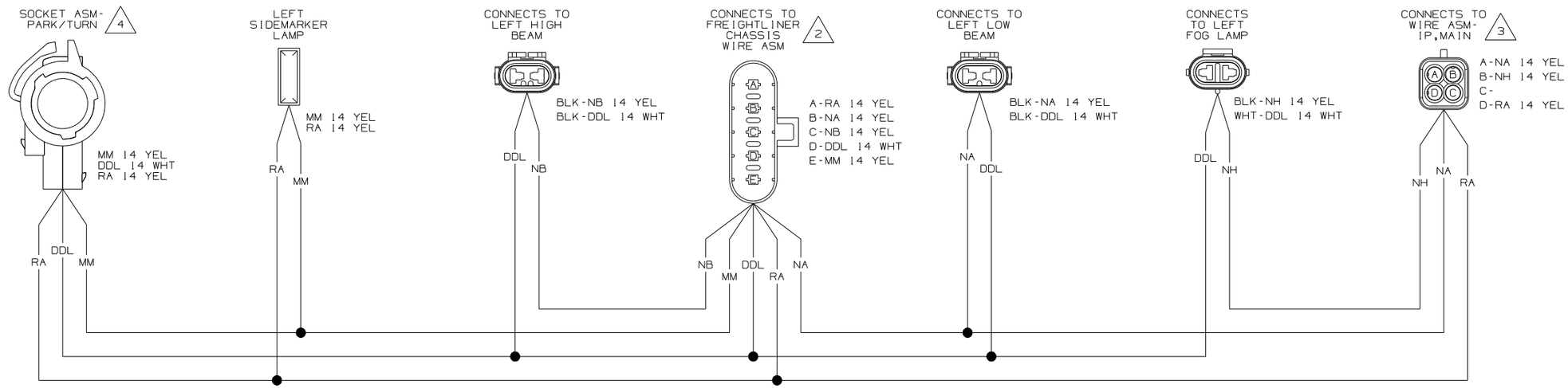

WIRING DIAGRAM-HEADLAMP,LEFT
(WIRE ASM 144850-03 REV-H)
(WINNEBAGO & ITASCA)

5 FOR CIRCUIT CONNECTIONS, SEE DETAIL AB.

4 FOR CIRCUIT CONNECTIONS, SEE DETAIL AA.

3 SEE WIRING DIAGRAM-AUTO FOR ADDITIONAL INFORMATION.

2 SEE MANUFACTURERS DIAGRAM FOR ADDITIONAL INFORMATION.

1. SPLICES ARE THEORETICAL AND MAY DIFFER IN THE HARNESS.

NOTES:

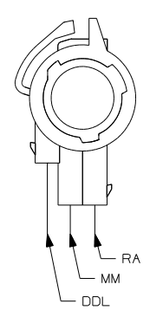

DETAIL AA

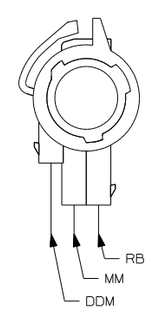

DETAIL AB

FIRST USED	07 P-SER
DO NOT SCALE DRAWING	
TITLE: WIRING DIAGRAM-AUTO LAMPS	
SHEET 2	PART NO 156375 REV

DWG NO 156375

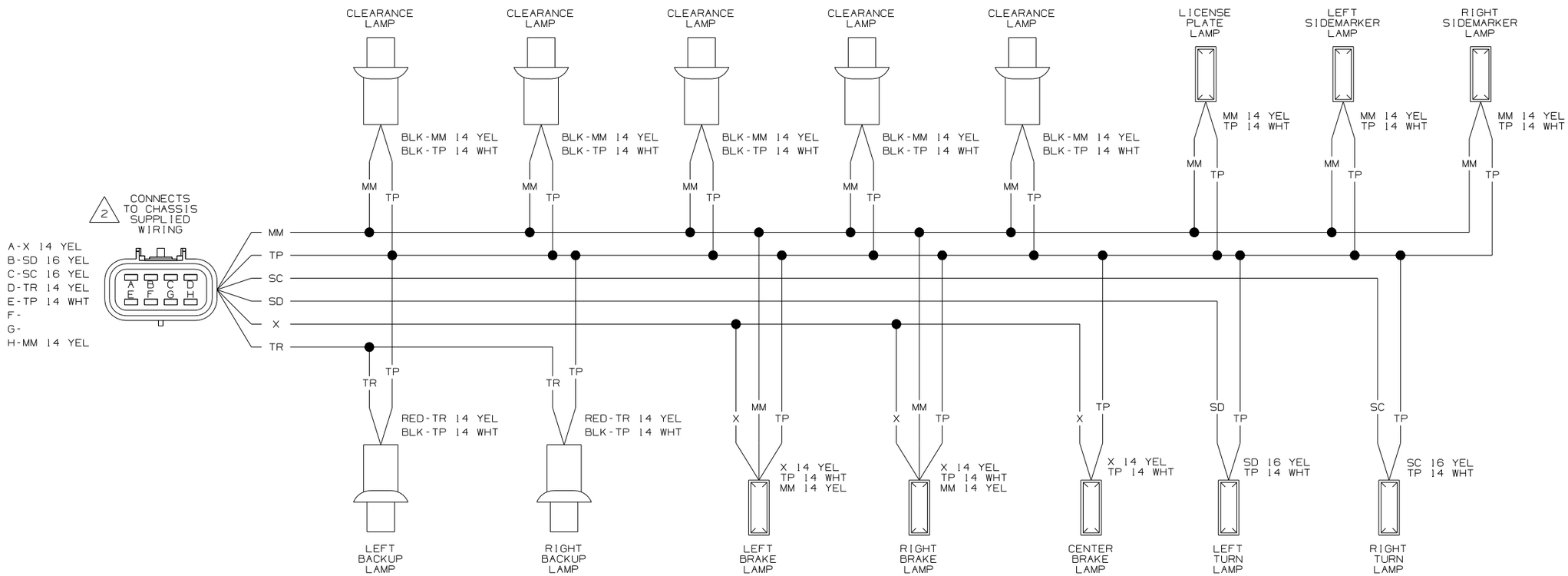

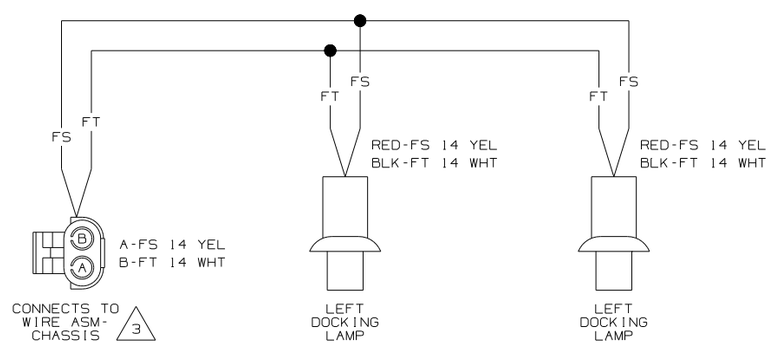

WIRING DIAGRAM-BACKWALL,FL
(WIRE ASM 146189-04 REV-G)
(ITASCA)

3 SEE WIRING DIAGRAM-BODY,12V FOR ADDITIONAL INFORMATION.

2 SEE MANUFACTURERS DIAGRAM FOR ADDITIONAL INFORMATION.

1. SPLICES ARE THEORETICAL AND MAY DIFFER IN THE HARNESS.

NOTES:

FIRST USED	07 P-SER
DO NOT SCALE DRAWING	
TITLE: WIRING DIAGRAM-AUTO LAMPS	
SHEET 3	PART NO 156375 REV

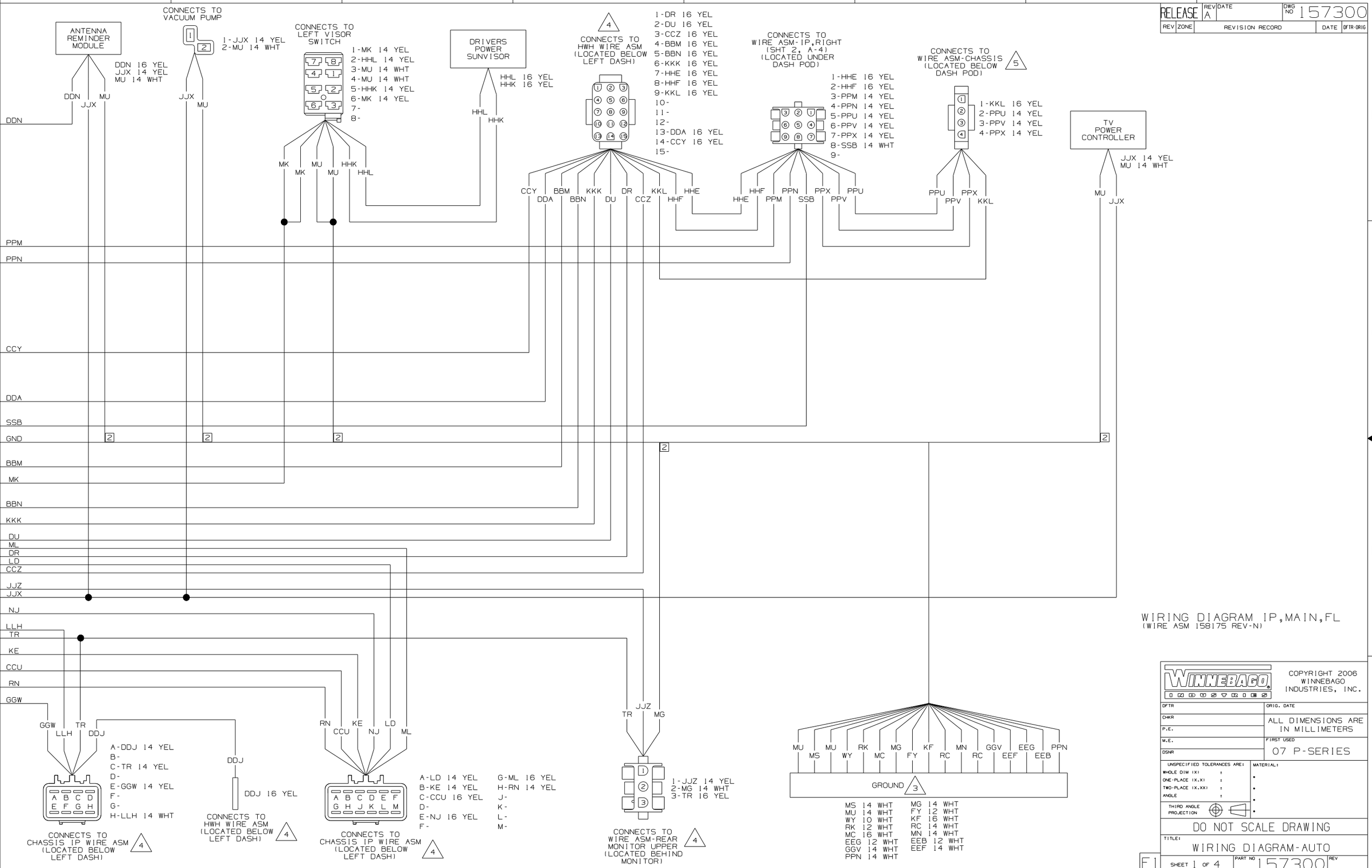
RELEASE
REV A
DATE
DWG NO 157300
REV ZONE REVISION RECORD DATE DFTR-ORIG
ANTENNA REMINDER MODULE
DDN 16 YEL
JJX 14 YEL
MU 14 WHT
CONNECTS TO VACUUM PUMP
1-JJX 14 YEL
2-MU 14 WHT
CONNECTS TO LEFT VISOR SWITCH
1-MK 14 YEL
2-HHL 14 YEL
3-MU 14 WHT
4-MU 14 WHT
5-HHK 14 YEL
6-MK 14 YEL
7-
8-
DRIVERS POWER SUNVISOR
HHL 16 YEL
HHK 16 YEL
CONNECTS TO HWH WIRE ASM (LOCATED BELOW LEFT DASH)
1-DR 16 YEL
2-DU 16 YEL
3-CCZ 16 YEL
4-BBM 16 YEL
5-BBN 16 YEL
6-KKK 16 YEL
7-HHE 16 YEL
8-HHF 16 YEL
9-KKL 16 YEL
10-
11-
12-
13-DDA 16 YEL
14-CCY 16 YEL
15-
CONNECTS TO WIRE ASM-IP,RIGHT (SHT 2, A-4) (LOCATED UNDER DASH POD)
1-HHE 16 YEL
2-HHF 16 YEL
3-PPM 14 YEL
4-PPN 14 YEL
5-PPU 14 YEL
6-PPV 14 YEL
7-PPX 14 YEL
8-SSB 14 WHT
9-
CONNECTS TO WIRE ASM-CHASSIS (LOCATED BELOW DASH POD)
1-KKL 16 YEL
2-PPU 14 YEL
3-PPV 14 YEL
4-PPX 14 YEL
TV POWER CONTROLLER
JJX 14 YEL
MU 14 WHT
DDN
PPM
PPN
CCY
DDA
SSB
GND
BBM
MK
BBN
KKK
DU
ML
DR
LD
CCZ
JJZ
JJX
NJ
LLH
TR
KE
CCU
RN
GGW
A-DDJ 14 YEL
B-
C-TR 14 YEL
D-
E-GGW 14 YEL
F-
G-
H-LLH 14 WHT
CONNECTS TO CHASSIS IP WIRE ASM (LOCATED BELOW LEFT DASH)
DDJ 16 YEL
CONNECTS TO HWH WIRE ASM (LOCATED BELOW LEFT DASH)
A-LD 14 YEL
B-KE 14 YEL
C-CCU 16 YEL
D-
E-NJ 16 YEL
F-
G-ML 16 YEL
H-RN 14 YEL
J-
K-
L-
M-
CONNECTS TO CHASSIS IP WIRE ASM (LOCATED BELOW LEFT DASH)
1-JJZ 14 YEL
2-MG 14 WHT
3-TR 16 YEL
CONNECTS TO WIRE ASM-REAR MONITOR UPPER (LOCATED BEHIND MONITOR)
GROUND
MS 14 WHT
MU 14 WHT
WY 10 WHT
RK 12 WHT
MC 16 WHT
EEG 12 WHT
GGV 14 WHT
PPN 14 WHT
MG 14 WHT
FY 12 WHT
KF 16 WHT
RC 14 WHT
MN 14 WHT
EEB 12 WHT
EEF 14 WHT
WIRING DIAGRAM IP,MAIN,FL
(WIRE ASM 158175 REV-N)
WINNEBAGO
COPYRIGHT 2006 WINNEBAGO INDUSTRIES, INC.
DFTR
CHKR
P.E.
M.E.
DSNR
ORIG. DATE
ALL DIMENSIONS ARE IN MILLIMETERS
FIRST USED
07 P-SERIES
UNSPECIFIED TOLERANCES ARE:
WHOLE DIM (X)
ONE-PLACE (X.X)
TWO-PLACE (X.XX)
ANGLE
MATERIAL:
THIRD ANGLE PROJECTION
DO NOT SCALE DRAWING
TITLE:
WIRING DIAGRAM-AUTO
SHEET 1 OF 4
PART NO 157300
REV
REF: 1

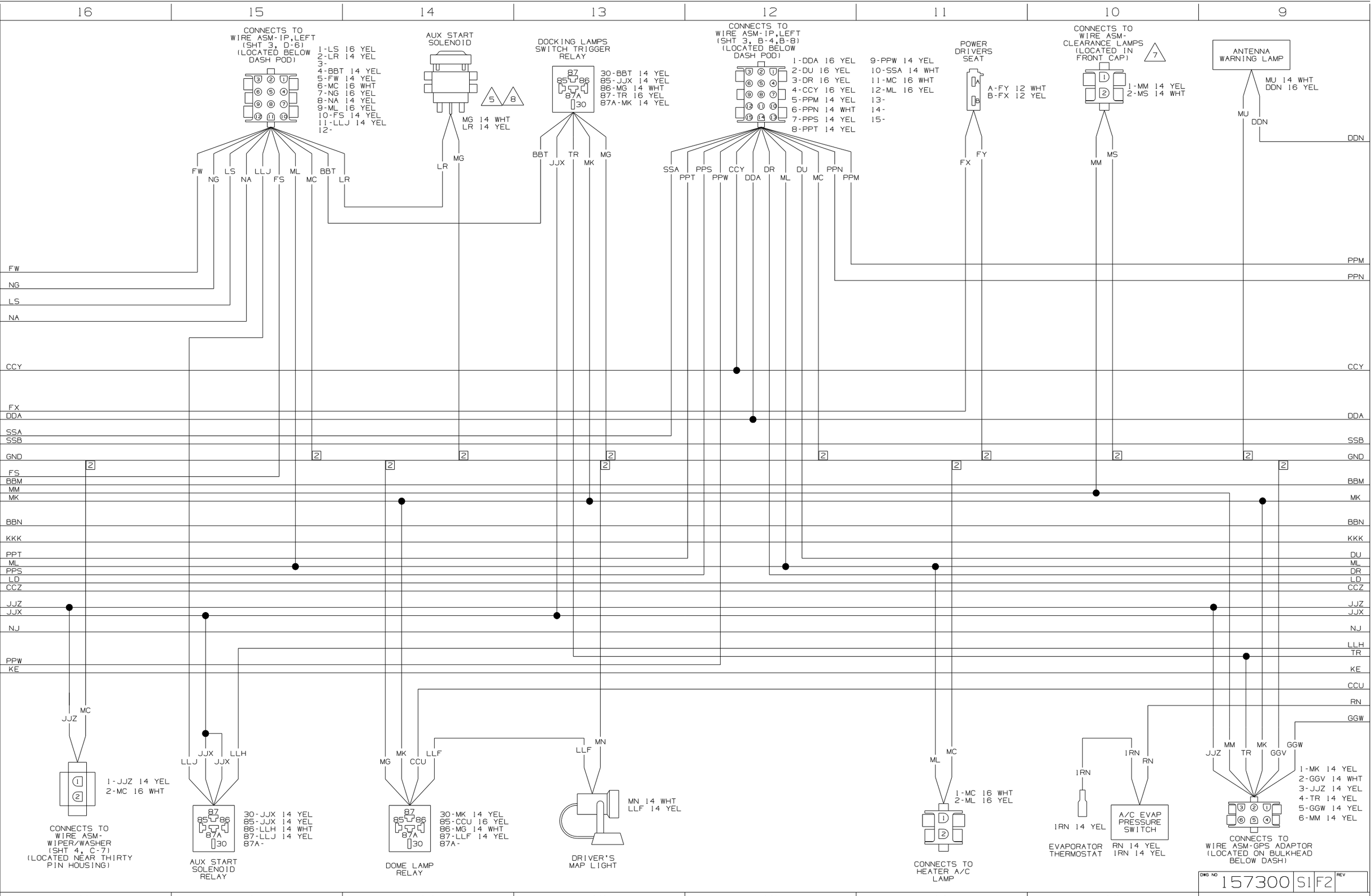
16
15
14
13
12
11
10
9
CONNECTS TO WIRE ASM-IP,LEFT (SHT 3, D-6) (LOCATED BELOW DASH POD)
1-LS 16 YEL
2-LR 14 YEL
3-
4-BBT 14 YEL
5-FW 14 YEL
6-MC 16 WHT
7-NG 16 YEL
8-NA 14 YEL
9-ML 16 YEL
10-FS 14 YEL
11-LLJ 14 YEL
12-
AUX START SOLENOID
MG 14 WHT
LR 14 YEL
DOCKING LAMPS SWITCH TRIGGER RELAY
30-BBT 14 YEL
85-JJX 14 YEL
86-MG 14 WHT
87-TR 16 YEL
87A-MK 14 YEL
CONNECTS TO WIRE ASM-IP,LEFT (SHT 3, B-4,B-8) (LOCATED BELOW DASH POD)
1-DDA 16 YEL
2-DU 16 YEL
3-DR 16 YEL
4-CCY 16 YEL
5-PPM 14 YEL
6-PPN 14 WHT
7-PPS 14 YEL
8-PPT 14 YEL
9-PPW 14 YEL
10-SSA 14 WHT
11-MC 16 WHT
12-ML 16 YEL
13-
14-
15-
POWER DRIVERS SEAT
A-FY 12 WHT
B-FX 12 YEL
CONNECTS TO WIRE ASM-CLEARANCE LAMPS (LOCATED IN FRONT CAP)
1-MM 14 YEL
2-MS 14 WHT
ANTENNA WARNING LAMP
MU 14 WHT
DDN 16 YEL
FW
NG
LS
NA
LLJ
FS
ML
MC
BBT
LR
MG
BBT
JJX
TR
MK
MG
SSA
PPT
PPS
PPW
CCY
DDA
DR
ML
DU
MC
PPN
PPM
FX
FY
MM
MS
MU
DDN
CCY
DDA
SSB
GND
FS
BBM
MM
MK
BBN
KKK
PPT
ML
PPS
LD
CCZ
JJZ
JJX
NJ
PPW
KE
DU
DR
LLH
TR
CCU
RN
GGW
JJZ
MC
1-JJZ 14 YEL
2-MC 16 WHT
CONNECTS TO WIRE ASM-WIPER/WASHER (SHT 4, C-7) (LOCATED NEAR THIRTY PIN HOUSING)
LLJ
JJX
JJX
LLH
30-JJX 14 YEL
85-JJX 14 YEL
86-LLH 14 WHT
87-LLJ 14 YEL
87A-
AUX START SOLENOID RELAY
MG
MK
CCU
LLF
30-MK 14 YEL
85-CCU 16 YEL
86-MG 14 WHT
87-LLF 14 YEL
87A-
DOME LAMP RELAY
LLF
MN
MN 14 WHT
LLF 14 YEL
DRIVER'S MAP LIGHT
ML
MC
1-MC 16 WHT
2-ML 16 YEL
CONNECTS TO HEATER A/C LAMP
IRN
IRN 14 YEL
EVAPORATOR THERMOSTAT
IRN
RN
A/C EVAP PRESSURE SWITCH
RN 14 YEL
IRN 14 YEL
JJZ
MM
TR
MK
GGV
GGW
1-MK 14 YEL
2-GGV 14 WHT
3-JJZ 14 YEL
4-TR 14 YEL
5-GGW 14 YEL
6-MM 14 YEL
CONNECTS TO WIRE ASM-GPS ADAPTOR (LOCATED ON BULKHEAD BELOW DASH)
DWG NO
157300
S1
F2
REV
7/13/2006
20

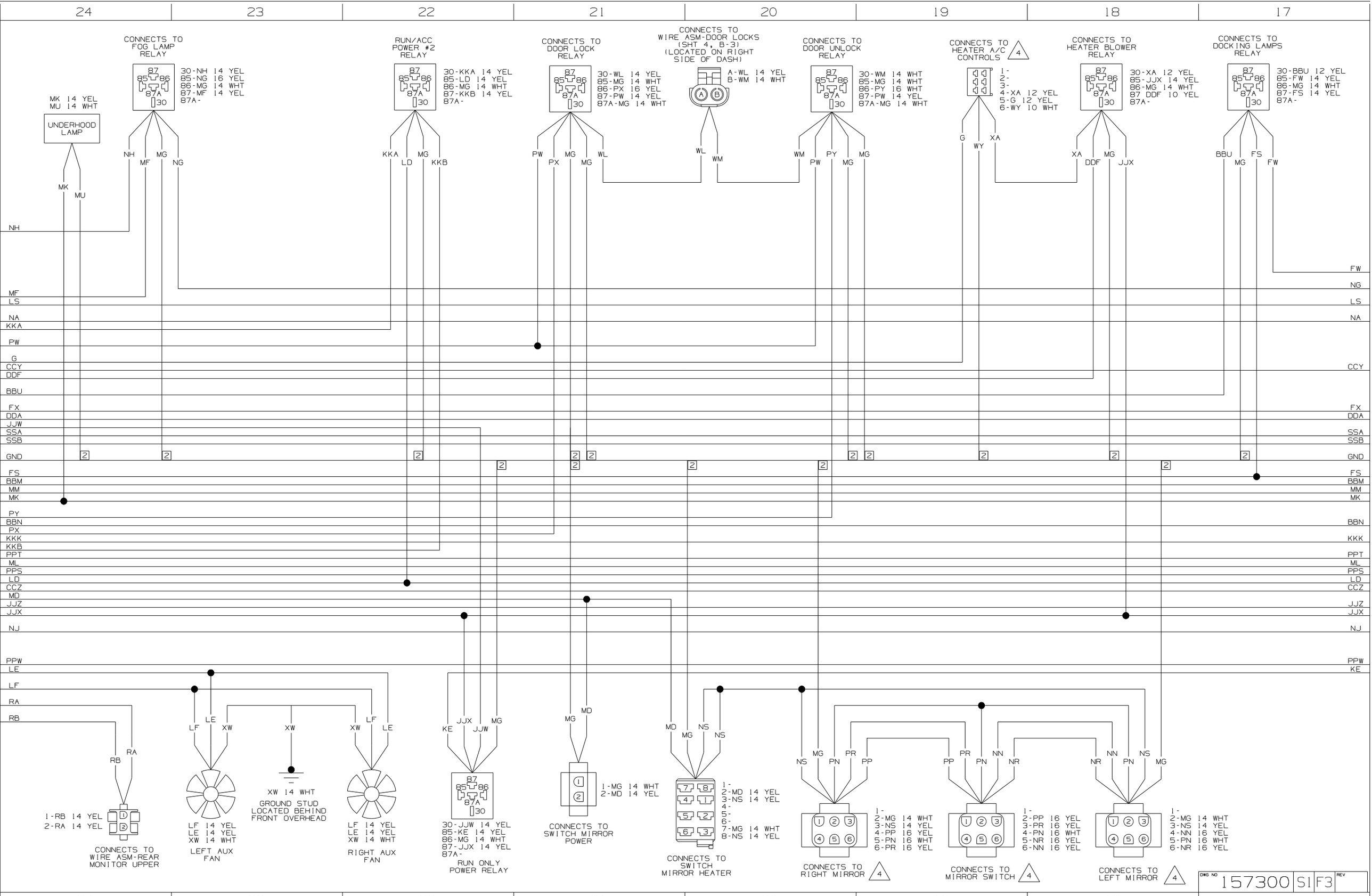
24
23
22
21
20
19
18
17
CONNECTS TO FOG LAMP RELAY
30-NH 14 YEL
85-NG 16 YEL
86-MG 14 WHT
87-MF 14 YEL
87A-
MK 14 YEL
MU 14 WHT
UNDERHOOD LAMP
RUN/ACC POWER #2 RELAY
30-KKA 14 YEL
85-LD 14 YEL
86-MG 14 WHT
87-KKB 14 YEL
87A-
CONNECTS TO DOOR LOCK RELAY
30-WL 14 YEL
85-MG 14 WHT
86-PX 16 YEL
87-PW 14 YEL
87A-MG 14 WHT
CONNECTS TO WIRE ASM-DOOR LOCKS (SHT 4, B-3) (LOCATED ON RIGHT SIDE OF DASH)
A-WL 14 YEL
B-WM 14 WHT
CONNECTS TO DOOR UNLOCK RELAY
30-WM 14 WHT
85-MG 14 WHT
86-PY 16 WHT
87-PW 14 YEL
87A-MG 14 WHT
CONNECTS TO HEATER A/C CONTROLS
1-
2-
3-
4-XA 12 YEL
5-G 12 YEL
6-WY 10 WHT
CONNECTS TO HEATER BLOWER RELAY
30-XA 12 YEL
85-JJX 14 YEL
86-MG 14 WHT
87 DDF 10 YEL
87A-
CONNECTS TO DOCKING LAMPS RELAY
30-BBU 12 YEL
85-FW 14 YEL
86-MG 14 WHT
87-FS 14 YEL
87A-
NH
MF
LS
NA
KKA
PW
G
CCY
DDF
BBU
FX
DDA
JJW
SSA
SSB
GND
FS
BBM
MM
MK
PY
BBN
PX
KKK
KKB
PPT
ML
PPS
LD
CCZ
MD
JJZ
JJX
NJ
PPW
LE
LF
RA
RB
1-RB 14 YEL
2-RA 14 YEL
CONNECTS TO WIRE ASM-REAR MONITOR UPPER
LF 14 YEL
LE 14 YEL
XW 14 WHT
LEFT AUX FAN
XW 14 WHT
GROUND STUD LOCATED BEHIND FRONT OVERHEAD
LF 14 YEL
LE 14 YEL
XW 14 WHT
RIGHT AUX FAN
30-JJW 14 YEL
85-KE 14 YEL
86-MG 14 WHT
87-JJX 14 YEL
87A-
RUN ONLY POWER RELAY
1-MG 14 WHT
2-MD 14 YEL
CONNECTS TO SWITCH MIRROR POWER
1-
2-MD 14 YEL
3-NS 14 YEL
4-
5-
6-
7-MG 14 WHT
8-NS 14 YEL
CONNECTS TO SWITCH MIRROR HEATER
1-
2-MG 14 WHT
3-NS 14 YEL
4-PP 16 YEL
5-PN 16 WHT
6-PR 16 YEL
CONNECTS TO RIGHT MIRROR
1-
2-PP 16 YEL
3-PR 16 YEL
4-PN 16 WHT
5-NR 16 YEL
6-NN 16 YEL
CONNECTS TO MIRROR SWITCH
1-
2-MG 14 WHT
3-NS 14 YEL
4-NN 16 YEL
5-PN 16 WHT
6-NR 16 YEL
CONNECTS TO LEFT MIRROR
DWG NO 157300 S1 F3 REV
7/13/2006 21

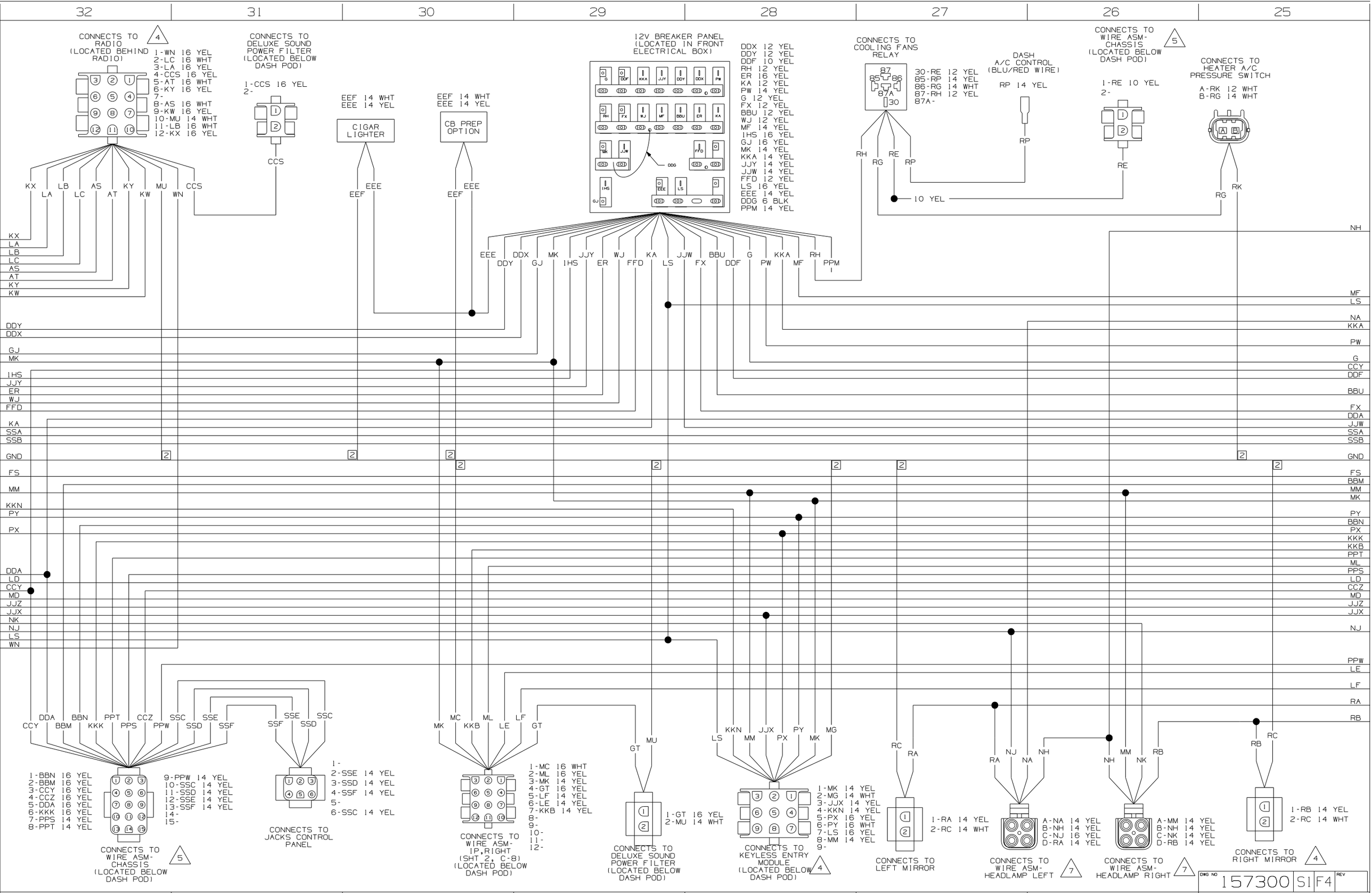
32
31
30
29
28
27
26
25
CONNECTS TO RADIO (LOCATED BEHIND RADIO)
4
1-WN 16 YEL
2-LC 16 WHT
3-LA 16 YEL
4-CCS 16 YEL
5-AT 16 WHT
6-KY 16 YEL
7-
8-AS 16 WHT
9-KW 16 YEL
10-MU 14 WHT
11-LB 16 WHT
12-KX 16 YEL
CONNECTS TO DELUXE SOUND POWER FILTER (LOCATED BELOW DASH POD)
1-CCS 16 YEL
2-
CCS
EEF 14 WHT
EEE 14 YEL
CIGAR LIGHTER
EEF 14 WHT
EEE 14 YEL
CB PREP OPTION
12V BREAKER PANEL (LOCATED IN FRONT ELECTRICAL BOX)
DDX 12 YEL
DDY 12 YEL
DDF 10 YEL
RH 12 YEL
ER 16 YEL
KA 12 YEL
PW 14 YEL
G 12 YEL
FX 12 YEL
BBU 12 YEL
WJ 12 YEL
MF 14 YEL
IHS 16 YEL
GJ 16 YEL
MK 14 YEL
KKA 14 YEL
JJY 14 YEL
JJW 14 YEL
FFD 12 YEL
LS 16 YEL
EEE 14 YEL
DDG 6 BLK
PPM 14 YEL
CONNECTS TO COOLING FANS RELAY
30-RE 12 YEL
85-RP 14 YEL
86-RG 14 WHT
87-RH 12 YEL
87A-
DASH A/C CONTROL (BLU/RED WIRE)
RP 14 YEL
CONNECTS TO WIRE ASM-CHASSIS (LOCATED BELOW DASH POD)
5
1-RE 10 YEL
2-
CONNECTS TO HEATER A/C PRESSURE SWITCH
A-RK 12 WHT
B-RG 14 WHT
10 YEL
1-BBN 16 YEL
2-BBM 16 YEL
3-CCY 16 YEL
4-CCZ 16 YEL
5-DDA 16 YEL
6-KKK 16 YEL
7-PPS 14 YEL
8-PPT 14 YEL
9-PPW 14 YEL
10-SSC 14 YEL
11-SSD 14 YEL
12-SSE 14 YEL
13-SSF 14 YEL
14-
15-
CONNECTS TO WIRE ASM-CHASSIS (LOCATED BELOW DASH POD)
5
1-
2-SSE 14 YEL
3-SSD 14 YEL
4-SSF 14 YEL
5-
6-SSC 14 YEL
CONNECTS TO JACKS CONTROL PANEL
1-MC 16 WHT
2-ML 16 YEL
3-MK 14 YEL
4-GT 16 YEL
5-LF 14 YEL
6-LE 14 YEL
7-KKB 14 YEL
8-
9-
10-
11-
12-
CONNECTS TO WIRE ASM-IP,RIGHT (SHT 2, C-8) (LOCATED BELOW DASH POD)
1-GT 16 YEL
2-MU 14 WHT
CONNECTS TO DELUXE SOUND POWER FILTER (LOCATED BELOW DASH POD)
1-MK 14 YEL
2-MG 14 WHT
3-JJX 14 YEL
4-KKN 14 YEL
5-PX 16 YEL
6-PY 16 WHT
7-LS 16 YEL
8-MM 14 YEL
9-
CONNECTS TO KEYLESS ENTRY MODULE (LOCATED BELOW DASH POD)
4
1-RA 14 YEL
2-RC 14 WHT
CONNECTS TO LEFT MIRROR
A-NA 14 YEL
B-NH 14 YEL
C-NJ 16 YEL
D-RA 14 YEL
CONNECTS TO WIRE ASM-HEADLAMP LEFT
7
A-MM 14 YEL
B-NH 14 YEL
C-NK 14 YEL
D-RB 14 YEL
CONNECTS TO WIRE ASM-HEADLAMP RIGHT
7
1-RB 14 YEL
2-RC 14 WHT
CONNECTS TO RIGHT MIRROR
4
DWG NO 157300 S1 F4 REV
7/13/2006 22

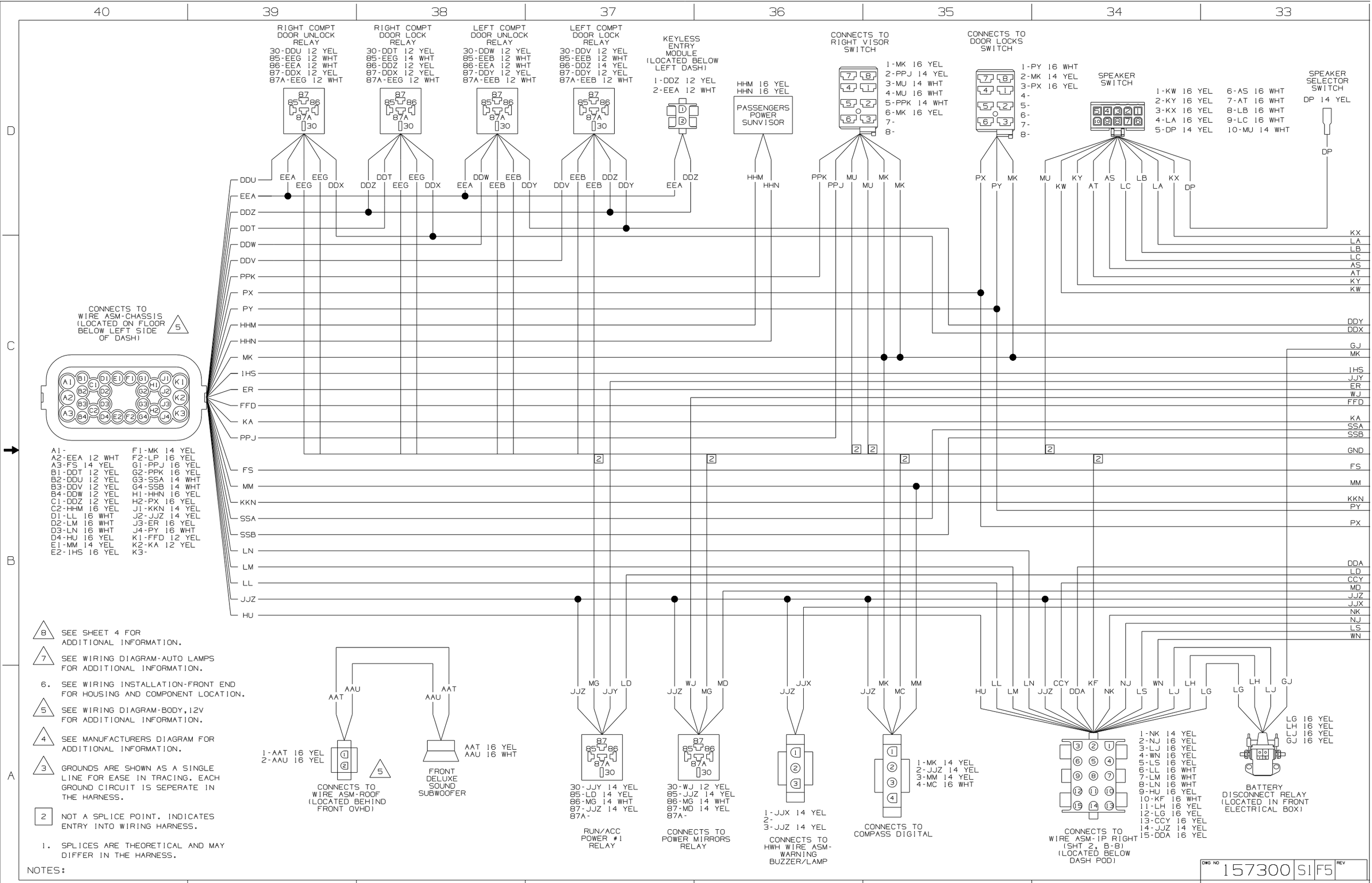
RIGHT COMPT DOOR UNLOCK RELAY
30-DDU 12 YEL
85-EEG 12 WHT
86-EEA 12 WHT
87-DDX 12 YEL
87A-EEG 12 WHT
RIGHT COMPT DOOR LOCK RELAY
30-DDT 12 YEL
85-EEG 14 WHT
86-DDZ 12 YEL
87-DDX 12 YEL
87A-EEG 12 WHT
LEFT COMPT DOOR UNLOCK RELAY
30-DDW 12 YEL
85-EEB 12 WHT
86-EEA 12 WHT
87-DDY 12 YEL
87A-EEB 12 WHT
LEFT COMPT DOOR LOCK RELAY
30-DDV 12 YEL
85-EEB 12 WHT
86-DDZ 14 YEL
87-DDY 12 YEL
87A-EEB 12 WHT
KEYLESS ENTRY MODULE (LOCATED BELOW LEFT DASH)
1-DDZ 12 YEL
2-EEA 12 WHT
HHM 16 YEL
HHN 16 YEL
PASSENGERS POWER SUNVISOR
CONNECTS TO RIGHT VISOR SWITCH
1-MK 16 YEL
2-PPJ 14 YEL
3-MU 14 WHT
4-MU 16 WHT
5-PPK 14 WHT
6-MK 16 YEL
7-
8-
CONNECTS TO DOOR LOCKS SWITCH
1-PY 16 WHT
2-MK 14 YEL
3-PX 16 YEL
4-
5-
6-
7-
8-
SPEAKER SWITCH
1-KW 16 YEL
2-KY 16 YEL
3-KX 16 YEL
4-LA 16 YEL
5-DP 14 YEL
6-AS 16 WHT
7-AT 16 WHT
8-LB 16 WHT
9-LC 16 WHT
10-MU 14 WHT
SPEAKER SELECTOR SWITCH
DP 14 YEL
CONNECTS TO WIRE ASM-CHASSIS (LOCATED ON FLOOR BELOW LEFT SIDE OF DASH)
A1-
A2-EEA 12 WHT
A3-FS 14 YEL
B1-DDT 12 YEL
B2-DDU 12 YEL
B3-DDV 12 YEL
B4-DDW 12 YEL
C1-DDZ 12 YEL
C2-HHM 16 YEL
D1-LL 16 WHT
D2-LM 16 WHT
D3-LN 16 WHT
D4-HU 16 YEL
E1-MM 14 YEL
E2-IHS 16 YEL
F1-MK 14 YEL
F2-LP 16 YEL
G1-PPJ 16 YEL
G2-PPK 16 YEL
G3-SSA 14 WHT
G4-SSB 14 WHT
H1-HHN 16 YEL
H2-PX 16 YEL
J1-KKN 14 YEL
J2-JJZ 14 YEL
J3-ER 16 YEL
J4-PY 16 WHT
K1-FFD 12 YEL
K2-KA 12 YEL
K3-
8 SEE SHEET 4 FOR ADDITIONAL INFORMATION.
7 SEE WIRING DIAGRAM-AUTO LAMPS FOR ADDITIONAL INFORMATION.
6. SEE WIRING INSTALLATION-FRONT END FOR HOUSING AND COMPONENT LOCATION.
5 SEE WIRING DIAGRAM-BODY,12V FOR ADDITIONAL INFORMATION.
4 SEE MANUFACTURERS DIAGRAM FOR ADDITIONAL INFORMATION.
3 GROUNDS ARE SHOWN AS A SINGLE LINE FOR EASE IN TRACING. EACH GROUND CIRCUIT IS SEPERATE IN THE HARNESS.
2 NOT A SPLICE POINT. INDICATES ENTRY INTO WIRING HARNESS.
1. SPLICES ARE THEORETICAL AND MAY DIFFER IN THE HARNESS.
NOTES:
1-AAT 16 YEL
2-AAU 16 YEL
CONNECTS TO WIRE ASM-ROOF (LOCATED BEHIND FRONT OVHD)
FRONT DELUXE SOUND SUBWOOFER
AAT 16 YEL
AAU 16 WHT
30-JJY 14 YEL
85-LD 14 YEL
86-MG 14 WHT
87-JJZ 14 YEL
87A-
RUN/ACC POWER #1 RELAY
30-WJ 12 YEL
85-JJZ 14 YEL
86-MG 14 WHT
87-MD 14 YEL
87A-
CONNECTS TO POWER MIRRORS RELAY
1-JJX 14 YEL
2-
3-JJZ 14 YEL
CONNECTS TO HWH WIRE ASM-WARNING BUZZER/LAMP
1-MK 14 YEL
2-JJZ 14 YEL
3-MM 14 YEL
4-MC 16 WHT
CONNECTS TO COMPASS DIGITAL
1-NK 14 YEL
2-NJ 16 YEL
3-LJ 16 YEL
4-WN 16 YEL
5-LS 16 YEL
6-LL 16 WHT
7-LM 16 WHT
8-LN 16 WHT
9-HU 16 YEL
10-KF 16 WHT
11-LH 16 YEL
12-LG 16 YEL
13-CCY 16 YEL
14-JJZ 14 YEL
15-DDA 16 YEL
CONNECTS TO WIRE ASM-IP RIGHT (SHT 2, B-8) (LOCATED BELOW DASH POD)
LG 16 YEL
LH 16 YEL
LJ 16 YEL
GJ 16 YEL
BATTERY DISCONNECT RELAY (LOCATED IN FRONT ELECTRICAL BOX)
DWG NO 157300 S1 F5 REV

DWG NO 157300

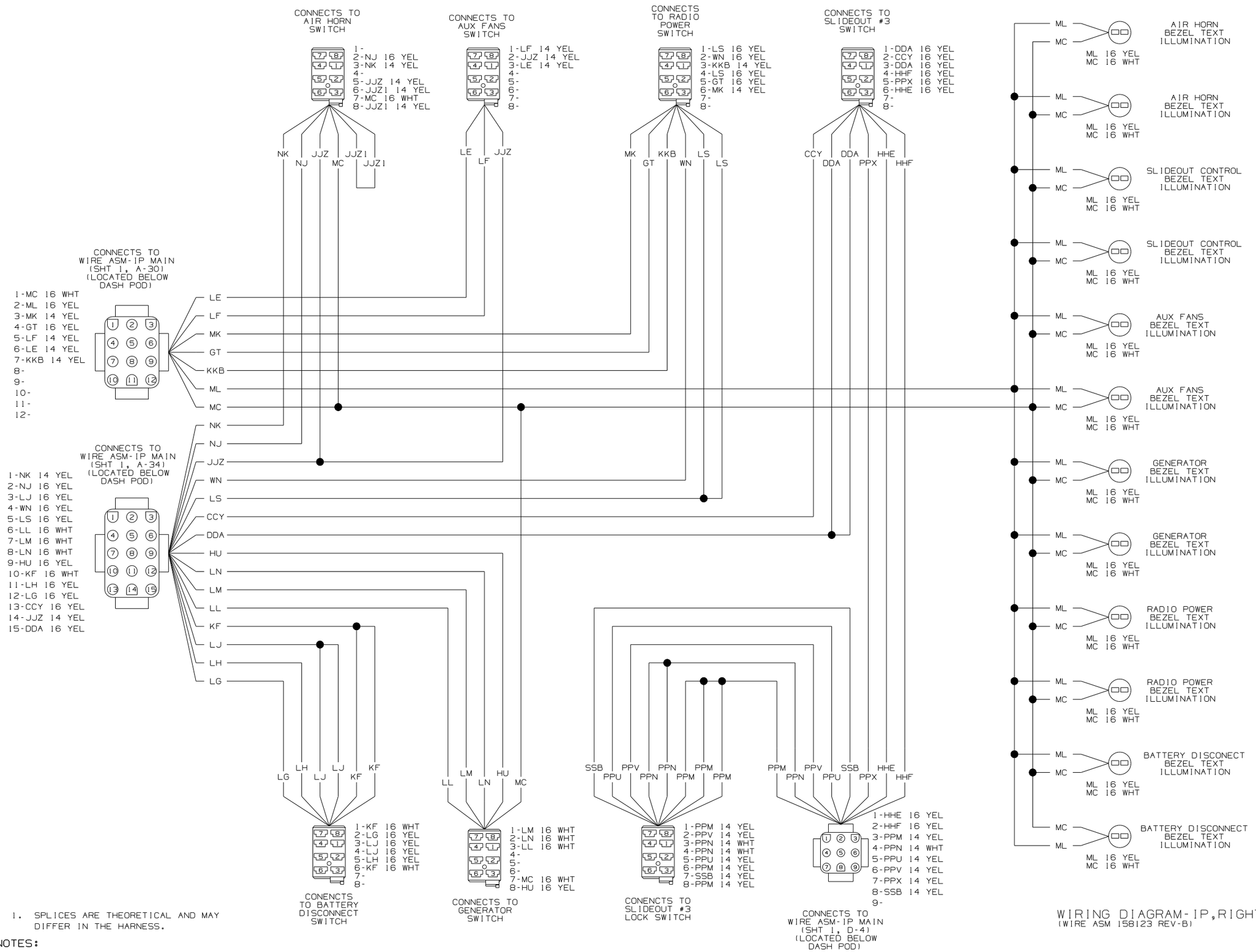

1. SPLICES ARE THEORETICAL AND MAY DIFFER IN THE HARNESS.

NOTES:

WIRING DIAGRAM-IP,RIGHT
(WIRE ASM 158123 REV-B)

FIRST USED	07 P-SERIES
	DO NOT SCALE DRAWING
TITLE:	WIRING DIAGRAM-AUTO
SHEET 2	PART NO 157300 REV

DWG NO 157300

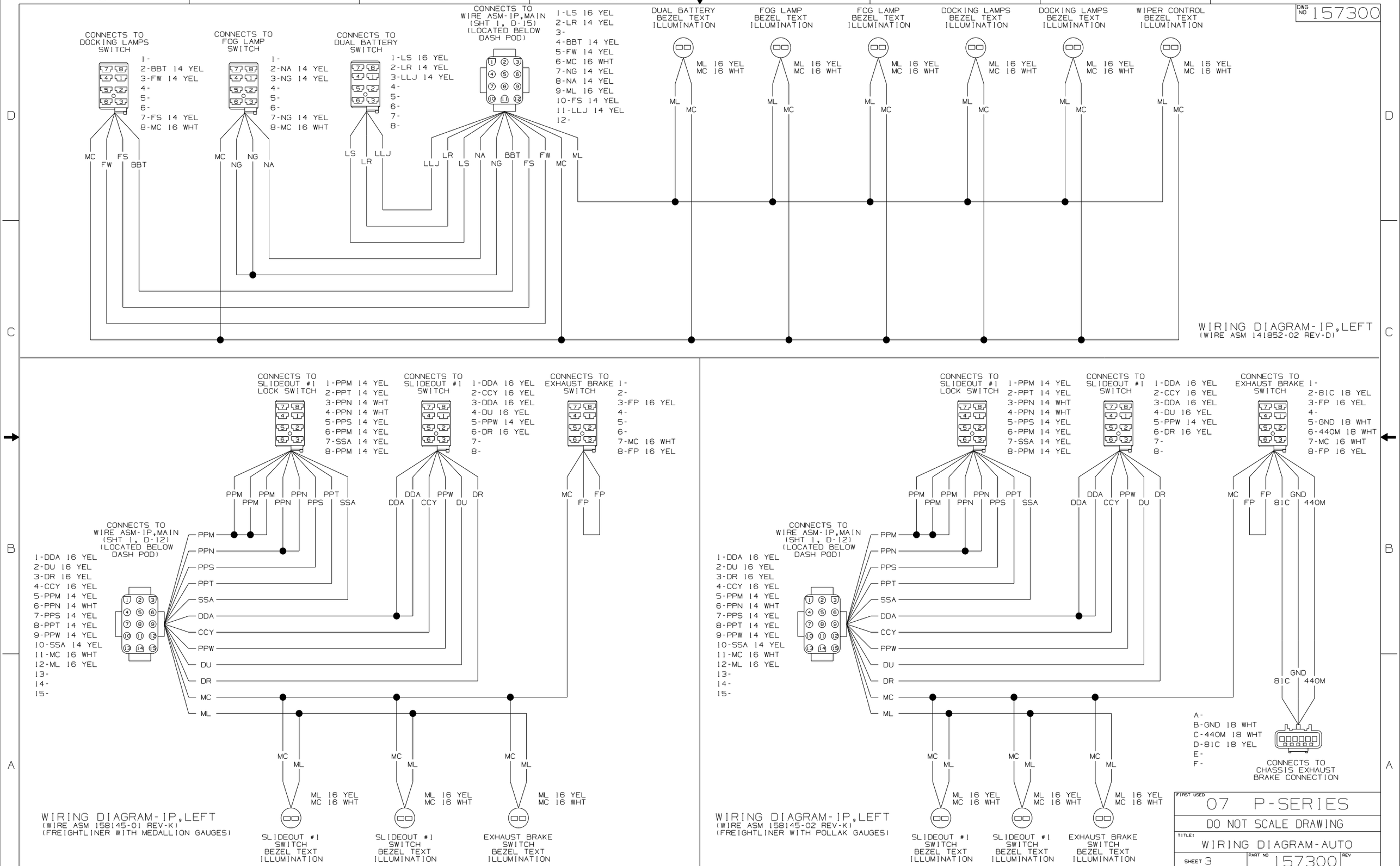

DWG NO 157300

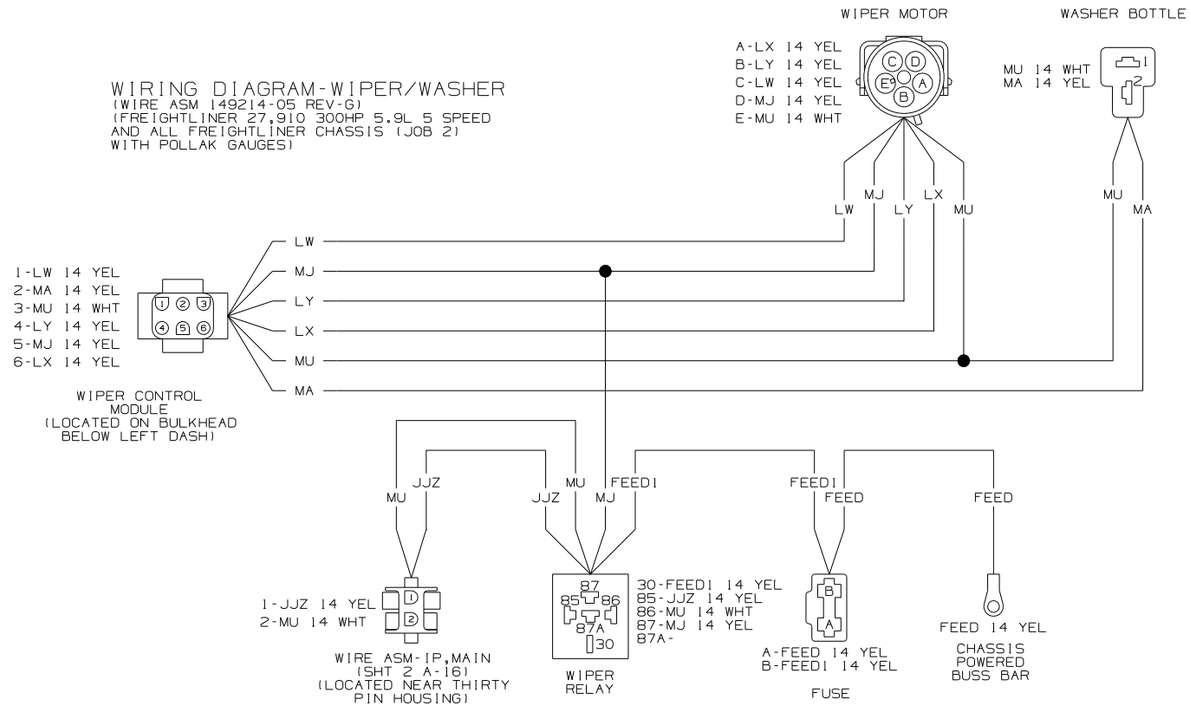

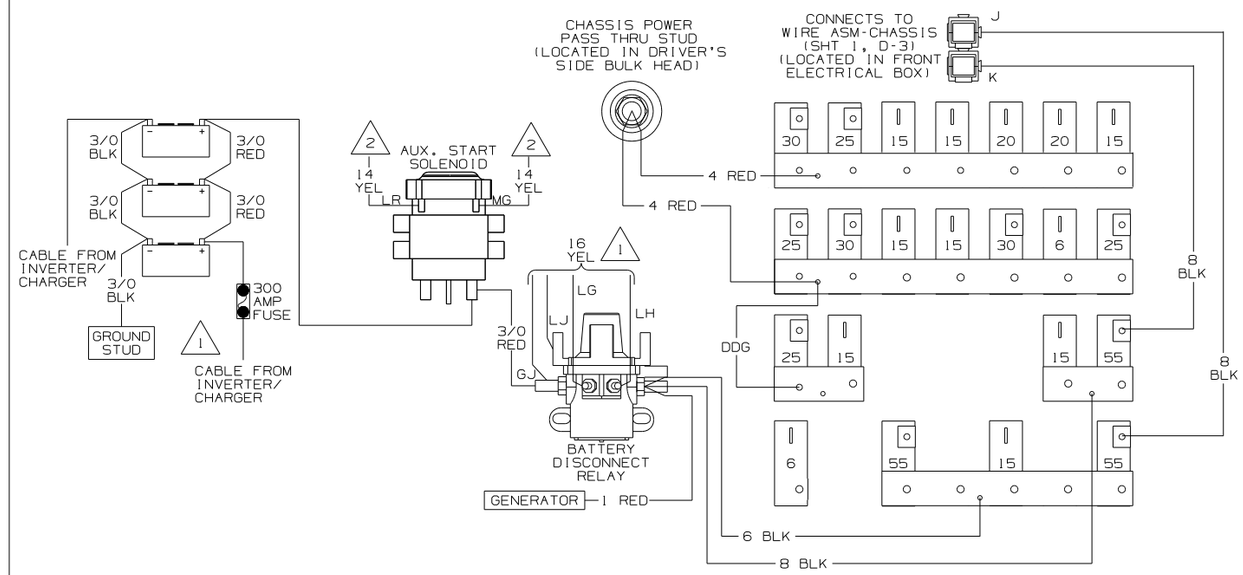

WIRING DIAGRAM-CRT BKR POWER
(WIRE ASM CRT BRK,POWER 103991-01 REV-G)
WIRE ASM COACH BKR FEED 103752-06-000 REV E)

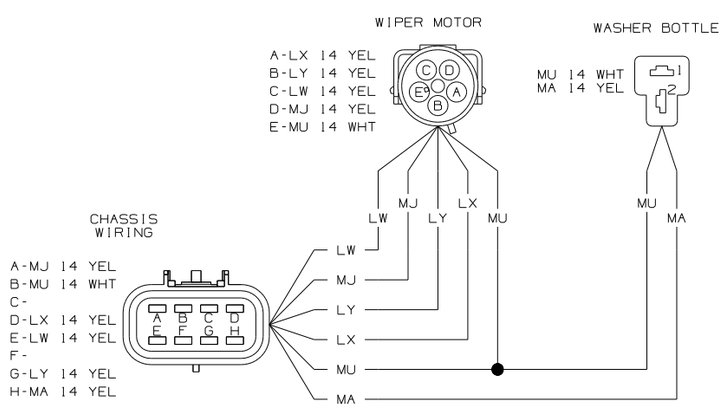

WIRING DIAGRAM-WIPER/WASHER
(WIRE ASM 145778-02 REV-E)
(FREIGHTLINER 29,410 350 7.2L 6 SPEED OR
FREIGHTLINER 27,910 350 7.2L 6 SPEED WITH
MEDALLION GAUGES)

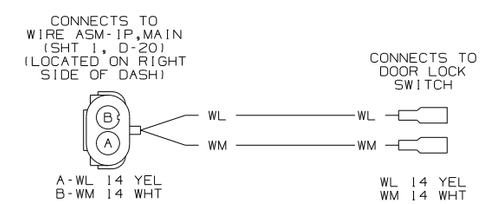

WIRING DIAGRAM-DOOR LOCK
(WIRE ASM 132267 REV-C)

2 SEE SHEET 1 FOR ADDITIONAL INFORMATION

1 SEE WIRING DIAGRAM-BODY,12V FOR ADDITIONAL INFORMATION

NOTES:

FIRST USED	07 P-SERIES
	DO NOT SCALE DRAWING
TITLE:	WIRING DIAGRAM-AUTO
SHEET 4	PART NO 157300 REV

RELEASE	REV A	DATE	DWG NO 156346

REV	ZONE	REVISION RECORD	DATE	DFTR-ORIG

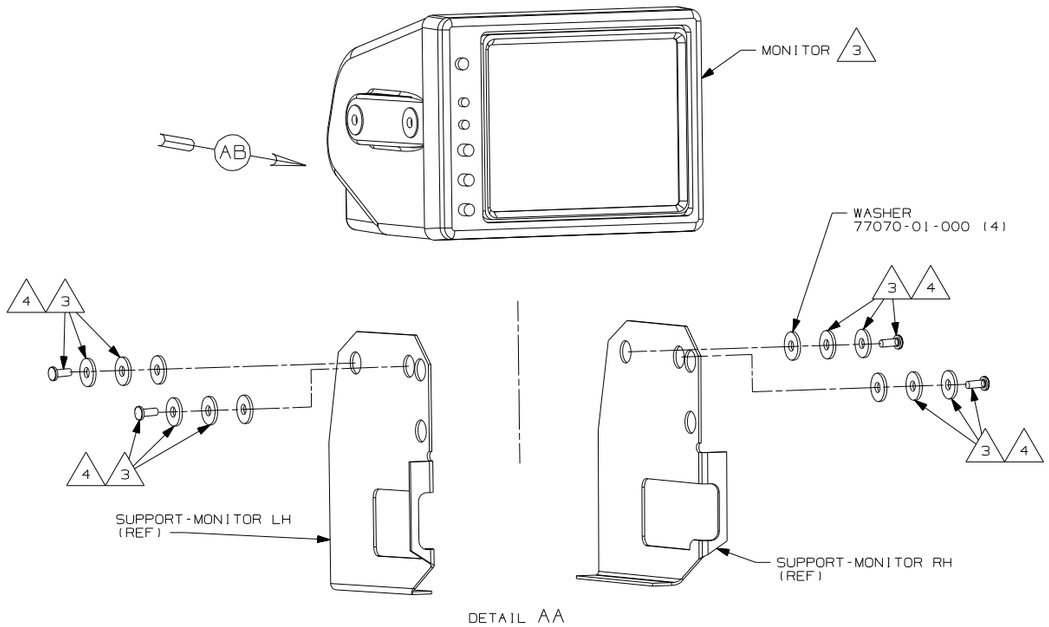

DETAIL AA

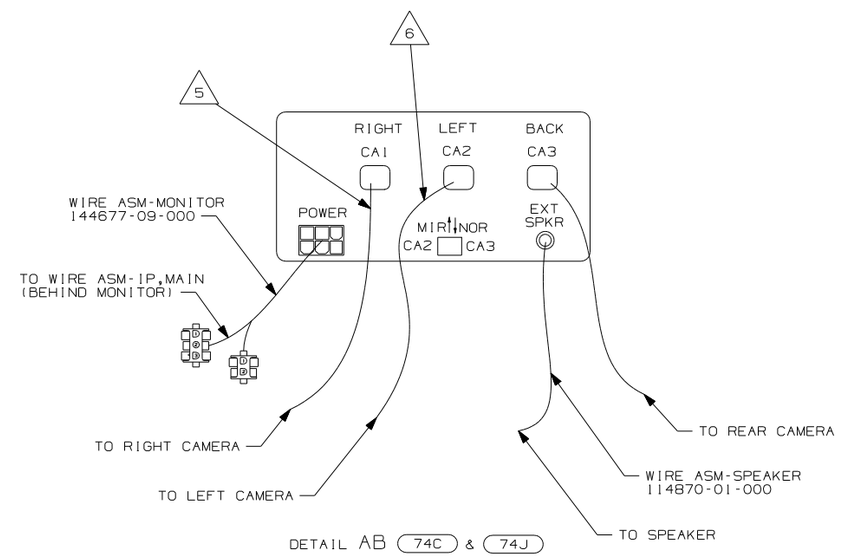

DETAIL AB (74C) & (74J)

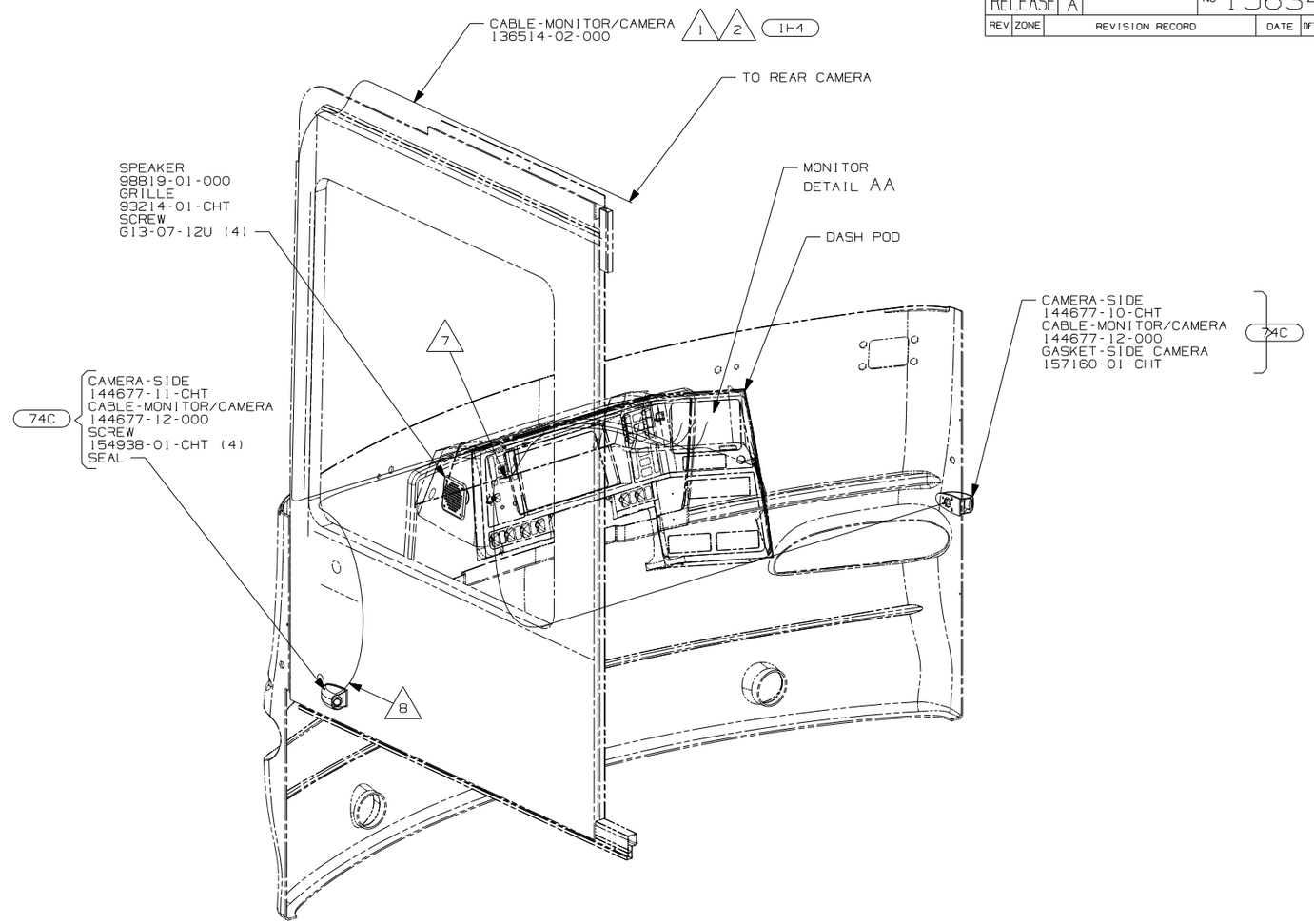

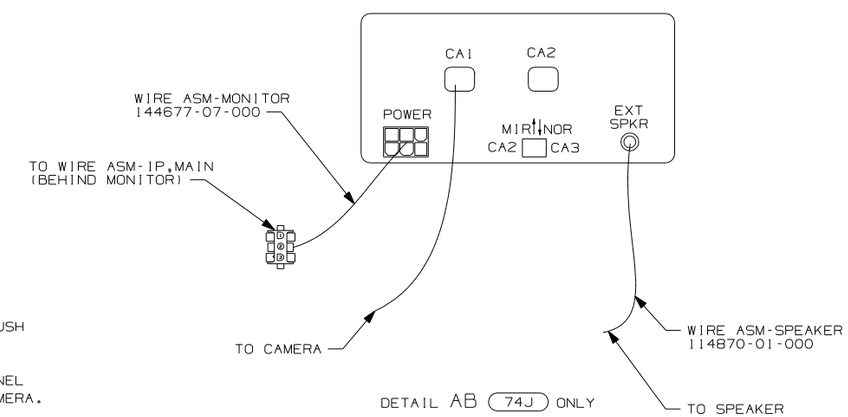

DETAIL AB (74J) ONLY

(74J) REARVIEW MONITOR SYS W/AUDIO
(74C) VIDEO CAMERA SYSTEM
(1H4) REARVIEW MONITOR-WIRE PREP
(1A5) REARVIEW MONITOR SYSTEM W/O

4 PARTS SUPPLIED WITH MONITOR P/N 144677-08-000 (74J) & (74C)

3 PARTS SUPPLIED WITH MONITOR P/N 144677-06-000 (74J) ONLY.

2 (1A5) OR (1H4) END STANDARD CABLE BEHIND REAR CAP (SHT 2) ON UNITS WITHOUT MONITOR & COIL UNDER DASH POD BEHIND MONITOR POCKET.

1 RUN CABLE THRU LEFT HAND COVE TO FRONT OF UNIT AND DOWN LEFT A-PILLAR TO MONITOR

8 CONNECT CAMERA THRU HOLE IN SIDEWALL, PUSH CONNECTOR BACK THRU SIDEWALL AND SEAL.

7 ROUTE CABLE TO EXTERIOR THRU HOLE IN PANEL ALONG WITH WIRE ASM-IP,MAIN TO RIGHT CAMERA.

6 MARK LEFT CABLE WITH YELLOW TAPE 900000-07-000 NEXT TO CONNECTOR.

5 MARK RIGHT CABLE WITH WHITE TAPE 900000-08-000 NEXT TO CONNECTOR.

NOTES:

DFTR	ORIG. DATE
CHKR	ALL DIMENSIONS ARE IN MILLIMETERS
P.E.	
M.E.	FIRST USED
DSNR	07 P-SERIES

UNSPECIFIED TOLERANCES ARE:
WHOLE DIM (X) :
ONE-PLACE (X.X) :
TWO-PLACE (X.XX) :
ANGLE :
THIRD ANGLE PROJECTION

MATERIAL:

DO NOT SCALE DRAWING

TITLE: MONITOR INSTL

SHEET 1 OF 2 | PART NO 156346 | REV

DWG NO 156346

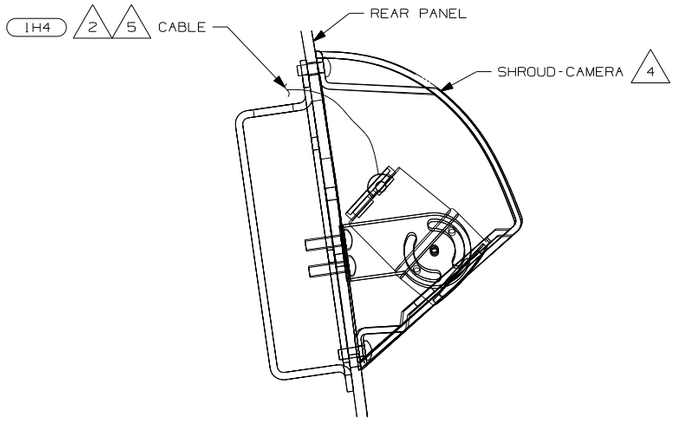

SECTION BA-BA

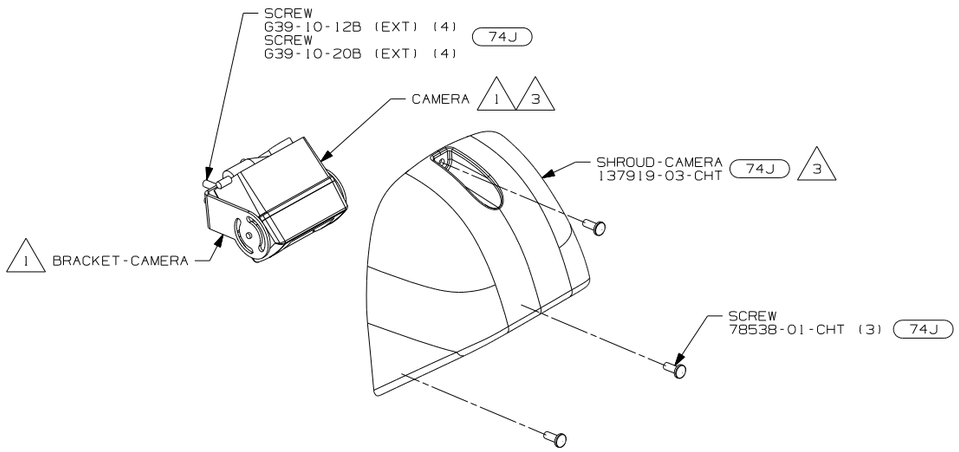

DETAIL BB

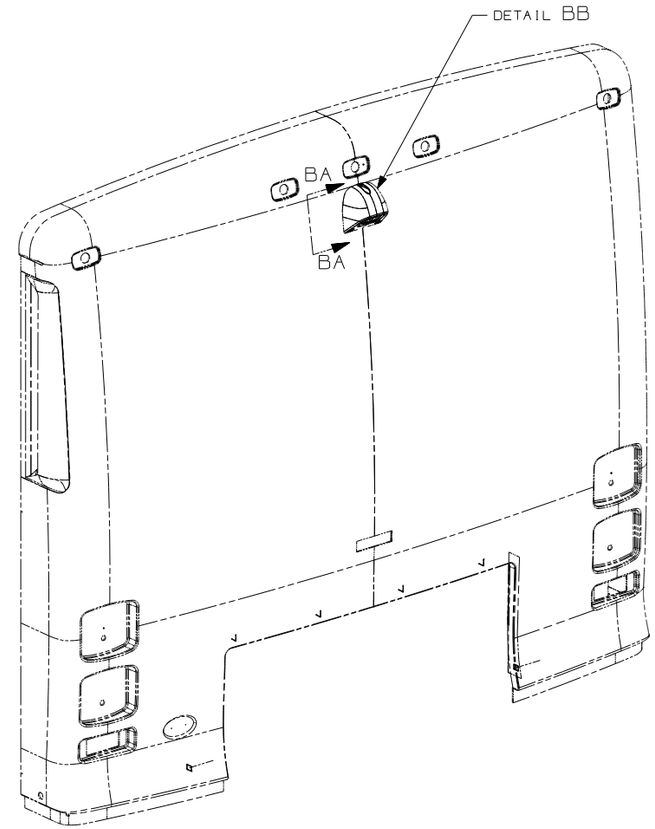

NOTES:

5. 1A5 OR 1H4 END STANDARD CABLE IN THIS AREA ON UNITS WITHOUT MONITOR.
4. SEE PANEL-REAR CAP FOR LOCATION.
3. ALIGN CAMERA IN CENTER OF SHROUD OPENING
2. RUN CABLE THRU LEFT HAND COVE TO FRONT OF UNIT AND DOWN LEFT A-PILLAR TO MONITOR
1. PARTS SUPPLIED WITH REAR CAMERA 144677-04-000. 74J

74J REAR VIEW MONITOR SYSTEM
1H4 REAR VIEW MONITOR-WIRE PREP
1A5 REARVIEW MONITOR SYSTEM W/O

FIRST USED	07 P-SERIES
	DO NOT SCALE DRAWING
TITLE:	MONITOR INSTL
SHEET 2	PART NO 156346 REV

RELEASE	REV A	DATE	DWG NO 159642

REV	ZONE	REVISION RECORD	DATE	DFTR-ORIG

R-SERIES

	R36LD	R40FD	R40KD	R40TD	
CABLE ASM (YEL) FROM BATTERY TO COACH SIDE OF AUX START SOLENOID	141417-52-030	141417-52-030	141417-52-030	141417-52-023	
CABLE ASM (ORG) FROM COACH BATTERY TO INVERTER FUSE	141416-02-009	141416-02-009	141416-02-009	141416-02-009	
CABLE ASM (ORG) FROM INVERTER FUSE TO INVERTER	141416-61-030	141416-61-030	141416-61-030	141416-61-062	
CABLE ASM (BLK) FROM BATTERY TO INVERTER	133567-14-030	133567-14-030	133567-14-030	133567-14-062	
CABLE ASM (BLK) FROM COACH BATTERY TO FRAME RAIL GND	133568-11-016	133568-11-016	133568-11-016	133568-11-016	
CABLE ASM (BLK) FROM CHASSIS BATTERY TO FRAME RAIL GND	133568-11-013	133568-11-013	133568-11-013	133568-11-013	
CABLE ASM (PUR) FROM BATTERY TO CHASSIS SIDE OF AUX START SOLENOID	141417-12-025	141417-12-025	141417-12-025	141417-12-025	
CABLE ASM (BLU) FROM AUX START SOLENOID TO LEVELING SYSTEM POWER	141415-22-103	141415-22-113	141415-22-113	141415-22-113	1
CABLE ASM (GRN) FROM BAT DISC RELAY TO PASS THRU STUD	141416-42-110	141416-42-120	141416-42-120	141416-42-120	2
CABLE ASM (GRN) FROM PASS THRU STUD TO GENERATOR	141416-42-021	141416-42-021	141416-42-021	141416-42-021	3
CABLE ASM (BLK) FROM GENERATOR TO FRAME RAIL GROUND	133566-12-020	133566-12-020	133566-12-020	133566-12-020	2
CABLE ASM (RED) JUMPER BETWEEN POSITIVE POSTS ON COACH BATTERY	133568-01-003 (2)	133568-01-003 (2)	133568-01-003 (2)	133568-01-003 (2)	
CABLE ASM (BLK) JUMPER BETWEEN NEGATIVE POSTS ON COACH BATTERY	133568-11-003 (2)	133568-11-003 (2)	133568-11-003 (2)	133568-11-003 (2)	
CABLE ASM (RED) JUMPER BETWEEN POSITIVE POSTS IN LEFT FRONT COMPT	133568-01-002	133568-01-002	133568-01-002	133568-01-002	3
CABLE ASM-TEMPERATURE,BATTERY	148254-04-000	148254-04-000	148254-04-000	148254-06-000	

S-SERIES

	S40FD	S40KD	S40TD	
CABLE ASM (YEL) FROM BATTERY TO COACH SIDE OF AUX START SOLENOID	141417-52-030	141417-52-030	141417-52-023	
CABLE ASM (ORG) FROM COACH BATTERY TO INVERTER FUSE	141416-02-009	141416-02-009	141416-02-009	
CABLE ASM (ORG) FROM INVERTER FUSE TO INVERTER	141416-61-030	141416-61-030	141416-61-062	
CABLE ASM (BLK) FROM BATTERY TO INVERTER	133567-14-030	133567-14-030	133567-14-062	
CABLE ASM (BLK) FROM COACH BATTERY TO FRAME RAIL GND	133568-11-016	133568-11-016	133568-11-016	
CABLE ASM (BLK) FROM CHASSIS BATTERY TO FRAME RAIL GND	133568-11-013	133568-11-013	133568-11-013	
CABLE ASM (PUR) FROM BATTERY TO CHASSIS SIDE OF AUX START SOLENOID	141417-12-025	141417-12-025	141417-12-025	
CABLE ASM (BLU) FROM AUX START SOLENOID TO LEVELING SYSTEM POWER	141415-22-113	141415-22-113	141415-22-113	1
CABLE ASM (GRN) FROM BAT DISC RELAY TO PASS THRU STUD	141416-42-120	141416-42-120	141416-42-120	2
CABLE ASM (GRN) FROM PASS THRU STUD TO GENERATOR	141416-42-025	141416-42-025	141416-42-025	3
CABLE ASM (BLK) FROM GENERATOR TO FRAME RAIL GROUND	133566-12-012	133566-12-012	133566-12-012	2
CABLE ASM (RED) JUMPER BETWEEN POSITIVE POSTS ON COACH BATTERY	133568-01-003 (2)	133568-01-003 (2)	133568-01-003 (2)	
CABLE ASM (BLK) JUMPER BETWEEN NEGATIVE POSTS ON COACH BATTERY	133568-11-003 (2)	133568-11-003 (2)	133568-11-003 (2)	
CABLE ASM (RED) JUMPER BETWEEN POSITIVE POSTS IN LEFT FRONT COMPT	133568-01-002	133568-01-002	133568-01-002	3
CABLE ASM-TEMPERATURE,BATTERY	148254-04-000	148254-04-000	148254-06-000	

P-SERIES (40D)

	P34H	P36G	P39K	
CABLE ASM (YEL) FROM BATTERY TO COACH SIDE OF AUX START SOLENOID	141417-52-106	141417-52-106	141417-52-115	
CABLE ASM (ORG) FROM COACH BATTERY TO INVERTER FUSE	156203-01-009	156203-01-009	156203-01-009	
CABLE ASM (RED) FROM INVERTER FUSE TO INVERTER	136145-03-030	136145-03-030	136145-03-030	
CABLE ASM (GRN) FROM BATTERY TO INVERTER	136145-04-030	136145-04-030	136145-04-030	
CABLE ASM (BLK) FROM COACH BATTERY TO FRAME RAIL GND	133568-11-016	133568-11-016	133568-11-016	
CABLE ASM (BLK) FROM CHASSIS BATTERY TO FRAME RAIL GND	133568-11-013	133568-11-013	133568-11-013	
CABLE ASM (PUR) FROM BATTERY TO CHASSIS SIDE OF AUX START SOLENOID	141417-12-106	141417-12-106	141417-12-115	
CABLE ASM (BLU) FROM AUX START SOLENOID TO LEVELING SYSTEM POWER	141415-22-018	141415-22-018	141415-22-018	1
CABLE ASM (GRN) FROM BAT DISC RELAY TO GENERATOR	141415-42-018	141415-42-018	141415-42-018	3
CABLE ASM (BLK) FROM GENERATOR TO FRAME RAIL GROUND	133566-12-020	133566-12-020	133566-12-020	2
CABLE ASM (RED) JUMPER BETWEEN POSITIVE POSTS ON COACH BATTERY	133568-01-003	133568-01-003	133568-01-003	
CABLE ASM (BLK) JUMPER BETWEEN NEGATIVE POSTS ON COACH BATTERY	133568-11-003	133568-11-003	133568-11-003	

P-SERIES (13X)

	P34H	P36G	P39K	
CABLE ASM (YEL) FROM BATTERY TO COACH SIDE OF AUX START SOLENOID	141417-52-106	141417-52-106	141417-52-115	
CABLE ASM (ORG) FROM COACH BATTERY TO INVERTER FUSE	141416-02-009	141416-02-009	141416-02-009	
CABLE ASM (ORG) FROM INVERTER FUSE TO INVERTER	141416-61-030	141416-61-030	141416-61-030	
CABLE ASM (BLK) FROM BATTERY TO INVERTER	133567-14-030	133567-14-030	133567-14-030	
CABLE ASM (BLK) FROM COACH BATTERY TO FRAME RAIL GND	133568-11-016	133568-11-016	133568-11-016	
CABLE ASM (BLK) FROM CHASSIS BATTERY TO FRAME RAIL GND	133568-11-013	133568-11-013	133568-11-013	
CABLE ASM (PUR) FROM BATTERY TO CHASSIS SIDE OF AUX START SOLENOID	141417-12-106	141417-12-106	141417-12-115	
CABLE ASM (BLU) FROM AUX START SOLENOID TO LEVELING SYSTEM POWER	141415-22-018	141415-22-018	141415-22-018	1
CABLE ASM (GRN) FROM BAT DISC RELAY TO GENERATOR	141415-42-018	141415-42-018	141415-42-018	3
CABLE ASM (BLK) FROM GENERATOR TO FRAME RAIL GROUND	133566-12-020	133566-12-020	133566-12-020	2
CABLE ASM (RED) JUMPER BETWEEN POSITIVE POSTS ON COACH BATTERY	133568-01-003 (2)	133568-01-003 (2)	133568-01-003 (2)	
CABLE ASM (BLK) JUMPER BETWEEN NEGATIVE POSTS ON COACH BATTERY	133568-11-003 (2)	133568-11-003 (2)	133568-11-003 (2)	
CABLE ASM-TEMPERATURE,BATTERY	148254-04-000	148254-04-000	148254-04-000	

(40D) INVERTER-DC/AC,600 WATT
(13X) INVERTER/CHARGER 2.0 KW
(265) CODES/STANDARDS-CSA/CMVSS
(1B1) CODES/STANDARDS USA

(1B1) (265)

3 SEE WIRING INSTL-FRONT END FOR ADDITIONAL INFORMATION.
2 SEE WIRING INSTL-CHASSIS FOR ADDITIONAL INFORMATION.
1 SEE LEVELING SYSTEM INSTL FOR ADDITIONAL INFORMATION.

NOTES:

FOR ELECTRICAL TORQUE SPECIFICATIONS SEE DWG NO. 128783-01-000

X-X FOR ELECTRICAL CALLOUTS SEE DWG NO. 121339-01-000

WINNEBAGO INDUSTRIES

DFTR | ORIG. DATE
CHKR | ALL DIMENSIONS ARE IN MILLIMETERS
P.E.
M.E. | FIRST USED 07 P,R,S-SERIES
DSNR

UNSPECIFIED TOLERANCES ARE:
WHOLE DIM (X) : 3
ONE-PLACE (X.X) : 1.5
TWO-PLACE (X.XX) : 0.50
ANGLE : 1°

MATERIAL:

THIRD ANGLE PROJECTION

DO NOT SCALE DRAWING

TITLE: BATTERY INSTL

SHEET 1 OF 5 | PART NO 159642 | REV

DWG NO 159642

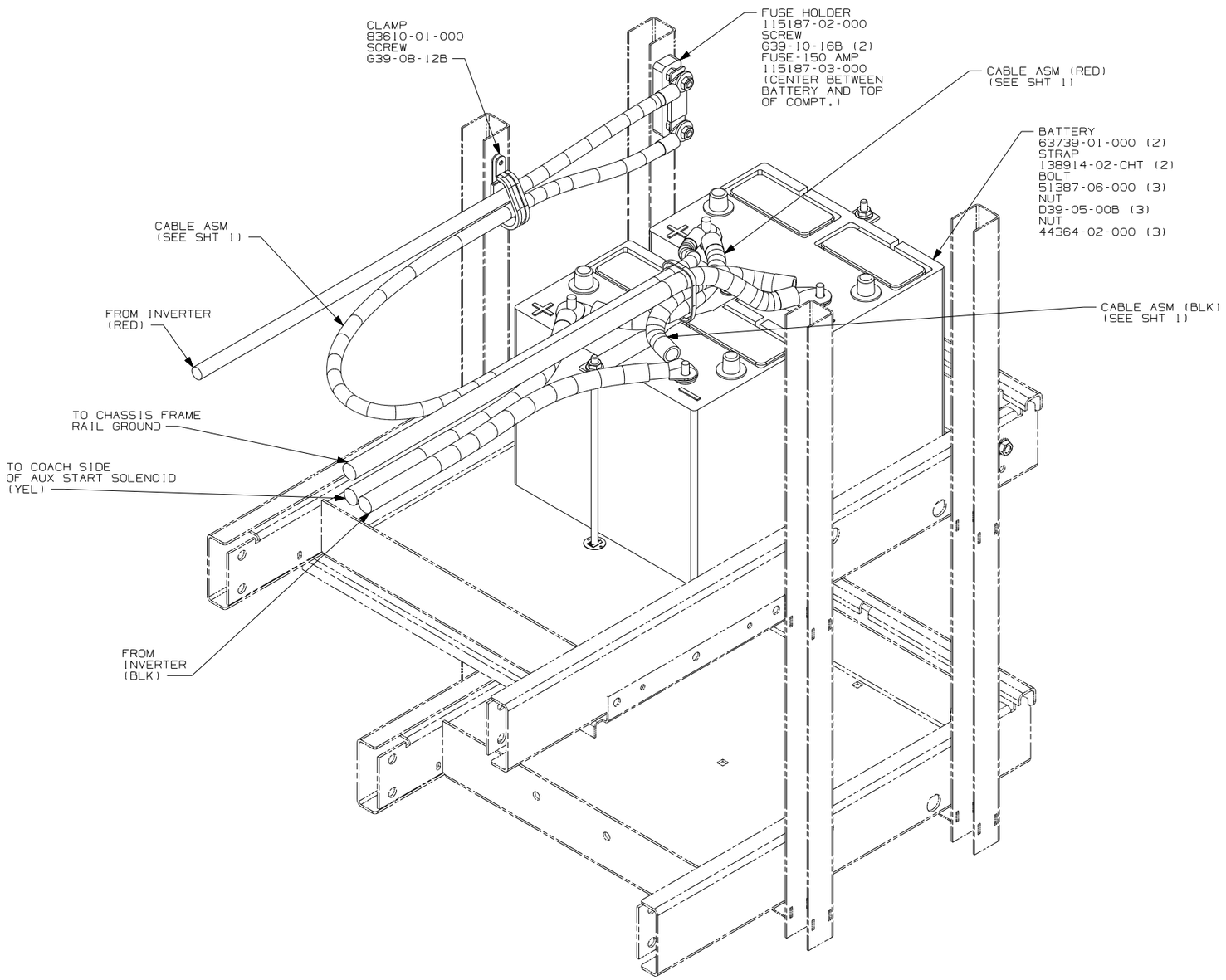

COACH BATTERIES

40D INVERTER-DC/AC,600 WATT

265 CODES/STANDARDS-CSA/CMVSS

1B1 CODES/STANDARDS USA

1B1 265 40D

FOR ELECTRICAL TORQUE SPECIFICATIONS SEE DWG NO. 128783-01-000

X-X FOR ELECTRICAL CALLOUTS SEE DWG NO. 121339-01-000

FIRST USED 07 P, R, S-SERIES

DO NOT SCALE DRAWING

TITLE: BATTERY INSTL

SHEET 2 PART NO 159642 REV

DWG NO 159642

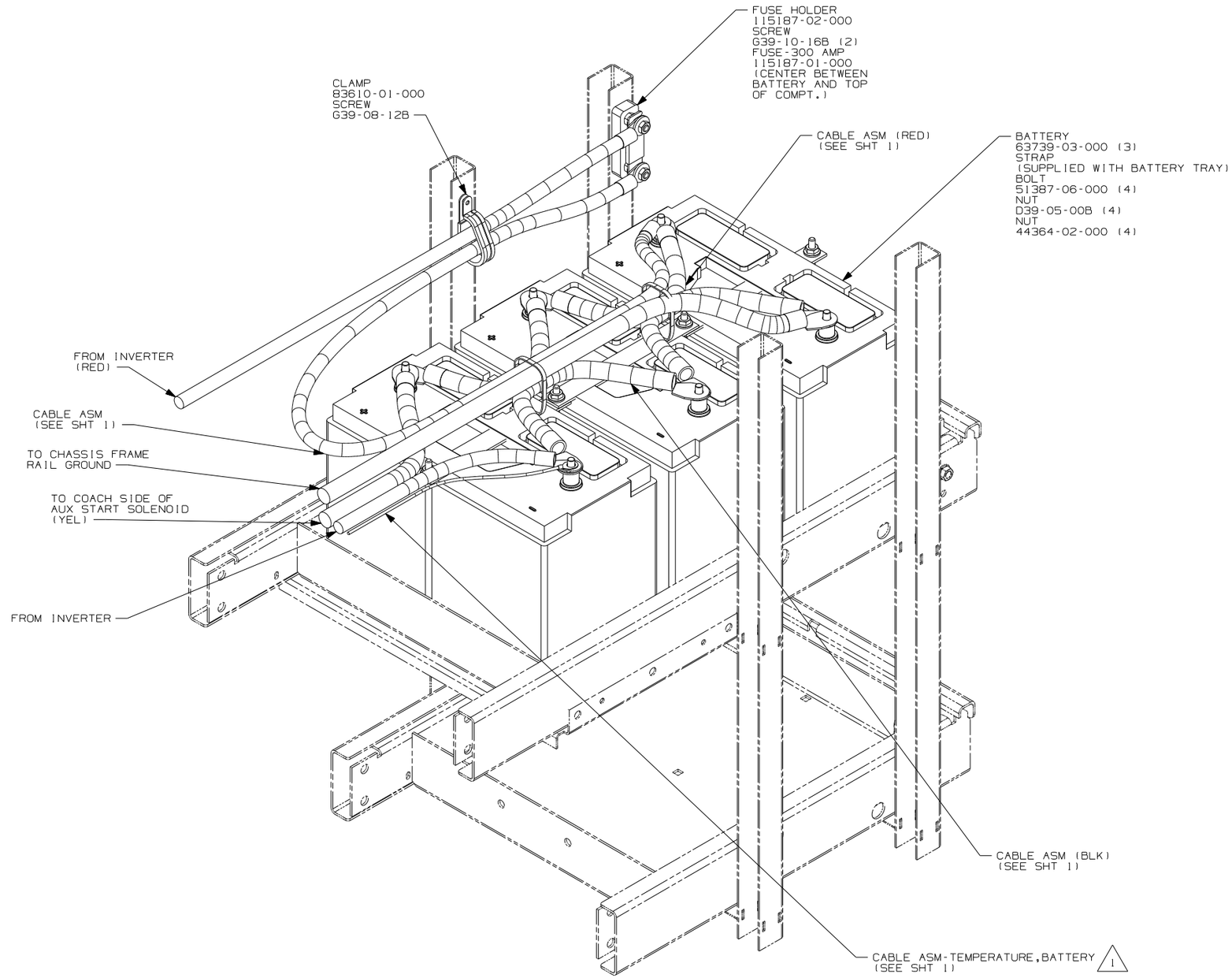

COACH BATTERIES

13X INVERTER/CHARGER 2.0 KW

265 CODES/STANDARDS-CSA/CMVSS

1B1 CODES/STANDARDS USA

1B1 265 13X

1 CONNECT RING TERMINAL OF CABLE ASM-TEMP,BATTERY TO NEGATIVE POST AS SHOWN AND ROUTE CABLE WITH NEGATIVE BATTERY CABLE TO INVERTER.

NOTES:

FOR ELECTRICAL TORQUE SPECIFICATIONS SEE DWG NO. 128783-01-000

X-X FOR ELECTRICAL CALLOUTS SEE DWG NO. 121339-01-000

FIRST USED 07 P, R, S-SERIES

DO NOT SCALE DRAWING

TITLE: BATTERY INSTL

SHEET 3 PART NO 159642 REV

DWG NO 159642

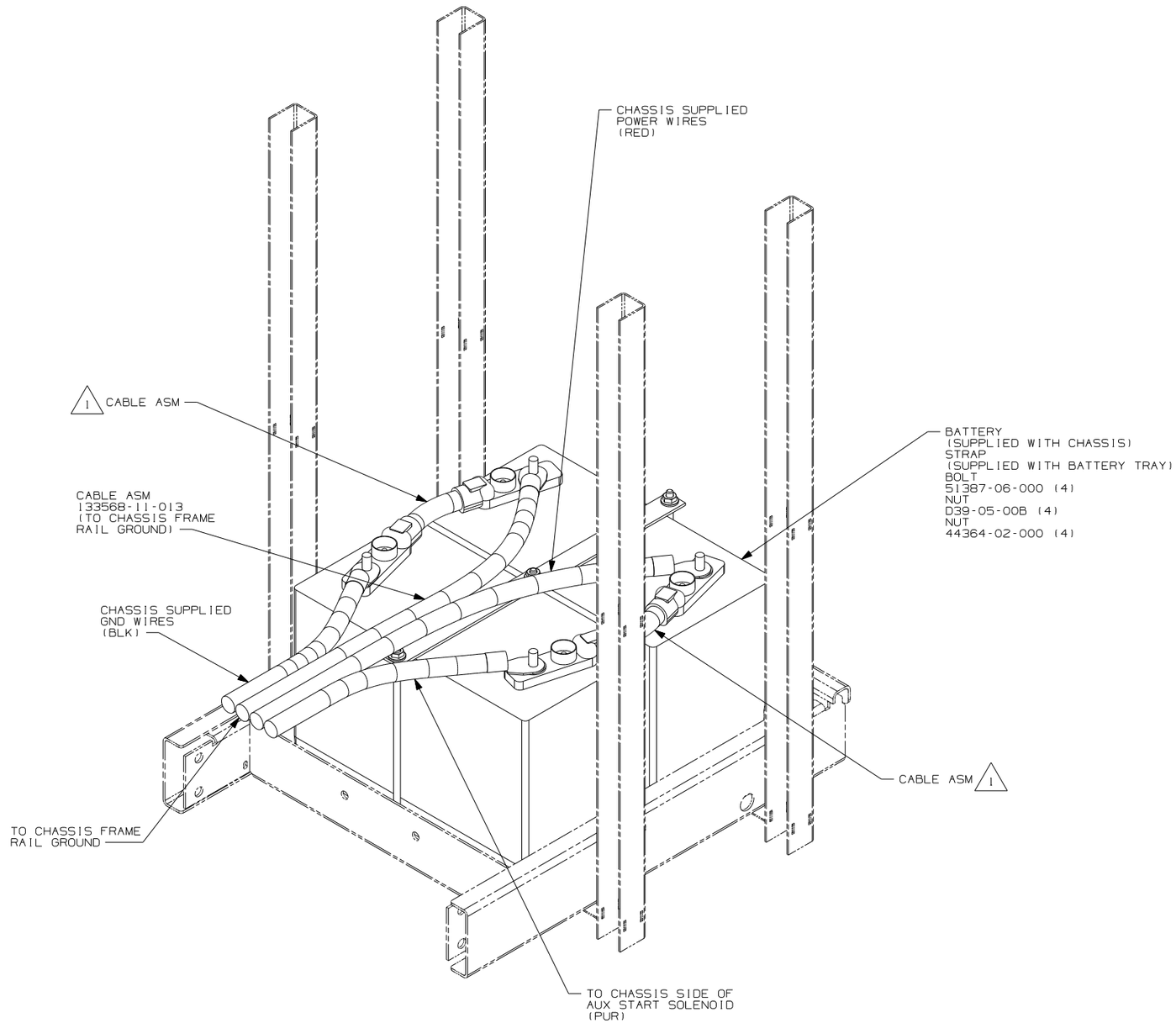

CHASSIS BATTERIES

265 CODES/STANDARDS-CSA/CMVSS

1B1 CODES/STANDARDS USA

1B1 265

FIRST USED 07 P, R, S-SERIES

DO NOT SCALE DRAWING

TITLE: BATTERY INSTL

SHEET 4 | PART NO 159642 | REV

FOR ELECTRICAL TORQUE SPECIFICATIONS SEE DWG NO. 128783-01-000

X-X FOR ELECTRICAL CALLOUTS SEE DWG NO. 121339-01-000

NOTES:

1 SUPPLIED WITH CHASSIS.

DWG NO 159642

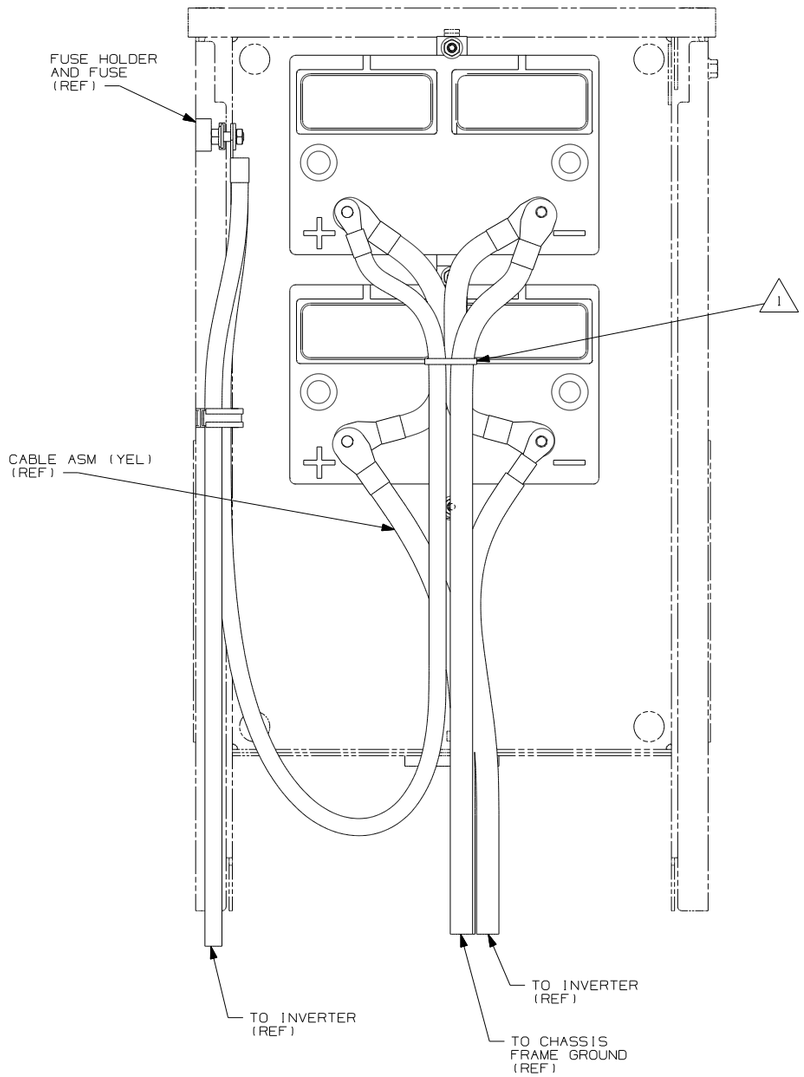

COACH BATTERIES 40D
(TOP VIEW)

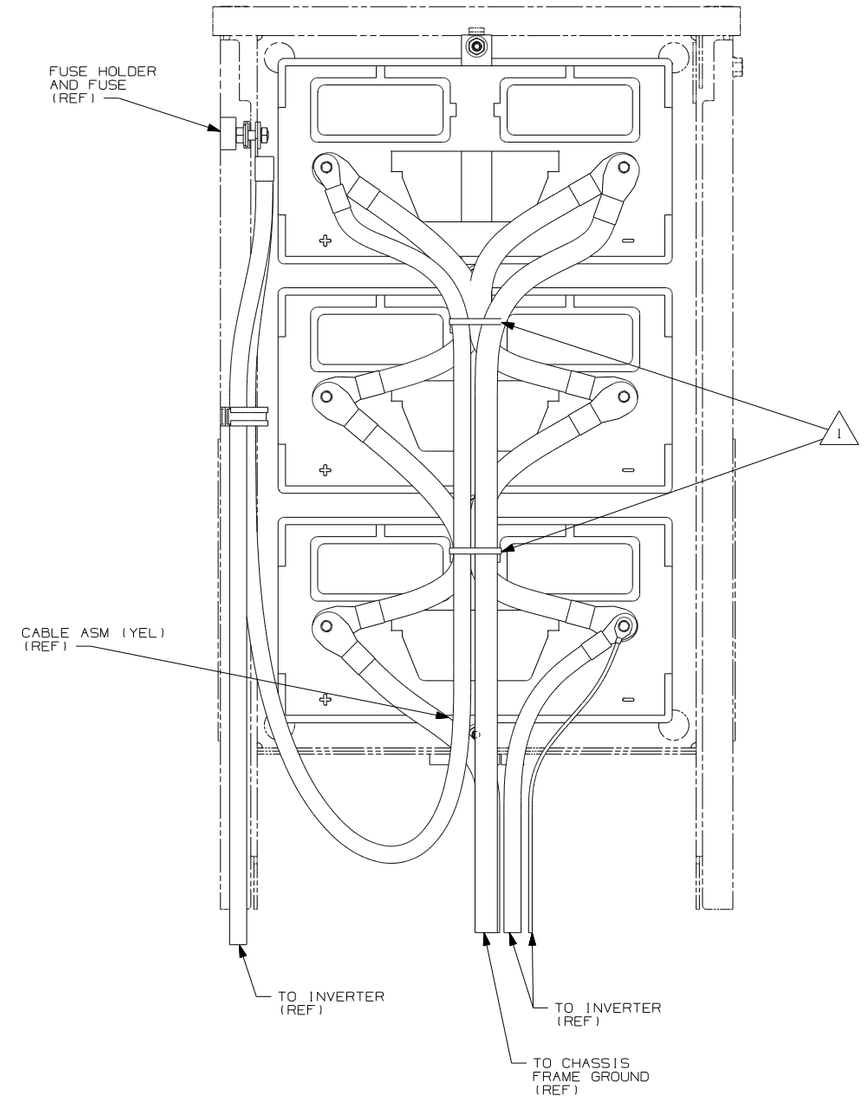

COACH BATTERIES 13X
(TOP VIEW)

40D INVERTER-DC/AC,600 WATT
13X INVERTER/CHARGER 2.0 KW
265 CODES/STANDARDS-CSA/CMVSS
1B1 CODES/STANDARDS USA

1 ROUTE CABLES SO BATTERY CAPS CAN BE REMOVED FOR SERVICE.
USE WIRE TIE 008343-02-000 AS SHOWN AND AS NEEDED.

NOTES:

FOR ELECTRICAL TORQUE SPECIFICATIONS SEE DWG NO. 128783-01-000

X-X FOR ELECTRICAL CALLOUTS SEE DWG NO. 121339-01-000

1B1 265

FIRST USED 07 P, R, S-SERIES

DO NOT SCALE DRAWING

TITLE: BATTERY INSTL

SHEET 5 PART NO 159642 REV

RELEASE	REV A	DATE	DWG NO 158345

REV	ZONE	REVISION RECORD	DATE	DFTR-ORIG

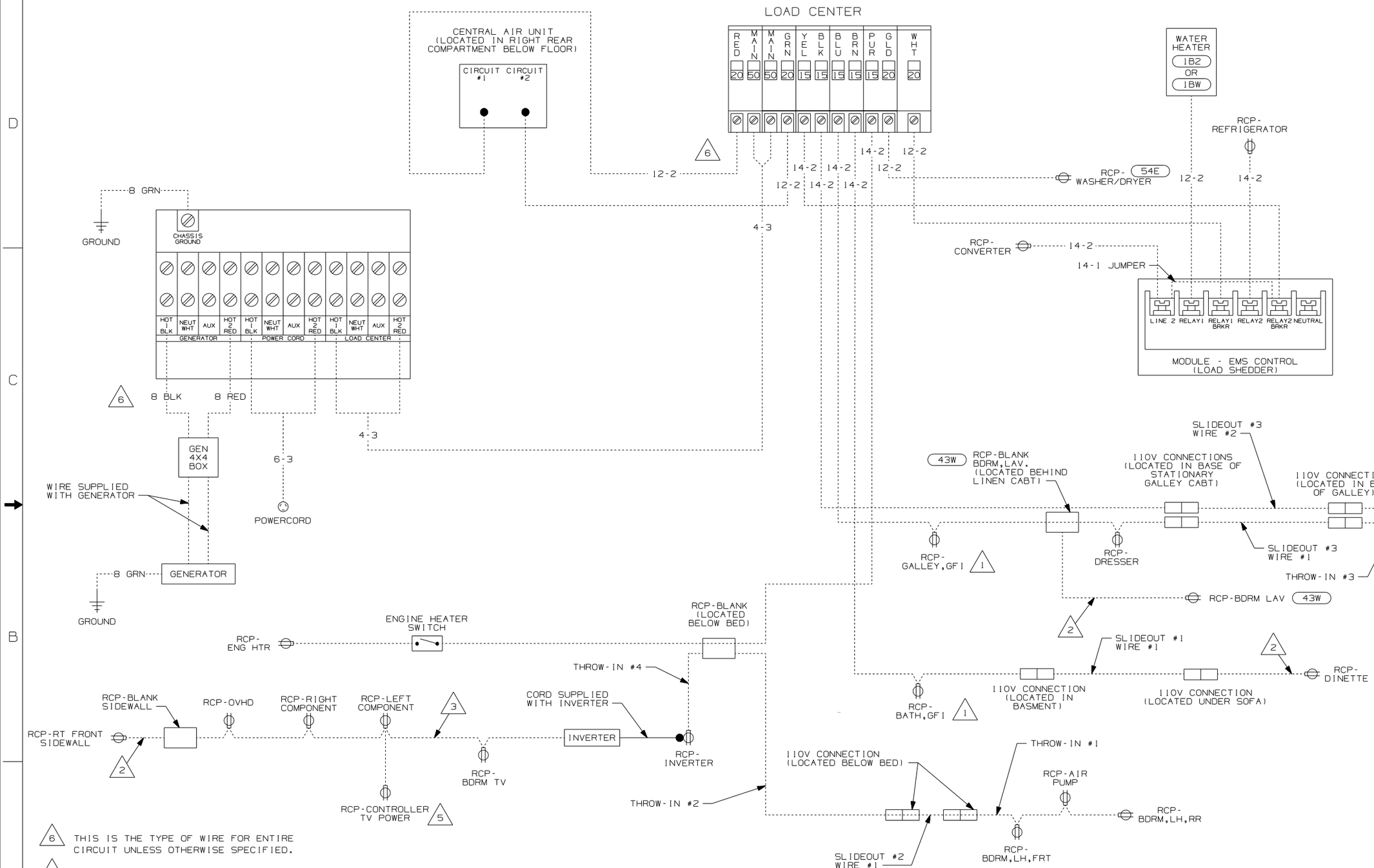

1BW	WTR HTR-10GL/160UTPUT/MTRAID
43W	CABINET-LAVATORY
54E	WASHER/DRYER
1B2	WTR HTR-10GAL/ELEC/LP/MTRAID
78J	ELECTRICAL SYSTEM-50 AMP
40D	INVERTER-DC/AC,400 WATT
265	CODES/STANDARDS-CSA/CMVSS
1B1	CODES/STANDARDS USA

1B1 265 40D 78J

6 THIS IS THE TYPE OF WIRE FOR ENTIRE CIRCUIT UNLESS OTHERWISE SPECIFIED.

5 SEE WIRING DIAGRAM-AUTO FOR ADDITIONAL INFORMATION.

4 WIRE ROUTED THROUGH FLOOR.

3 WIRE ROUTED IN ROOF.

2 WIRE ROUTED IN SIDEWALL.

1 ALL OUTLETS DOWN STREAM AND INCLUDING THIS OUTLET ARE GROUND FAULT INTERUPT PROTECTED.

NOTES:

DFTR	ORIG. DATE
CHKR	ALL DIMENSIONS ARE IN MILLIMETERS
P.E.	
M.E.	FIRST USED 07 P39K
DSNR	

UNSPECIFIED TOLERANCES ARE:
WHOLE DIM (X) :
ONE-PLACE (X.X) :
TWO-PLACE (X.XX) :
ANGLE :
THIRD ANGLE PROJECTION

MATERIAL:

DO NOT SCALE DRAWING

TITLE: WIRING DIAGRAM-BODY,110V

SHEET 1 OF 2 | PART NO 158345 | REV

DWG NO 158345

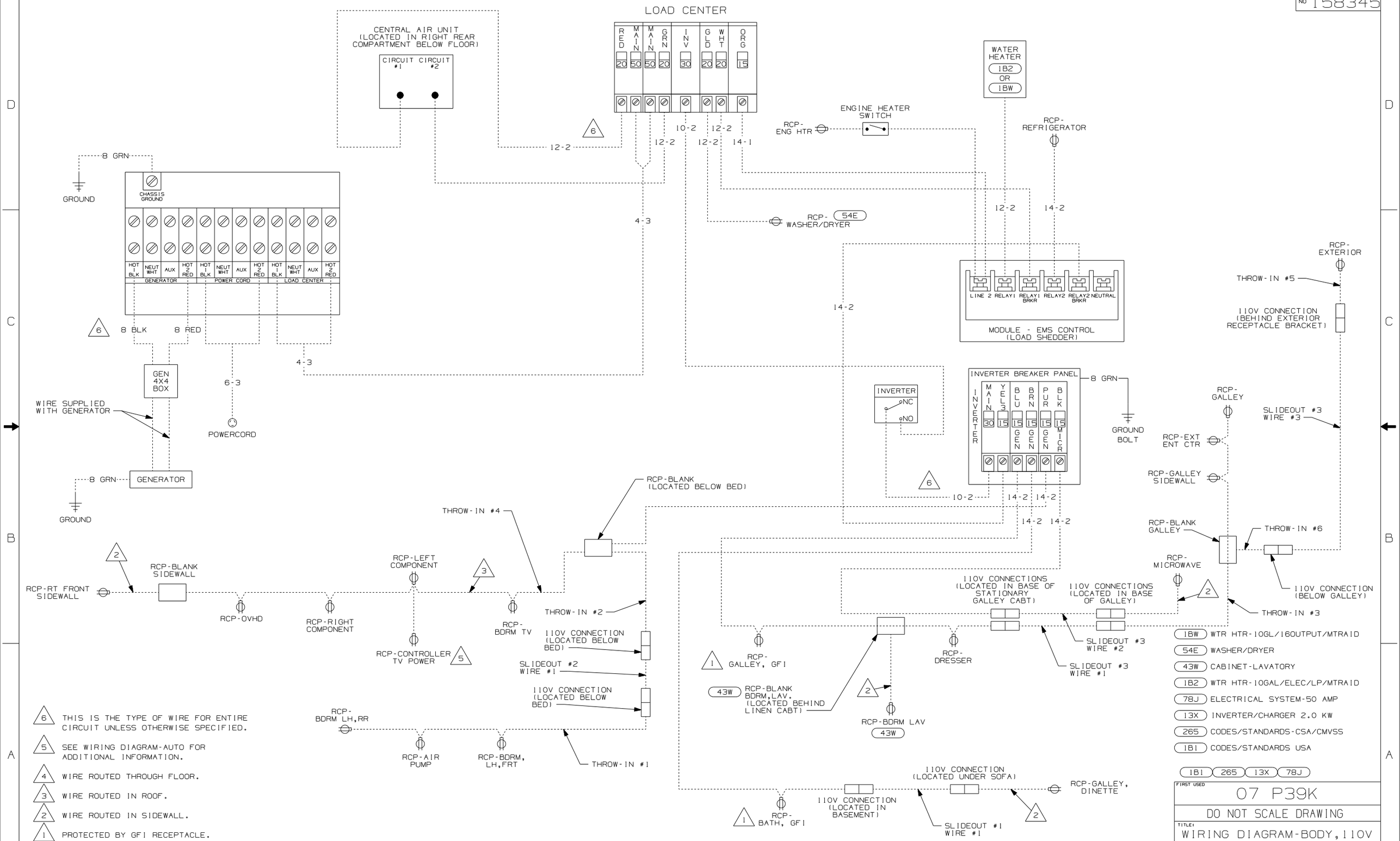

NOTES:

6. THIS IS THE TYPE OF WIRE FOR ENTIRE CIRCUIT UNLESS OTHERWISE SPECIFIED.
5. SEE WIRING DIAGRAM-AUTO FOR ADDITIONAL INFORMATION.
4. WIRE ROUTED THROUGH FLOOR.
3. WIRE ROUTED IN ROOF.
2. WIRE ROUTED IN SIDEWALL.
1. PROTECTED BY GFI RECEPTACLE.

DRAWING NO.	FEATURE
158343-12	1B1 78J
158343-14	1B1 78J 13X
158343-16	265 78J
158343-18	265 78J 13X

RELEASE	REV A	DATE	DWG NO 158343
REV	ZONE	REVISION RECORD	DATE / DFTR-ORIG

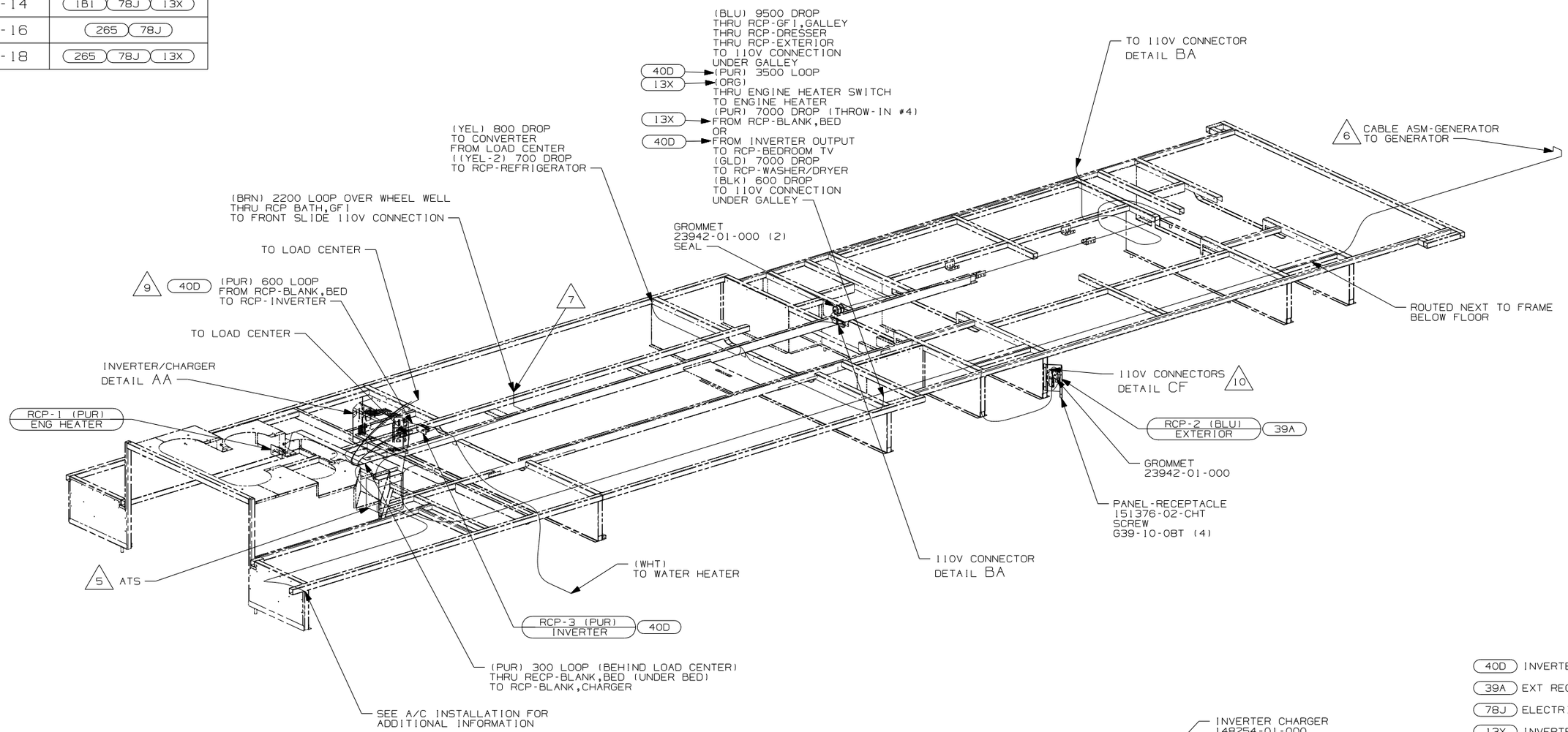

40D INVERTER-DC/AC,600 WATT
39A EXT RECEPTACLE DPLX 120VAC
78J ELECTRICAL SYSTEM-50 AMP
13X INVERTER/CHARGER 2.0 KW
265 CODES/STANDARDS-CSA/CMVSS
1B1 CODES/STANDARDS USA

10 LOCATE 110V CONNECTOR BEHIND EXT RECP PANEL.

9 CUT LOOP & CONNECT AS SHOWN IN DETAIL AA.

8 SEE WIRING INSTL-CHASSIS FOR ADDITIONAL INFORMATION.

7 ROUTE WIRES WITH WATER LINES THRU FLOOR.

6 FOR MORE INFORMATION SEE GENERATOR INSTALLATION.

5 FOR MORE INFORMATION SEE LOAD CENTER/ATS ASM.

4. FOR MORE INFORMATION SEE WIRING DIAGRAM-BODY,110V.

3. ALL GROUND WIRE TO BE COVERED WITH TUBING 8041-02-000.

2. ALL 110V WIRE TO BE CLAMPED WITH CLAMP 10497-05-000 WITHIN 200MM OF OUTLET BOXES, USE SCREW G67-10-12B.

1. ALL WIRES TO BE SECURED WITH CLAMP 10495 OR 10497 OR WIRE TIE 8343 OR 108046 EVERY 600MM, USE SCREW G67-XX-XXX OR G56-XX-XXX AS APPROPRIATE FOR INSTALLATION.

NOTES:

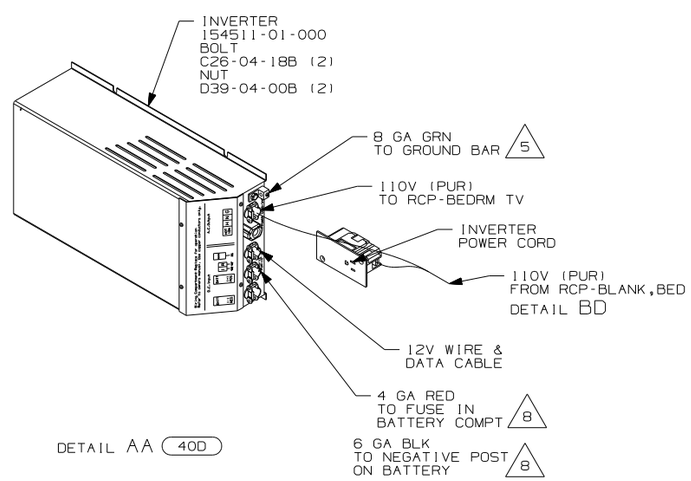

DETAIL AA 40D

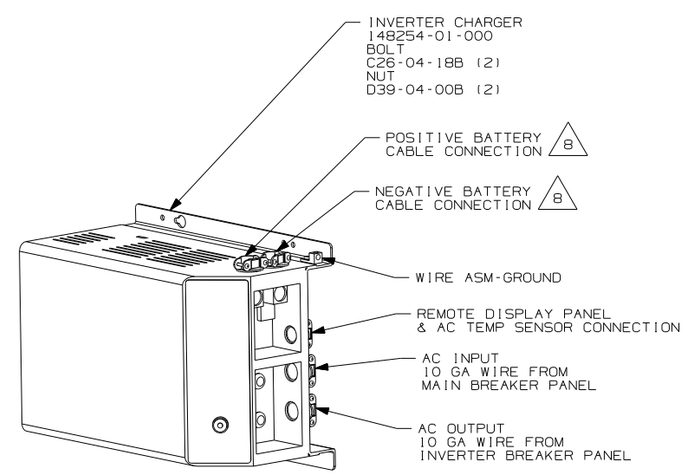

DETAIL AA 13X

1B1 265

WINNEBAGO INDUSTRIES

DFTR	ORIG. DATE
CHKR	ALL DIMENSIONS ARE IN MILLIMETERS
P.E.	
M.E.	FIRST USED 07 P39K
DSNR	

UNSPECIFIED TOLERANCES ARE:
WHOLE DIM (X) : 3
ONE-PLACE (X.X) : 1.5
TWO-PLACE (X.XX) : 0.50
ANGLE : 1°

MATERIAL:

THIRD ANGLE PROJECTION

DO NOT SCALE DRAWING

TITLE: WIRING INSTL-BODY,110V

SHEET 1 OF 3 | PART NO 158343 | REV

DWG NO 158343

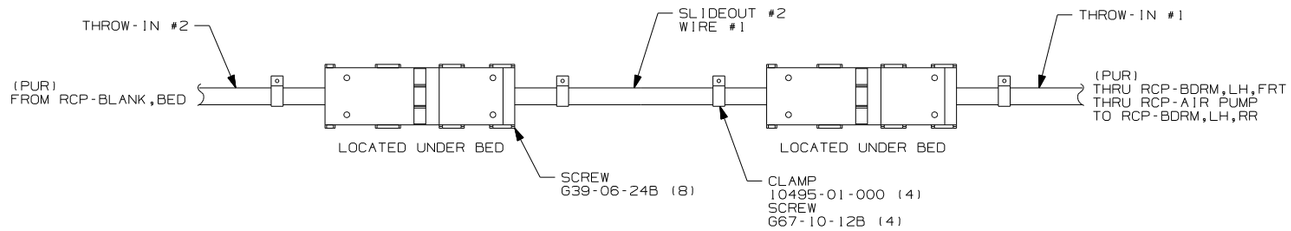

DETAIL BC

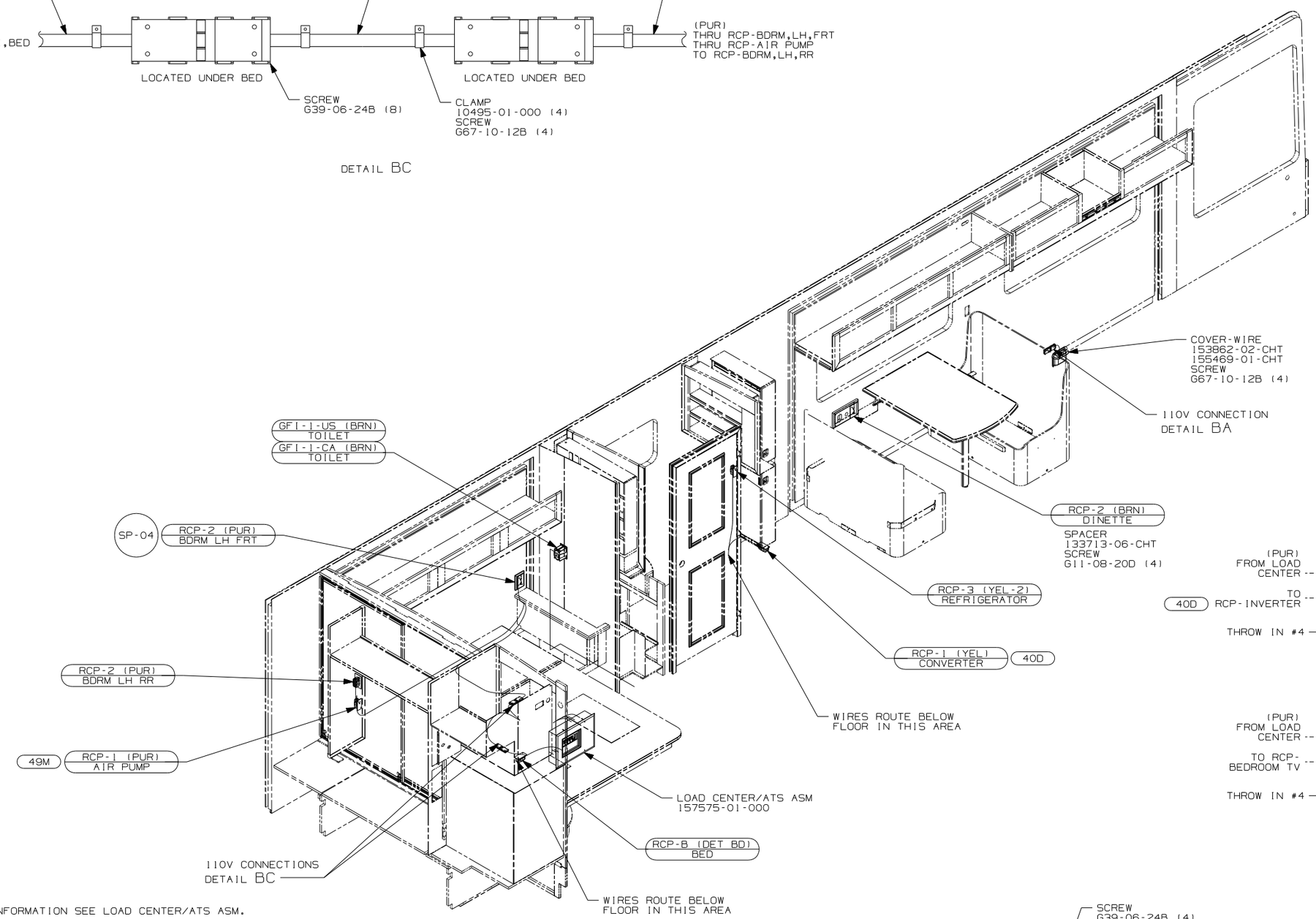

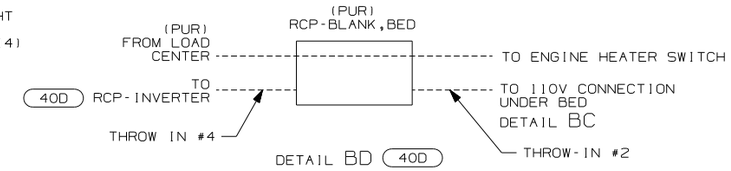

DETAIL BD (40D)

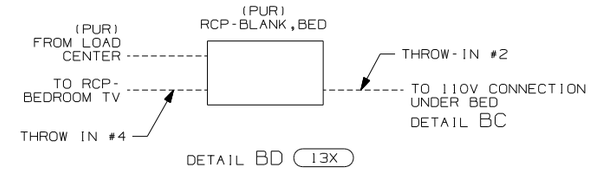

DETAIL BD (13X)

(13X) INVERTER/CHARGER 2.0 KW

(40D) INVERTER-DC/AC,600 WATT

(49M) SLEEP NUMBER BED-QUEEN SIZE

(265) CODES/STANDARDS-CSA/CMVSS

(181) CODES/STANDARDS USA

5. FOR MORE INFORMATION SEE LOAD CENTER/ATS ASM.

4. FOR MORE INFORMATION SEE WIRING DIAGRAM-BODY,110V.

3. ALL GROUND WIRE TO BE COVERED WITH TUBING 8041-02-000.

2. ALL 110V WIRE TO BE CLAMPED WITH CLAMP 10497-05-000 WITHIN 200MM OF OUTLET BOXES, USE SCREW G67-10-12B.

1. ALL WIRES TO BE SECURED WITH CLAMP 10495 OR 10497 OR WIRE TIE 8343 OR 108046 EVERY 600MM, USE SCREW G67-XX-XXX OR G56-XX-XXX AS APPROPRIATE FOR INSTALLATION.

NOTES:

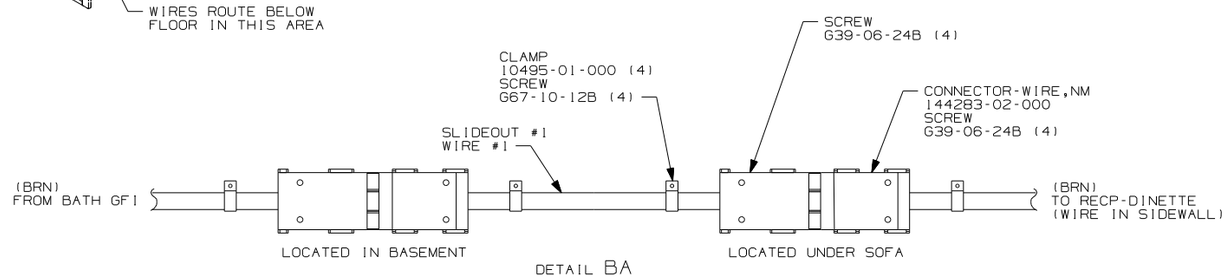

DETAIL BA

(181) (265)

FIRST USED	07 P39K
	DO NOT SCALE DRAWING
TITLE:	WIRING INSTL-BODY,110V
SHEET 2	PART NO 158343 REV

DWG NO 158343

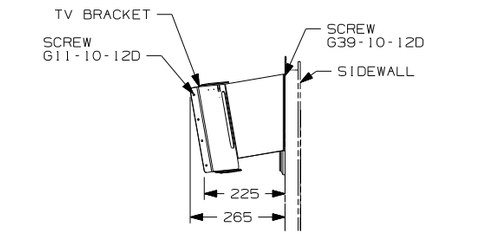

VIEW CB

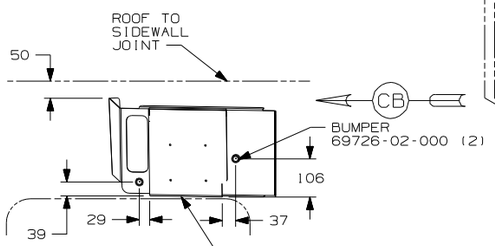

VIEW CA
(VIEW SHOWN
WITHOUT TV)

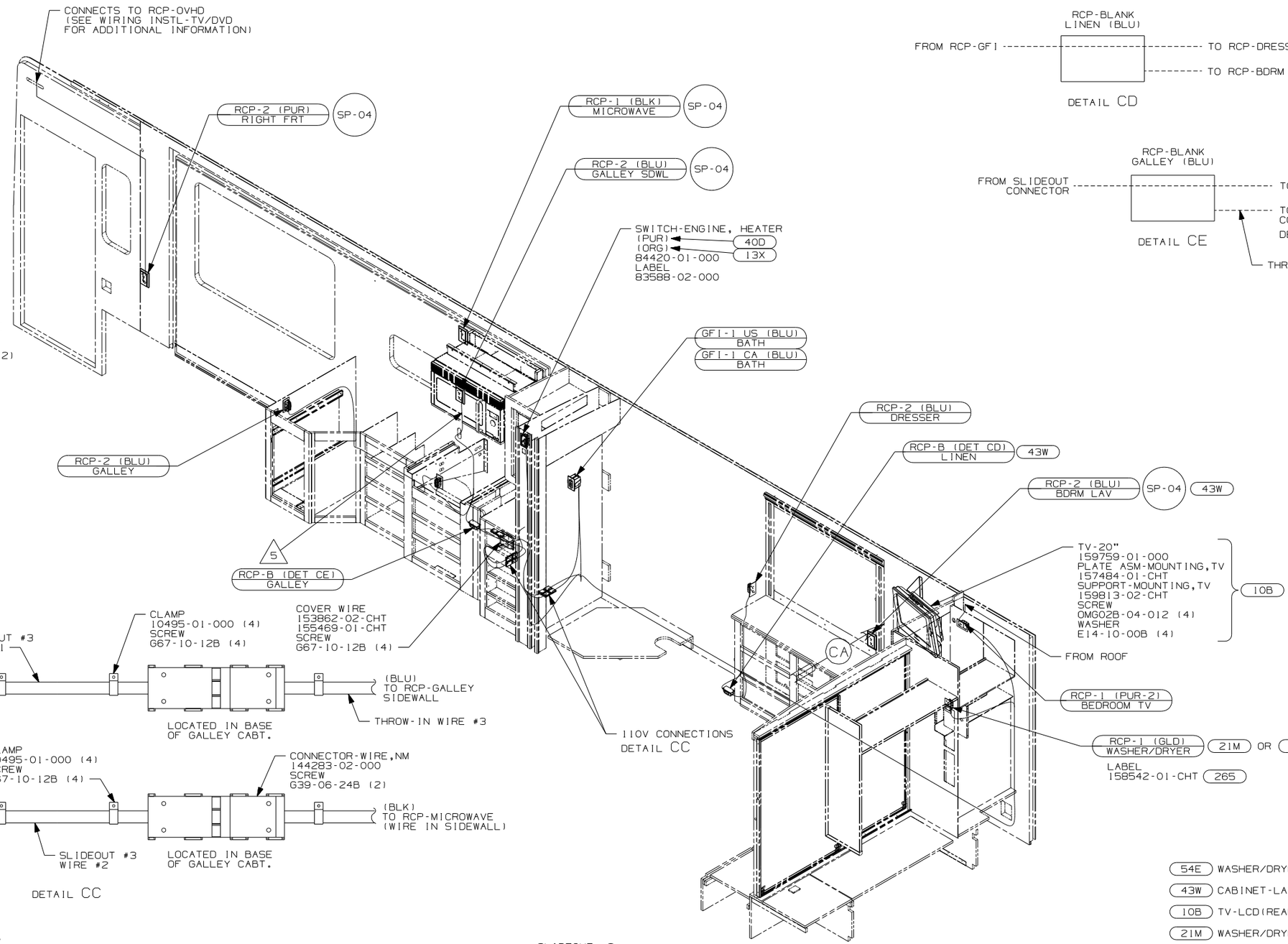

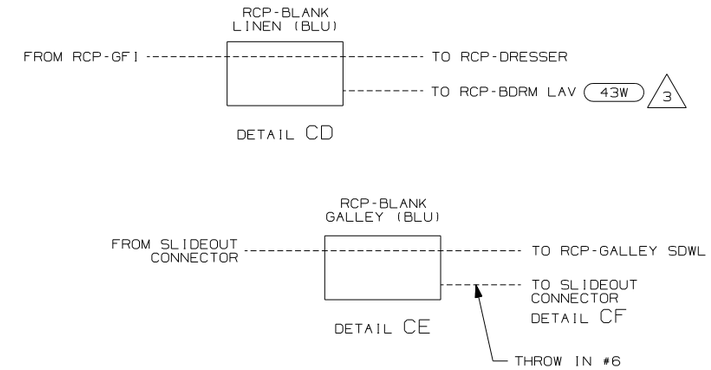

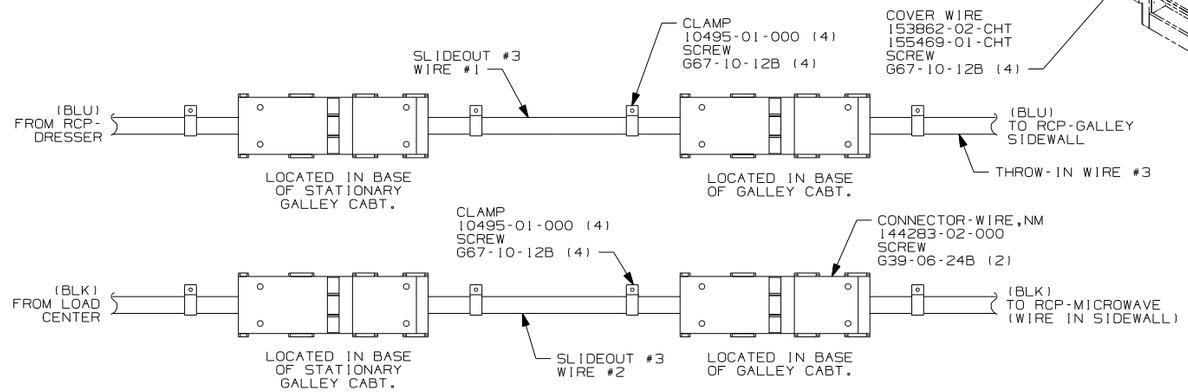

DETAIL CC

5 ROUTE WIRE IN SIDEWALL DURING INSTALLATION.

4 WIRE FROM ROOF ASM.

3 WIRE TO BE ROUTED IN SIDEWALL.

2. ALL 110V WIRES TO BE CLAMPED WITH CLAMP 10497-05-000 WITHIN 200MM OF OUTLET BOXES, USE SCREW G67-10-12B.

1. ALL WIRES TO BE SECURED WITH CLAMP 10495 OR 10497 OR WIRE TIE 8343 OR 108046 EVERY 600MM, USE SCREW G67-XX-XXX OR G56-XX-XXX AS APPROPRIATE FOR INSTALLATION.

NOTES:

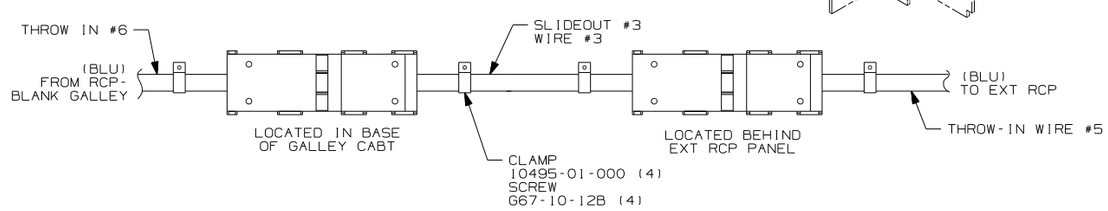

DETAIL CF

54E WASHER/DRYER
43W CABINET-LAVATORY
10B TV-LCD(REAR)EXCHANGE
21M WASHER/DRYER PREP
265 CODES/STANDARDS-CSA/CMVSS
1B1 CODES/STANDARDS USA

1B1 265

FIRST USED	07 P39K
	DO NOT SCALE DRAWING
TITLE:	WIRING INSTL-BODY,110V
SHEET 3	PART NO 158343 REV

RELEASE	REV A	DATE	DWG NO 158344

REV	ZONE	REVISION RECORD	DATE	DFTR-ORIG

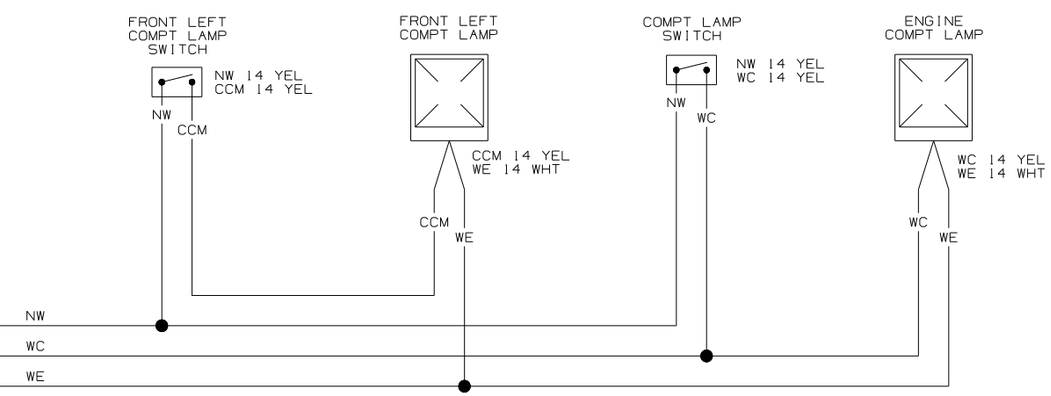

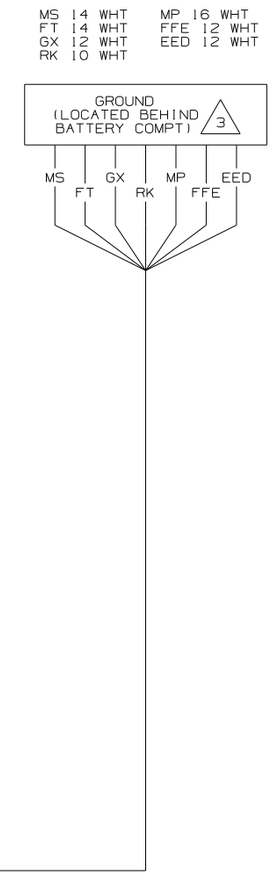

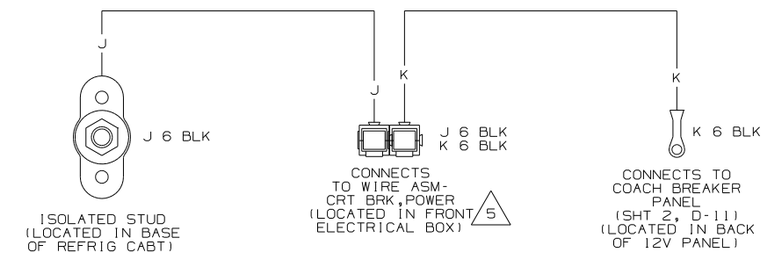

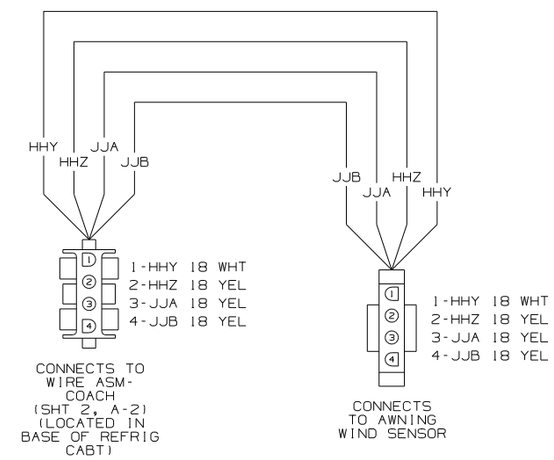

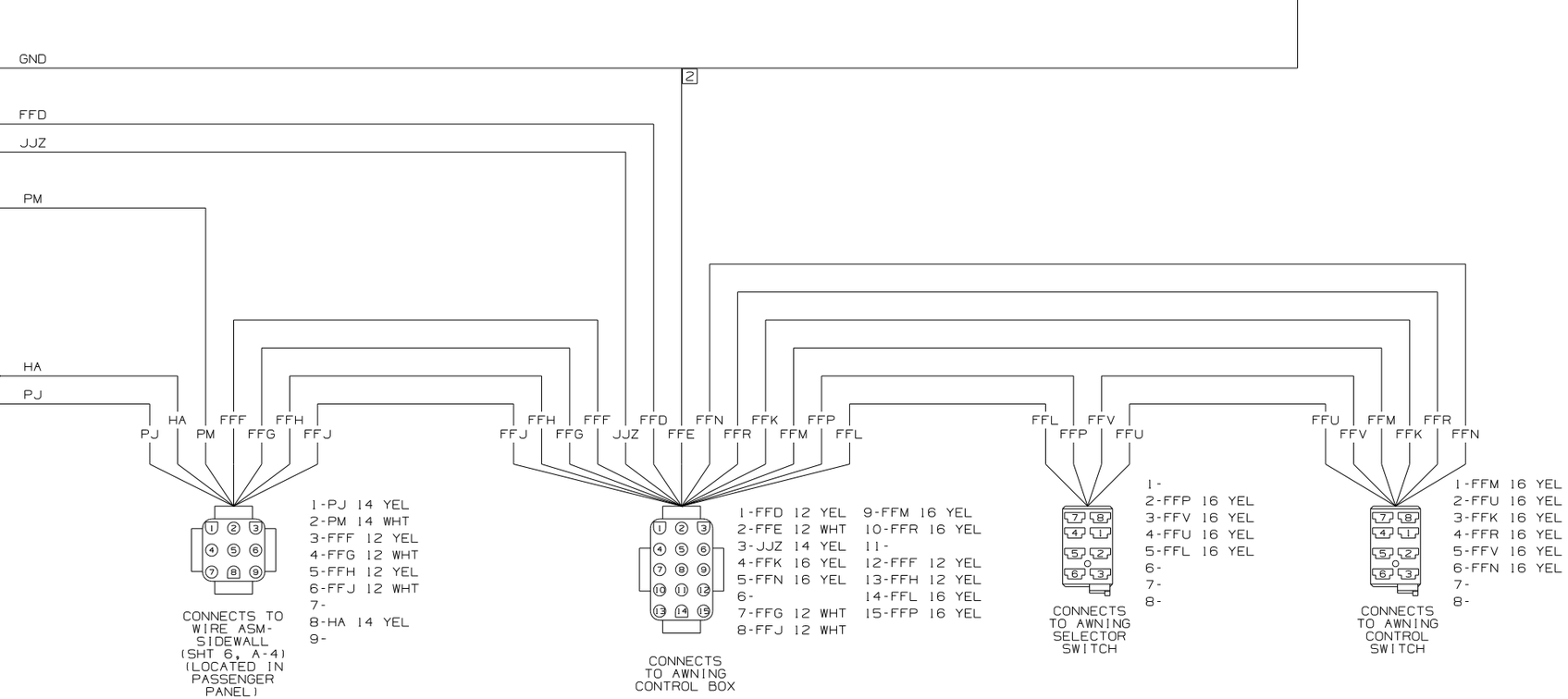

WIRING DIAGRAM-CHASSIS
(WIRE ASM 158346 REV-F)

WINNEBAGO INDUSTRIES

DFTR	ORIG. DATE
CHKR	ALL DIMENSIONS ARE IN MILLIMETERS
P.E.	
M.E.	FIRST USED 07 P39K
DSNR	

UNSPECIFIED TOLERANCES ARE:
WHOLE DIM (X) :
ONE-PLACE (X.X) :
TWO-PLACE (X.XX) :
ANGLE :

MATERIAL:

THIRD ANGLE PROJECTION

DO NOT SCALE DRAWING

TITLE: WIRING DIAGRAM-BODY,12V

F1 | SHEET 1 OF 8 | PART NO 158344 | REV

REF: 1

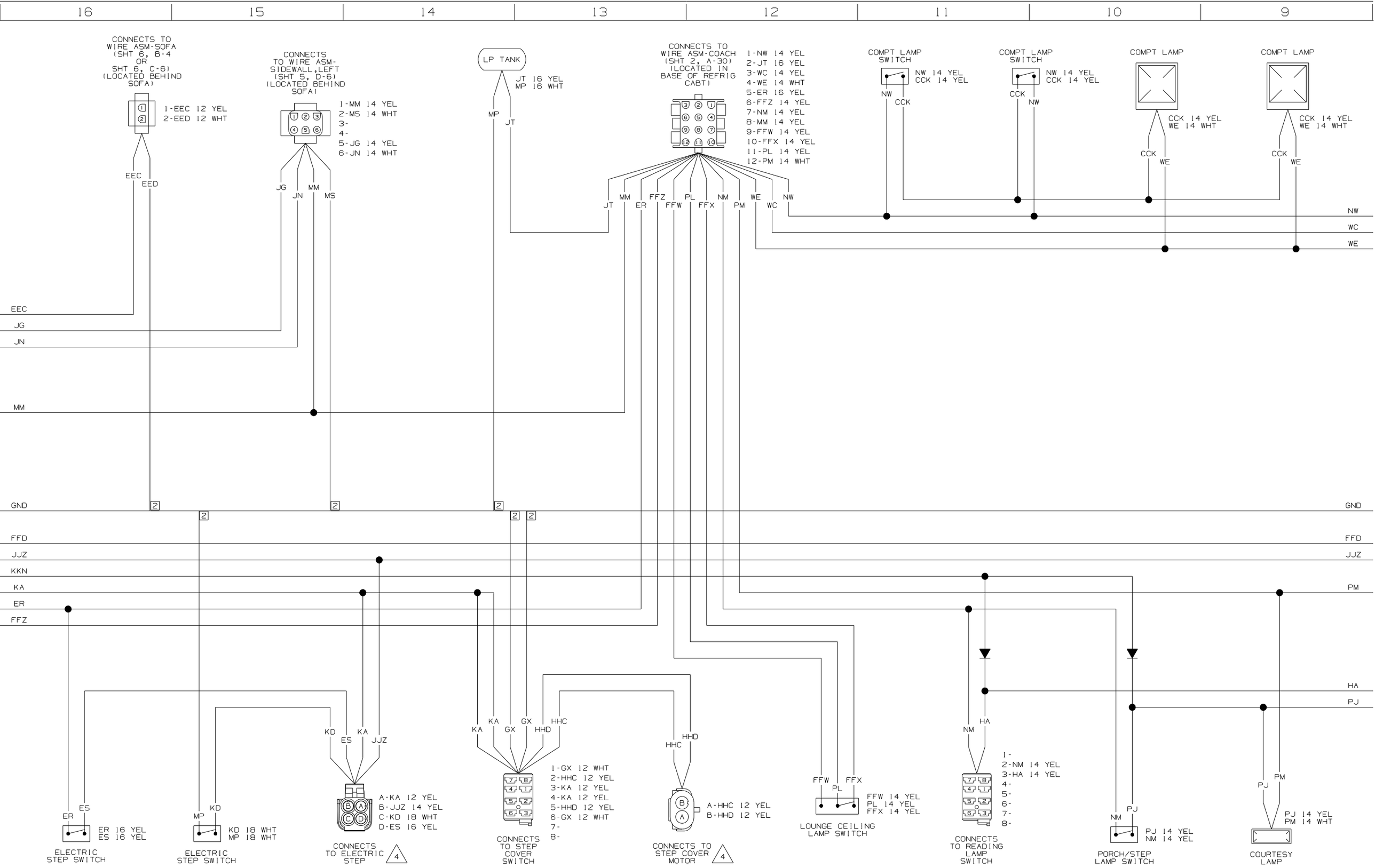

DWG NO 158344 S1 F2 REV

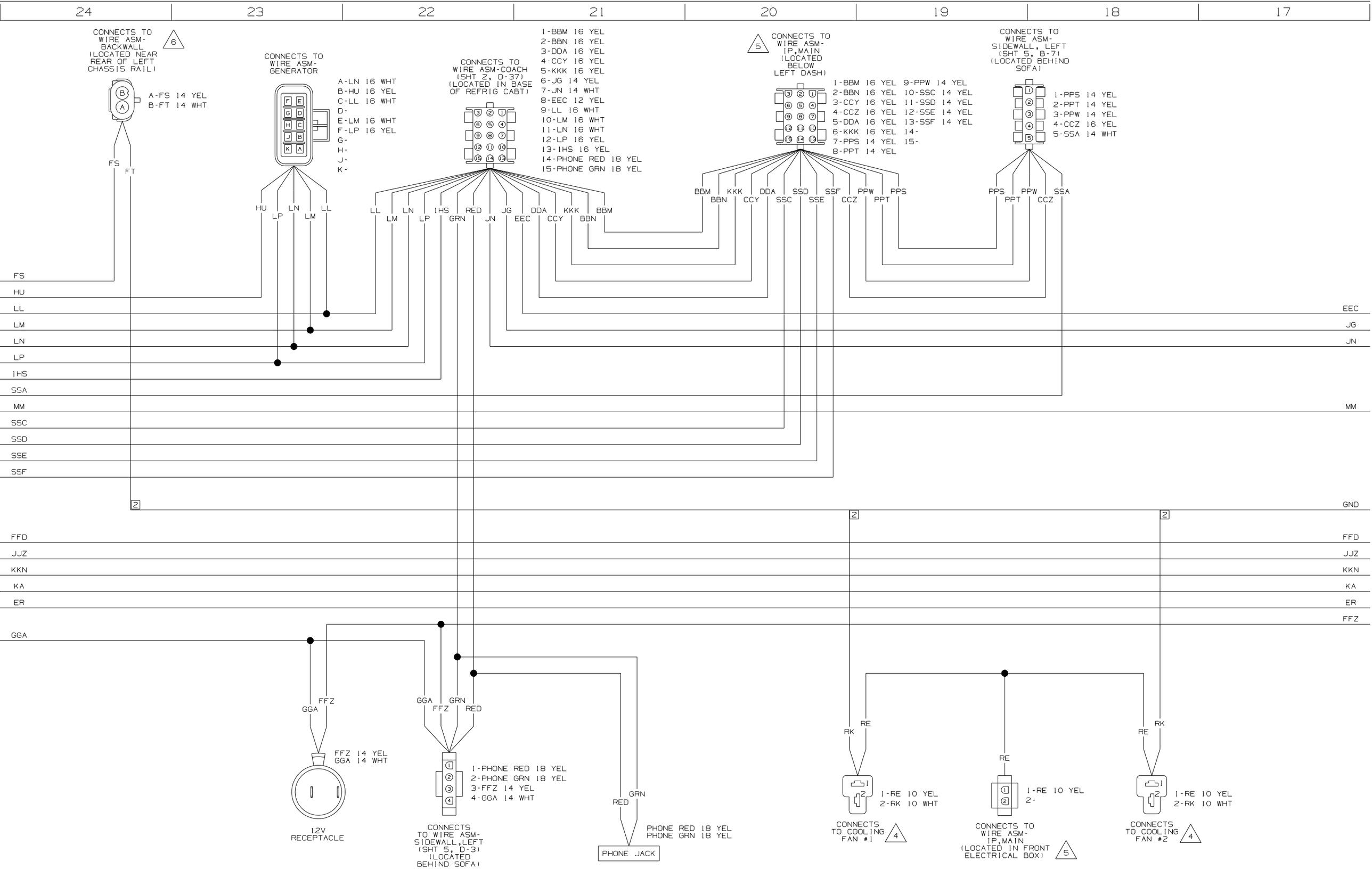
24
23
22
21
20
19
18
17
CONNECTS TO WIRE ASM-BACKWALL (LOCATED NEAR REAR OF LEFT CHASSIS RAIL)
6
A-FS 14 YEL
B-FT 14 WHT
CONNECTS TO WIRE ASM-GENERATOR
A-LN 16 WHT
B-HU 16 YEL
C-LL 16 WHT
D-
E-LM 16 WHT
F-LP 16 YEL
G-
H-
J-
K-
CONNECTS TO WIRE ASM-COACH (SHT 2, D-37) (LOCATED IN BASE OF REFRIG CABT)
1-BBM 16 YEL
2-BBN 16 YEL
3-DDA 16 YEL
4-CCY 16 YEL
5-KKK 16 YEL
6-JG 14 YEL
7-JN 14 WHT
8-EEC 12 YEL
9-LL 16 WHT
10-LM 16 WHT
11-LN 16 WHT
12-LP 16 YEL
13-IHS 16 YEL
14-PHONE RED 18 YEL
15-PHONE GRN 18 YEL
5
CONNECTS TO WIRE ASM-IP,MAIN (LOCATED BELOW LEFT DASH)
1-BBM 16 YEL
2-BBN 16 YEL
3-CCY 16 YEL
4-CCZ 16 YEL
5-DDA 16 YEL
6-KKK 16 YEL
7-PPS 14 YEL
8-PPT 14 YEL
9-PPW 14 YEL
10-SSC 14 YEL
11-SSD 14 YEL
12-SSE 14 YEL
13-SSF 14 YEL
14-
15-
CONNECTS TO WIRE ASM-SIDEWALL, LEFT (SHT 5, B-7) (LOCATED BEHIND SOFA)
1-PPS 14 YEL
2-PPT 14 YEL
3-PPW 14 YEL
4-CCZ 16 YEL
5-SSA 14 WHT
FS
FT
HU
LP
LN
LM
LL
LM
LN
LP
IHS
GRN
JN
JG
EEC
DDA
CCY
KKK
BBN
BBM
BBN
KKK
CCY
DDA
SSC
SSD
SSE
SSF
CCZ
PPW
PPT
PPS
PPS
PPT
PPW
CCZ
SSA
FS
HU
LL
LM
LN
LP
IHS
SSA
MM
SSC
SSD
SSE
SSF
EEC
JG
JN
MM
2
GND
2
2
FFD
JJZ
KKN
KA
ER
FFZ
FFD
JJZ
KKN
KA
ER
GGA
GGA
FFZ
FFZ 14 YEL
GGA 14 WHT
12V RECEPTACLE
GGA
FFZ
GRN
RED
1-PHONE RED 18 YEL
2-PHONE GRN 18 YEL
3-FFZ 14 YEL
4-GGA 14 WHT
CONNECTS TO WIRE ASM-SIDEWALL,LEFT (SHT 5, D-3) (LOCATED BEHIND SOFA)
GRN
RED
PHONE JACK
PHONE RED 18 YEL
PHONE GRN 18 YEL
RK
RE
1-RE 10 YEL
2-RK 10 WHT
CONNECTS TO COOLING FAN #1
4
RE
1-RE 10 YEL
2-
CONNECTS TO WIRE ASM-IP,MAIN (LOCATED IN FRONT ELECTRICAL BOX)
5
RE
RK
1-RE 10 YEL
2-RK 10 WHT
CONNECTS TO COOLING FAN #2
4
DWG NO 158344 S1 F3 REV
24
23
22
21
20
19
18
17
2/13/2007 41

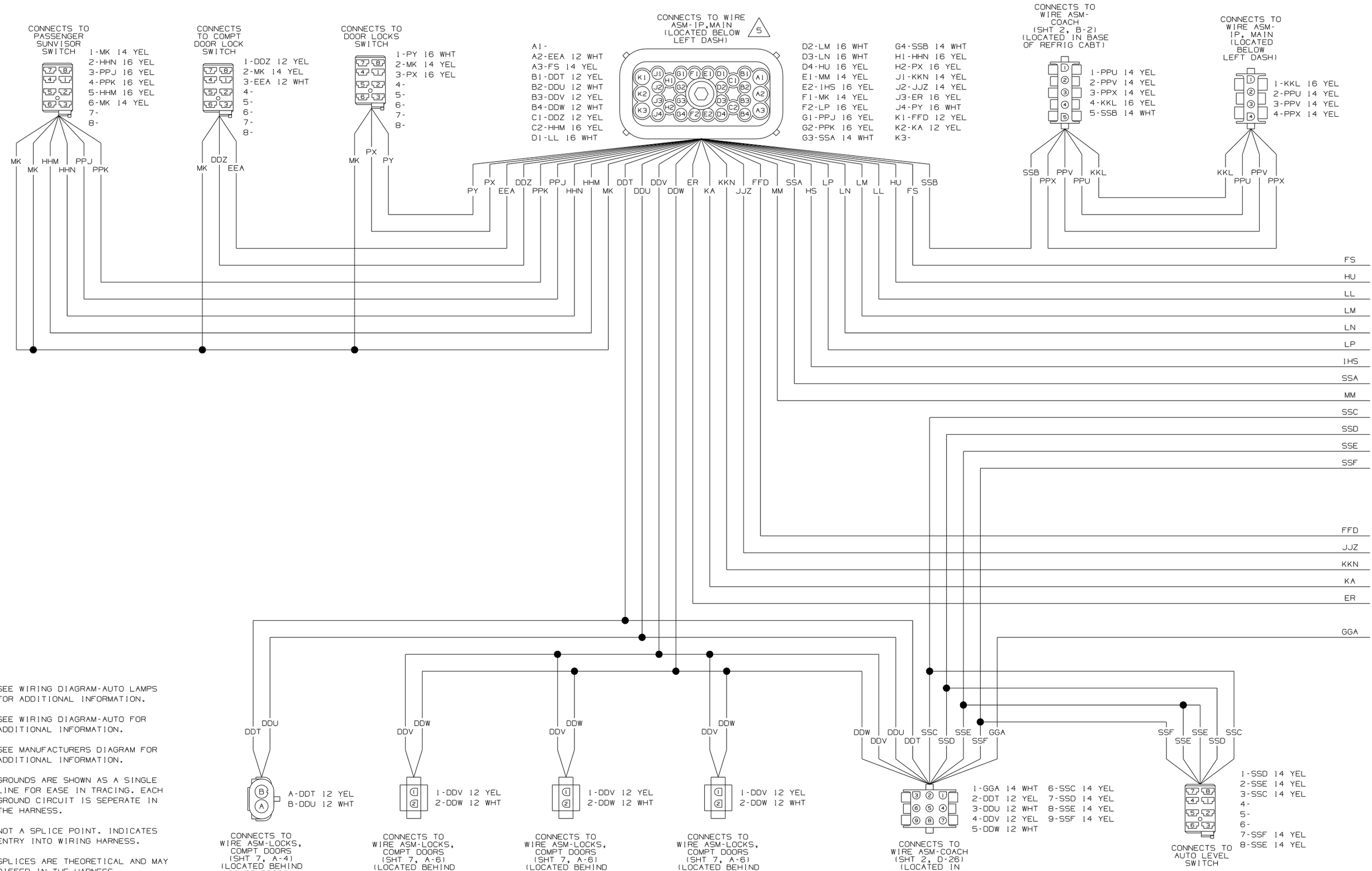

6 SEE WIRING DIAGRAM-AUTO LAMPS FOR ADDITIONAL INFORMATION.

5 SEE WIRING DIAGRAM-AUTO FOR ADDITIONAL INFORMATION.

4 SEE MANUFACTURERS DIAGRAM FOR ADDITIONAL INFORMATION.

3 GROUNDS ARE SHOWN AS A SINGLE LINE FOR EASE IN TRACING. EACH GROUND CIRCUIT IS SEPERATE IN THE HARNESS.

2 NOT A SPLICE POINT. INDICATES ENTRY INTO WIRING HARNESS.

1. SPLICES ARE THEORETICAL AND MAY DIFFER IN THE HARNESS.

NOTES:

DWG NO 158344 S1 F4 REV

DWG NO 158344

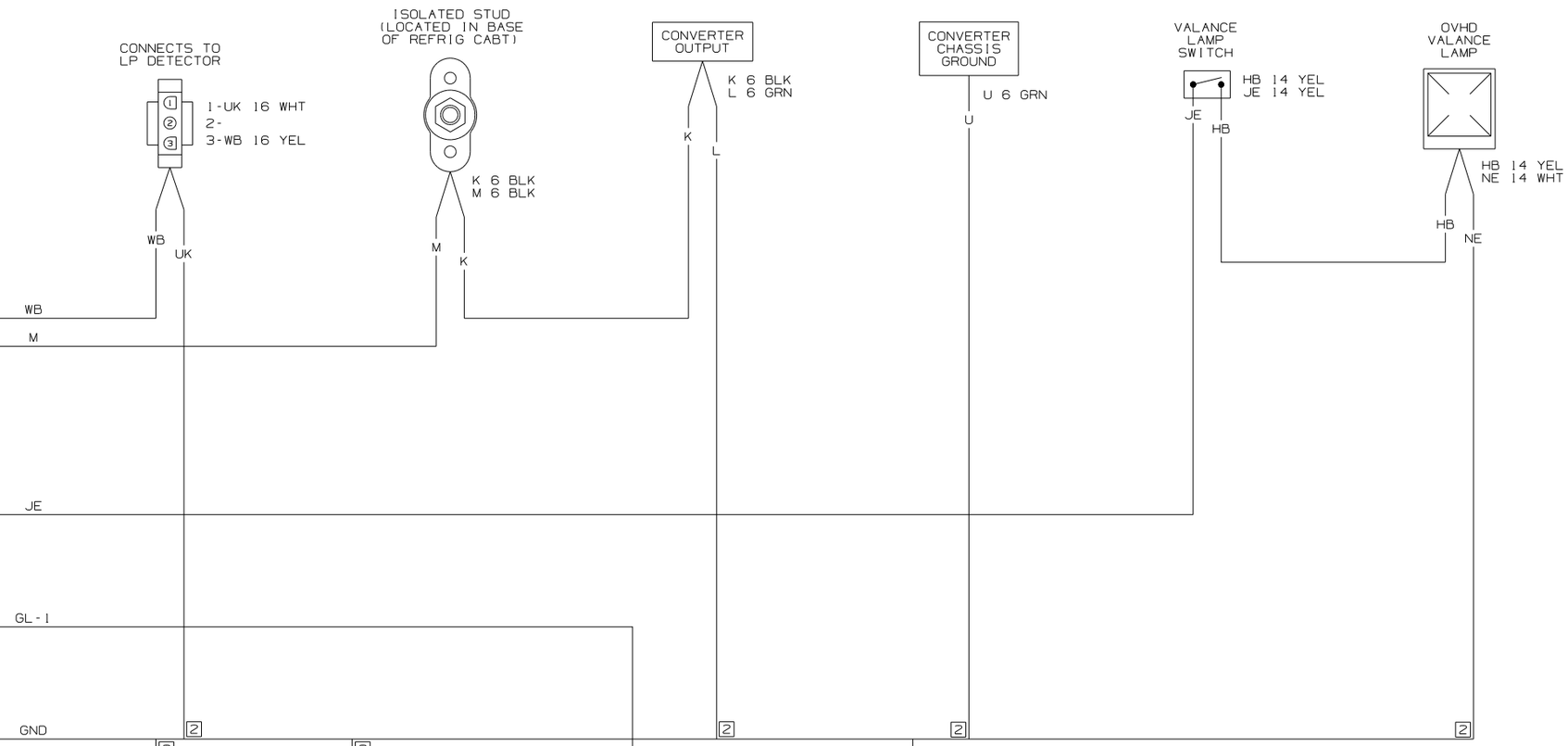

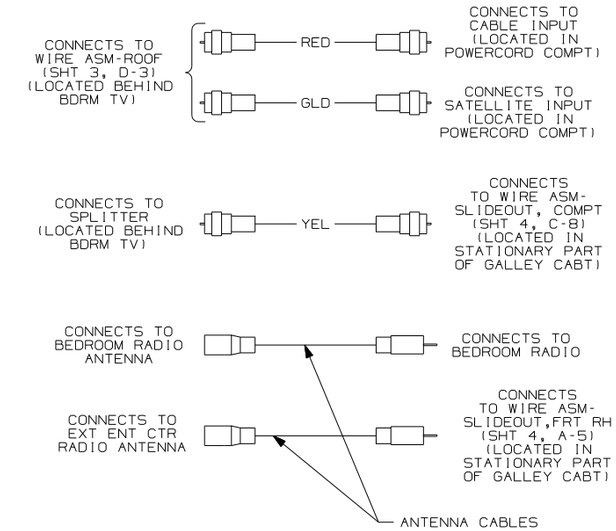

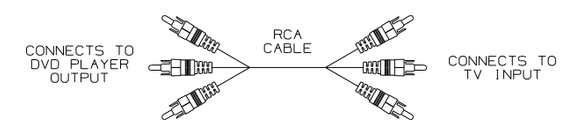

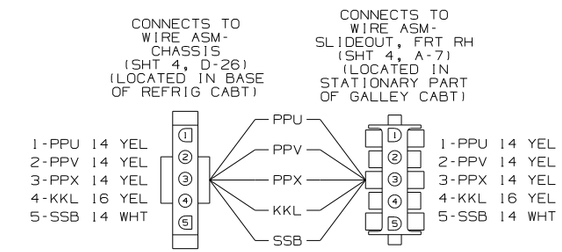

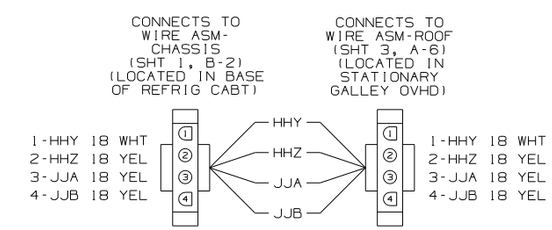

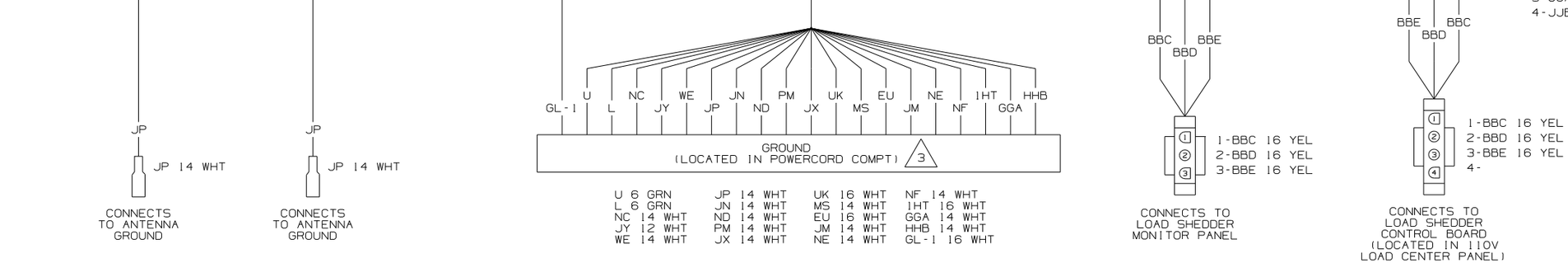

WIRING DIAGRAM-COACH
(WIRE ASM 158347 REV-J)

FIRST USED	07 P39K
	DO NOT SCALE DRAWING
TITLE:	WIRING DIAGRAM-BODY, 12V
F1 SHEET 2	PART NO 158344 REV

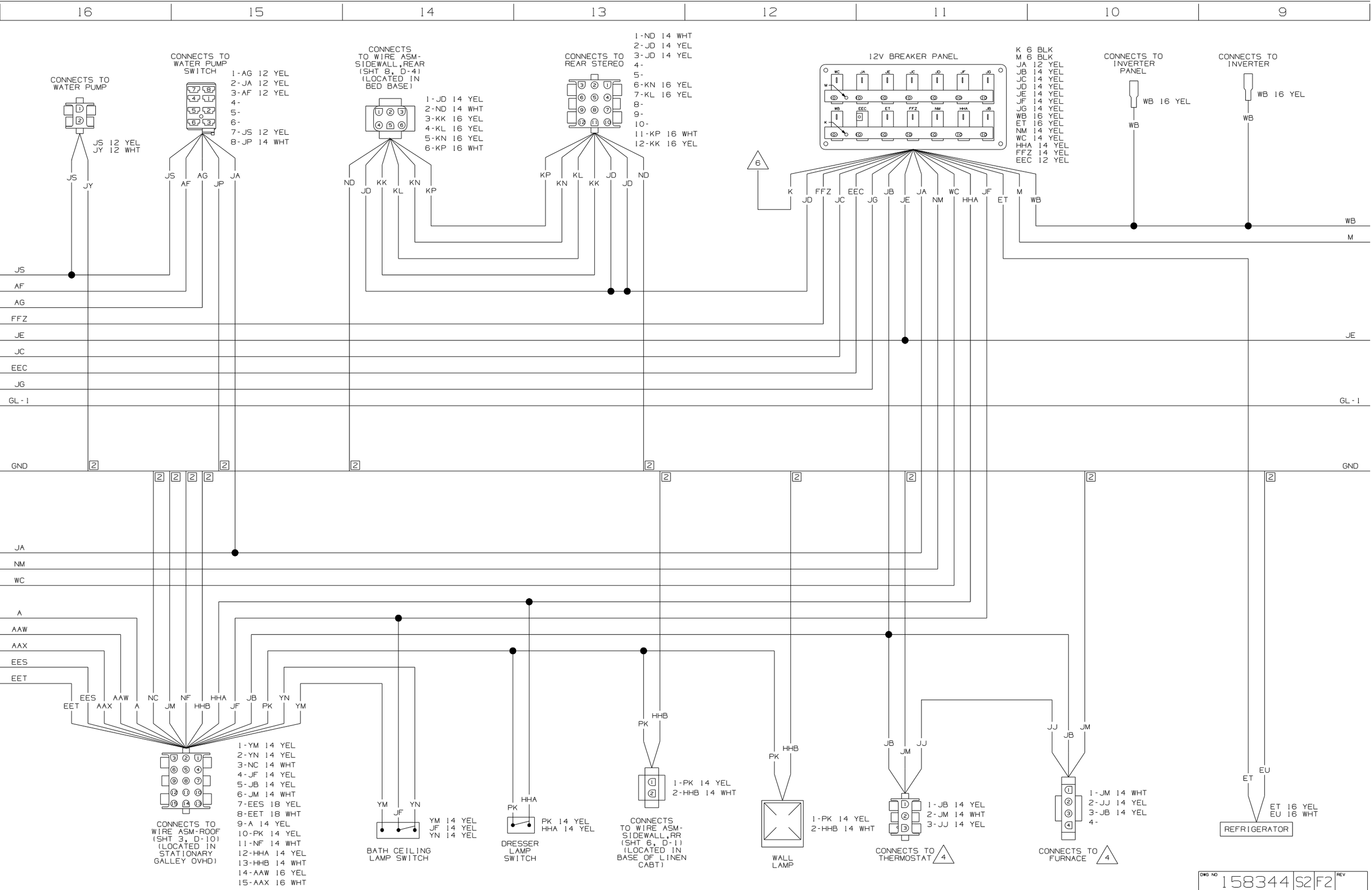
16
15
14
13
12
11
10
9
CONNECTS TO WATER PUMP
JS 12 YEL
JY 12 WHT
CONNECTS TO WATER PUMP SWITCH
1-AG 12 YEL
2-JA 12 YEL
3-AF 12 YEL
4-
5-
6-
7-JS 12 YEL
8-JP 14 WHT
CONNECTS TO WIRE ASM-SIDEWALL,REAR (SHT 8, D-4) (LOCATED IN BED BASE)
1-JD 14 YEL
2-ND 14 WHT
3-KK 16 YEL
4-KL 16 YEL
5-KN 16 YEL
6-KP 16 WHT
CONNECTS TO REAR STEREO
1-ND 14 WHT
2-JD 14 YEL
3-JD 14 YEL
4-
5-
6-KN 16 YEL
7-KL 16 YEL
8-
9-
10-
11-KP 16 WHT
12-KK 16 YEL
12V BREAKER PANEL
K 6 BLK
M 6 BLK
JA 12 YEL
JB 14 YEL
JC 14 YEL
JD 14 YEL
JE 14 YEL
JF 14 YEL
JG 14 YEL
WB 16 YEL
ET 16 YEL
NM 14 YEL
WC 14 YEL
HHA 14 YEL
FFZ 14 YEL
EEC 12 YEL
CONNECTS TO INVERTER PANEL
WB 16 YEL
CONNECTS TO INVERTER
WB 16 YEL
JS
AF
AG
FFZ
JE
JC
EEC
JG
GL-1
GND
JA
NM
WC
A
AAW
AAX
EES
EET
CONNECTS TO WIRE ASM-ROOF (SHT 3, D-10) (LOCATED IN STATIONARY GALLEY OVHD)
1-YM 14 YEL
2-YN 14 YEL
3-NC 14 WHT
4-JF 14 YEL
5-JB 14 YEL
6-JM 14 WHT
7-EES 18 YEL
8-EET 18 WHT
9-A 14 YEL
10-PK 14 YEL
11-NF 14 WHT
12-HHA 14 YEL
13-HHB 14 WHT
14-AAW 16 YEL
15-AAX 16 WHT
BATH CEILING LAMP SWITCH
YM 14 YEL
JF 14 YEL
YN 14 YEL
DRESSER LAMP SWITCH
PK 14 YEL
HHA 14 YEL
CONNECTS TO WIRE ASM-SIDEWALL,RR (SHT 6, D-1) (LOCATED IN BASE OF LINEN CABT)
1-PK 14 YEL
2-HHB 14 WHT
WALL LAMP
1-PK 14 YEL
2-HHB 14 WHT
CONNECTS TO THERMOSTAT
1-JB 14 YEL
2-JM 14 WHT
3-JJ 14 YEL
CONNECTS TO FURNACE
1-JM 14 WHT
2-JJ 14 YEL
3-JB 14 YEL
4-
REFRIGERATOR
ET 16 YEL
EU 16 WHT
DWG NO 158344 S2 F2 REV
2/13/2007 44

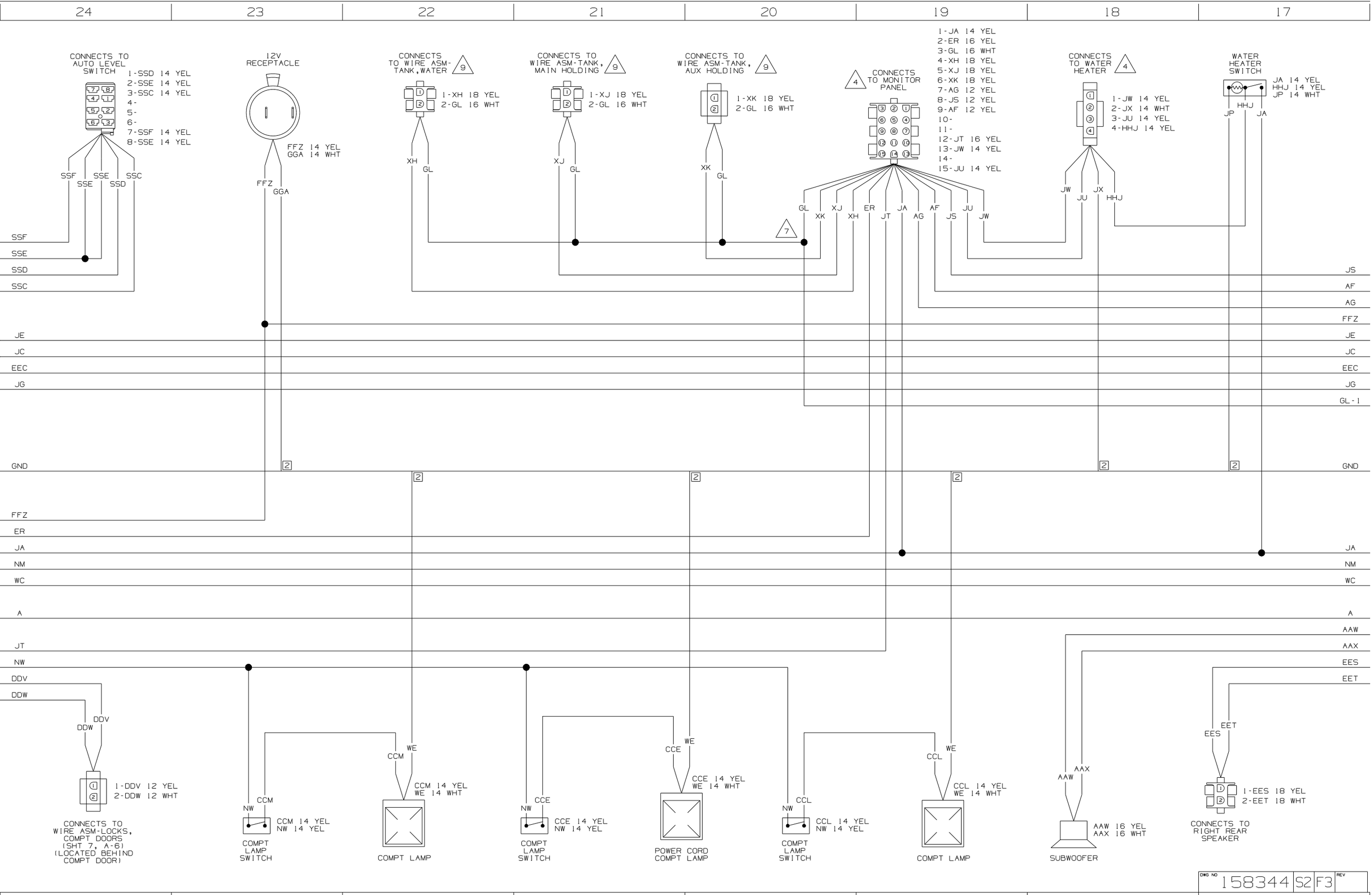
24
23
22
21
20
19
18
17
CONNECTS TO AUTO LEVEL SWITCH
1-SSD 14 YEL
2-SSE 14 YEL
3-SSC 14 YEL
4-
5-
6-
7-SSF 14 YEL
8-SSE 14 YEL
SSF
SSE
SSE
SSD
SSC
12V RECEPTACLE
FFZ 14 YEL
GGA 14 WHT
FFZ
GGA
CONNECTS TO WIRE ASM-TANK,WATER
9
1-XH 18 YEL
2-GL 16 WHT
XH
GL
CONNECTS TO WIRE ASM-TANK, MAIN HOLDING
9
1-XJ 18 YEL
2-GL 16 WHT
XJ
GL
CONNECTS TO WIRE ASM-TANK, AUX HOLDING
9
1-XK 18 YEL
2-GL 16 WHT
XK
GL
4
CONNECTS TO MONITOR PANEL
1-JA 14 YEL
2-ER 16 YEL
3-GL 16 WHT
4-XH 18 YEL
5-XJ 18 YEL
6-XK 18 YEL
7-AG 12 YEL
8-JS 12 YEL
9-AF 12 YEL
10-
11-
12-JT 16 YEL
13-JW 14 YEL
14-
15-JU 14 YEL
GL
XK
XJ
XH
ER
JT
JA
AG
AF
JS
JU
JW
7
CONNECTS TO WATER HEATER
4
1-JW 14 YEL
2-JX 14 YEL
3-JU 14 YEL
4-HHJ 14 YEL
JW
JU
JX
HHJ
WATER HEATER SWITCH
JA 14 YEL
HHJ 14 YEL
JP 14 WHT
HHJ
JP
JA
SSF
SSE
SSD
SSC
JE
JC
EEC
JG
GND
FFZ
ER
JA
NM
WC
A
JT
NW
DDV
DDW
JS
AF
AG
FFZ
JE
JC
EEC
JG
GL-1
GND
JA
NM
WC
A
AAW
AAX
EES
EET
2
DDV
DDW
1-DDV 12 YEL
2-DDW 12 WHT
CONNECTS TO WIRE ASM-LOCKS, COMPT DOORS (SHT 7, A-6) (LOCATED BEHIND COMPT DOOR)
CCM
NW
CCM 14 YEL
NW 14 YEL
COMPT LAMP SWITCH
WE
CCM
CCM 14 YEL
WE 14 WHT
COMPT LAMP
CCE
NW
CCE 14 YEL
NW 14 YEL
COMPT LAMP SWITCH
WE
CCE
CCE 14 YEL
WE 14 WHT
POWER CORD COMPT LAMP
CCL
NW
CCL 14 YEL
NW 14 YEL
COMPT LAMP SWITCH
WE
CCL
CCL 14 YEL
WE 14 WHT
COMPT LAMP
AAX
AAW
AAW 16 YEL
AAX 16 WHT
SUBWOOFER
EET
EES
1-EES 18 YEL
2-EET 18 WHT
CONNECTS TO RIGHT REAR SPEAKER
DWG NO 158344 S2 F3 REV
24
23
22
21
20
19
18
17
2/13/2007 45

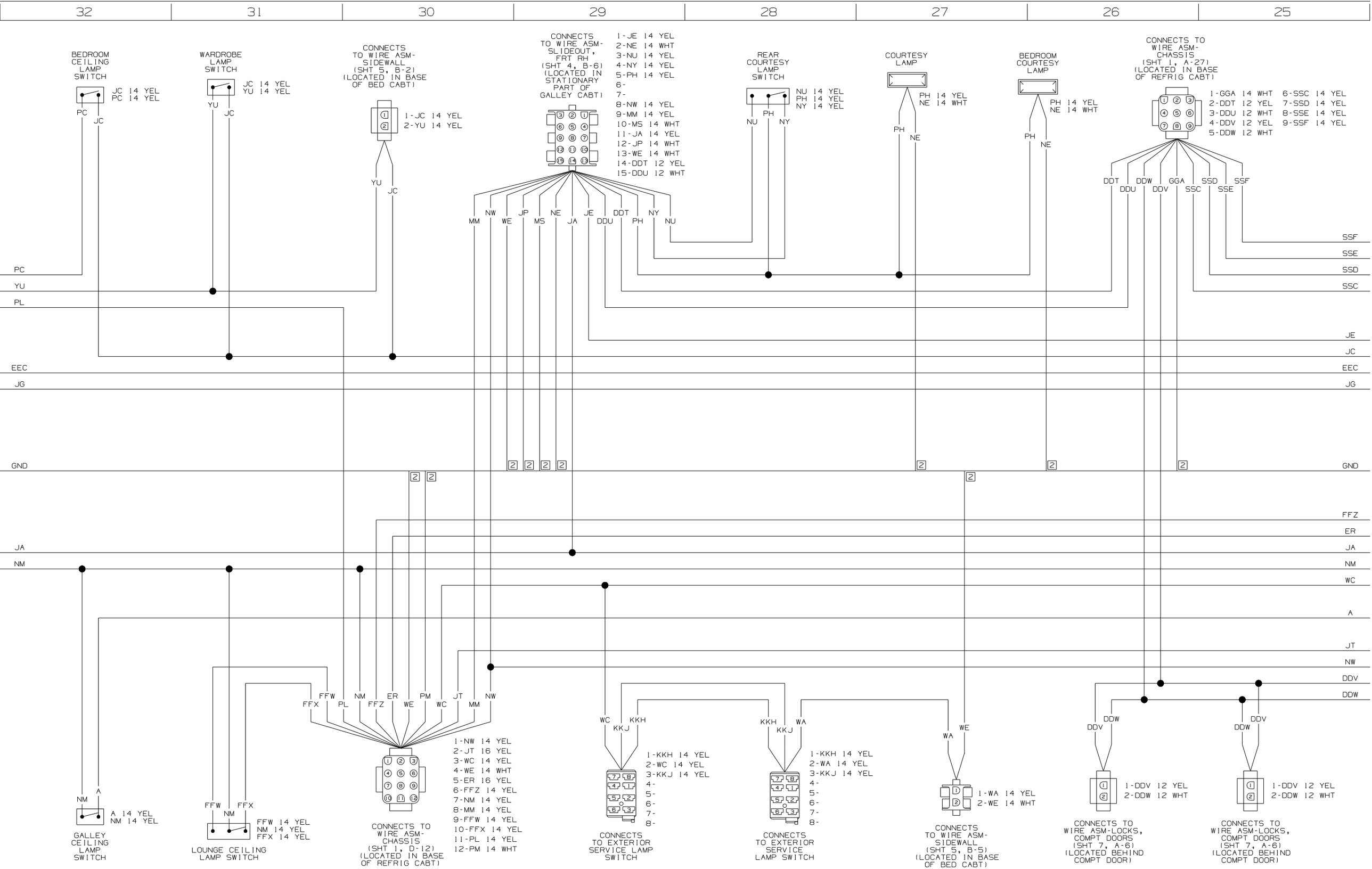
32
31
30
29
28
27
26
25
BEDROOM CEILING LAMP SWITCH
JC 14 YEL
PC 14 YEL
PC
JC
WARDROBE LAMP SWITCH
JC 14 YEL
YU 14 YEL
YU
JC
CONNECTS TO WIRE ASM-SIDEWALL (SHT 5, B-2) (LOCATED IN BASE OF BED CABT)
1-JC 14 YEL
2-YU 14 YEL
YU
JC
CONNECTS TO WIRE ASM-SLIDEOUT, FRT RH (SHT 4, B-6) (LOCATED IN STATIONARY PART OF GALLEY CABT)
1-JE 14 YEL
2-NE 14 WHT
3-NU 14 YEL
4-NY 14 YEL
5-PH 14 YEL
6-
7-
8-NW 14 YEL
9-MM 14 YEL
10-MS 14 WHT
11-JA 14 YEL
12-JP 14 WHT
13-WE 14 WHT
14-DDT 12 YEL
15-DDU 12 WHT
MM NW WE JP MS NE JA JE DDU DDT PH NY NU
REAR COURTESY LAMP SWITCH
NU 14 YEL
PH 14 YEL
NY 14 YEL
NU PH NY
COURTESY LAMP
PH 14 YEL
NE 14 WHT
PH NE
BEDROOM COURTESY LAMP
PH 14 YEL
NE 14 WHT
PH NE
CONNECTS TO WIRE ASM-CHASSIS (SHT 1, A-27) (LOCATED IN BASE OF REFRIG CABT)
1-GGA 14 WHT
2-DDT 12 YEL
3-DDU 12 WHT
4-DDV 12 YEL
5-DDW 12 WHT
6-SSC 14 YEL
7-SSD 14 YEL
8-SSE 14 YEL
9-SSF 14 YEL
DDT DDU DDW DDV GGA SSC SSD SSE SSF
PC
YU
PL
EEC
JG
GND
JA
NM
SSF
SSE
SSD
SSC
JE
JC
EEC
JG
GND
FFZ
ER
JA
NM
WC
A
JT
NW
DDV
DDW
A
NM
A 14 YEL
NM 14 YEL
GALLEY CEILING LAMP SWITCH
FFW FFX
NM
FFW 14 YEL
NM 14 YEL
FFX 14 YEL
LOUNGE CEILING LAMP SWITCH
FFX PL FFW FFZ NM WE ER PM WC JT MM NW
1-NW 14 YEL
2-JT 16 YEL
3-WC 14 YEL
4-WE 14 WHT
5-ER 16 YEL
6-FFZ 14 YEL
7-NM 14 YEL
8-MM 14 YEL
9-FFW 14 YEL
10-FFX 14 YEL
11-PL 14 YEL
12-PM 14 WHT
CONNECTS TO WIRE ASM-CHASSIS (SHT 1, D-12) (LOCATED IN BASE OF REFRIG CABT)
WC KKJ KKH
1-KKH 14 YEL
2-WC 14 YEL
3-KKJ 14 YEL
4-
5-
6-
7-
8-
CONNECTS TO EXTERIOR SERVICE LAMP SWITCH
KKH KKJ WA
1-KKH 14 YEL
2-WA 14 YEL
3-KKJ 14 YEL
4-
5-
6-
7-
8-
CONNECTS TO EXTERIOR SERVICE LAMP SWITCH
WA WE
1-WA 14 YEL
2-WE 14 WHT
CONNECTS TO WIRE ASM-SIDEWALL (SHT 5, B-5) (LOCATED IN BASE OF BED CABT)
DDV DDW
1-DDV 12 YEL
2-DDW 12 WHT
CONNECTS TO WIRE ASM-LOCKS, COMPT DOORS (SHT 7, A-6) (LOCATED BEHIND COMPT DOOR)
DDW DDV
1-DDV 12 YEL
2-DDW 12 WHT
CONNECTS TO WIRE ASM-LOCKS, COMPT DOORS (SHT 7, A-6) (LOCATED BEHIND COMPT DOOR)
DWG NO 158344 S2 F4 REV
32
31
30
29
28
27
26
25

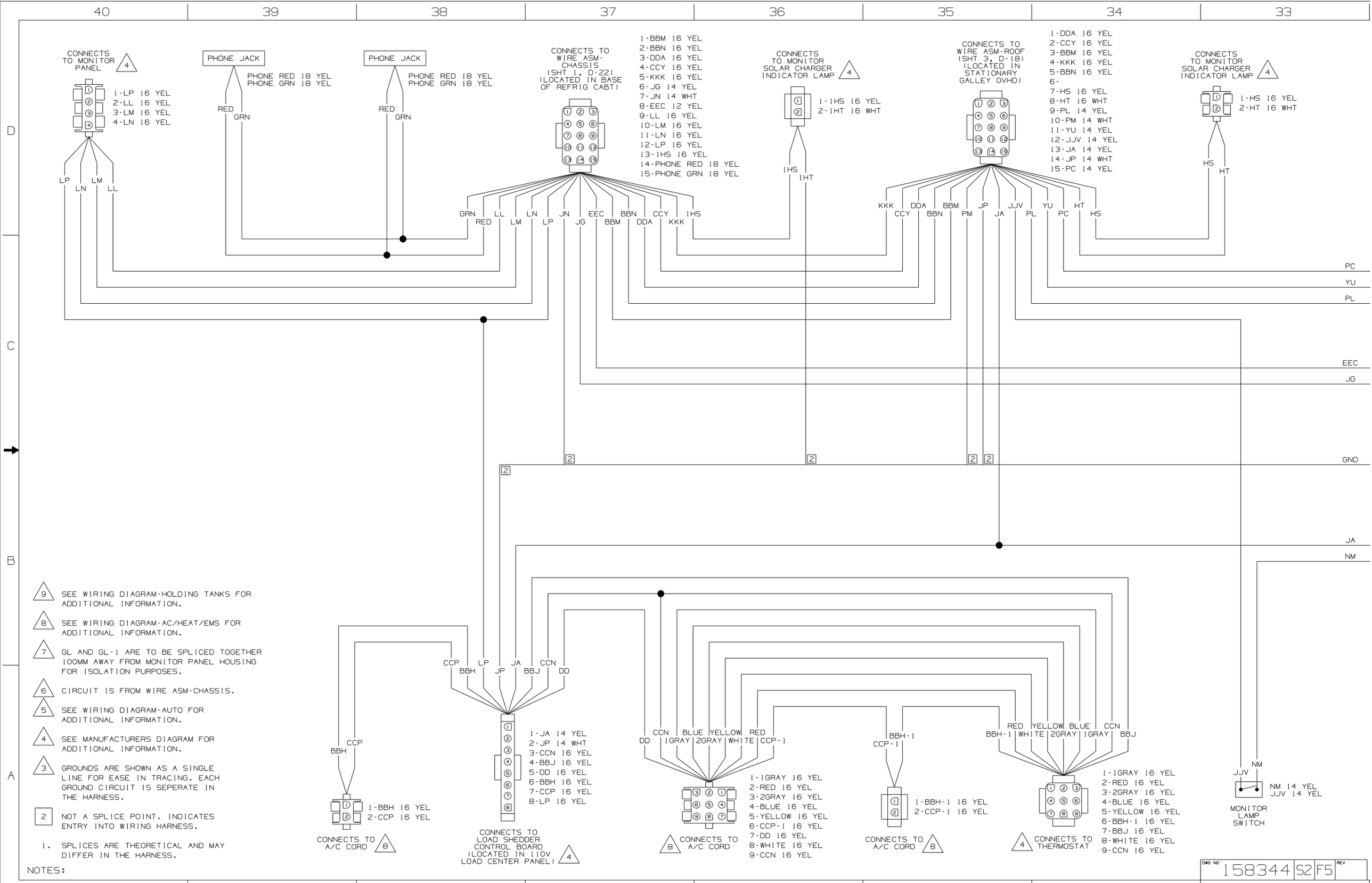
CONNECTS TO MONITOR PANEL 4
1-LP 16 YEL
2-LL 16 YEL
3-LM 16 YEL
4-LN 16 YEL
LP LN LM LL
PHONE JACK
PHONE RED 18 YEL
PHONE GRN 18 YEL
RED GRN
PHONE JACK
PHONE RED 18 YEL
PHONE GRN 18 YEL
RED GRN
CONNECTS TO WIRE ASM-CHASSIS (SHT 1, D-22) (LOCATED IN BASE OF REFRIG CABT)
1-BBM 16 YEL
2-BBN 16 YEL
3-DDA 16 YEL
4-CCY 16 YEL
5-KKK 16 YEL
6-JG 14 YEL
7-JN 14 WHT
8-EEC 12 YEL
9-LL 16 YEL
10-LM 16 YEL
11-LN 16 YEL
12-LP 16 YEL
13-1HS 16 YEL
14-PHONE RED 18 YEL
15-PHONE GRN 18 YEL
GRN RED LL LM LN LP JN JG EEC BBN BBM DDA CCY KKK 1HS
CONNECTS TO MONITOR SOLAR CHARGER INDICATOR LAMP 4
1-1HS 16 YEL
2-1HT 16 WHT
1HS 1HT
CONNECTS TO WIRE ASM-ROOF (SHT 3, D-18) (LOCATED IN STATIONARY GALLEY OVHD)
1-DDA 16 YEL
2-CCY 16 YEL
3-BBM 16 YEL
4-KKK 16 YEL
5-BBN 16 YEL
6-
7-HS 16 YEL
8-HT 16 WHT
9-PL 14 YEL
10-PM 14 WHT
11-YU 14 YEL
12-JJV 14 YEL
13-JA 14 YEL
14-JP 14 WHT
15-PC 14 YEL
KKK CCY DDA BBN BBM PM JP JA JJV PL YU PC HT HS
CONNECTS TO MONITOR SOLAR CHARGER INDICATOR LAMP 4
1-HS 16 YEL
2-HT 16 WHT
HS HT
PC
YU
PL
EEC
JG
GND
JA
NM
9 SEE WIRING DIAGRAM-HOLDING TANKS FOR ADDITIONAL INFORMATION.
8 SEE WIRING DIAGRAM-AC/HEAT/EMS FOR ADDITIONAL INFORMATION.
7 GL AND GL-1 ARE TO BE SPLICED TOGETHER 100MM AWAY FROM MONITOR PANEL HOUSING FOR ISOLATION PURPOSES.
6 CIRCUIT IS FROM WIRE ASM-CHASSIS.
5 SEE WIRING DIAGRAM-AUTO FOR ADDITIONAL INFORMATION.
4 SEE MANUFACTURERS DIAGRAM FOR ADDITIONAL INFORMATION.
3 GROUNDS ARE SHOWN AS A SINGLE LINE FOR EASE IN TRACING. EACH GROUND CIRCUIT IS SEPERATE IN THE HARNESS.
2 NOT A SPLICE POINT. INDICATES ENTRY INTO WIRING HARNESS.
1. SPLICES ARE THEORETICAL AND MAY DIFFER IN THE HARNESS.
NOTES:
CCP BBH
1-BBH 16 YEL
2-CCP 16 YEL
CONNECTS TO A/C CORD 8
CCP BBH LP JP JA BBJ CCN DD
1-JA 14 YEL
2-JP 14 WHT
3-CCN 16 YEL
4-BBJ 16 YEL
5-DD 16 YEL
6-BBH 16 YEL
7-CCP 16 YEL
8-LP 16 YEL
CONNECTS TO LOAD SHEDDER CONTROL BOARD (LOCATED IN 110V LOAD CENTER PANEL) 4
DD CCN 1GRAY BLUE 2GRAY YELLOW WHITE RED CCP-1
1-1GRAY 16 YEL
2-RED 16 YEL
3-2GRAY 16 YEL
4-BLUE 16 YEL
5-YELLOW 16 YEL
6-CCP-1 16 YEL
7-DD 16 YEL
8-WHITE 16 YEL
9-CCN 16 YEL
8 CONNECTS TO A/C CORD
BBH-1 CCP-1
1-BBH-1 16 YEL
2-CCP-1 16 YEL
CONNECTS TO A/C CORD 8
RED BBH-1 YELLOW WHITE BLUE 2GRAY CCN 1GRAY BBJ
1-1GRAY 16 YEL
2-RED 16 YEL
3-2GRAY 16 YEL
4-BLUE 16 YEL
5-YELLOW 16 YEL
6-BBH-1 16 YEL
7-BBJ 16 YEL
8-WHITE 16 YEL
9-CCN 16 YEL
4 CONNECTS TO THERMOSTAT
JJV NM
NM 14 YEL
JJV 14 YEL
MONITOR LAMP SWITCH
DWG NO 158344 S2 F5 REV

DWG NO 158344

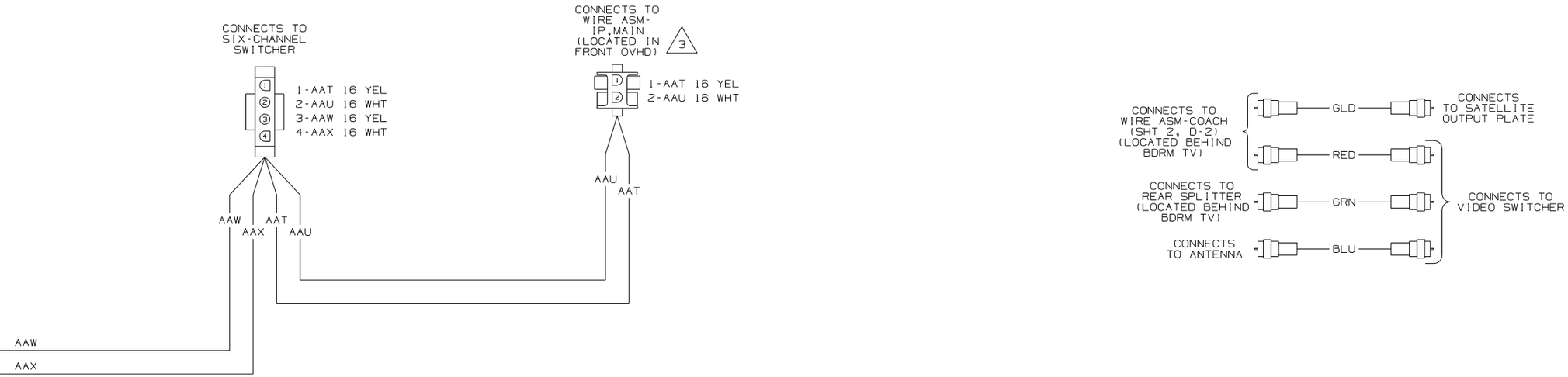

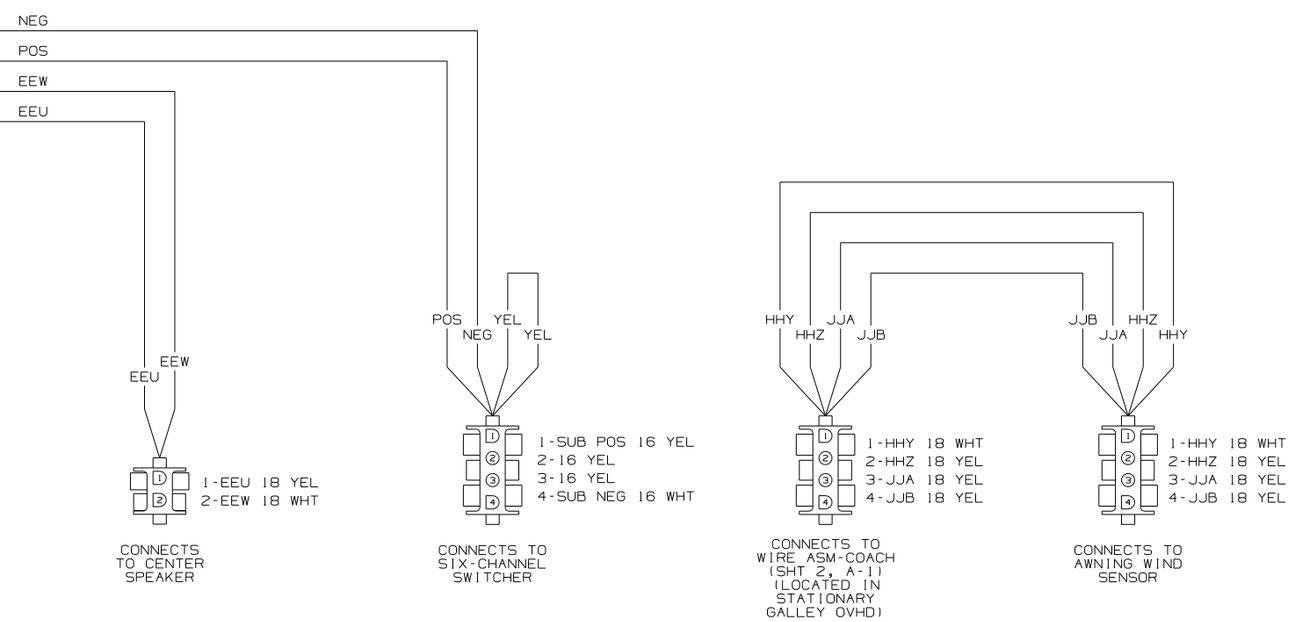

WIRING DIAGRAM-ROOF
(WIRE ASM 158348 REV-D)

FIRST USED	07 P39K
	DO NOT SCALE DRAWING
TITLE:	WIRING DIAGRAM-BODY, 12V
F1 SHEET 3	PART NO 158344 REV

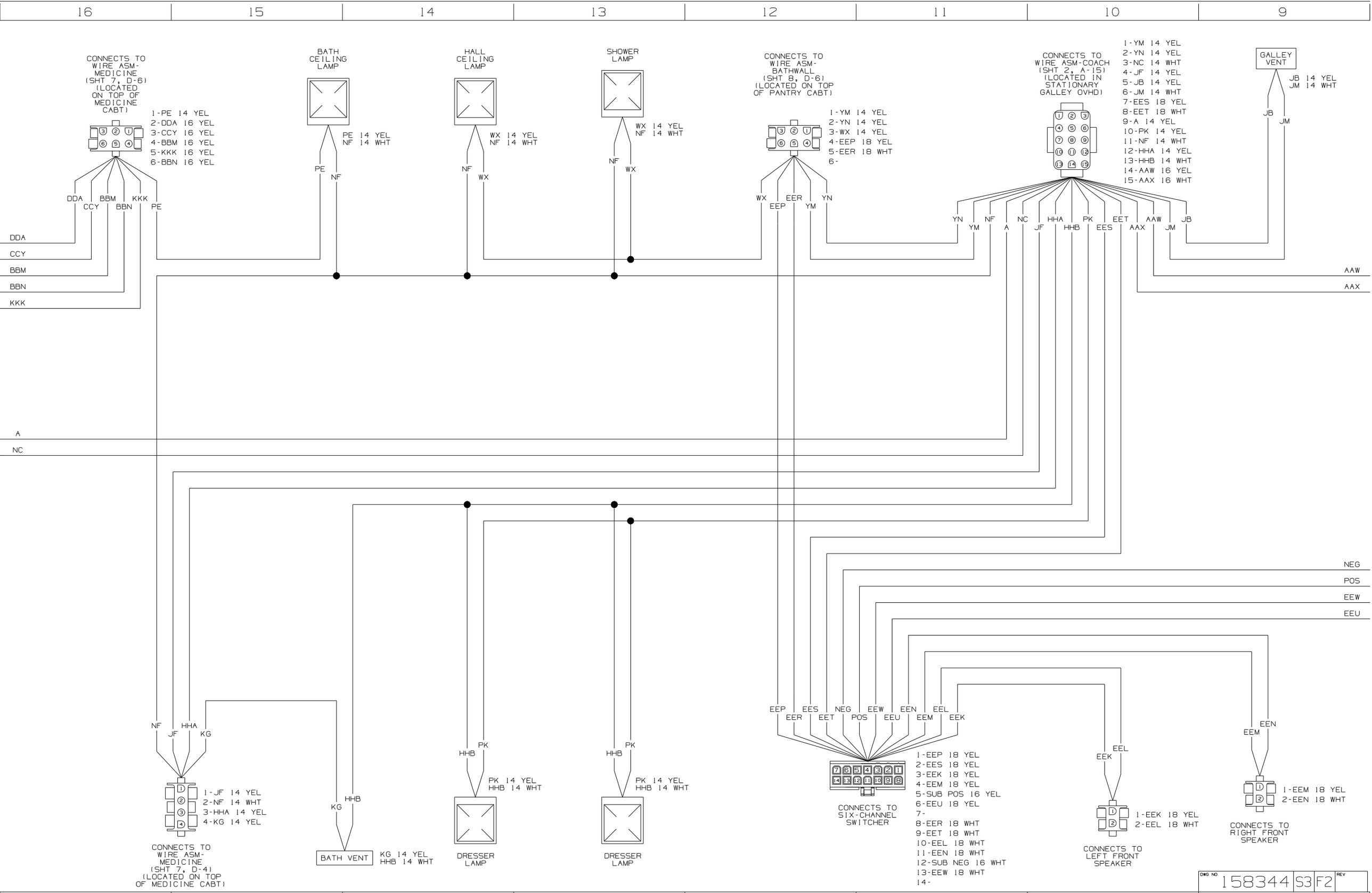
16
15
14
13
12
11
10
9
CONNECTS TO WIRE ASM-MEDICINE (SHT 7, D-6) (LOCATED ON TOP OF MEDICINE CABT)
1-PE 14 YEL
2-DDA 16 YEL
3-CCY 16 YEL
4-BBM 16 YEL
5-KKK 16 YEL
6-BBN 16 YEL
DDA
CCY
BBM
BBN
KKK
PE
BATH CEILING LAMP
PE 14 YEL
NF 14 WHT
PE
NF
HALL CEILING LAMP
WX 14 YEL
NF 14 WHT
NF
WX
SHOWER LAMP
WX 14 YEL
NF 14 WHT
NF
WX
CONNECTS TO WIRE ASM-BATHWALL (SHT 8, D-6) (LOCATED ON TOP OF PANTRY CABT)
1-YM 14 YEL
2-YN 14 YEL
3-WX 14 YEL
4-EEP 18 YEL
5-EER 18 WHT
6-
WX
EEP
EER
YM
YN
CONNECTS TO WIRE ASM-COACH (SHT 2, A-15) (LOCATED IN STATIONARY GALLEY OVHD)
1-YM 14 YEL
2-YN 14 YEL
3-NC 14 WHT
4-JF 14 YEL
5-JB 14 YEL
6-JM 14 WHT
7-EES 18 YEL
8-EET 18 WHT
9-A 14 YEL
10-PK 14 YEL
11-NF 14 WHT
12-HHA 14 YEL
13-HHB 14 WHT
14-AAW 16 YEL
15-AAX 16 WHT
YN
YM
NF
A
NC
JF
HHA
HHB
PK
EES
EET
AAW
AAX
JM
JB
GALLEY VENT
JB 14 YEL
JM 14 WHT
JB
JM
AAW
AAX
A
NC
NEG
POS
EEW
EEU
NF
JF
HHA
KG
1-JF 14 YEL
2-NF 14 WHT
3-HHA 14 YEL
4-KG 14 YEL
CONNECTS TO WIRE ASM-MEDICINE (SHT 7, D-4) (LOCATED ON TOP OF MEDICINE CABT)
KG
HHB
BATH VENT
KG 14 YEL
HHB 14 WHT
HHB
PK
PK 14 YEL
HHB 14 WHT
DRESSER LAMP
HHB
PK
PK 14 YEL
HHB 14 WHT
DRESSER LAMP
EEP
EER
EES
EET
NEG
POS
EEW
EEU
EEN
EEM
EEL
EEK
CONNECTS TO SIX-CHANNEL SWITCHER
1-EEP 18 YEL
2-EES 18 YEL
3-EEK 18 YEL
4-EEM 18 YEL
5-SUB POS 16 YEL
6-EEU 18 YEL
7-
8-EER 18 WHT
9-EET 18 WHT
10-EEL 18 WHT
11-EEN 18 WHT
12-SUB NEG 16 WHT
13-EEW 18 WHT
14-
EEL
EEK
1-EEK 18 YEL
2-EEL 18 WHT
CONNECTS TO LEFT FRONT SPEAKER
EEN
EEM
1-EEM 18 YEL
2-EEN 18 WHT
CONNECTS TO RIGHT FRONT SPEAKER
DWG NO 158344 S3 F2 REV
16
15
14
13
12
11
10
9
2/13/2007 49

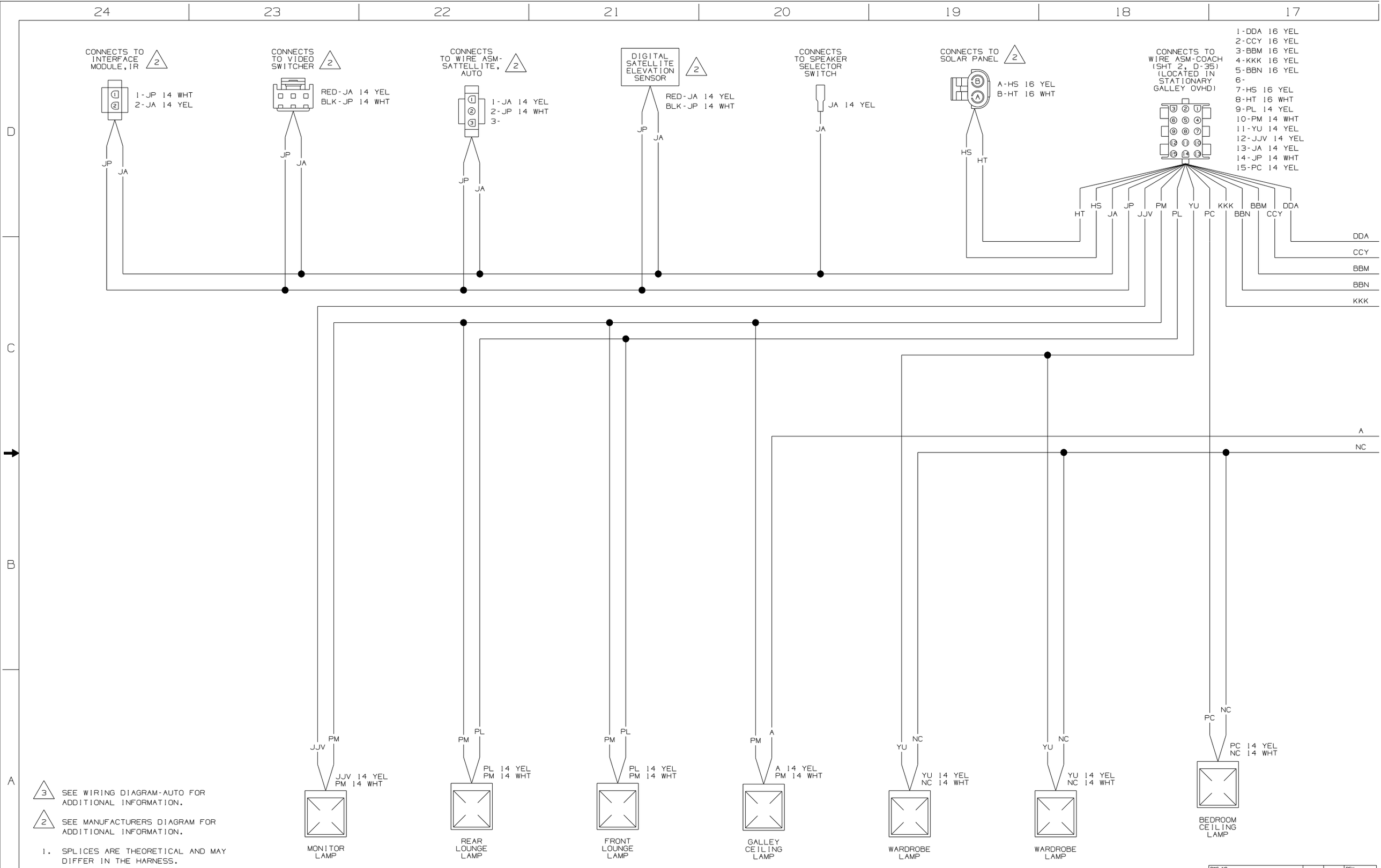
CONNECTS TO INTERFACE MODULE, IR
1-JP 14 WHT
2-JA 14 YEL
JP
JA
CONNECTS TO VIDEO SWITCHER
RED-JA 14 YEL
BLK-JP 14 WHT
JP
JA
CONNECTS TO WIRE ASM-SATTELLITE, AUTO
1-JA 14 YEL
2-JP 14 WHT
3-
JP
JA
DIGITAL SATELLITE ELEVATION SENSOR
RED-JA 14 YEL
BLK-JP 14 WHT
JP
JA
CONNECTS TO SPEAKER SELECTOR SWITCH
JA 14 YEL
JA
CONNECTS TO SOLAR PANEL
A-HS 16 YEL
B-HT 16 WHT
HS
HT
CONNECTS TO WIRE ASM-COACH (SHT 2, D-35) (LOCATED IN STATIONARY GALLEY OVHD)
1-DDA 16 YEL
2-CCY 16 YEL
3-BBM 16 YEL
4-KKK 16 YEL
5-BBN 16 YEL
6-
7-HS 16 YEL
8-HT 16 WHT
9-PL 14 YEL
10-PM 14 WHT
11-YU 14 YEL
12-JJV 14 YEL
13-JA 14 YEL
14-JP 14 WHT
15-PC 14 YEL
HT HS JA JP JJV PM PL YU PC KKK BBN BBM CCY DDA
DDA
CCY
BBM
BBN
KKK
A
NC
JJV PM
JJV 14 YEL
PM 14 WHT
MONITOR LAMP
PM PL
PL 14 YEL
PM 14 WHT
REAR LOUNGE LAMP
PM PL
PL 14 YEL
PM 14 WHT
FRONT LOUNGE LAMP
PM A
A 14 YEL
PM 14 WHT
GALLEY CEILING LAMP
YU NC
YU 14 YEL
NC 14 WHT
WARDROBE LAMP
YU NC
YU 14 YEL
NC 14 WHT
WARDROBE LAMP
PC NC
PC 14 YEL
NC 14 WHT
BEDROOM CEILING LAMP
3 SEE WIRING DIAGRAM-AUTO FOR ADDITIONAL INFORMATION.
2 SEE MANUFACTURERS DIAGRAM FOR ADDITIONAL INFORMATION.
1. SPLICES ARE THEORETICAL AND MAY DIFFER IN THE HARNESS.
NOTES:
DWG NO 158344 S3 F3 REV

DWG NO 158344

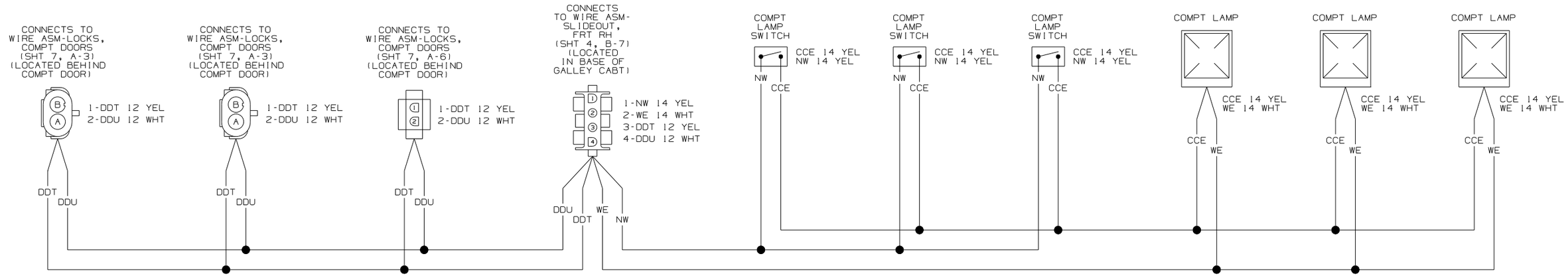

WIRING DIAGRAM-SLIDEOUT COMPT
(WIRE ASM 154424 REV-E)

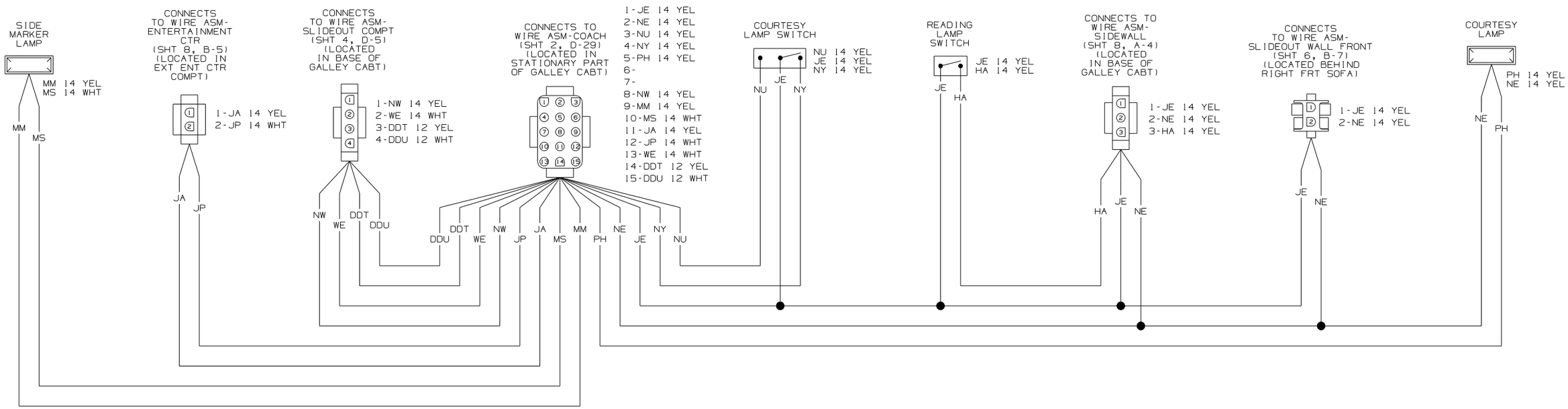

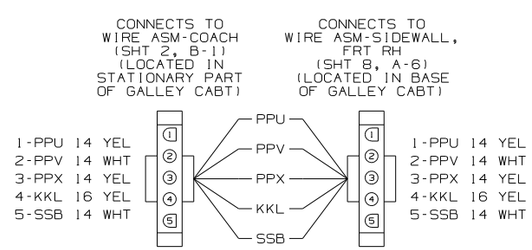

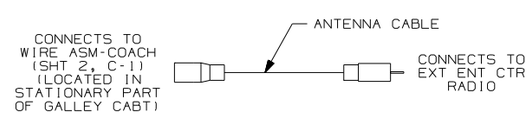

WIRING DIAGRAM-SLIDEOUT,FRT RH
(WIRE ASM 158527 REV-C)

NOTES:

1. SPLICES ARE THEORETICAL AND MAY DIFFER IN THE HARNESS.

FIRST USED	07 P39K
DO NOT SCALE DRAWING	
TITLE: WIRING DIAGRAM-BODY,12V	
SHEET 4	PART NO 158344 REV

DWG NO 158344

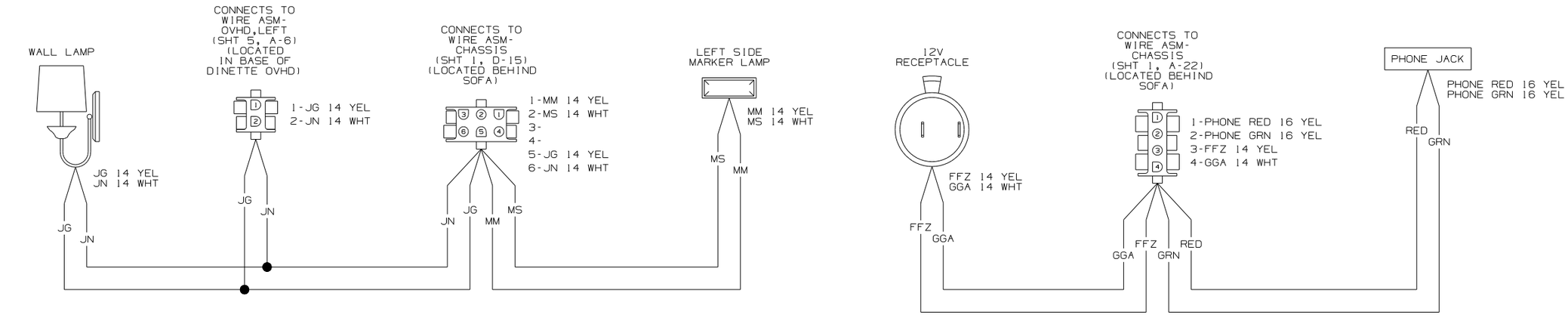

WIRING DIAGRAM-SIDEWALL,LEFT
(WIRE ASM 158537 REV-C)

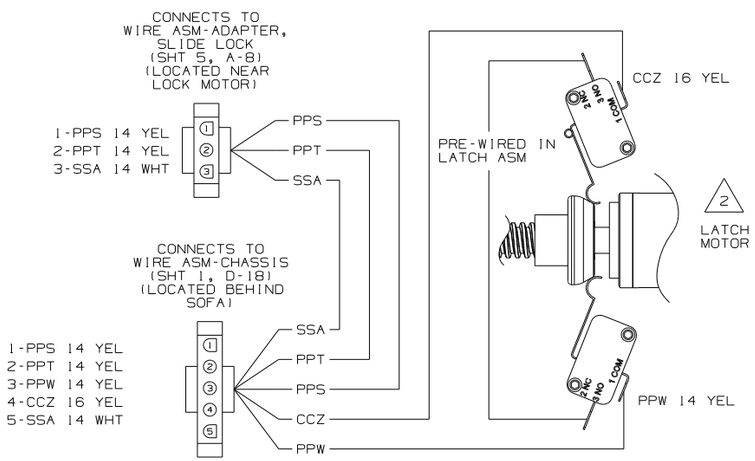

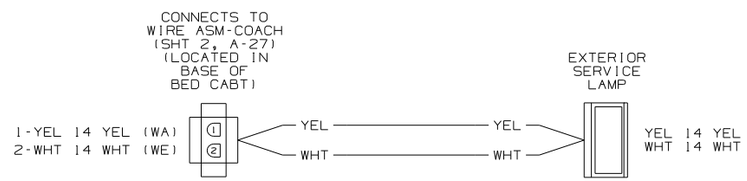

WIRING DIAGRAM-EXTENSION,2 PIN
(WIRE ASM 133572-01 REV-G)

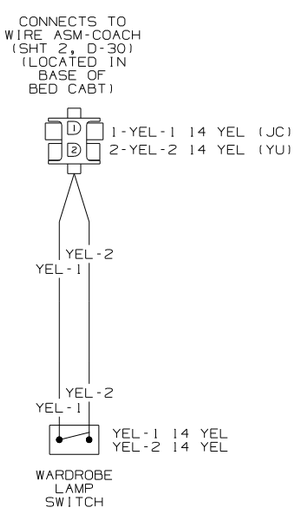

WIRING DIAGRAM-EXTENSION,2 PIN
(WIRE ASM 147579-01 REV-A)

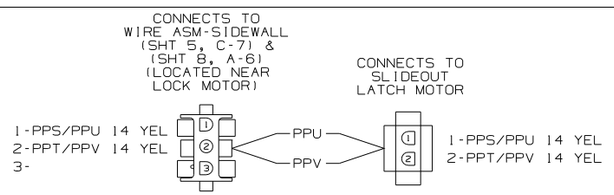

WIRING DIAGRAM ADAPTER, SLIDE LOCK
(WIRE ASM 158978-01 REV-B)

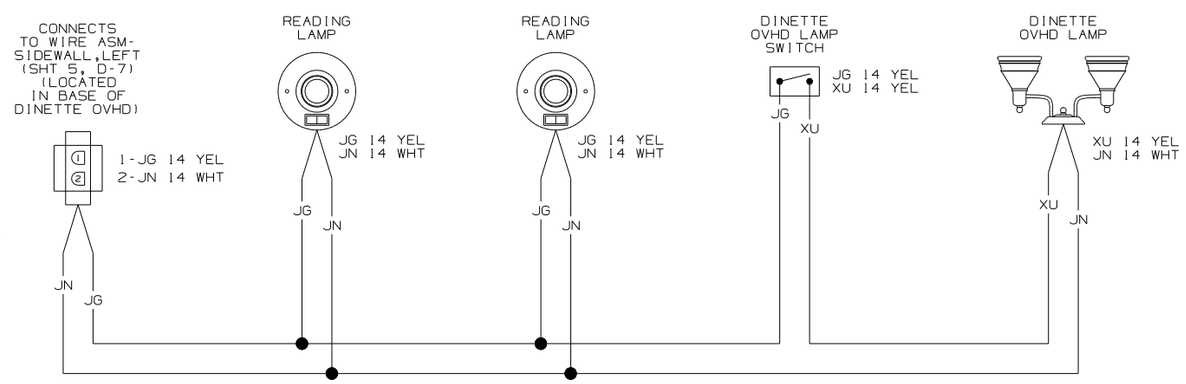

WIRING DIAGRAM-OVHD,LEFT
(WIRE ASM 153910-02 REV-C)

2. SEE MANUFACTURERS DIAGRAM FOR ADDITIONAL INFORMATION.

1. SPLICES ARE THEORETICAL AND MAY DIFFER IN THE HARNESS.

NOTES:

FIRST USED	07 P39K
DO NOT SCALE DRAWING	
TITLE: WIRING DIAGRAM-BODY,12V	
SHEET 5	PART NO 158344 REV

DWG NO 158344

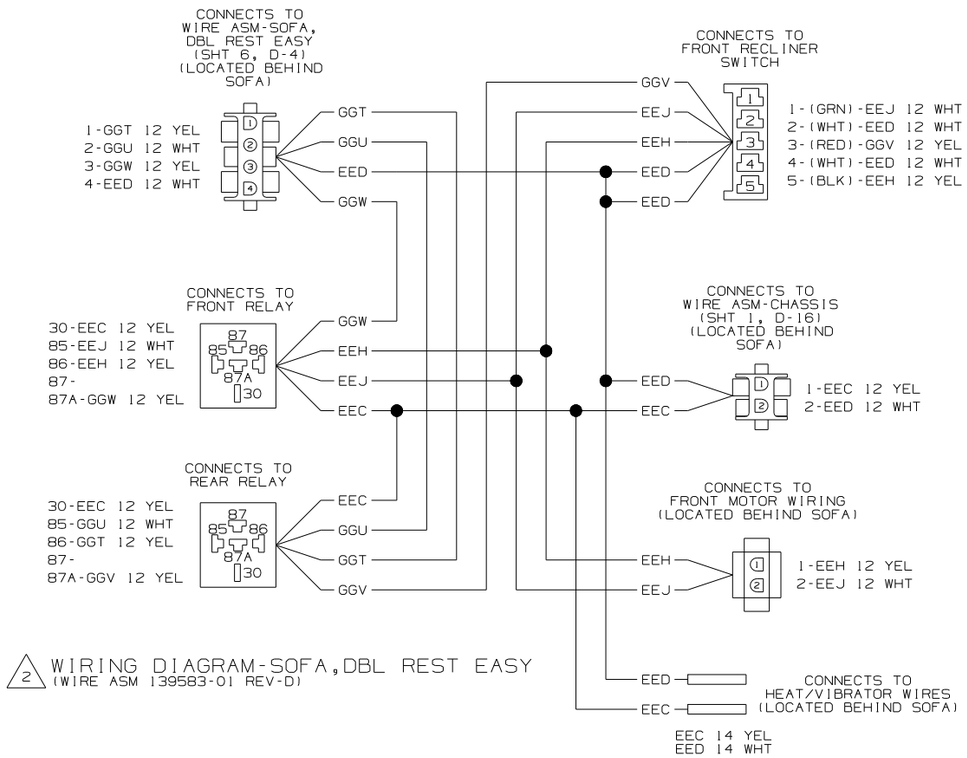

2 WIRING DIAGRAM-SOFA,DBL REST EASY
(WIRE ASM 139583-01 REV-D)

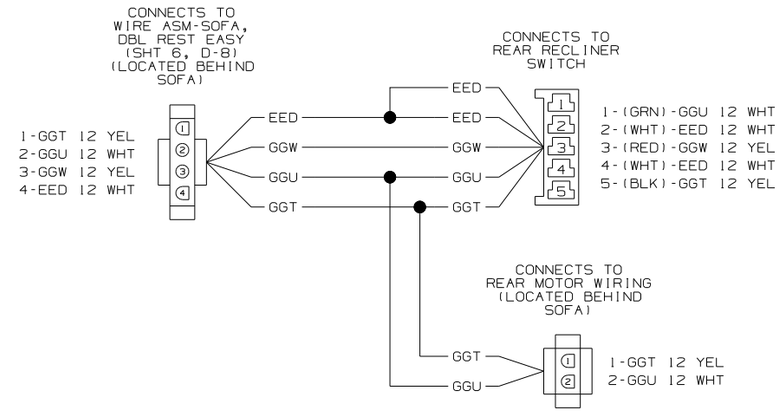

2 WIRING DIAGRAM-SOFA,DBL REST EASY
(WIRE ASM 139583-02 REV-D)

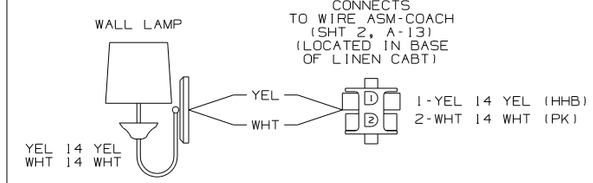

WIRING DIAGRAM-EXTENSION,2 PIN
(WIRE ASM 149130-01 REV-C)

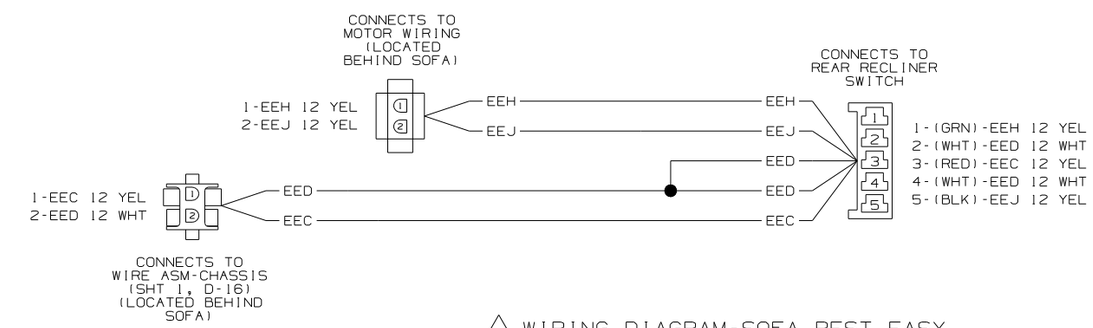

2 WIRING DIAGRAM-SOFA,REST EASY
(WIRE ASM 136028-01 REV-A)

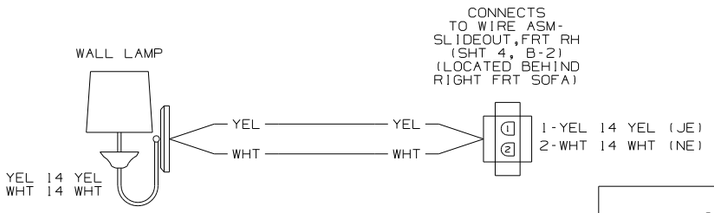

WIRING DIAGRAM-EXTENSION,2 PIN
(WIRE ASM 133572-01 REV-G)

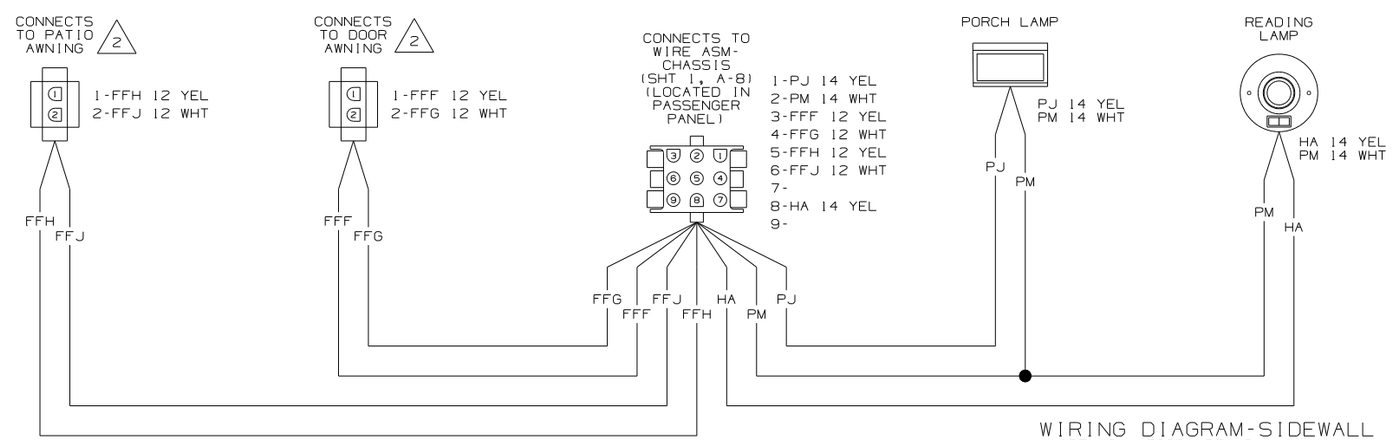

WIRING DIAGRAM-SIDEWALL
(WIRE ASM 156294 REV-B)

2 SEE MANUFACTURERS DIAGRAM FOR ADDITIONAL INFORMATION.

1. SPLICES ARE THEORETICAL AND MAY DIFFER IN THE HARNESS.

NOTES:

FIRST USED	07 P39K
DO NOT SCALE DRAWING	
TITLE: WIRING DIAGRAM-BODY,12V	
SHEET 6	PART NO 158344 REV

DWG NO 158344

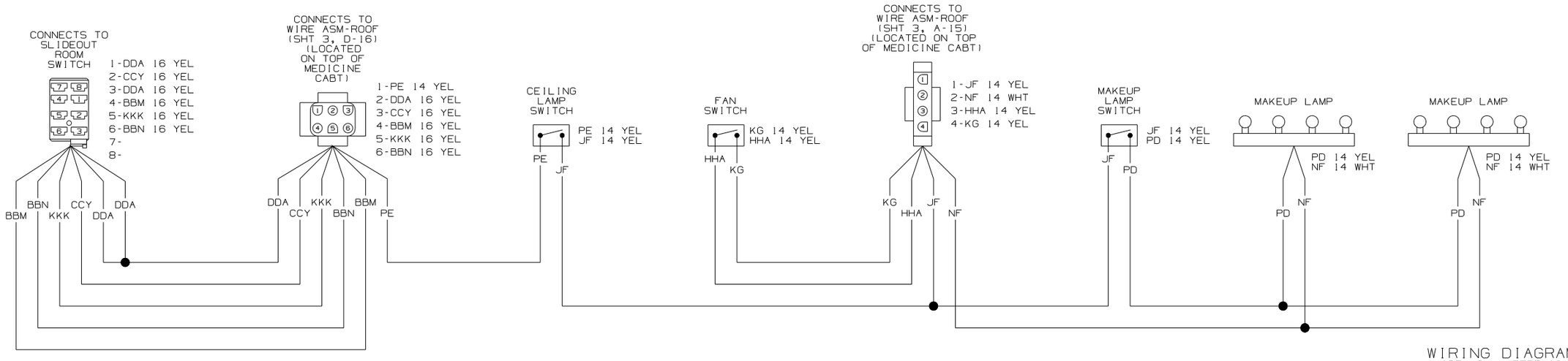

WIRING DIAGRAM-MEDICINE
(WIRE ASM 147555-03 REV-D)

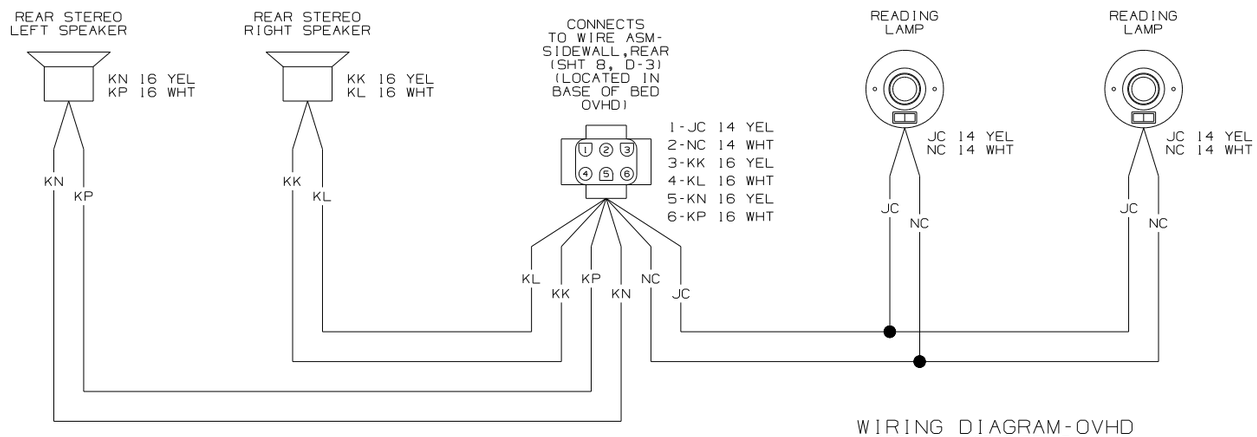

WIRING DIAGRAM-OVHD
(WIRE ASM 140727 REV-E)

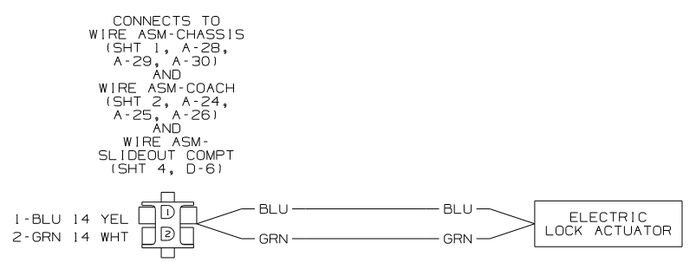

WIRING DIAGRAM-LOCKS,COMPT DOORS
(WIRE ASM 135834-02 REV-J)

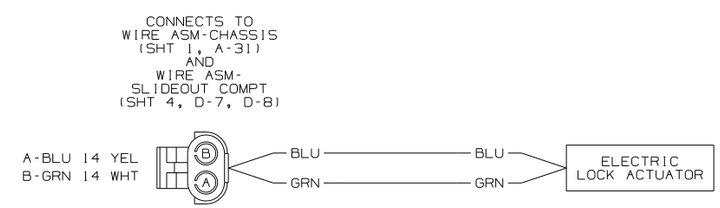

WIRING DIAGRAM-LOCKS,COMPT DOORS
(WIRE ASM 135834-03 REV-J)

NOTES:

2. SEE MANUFACTURERS DIAGRAM FOR ADDITIONAL INFORMATION.

1. SPLICES ARE THEORETICAL AND MAY DIFFER IN THE HARNESS.

FIRST USED	07 P39K
DO NOT SCALE DRAWING	
TITLE: WIRING DIAGRAM-BODY, 12V	
SHEET 7	PART NO 158344 REV

DWG NO 158344

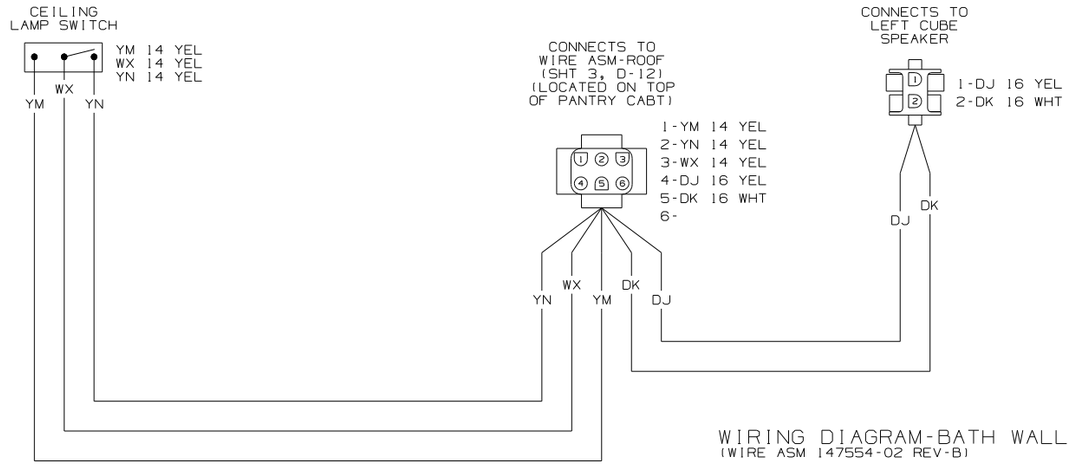

WIRING DIAGRAM-BATH WALL
(WIRE ASM 147554-02 REV-B)

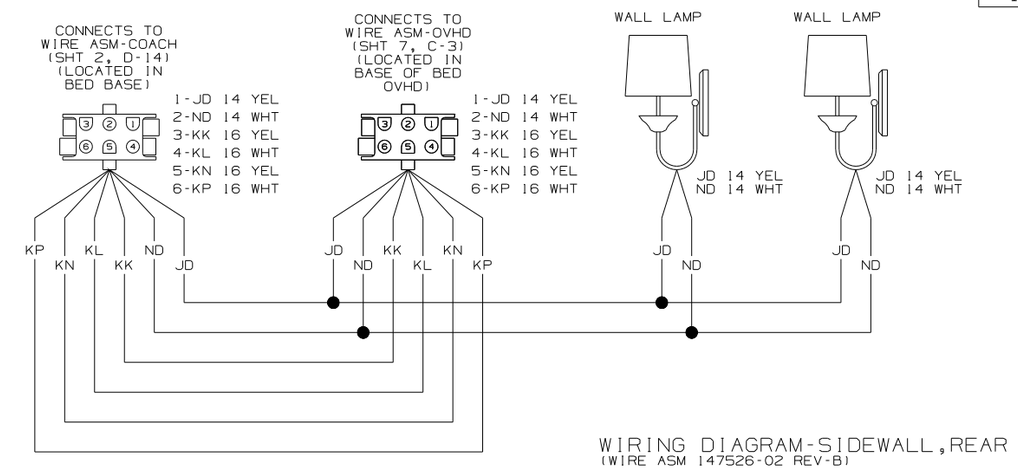

WIRING DIAGRAM-SIDEWALL,REAR
(WIRE ASM 147526-02 REV-B)

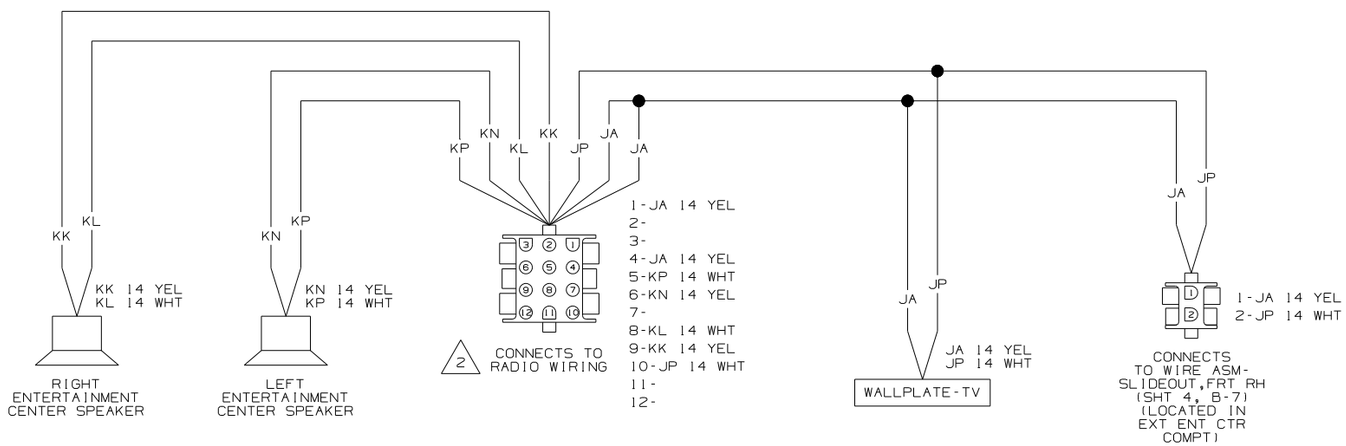

WIRING DIAGRAM-ENTERTAINMENT CTR
(WIRE ASM 125853-04 REV-L)

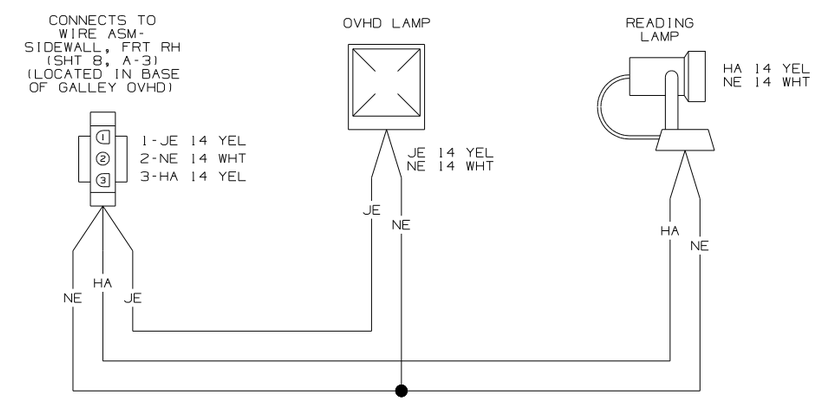

WIRING DIAGRAM-OVHD
(WIRE ASM 153907 REV-A)

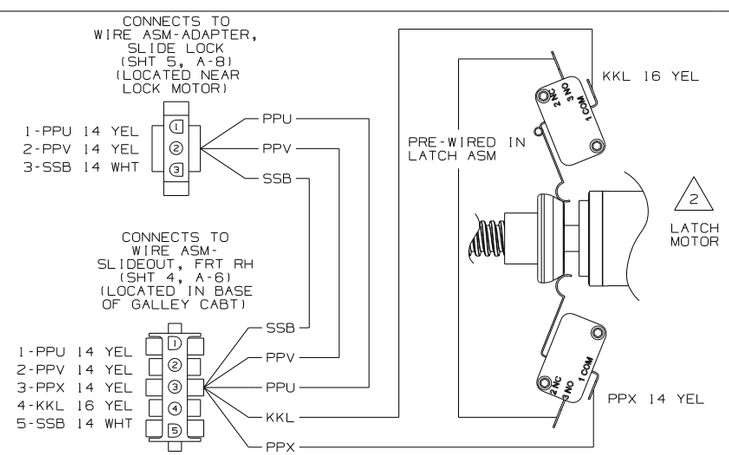

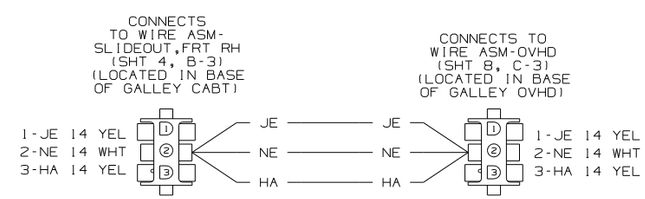

WIRING DIAGRAM-SIDEWALL, FRT RH
(WIRE ASM 158531 REV-B)

2 SEE MANUFACTURERS DIAGRAM FOR ADDITIONAL INFORMATION.

1. SPLICES ARE THEORETICAL AND MAY DIFFER IN THE HARNESS.

NOTES:

FIRST USED	07 P39K
	DO NOT SCALE DRAWING
TITLE:	WIRING DIAGRAM-BODY,12V
SHEET 8	PART NO 158344 REV

DRAWING NO.	FEATURE
155923-01	WIN
155923-02	ITA

RELEASE	REV A	DATE	DWG NO 155923

REV	ZONE	REVISION RECORD	DATE	DFTR-ORIG

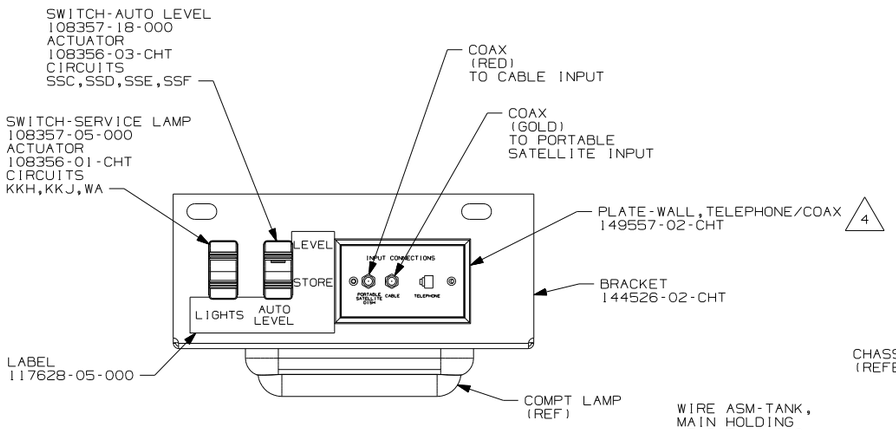

DETAIL AA

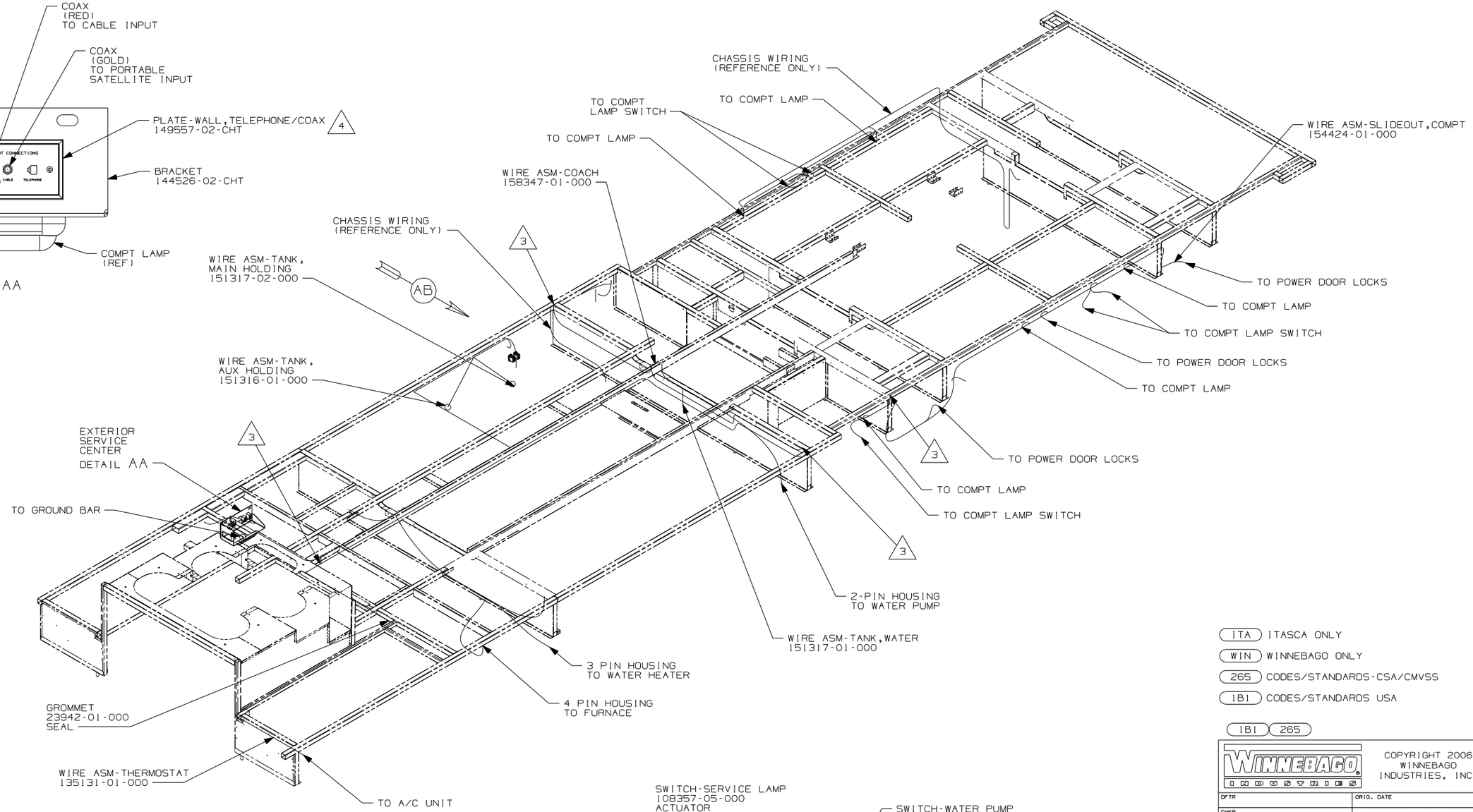

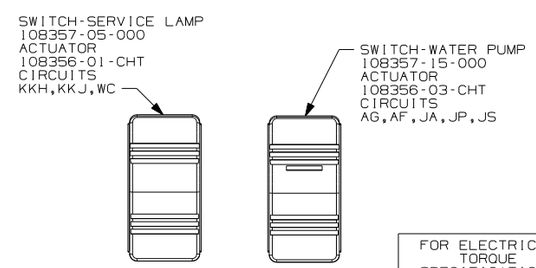

VIEW AB

FOR ELECTRICAL TORQUE SPECIFICATIONS SEE DWG NO. 128783-01-000

X-X FOR ELECTRICAL CALLOUTS SEE DWG NO. 121339-01-000

ITA ITASCA ONLY

WIN WINNEBAGO ONLY

265 CODES/STANDARDS-CSA/CMVSS

IBI CODES/STANDARDS USA

IBI 265

4 CONNECT TELEPHONE WIRES TO MATCHING COLORS ON PLATE-TELEPHONE.

3 WIRE PASSES THROUGH FLOOR AT THIS POINT.

2. CLAMP TO FLOOR SUPPORT TUBES AS NECESSARY WITH CLAMP 10497-01-000.

1. ALL WIRES TO BE SECURED WITH CLAMP 10495 OR 10497 OR WIRE TIE 8343 OR 108046 EVERY 600MM, USE SCREW G67-XX-XXX OR G56-XX-XXX AS APPROPRIATE FOR INTALLATION.

NOTES:

WINNEBAGO INDUSTRIES

DFTR	ORIG. DATE
CHKR	ALL DIMENSIONS ARE IN MILLIMETERS
P.E.	
M.E.	FIRST USED 07 P39K
DSNR	

UNSPECIFIED TOLERANCES ARE:

WHOLE DIM (X)	:	3
ONE-PLACE (X.X)	:	1.5
TWO-PLACE (X.XX)	:	0.50
ANGLE	:	1°

MATERIAL:

THIRD ANGLE PROJECTION

DO NOT SCALE DRAWING

TITLE: WIRING INSTL-BODY,12V

SHEET 1 OF 7 | PART NO 155923 | REV

DWG NO 155923

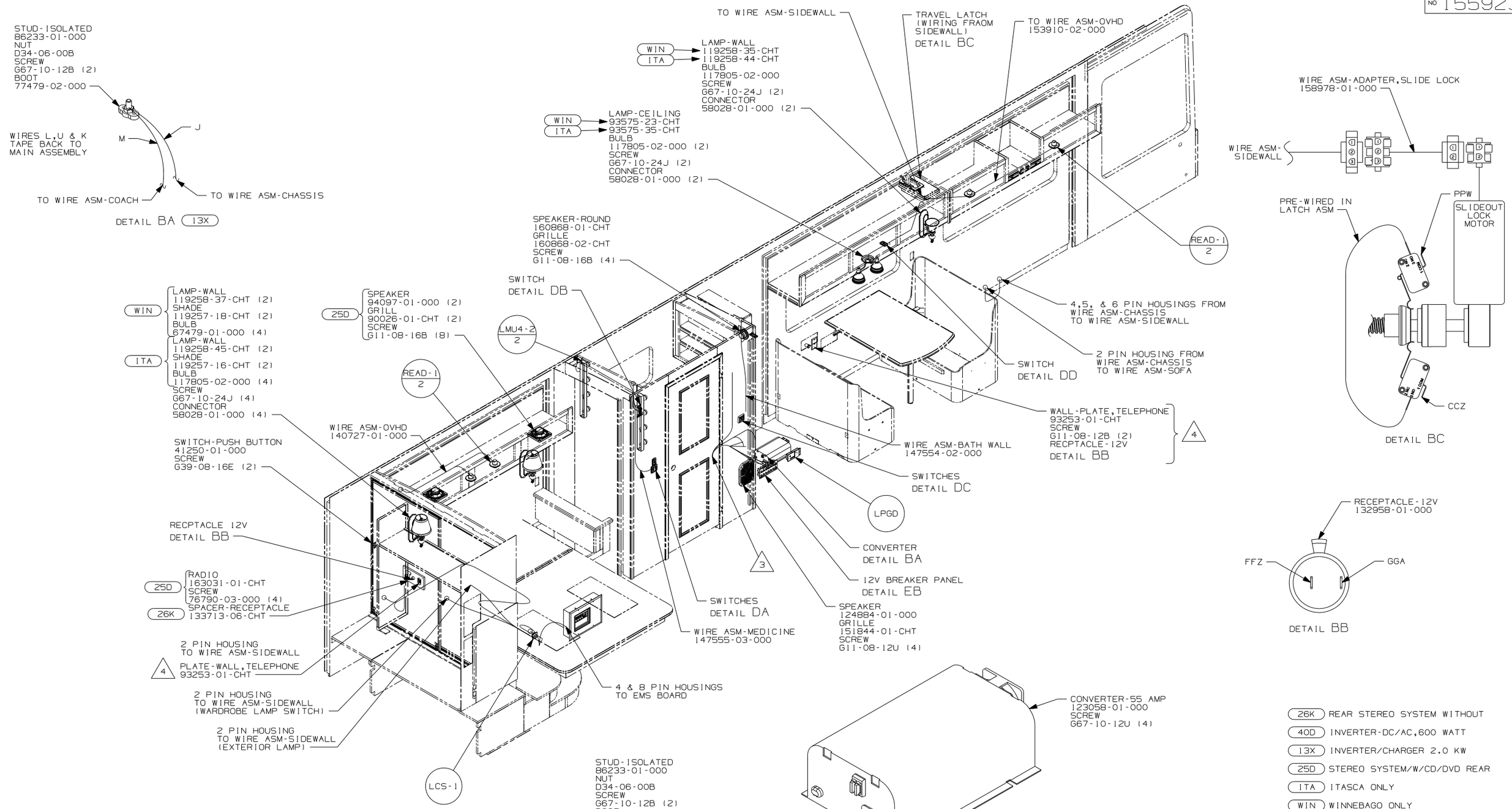

26K REAR STEREO SYSTEM WITHOUT
40D INVERTER-DC/AC,600 WATT
13X INVERTER/CHARGER 2.0 KW
25D STEREO SYSTEM/W/CD/DVD REAR
ITA ITASCA ONLY
WIN WINNEBAGO ONLY
265 CODES/STANDARDS-CSA/CMVSS
IBI CODES/STANDARDS USA

4 CONNECT TELEPHONE WIRES TO MATCHING COLORS ON PLATE-TELEPHONE.

3 WIRE PASSES THROUGH FLOOR AT THIS POINT.

2. SEE WIRING DIAGRAM-BODY,12V FOR ADDITIONAL INFORMATION.

1. ALL WIRES TO BE SECURED WITH CLAMP 10495 OR 10497 OR WIRE TIE 8343 OR 108046 EVERY 600MM, USE SCREW G67-XX-XXX OR G56-XX-XXX AS APPROPRIATE FOR INTALLATION.

NOTES:

FOR ELECTRICAL TORQUE SPECIFICATIONS SEE DWG NO. 128783-01-000

X-X FOR ELECTRICAL CALLOUTS SEE DWG NO. 121339-01-000

IBI 265

FIRST USED 07 P39K

DO NOT SCALE DRAWING

TITLE: WIRING INSTL-BODY,12V

SHEET 2 PART NO 155923 REV

DWG NO 155923

WIN — LAMP-WALL 119258-35-CHT
ITA — 119258-44-CHT
BULB 117805-02-000
SCREW G67-10-24J (2)
CONNECTOR 58028-01-000 (2)

TRAVEL LATCH (WIRING FROM SIDEWALL) DETAIL CE

LIGHT-DESIGNER 128786-02-CHT
SCREW G67-08-12J (2)
CONNECTOR 58028-01-000 (2)

WIRE ASM-OVHD 153907-01-000

L02-2

TO WIRE ASM-SIDEWALL

SPEAKER-ROUND 160868-01-CHT
GRILLE 160868-02-CHT
SCREW G11-08-16B (4)

15 PIN HSGS (2)
4 PIN HSG TO ROOF

JP ANTENNA GRND

SWITCH DETAIL DL

THERMOSTAT-A/C & FURNACE 105620-18-000
GASKET-THERMOSTAT 134588-09-000 (7)
SCREW G13-07-12B (2)

WIRE ASM-ADAPTER,SLIDE LOCK 158978-01-000

WIRE ASM-SIDEWALL

PPW

SLIDEOUT LOCK MOTOR

PRE-WIRED IN LATCH ASM

CCZ

THERMOSTAT WIRING

3 PIN HOUSING

9 PIN HOUSINGS

WIRE ASM-COACH

WIRE ASM-THERMOSTAT

2 PIN HOUSING

DETAIL CB

EA

DETAIL CC

TWO PIN HSG TO WIRE ASM IN END WALL

HAL

SWITCH DETAIL DF

SWITCH DETAIL DG

SWITCHES DETAIL DH

SWITCH DETAIL DJ

SWITCHES DETAIL DK

RCA & COAX TO TV DETAIL CD

RED & YEL COAX TO ROOF DETAIL CA

SWITCHES DETAIL DE

MONITOR PANEL 133004-05-CHT
SCREW G11-08-08U (6)

4 & 15 PIN HSGS TO MONITOR PANEL
4 PIN HSG TO LOAD METER
3 & 9 PIN HSGS TO THEMOSTAT
DETAIL CB

LCS-1

ENT CTR COMPL 144818-05-000

1E3 — PANEL-MONITOR EMS 127002-10-000
SCREW G13-06-061 (2)

ADAPTOR 82134-01-000 FOR YEL COAX SLIDEOUT TO COACH CONNECTION

WIRE ASM-SLIDEOUT 158527-01-000

MM,MS TO SIDEMARKER LIGHT

LCS-1

2 PIN HSG TO SIDEWALL — 43W

3

3

13X — REMOTE PANEL INVERTER/CHARGER 148254-05-000 (6)
CABLE ASM-MODULATOR JACK 50' 148254-03-000
CONDUIT 41953-09-000 (7000)

40D — REMOTE PANEL INVERTER/CHARGER 154511-02-000
CABLE ASM-MODULATOR JACK 50' 148254-03-000
CONDUIT 41953-09-000 (7000)

SWITCH-PUSH BUTTON 41250-01-000
SCREW G39-08-16E (2)

GOLD FROM ROOF — ADAPTOR 82134-01-000 (2) — GOLD FROM COACH

RED FROM ROOF — RED FROM COACH

GRN FROM ROOF — SPLITTER 86756-01-000
SCREW G11-08-12B (2)
COAX CABLE 87105-01-012
YEL FROM COACH — TO TV

DETAIL CA

RCA CABLE FROM ROOF

COAX FROM SPLITTER

YEL

WHT

RED

DETAIL CD

ROUTE WIRES THRU HOLE

JAMB-DOOR

GROMMET 8386-01-000

5

4

SWITCH/MAGNET-STEP, ELECTRIC 116995-03-000
SCREW G11-06-08B (4)

DETAIL CC

LAMP-WALL 119258-37-CHT (2)
SHADE 119257-18-CHT (2)
BULB 67479-01-000 (4)
WIN 43W

LAMP-WALL 119258-45-CHT (2)
SHADE 119257-16-CHT (2)
BULB 117805-02-000 (4)
ITA 43W

SCREW G67-10-24J (4)
CONNECTOR 58028-01-000 (4)

43W	CABINET-LAVATORY
40D	INVERTER-DC/AC,600 WATT
13X	INVERTER/CHARGER 2.0 KW
1E3	ENERGY MANAGEMENT SYSTEM
ITA	ITASCA ONLY
WIN	WINNEBAGO ONLY
265	CODES/STANDARDS-CSA/CMVSS
1B1	CODES/STANDARDS USA

7 INSTALL GASKET ON BACK SIDE OF ONE PLACE AFTER INSTALLATION OF THERMOSTAT, MAKING SURE THAT THE GASKET COVERS AND SEALS THE HOLE THAT THE WIRES PASS THROUGH.

6 CONNECT CIRCUIT WB FROM COACH WIRING TO RED WIRE ON REMOTE PANEL.

5 MOUNT SWITCH AND SPACER TO BLOCK ON JAMB ADJUST HEIGHT TO MATCH MAGNET.

4 MOUNT MAGNET USING PILOT HOLES IN SCREEN DOOR FRAME. MOUNT WITH MAGNET TOWARD SWITCH.

3 WIRE PASSES THROUGH FLOOR AT THIS POINT.

2. SEE WIRING DIAGRAM-BODY,12V FOR ADDITIONAL INFORMATION.

1. ALL WIRES TO BE SECURED WITH CLAMP 10495 OR 10497 OR WIRE TIE 8343 OR 108046 EVERY 600MM, USE SCREW G67-XX-XXX OR G56-XX-XXX AS APPROPRIATE FOR INTALLATION.

NOTES:

FOR ELECTRICAL TORQUE SPECIFICATIONS SEE DWG NO. 128783-01-000

X-X — FOR ELECTRICAL CALLOUTS SEE DWG NO. 121339-01-000

1B1 265

FIRST USED 07 P39K

DO NOT SCALE DRAWING

TITLE: WIRING INSTL-BODY,12V

SHEET 3 — PART NO 155923 — REV

DWG NO 155923

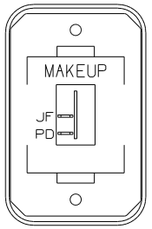

SWITCH-ROCKER
135740-01-CHT
SWITCH-BASE
135741-01-CHT
SWITCH-BEZEL
135742-08-CHT
SCREW
G11-08-08U (2)

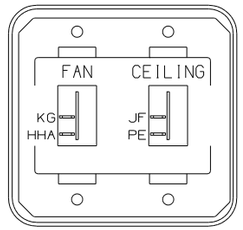

SWITCH-ROCKER
135740-01-CHT (2)
SWITCH-BASE
135741-02-CHT
SWITCH-BEZEL
135742-33-CHT
SCREW
G11-08-08U (4)

DETAIL DA

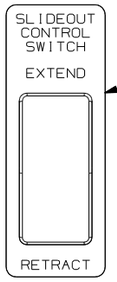

PLATE-SWITCH
144363-09-CHT
SWITCH
108357-06-000
ACTUATOR
108356-01-CHT
NUT
D65-08-00B (2)
LABEL
116220-01-000

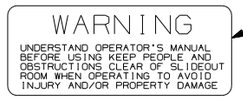

LABEL-WARNING
116549-02-000

DETAIL DB
(FRONT VIEW)

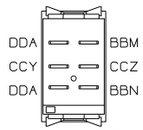

DETAIL DB
(REAR VIEW)

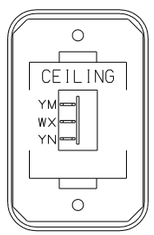

SWITCH-ROCKER
135740-02-CHT
SWITCH-BASE
135741-02-CHT
SWITCH-BEZEL
135742-07-CHT
SCREW
G11-08-08U (2)

DETAIL DC

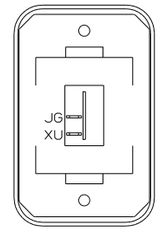

SWITCH-ROCKER
135740-01-CHT
SWITCH-BASE
135741-01-CHT
SWITCH-BEZEL
135742-01-CHT
SCREW
G11-08-08U (2)

DETAIL DD

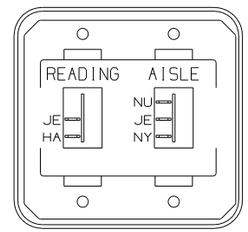

SWITCH-ROCKER
135740-01-CHT
135740-02-CHT
SWITCH-BASE
135741-02-CHT
SWITCH-BEZEL
135742-21-CHT
SCREW
G11-08-08U (4)

DETAIL DE

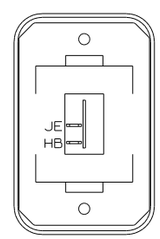

SWITCH-ROCKER
135740-01-CHT
SWITCH-BASE
135741-01-CHT
SWITCH-BEZEL
135742-01-CHT
SCREW
G11-08-08U (2)

DETAIL DF

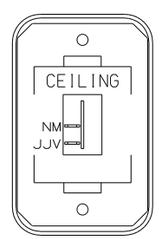

SWITCH-ROCKER
135740-01-CHT
SWITCH-BASE
135741-01-CHT
SWITCH-BEZEL
135742-07-CHT
SCREW
G11-08-08U (2)

DETAIL DG

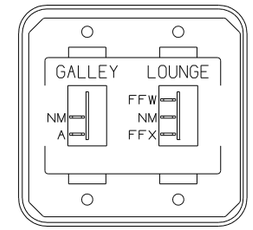

SWITCH-ROCKER
135740-01-CHT
135740-02-CHT
SWITCH-BASE
135741-02-CHT
SWITCH-BEZEL
135742-18-CHT
SCREW
G11-08-08U (4)

DETAIL DH

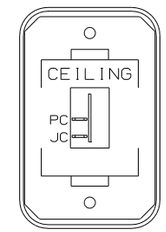

SWITCH-ROCKER
135740-01-CHT
SWITCH-BASE
135741-01-CHT
SWITCH-BEZEL
135742-07-CHT
SCREW
G11-08-08U (2)

DETAIL DJ

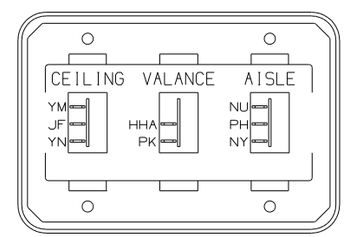

SWITCH-ROCKER
135740-01-CHT
135740-02-CHT (2)
SWITCH-BASE
135741-03-CHT
SWITCH-BEZEL
135742-22-CHT
SCREW
G11-08-08U (4)

DETAIL DK

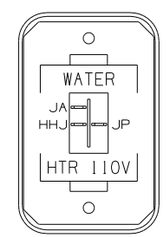

SWITCH-ROCKER
135740-06-CHT
SWITCH-BASE
135741-01-CHT
SWITCH-BEZEL
135742-35-CHT
SCREW
G11-08-08U (2)

DETAIL DL

265 CODES/STANDARDS-CSA/CMVSS

1B1 CODES/STANDARDS USA

1B1 265

FOR ELECTRICAL TORQUE SPECIFICATIONS SEE DWG NO. 128783-01-000

X-X FOR ELECTRICAL CALLOUTS SEE DWG NO. 121339-01-000

FIRST USED 07 P39K

DO NOT SCALE DRAWING

TITLE: WIRING INSTL-BODY,12V

SHEET 4 PART NO 155923 REV

DWG NO 155923

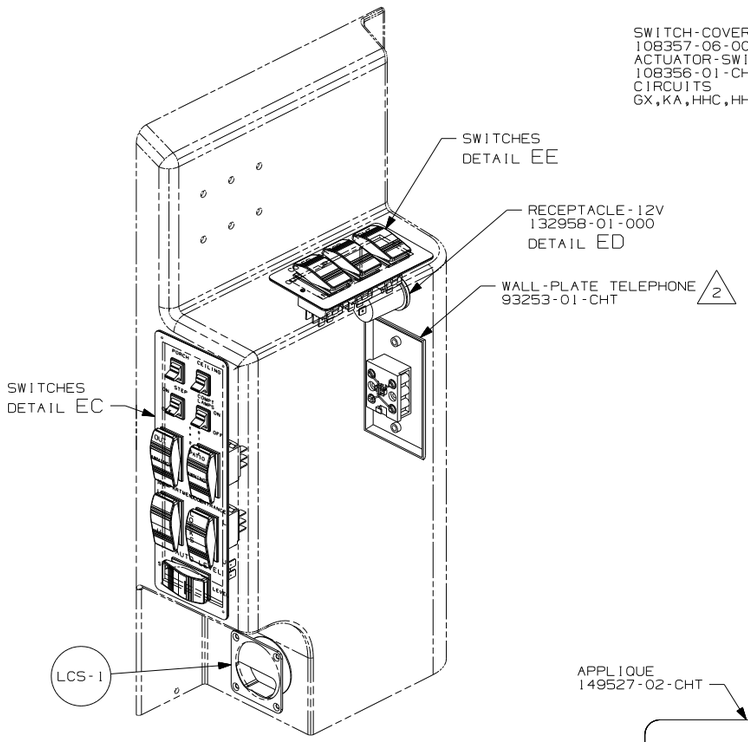

DETAIL EA

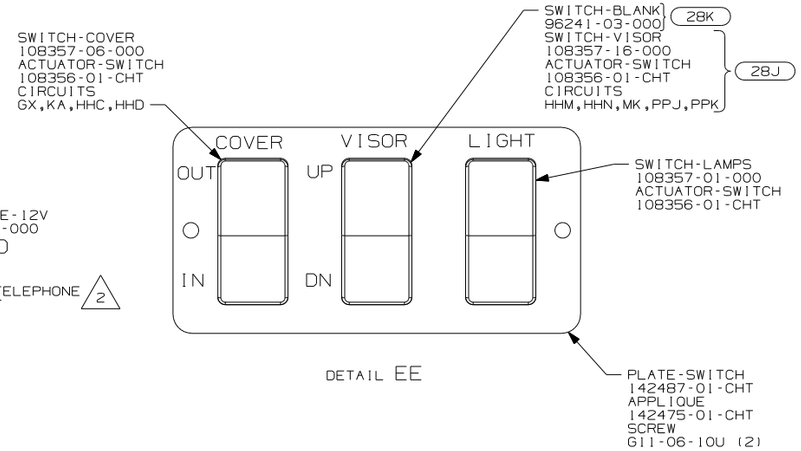

DETAIL EE

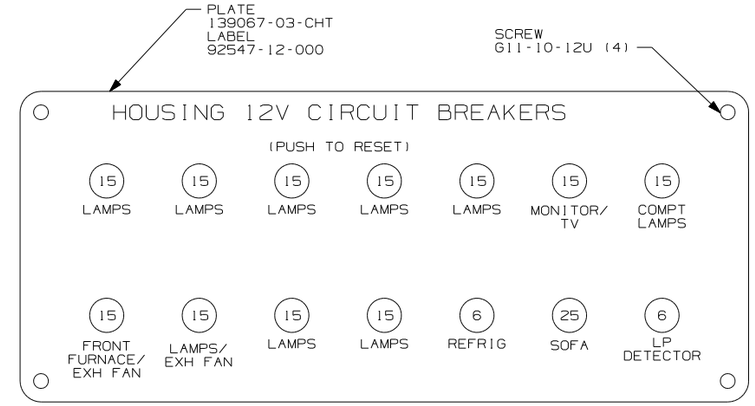

DETAIL EB
(FRONT VIEW)

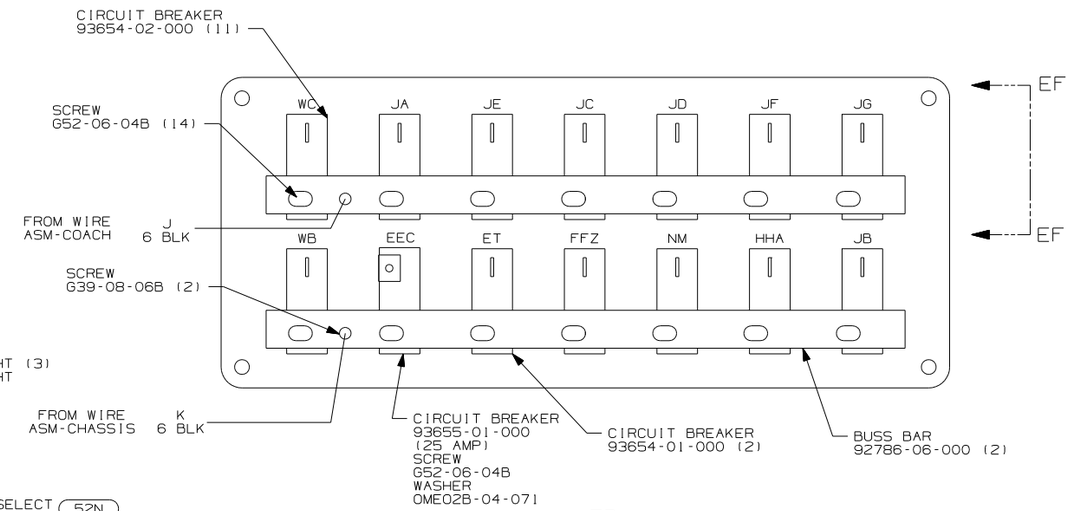

DETAIL EB
(BACK VIEW)

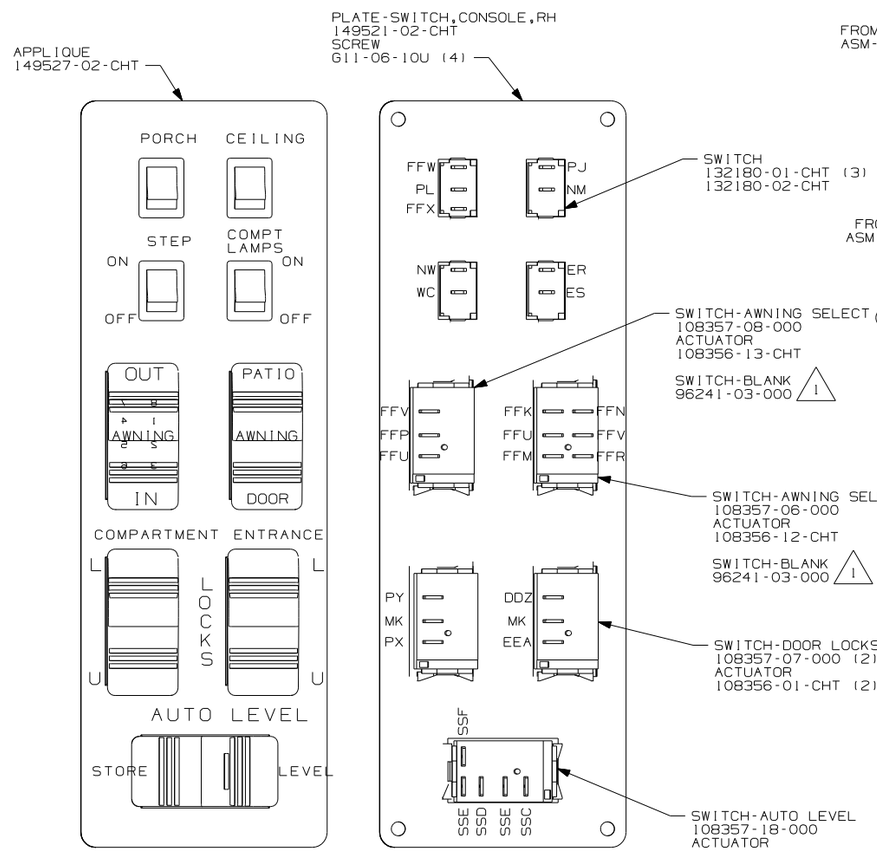

DETAIL EC
(FRONT SIDE)

DETAIL EC
(BACK SIDE)

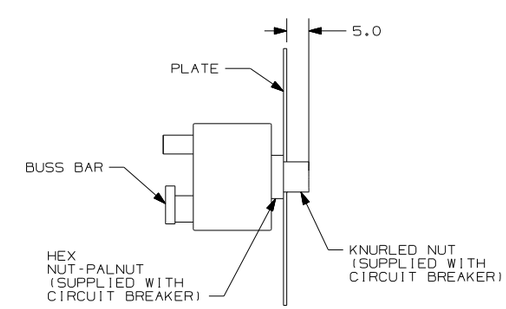

DETAIL EF

DETAIL ED

52N AWNING - PATIO, ELECTRIC
40G POWER DOOR LOCK WITH REMOTE
28K SUNVISORS - MANUAL (2)
28J SUNVISORS - POWERED (2)
265 CODES/STANDARDS-CSA/CMVSS
1B1 CODES/STANDARDS USA

1B1 265

2 CONNECT THE WIRES OF THE SAME COLOR TOGETHER.
1 WITHOUT 52N

NOTES:

FOR ELECTRICAL TORQUE SPECIFICATIONS SEE DWG NO. 128783-01-000

X-X FOR ELECTRICAL CALLOUTS SEE DWG NO. 121339-01-000

FIRST USED 07 P39K

DO NOT SCALE DRAWING

TITLE: WIRING INSTL-BODY,12V

SHEET 5 PART NO 155923 REV

DWG NO 155923

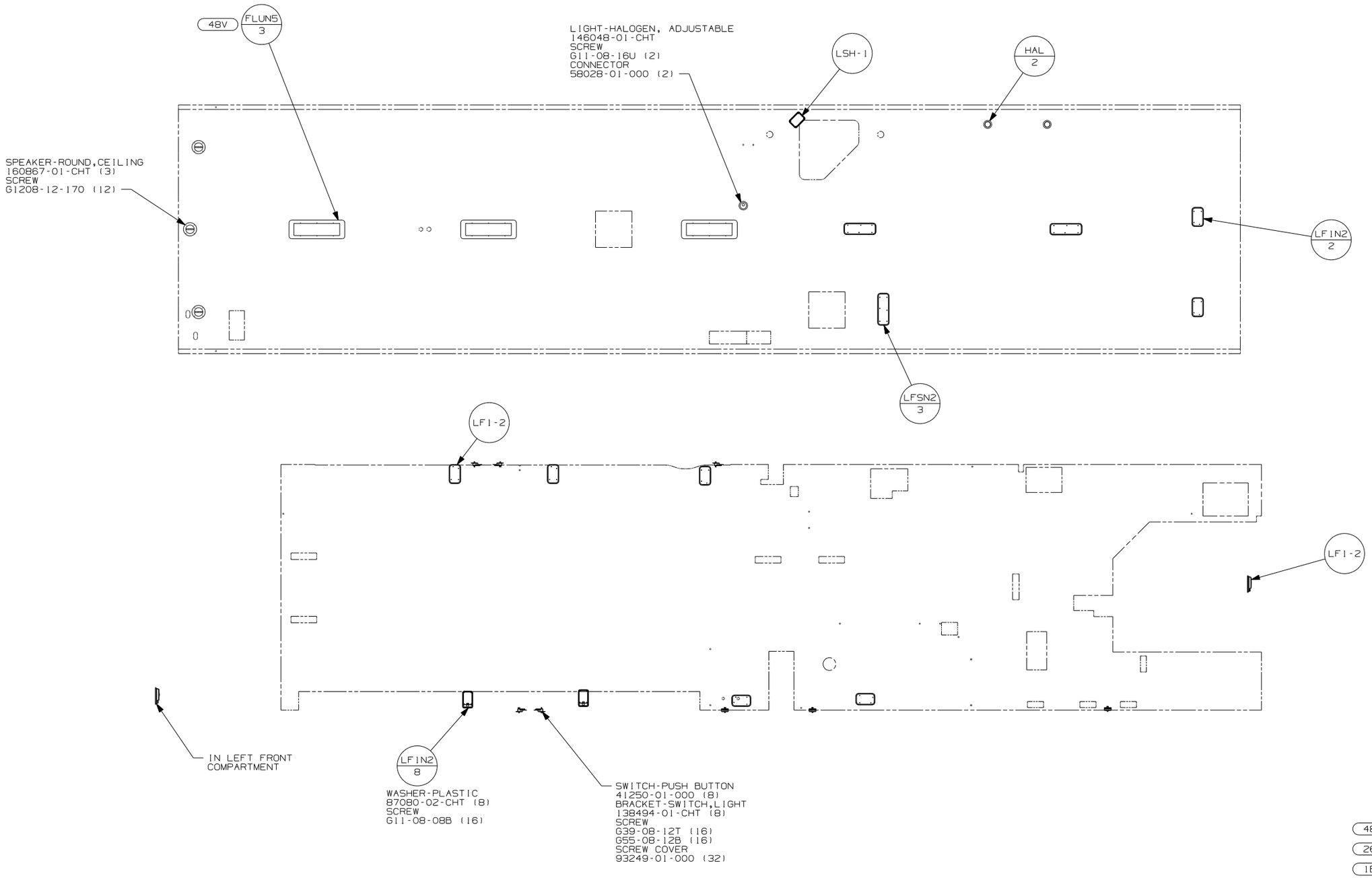

48V LIGHTS-FLUORESCENT

265 CODES/STANDARDS-CSA/CMVSS

1B1 CODES/STANDARDS USA

1B1 265

FOR ELECTRICAL TORQUE SPECIFICATIONS SEE DWG NO. 128783-01-000

X-X FOR ELECTRICAL CALLOUTS SEE DWG NO. 121339-01-000

FIRST USED 07 P39K

DO NOT SCALE DRAWING

TITLE: WIRING INSTL-BODY,12V

SHEET 6 PART NO 155923 REV

DWG NO 155923

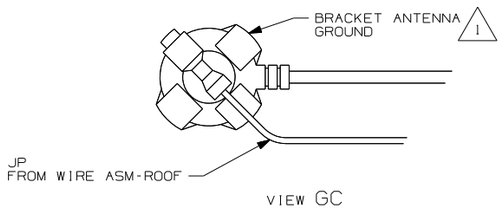

VIEW GC

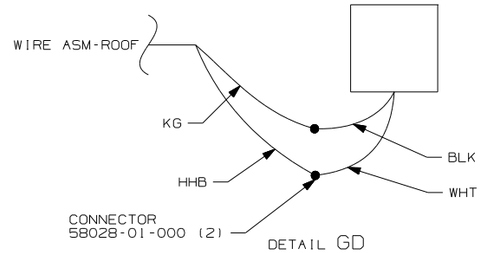

DETAIL GD

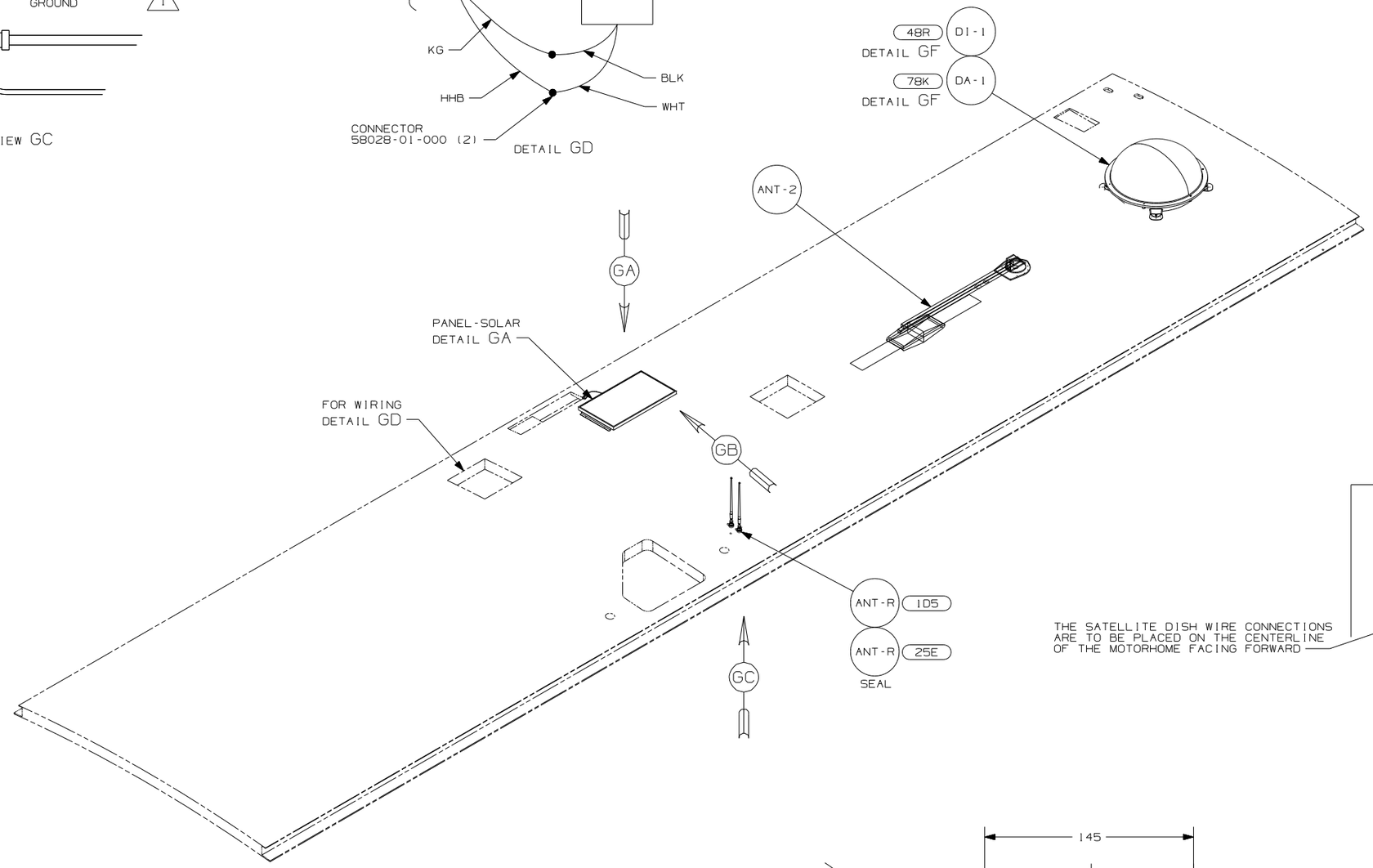

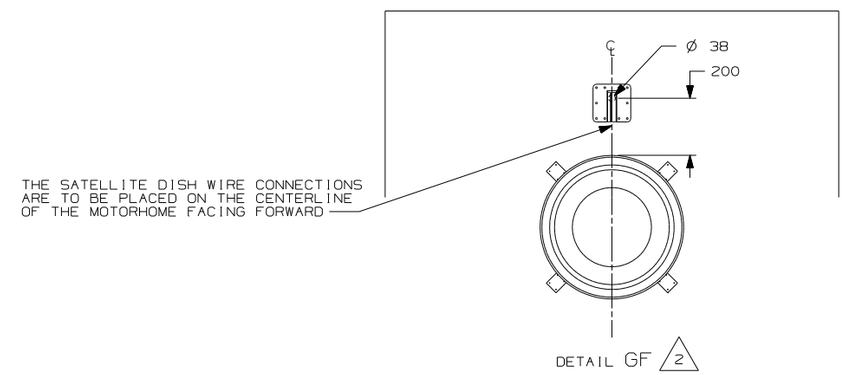

DETAIL GF 2

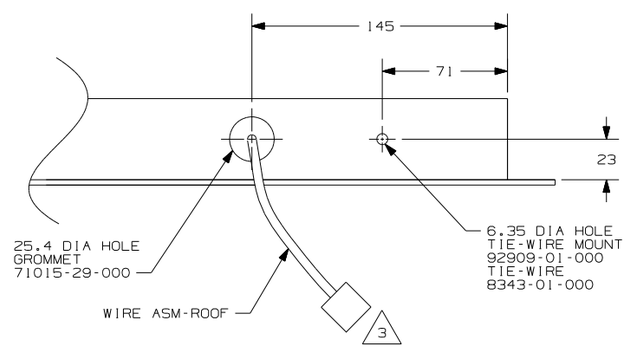

VIEW GB

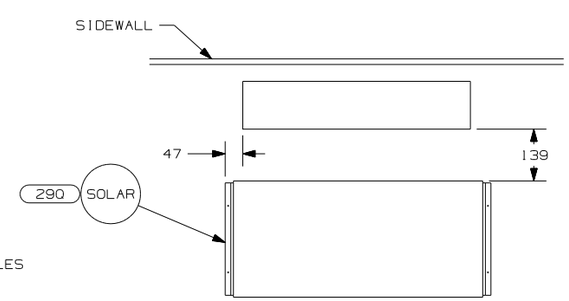

VIEW GA

78K	SATELLITE DISH-AUTOMATIC
48R	SAT. SYS. IN-MOTION W/O RCVR.
29Q	SOLAR PANEL-10 WATT
25E	STEREO SYSTEM W/CD REAR
1D5	ENTERTAINMENT CENTR/EXT W/CD
265	CODES/STANDARDS-CSA/CMVSS
1B1	CODES/STANDARDS USA

1B1 265

NOTES:

3 FASTEN TO VENT

5 REMOVE ALL SHIPPING RESTRAINTS AND FIRMLY INSERT THE SUPPLIED PLUGS INTO THE APPROPRIATE SIZED HOLES AS SPECIFIED IN THE INSTALLATION INSTRUCTIONS.

1 WRAP BRACKET LEGS AROUNG ANTENNA BASE.

FOR ELECTRICAL TORQUE SPECIFICATIONS SEE DWG NO. 128783-01-000

X-X FOR ELECTRICAL CALLOUTS SEE DWG NO. 121339-01-000

FIRST USED 07 P39K

DO NOT SCALE DRAWING

TITLE: WIRING INSTL-BODY,12V

SHEET 7 PART NO 155923 REV

RELEASE	REV A	DATE	DWG NO 157307

REV	ZONE	REVISION RECORD	DATE	DFTR-ORIG

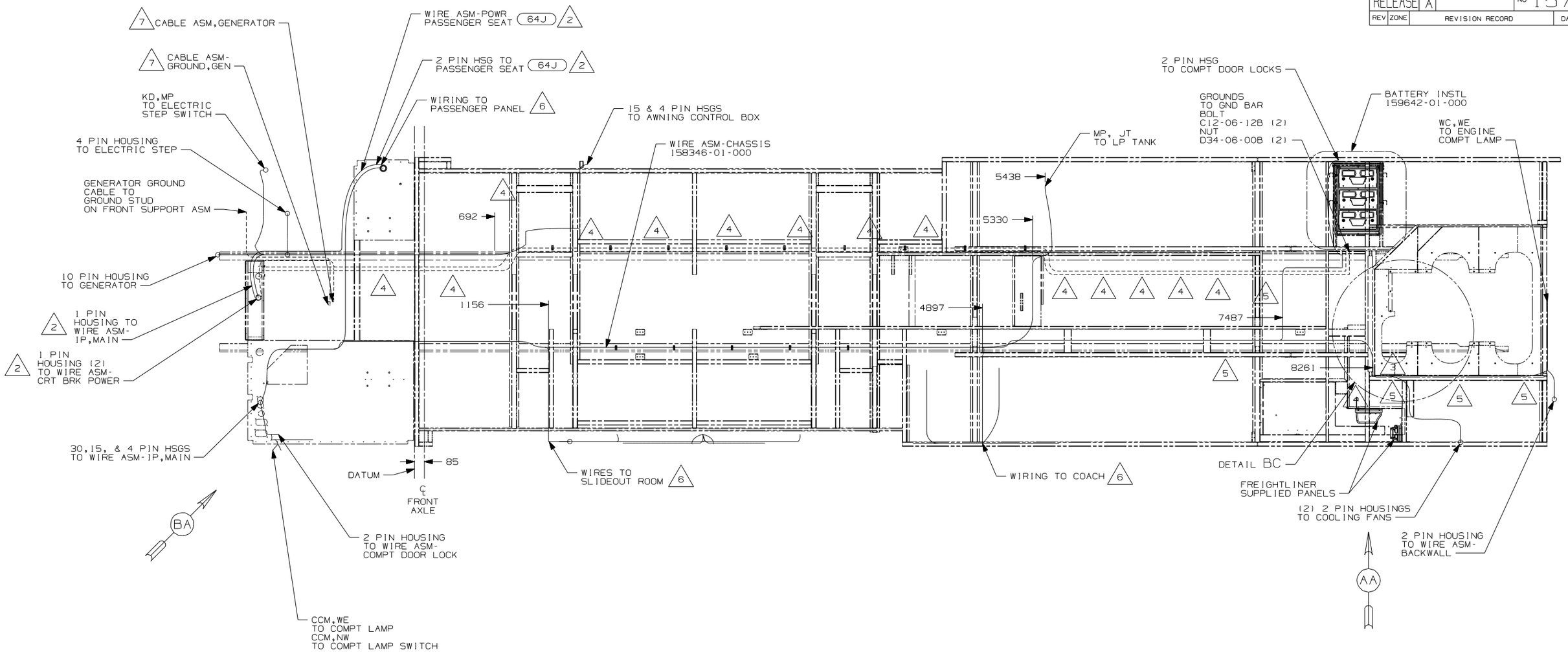

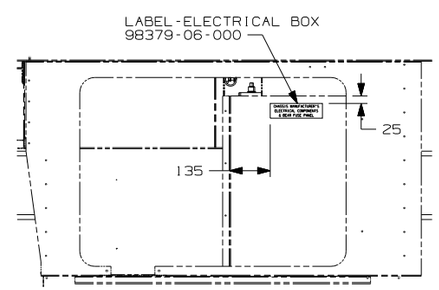

VIEW AA

670 GEN-7.5KW-ONAN-QUIET DIESEL

64J SEAT PED-6-WAY DR/PASS POWER

265 CODES/STANDARDS-CSA/CMVSS

1B1 CODES/STANDARDS USA

1B1 265

7 SEE BATTERY INSTL FOR ADDITIONAL INFORMATION.

6 SEE WIRE ASM-CHASSIS FOR ADDITIONAL INFORMATION.

5 CLAMP 10497-03-000, SCREW G39-08-12B

4 CLAMP 83610-01-000, SCREW G11-10-16B

3 USE WIRE-TIE 8343-02-000 TO SECURE WIRES TO FLOOR SUPPORT FRAME AT LEAST ONCE EVERY 600MM.

2 SEE WIRING INSTL-FRONT END FOR ADDITIONAL INFORMATION.

NOTES:

1. LEGEND: ———— WINNEBAGO: - - - - - - - - - - - - CABLE: —— — —— — CHASSIS SUPPLIED WIRING.

DFTR	ORIG. DATE
CHKR	ALL DIMENSIONS ARE IN MILLIMETERS
P.E.	
M.E.	FIRST USED 07 P39K
DSNR	

UNSPECIFIED TOLERANCES ARE:

WHOLE DIM (X)	:	3
ONE-PLACE (X.X)	:	1.5
TWO-PLACE (X.XX)	:	0.50
ANGLE	:	1°

MATERIAL:

THIRD ANGLE PROJECTION

DO NOT SCALE DRAWING

TITLE: WIRING INSTL-CHASSIS

SHEET 1 OF 2 | PART NO 157307 | REV

REF: 1 7/18/2006

DWG NO 157307

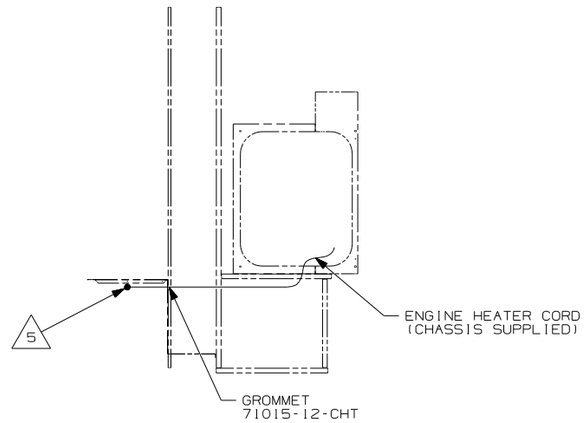

DETAIL BC 4

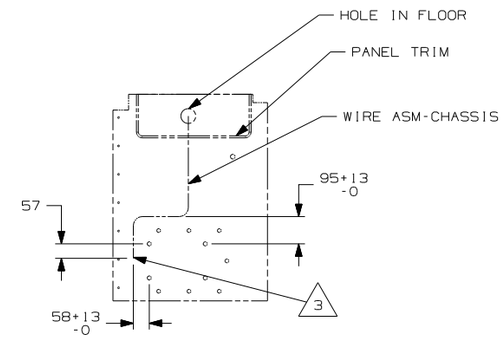

DETAIL BB 64J

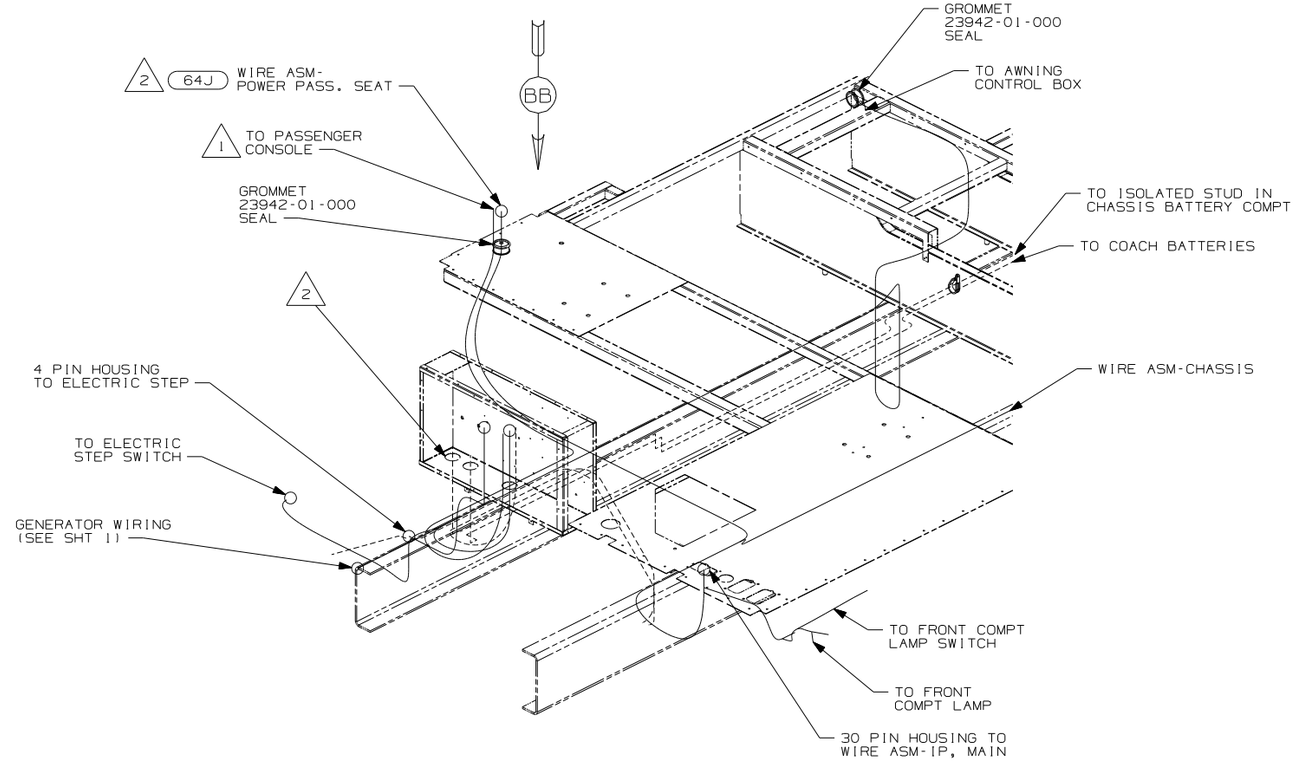

VIEW BA

NOTES:

5 ENGINE HEATER CORD MUST PASS THRU COMPT. AT LEAST 250MM TO PLUG INTO RECP.

4 SECURE CORD AWAY FROM ALL MOVING PARTS AND EXHAUST WITH WIRE-TIE 93147-01-000 AS REQUIRED.

3 LEAVE 675±50MM OF WIRE AT END POINT OF PATH.

2 SEE WIRING INSTL-FRONT END FOR ADDITIONAL INFORMATION.

1 SEE WIRE ASM-CHASSIS FOR ADDITIONAL INFORMATION.

64J SEAT PED-6-WAY DR/PASS POWER

265 CODES/STANDARDS-CSA/CMVSS

1B1 CODES/STANDARDS USA

1B1 265

FIRST USED	07 P39K
	DO NOT SCALE DRAWING
TITLE:	WIRING INSTL-CHASSIS
SHEET 2	PART NO 157307 REV

DRAWING NO.	SHEET	SERIES
156331-01	1	200
156331-02	2	300 & 700
156331-03	3	500
156331-04	4	D,F,G,P,R,S-SERIES
156331-05	5	E-SERIES

RELEASE	REV A	DATE	DWG NO 156331
REV	ZONE	REVISION RECORD	DATE / DFTR-ORIG

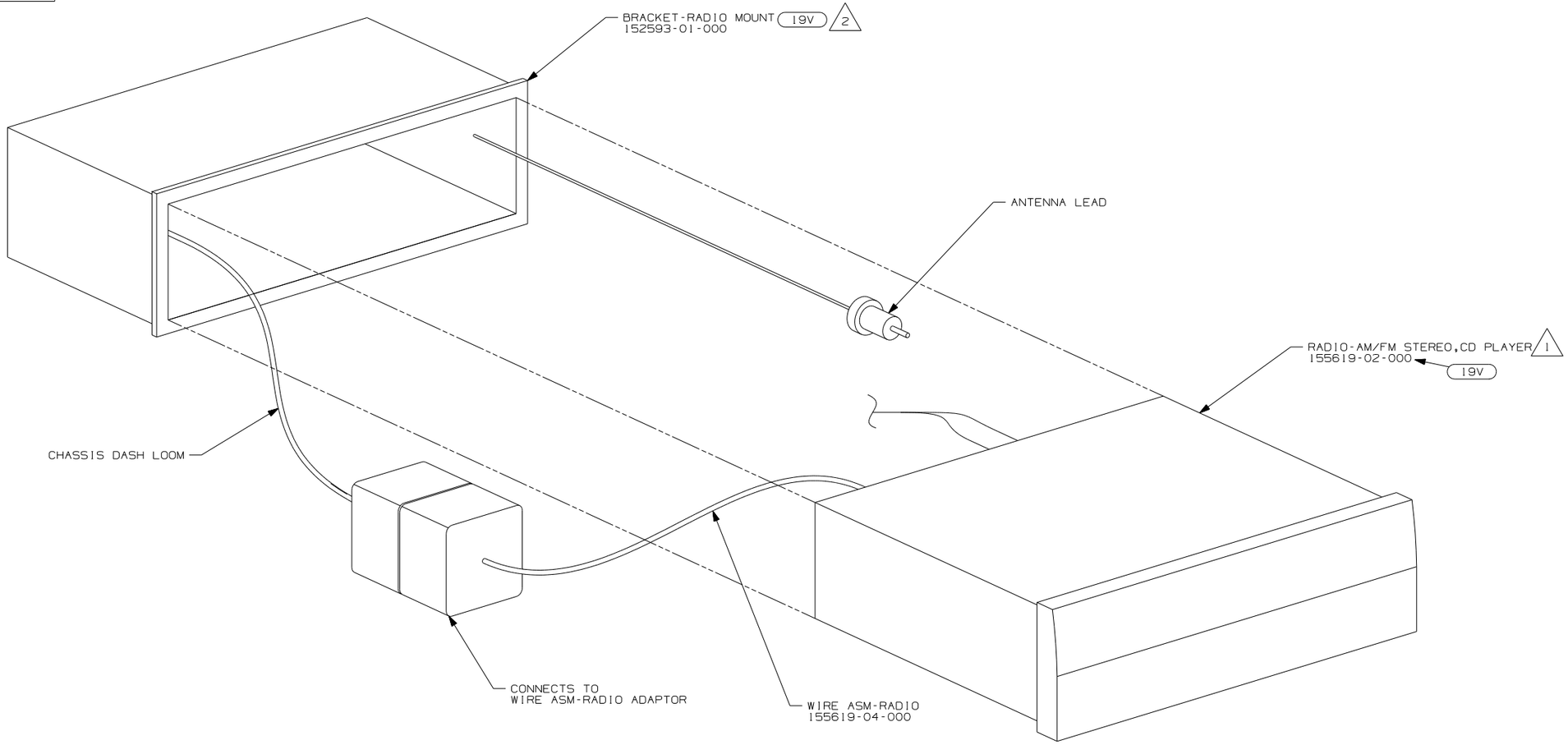

19V RADIO-AM/FM STEREO CD PLAYER (FORD CHASSIS ONLY)

WINNEBAGO INDUSTRIES

DFTR | ORIG. DATE
CHKR | ALL DIMENSIONS ARE IN MILLIMETERS
P.E.
M.E. | FIRST USED 07 MOTORHOMES
DSNR

UNSPECIFIED TOLERANCES ARE:
WHOLE DIM (X) :
ONE-PLACE (X.X) :
TWO-PLACE (X.XX) :
ANGLE :
THIRD ANGLE PROJECTION

MATERIAL:

DO NOT SCALE DRAWING

TITLE: RADIO INSTL

SHEET 1 OF 5 | PART NO 156331 | REV

2 INSTALL REAR RADIO SUPPORT BRACKET, ENGAGING T-RAIL ON BOTTOM OF RADIO UNTIL LOCKED IN PLACE.

1 BEND TABS ON ALL 4 SIDES TO SECURE RADIO MOUNTING BRACKET TO DASH MOUNTING BRACKET.

NOTES:

DWG NO 156331

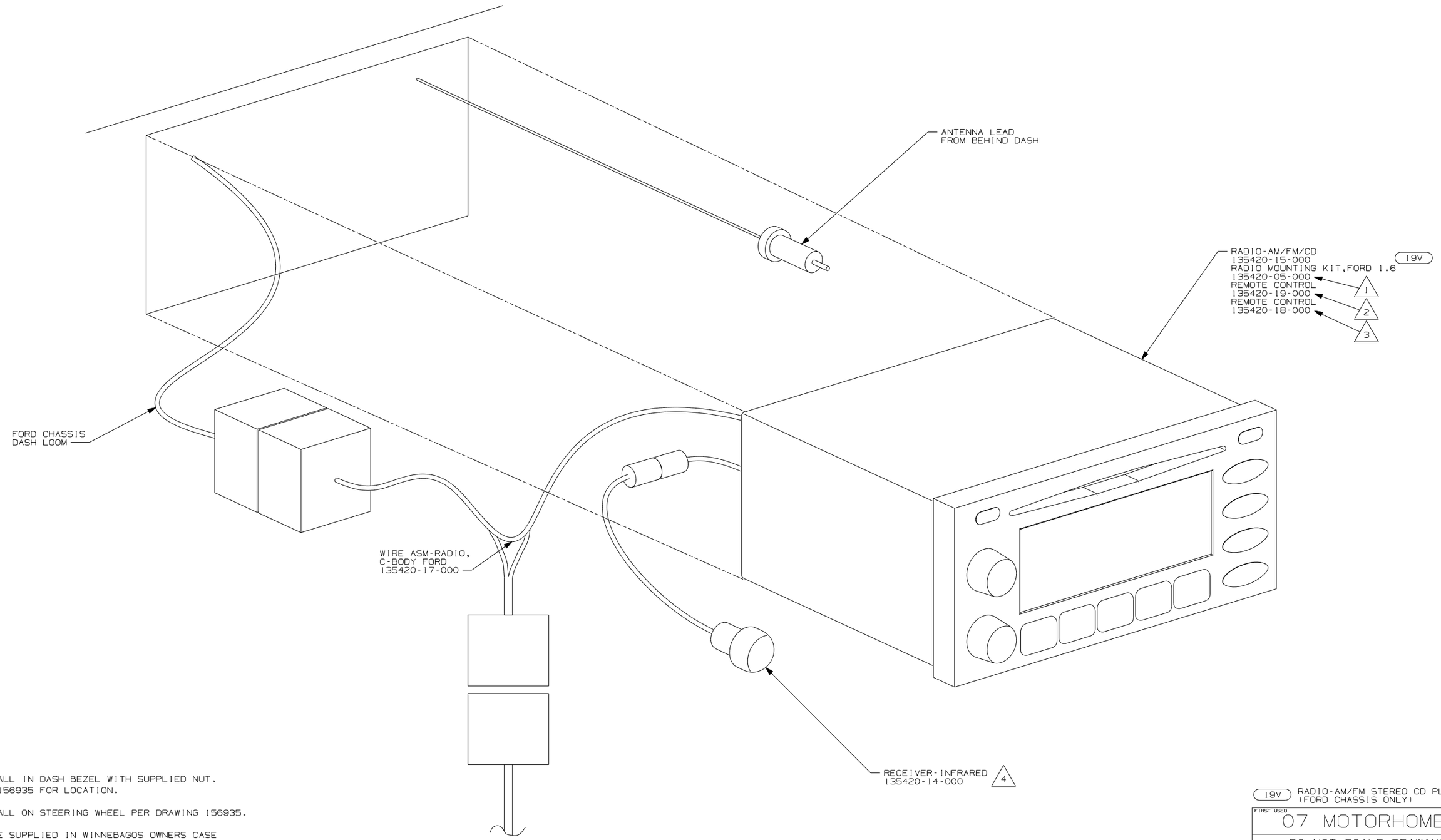

4 INSTALL IN DASH BEZEL WITH SUPPLIED NUT.
SEE 156935 FOR LOCATION.

3 INSTALL ON STEERING WHEEL PER DRAWING 156935.

2 TO BE SUPPLIED IN WINNEBAGOS OWNERS CASE

1 INSTALL REAR RADIO SUPPORT BRACKET, ENGAGING T-RAIL
ON BOTTOM OF RADIO UNTIL LOCKED IN PLACE.

NOTES:

19V RADIO-AM/FM STEREO CD PLAYER
(FORD CHASSIS ONLY)

FIRST USED
07 MOTORHOMES

DO NOT SCALE DRAWING

TITLE:
RADIO INSTL

SHEET 2 | PART NO 156331 | REV

DWG NO 156331

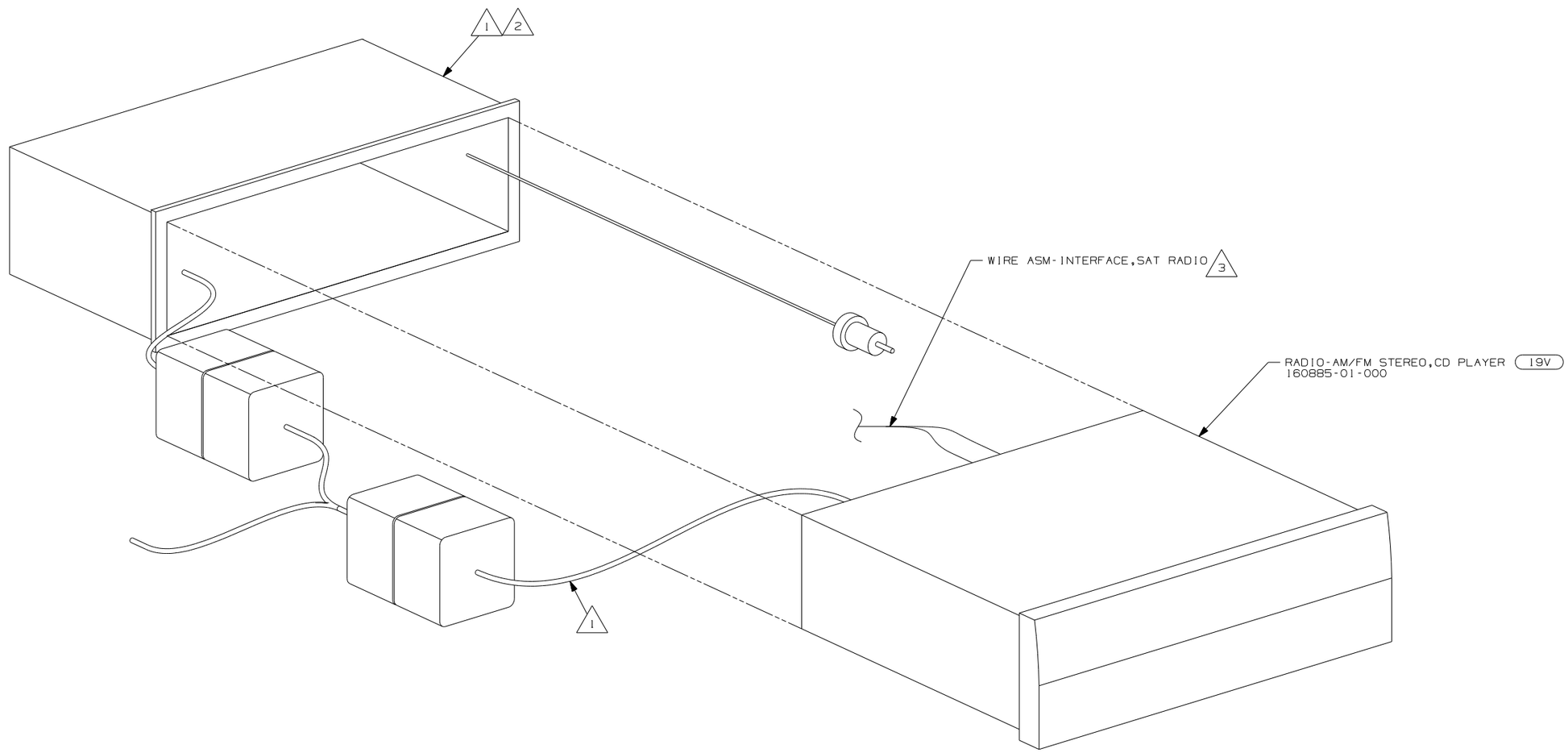

3 TO SATELLITE RECEIVER. SEE ANTENNA INSTL-RADIO & CB FOR ADDITIONAL INFORMATION.

2 BEND TABS ON ALL 4 SIDES TO SECURE MOUNTING BRACKET TO DASH OPENING.

1 SUPPLIED WITH RADIO

NOTES:

19V RADIO-AM/FM STEREO CD PLAYER

FIRST USED	07 MOTORHOMES
	DO NOT SCALE DRAWING
TITLE:	RADIO INSTL
SHEET	PART NO 156331 REV

DWG NO 156331

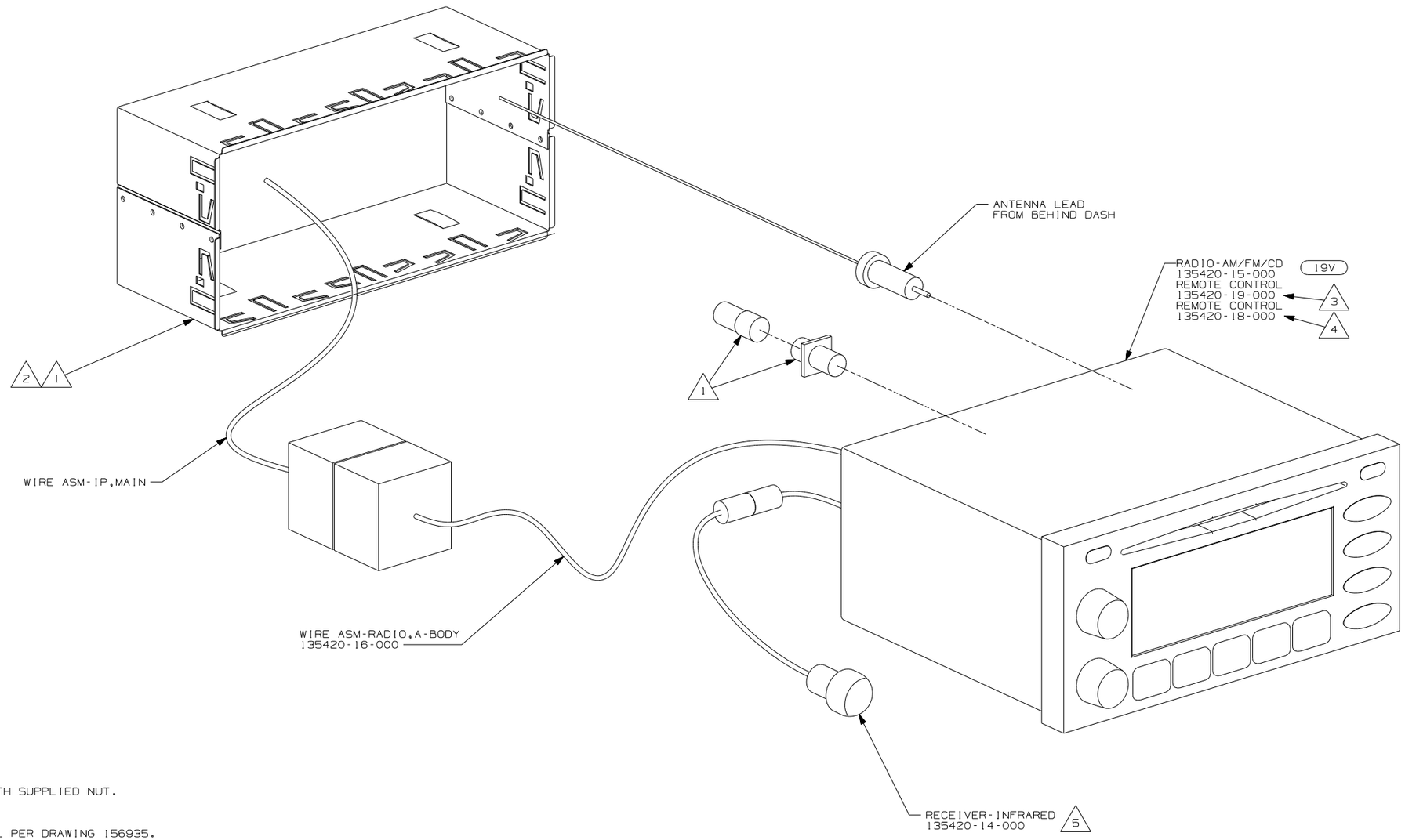

NOTES:

5. INSTALL IN DASH BEZEL WITH SUPPLIED NUT. SEE 156935 FOR LOCATION.
4. INSTALL ON STEERING WHEEL PER DRAWING 156935.
3. TO BE SUPPLIED IN WINNEBAGOS OWNERS CASE
2. BEND TABS ON ALL 4 SIDES TO SECURE MOUNTING BRACKET TO DASH OPENING.
1. SUPPLIED WITH MOUNTING KIT 135420-07-000

19V RADIO-AM/FM STEREO CD PLAYER

FIRST USED: 07 MOTORHOMES

DO NOT SCALE DRAWING

TITLE: RADIO INSTL

SHEET 4 | PART NO 156331 | REV

DWG NO 156331

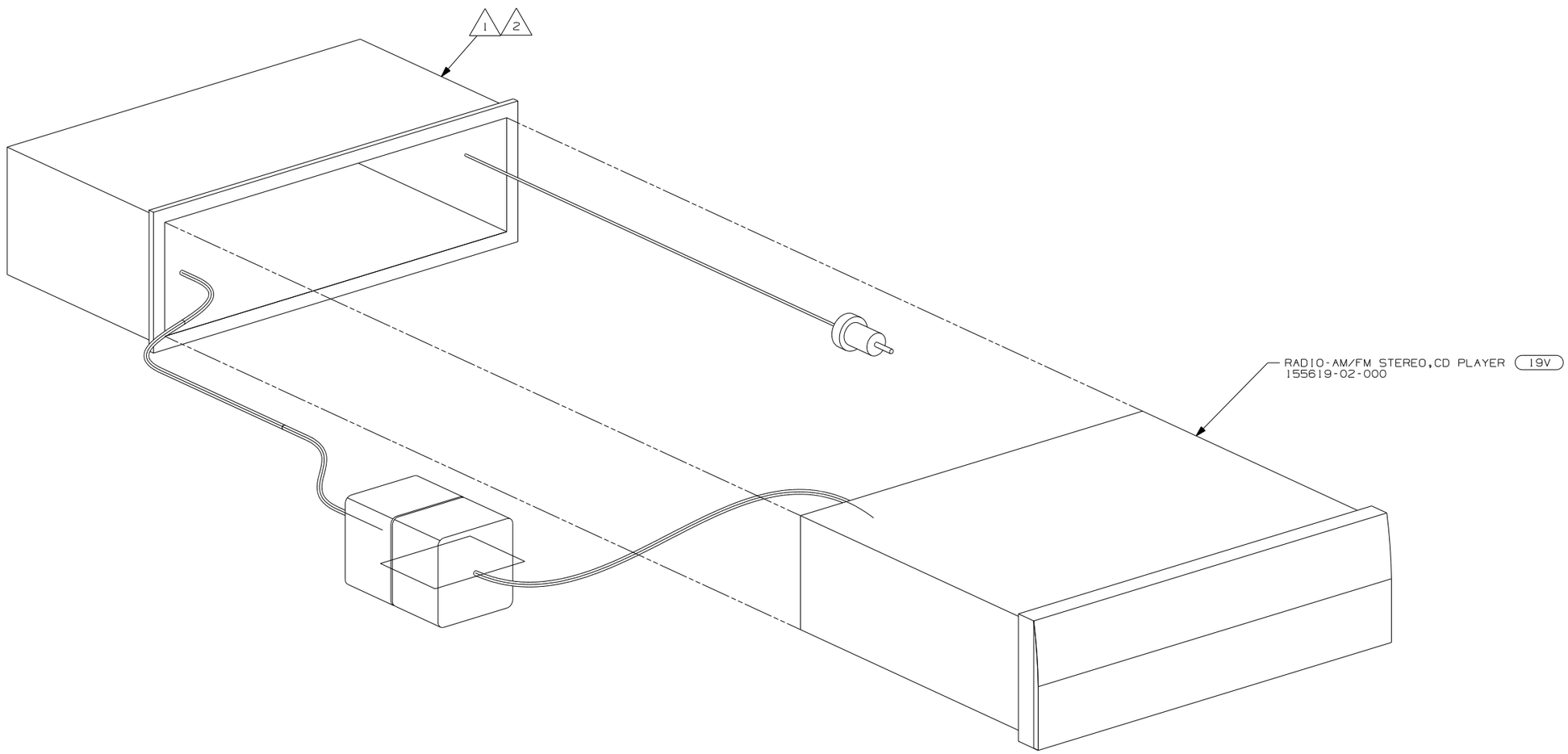

19V RADIO-AM/FM STEREO CD PLAYER

2 BEND TABS ON ALL 4 SIDES TO SECURE MOUNTING BRACKET TO DASH OPENING.

1 SUPPLIED WITH RADIO

NOTES:

FIRST USED	07 MOTORHOMES
	DO NOT SCALE DRAWING
TITLE:	RADIO INSTL
SHEET	PART NO 156331 REV

DRAWING NO.	
156374-01	WIN
156374-02	ITA

RELEASE	REV A	DATE	DWG NO 156374
REV	ZONE	REVISION RECORD	DATE / DFTR-ORIG

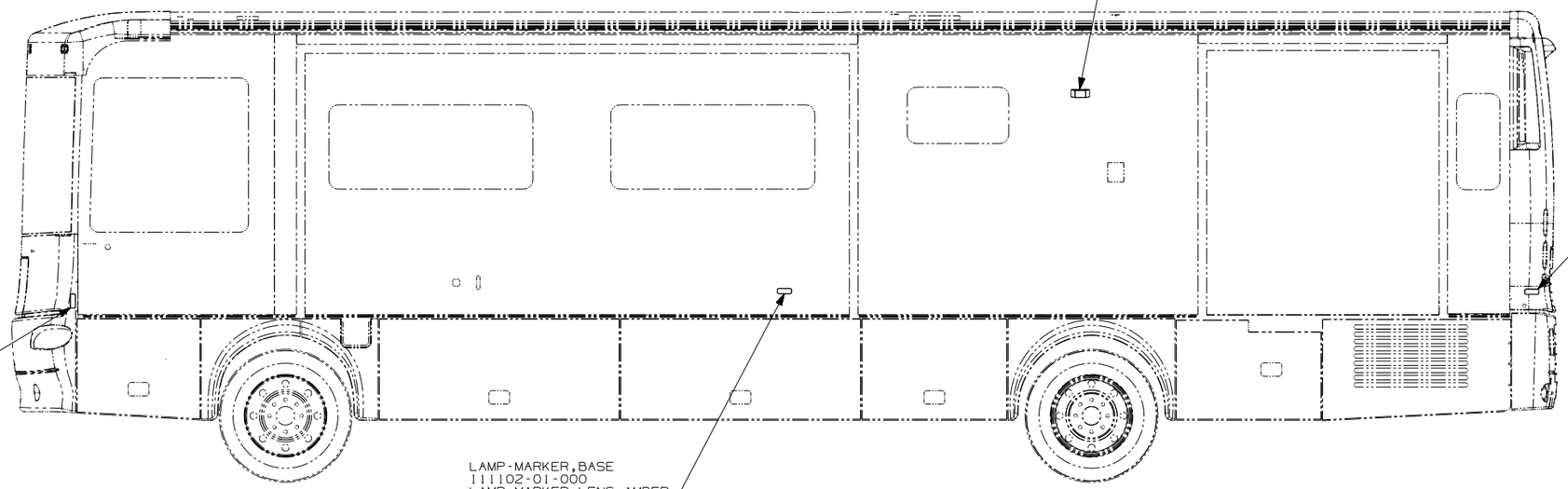

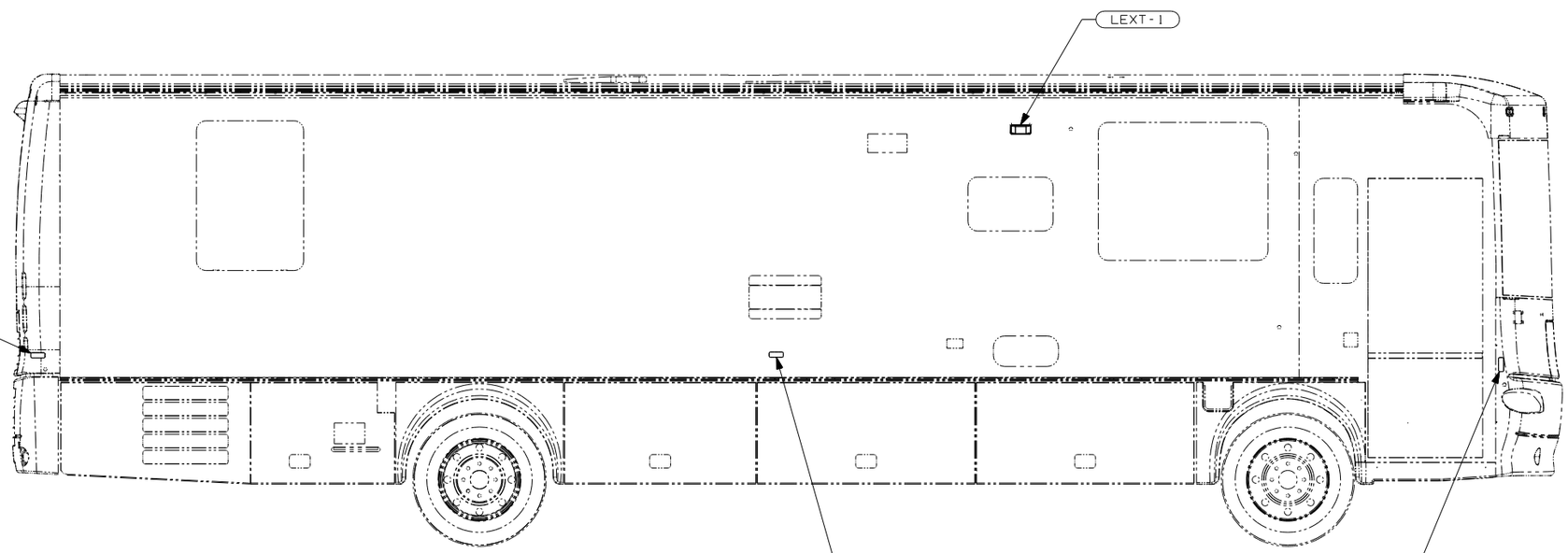

265 CODES/STANDARDS-CSA/CMVSS

1B1 CODES/STANDARDS USA

1B1 265

WINNEBAGO INDUSTRIES

DFTR	ORIG. DATE
CHKR	ALL DIMENSIONS ARE IN MILLIMETERS
P.E.	
M.E.	FIRST USED
DSNR	07 P-SERIES

UNSPECIFIED TOLERANCES ARE:
WHOLE DIM (X) :
ONE-PLACE (X.X) :
TWO-PLACE (X.XX) :
ANGLE :

MATERIAL:

THIRD ANGLE PROJECTION

DO NOT SCALE DRAWING

TITLE: WIRING INSTL-EXTERIOR LAMPS

SHEET 1 OF 2 | PART NO 156374 | REV

FOR ELECTRICAL TORQUE SPECIFICATIONS SEE DWG NO. 128783-01-000

X-X FOR ELECTRICAL CALLOUTS SEE DWG NO. 121339-01-000

DWG NO 156374

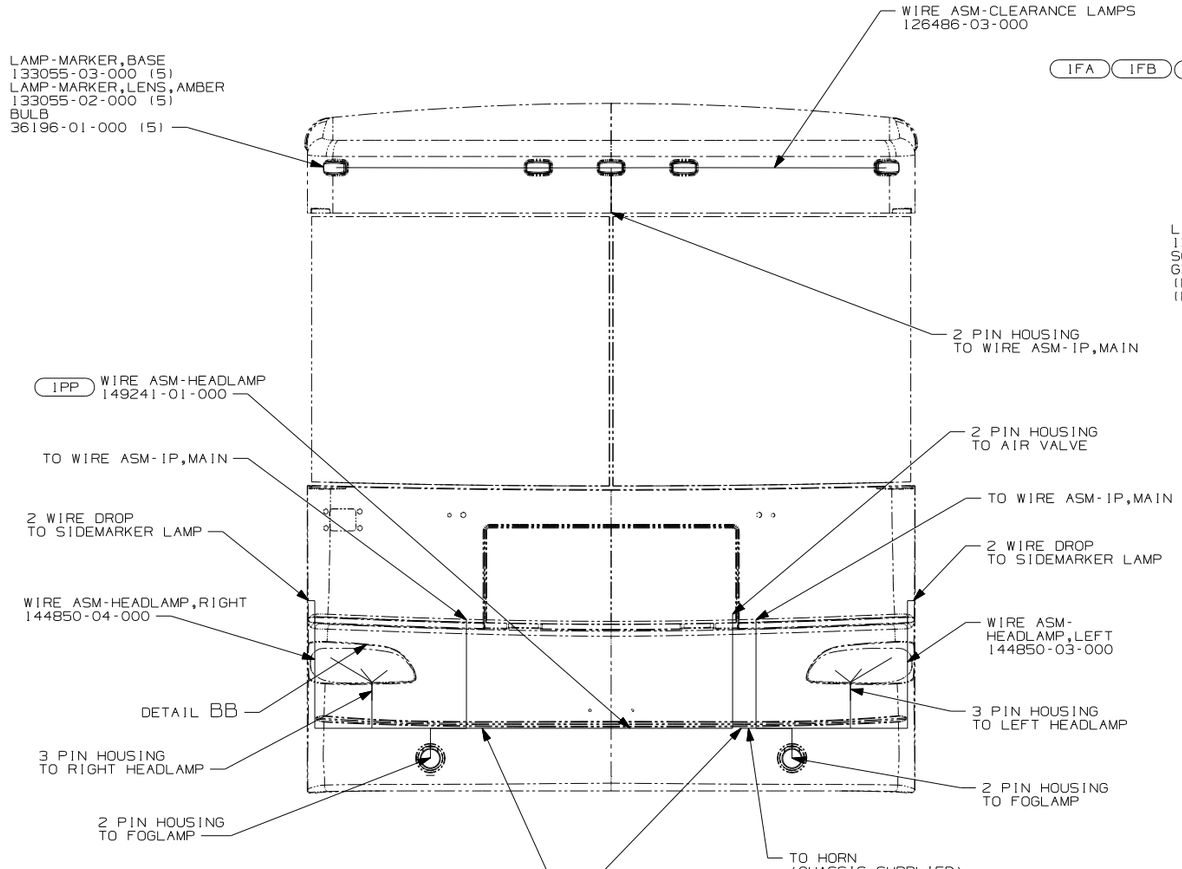

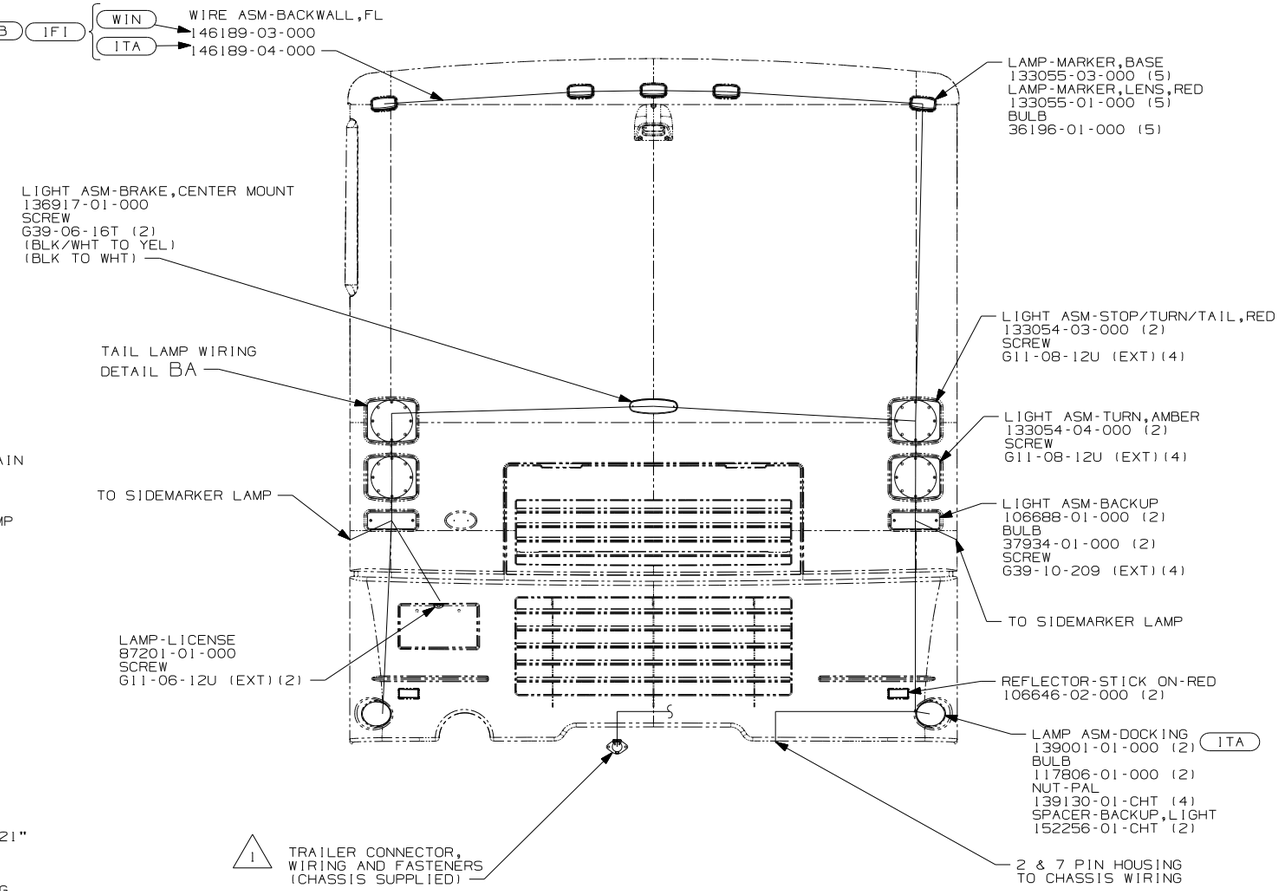

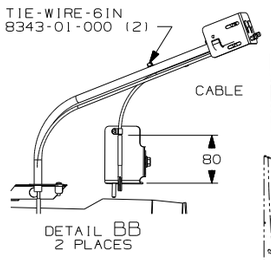

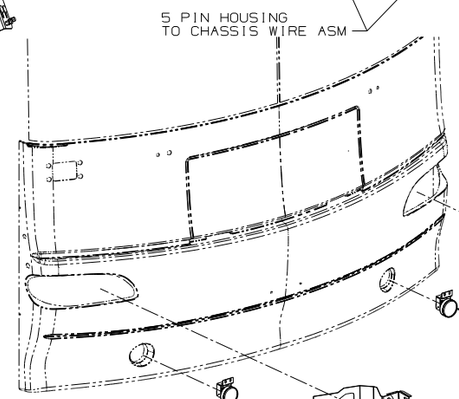

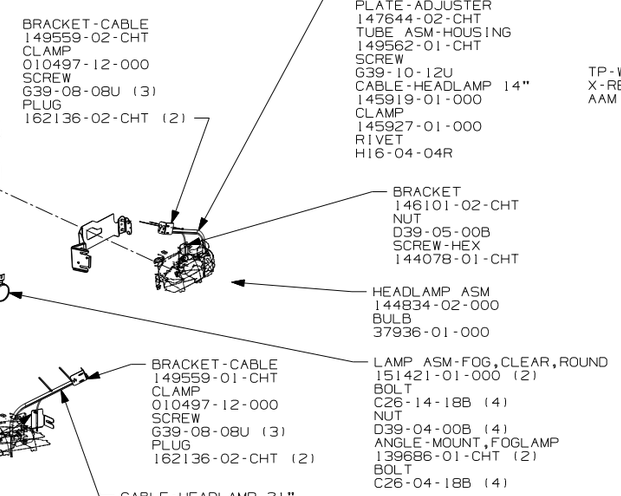

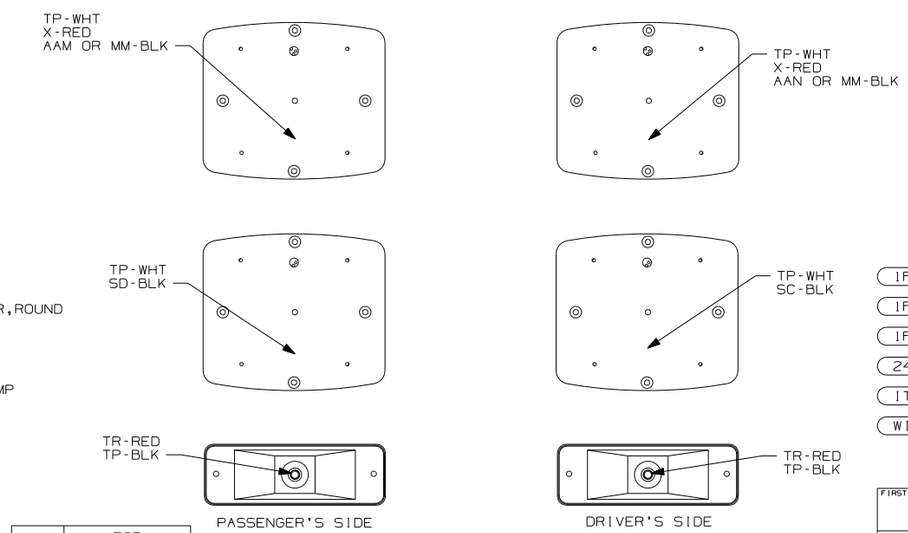

DETAIL BA
(SHOWN FROM REAR SIDE)

IFI	FRTL 27,910 350HP 7.2L 6SPD
IFB	FRTL 300HP 5.9L 6SPD AL WHLS
IFA	FRTL 27,910 300 5.9L 5-SP
240	TRAILER HITCH
ITA	ITASCA ONLY
WIN	WINNEBAGO ONLY

FOR ELECTRICAL TORQUE SPECIFICATIONS SEE DWG NO. 128783-01-000

X-X FOR ELECTRICAL CALLOUTS SEE DWG NO. 121339-01-000

NOTES:

2 LAMP TO BE ASSEMBLED TO BRACKET PRIOR TO ITS ATTACHMENT TO THE FRONT END.

1 CONNECTOR-PLUG,TRAILER (146246-01-000) TO BE SUPPLIED IN COACH.

FIRST USED 07 P-SERIES

DO NOT SCALE DRAWING

TITLE: WIRING INSTL-EXTERIOR LAMPS

SHEET 2 | PART NO 156374 | REV

DRAWING NO.	FEATURE
157298-01	WIN
157298-02	ITA

RELEASE	REV A	DATE	DWG NO 157298
REV	ZONE	REVISION RECORD	DATE / DFTR-ORIG

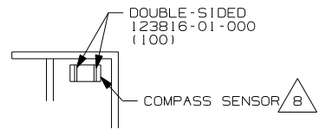

VIEW AB

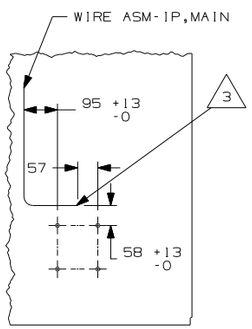

VIEW AA 10 640

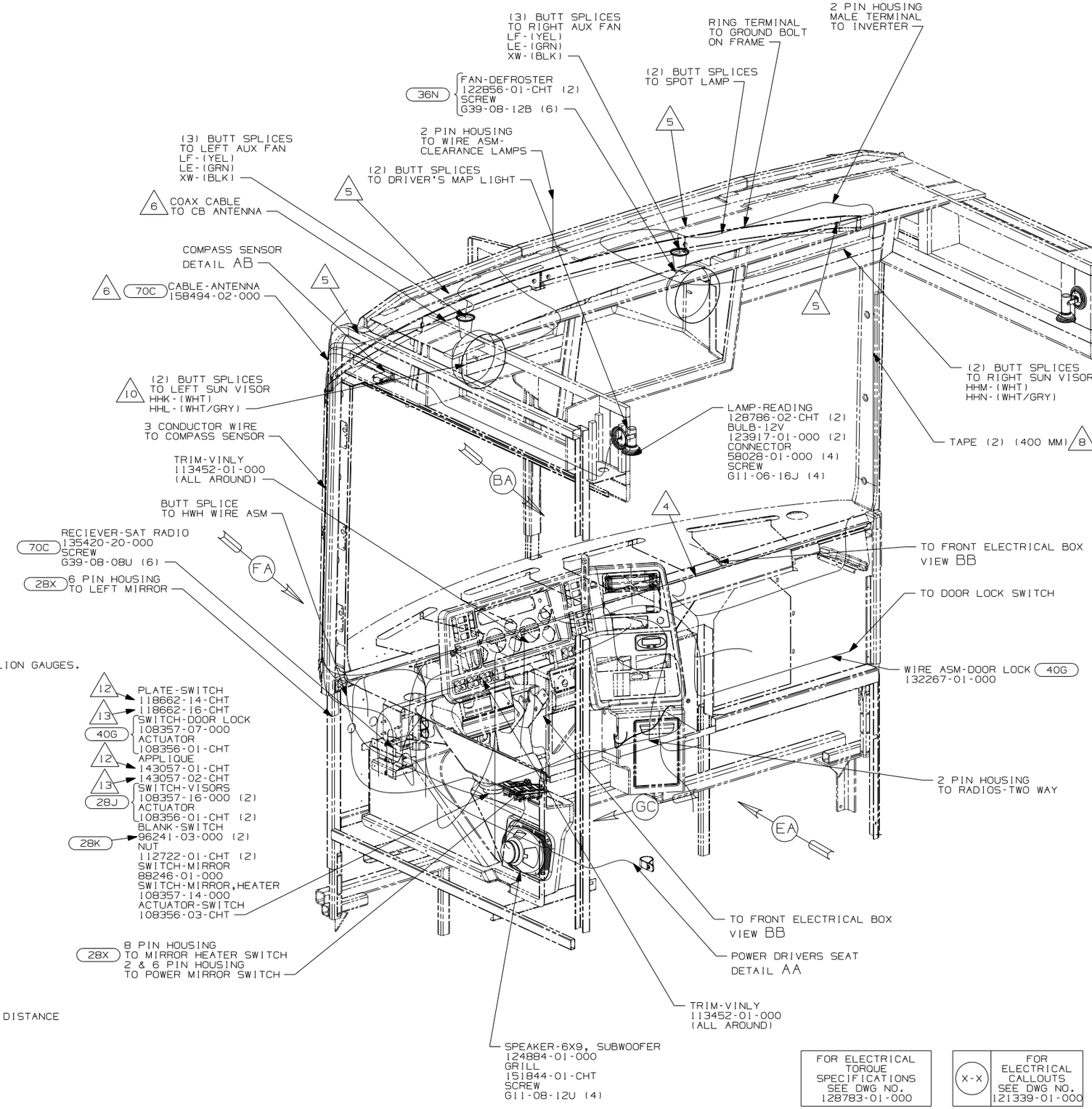

13 FREIGHTLINER CHASSIS (JOB 2) WITH POLLAK GAUGES. SEE 2007 CHASSIS MATRIX FOR ADDITIONAL INFORMATION.

12 FREIGHTLINER CHASSIS (START OF PRODUCTION) WITH MEDALLION GAUGES. SEE 2007 CHASSIS MATRIX FOR ADDITIONAL INFORMATION

11 CABLE SUPPLIED WITH SATELLITE RADIO RECIEVER. PLUG INTO BACK OF RADIO AND TIE TO IP,MAIN.

10 CUT VISOR WIRING TO 300MM BEFORE CONNECTING.

9 WITHOUT 64J OR 64Q, COIL WIRE AND TIE BACK WITH MAIN LOOM.

8 USE TAPE 136748-01-000 TO SECURE WIRES IN A-POST.

7 MOUNT SENSOR WITH DOUBLE SIDED TAPE IN BOTTOM OF SIDE OVHD SO THAT SENSOR FACES FORWARD AS STATED ON SENSOR LABEL.

6 SEE ANTENNA INSTL-CB FOR ADDITIONAL INFORMATION..

5 USE TIE WIRE MOUNT 92901-01-000 AND TIE-WIRE 93147-01-000 TO SECURE WIRE ASM-IP,MAIN.

4 USE TAPE 8363-01-000 TO SECURE WIRE ASM-IP,MAIN CHASSIS SUPPLIED WIRE ASM-IP, CRUISE WIRING AND HEATER A/C WIRES TOGETHER EVERY 300 IN THIS AREA AFTER ROUTING AND MAKING ALL CONNECTIONS.

3 WIRE ASM MAY BE ROUTED ON EITHER SIDE OF HOLE PATTERN DISTANCE SHOWN AT END POINT OF PATH. LEAVE 675± 50MM OF WIRE.

2. USE SEAL-TRIM 113452-01-000 TO PROTECT WIRES FROM SHARP EDGES.

1. FOR ADDITIONAL INFORMATION SEE WIRING INSTL-CHASSIS.

NOTES:

70C	RADIO - SATELLITE
64Q	SEAT PED-6-WAY POWER DRIVER
40G	POWER DOOR LOCK WITH REMOTE
36N	FANS-DEFROSTER, AUXILLARY
28X	MIRRORS-EXTERIOR W/DEFROST
28K	SUNVISORS - MANUAL (2)
28J	SUNVISORS - POWERED (2)
265	CODES/STANDARDS-CSA/CMVSS
1B1	CODES/STANDARDS USA

1B1 265

FOR ELECTRICAL TORQUE SPECIFICATIONS SEE DWG NO. 128783-01-000

X-X FOR ELECTRICAL CALLOUTS SEE DWG NO. 121339-01-000

WINNEBAGO INDUSTRIES

DFTR | ORIG. DATE
CHKR | ALL DIMENSIONS ARE IN MILLIMETERS
P.E.
M.E. | FIRST USED 07 P-SER
DSNR

UNSPECIFIED TOLERANCES ARE:
WHOLE DIM (X) : 3
ONE-PLACE (X.X) : 1.5
TWO-PLACE (X.XX) : 0.50
ANGLE : 1°

MATERIAL:

THIRD ANGLE PROJECTION

DO NOT SCALE DRAWING

TITLE: WIRING INSTL-FRONT END

SHEET 1 OF 8 | PART NO 157298 | REV

DWG NO 157298

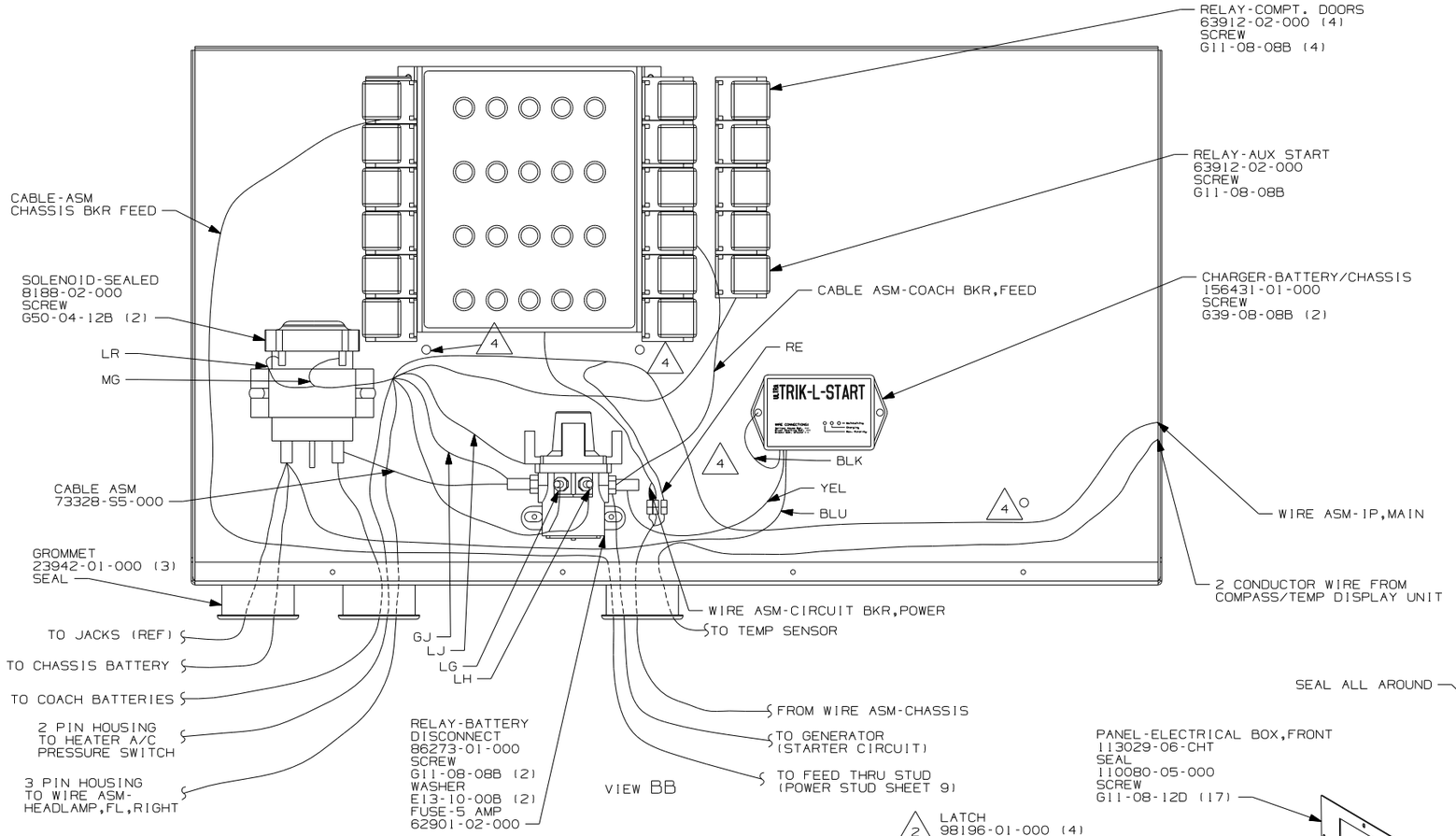

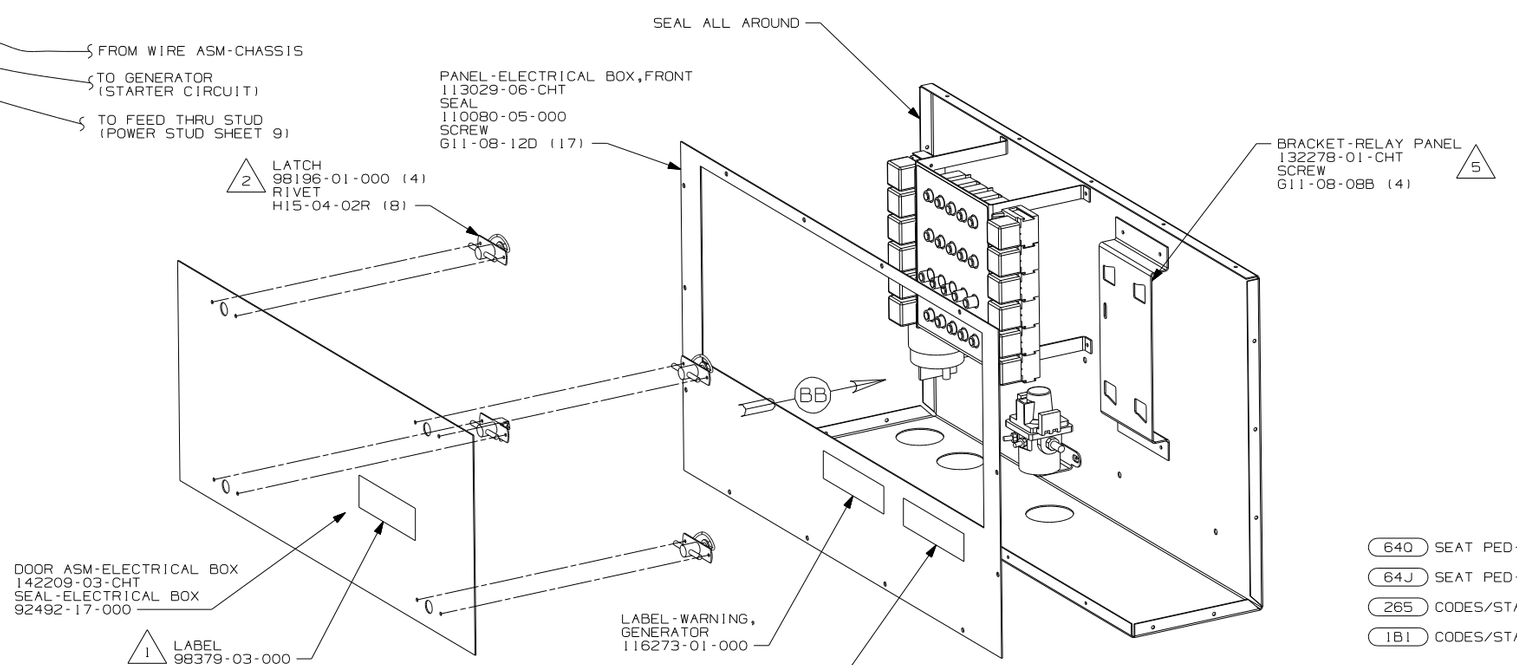

640 SEAT PED-6-WAY POWER DRIVER

64J SEAT PED-6-WAY DR/PASS POWER

265 CODES/STANDARDS-CSA/CMVSS

1B1 CODES/STANDARDS USA

1B1 265

NOTES:

5. DO NOT REMOVE CHASSIS SUPPLIED FUSE COVER.
4. USE TIE-WIRE 8343-02-000 (4)
   TIE-WIRE,MOUNT, 92909-01-000 (4)
3. COIL WIRE ASM UP OUTSIDE ELECTRICAL BOX.
   TO BE ROUTED WITH WIRE ASM-CHASSIS.
2. MOUNT LATCHES WITH TABS TOWARD CENTER OF DOOR.
1. TRIM LABEL AS NECESSARY.

FOR ELECTRICAL TORQUE SPECIFICATIONS SEE DWG NO. 128783-01-000

X-X FOR ELECTRICAL CALLOUTS SEE DWG NO. 121339-01-000

FIRST USED 07 P-SER

DO NOT SCALE DRAWING

TITLE: WIRING INSTL-FRONT END

SHEET 2 | PART NO 157298 | REV

DWG NO 157298

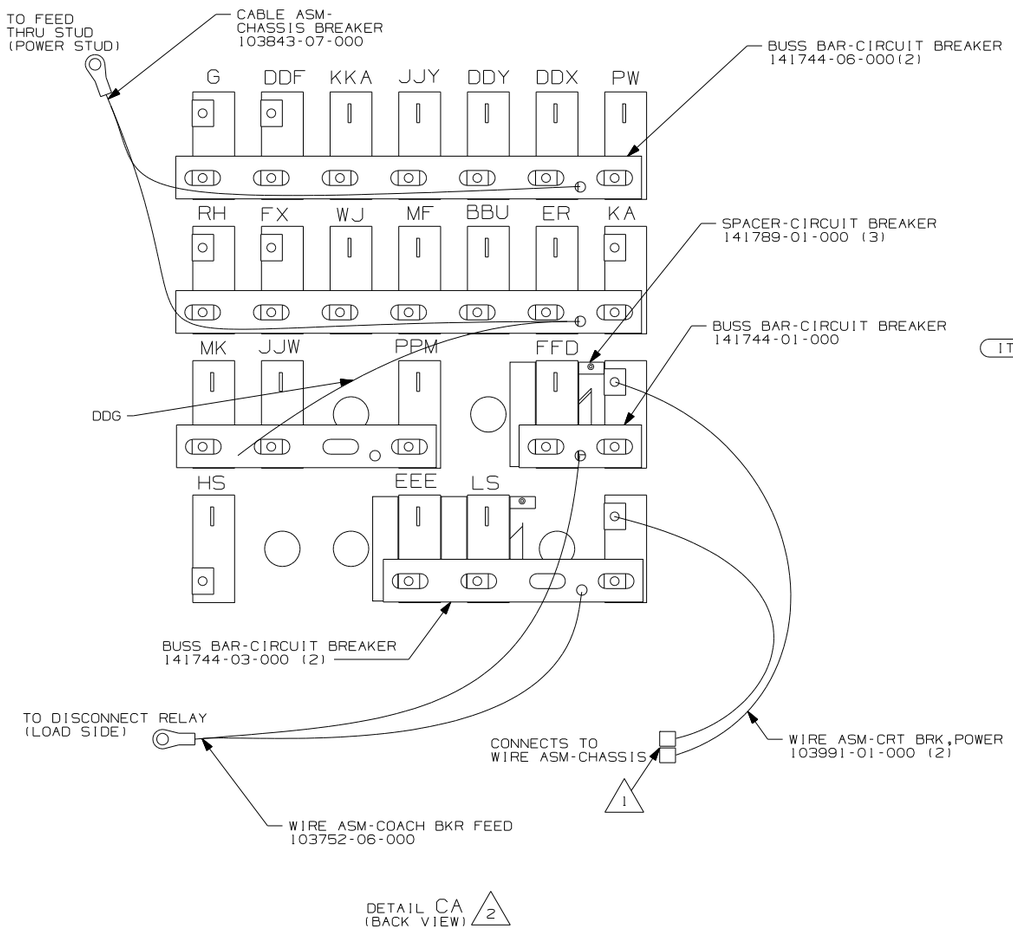

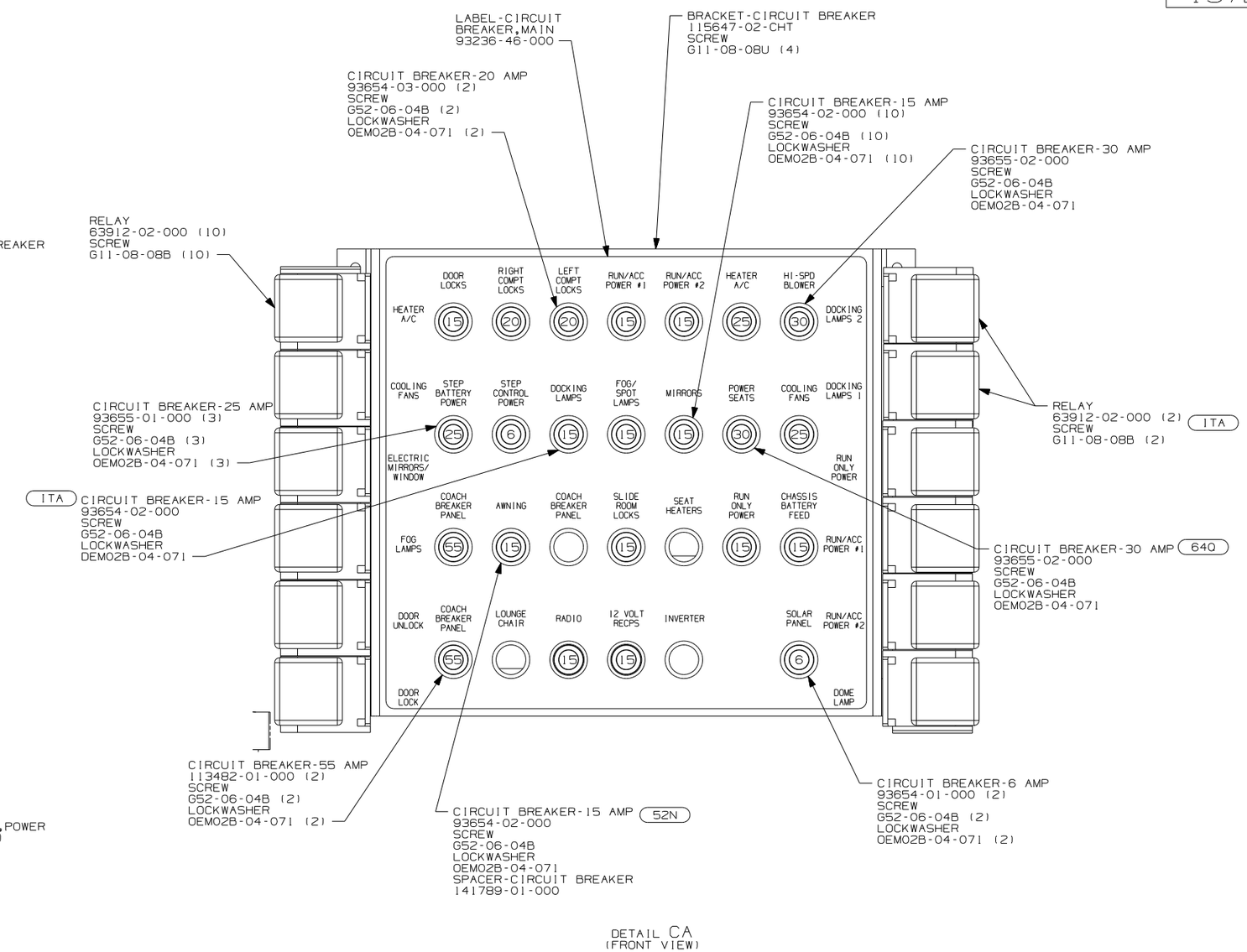

ITA ITASCA ONLY
64Q SEAT PED-6-WAY POWER DRIVER
40G POWER DOOR LOCK WITH REMOTE
52N AWNING - PATIO, ELECTRIC
265 CODES/STANDARDS-CSA/CMVSS
181 CODES/STANDARDS USA

181 265

2 CIRCUITS LABELED ON BREAKER ARE FROM WIRE ASM-IP,MAIN UNLESS OTHERWISE NOTED.

1 CONNECT HOUSINGS TOGETHER.

NOTES:

FOR ELECTRICAL TORQUE SPECIFICATIONS SEE DWG NO. 128783-01-000

X-X FOR ELECTRICAL CALLOUTS SEE DWG NO. 121339-01-000

FIRST USED 07 P-SER

DO NOT SCALE DRAWING

TITLE: WIRING INSTL-FRONT END

SHEET 3 PART NO 157298 REV

DWG NO 157298

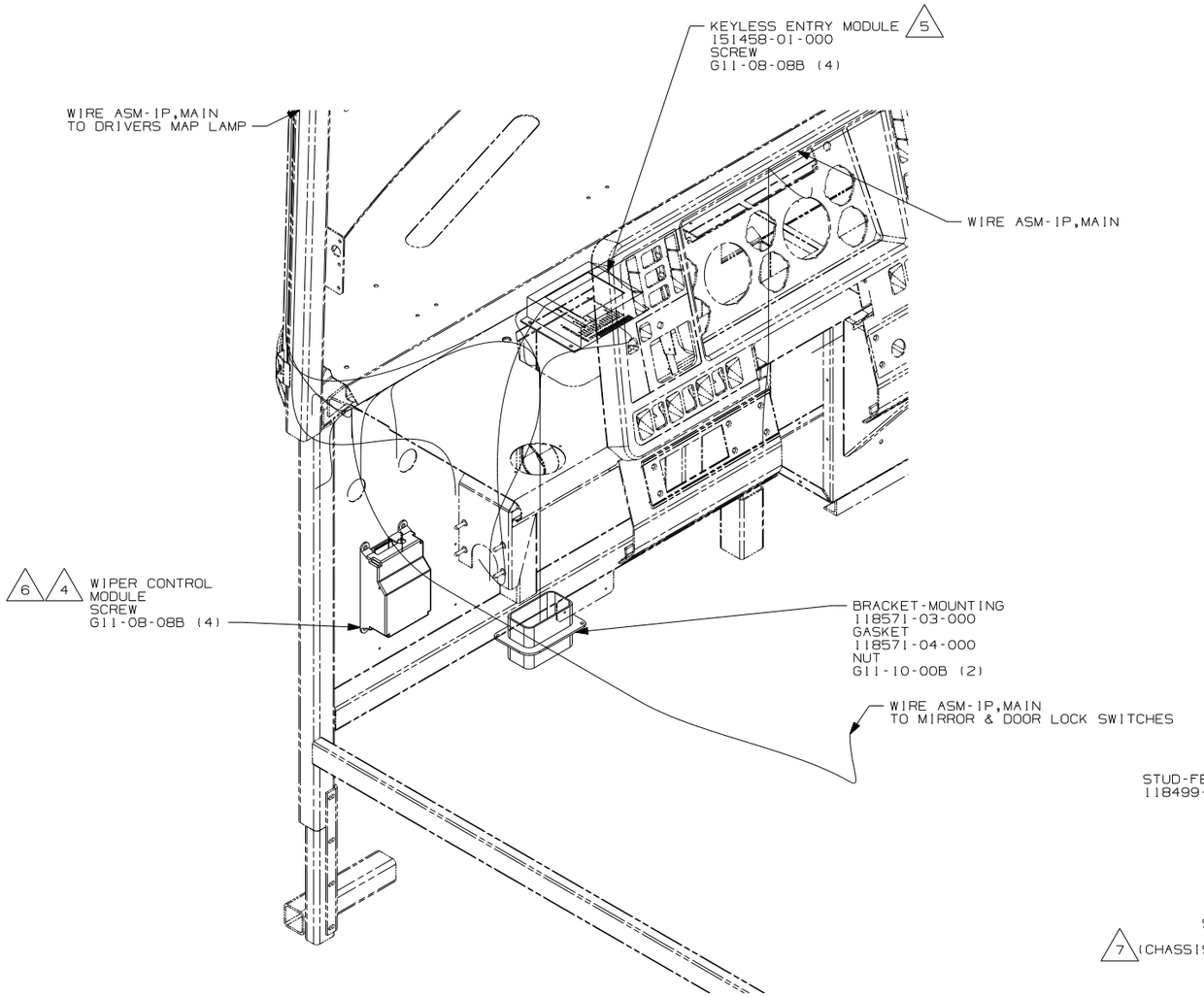

VIEW DA
(WINNEBAGO WIRING SHOWN)

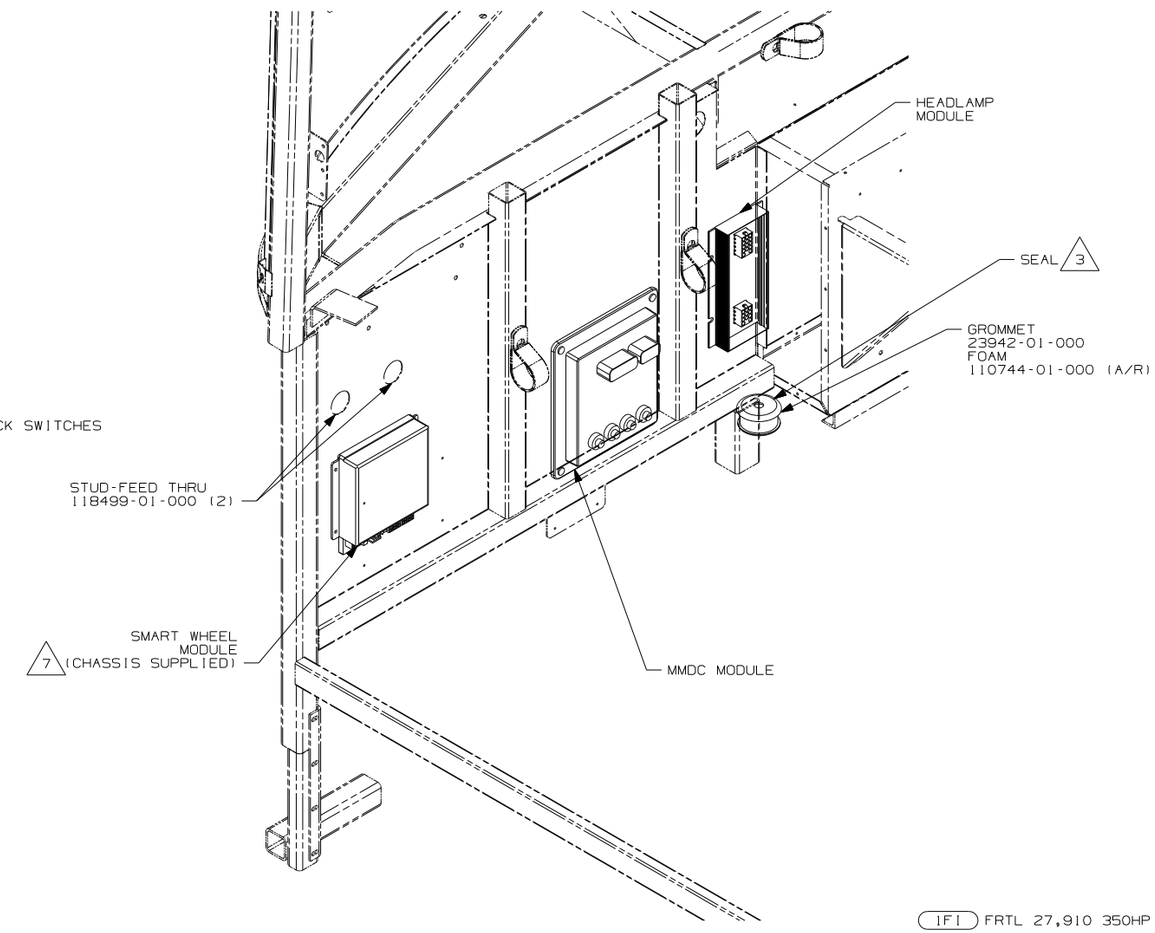

VIEW DA
(CHASSIS WIRING SHOWN)

NOTES:

1. BUNDLE AND SECURE ALL EXCESS WIRE.
2. DO NOT USE SEAT BELT 2 PIN HOUSING.
3. ROUTE PARK BRAKE VALVE AND AIR LINES FOR DASH GAUGES THRU HERE. COVER WITH CONVOLUTE TUBING 41953 WHERE VISIBLE.
4. SEE WIPER CONTROL INFORMATION FOR INSTALLATION INSTRUCTION.
5. MOUNT TO PLENUM PANEL AS SHOWN.
6. 2006 IFA CHASSIS & ALL 2007 CHASSIS
7. 2006 IFI OR ILC CHASSIS

IFI FRTL 27,910 350HP 7.2L 6SPD
ILC FRTL 29,410 350 7.2L 6 SPEED
IFA FRTL 27,910 300 5.9L 5-SP
265 CODES/STANDARDS-CSA/CMVSS
IBI CODES/STANDARDS USA

IBI 265

FOR ELECTRICAL TORQUE SPECIFICATIONS SEE DWG NO. 128783-01-000

X-X FOR ELECTRICAL CALLOUTS SEE DWG NO. 121339-01-000

FIRST USED 07 P-SER

DO NOT SCALE DRAWING

TITLE: WIRING INSTL-FRONT END

SHEET 4 PART NO 157298 REV

DWG NO 157298

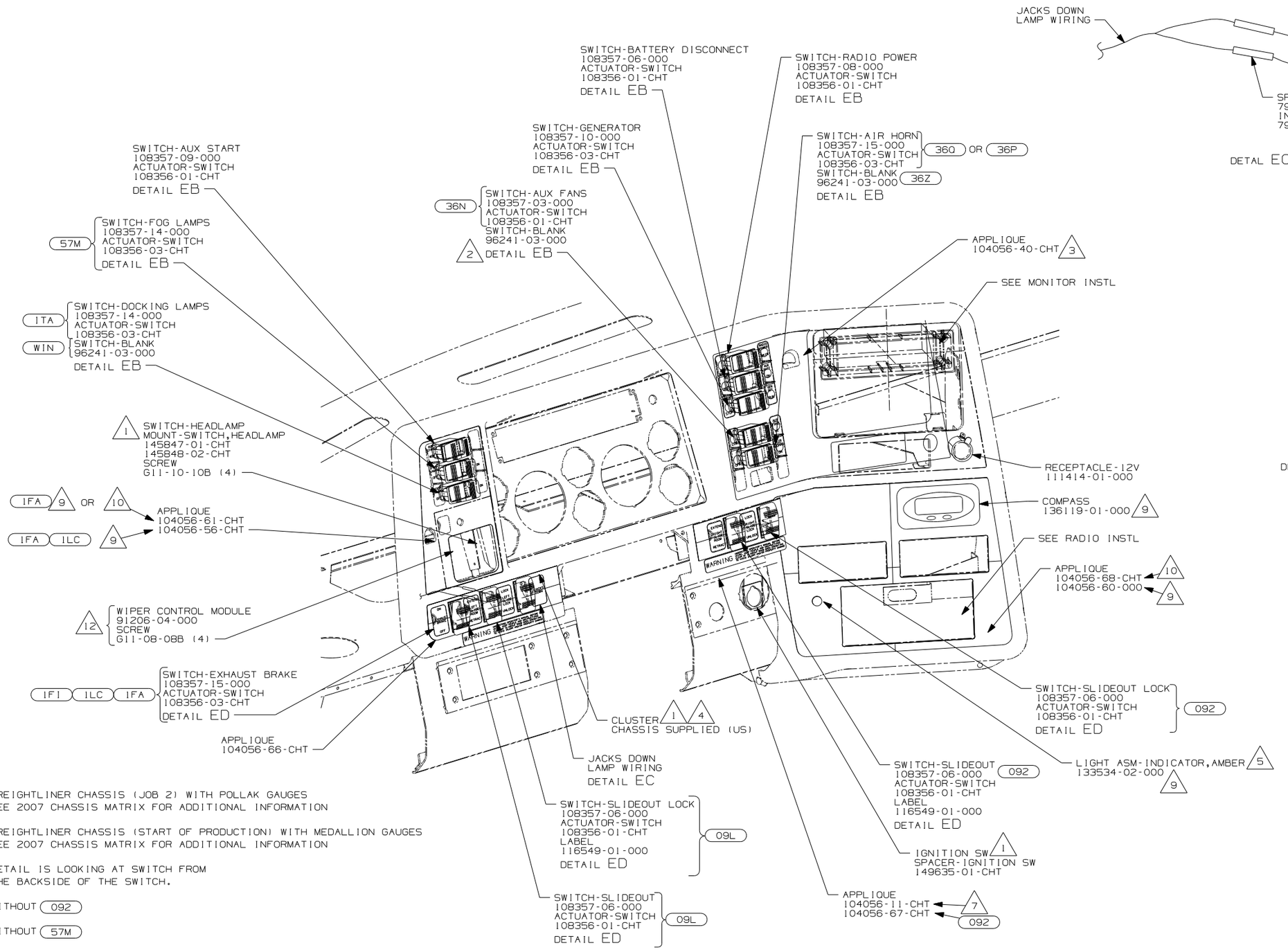

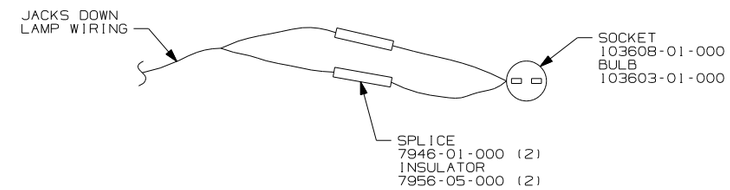

DETAL EC

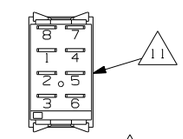

DETAIL ED 8

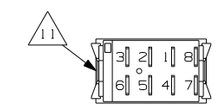

DETAIL EB 8

36P	AIR HORNS
57M	LAMPS-FOG
36Q	AIR HORNS-CHROME
36Z	AIR HORNS - WITHOUT
36N	FANS-DEFROSTER, AUXILIARY
1FI	FRTL 27,910 350HP 7.2L 6SPD
1LC	FRTL 29,410 350 7.2L 6 SPEED
1FA	FRTL 27,910 300 5.9L 5-SP
092	SLIDEOUT ROOM - FRONT RIGHT
09L	SLIDEOUT ROOM FRONT LEFT
WIN	WINNEBAGO ONLY
ITA	ITASCA ONLY
265	CODES/STANDARDS-CSA/CMVSS
1B1	CODES/STANDARDS USA

NOTES:

10. FREIGHTLINER CHASSIS (JOB 2) WITH POLLAK GAUGES WEE 2007 CHASSIS MATRIX FOR ADDITIONAL INFORMATION
9. FREIGHTLINER CHASSIS (START OF PRODUCTION) WITH MEDALLION GAUGES SEE 2007 CHASSIS MATRIX FOR ADDITIONAL INFORMATION
8. DETAIL IS LOOKING AT SWITCH FROM THE BACKSIDE OF THE SWITCH.
7. WITHOUT 092
6. WITHOUT 57M
5. CONNECT POSITIVE WIRE (YEL) TO TERMINAL MARKED WITH A "+"
4. SEE DETAIL GA FOR INSTRUMENT CLUSTER ASSEMBLY INSTRUCTIONS.
3. COVER CLEAR LEGEND ON BEZEL WITH FILM 77031-01-000 (BLANK).
2. WITHOUT 36N
1. CHASSIS SUPPLIED.

11. WITH SWITCH INSTALLED, THIS SIDE OF SWITCH WILL FACE LEFT SIDEWALL

FOR ELECTRICAL TORQUE SPECIFICATIONS SEE DWG NO. 128783-01-000

X-X FOR ELECTRICAL CALLOUTS SEE DWG NO. 121339-01-000

1B1 265

FIRST USED 07 P-SER

DO NOT SCALE DRAWING

TITLE: WIRING INSTL-FRONT END

SHEET 5 PART NO 157298 REV

DWG NO 157298

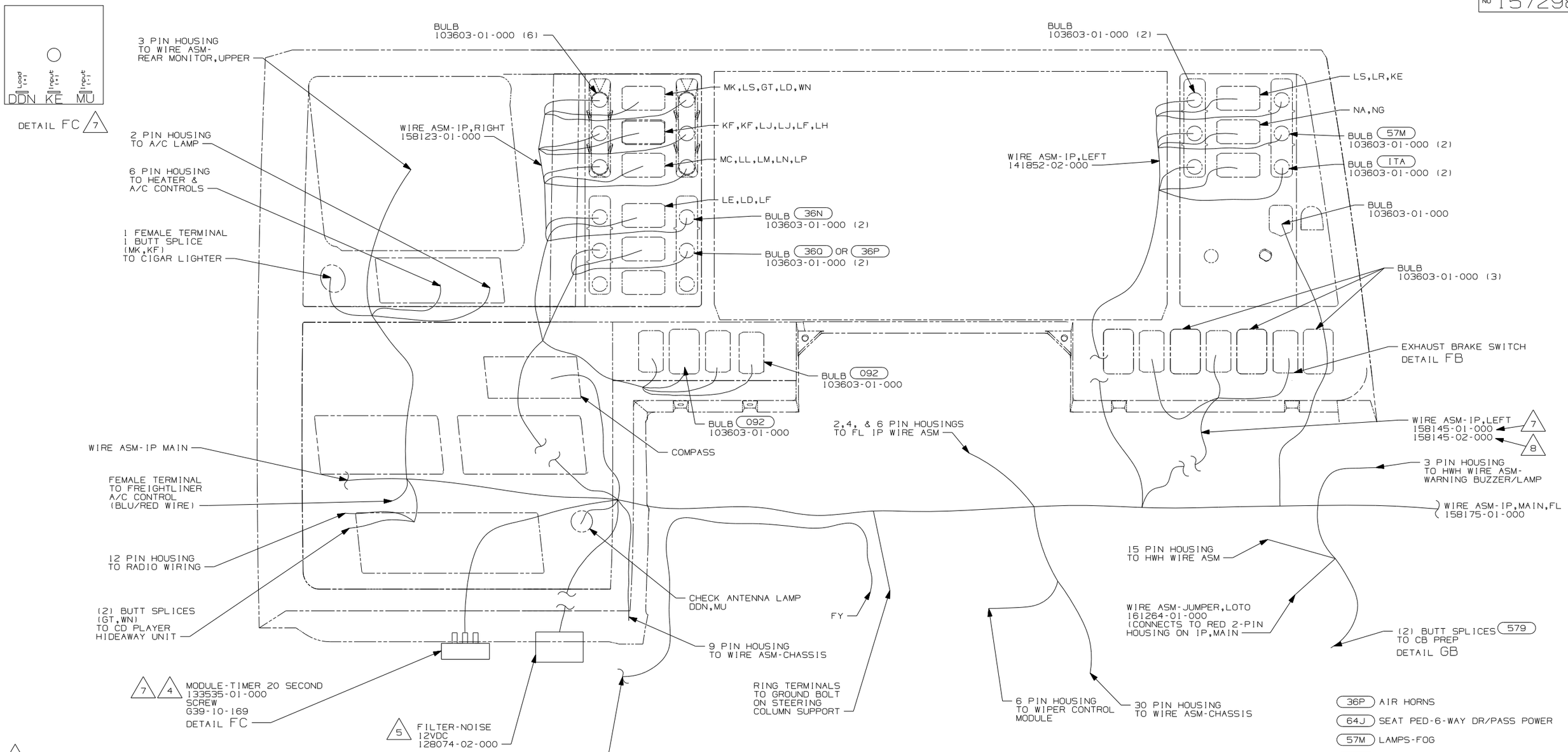

8 FREIGHTLINER CHASSIS (JOB 2) WITH POLLAK GAUGES SEE 2007 CHASSIS MATRIX FOR ADDITIONAL INFORMATION.

7 FREIGHTLINER CHASSIS (START OF PRODUCTION) WITH MEDALLION GAUGES SEE 2007 CHASSIS MATRIX FOR ADDITIONAL INFORMATION.

6. TAPE SLIDEROOM #3 SWITCH BACK INTO LOOM WITHOUT 092

5 MOUNT ON TOP LEFT REAR CORNER OF PANEL-COVER, RADIATOR.

4 MOUNT ON TOP LEFT REAR CORNER OF PANEL-COVER, RADIATOR.

3 UNHOUSE EXHAUST BRAKE SWITCH HOUSING ON CHASSIS IP WIRE ASM. THEN REHOUSE TERMINALS IN HOUSING AS SHOWN.

2 CUT TERMINALS OFF FL WIRE ASSEMBLY AND BUTT SPLICE.

1 CHASSIS SUPPLIED.

NOTES:

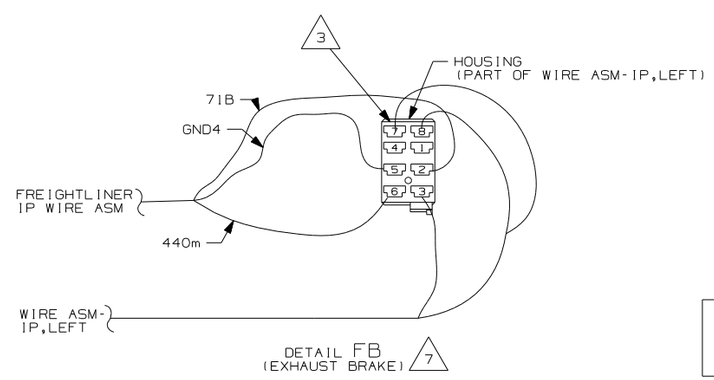

36P	AIR HORNS
64J	SEAT PED-6-WAY DR/PASS POWER
57M	LAMPS-FOG
40J	CB RADIO PREP
36Q	AIR HORNS-CHROME
36N	FANS-DEFROSTER, AUXILIARY
092	SLIDEOUT ROOM - FRONT RIGHT
ITA	ITASCA ONLY
265	CODES/STANDARDS-CSA/CMVSS
1B1	CODES/STANDARDS USA

FOR ELECTRICAL TORQUE SPECIFICATIONS SEE DWG NO. 128783-01-000

X-X FOR ELECTRICAL CALLOUTS SEE DWG NO. 121339-01-000

1B1 265

FIRST USED 07 P-SER

DO NOT SCALE DRAWING

TITLE: WIRING INSTL-FRONT END

SHEET 6 PART NO 157298 REV

DWG NO

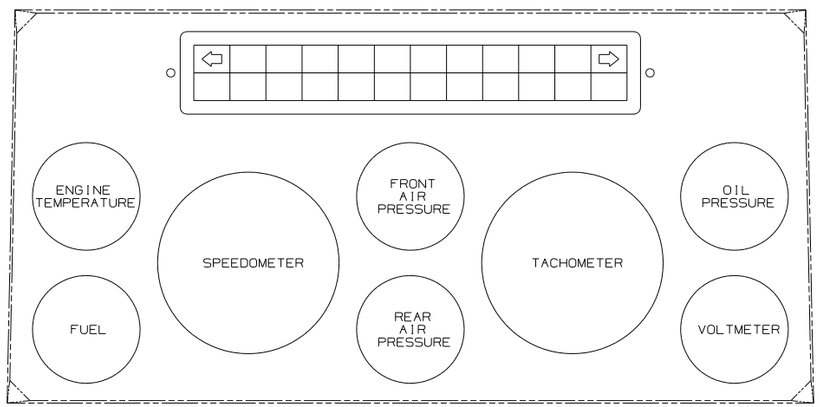

DETAIL GA (5)
(GUAGE LAYOUT)

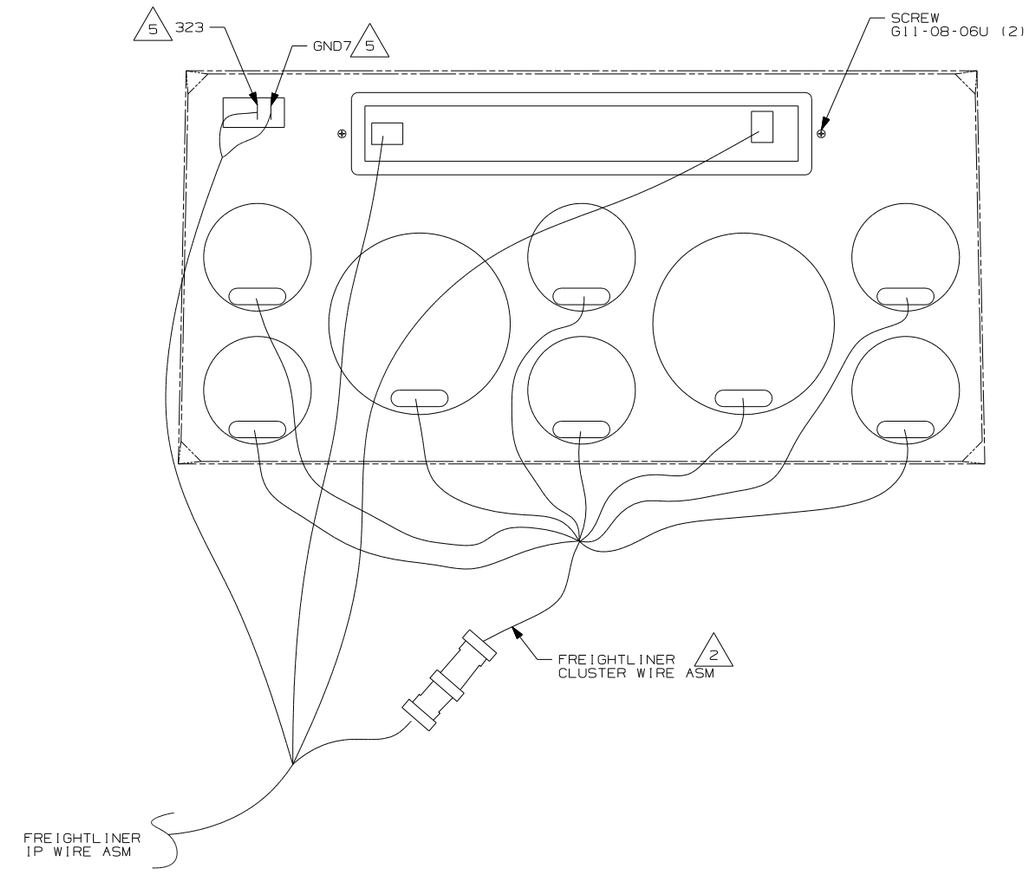

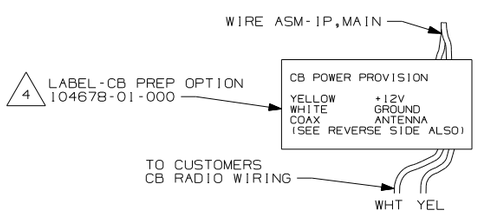

DETAIL GD (579)

NOTES:

1. ALL GAUGES, RETAINER CLIPS AND FASTENERS ARE CHASSIS SUPPLIED.
2. (2) ANY PLUG ON CLUSTER WIRE ASM WILL FIT ANY GAUGE.
3. (3) CONNECT RED FROM CONNECTOR TO YELLOW IN IP,MAIN AND BLK/RED TO WHITE.
4. (4) EDGE OF LABEL TO HANG JUST BELOW BOTTOM OF DASH.
5. (5) GUAGE LAYOUT IS SAME FOR BOTH MEDALLION AND POLLAK GAUGES
   POLLAK GAUGES DO NOT HAVE "TRIP RESET" BUTTON

(579) RADIO - CB WIRE PREP
(265) CODES/STANDARDS-CSA/CMVSS
(181) CODES/STANDARDS USA

FOR ELECTRICAL TORQUE SPECIFICATIONS SEE DWG NO. 128783-01-000

(X-X) FOR ELECTRICAL CALLOUTS SEE DWG NO. 121339-01-000

(181) (265)

FIRST USED: 07 P-SER

DO NOT SCALE DRAWING

TITLE: WIRING INSTL-FRONT END

SHEET 7 | PART NO 157298 | REV

DWG NO 157298

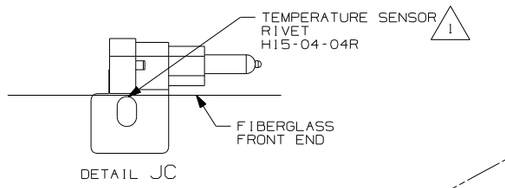

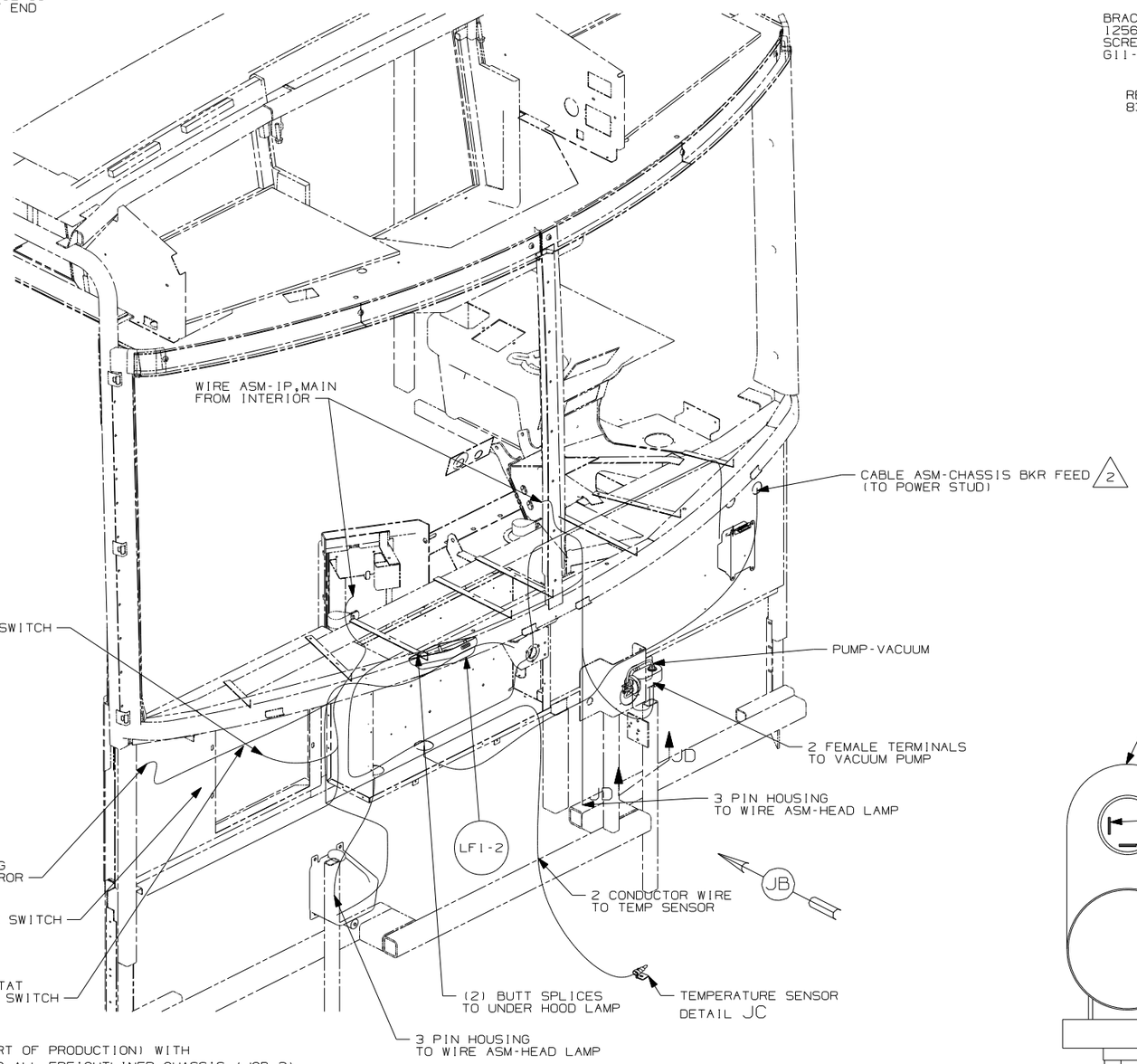

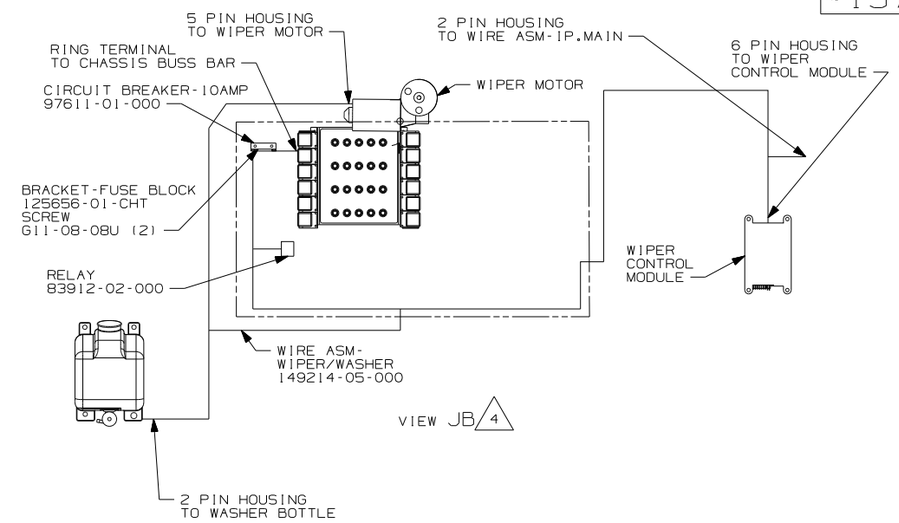

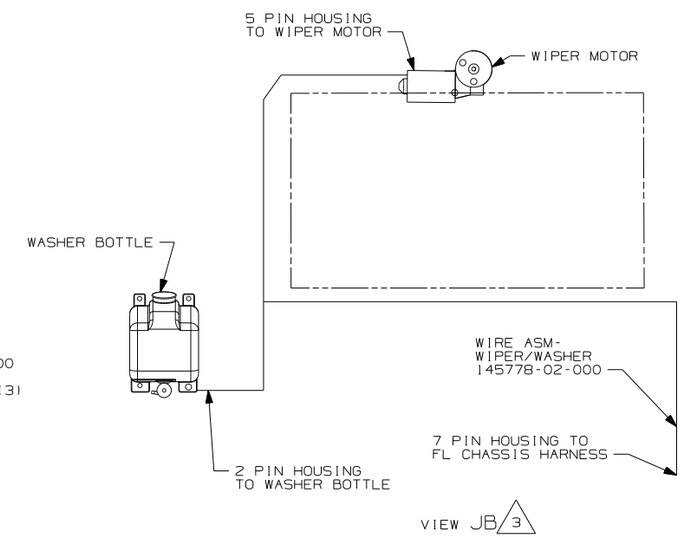

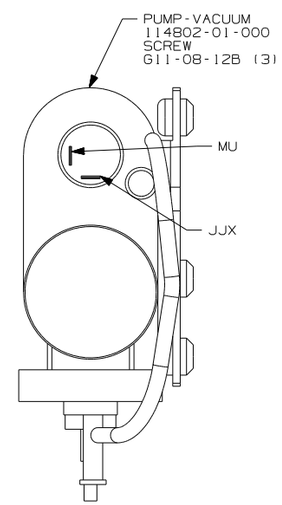

NOTES:

4. FREIGHTLINER CHASSIS (START OF PRODUCTION) WITH MEDALLION GAUGES (1F1) AND ALL FREIGHTLINER CHASSIS (JOB 2) WITH POLLAK GUAGES. SEE 2007 CHASSIS MATRIX FOR ADDITIONAL INFORMATION

3. FREIGHTLINER CHASSIS (START OF PRODUCTION) WITH MEDALLION GAUGES 1F1 OR 1LC ONLY SEE 2007 CHASSIS MATRIX FOR ADDITIONAL INFORMATION

2. SEE SHEET 2 FOR ADDITIONAL INFORMATION.

1. DRILL 4.8 DIA HOLE AND MOUNT ON LOWER FLANGE OF FRONT END.

(1FA) FRTL 27,910 300 5.9L 5-SP
(1LC) FRTL 29,410 350 7.2L 6 SPEED
(1F1) FRTL 27,910 350HP 7.2L 6SPD
(28X) MIRRORS-EXTERIOR W/DEFROST
(265) CODES/STANDARDS-CSA/CMVSS
(1B1) CODES/STANDARDS USA

(1B1) (265)

FOR ELECTRICAL TORQUE SPECIFICATIONS SEE DWG NO. 128783-01-000

(X-X) FOR ELECTRICAL CALLOUTS SEE DWG NO. 121339-01-000

FIRST USED: 07 P-SER

DO NOT SCALE DRAWING

TITLE: WIRING INSTL-FRONT END

SHEET 8 | PART NO 157298 | REV

DRAWING NO.	MODEL	SHEET
156354-01	R & S SERIES	1,5
156354-02	P-SERIES	2,5

RELEASE	REV A	DATE	DWG NO 156354
REV	ZONE	REVISION RECORD	DATE / DFTR-ORIG

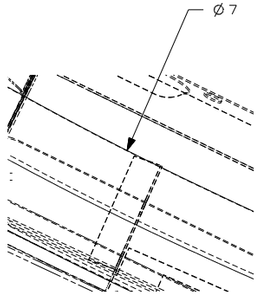

DETAIL AA
(TOP VIEW)

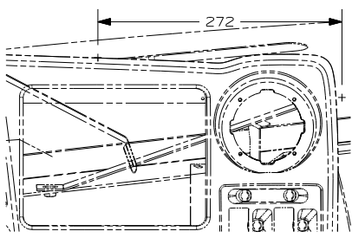

DETAIL AA

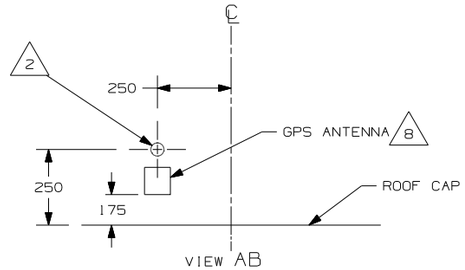

VIEW AB

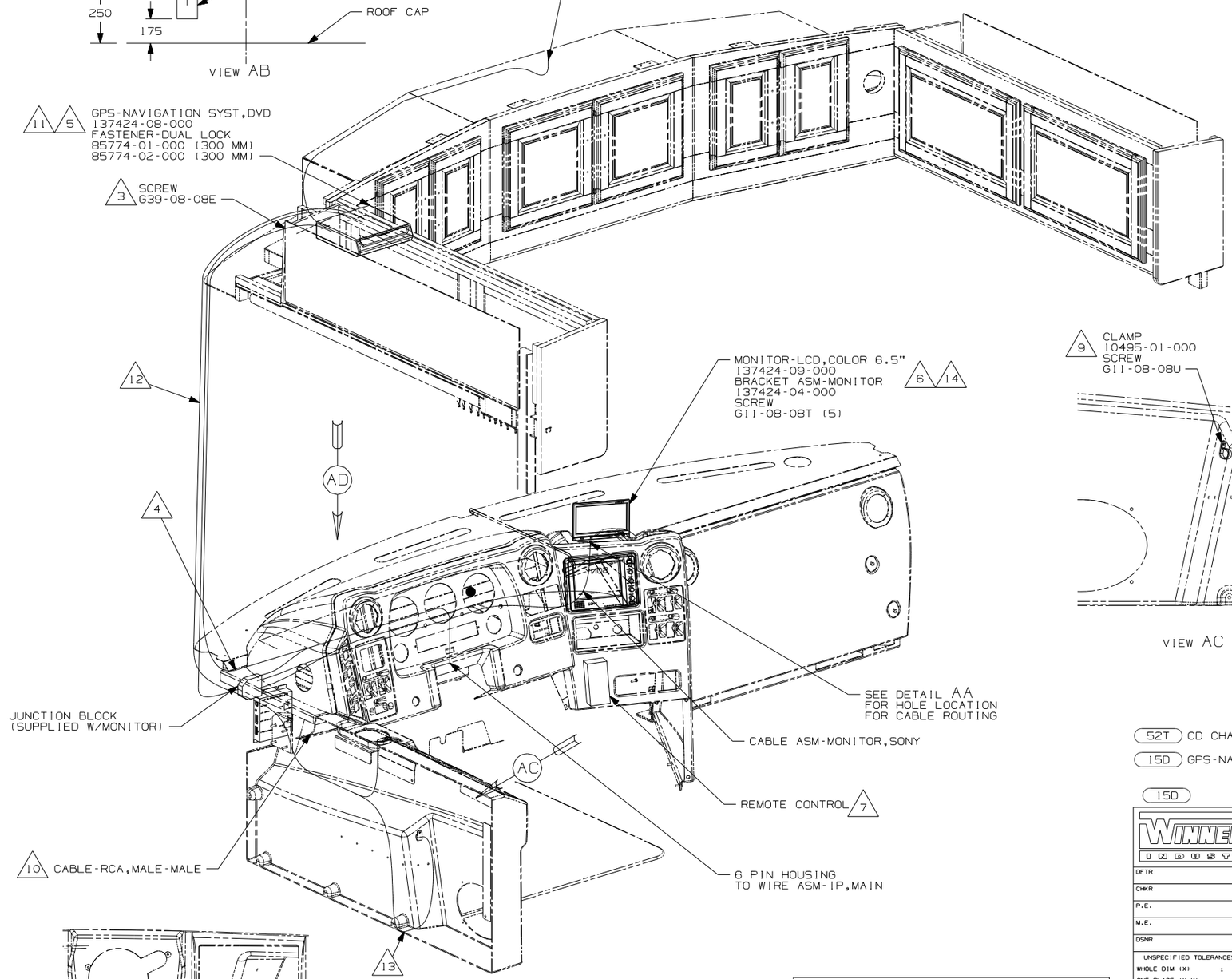

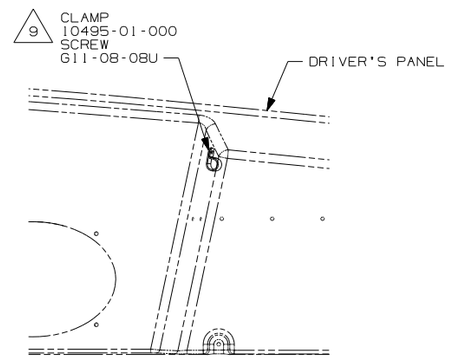

VIEW AC

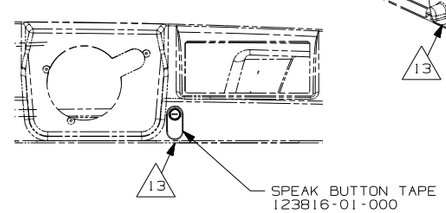

VIEW AD

14 SAVE MICROPHONE CABLE TO BE PUT IN INFOCASE.

13 DRILL 4MM NOTCH IN PANEL TO PREVENT WIRES FROM BEING PINCHED IF NECESSARY.

12 ROUTE MICROPHONE/SPEAK BUTTON CABLE DOWN A-POST BEHIND DRIVER'S PANEL.

11 MOUNT GPS-NAVIGATION SYST. IN OVERHEAD AS FAR TO THE LEFT AS POSSIBLE. WITH (52T) MOUNT GPS-NAVIGATION SYST. TO THE RIGHT OF THE CD CHANGER AS FAR TO THE LEFT AS POSSIBLE.

10 S-SERIES ONLY

9 MOUNT CLAMP WITH SCREW THRU ONE SIDE SO WIRES CAN BE REMOVED. COIL MICROPHONE CABLE IN CLAMP.

8 CLEAN ROOF & ANTENNA AND USE TAPE-FOAM,DBL 076322-05 TO ATTACH ANTENNA TO ROOF.

7 MOUNT REMOTE WITH WITH SUPPLIED BRACKET AND SCREWS.

6 MOUNT MONITOR SO IT IS CENTERED IN RECESSED AREA ON DASH.

5 LOAD MAP DVD INTO PLAYER AND SAVE DVD CASE AND DOCUMENTATION WITH OWNER'S MANUAL.

4 SEE SHEET 5 FOR SPLICING INFORMATION.

3 PULL BLACK WIRE FROM LOOM AND SCREW TO STEEL SIDE-PANEL OF OVHD.

2 DRILL 15MM HOLE IN FIBERGLASS ROOF CAP AND SLIDE ANTENNA WIRE INTO GROMMET AND SEAL.

1 AV INTERFACE UNIT COMES WITH MONITOR-LCD,COLOR 6.5"

NOTES:

(52T) CD CHANGER-10 DISC

(15D) GPS-NAVIGATION SYSTEM

(15D)

X-X FOR ELECTRICAL CALLOUTS SEE DWG NO. 121339-01-000

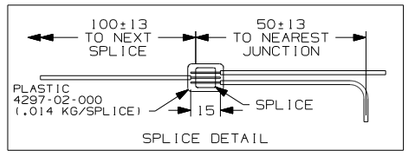

SPLICE DETAIL

DFTR	ORIG. DATE
CHKR	ALL DIMENSIONS ARE IN MILLIMETERS
P.E.	
M.E.	FIRST USED 07 R&S-SER
DSNR	
UNSPECIFIED TOLERANCES ARE: WHOLE DIM (X) : ONE-PLACE (X.X) : TWO-PLACE (X.XX) : ANGLE :	MATERIAL:
THIRD ANGLE PROJECTION	

DO NOT SCALE DRAWING

TITLE: WIRING INSTL-GPS

SHEET 1 OF 3 | PART NO 156354 | REV

DWG NO 156354

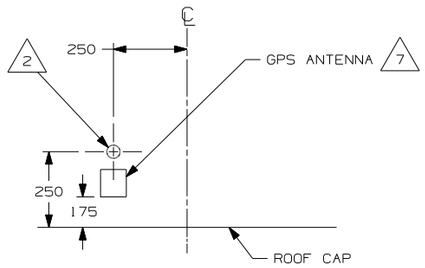

VIEW BB

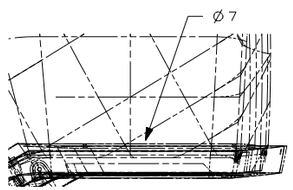

DETAIL BA
(TOP VIEW)

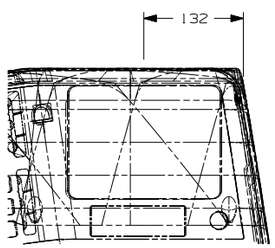

DETAIL BA

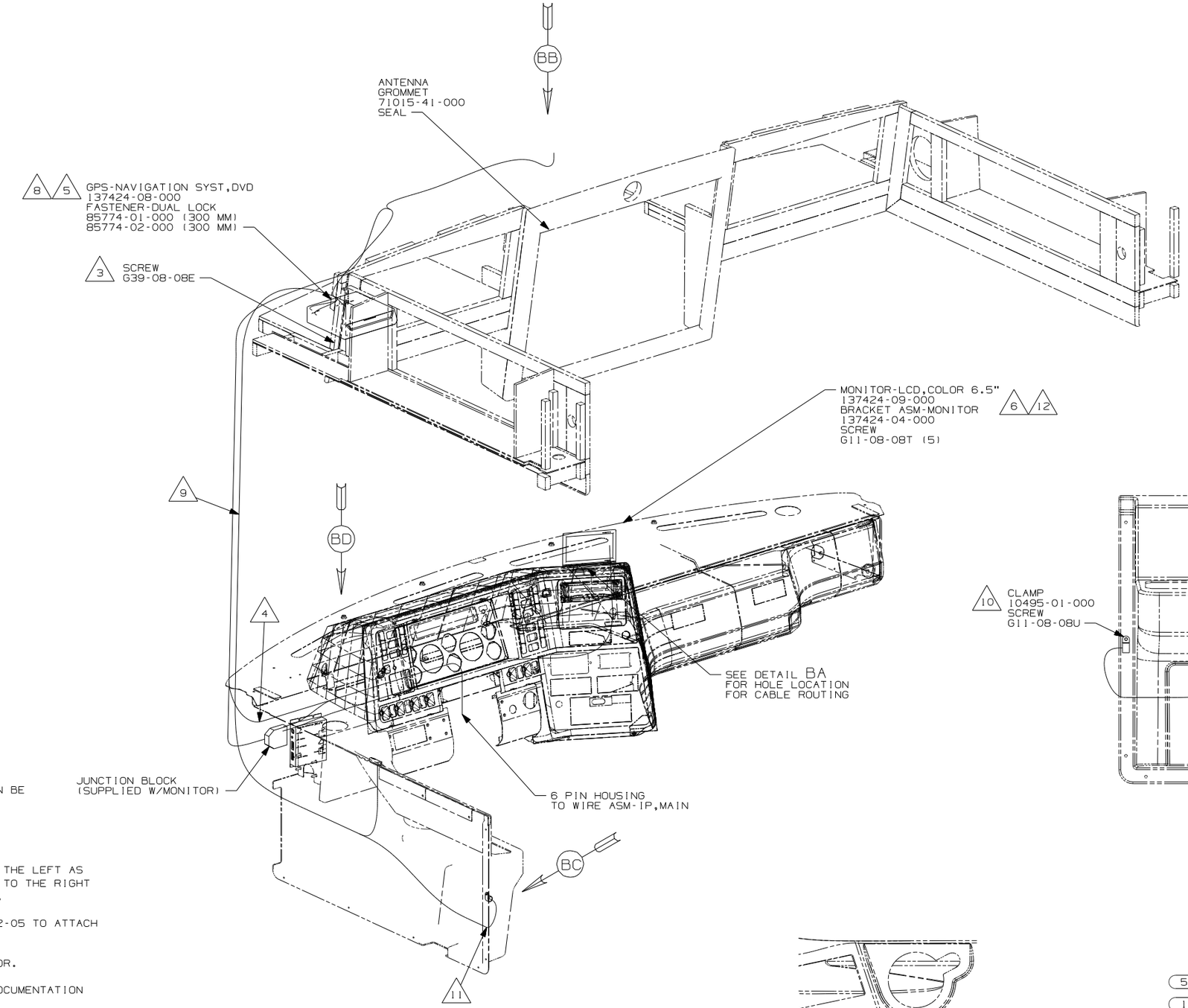

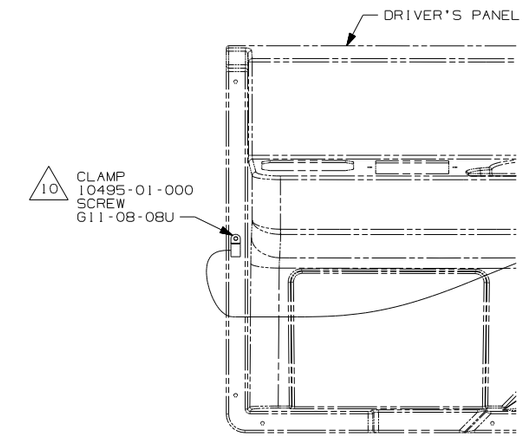

VIEW BC

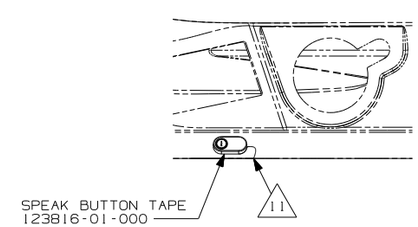

VIEW BD

12 SAVE MICROPHONE CABLE TO BE PUT IN INFOCASE.

11 DRILL 4MM NOTCH IN PANEL TO PREVENT WIRES FROM BEING PINCHED IF NECESSARY.

10 MOUNT CLAMP WITH SCREW THRU ONE SIDE SO WIRES CAN BE REMOVED. COIL MICROPHONE CABLE IN CLAMP.

9 ROUTE MICROPHONE/SPEAK BUTTON CABLE DOWN A-POST AND BEHIND DRIVER'S PANEL

8 MOUNT GPS-NAVIGATION SYST. IN OVERHEAD AS FAR TO THE LEFT AS POSSIBLE. WITH (52T) MOUNT GPS-NAVIGATION SYST. TO THE RIGHT OF THE CD CHANGER AS FAR TO THE LEFT AS POSSIBLE.

7 CLEAN ROOF & ANTENNA AND USE TAPE-FOAM,DBL 076322-05 TO ATTACH ANTENNA TO ROOF.

6 MOUNT MONITOR SO IT IS CENTERED ABOVE REAR MONITOR.

5 LOAD MAP DVD INTO PLAYER AND SAVE DVD CASE AND DOCUMENTATION WITH OWNER'S MANUAL.

4 SEE SHEET 5 FOR SPLICING INFORMATION.

3 PULL BLACK WIRE FROM LOOM AND SCREW TO STEEL SIDE-PANEL OF OVHD.

2 DRILL 15MM HOLE IN FIBERGLASS ROOF CAP AND SLIDE ANTENNA WIRE INTO GROMMET AND SEAL.

1 AV INTERFACE UNIT COMES WITH MONITOR-LCD,COLOR 6.5"

NOTES:

(52T) CD CHANGER-10 DISC

(15D) GPS-NAVIGATION SYSTEM

(15D)

FIRST USED	07 P-SER
	DO NOT SCALE DRAWING
TITLE:	WIRING INSTL-GPS
SHEET 2	PART NO 156354 REV

DWG NO 156354

GPS CIRCUIT	FUNCTION	WIN CIRCUIT
YELLOW	BATTERY (+)	MK
BLACK	GROUND	GGV
RED	IGNITION (+)	LD
WHITE/BLUE	ILLUMINATION (+)	MM
ORANGE/WHITE	REVERSE LIGHTS (+)	NOT USED
GREEN/WHITE	VEHICLE SPEED SENSOR (VSS)	GGW
YELLOW/BLUE	PARKING BRAKE (-)	GGV
PINK/SKY BLUE	IN-INT INTERUPT (-) (AUDIO MUTE)	(NOT USED)
YELLOW/BLACK	FOOT BRAKE (+)	(NOT USED)
WHITE/BROWN	REMOTE	(NOT USED)

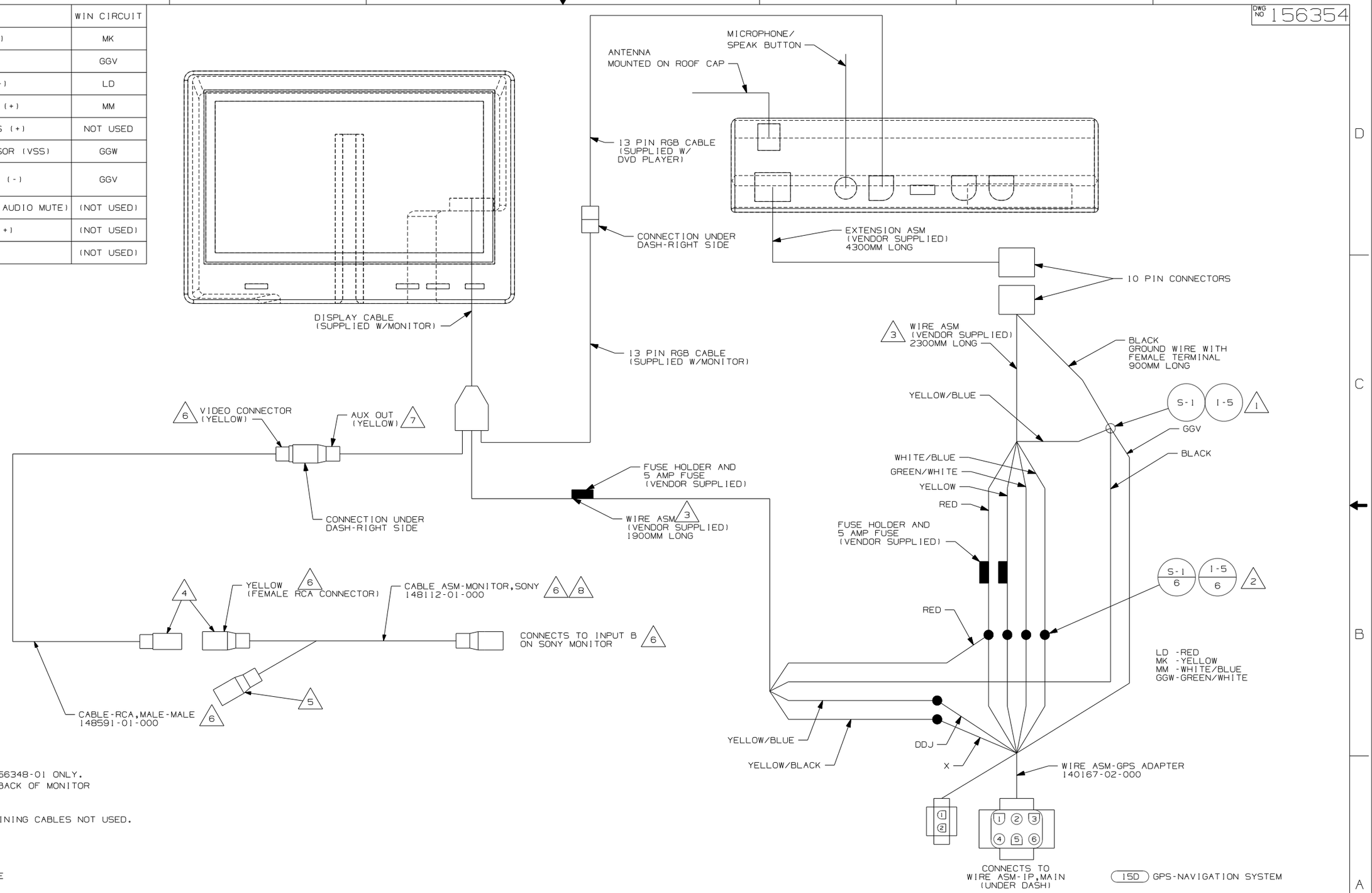

NOTES:

8. FOR USE WITH MONITOR INSTL 156348-01 ONLY. PLUG RCA INPUT CONNECTOR TO BACK OF MONITOR ON 156348-02.
7. RCA CABLES ARE LABELED. REMAINING CABLES NOT USED.
6. USED ON THE S SERIES ONLY.
5. WHITE CONNECTOR IS NOT USED. TAPE BACK INTO LOOM WITH TAPE 8363-01-000.
4. CONNECT TOGETHER
3. CUT WIRE ASM TO AVOID EXCESS WIRE BUNDLING AND TAPE UNUSED WIRES.
2. CUT TERMINALS FROM VENDOR SUPPLIED WIRES AND SPLICE AS SHOWN.
1. CUT RING TERMINAL FROM BLACK WIRE AND SPLICE AS SHOWN.

X-X FOR ELECTRICAL CALLOUTS SEE DWG NO. 121339-01-000

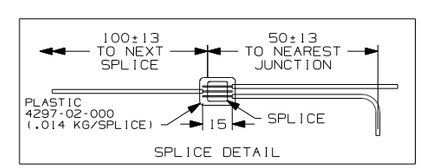

SPLICE DETAIL

15D GPS-NAVIGATION SYSTEM

15D

FIRST USED 07 R&S-SER

DO NOT SCALE DRAWING

TITLE: WIRING INSTL-GPS

SHEET 3 PART NO 156354 REV

DWG NO	SHEET	DESCRIPTION
133004-01	1	2TK,DIG VOLT
133004-02	2	2T,DIG VOLT,SOLAR
133004-03	3	2TK, W/SOL & PAN
133004-04	4	2TK, W/O WAT HEAT
133004-05	5,6,7	2T,SOLAR/SENSOR

RELEASE	REV A	DATE	DWG NO 133004
REV	ZONE	REVISION RECORD	DATE / DFTR-ORIG

PIN #
1. 16 RED GENERATOR METER (+)
2. 16 YEL GENERATOR START
3. 16 GRN GENERATOR STOP
4. 16 BLK GENERATOR)-)

HOUSING-AMP
(UNIVERSAL MATE-N-LOK)
1-480702-0
CONTACT-PIN
350538-1

PIN #
1. 14 BLK (HOUSE +12VDC)
2. 14 (CHASSIS +12VDC)
3. 14 WHT (GROUND)
4. 20 RED (WATER TANK)
5. 20 BRN (BLACK TANK)
6. 20 GRY (GRAY TANK)
7. 12 RED/WHT (REMOTE WATER PUMP SWITCH)
8. 12 RED (WATER PUMP SWITCH)
9. 12 WHT/RED (REMOTE WATER PUMP)
10. BLANK
11. BLANK
12. 20 WHT/GRN (LP TANK SENSOR)
13. 16 YEL (WATER HEATER IGNITION)
14. BLANK
15. 20 WHT/BLU (WATER HEATER INDICATOR)

HOUSING-AMP
(UNIVERSAL MATE-N-LOK)
1-480710-0
CONTACT-PIN
350538-1

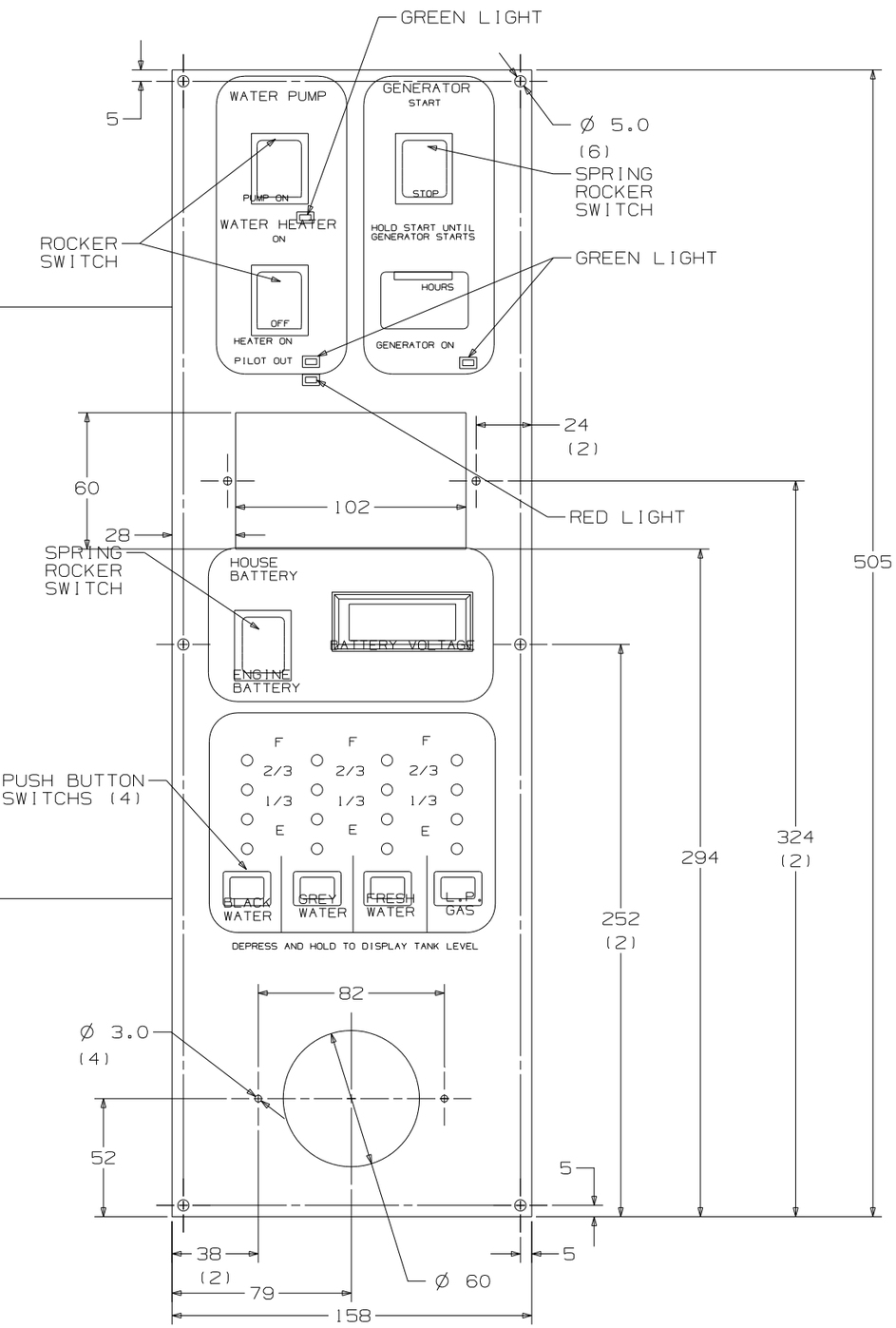

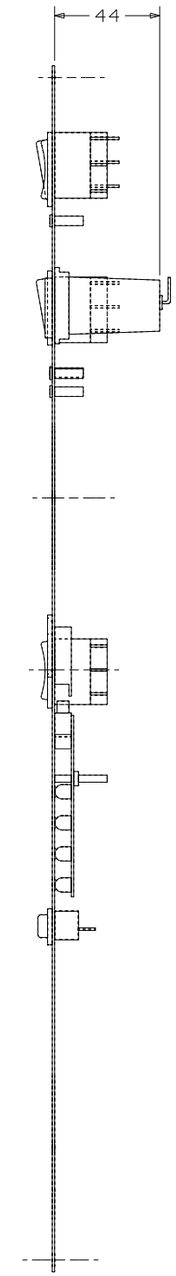

5. SWITCH RATING SHALL BE EMBOSSED ON THE SIDE OF THE 12V SWITCHES.
4. CUTOUT FOR PANEL TO BE 135 X 350 MIN/ 140 X 380 MAX.
3. LETTERS ON MAIN HEADING TO BE 5MM HIGH.
2. BLACK PANEL WITH WHITE GRAPHICS.
1. SUGGESTED VENDOR: VENLINE.

NOTES:

SEE CHART
FOR COLOR VARIATIONS OF THIS PART

WINNEBAGO INDUSTRIES

DFTR	ORIG. DATE
CHKR	ALL DIMENSIONS ARE IN MILLIMETERS
P.E.	
M.E.	FIRST USED
DSNR	STANDARDS

UNSPECIFIED TOLERANCES ARE:
WHOLE DIM (X) : 1
ONE-PLACE (X.X) :
TWO-PLACE (X.XX) :
ANGLE :

MATERIAL:

THIRD ANGLE PROJECTION

DO NOT SCALE DRAWING

TITLE: PANEL-MONITOR

SHEET 1 OF 7 | PART NO 133004

REF: 1

DWG NO 133004

PIN #
1. 16 RED GENERATOR METER (+)
2. 16 YEL GENERATOR START
3. 16 GRN GENERATOR STOP
4. 16 BLK GENERATOR)-)

HOUSING-AMP
(UNIVERSAL MATE-N-LOK)
1-480702-0
CONTACT-PIN
350538-1

PIN #
1. 14 BLK (HOUSE +12VDC)
2. 14 (CHASSIS +12VDC)
3. 14 WHT (GROUND)
4. 20 RED (WATER TANK)
5. 20 BRN (BLACK TANK)
6. 20 GRY (GRAY TANK)
7. 12 RED/WHT (REMOTE WATER PUMP SWITCH)
8. 12 RED (WATER PUMP SWITCH)
9. 12 WHT/RED (REMOTE WATER PUMP)
10. BLANK
11. BLANK
12. 20 WHT/GRN (LP TANK SENSOR)
13. 16 YEL (WATER HEATER IGNITION)
14. BLANK
15. 20 WHT/BLU (WATER HEATER INDICATOR)

HOUSING-AMP
(UNIVERSAL MATE-N-LOK)
1-480710-0
CONTACT-PIN
350538-1

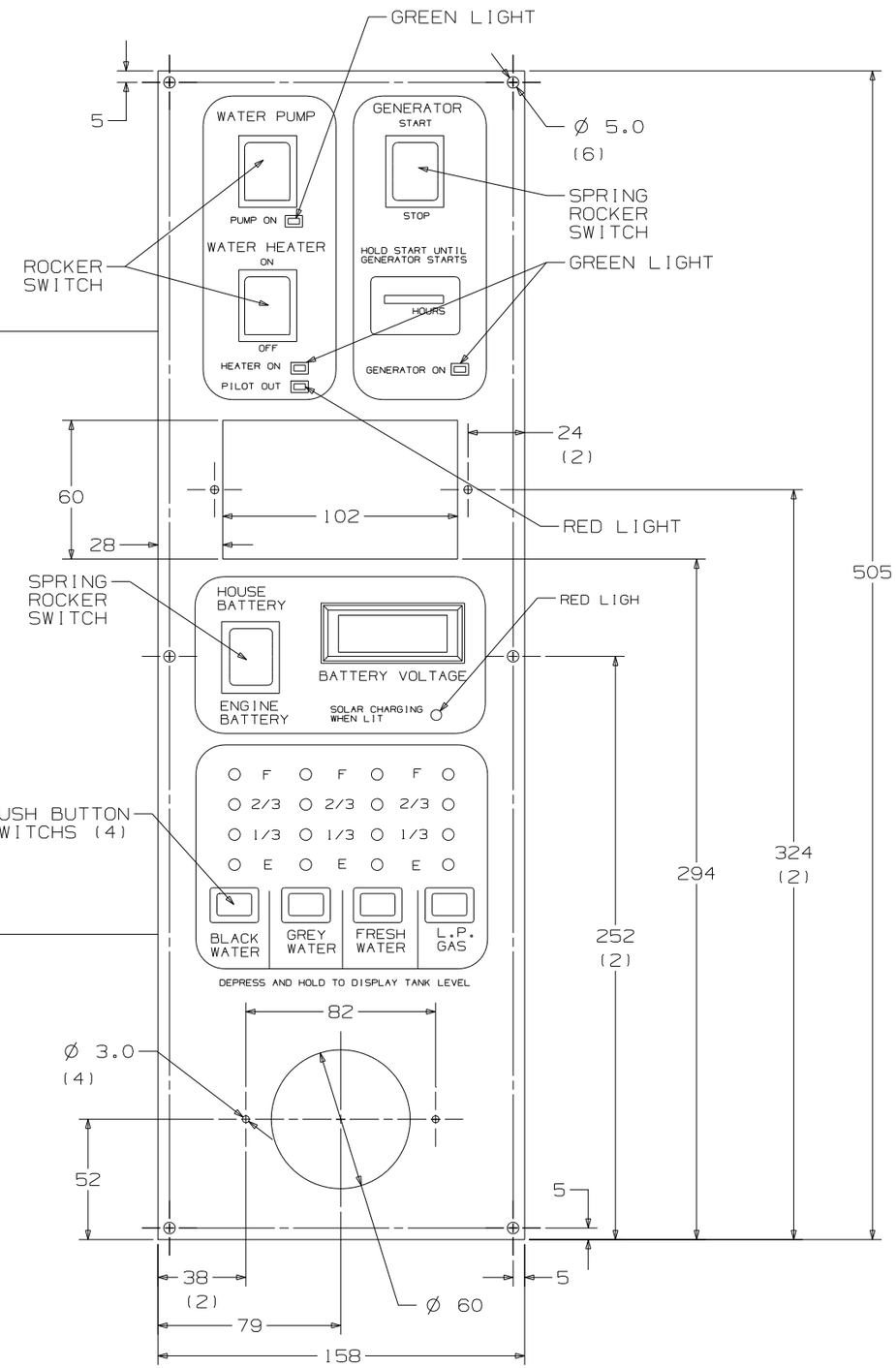

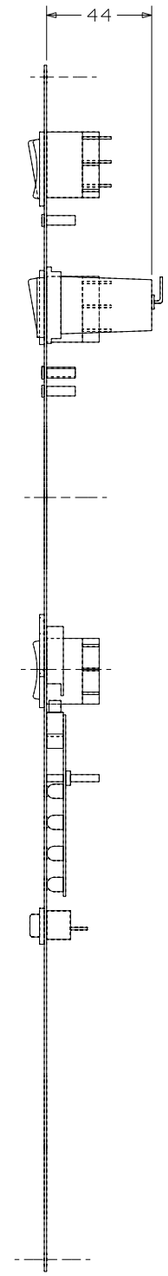

FIRST USED	STANDARDS
	DO NOT SCALE DRAWING
TITLE:	PANEL-MONITOR
SHEET 2	PART NO 133004

DWG NO 133004

PIN #
1. 16 RED GENERATOR METER (+)
2. 16 YEL GENERATOR START
3. 16 BRN GENERATOR STOP
4. 16 BLK GENERATOR (-)

HOUSING-AMP
(INIVERSAL MATE-N-LOK)
1-480702-0
CONTACT-PIN
350538-1

PIN #
1. 14 BLK (HOUSE +12VDC)
2. 14 (CHASSIS +12VDC)
3. 14 WHT (GROUND)
4. 20 RED (WATER TANK)
5. 20 BRN (BLACK TANK)
6. 20 GRY (GRAY TANK)
7. 12 RED/WHT (REMOTE WATER PUMP SWITCH)
8. 12 RED (WATER PUMP SWITCH
9. 12 WHT/RED (REMOTE WATER PUMP)
10. BLANK
11. BLANK
12. 20 WHT/GRN (LP TANK SENSOR)
13. 16 YEL (WATER HEATER IGNITION)
14. BLANK
15. 20 WHT/BLU (WATER HEATER INDICATOR)

HOUSING-AMP
(INIVERSAL MATE-N-LOK)
1-480710-0
CONTACT-PIN
350538-1

HOUSING-AMP
(UNIVERSAL-MATE-N-LOK)
1-480698-0
PIN
350538-0

PIN #
1. 16 BLK
2. 16 RED

HOUSING-AMP
(UNIVERSAL-MATE-N-LOK)
1-480699-0
PIN
350537-0

PIN #
1. 16 GRN
2. 16 RED

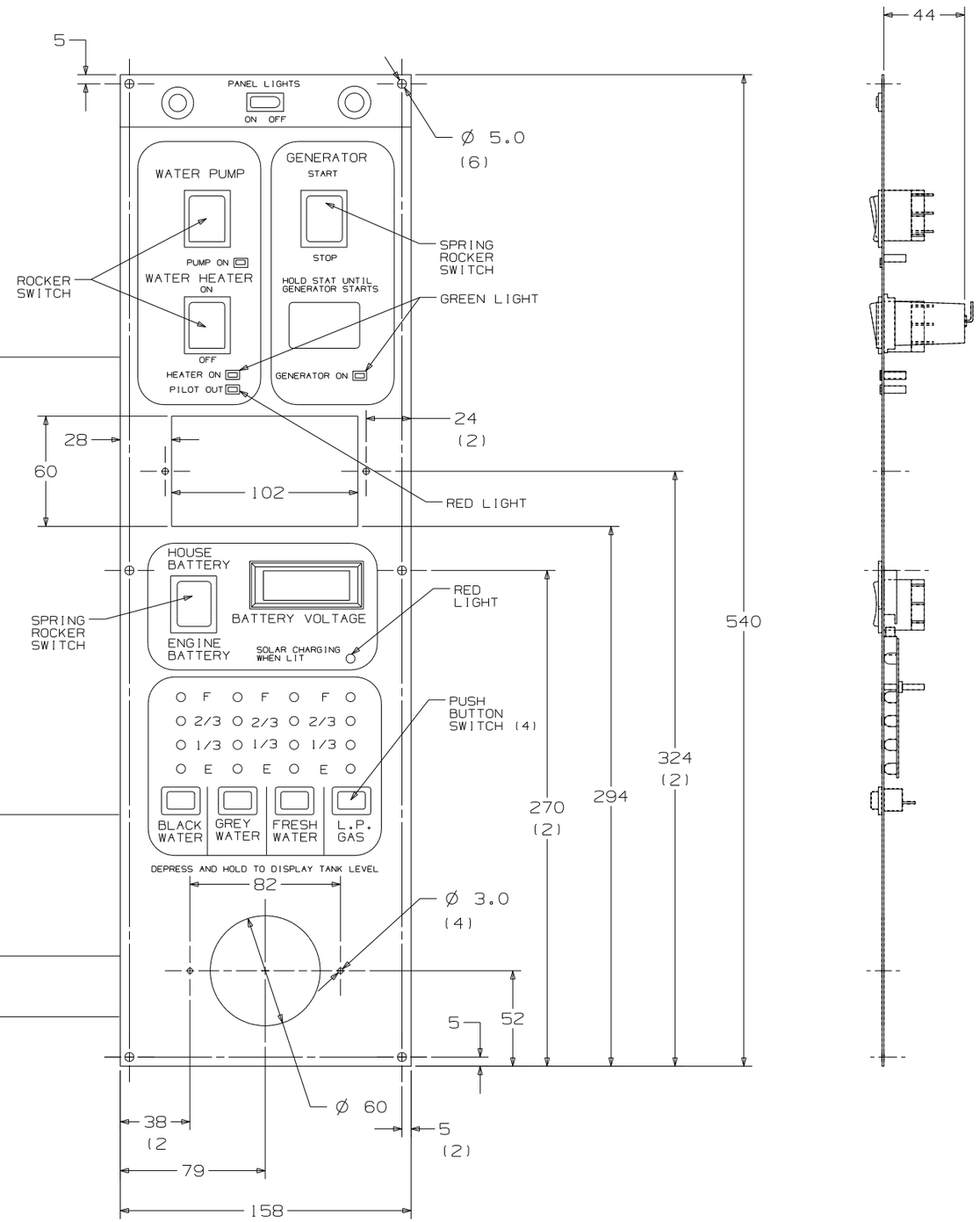

FIRST USED	STANDARD
	DO NOT SCALE DRAWING
TITLE:	PANEL-MONITOR
SHEET 3	PART NO 133004

DWG NO 133004

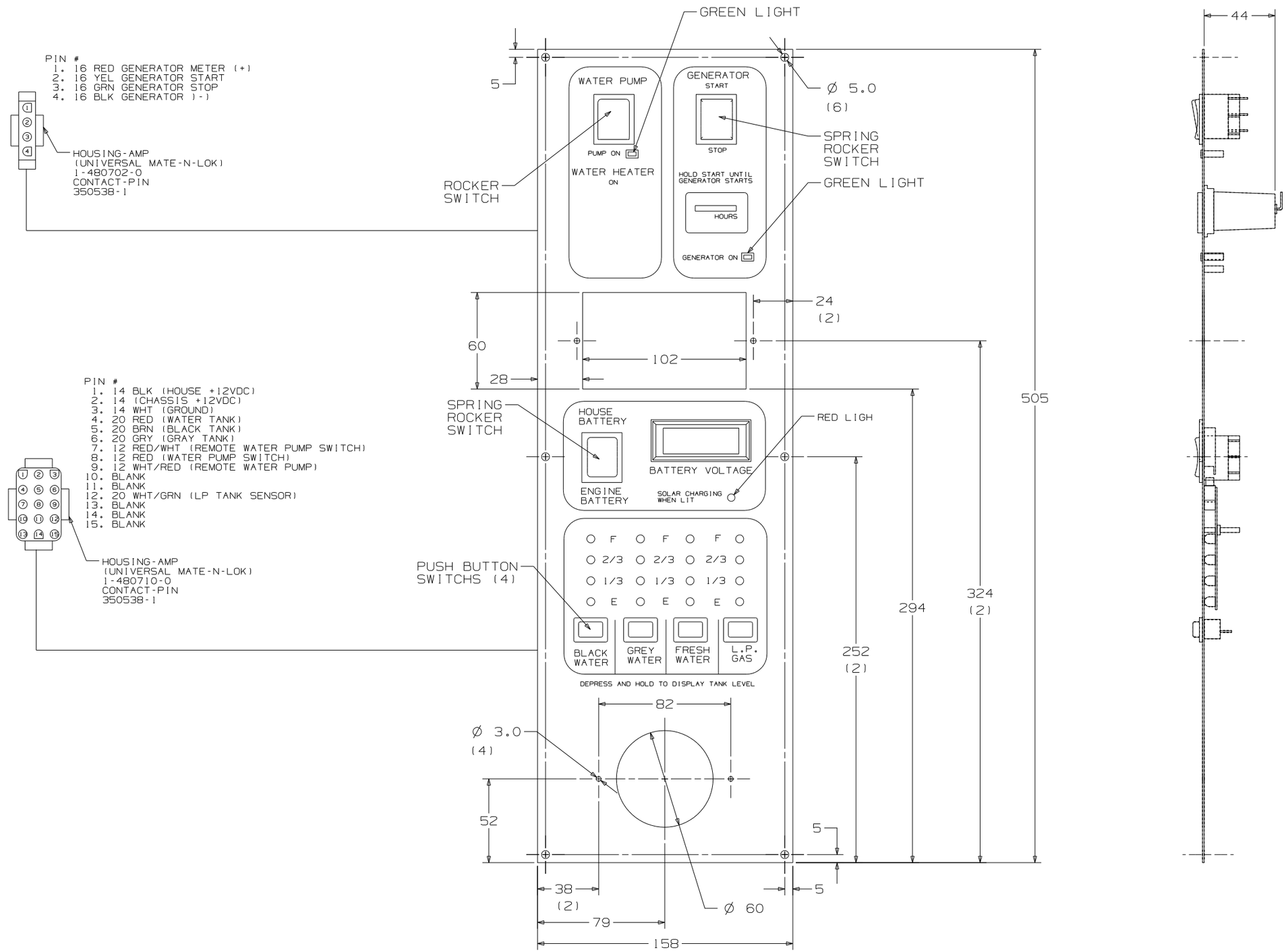

FIRST USED	STANDARDS
	DO NOT SCALE DRAWING
TITLE:	PANEL-MONITOR
SHEET 4	PART NO 133004

DWG NO 133004

LTR.	DESCRIPTION	DATE	DG. BY	CK. BY
LTR	DESCRIP ECN 16261	DATE	CHG BY	CHK BY
A	SEE PAGE 3 ECN 16381	4-6-04	RJL	RJL
B	L5130-02 WAS L5113-04 ECN 16394	4-21-04	RJL	RJL

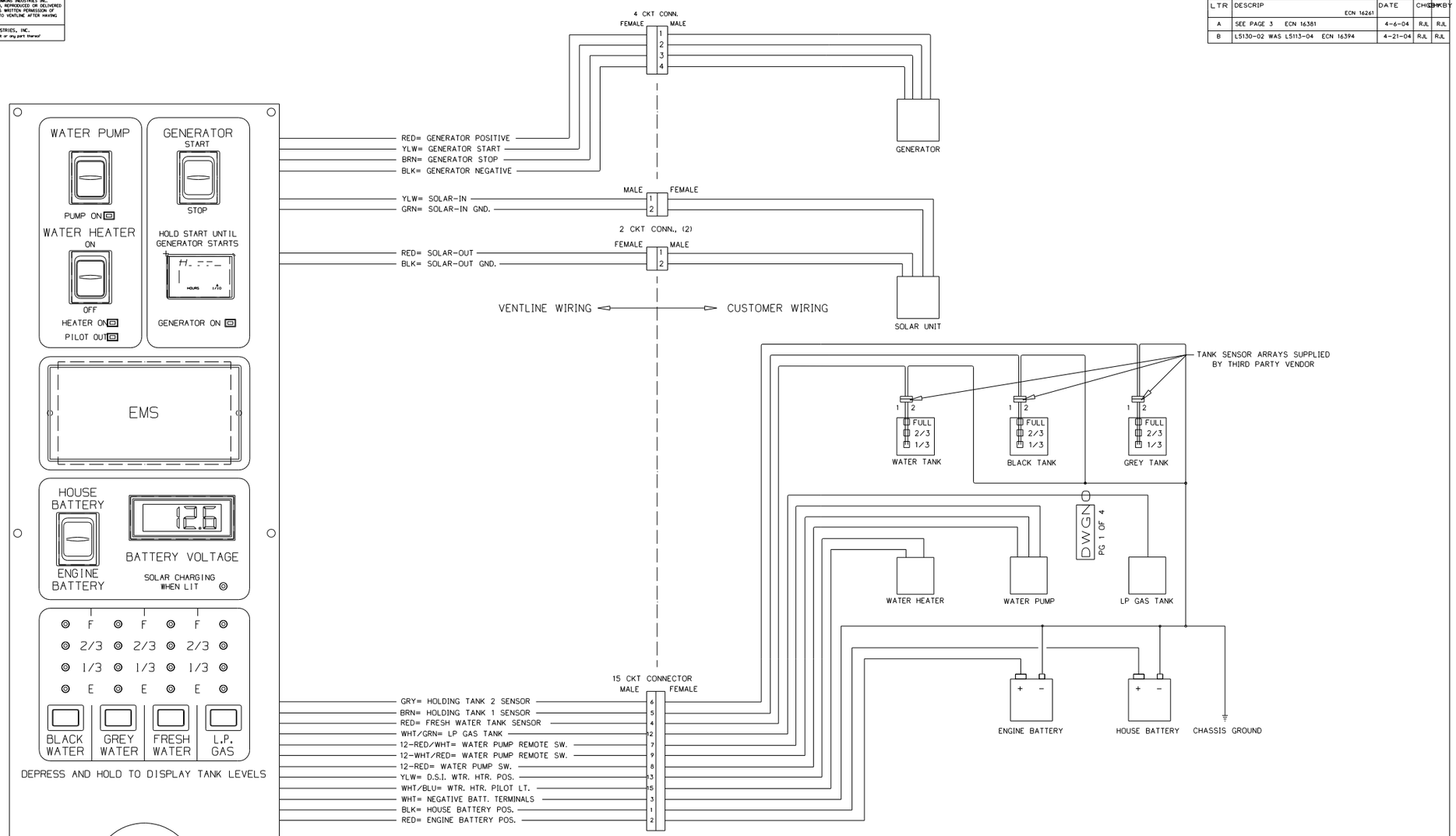

NOTES:

1. UNLESS OTHERWISE SPECIFIED ALL WIRE IS 22 AWG.
2. REF. DWG.'S:
   HARNESS, INTERNAL & SWITCH= L7785-01, -02
   HARNESS, GEN. INTERNAL & SWITCH= L7786-00
   HARNESS, SOLAR LIGHT= L7722-00
   PCB= L5130-02
   HARNESS, TEST= L8012-00
   TEST BOX= L8506-00
3. ALL PIGTAILS TO BE SUPPLIED BY CUSTOMER.
4. BEFORE PACKING, SECURE HARNESS WITH VD0169-00 TIE WRAP ON RIGHT SIDE POST.

PART NO.	REQ'D	MATERIAL	DESCRIPTION	DWG SIZE

BLANK SIZE BLANK WGT | USED ON USEDON

DRAWN DATE DRWNDATE | MATERIAL MATL MATL MATL MATL | PHILIPS IND. INC. VENTLINE DIVISION BRISTOL, INDIANA 46507

CHECKED DATE | NAME DWGNAME DWGNAME DWGNAME | SCALE: SCALE

CHECKED DATE | DWG. NO. PG 1 OF 4 DWGNO

APPV'D DATE

ENGLISH (TOLERANCE UNLESS SPECIFIED)
0 PL.: .040 1 PL.: .020
2 PL.: .010 3 PL.: .005
FRACTIONS ±1/64

FIRST USED STANDARD

DO NOT SCALE DRAWING

TITLE: PANEL-MONITOR

SHEET 5 | PART NO 133004

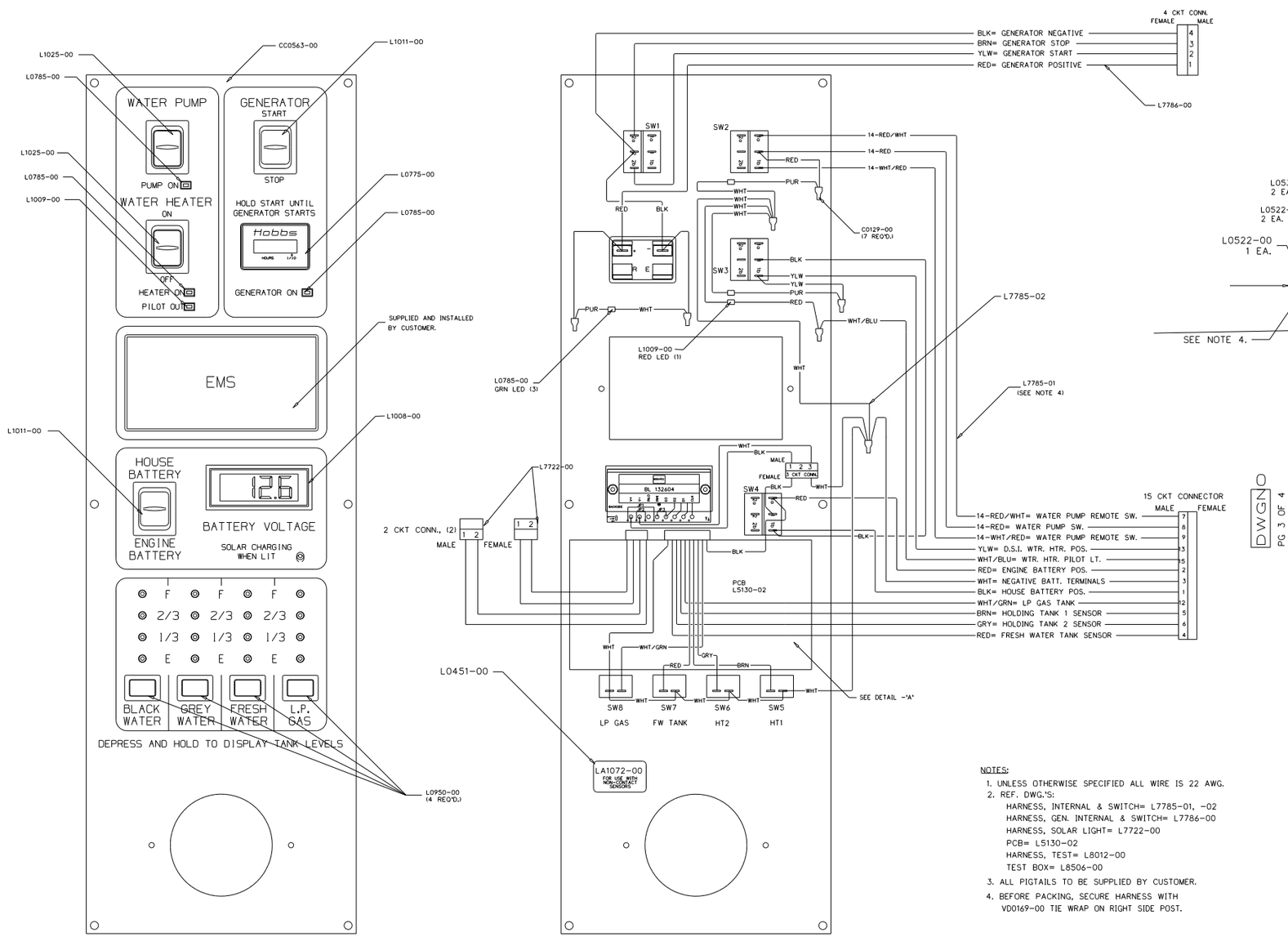

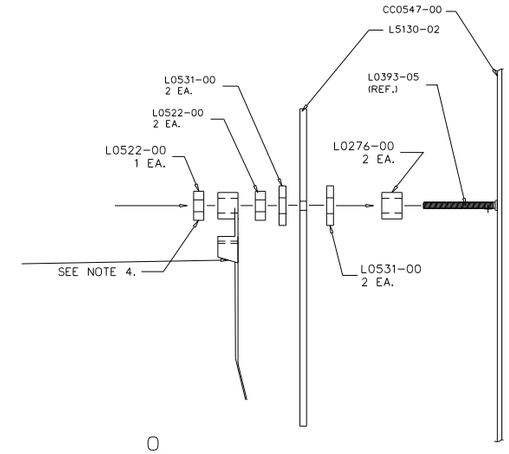

DWG NO 133004

LTR.	DESCRIPTION	DATE	CHG. BY	CHK. BY
LTR	DESCRIP ECN 16261	DATE	CHGBY	CHKBY
A	ADDED LABEL DETAIL ECN 16381	4-6-04	RJL	RJL
B	L5130-02 WAS L5113-04 ECN 16394	4-21-04	RJL	RJL

NOTES:

1. UNLESS OTHERWISE SPECIFIED ALL WIRE IS 22 AWG.
2. REF. DWG.'S:
   HARNESS, INTERNAL & SWITCH= L7785-01, -02
   HARNESS, GEN. INTERNAL & SWITCH= L7786-00
   HARNESS, SOLAR LIGHT= L7722-00
   PCB= L5130-02
   HARNESS, TEST= L8012-00
   TEST BOX= L8506-00
3. ALL PIGTAILS TO BE SUPPLIED BY CUSTOMER.
4. BEFORE PACKING, SECURE HARNESS WITH VD0169-00 TIE WRAP ON RIGHT SIDE POST.

PART NO.	REQ'D	MATERIAL	DESCRIPTION	DWG SIZE
PART_NO	REQ'D	MAT'L	DESC	SIZE
PART_NO	REQ'D	MAT'L	DESC	SIZE
PART_NO	REQ'D	MAT'L	DESC	SIZE
PART_NO	REQ'D	MAT'L	DESC	SIZE
PART_NO	REQ'D	MAT'L	DESC	SIZE
PART_NO	REQ'D	MAT'L	DESC	SIZE
PART_NO	REQ'D	MAT'L	DESC	SIZE
PART_NO	REQ'D	MAT'L	DESC	SIZE
PART_NO	REQ'D	MAT'L	DESC	SIZE
PART_NO	REQ'D	MAT'L	DESC	SIZE
PART_NO	REQ'D	MAT'L	DESC	SIZE
PART_NO	REQ'D	MAT'L	DESC	SIZE
PART_NO	REQ'D	MAT'L	DESC	SIZE
PART_NO	REQ'D	MAT'L	DESC	SIZE
PART_NO	REQ'D	MAT'L	DESC	SIZE
PART_NO	REQ'D	MAT'L	DESC	SIZE
PART_NO	REQ'D	MAT'L	DESC	SIZE
PART_NO	REQ'D	MAT'L	DESC	SIZE
PART_NO	REQ'D	MAT'L	DESC	SIZE
PART_NO	REQ'D	MAT'L	DESC	SIZE
PART_NO	REQ'D	MAT'L	DESC	SIZE
PART_NO	REQ'D	MAT'L	DESC	SIZE
PART_NO	REQ'D	MAT'L	DESC	SIZE
PART_NO	REQ'D	MAT'L	DESC	SIZE
PART_NO	REQ'D	MAT'L	DESC	SIZE

ENGLISH (TOLERANCE UNLESS SPECIFIED)
0 PL.: ±.040 1 PL.: ±.020
2 PL.: ±.010 3 PL.: ±.005
FRACTIONS ±1/64

BLANK SIZE BLANK WGT USED ON USEDON
DRAWN DATE DRWNDATE
CHECKED DATE CHECKEDDATE
APPV'D DATE
MATERIAL MATL MATL MATL
PHILIPS IND. INC.
VENTLINE DIVISION
BRISTOL, INDIANA 46507
NAME DWGNAME DWGNAME DWGNAME
SCALE: SCALE
DWG. NO. PG 3 OF 4 DWGNO

FIRST USED
STANDARD
DO NOT SCALE DRAWING
TITLE: PANEL-MONITOR
SHEET 6
PART NO 133004

DWG NO 133004

LTR.	DESCRIPTION	DATE	DWN BY	CHK BY
LTR	DESCRIP ECN 16261	DATE	CHKD	CHKBY
A	SEE PAGE 3 ECN 16381	4-6-04	RJL	RJL
B	L5130-02 WAS L5113-04 ECN 16394	4-21-04	RJL	RJL

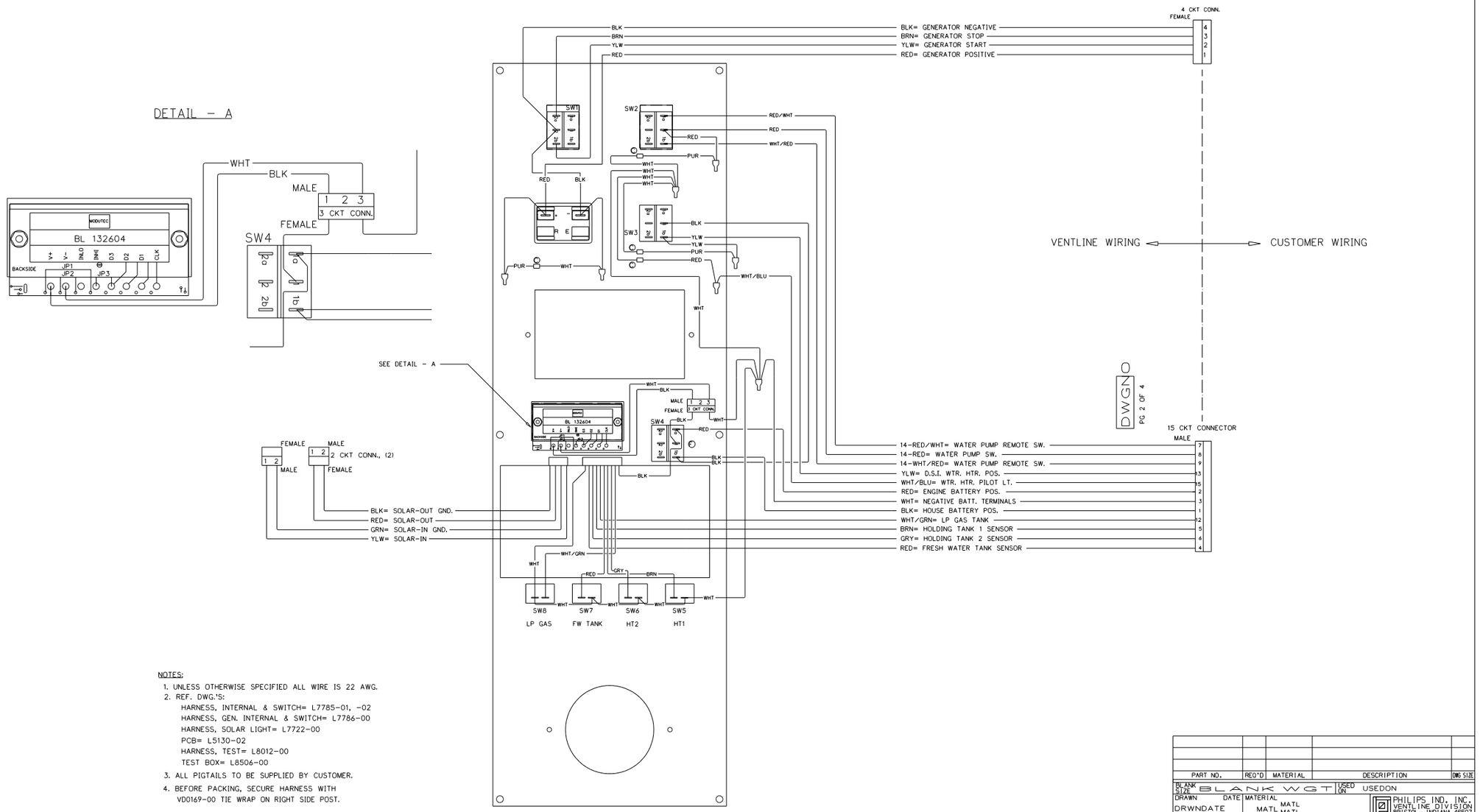

NOTES:

1. UNLESS OTHERWISE SPECIFIED ALL WIRE IS 22 AWG.
2. REF. DWG.'S:
   HARNESS, INTERNAL & SWITCH= L7785-01, -02
   HARNESS, GEN. INTERNAL & SWITCH= L7786-00
   HARNESS, SOLAR LIGHT= L7722-00
   PCB= L5130-02
   HARNESS, TEST= L8012-00
   TEST BOX= L8506-00
3. ALL PIGTAILS TO BE SUPPLIED BY CUSTOMER.
4. BEFORE PACKING, SECURE HARNESS WITH VD0169-00 TIE WRAP ON RIGHT SIDE POST.

PART NO.	REQ'D	MATERIAL	DESCRIPTION	DWG SIZE
BLANK SIZE BLANK WGT	USED ON	USEDON		
DRAWN DATE DRWNDATE	MATERIAL MATL MATL MATL MATL		PHILIPS IND. INC. VENTLINE DIVISION BRISTOL, INDIANA 46507	
CHECKED DATE CHECKEDDATE	NAME DWGNAME DWGNAME DWGNAME		SCALE: SCALE	
APPV'D DATE			DWG. NO. PG 2 OF 4 DWGNO	

ENGLISH (TOLERANCE UNLESS SPECIFIED)
0 PL.: .040 1 PL.: .020
2 PL.: .010 3 PL.: .005
FRACTIONS ±1/64

FIRST USED
STANDARD

DO NOT SCALE DRAWING

TITLE:
PANEL-MONITOR

SHEET 7 PART NO 133004

RELEASE	REV A	DATE	DWG NO 152594

REV	ZONE	REVISION RECORD	DATE	DFTR-ORIG

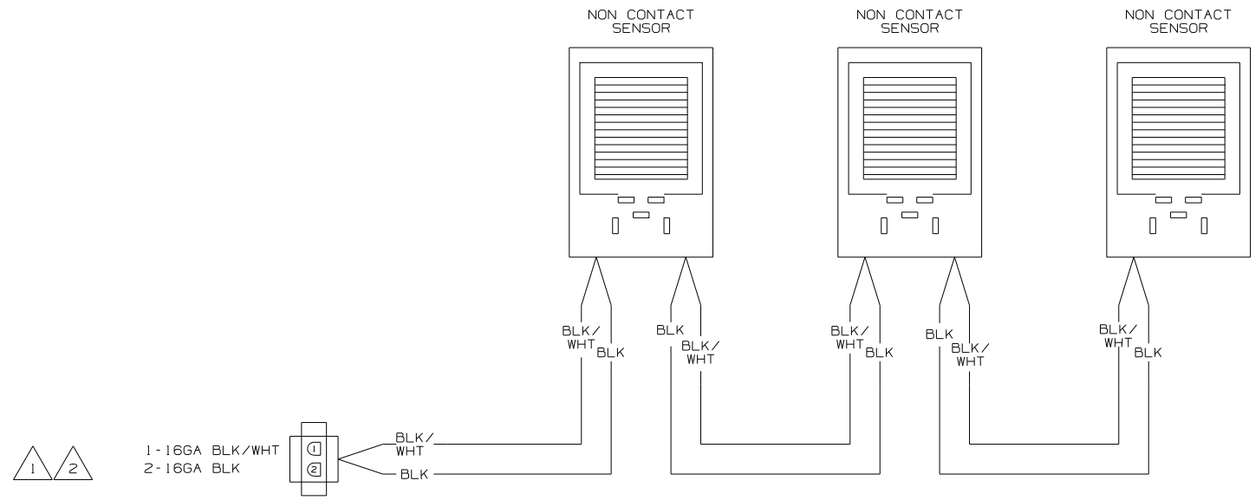

WIRING DIAGRAM-TANK,WATER
OR
WIRING DIAGRAM-TANK,MAIN
(WIRE ASM-151316 REV A)

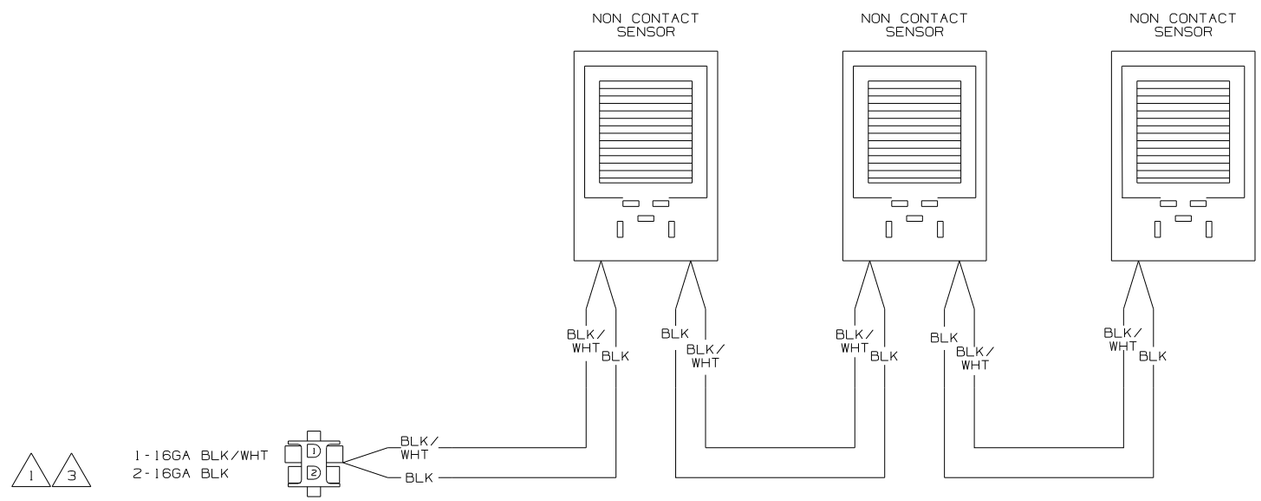

WIRING DIAGRAM-AUX HOLDING
(WIRE ASM-151317 REV A)

3. IF TWO MONITOR PANELS ARE UTILIZED THIS WIRE ASM CONNECTS TO WIRE ASM-TANK,DIODE PACK 151808-01 SHT2.

2. IF TWO MONITOR PANELS ARE UTILIZED THIS WIRE ASM CONNECTS TO WIRE ASM-TANK,DIODE PACK 151808-02 SHT2.

1. IF ONLY ONE MONITOR PANEL IS USED SEE WIRING DIAGRAM-BODY FOR ADDITIONAL INFORMATION.

NOTES:

DFTR	ORIG. DATE
CHKR	ALL DIMENSIONS ARE IN MILLIMETERS
P.E.	
M.E.	FIRST USED
DSNR	05 MOTOR HOMES

UNSPECIFIED TOLERANCES ARE:
WHOLE DIM (X) :
ONE-PLACE (X.X) :
TWO-PLACE (X.XX) :
ANGLE :

MATERIAL:

THIRD ANGLE PROJECTION

DO NOT SCALE DRAWING

TITLE:
WIRING DIAGRAM-HOLDING TANKS

SHEET 1 OF 2 | PART NO 152594

DWG NO 152594

WIRE ASM-COACH

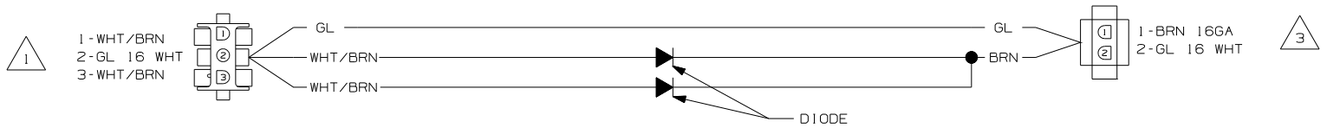

WIRING DIAGRAM-TANK,DIODE PACK
151808-01-000 REV A

WIRE ASM-COACH

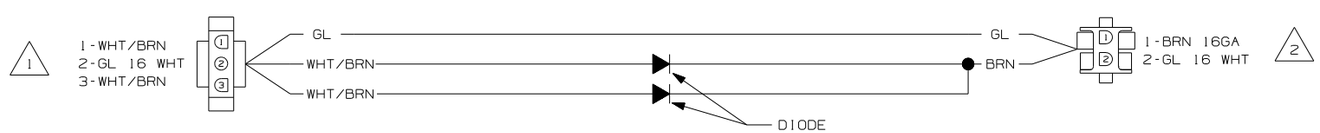

WIRING DIAGRAM-TANK,DIODE PACK
151808-02-000 REV A

NOTES:

3. CONNECT TO WIRE ASM-TANK,AUX. SEE SHT 1.
2. CONNECT WIRE ASM-TANK,WATER OR MAIN. SEE SHT 1.
1. SEE WIRING DIAGRAM-BODY FOR ADDIDTIONAL INFORMATION.

FIRST USED 05 MOTOR HOMES	
DO NOT SCALE DRAWING	
TITLE: WIRING DIAGRAM-HOLDING TANKS	
SHEET 2	PART NO 152594

DRAWING NO.	SHEET	SERIES
156349-01	1	P
156349-02	2	R,S

RELEASE	REV A	DATE	DWG NO 156349

REV	ZONE	REVISION RECORD	DATE	DFTR-ORIG

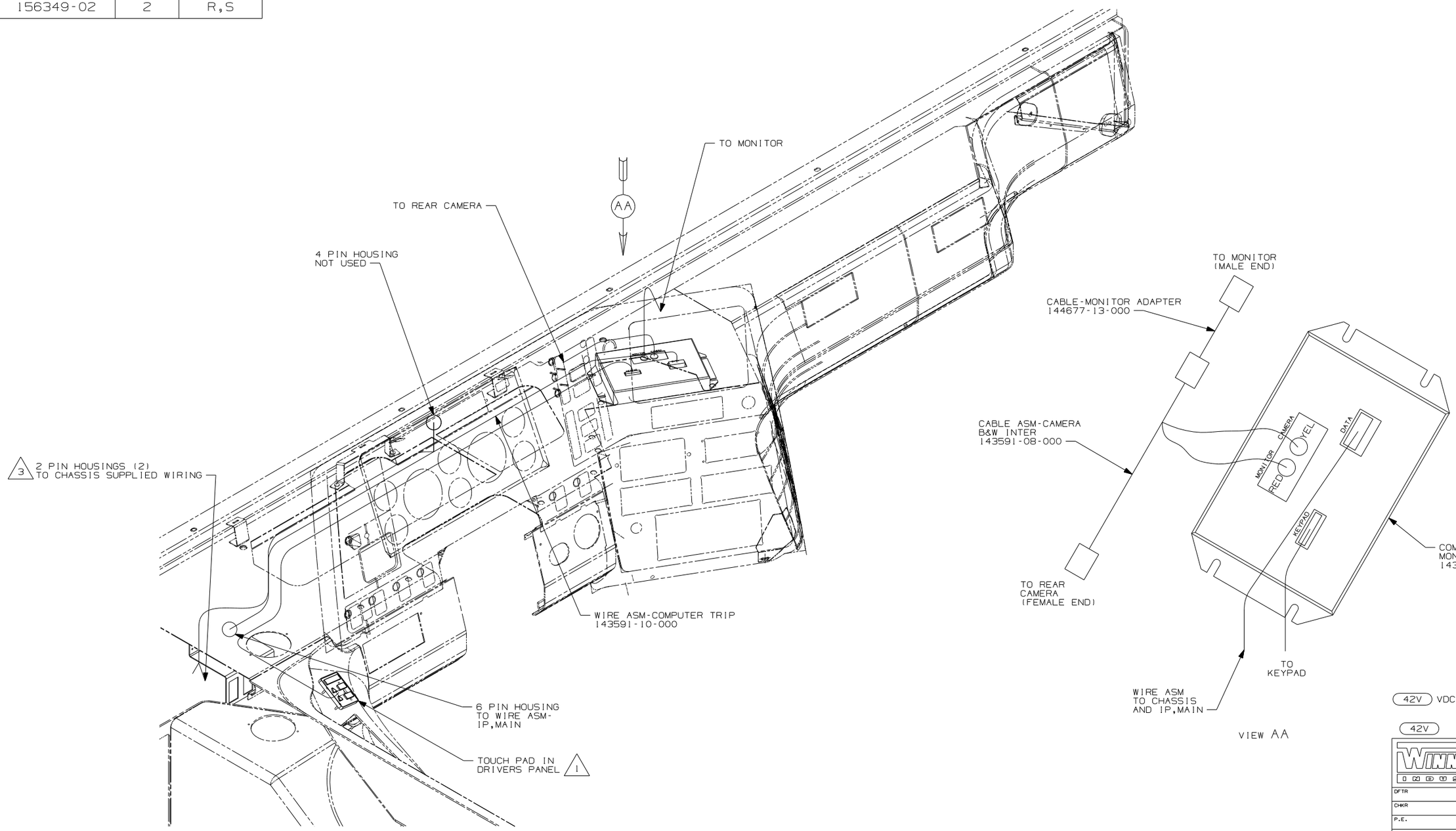

42V VDC/SWITCHING SYSTEM

42V

WINNEBAGO INDUSTRIES

DFTR	ORIG. DATE
CHKR	ALL DIMENSIONS ARE IN MILLIMETERS
P.E.	
M.E.	FIRST USED
DSNR	07 MOTORHOMES

UNSPECIFIED TOLERANCES ARE:

WHOLE DIM (X)	:	
ONE-PLACE (X.X)	:	1.0
TWO-PLACE (X.XX)	:	0.50
ANGLE	:	

THIRD ANGLE PROJECTION

MATERIAL:

DO NOT SCALE DRAWING

TITLE:
WIRING INSTL-TRIP COMPUTER

SHEET 1 OF 2 | PART NO 156349 | REV

2 CONNECT TRIP TEK 2 PIN HOUSINGS TO FREIGHTLINER 2 PIN HOUSINGS W/GREEN AND ORANGE TWISTED PAIR WIRES & YELLOW AND DARK GREEN TWISTED PAIR WIRES.

1 USE VENDER SUPPLIED NUTS.

NOTES:

DWG NO 156349

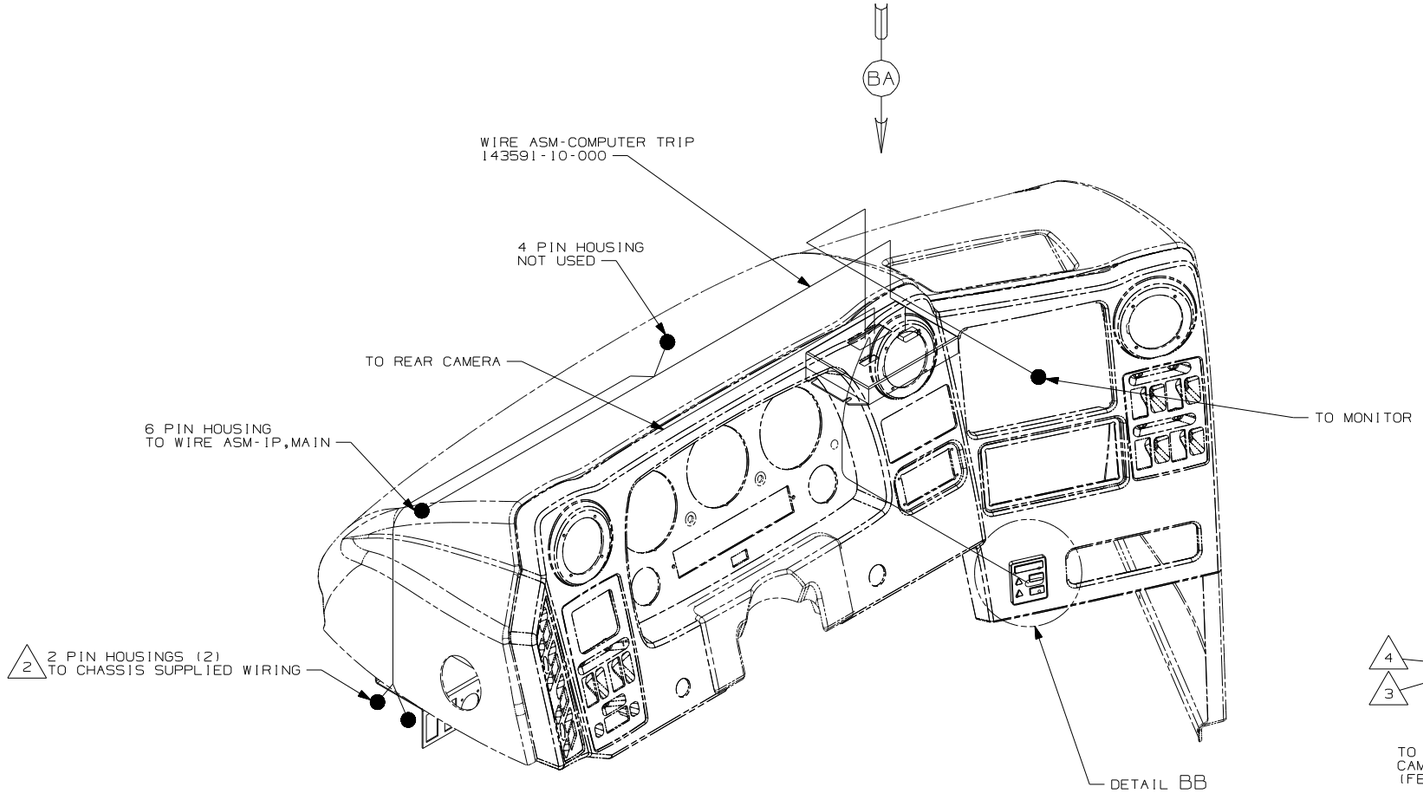

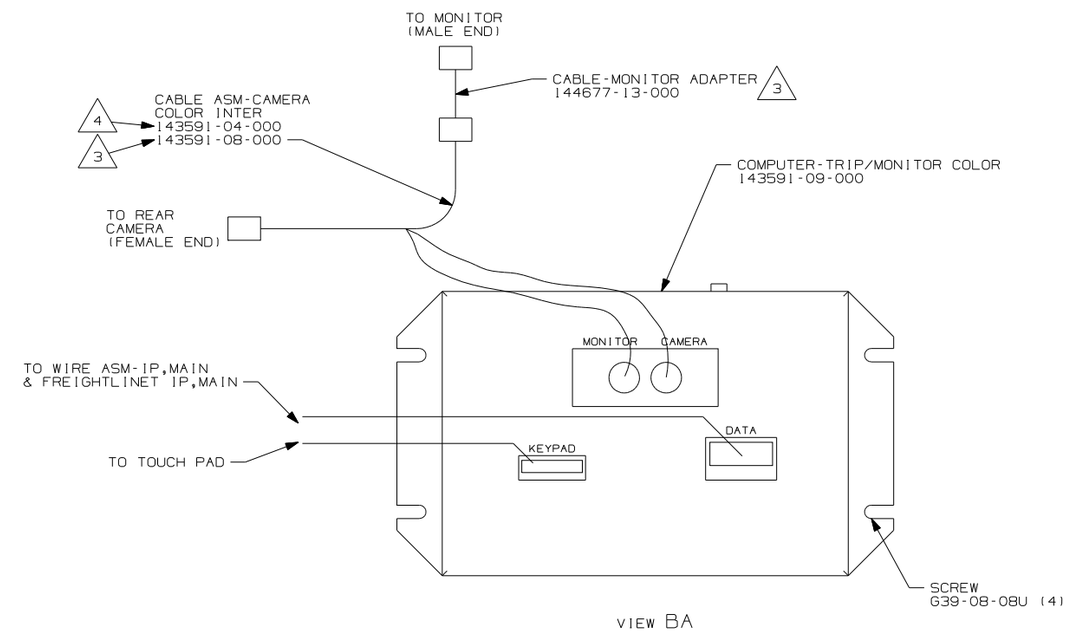

VIEW BA

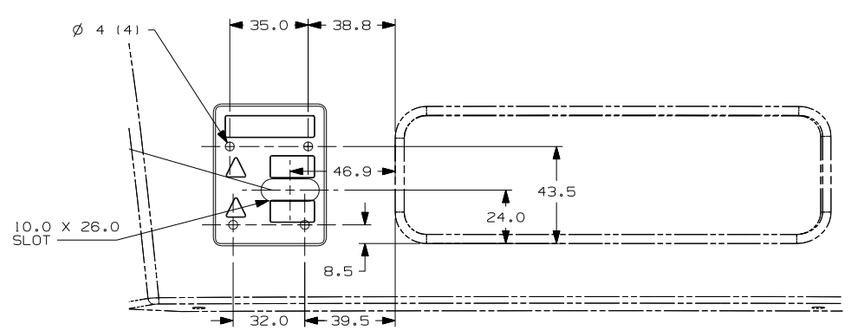

DETAIL BB (1)

4 FOR USE ON S-SERIES ONLY.

3 FOR USE ON R-SERIES ONLY.

2 CONNECT TRIP TEK 2 PIN HOUSINGS TO FREIGHTLINER 2 PIN HOUSINGS W/GREEN AND ORANGE TWISTED PAIR WIRES & YELLOW & DARK GREEN TWISTED PAIR WIRES.

1 USE VENDOR SUPPLIED NUTS.

NOTES:

42V VCR/SWITCHING SYSTEM

42V

FIRST USED 07 MOTORHOMES

DO NOT SCALE DRAWING

TITLE: WIRING INSTL-TRIP COMPUTER

SHEET 2 PART NO 156349 REV 1

RELEASE	REV A	DATE	DWG NO 110138
REV	ZONE	REVISION RECORD	DATE / DFTR-ORIG

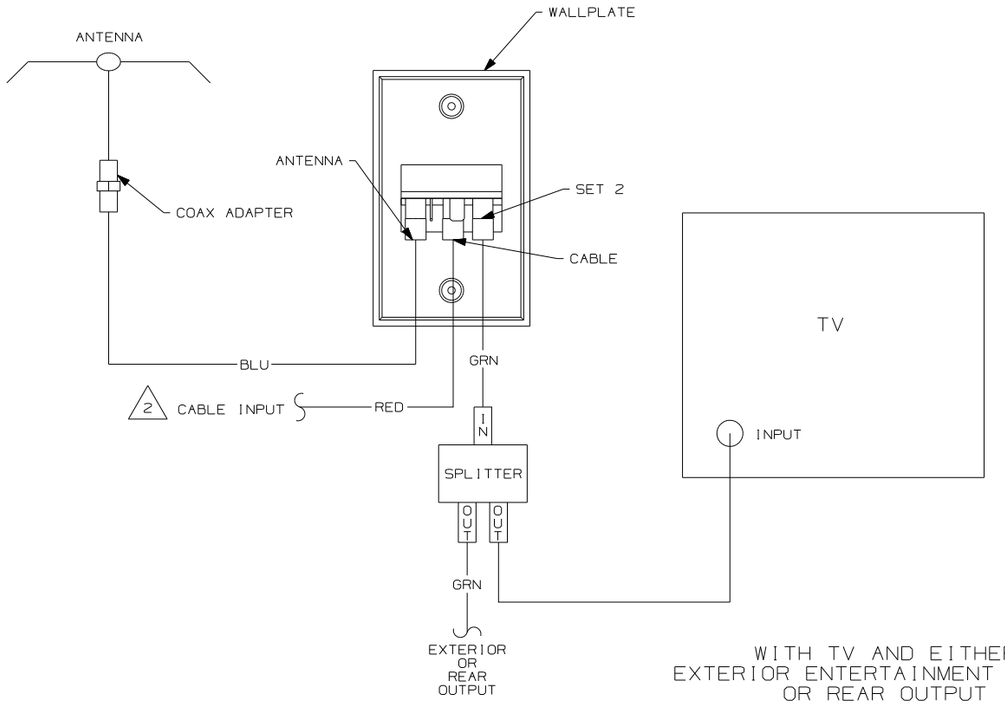

WITH TV AND EITHER EXTERIOR ENTERTAINMENT CENTER OR REAR OUTPUT

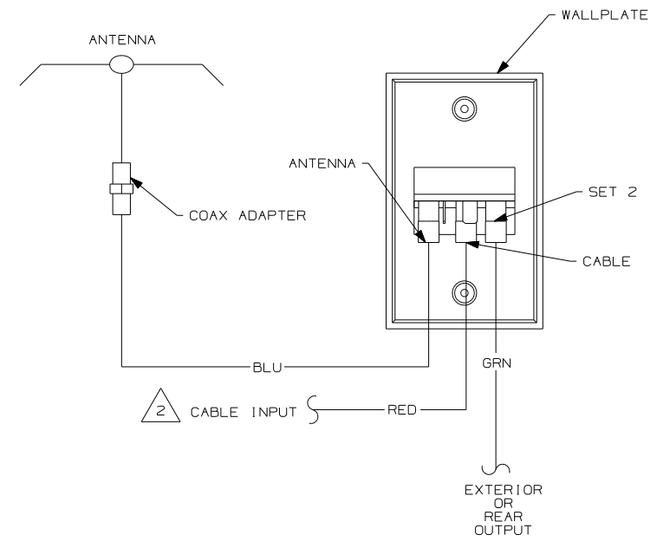

WITH EITHER EXTERIOR ENTERTAINMENT CENTER OR REAR OUTPUT

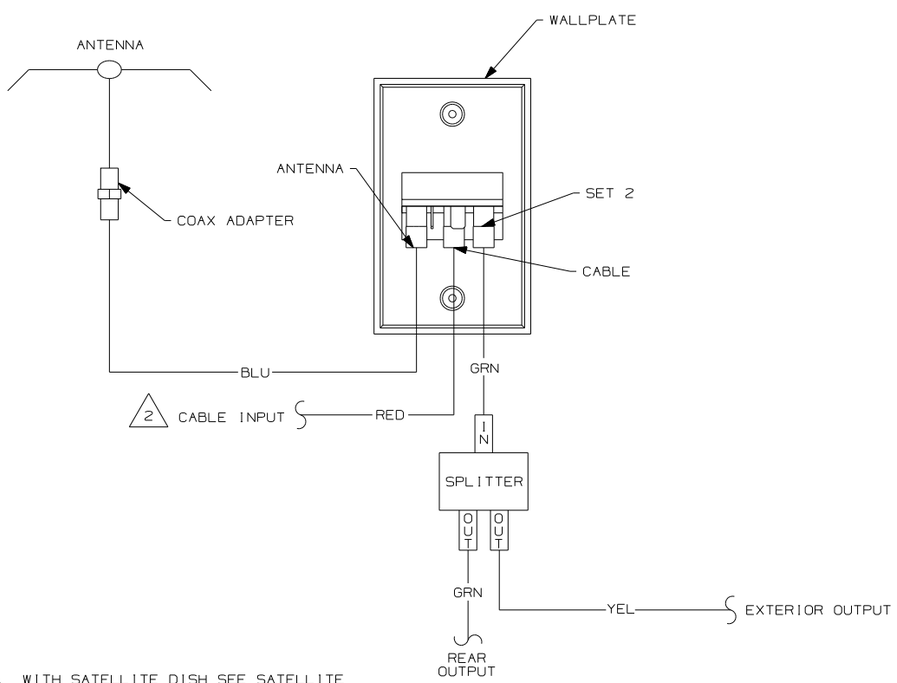

WITH EXTERIOR ENTERTAINMENT CENTER AND REAR OUTPUT

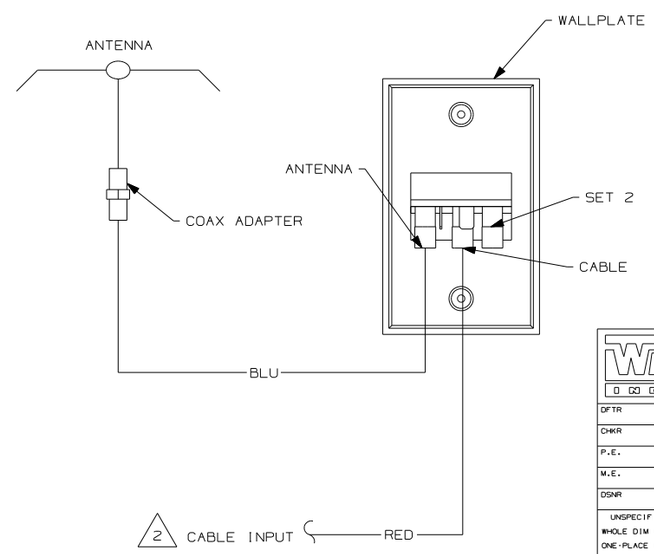

WITHOUT EITHER EXTERIOR ENTERTAINMENT CENTER OR REAR OUTPUT

2 WITH SATELLITE DISH SEE SATELLITE DISH VIEW SHT 2 BOTTOM LEFT.

1 COLOR INDICATES IDENTIFICATION TAPE.

NOTES:

DFTR	ORIG. DATE
CHKR	ALL DIMENSIONS ARE IN MILLIMETERS
P.E.	
M.E.	FIRST USED
DSNR	93 MOTORHAMES

UNSPECIFIED TOLERANCES ARE:
WHOLE DIM (X) :
ONE-PLACE (X.X) :
TWO-PLACE (X.XX) :
ANGLE :

MATERIAL:

THIRD ANGLE PROJECTION

DO NOT SCALE DRAWING

TITLE: WIRING DIAGRAM-TV COAX

SHEET 1 OF 2 | PART NO 110138

DWG NO 110138

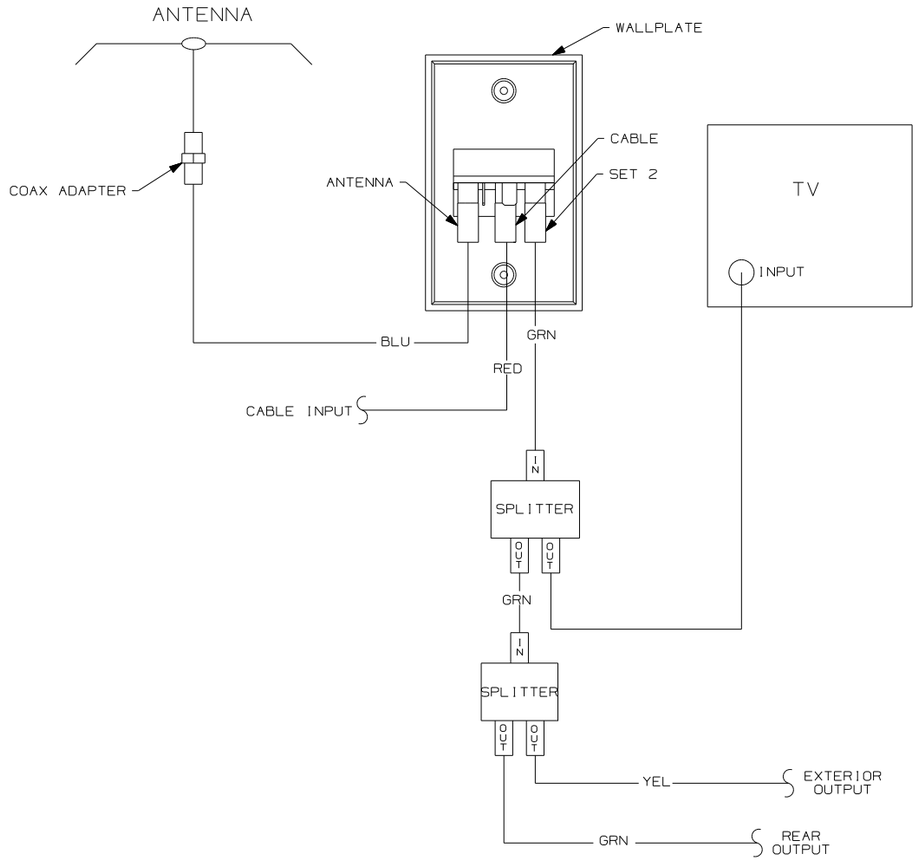

WITH TV,
EXTERIOR ENTERTAINMENT CENTER
AND REAR OUTPUT

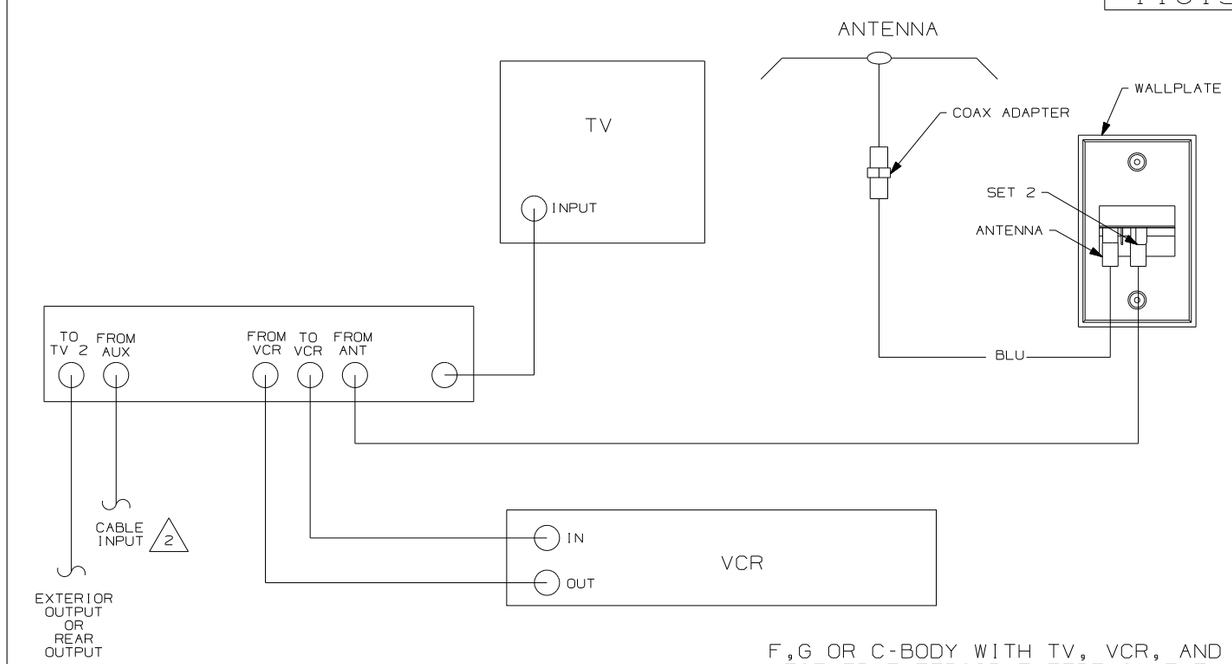

F,G OR C-BODY WITH TV, VCR, AND
EITHER EXTERIOR ENTERTAINMENT
CENTER OR REAR OUTPUT

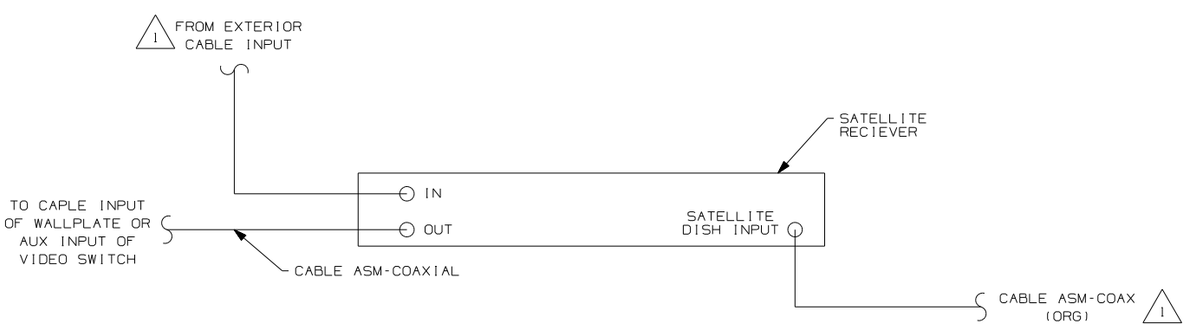

2 WITH SATELLITE DISH SEE SATELLITE DISH VIEW BOTTOM LEFT.

1 CONNECT TV COAX TO JACK ON FRONT OF WALLPLATE.

NOTES:

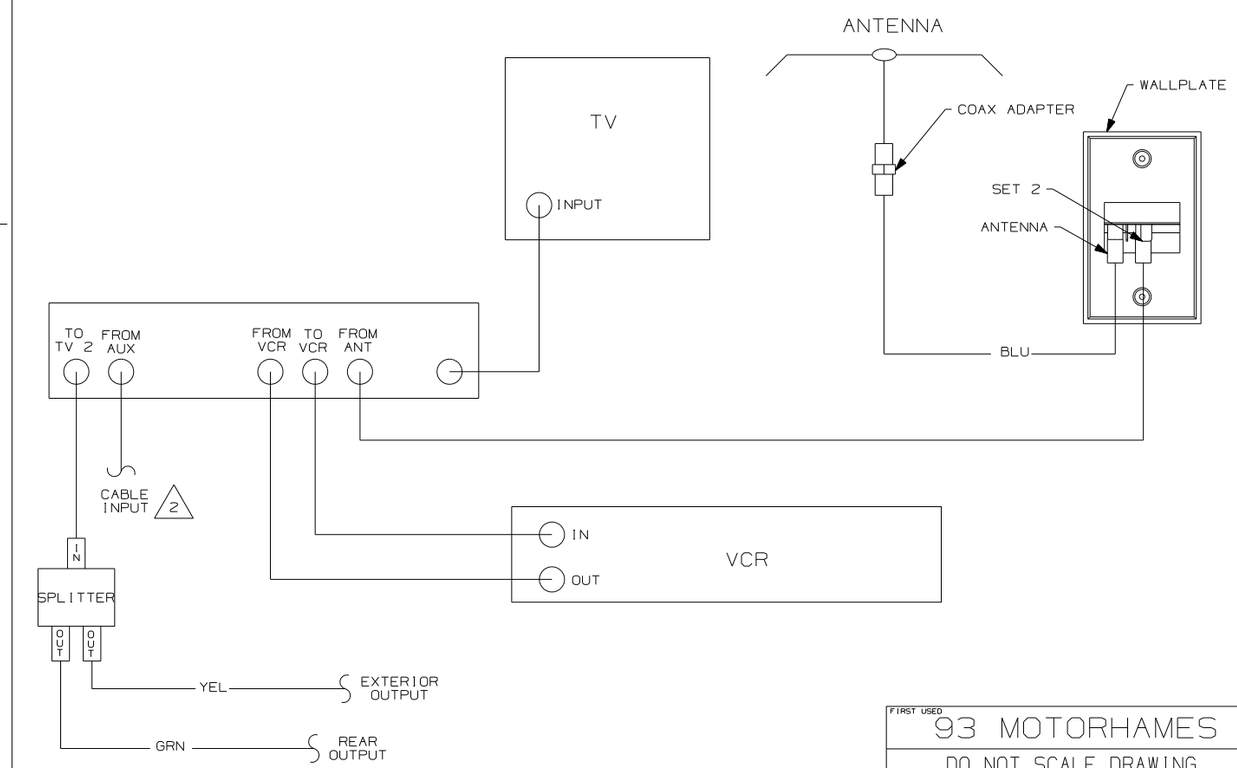

N,M OR P-SERIES WITH TV AND VCR OR
F,G OR C-BODY WITH TV, VCR, EXTERIOR
ENTERTAINMENT CENTER AND REAR OUTPUT

FIRST USED	93 MOTORHAMES
	DO NOT SCALE DRAWING
TITLE:	WIRING DIAGRAM-TV COAX
SHEET 2	PART NO 110138

DRAWING NO.	SHEET	UNIT
156325-01	1,7,8	D
156325-02	2,7,8	F
156325-03	3,8	G
156325-04	4,8	P
156325-05	5,8	R
156325-06	6,8,9	S
156325-07	10,11	E

RELEASE	REV A	DATE	DWG NO 156325
REV	ZONE	REVISION RECORD	DATE / DFTR-ORIG

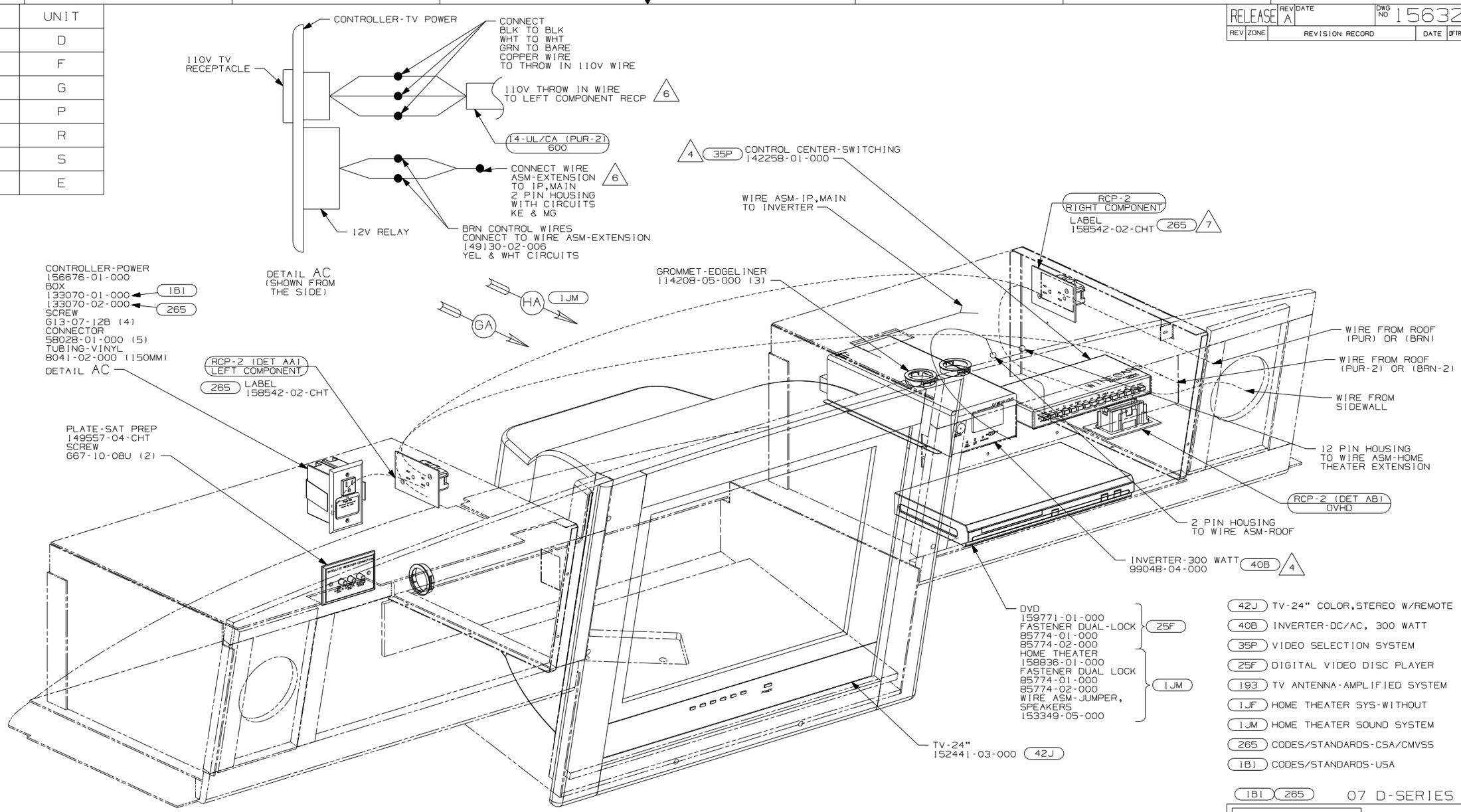

42J	TV-24" COLOR,STEREO W/REMOTE
40B	INVERTER-DC/AC, 300 WATT
35P	VIDEO SELECTION SYSTEM
25F	DIGITAL VIDEO DISC PLAYER
193	TV ANTENNA-AMPLIFIED SYSTEM
1JF	HOME THEATER SYS-WITHOUT
1JM	HOME THEATER SOUND SYSTEM
265	CODES/STANDARDS-CSA/CMVSS
1B1	CODES/STANDARDS-USA

1B1 265 07 D-SERIES

7 WITH 1JF AND WITHOUT 25G

6 ROUTE 110V AND 12V WIRES IN OPPOSITE ENDS OF ELECTRICAL BOX.

5 CONNECT PURPLE-2/BROWN-2 TO INVERTER WITH FEATURE 40B

4 SLIDE INVERTER AND VIDEO SWITCH INTO RAILS PROVIDED ON SHELF ASM

3. WHERE WIRES PASS THROUGH HOLES IN STEEL AND NOT OTHERWISE PROTECTED, USE GROMMET 92908-02-000.

2. ALL WIRES TO BE SECURED WITH CLAMP 10495-01-000 OR CLIP 80734-01-000 EVERY 600MM. USE SCREW G67-10-12B UNLESS OTHERWISE SPECIFIED.

1. 110V WIRE TO BE CLAMPED WITH CLAMP 10497-05-000 WITHIN 200MM OF OUTLET BOXES, USE SCREW G67-10-12B.

NOTES:

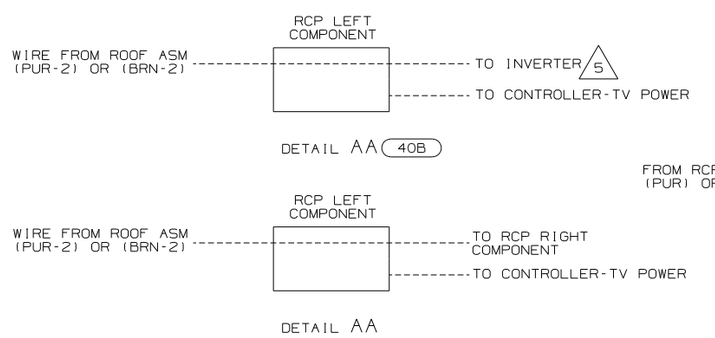

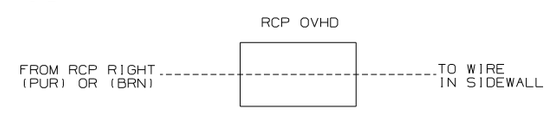

DFTR	ORIG. DATE
CHKR	ALL DIMENSIONS ARE IN MILLIMETERS
P.E.	
M.E.	FIRST USED 07 A-BODIES
DSNR	

UNSPECIFIED TOLERANCES ARE:

WHOLE DIM (X)	:	3
ONE-PLACE (X.X)	:	1.5
TWO-PLACE (X.XX)	:	0.50
ANGLE	:	1°

MATERIAL:

THIRD ANGLE PROJECTION

DO NOT SCALE DRAWING

TITLE: WIRING INSTL-TV/DVD,FRONT

SHEET 1 OF 11 | PART NO 156325 | REV

DWG NO 156325

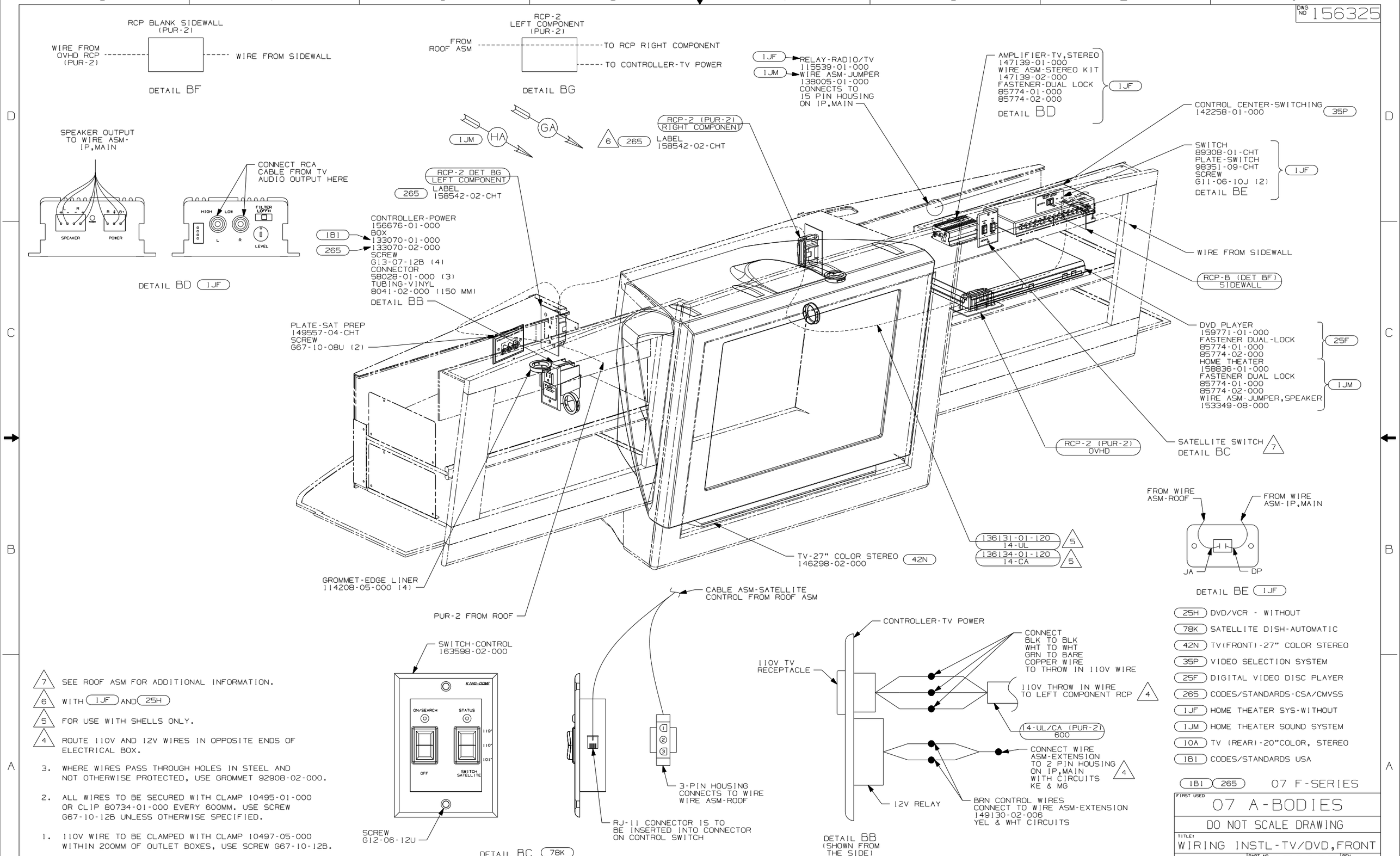

7 SEE ROOF ASM FOR ADDITIONAL INFORMATION.

6 WITH 1JF AND 25H

5 FOR USE WITH SHELLS ONLY.

4 ROUTE 110V AND 12V WIRES IN OPPOSITE ENDS OF ELECTRICAL BOX.

3. WHERE WIRES PASS THROUGH HOLES IN STEEL AND NOT OTHERWISE PROTECTED, USE GROMMET 92908-02-000.

2. ALL WIRES TO BE SECURED WITH CLAMP 10495-01-000 OR CLIP 80734-01-000 EVERY 600MM. USE SCREW G67-10-12B UNLESS OTHERWISE SPECIFIED.

1. 110V WIRE TO BE CLAMPED WITH CLAMP 10497-05-000 WITHIN 200MM OF OUTLET BOXES, USE SCREW G67-10-12B.

NOTES:

25H	DVD/VCR - WITHOUT
78K	SATELLITE DISH-AUTOMATIC
42N	TV(FRONT)-27" COLOR STEREO
35P	VIDEO SELECTION SYSTEM
25F	DIGITAL VIDEO DISC PLAYER
265	CODES/STANDARDS-CSA/CMVSS
1JF	HOME THEATER SYS-WITHOUT
1JM	HOME THEATER SOUND SYSTEM
10A	TV (REAR)-20"COLOR, STEREO
1B1	CODES/STANDARDS USA

1B1 265 07 F-SERIES

FIRST USED 07 A-BODIES

DO NOT SCALE DRAWING

TITLE: WIRING INSTL-TV/DVD,FRONT

SHEET 2 PART NO 156325 REV

DWG NO 156325

RCP BLANK SIDEWALL (PUR-2)

WIRE FROM OVHD RCP (PUR-2) — WIRE FROM SIDEWALL

DETAIL CA

RCP-2 LEFT COMPONENT (PUR-2)

FROM ROOF ASM — TO RCP RIGHT COMPONENT

TO CONTROLLER-TV POWER

DETAIL CG

4 CONDUCTOR CABLE TO CONTROL BOX

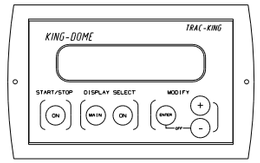

DETAIL CD (48R) 5

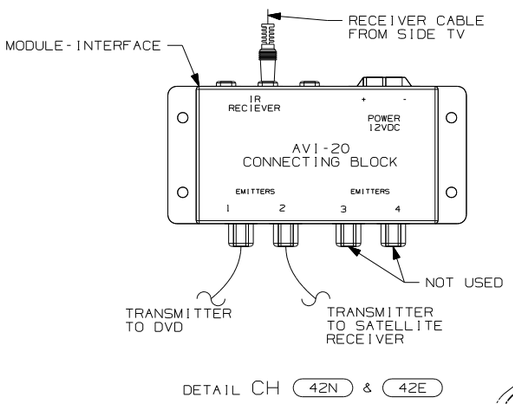

DETAIL CH (42N) & (42E)

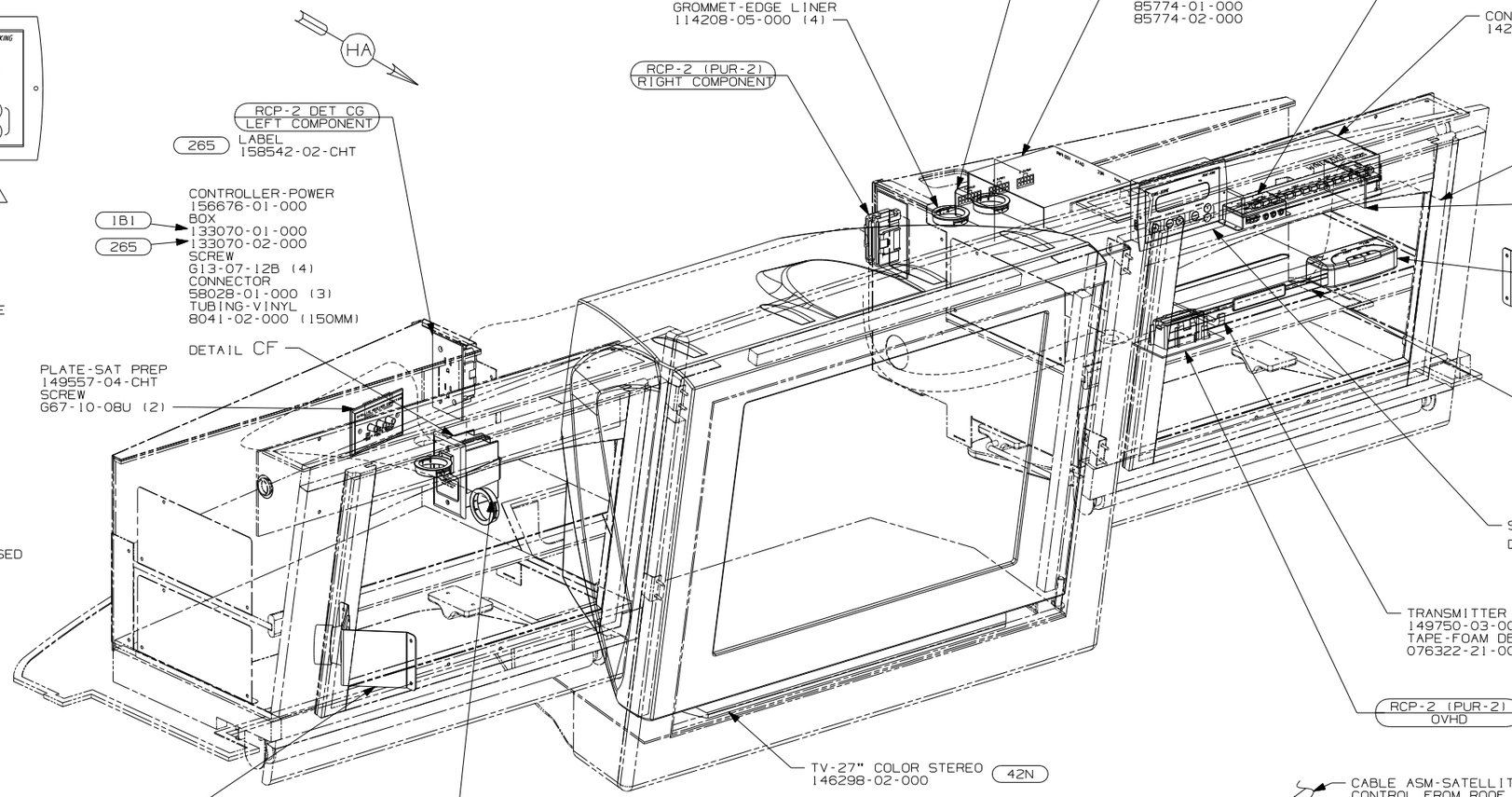

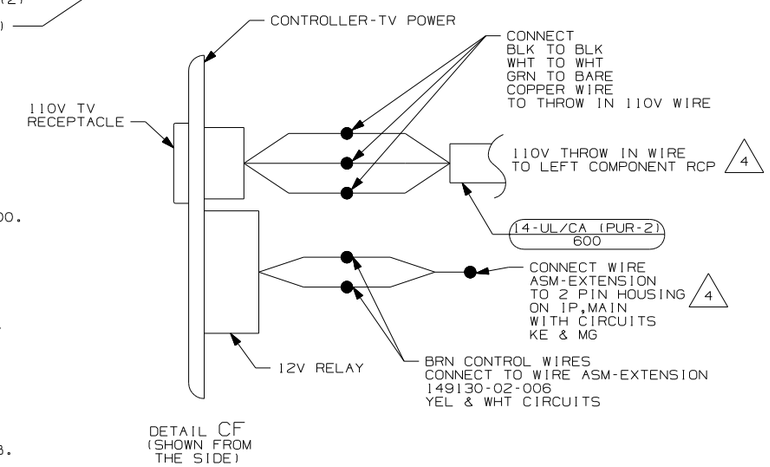

DETAIL CF (SHOWN FROM THE SIDE)

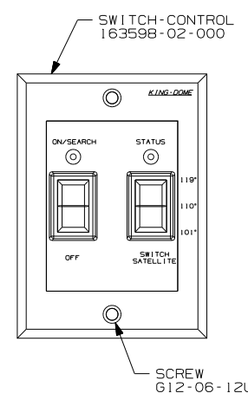

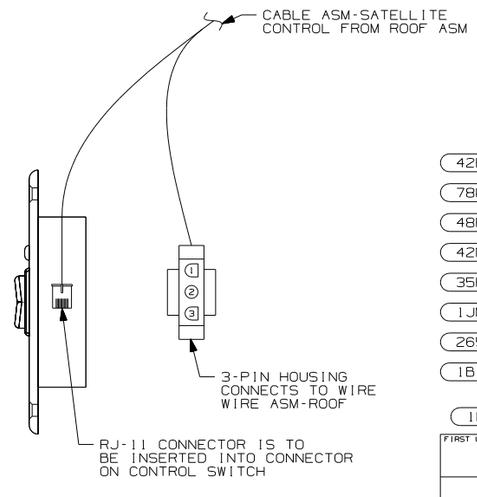

DETAIL CD (78K)

8 USED ON G37B ONLY WITH (42N) & (42E)

7 MOUNT SPEAKER & BRACKET TO REMOVABLE SPEAKER COVER ON SIDE OF OVHD CABINET

6 SEE ROOF ASM FOR ADDITIONAL INFORMATION.

5 PARTS ARE SUPPLIED WITH SATELLITE KIT 154474-02-000.

4 ROUTE 110V AND 12V WIRES IN OPPOSITE ENDS OF ELECTRICAL BOX.

3. WHERE WIRES PASS THROUGH HOLES IN STEEL AND NOT OTHERWISE PROTECTED, USE GROMMET 92908-02-000.

2. ALL WIRES TO BE SECURED WITH CLAMP 10495-01-000 OR CLIP 80734-01-000 EVERY 600MM. USE SCREW G67-10-12B UNLESS OTHERWISE SPECIFIED.

1. 110V WIRE TO BE CLAMPED WITH CLAMP 10497-05-000 WITHIN 200MM OF OUTLET BOXES, USE SCREW G67-10-12B.

NOTES:

(42E) TV-27" COLOR, STEREO W/REMOTE
(78K) SATELLITE DISH-AUTOMATIC
(48R) SAT SYS IN-MOTION W/O RCVR
(42N) TV(FRONT)-27" COLOR STEREO
(35P) VIDEO SELECTION SYSTEM
(1JM) HOME THEATER SOUND SYSTEM
(265) CODES/STANDARDS-CSA/CMVSS
(1B1) CODES/STANDARDS USA

(1B1) (265) 07 G-SERIES

FIRST USED 07 A-BODIES

DO NOT SCALE DRAWING

TITLE: WIRING INSTL-TV/DVD, FRONT

SHEET 3 | PART NO 156325 | REV

DWG NO 156325

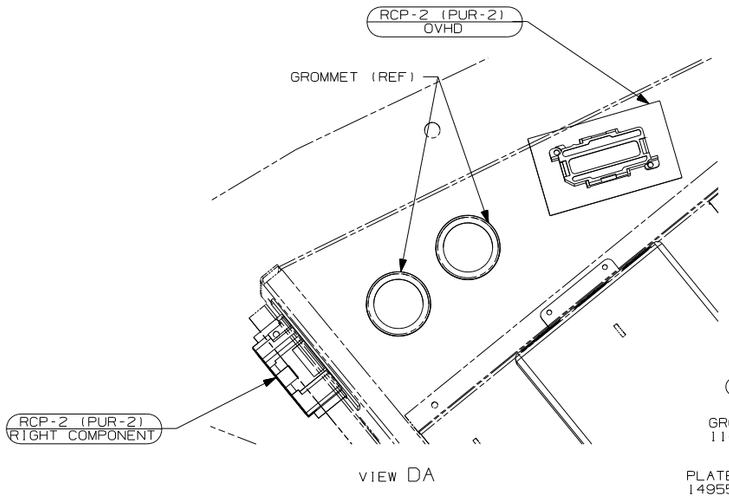

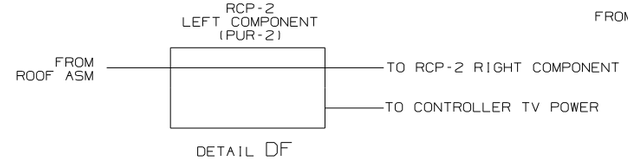

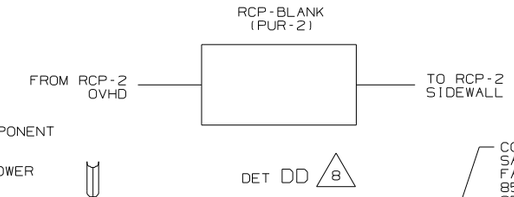

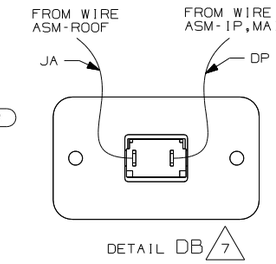

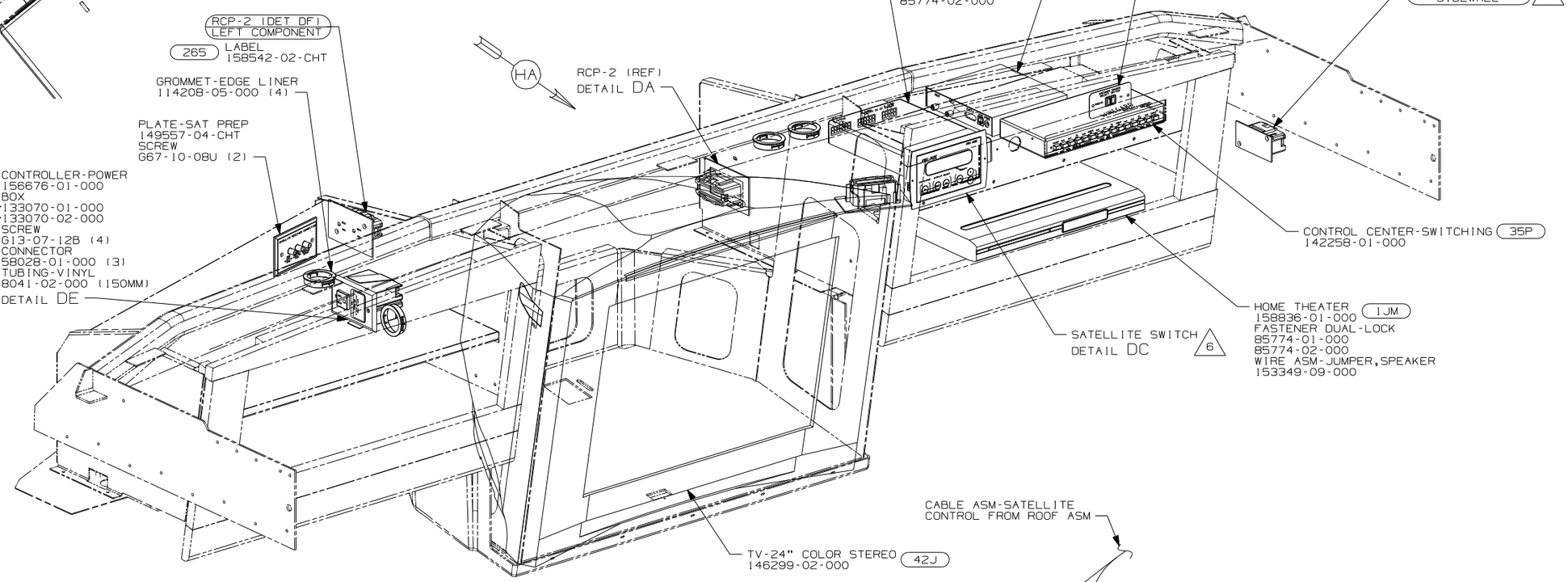

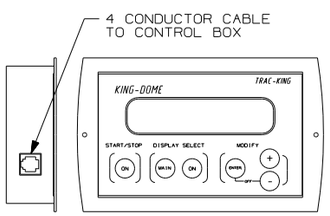

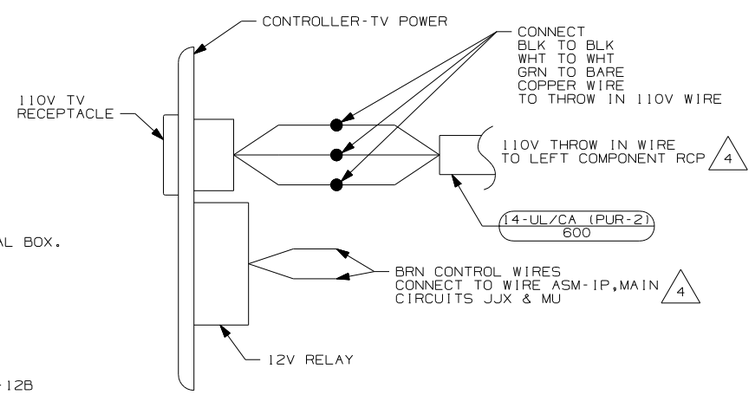

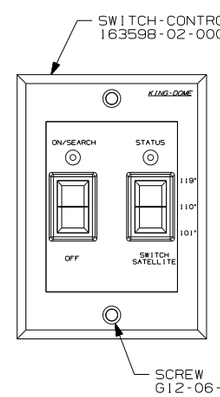

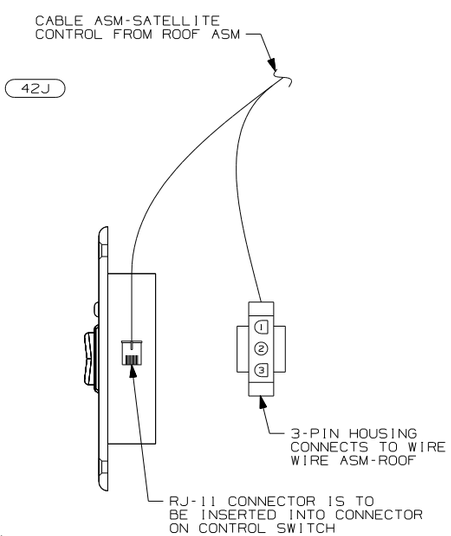

NOTES:

8. USED ON P39K ONLY.
7. REMOVE VINYL FROM CUTOUT AT INSTALATION.
6. SEE ROOF ASM FOR ADDITIONAL INFORMATION.
5. ROUTE 110V AND 12V WIRES IN OPPOSITE ENDS OF ELECTRICAL BOX.
4. PARTS ARE SUPPLIED WITH SATELLITE KIT 154474-02-000.
3. WHERE WIRES PASS THROUGH HOLES IN STEEL AND NOT OTHERWISE PROTECTED, USE GROMMET 92908-02-000.
2. ALL WIRES TO BE SECURED WITH CLAMP 10495 OR 10497 OR WIRE TIE 8343 OR 108046 EVERY 600MM, USE SCREW G67-10-12B UNLESS OTHERWISE SPECIFIED.
1. 110V WIRE TO BE CLAMPED WITH CLAMP 10497-05-000 WITHIN 200MM OF OUTLET BOXES, USE SCREW G67-10-12B.

79J INVERTER/CHARGER-1,500 WATT
78K SATELLITE DISH-AUTOMATIC
48R SAT SYS IN-MOTION W/O RCVR
42J TV-24" COLOR,STEREO W/REMOTE
35P VIDEO SELECTION SYSTEM
1JM HOME THEATER SOUND SYSTEM

07 P-SERIES

FIRST USED
07 A-BODIES

DO NOT SCALE DRAWING

TITLE:
WIRING INSTL-TV/DVD,FRONT

SHEET 4 | PART NO 156325 | REV

DWG NO 156325

WIRE ASM-ROOF

4 CONDUCTOR CABLE TO CONTROL BOX

DETAIL EA (48R) (5)

RCP-2 LEFT COMPONENT (PUR)
FROM ROOF ASM
TO RCP-2 RIGHT COMPONENT
TO CONTROLLER-TV POWER
DETAIL EE

SWITCH-SPEAKER 140062-01-000

SATELLITE SWITCH DETAIL EA (4)

(PUR) FROM ROOF

HOME THEATER
158836-01-000
FASTENER DUAL-LOCK
85774-01-000
85774-02-000
WIRE ASM-JUMPER,SPEAKER
153349-09-000
(1JM)

RCP-2 (PUR) RIGHT COMPONENT

(HA)

GROMMET-EDGE LINER
114208-05-000 (4)

RCP-2 DET EE LEFT COMPONENT

LABEL
158542-02-CHT (265)

PLATE-SAT PREP
149557-04-CHT
SCREW
G67-10-08U (2)

(11) SPEAKER
148026-03-CHT (2)
SCREW
G11-08-08B (8)
BRACKET-MOUNT, SPEAKER
149422-02-CHT (2)
SCREW
G67-08-21U (8)

LAMP-ROPE
146514-03-000
(CUT LENGTH OF 72 INCHES) (7) (9)

(8)

CONTROL CENTER-SWITCHING
142258-01-000
BRACKET-VIDEO SWITCH
156586-01-CHT
SCREW
G11-08-12U (4)
(10) (35P)

CONTROL-IN MOTION SATELLITE
FASTENER DUAL-LOCK
85774-01-000
85774-02-000
(5) (48R)

RCP-2 (PUR) OVHD

TV-27" COLOR STEREO
146298-02-000 (42N)

SWITCH
DETAIL EC

(8)

LAMP-ROPE
146514-03-000
(CUT LENGTH OF 72 INCHES) (7) (9)

CONTROLLER-POWER
156676-01-000
BOX
133070-01-000 (1B1)
133070-02-000 (265)
SCREW
G13-07-12B (4)
CONNECTOR
58028-01-000 (3)
TUBING-VINYL
8041-02-000 (150MM)
DETAIL ED

CONTROLLER-TV POWER

110V TV RECEPTACLE

CONNECT
BLK TO BLK
WHT TO WHT
GRN TO BARE
COPPER WIRE
TO THROW IN 110V WIRE

110V THROW IN WIRE TO LEFT COMPONENT RCP (6)

14-UL/CA (PUR)
600

BRN CONTROL WIRES CONNECT TO WIRE ASM-IP,MAIN CIRCUITS JJX & MU (6)

12V RELAY

DETAIL ED
(SHOWN FROM THE SIDE)

CABLE ASM-SATELLITE CONTROL FROM ROOF ASM

SWITCH-CONTROL
163598-02-000

SCREW
G12-06-12U

3-PIN HOUSING CONNECTS TO WIRE WIRE ASM-ROOF

RJ-11 CONNECTOR IS TO BE INSERTED INTO CONNECTOR ON CONTROL SWITCH

DETAIL EA (78K)

JC OR LLA KKP

SWITCH-ROCKER
135740-01-CHT
SWITCH-BASE
135741-01-CHT
SWITCH-BEZEL
135742-01-CHT
SCREW
G11-08-08U (2)

DETAIL EC

(11) SPEAKER WIRING FROM WIRE ASM-ROOF

(10) LOCATE BRACKET FLUSH TO THE FRONT OF THE SHELF & 220MM FROM THE LEFT SIDE.

(9) SNAP ROPE LAMP IN CHANNELS ON OVER HEAD CABINETS.

(8) PLACE CONNECTOR HERE TO MAKE CONNECTION TO MATING WIRE ASM.

(7) CUT ROPE LIGHT AT X MARKS ON LIGHT AND INSTALL CONNECTOR 146514-02-000.

(6) ROUTE 110V AND 12V WIRES IN OPPOSITE ENDS OF ELECTRICAL BOX.

(5) PARTS ARE SUPPLIED WITH SATELLITE KIT 154476-02-000.

(4) SEE ROOF ASM FOR ADDITIONAL INFORMATION.

NOTES:

3. WHERE WIRES PASS THROUGH HOLES IN STEEL AND NOT OTHERWISE PROTECTED, USE GROMMET 92908-02-000.

2. ALL WIRES TO BE SECURED WITH CLAMP 10495-01-000 OR CLIP 80734-01-000 EVERY 600MM. USE SCREW G67-10-12B UNLESS OTHERWISE SPECIFIED.

1. 110V WIRE TO BE CLAMPED WITH CLAMP 10497-05-000 WITHIN 200MM OF OUTLET BOXES, USE SCREW G67-10-12B.

(78K) SATELLITE DISH-AUTOMATIC
(48R) SAT SYS IN-MOTION W/O RCVR
(42N) TV(FRONT)-27" COLOR STEREO
(35P) VIDEO SELECTION SYSTEM
(1JM) HOME THEATER SOUND SYSTEM
(1D5) ENTERTAINMENT CENTR/EXT W/CD
(265) CODES/STANDARDS-CSA/CMVSS
(1B1) CODES/STANDARDS USA

(1B1) (265) 07 R-SERIES

FIRST USED
07 A-BODIES

DO NOT SCALE DRAWING

TITLE:
WIRING INSTL-TV/DVD,FRONT

SHEET 5 | PART NO 156325 | REV

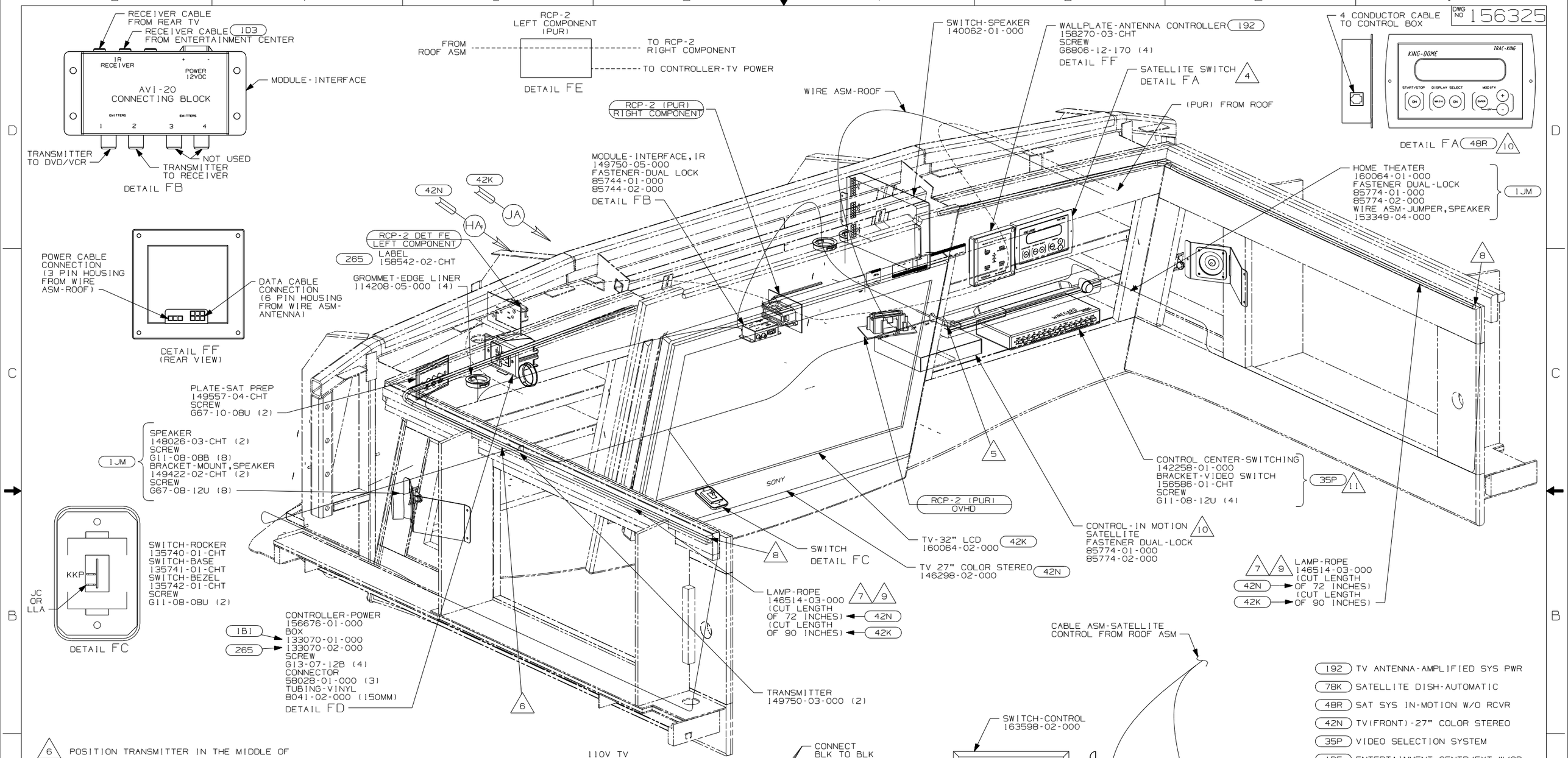

6 POSITION TRANSMITTER IN THE MIDDLE OF THE TOP SHELF, TOWARD OUTER EDGE OF SHELF.

5 POSITION TRANSMITTER ON THE FRONT LEFT SIDE OF THE DVD/VCR USING TIE-MOUNT 155366-01-000 AND TIE-WIRE 8343-01-000 45MM UP FROM THE BOTTOM TO LINE UP WITH THE RECEIVER EYE.

4 SEE ROOF ASM FOR ADDITIONAL INFORMATION.

3. WHERE WIRES PASS THROUGH HOLES IN STEEL AND NOT OTHERWISE PROTECTED, USE GROMMET 92908-02-000.

2. ALL WIRES TO BE SECURED WITH CLAMP 10495-01-000 OR CLIP 80734-01-000 EVERY 600MM. USE SCREW G67-10-12B UNLESS OTHERWISE SPECIFIED.

1. 110V WIRE TO BE CLAMPED WITH CLAMP 10497-05-000 WITHIN 200MM OF OUTLET BOXES, USE SCREW G67-10-12B.

NOTES:

12 ROUTE 110V AND 12V WIRES IN OPPOSITE ENDS OF ELECTRICAL BOX.

11 LOCATE BRACKET FLUSH TO THE FRONT OF THE SHELF & 220MM FROM THE LEFT SIDE.

10 PARTS ARE SUPPLIED WITH SATELLITE KIT 154476-02-000.

9 SNAP ROPE LAMP IN CHANNELS ON OVER HEAD CABINETS.

8 PLACE CONNECTOR HERE TO MAKE CONNECTION TO MATING WIRE ASM.

7 CUT ROPE LIGHT AT X MARKS ON LIGHT AND INSTALL CONNECTOR 146514-02-000.

1B1 265 07 S-SERIES

FIRST USED 07 A-BODIES

DO NOT SCALE DRAWING

TITLE: WIRING INSTL-TV/DVD, FRONT

SHEET 6 PART NO 156325 REV

DWG NO 156325

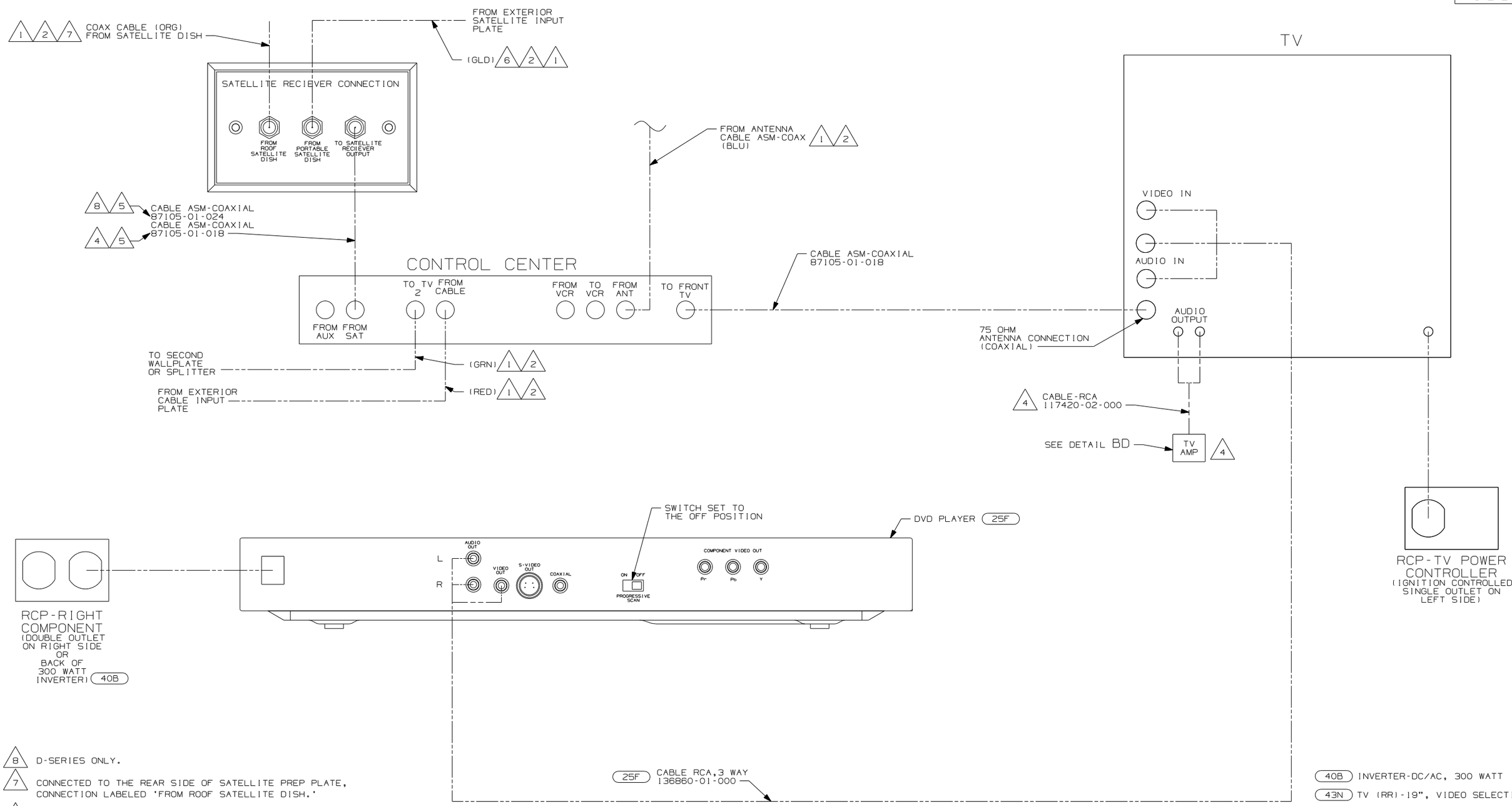

DETAIL GA

NOTES:

1. CABLE ASM MARKED WITH COLORED TAPE.
2. CABLE ROUTED IN ROOF.
3. CABLE IS SUPPLIED WITH RECEIVER.
4. F-SERIES ONLY
5. CONNECTED TO THE FRONT SIDE OF SATELLITE PREP PLATE, CONNECTION LABELED 'TO SATELLITE RECEIVER OUTPUT.'
6. CONNECTED TO THE REAR SIDE OF SATELLITE PREP PLATE, CONNECTION LABELED 'FROM PORTABLE SATELLITE DISH.'
7. CONNECTED TO THE REAR SIDE OF SATELLITE PREP PLATE, CONNECTION LABELED 'FROM ROOF SATELLITE DISH.'
8. D-SERIES ONLY.

40B INVERTER-DC/AC, 300 WATT
43N TV (RR)-19", VIDEO SELECTION
25F DIGITAL VIDEO DISC PLAYER
265 CODES/STANDARDS-CSA/CMVSS
1B1 CODES/STANDARDS USA

FOR ELECTRICAL TORQUE SPECIFICATIONS SEE DWG NO. 128783-01-000

X-X FOR ELECTRICAL CALLOUTS SEE DWG NO. 121339-01-000

1B1 265 D & F-SERIES

FIRST USED 07 A-BODIES

DO NOT SCALE DRAWING

TITLE: WIRING INSTL-TV/DVD,FRONT

SHEET 7 PART NO 156325 REV

DWG NO 156325

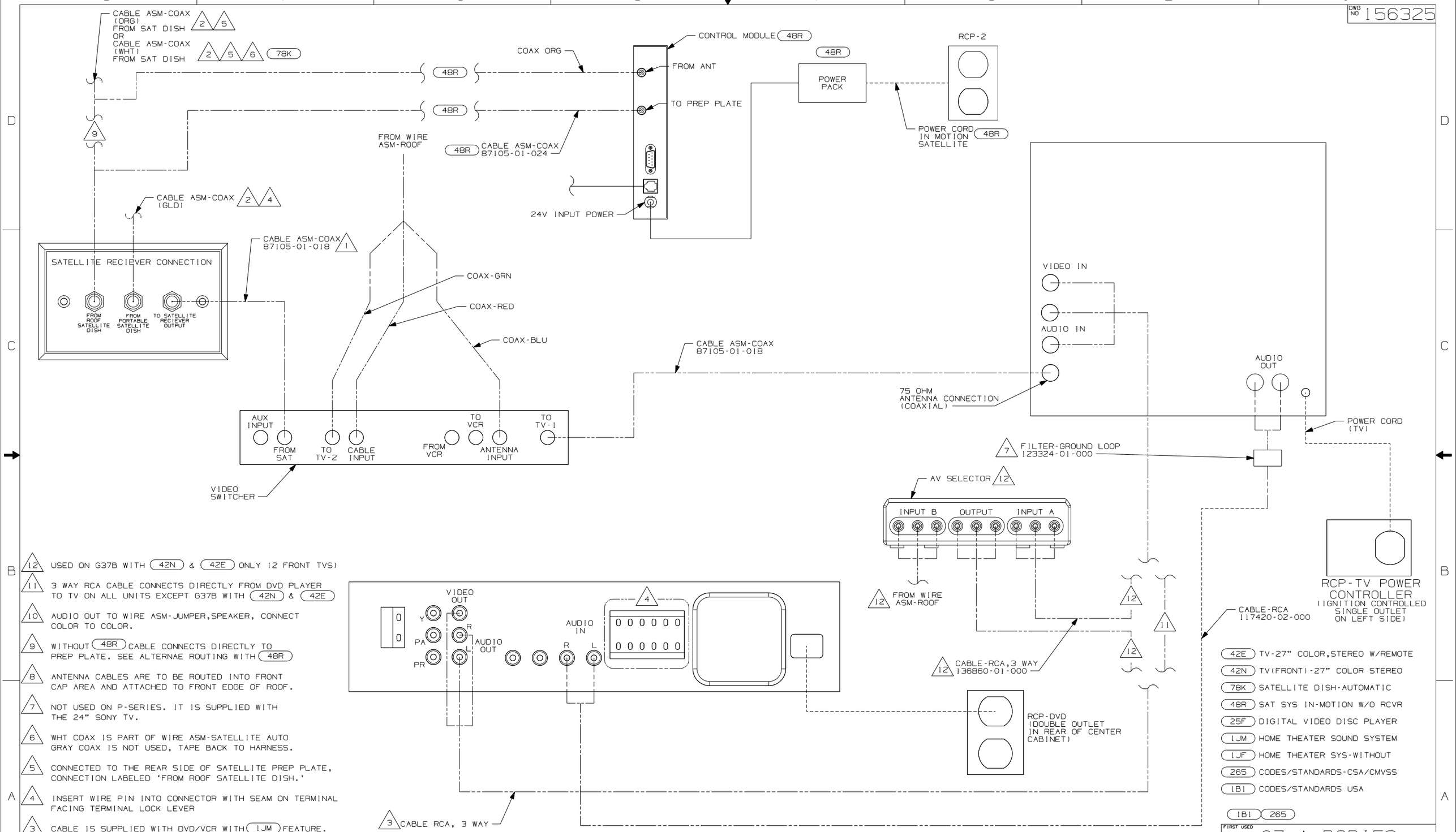

12 USED ON G37B WITH 42N & 42E ONLY (2 FRONT TVS)

11 3 WAY RCA CABLE CONNECTS DIRECTLY FROM DVD PLAYER TO TV ON ALL UNITS EXCEPT G37B WITH 42N & 42E

10 AUDIO OUT TO WIRE ASM-JUMPER,SPEAKER, CONNECT COLOR TO COLOR.

9 WITHOUT 48R CABLE CONNECTS DIRECTLY TO PREP PLATE. SEE ALTERNAE ROUTING WITH 48R

8 ANTENNA CABLES ARE TO BE ROUTED INTO FRONT CAP AREA AND ATTACHED TO FRONT EDGE OF ROOF.

7 NOT USED ON P-SERIES. IT IS SUPPLIED WITH THE 24" SONY TV.

6 WHT COAX IS PART OF WIRE ASM-SATELLITE AUTO GRAY COAX IS NOT USED, TAPE BACK TO HARNESS.

5 CONNECTED TO THE REAR SIDE OF SATELLITE PREP PLATE, CONNECTION LABELED 'FROM ROOF SATELLITE DISH.'

4 INSERT WIRE PIN INTO CONNECTOR WITH SEAM ON TERMINAL FACING TERMINAL LOCK LEVER

3 CABLE IS SUPPLIED WITH DVD/VCR WITH 1JM FEATURE.

2 CABLE ROUTED IN ROOF.

1 CONNECTED TO THE REAR SIDE OF SATELLITE PREP PLATE, CONNECTION LABELED 'TO SATELLITE RECEIVER OUTPUT.'

NOTES:

42E TV-27" COLOR,STEREO W/REMOTE
42N TV(FRONT)-27" COLOR STEREO
78K SATELLITE DISH-AUTOMATIC
48R SAT SYS IN-MOTION W/O RCVR
25F DIGITAL VIDEO DISC PLAYER
1JM HOME THEATER SOUND SYSTEM
1JF HOME THEATER SYS-WITHOUT
265 CODES/STANDARDS-CSA/CMVSS
1B1 CODES/STANDARDS USA

DETAIL HA 1JM

FOR ELECTRICAL TORQUE SPECIFICATIONS SEE DWG NO. 128783-01-000

X-X FOR ELECTRICAL CALLOUTS SEE DWG NO. 121339-01-000

1B1 265

FIRST USED 07 A-BODIES

DO NOT SCALE DRAWING

TITLE: WIRING INSTL-TV/DVD,FRONT

SHEET 8 PART NO 156325 REV

DWG NO 156325

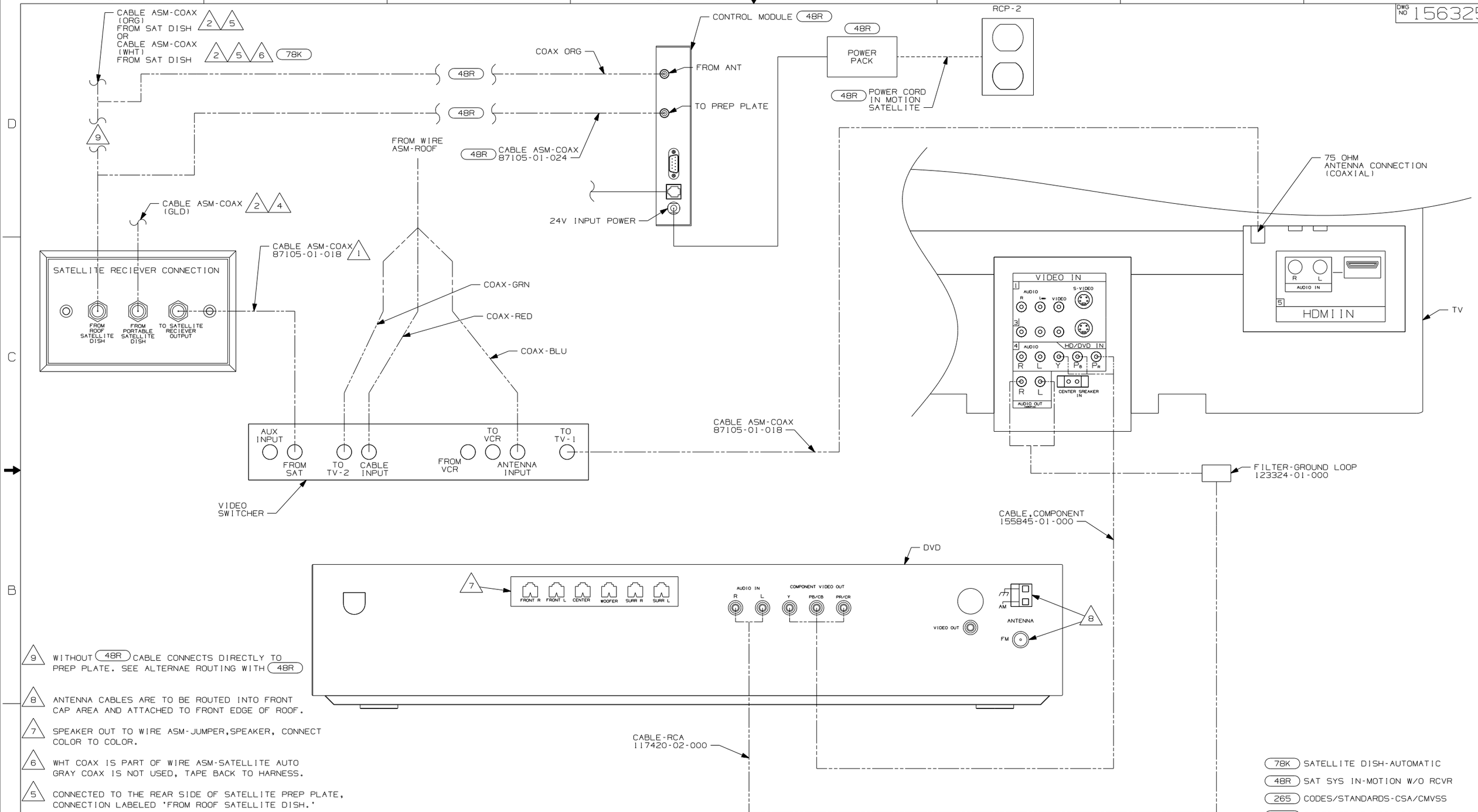

9 WITHOUT 48R CABLE CONNECTS DIRECTLY TO PREP PLATE. SEE ALTERNAE ROUTING WITH 48R

8 ANTENNA CABLES ARE TO BE ROUTED INTO FRONT CAP AREA AND ATTACHED TO FRONT EDGE OF ROOF.

7 SPEAKER OUT TO WIRE ASM-JUMPER,SPEAKER, CONNECT COLOR TO COLOR.

6 WHT COAX IS PART OF WIRE ASM-SATELLITE AUTO GRAY COAX IS NOT USED, TAPE BACK TO HARNESS.

5 CONNECTED TO THE REAR SIDE OF SATELLITE PREP PLATE, CONNECTION LABELED 'FROM ROOF SATELLITE DISH.'

4 INSERT WIRE PIN INTO CONNECTOR WITH SEAM ON TERMINAL FACING TERMINAL LOCK LEVER

3 CABLE IS SUPPLIED WITH DVD/VCR.

2 CABLE ROUTED IN ROOF.

1 CONNECTED TO THE REAR SIDE OF SATELLITE PREP PLATE, CONNECTION LABELED 'TO SATELLITE RECEIVER OUTPUT.'

NOTES:

78K SATELLITE DISH-AUTOMATIC
48R SAT SYS IN-MOTION W/O RCVR
265 CODES/STANDARDS-CSA/CMVSS
1B1 CODES/STANDARDS USA

DETAIL JA

FOR ELECTRICAL TORQUE SPECIFICATIONS SEE DWG NO. 128783-01-000

X-X FOR ELECTRICAL CALLOUTS SEE DWG NO. 121339-01-000

1B1 265

FIRST USED 07 A-BODIES

DO NOT SCALE DRAWING

TITLE: WIRING INSTL-TV/DVD,FRONT

SHEET 9 PART NO 156325 REV

DWG NO 156325

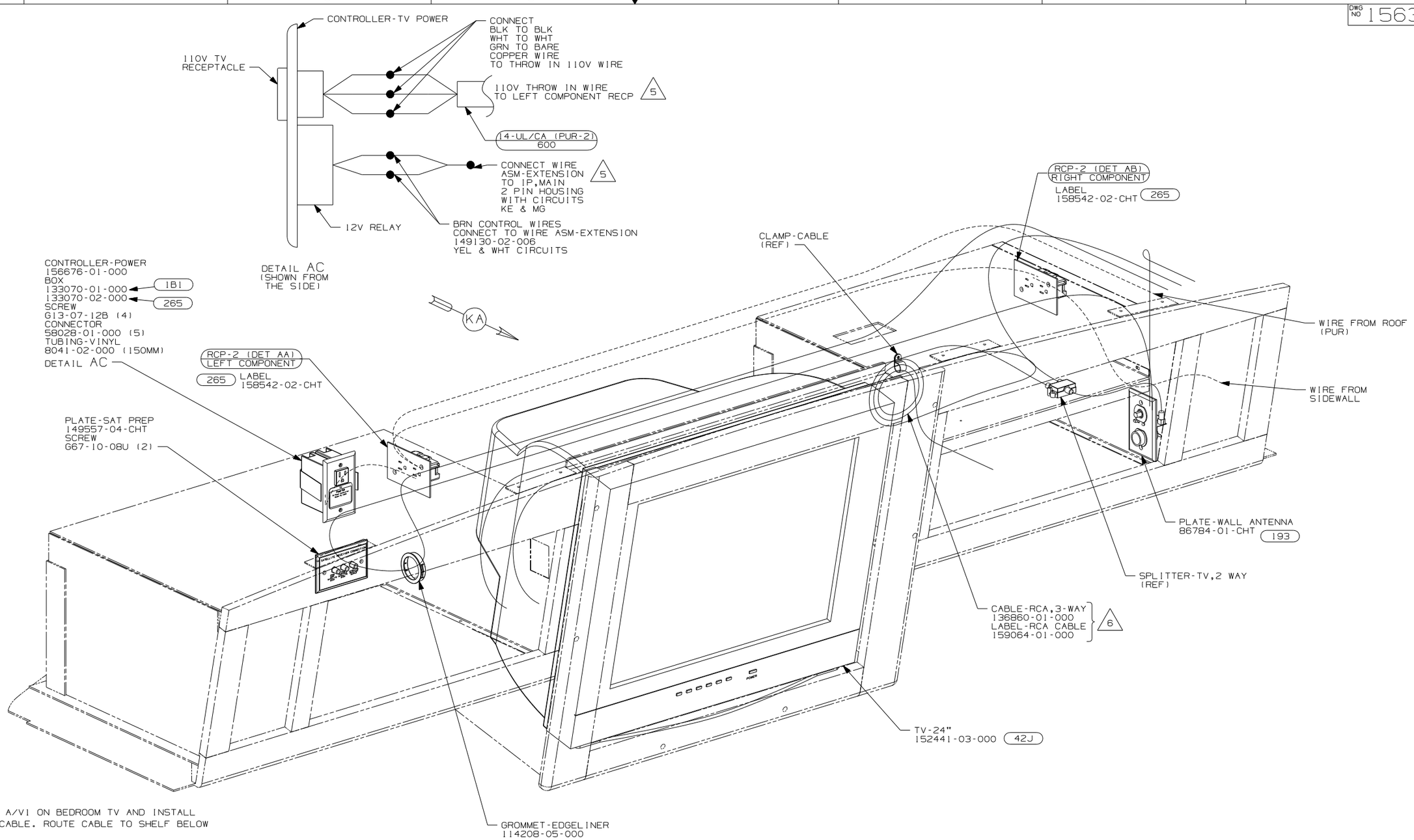

6 CONNECT RCA CABLE TO A/V1 ON BEDROOM TV AND INSTALL LABEL ON END OF RCA CABLE. ROUTE CABLE TO SHELF BELOW TV AND COIL FOR USE.

5 ROUTE 110V AND 12V WIRES IN OPPOSITE ENDS OF ELECTRICAL BOX.

4 SLIDE INVERTER AND VIDEO SWITCH INTO RAILS PROVIDED ON SHELF ASM.

3. WHERE WIRES PASS THROUGH HOLES IN STEEL AND NOT OTHERWISE PROTECTED, USE GROMMET 92908-02-000.

2. ALL WIRES TO BE SECURED WITH CLAMP 10495-01-000 OR CLIP 80734-01-000 EVERY 600MM. USE SCREW G67-10-12B UNLESS OTHERWISE SPECIFIED.

1. 110V WIRE TO BE CLAMPED WITH CLAMP 10497-05-000 WITHIN 200MM OF OUTLET BOXES, USE SCREW G67-10-12B.

NOTES:

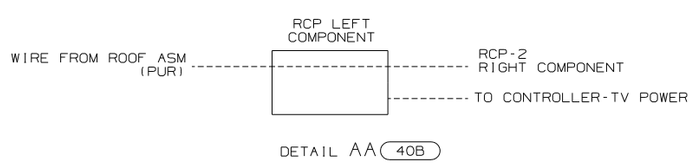

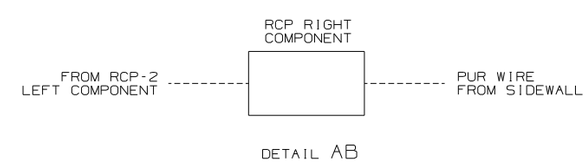

42J TV-24" COLOR,STEREO W/REMOTE

193 TV ANTENNA-AMPLIFIED SYSTEM

265 CODES/STANDARDS-CSA/CMVSS

181 CODES/STANDARDS-USA

181 265 07 E-SERIES

FIRST USED

07 A-BODIES

DO NOT SCALE DRAWING

TITLE: WIRING INSTL-TV/DVD,FRONT

SHEET 10 | PART NO 156325 | REV

DWG NO 156325

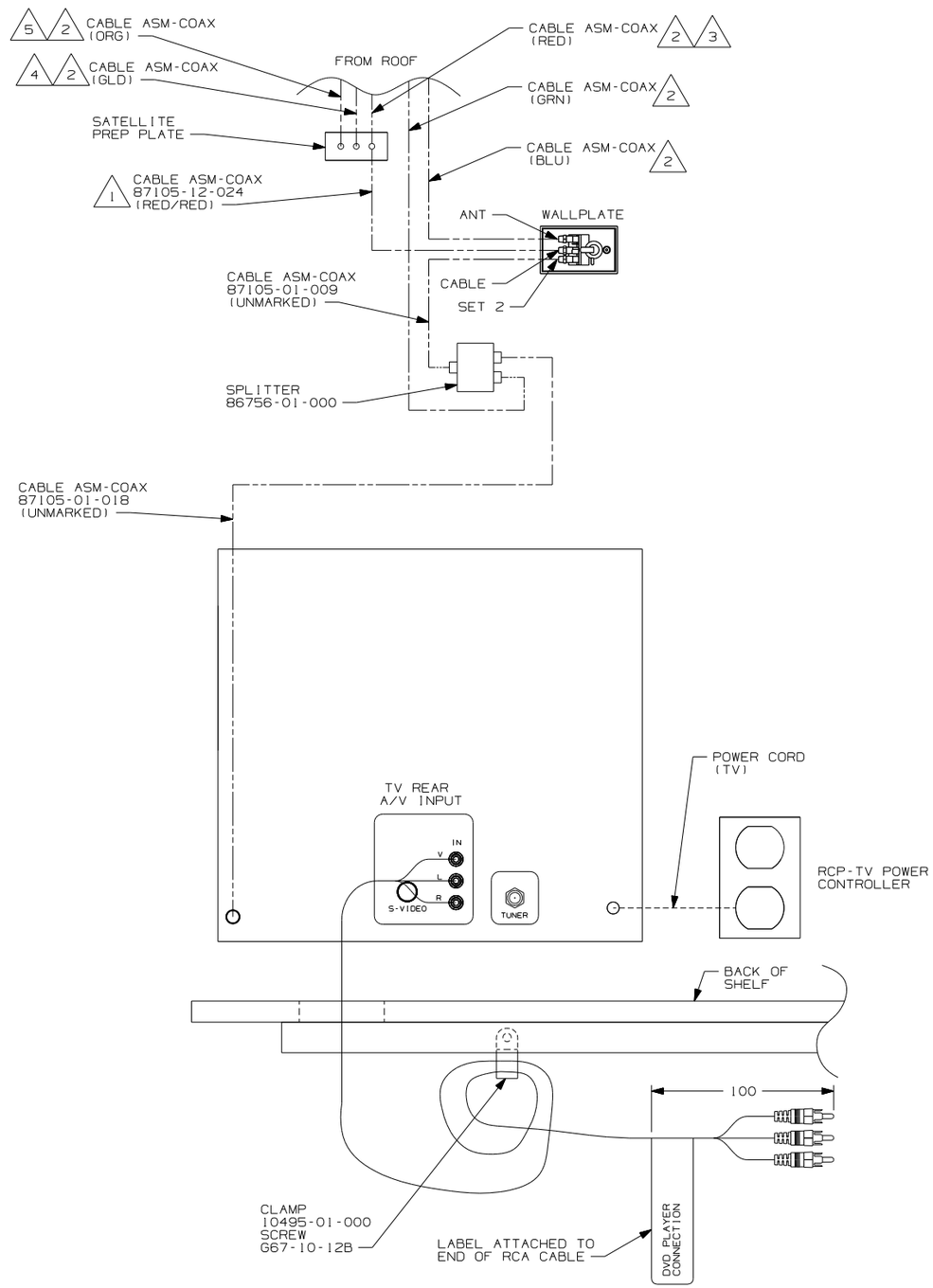

DETAIL KA

5 CONNECTED TO THE REAR SIDE OF SATELLITE PREP PLATE, CONNECTION LABELED 'FROM ROOF SATELLITE DISH.'

4 CONNECTED TO THE REAR SIDE OF SATELLITE PREP PLATE, CONNECTION LABELED 'FROM PORTABLE SATELLITE DISH.'

3 CONNECTED TO THE FRONT SIDE OF SATELLITE PREP PLATE, CONNECTION LABELED 'TO SATELLITE RECEIVER OUTPUT.'

2 CABLE ROUTED IN ROOF.

1 CONNECTED TO THE REAR SIDE OF SATELLITE PREP PLATE, CONNECTION LABELED 'TO SATELLITE RECEIVER OUTPUT.'

NOTES:

265 CODES/STANDARDS-CSA/CMVSS

1B1 CODES/STANDARDS USA

1B1 265 E-SERIES

FIRST USED 07 A-BODIES

DO NOT SCALE DRAWING

FOR ELECTRICAL TORQUE SPECIFICATIONS SEE DWG NO. 128783-01-000

X-X FOR ELECTRICAL CALLOUTS SEE DWG NO. 121339-01-000

TITLE: WIRING INSTL-TV/DVD,FRONT

SHEET 11 PART NO 156325 REV

RELEASE	REV A	DATE	DWG NO 121339

REV	ZONE	REVISION RECORD	DATE	DFTR-ORIG

TERMINALS

NO.	PART NUMBER	DESCRIPTION
B-1	50003-01	TERMINAL-PIN, 16-14 GA,.156 DIA
B-2	50004-01	TERMINAL-RECP, 16-14 GA,.156 DIA
B-11	50003-02	TERMINAL-PIN, 16-14 GA,.180 DIA
B-12	50004-02	TERMINAL-RECP, 16-14 GA,.180 DIA
WP-1	106950-01	TERMINAL-PIN, 16-14 GA
WP-2	106950-02	TERMINAL-PIN, 10-12 GA
WP-3	106950-03	TERMINAL-PIN, 8 GA
R-1	35416-01	TERMINAL-RING, #10 STD, 8 GA
R-2	35416-02	TERMINAL-RING, #10 STD, 6 GA
R-3	35416-03	TERMINAL-RING, #10 STD, 10-12 GA
R-4	35416-04	TERMINAL-RING, #10 STD, 14-16 GA
R-5	37018-01	TERMINAL-RING, 5/16 STD, 12-10 GA
R-6	102777-01	TERMINAL-RING, #6 STD, 14-16 GA
R-7	102777-02	TERMINAL-RING, #6 STD, 10-12 GA
R-8	102777-03	TERMINAL-RING, #6 STD, 8 GA
R-9	33787-01	TERMINAL-RING, #10 STD, 14 GA
R-60	8325-01	TERMINAL-RING, 1/4 STD, 14-16 GA
R-61	8326-01	TERMINAL-RING, 3/8 STD, 14-16 GA
R-62	8327-01	TERMINAL-RING, #10 STD, 14-16 GA
R-63	8328-01	TERMINAL-RING, #10 STD, 10-12 GA
R-64	8328-02	TERMINAL-RING, 3/8 STD, 10-12 GA
R-65	8329-01	TERMINAL-RING, 3/8 STD, 8 GA
R-66	8331-01	TERMINAL-RING, 3/8 STD, 4 GA
R-67	8332-01	TERMINAL-RING, 1/4 STD, 6 GA
R-68	8332-02	TERMINAL-RING, 1/4 STD, 10 GA
R-69	8350-01	TERMINAL-RING, 3/8 STD, 6 GA
R-70	99275-02	TERMINAL-RING, 7/16 STD, 8 GA
R-71	101397-01	TERMINAL-RING, #10 STD, 14-16 GA
R-91	88791-01	TERMINAL-RING, 3/8, 90°, 1/0 GA
R-92	88791-02	TERMINAL-RING, 3/8, 90°, 2 GA
R-93	8348-01	TERMINAL-RING, 3/8 STD, 2 GA
R-94	99275-01	TERMINAL-RING, 7/16 STD, 1/0 GA
RF-51	7944-01	TERMINAL-SPADE, 12-10 GA, #8 STUD
RF-52	7945-01	TERMINAL-SPADE, 18-14 GA, #8 STUD
TR-1	47443-01	TERMINAL-RECP, 16-14 GA,.25, INS
TR-2	47443-02	TERMINAL-RECP, 12-10 GA,.25, INS
TR-3	47443-05	TERMINAL-RECP, 22-18 GA,.25, INS
TR-11	47443-03	TERMINAL-RECP, 16-14 GA,.19, INS
TR-12	47443-04	TERMINAL-RECP, 16-14 GA,.11, INS
TR-21	80015-01	TERMINAL-RECP, 22-18 GA,.250, 90 DEG FOR USE WITH TAB THICKNESS .032
TR-22	80015-02	TERMINAL-RECP, 16-14 GA,.187, 90 DEG FOR USE WITH TAB THICKNESS .032
TR-23	80015-03	TERMINAL-RECP, 16-14 GA,.250, 90 DEG FOR USE WITH TAB THICKNESS .032
TR-24	80015-04	TERMINAL-RECP, 16-14 GA,.187, 90 DEG FOR USE WITH TAB THICKNESS .020
TR-51	7940-01	TERMINAL-RECP, 16-12 GA,.25, UNINS
TR-52	23809-01	TERMINAL-RECP, 16-14 GA,.19, UNINS
TR-53	23809-02	TERMINAL-RECP, 18-20 GA,.25, UNINS
TR-54	49270-01	TERMINAL-RECP, 18-20 GA,.19, UNINS
TR-55	7940-02	TERMINAL-RECP, 10 GA, .25, UNINS
TT-1	85745-02	TERMINAL-TAB, 16-14 GA,.25, INS
TT-2	85745-03	TERMINAL-TAB, 10-12 GA,.25, INS
TT-11	85745-04	TERMINAL-TAB, 18-22 GA,.19, INS
TT-51	7942-01	TERMINAL-TAB, 16-14 GA,.25, UNINS
TT-52	7943-01	TERMINAL-TAB, 14-10 GA,.25, UNINS
MF6-1	129236-01	TERMINAL-FEM, M/P, 630, 10-12
MF6-2	129236-02	TERMINAL-FEM, M/P, 630, 14-16

SPLICES

NO.	PART NUMBER	DESCRIPTION
BS-1	31876-01	SPLICE-BUTT, 16-14 GA, BLUE
BS-2	31876-02	SPLICE-BUTT, 12-10 GA, YELLOW
BS-3	31876-03	SPLICE-BUTT, 22-18 GA, RED
BS-SB	100070-01	SPLICE-BUTT, 14-16 GA, SHRINK,BLUE
BS-RB	112823-01	SPLICE-BUTT, 14-22 GA, REDUCER
S-1	7946-01	SPLICE, 1-6 MM²
S-2	23808-01	SPLICE, 6-9 MM²
I-2	7956-02	SHRINK WRAP .375 DIA
I-5	7956-05	SHRINK WRAP .25 DIA
SH-1	58028-01	SPLICE-HAT
S-10	101173-01	SPLICE-BARREL, 26300 CMA

NO.	PART NUMBER	DESCRIPTION
SP-1	90986-02	PLUG ASM-ELECTRIC STEP
SP-2	142524-01-000 098261-01-000 098262-07-000 098261-02-000 (3) 098262-01-000 (3)	HOUSING-4 PIN SOCKET-CONNECTOR SEAL-CONNECTOR SOCKET-CONNECTOR SEAL-CONNECTOR
HR-1	63910-01	HOUSING-RELAY
MP-8 MP-10 MPP CAV-1 CON-3	125323-02 125323-01 125324-01 125325-01 98262-03	HOUSING-PIN, 8 CAVITY HOUSING-PIN, 10 CAVITY TERMINAL-MALE, M/P, 150 SEAL-CAVITY, 150-SERIES M/P SEAL-CONNECTOR
LS-8 LS-10	125323-03 125323-04	LOCK-SECONDARY 8 POSITION LOCK-SECONDARY 10 POSITION
H-8 H-12	108355-01 108355-02	HOUSING-SWITCH, 8 POSITION HOUSING-SWITCH, 12 POSITION

NO.	PART NUMBER	DESCRIPTION
GEN-1	125323-02-000 125324-01-000 (4) 098262-03-000 (4) 125325-01-000 (4) 125323-03-000	HOUSING-8 POSN, MALE ,150 SERIES TERMINAL-MALE, M/P, 150 SEAL-CONNECTOR SEAL-CAVITY, 150 SERIES M/P LOCK-SECONDARY 8 POSITION
GEN-2	125323-01-000 125324-01-000 (5) 098262-03-000 (5) 125325-01-000 (5) 125323-04-000	HOUSING-10 POSN, MALE ,150 SERIES TERMINAL-MALE, M/P, 150 SEAL-CONNECTOR SEAL-CAVITY, 150 SERIES M/P LOCK-SECONDARY 10 POSITION

HOUSINGS AND TERMINALS

NO.	PART NUMBER	DESCRIPTION
HS-2	88474-10	HOUSING-SOCKET, 2 CAVITY
HS-3	88474-09	HOUSING-SOCKET, 3 CAVITY
HS-4	88474-08	HOUSING-SOCKET, 4 CAVITY
HS-5	88474-07	HOUSING-SOCKET, 5 CAVITY
HS-6	88474-06	HOUSING-SOCKET, 6 CAVITY
HS-7	88474-05	HOUSING-SOCKET, 6 CAVITY-IN LINE
HS-9	88474-03	HOUSING-SOCKET, 9 CAVITY
HS-12	88474-01	HOUSING-SOCKET, 12 CAVITY
HS-15	88474-02	HOUSING-SOCKET, 15 CAVITY
HS-2-R	88474-12	HOUSING-SOCKET, 2 CAVITY-RED
HP-2	88473-10	HOUSING-PIN, 2 CAVITY
HP-3	88473-09	HOUSING-PIN, 3 CAVITY
HP-4	88473-08	HOUSING-PIN, 4 CAVITY
HP-5	88473-07	HOUSING-PIN, 5 CAVITY
HP-6	88473-06	HOUSING-PIN, 6 CAVITY
HP-7	88473-05	HOUSING-PIN, 6 CAVITY-IN LINE
HP-8	88473-04	HOUSING-PIN, 8 CAVITY-IN LINE
HP-9	88473-03	HOUSING-PIN, 9 CAVITY
HP-12	88473-01	HOUSING-PIN, 12 CAVITY
HP-15	88473-02	HOUSING-PIN, 15 CAVITY
HP-2-R	88473-15	HOUSING-PIN, 2 CAVITY-RED
HP-3-B	88473-12	HOUSING-PIN, 3 CAVITY-BLUE
HP-3-G	88473-13	HOUSING-PIN, 3 CAVITY-GREEN
HP-3-R	88473-14	HOUSING-PIN, 3 CAVITY-RED
TS-1	88476-01	SOCKET-CONNECTOR, 20-14 GA
TS-2	88476-02	SOCKET-CONNECTOR, 12-10 GA
TP-1	88475-01	PIN-CONNECTOR, 20-14 GA
TP-2	88475-02	PIN-CONNECTOR, 12-10 GA
HS2HA	137208-01	HOUSING-SOCKET, 2 CAVITY-HIGH AMP
HP2HA	137207-01	HOUSING-PIN, 2 CAVITY-HIGH AMP
TS-HA	137210-01	SOCKET-CONNECTOR, 10AWG HIGH AMP
TP-HA	137209-01	PIN-CONNECTOR, 10AWG HIGH AMP
H-HA	104100-01	HOUSING, 1 CAVITY 75 AMP
T-HA	104100-03	TERMINAL 10 AWG - 6 AWG 75 AMP

BALLOON CALLOUT LEGEND

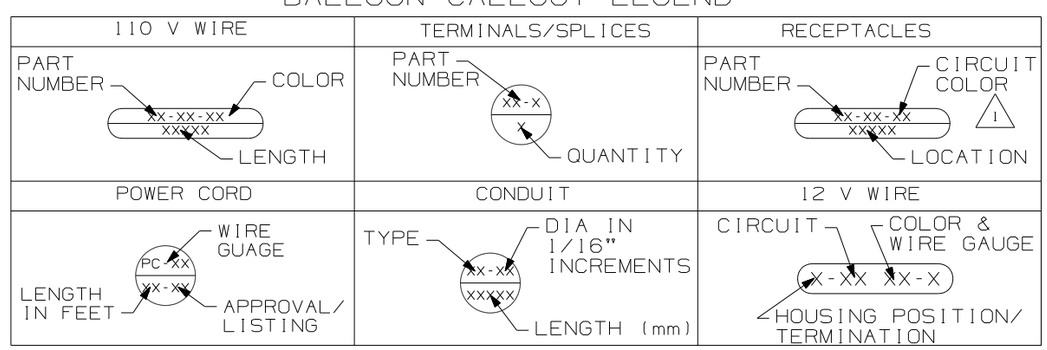

NOTES:

1. FOR RECP-BLANK, DET-X DENOTES DETAIL VIEW.
2. CONTACT WIRE PREP PRIOR TO USING FOR TOOLING PURPOSES.

DFTR	ORIG. DATE
CHKR	ALL DIMENSIONS ARE IN MILLIMETERS
P.E.	
M.E.	FIRST USED 96 MH'S
DSNR	
UNSPECIFIED TOLERANCES ARE: WHOLE DIM (X) : ONE-PLACE (X.X) : TWO-PLACE (X.XX) : ANGLE : THIRD ANGLE PROJECTION	MATERIAL:

DO NOT SCALE DRAWING

TITLE: PART LISTING-ELECTRICAL

SHEET 1 OF 7 | PART NO 121339 | REV

DWG NO 121339

WIRE-SINGLE INS CONDUCTOR, STRANDED

NO.	PART NUMBER	DESCRIPTION
18-W	156658-01	WIRE, 18 GA. WHITE, PVC
18-Y	156658-02	WIRE, 18 GA. YELLOW, PVC
16-Y	89360-01	WIRE, 16 GA. YELLOW, PVC
16-W	89360-02	WIRE, 16 GA. WHITE, PVC
14-Y	48554-02	WIRE, 14 GA. YELLOW, PVC
14-W	48554-04	WIRE, 14 GA. WHITE, PVC
12-Y	48555-02	WIRE, 12 GA. YELLOW, PVC
12-W	48555-04	WIRE, 12 GA. WHITE, PVC
10-Y	8000-03	WIRE, 10 GA. YELLOW, PVC
10-W	8000-05	WIRE, 10 GA. WHITE, PVC
8-B	8005-01	WIRE, 8 GA. BLACK, PVC
8-G	8005-03	WIRE, 8 GA. GREEN, PVC
6-B	70065-01	WIRE, 6 GA. BLACK, PVC
6-G	70065-03	WIRE, 6 GA. GREEN, PVC
18-WX	121015-01	WIRE, 18 GA. WHITE, XLPE
18-YX	121015-02	WIRE, 18 GA. YELLOW, XLPE
16-YX	116675-01	WIRE, 16 GA. YELLOW, XLPE
16-WX	116675-02	WIRE, 16 GA. WHITE, XLPE
14-YX	98586-01	WIRE, 14 GA. YELLOW, XLPE
14-WX	98586-02	WIRE, 14 GA. WHITE, XLPE
12-YX	98609-01	WIRE, 12 GA. YELLOW, XLPE
12-WX	98609-02	WIRE, 12 GA. WHITE, XLPE
10-YX	116676-03	WIRE, 10 GA. YELLOW, XLPE
10-WX	116676-04	WIRE, 10 GA. WHITE, XLPE
8-BX	116674-01	WIRE, 8 GA. BLACK, XLPE
8-GX	116674-02	WIRE, 8 GA. GREEN, XLPE
6-BX	116687-01	WIRE, 6 GA. BLACK, XLPE
6-GX	116687-02	WIRE, 6 GA. GREEN, XLPE

WIRE-NM SHEATHED CABLE

NO.	PART NUMBER	DESCRIPTION
14 UL	8027-01-000	WIRE 14-2 ROMEX W/GROUND (UL)
14 CA	8023-02-000	WIRE 14-2 ROMEX W/GROUND (CAN)
12 UL	8026-01-000	WIRE 12-2 ROMEX W/GROUND (UL)
12 CA	8023-01-000	WIRE 12-2 ROMEX W/GROUND (CAN)
12-3 UL	8026-03-000	WIRE 12-3 ROMEX W/GROUND (UL)
12-3 CA	8023-03-000	WIRE 12-3 ROMEX W/GROUND (CAN)
10 UL	8022-01-000	WIRE 10-2 ROMEX W/GROUND (UL)
10 CA	24743-01-000	WIRE 10-2 ROMEX W/GROUND (CAN)
6-3 UL	108914-01-000	WIRE 6-3 ROMEX W/GROUND (UL)
6-3 CA	113136-01-000	WIRE 6-3 ROMEX W/GROUND (CAN)
6-2 UL	108914-02-000	WIRE 6-2 ROMEX W/GROUND (UL)
4-3 UL	128375-01-000	WIRE 4-3 ROMEX W/GROUND (UL)
4-3 CA	128375-01-000	WIRE 4-3 ROMEX W/GROUND (CAN)

CONDUIT

NO.	PART NUMBER	DESCRIPTION	TEMP.
C-4	41953-07-000	CONDUIT-CONVOLUTE,SLIT .25"ID	194° F
C-6	41953-06-000	CONDUIT-CONVOLUTE,SLIT .38"ID	194° F
C-8	41953-01-000	CONDUIT-CONVOLUTE,SLIT .50"ID	194° F
C-10	41953-02-000	CONDUIT-CONVOLUTE,SLIT .63"ID	194° F
C-16	41953-03-000	CONDUIT-CONVOLUTE,SLIT 1.0"ID	194° F
C-24	41953-08-000	CONDUIT-CONVOLUTE,SLIT 1.5"ID	194° F
C-32	41953-15-000	CONDUIT-CONVOLUTE,SLIT 2.0"ID	194° F
CX-8	41953-09-000	CONDUIT-CONVOLUTE,SLIT .50"ID	239° F
CX-12	41953-10-000	CONDUIT-CONVOLUTE,SLIT .75"ID	239° F
CX-16	41953-11-000	CONDUIT-CONVOLUTE,SLIT 1.0"ID	239° F
CX-20	41953-13-000	CONDUIT-CONVOLUTE,SLIT 1.25"ID	239° F
CX-24	41953-14-000	CONDUIT-CONVOLUTE,SLIT 1.50"ID	239° F
CX-32	41953-16-000	CONDUIT-CONVOLUTE,SLIT 2.0"ID	239° F
CN-10	41953-05-000	CONDUIT-CONVOLUTE,NOT SLIT .63"ID	194° F
CN-16	41953-12-000	CONDUIT-CONVOLUTE,NOT SLIT 1.0"ID	194° F

POWER CORDS

NO.	PART NUMBER	DESCRIPTION
PC-10/28	8054-01-000	POWER CORD 10 GA, 30 AMP, 28 FT. (UL/CA)
PC-10/35	8054-02-000	POWER CORD 10 GA, 30 AMP, 35 FT. (UL/CA)
PC-10/30-CA	8052-01-000	SUPERCEEDED BY 8054-01-000
PC-6/36	108934-01-000	POWER CORD 6 GA, 50 AMP, 36 FT. (UL/CA)
PC-6/36-FX	108934-02-000	POWER CORD 6 GA, 50 AMP, 36 FT. (UL/CSA) SUPERFLEX
PC-6/36-CA	113096-01-000	SUPERCEEDED BY 108934-02-000

BATTERY CABLE LEGEND

COLOR	DESCRIPTION
PURPLE	CHASSIS BATTERY TO SOLENOID
BLUE	HYDRAULIC JACKS PUMP
RED	BATTERY TO STARTER
GREEN	BATTERY TO GENERATOR
YELLOW	COACH BATTERY TO SOLENOID

RECEPTACLES

NO.	PART NUMBER	DESCRIPTION
RCP-1	86738-02-CHT	RECEPTACLE-SINGLE, FLUSH MOUNT
RCP-2	86738-01-CHT	RECEPTACLE-DOUBLE, FLUSH MOUNT
RCP-3	58707-01-000	RECEPTACLE-SINGLE, SURFACE MOUNT
RCP-4	157360-01-000	RECEPTACLE-SINGLE,SURFACE MOUNT,20A
RCP-5	160984-01-CHT	RECEPTACLE-SINGLE,FLUSH MOUNT,20A
RCP-B	58707-02-000	RECEPTACLE-BLANK, JUNCTION
RCP-E	131826-01-CHT	INCLUDES COVER & GASKET

CIRCUIT COLOR LEGEND

110V CIRCUIT	WIRE COLOR	COAXIAL CIRCUIT
A/C CIRCUIT 1	RED	CABLE INPUT W/O SPLITTER
A/C CIRCUIT 2	GRN	REAR TV W/O SPLITTER
GENERAL RECPS 1	BLU	ANTENNA
GENERAL RECPS 2	BRN	FRONT TV
GENERAL RECPS 3	PUR	VCR INPUT
GENERAL RECPS 4	GRY	
REFRIGERATOR/ CONVERTER	YEL	EXT ENT CTR
MICROWAVE	BLK	AUX INPUT
WATER HEATER	WHT	
WASHER/DRYER	GLD	
DISHWASHER	SIL	
	ORG	SATELLITE PLATE INPUT
	ORG/ORG	SATELLITE PLATE OUTPUT
	RED/RED	CABLE INPUT W/SPLITTER
	GRN/GRN	REAR TV W/SPLITTER
	PUR/PUR	VCR OUTPUT

FIRST USED 96 MH'S

DO NOT SCALE DRAWING

TITLE: PART LISTING-ELECTRICAL

SHEET 2 PART NO 121339 REV

DWG NO 121339

LAMP ASM-PACKAGE,PANCAKE

NO	PART NUMBER	DESCRIPTION
LF1-1	LAMP 98024-01-CHT SCREW G11-08-16U (4) CONNECTOR 58028-01-000 (2)	LAMP ASM, FROSTED LENS, 1 BULB W/SWITCH PROGRESSIVE DYNAMICS INC.
LF2-1	LAMP 98024-03-CHT SCREW G11-08-16U (6) CONNECTOR 58028-01-000 (2)	LAMP ASM, FROSTED LENS, 2 BULB W/SWITCH PROGRESSIVE DYNAMICS INC.
LO1-1	LAMP 98024-05-CHT SCREW G11-08-16U (4) CONNECTOR 58028-01-000 (2)	LAMP ASM, OPTI CLEAR LENS, 1 BULB W/SWITCH PROGRESSIVE DYNAMICS INC.
LO2-1	LAMP 98024-06-CHT SCREW G11-08-16U (6) CONNECTOR 58028-01-000 (2)	LAMP ASM, OPTI CLEAR LENS, 2 BULB W/SWITCH PROGRESSIVE DYNAMICS INC.
LF1N1	LAMP 98024-07-CHT SCREW G11-08-16U (4) CONNECTOR 58028-01-000 (2)	LAMP ASM, FROSTED LENS, 1 BULB W/O SWITCH PROGRESSIVE DYNAMICS INC.
LF2N1	LAMP 98024-08-CHT SCREW G11-08-16U (6) CONNECTOR 58028-01-000 (2)	LAMP ASM, FROSTED LENS, 2 BULB W/O SWITCH PROGRESSIVE DYNAMICS INC.
LFSN1	LAMP 98024-09-CHT SCREW G11-08-16U (6) CONNECTOR 58028-01-000 (2)	LAMP ASM, SINGLE FROSTED LENS, 2 BULB W/O SWITCH PROGRESSIVE DYNAMICS INC.

LAMP ASM-PACKAGE,HALOGEN

NO	PART NUMBER	DESCRIPTION
HAL	LAMP 123775-01-CHT SCREW (SUPPLIED) CONNECTOR 58028-01-000 (2)	LAMP ASM-HALOGEN, READING 1 BULB
HAL-S	LAMP 123775-01-CHT SPACER 123775-02-CHT SCREW G13-06-16U (3) CONNECTOR 58028-01-000 (2)	LAMP ASM-HALOGEN, READING WITH 3/4" SPACER 1 BULB

LAMP ASM-PACKAGE,PANCAKE

NO	PART NUMBER	DESCRIPTION
LF1-2	LAMP 137417-01-CHT SCREW G11-08-16U (4) CONNECTOR 58028-01-000 (2)	LAMP ASM, FROSTED LENS, 1 BULB W/SWITCH PROGRESSIVE DYNAMICS INC.
LF2-2	LAMP 137417-04-CHT SCREW G11-08-16U (6) CONNECTOR 58028-01-000 (2)	LAMP ASM, FROSTED LENS, 2 BULB W/SWITCH PROGRESSIVE DYNAMICS INC.
LO1-2	LAMP 137417-02-CHT SCREW G11-08-16U (4) CONNECTOR 58028-01-000 (2)	LAMP ASM, OPTI CLEAR LENS, 1 BULB W/SWITCH PROGRESSIVE DYNAMICS INC.
LO2-2	LAMP 137417-05-CHT SCREW G11-08-16U (6) CONNECTOR 58028-01-000 (2)	LAMP ASM, OPTI CLEAR LENS, 2 BULB W/SWITCH PROGRESSIVE DYNAMICS INC.
LF1N2	LAMP 137417-03-CHT SCREW G11-08-16U (4) CONNECTOR 58028-01-000 (2)	LAMP ASM, FROSTED LENS, 1 BULB W/O SWITCH PROGRESSIVE DYNAMICS INC.
LFSN2	LAMP 137417-06-CHT SCREW G11-08-16U (6) CONNECTOR 58028-01-000 (2)	LAMP ASM, SINGLE FROSTED LENS, 2 BULB W/O SWITCH PROGRESSIVE DYNAMICS INC.

LAMP ASM-PACKAGE,PORCH

NO	PART NUMBER	DESCRIPTION
LEXT-1	LAMP 97917-01-CHT SCREW G67-10-129 (4) CONNECTOR 58028-01-000 (2)	LAMP ASM-PORCH, SURFACE MOUNT BARGMAN
LEXT-2UL	LAMP 8089-01-000 SCREW G68-06-10E (2) CONNECTOR 58028-01-000 (2)	LAMP ASM-PORCH, RECESSED UL LIST JRV PROD
LEXT-2CA	LAMP 8089-02-000 SCREW G68-06-10E (2) CONNECTOR 58028-01-000 (2)	LAMP ASM-PORCH, RECESSED CAN LIST JRV PROD

LEGEND

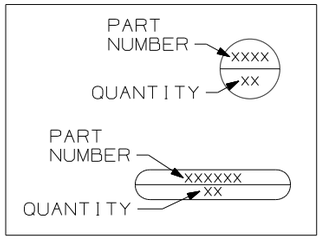

FIRST USED 96 MH'S

DO NOT SCALE DRAWING

TITLE: PART LISTING-ELECTRICAL

SHEET 3 | PART NO 121339 | REV

DWG NO 121339

LAMP ASM-PACKAGE,FLUORESCENT

NO	PART NUMBER	DESCRIPTION
FLU-1	LAMP 91936-02-CHT SCREW G11-08-12U (4) CONNECTOR 58028-01-000 (2)	LAMP ASM-FLUORESCENT 12" 2 BULB W/SWITCH THIN-LITE
FLU-2	LAMP 91936-01-CHT SCREW G11-08-12U (4) CONNECTOR 58028-01-000 (2)	LAMP ASM-FLUORESCENT 18" 2 BULB W/SWITCH THIN-LITE
FLU-3	LAMP 127327-01-CHT SCREW G11-08-12U (2) CONNECTOR 58028-01-000 (2)	LAMP ASM-FLUORESCENT 18" 1-12" BULB W/SWITCH THIN-LITE
FLU-4	LAMP 130338-01-CHT SCREW G11-08-12U (4) CONNECTOR 58028-01-000 (2)	LAMP ASM-FLUORESCENT 18" 2 BULB SURFACE MOUNT W/SWITCH THIN-LITE
FLU-5	LAMP 153464-02-CHT SCREW G11-08-12U (4) CONNECTOR 58028-01-000 (2)	LAMP ASM-FLUORESCENT 12" 2 BULB W/SWITCH COOL WHITE BULB THIN-LITE CUTOUT-122 X 336
FLU-6	LAMP 130338-02-CHT SCREW G11-08-12U (4) CONNECTOR 58028-01-000 (2)	LAMP ASM-FLUORESCENT 18" 2 BULB SURFACE MOUNT WARM WHITE BULB W/SWITCH THIN-LITE
FLU-7	LAMP 153464-05-CHT SCREW G11-08-12U (4) CONNECTOR 58028-01-000 (2)	LAMP ASM-FLUORESCENT 12" 2 BULB W/SWITCH WARM WHITE BULB THIN-LITE CUTOUT-122 X 336
FLUN1	LAMP 91936-04-CHT SCREW G11-08-12U (4) CONNECTOR 58028-01-000 (2)	LAMP ASM-FLUORESCENT 12" 2 BULB W/O SWITCH THIN-LITE
FLUN2	LAMP 91936-03-CHT SCREW G11-08-12U (4) CONNECTOR 58028-01-000 (2)	LAMP ASM-FLUORESCENT 18" 2 BULB W/O SWITCH THIN-LITE
FLUN3	LAMP 153464-01-CHT SCREW G11-08-12U (4) CONNECTOR 58028-01-000 (2)	LAMP ASM-FLUORESCENT 12" 2 BULB W/O SWITCH COOL WHITE BULB THIN-LITE CUTOUT-122 X 336

LAMP ASM-PACKAGE,FLUORESCENT

NO	PART NUMBER	DESCRIPTION
FLUN4	LAMP 153464-03-CHT SCREW G11-08-12U (6) CONNECTOR 58028-01-000 (2)	LAMP ASM-FLUORESCENT 18" 2 BULB W/O SWITCH COOL WHITE BULB THIN-LITE CUTOUT-122 X 480
FLUN5	LAMP 153464-06-CHT SCREW G11-08-12U (6) CONNECTOR 58028-01-000 (2)	LAMP ASM-FLUORESCENT 18" 2 BULB W/O SWITCH WARM WHITE BULB THIN-LITE CUTOUT-122 X 480
FLUN6	LAMP 153464-04-CHT SCREW G11-08-12U (6) CONNECTOR 58028-01-000 (2)	LAMP ASM-FLUORESCENT 12" 2 BULB W/O SWITCH WARM WHITE BULB THIN-LITE CUTOUT-122 X 336

LAMP ASM-PACKAGE,MAKEUP LAMP

NO	PART NUMBER	DESCRIPTION
LMU3-1	LAMP 110235-01-CHT SCREW W/SPACER (SUPPLIED) CONNECTOR 58028-01-000 (2)	LAMP ASM-MAKEUP (W/O MIRROR) 3 BULB (SUPPLIED) PROGRESSIVE DYNAMICS
LMM3-2	LAMP 123774-03-CHT SCREW (SUPPLIED) BULB 123918-01-000 (3) CONNECTOR 58028-01-000 (2)	LAMP ASM-MAKEUP (W/MIRROR) 3 BULB GUSTOFSON
LMU3-2	LAMP 138116-01-CHT SCREW (SUPPLIED) BULB 123918-01-000 (3) CONNECTOR 58028-01-000 (2)	LAMP ASM-MAKEUP (W/O MIRROR) 3 BULB GUSTOFSON
LMU3-3	LAMP 162446-01-CHT SCREW (SUPPLIED) BULB 123918-01-000 (3) CONNECTOR 58028-01-000 (2)	LAMP ASM-MAKEUP (W/O MIRROR) 3 BULB GUSTOFSON
LMU4-1	LAMP 110235-02-CHT SCREW G11-08-16U (2) CONNECTOR 58028-01-000 (2)	LAMP ASM-MAKEUP (W/O MIRROR) 4 BULB PROGRESSIVE DYNAMICS
LMU4-2	LAMP 138116-02-CHT SCREW (SUPPLIED) BULB 123918-01-000 (4) CONNECTOR 58028-01-000 (2)	LAMP ASM-MAKEUP (W/O MIRROR) 4 BULB GUSTOFSON
LMU4-3	LAMP 162446-02-CHT SCREW (SUPPLIED) BULB 123918-01-000 (4) CONNECTOR 58028-01-000 (2)	LAMP ASM-MAKEUP (W/O MIRROR) 4 BULB GUSTOFSON
LMM4-2	LAMP 123774-01-CHT SCREW G11-08-16U (2) BULB 123918-01-000 (4) CONNECTOR 58028-01-000 (2)	LAMP ASM-MAKEUP (W/MIRROR) 4 BULB GUSTOFSON

LAMP ASM-PACKAGE,OTHER

NO	PART NUMBER	DESCRIPTION
LSH-1	LAMP 121935-01-CHT SCREW G11-08-16U (4) CONNECTOR 58028-01-000 (2)	LAMP ASM-SHOWER PROGRESSIVE DYNAMICS INC.
LSH-2	LAMP 164039-01-CHT SCREW G11-08-16U (3) CONNECTOR 58028-01-000 (2)	LIGHT-DOME,SHOWER
LSH-3	LAMP 164040-01-CHT SCREW G13-07-12U (3) CONNECTOR 58028-01-000 (2)	LIGHT-DOME,SHOWER GLASS
LCR-1	LAMP 61424-01-000 SCREW G11-08-12U (4) CONNECTOR 58028-01-000 (2)	LAMP ASM-COURTESY,AISLE RAMCO (RECTANGULAR)
LCS-1	LAMP 108354-01-CHT SCREW G11-08-12U (4) CONNECTOR 58028-01-000 (2)	LAMP ASM-COURTESY,AISLE ITC MARINE (SQUARE)
READ-1	LIGHT-READING 132427-01-CHT SCREW SUPPLIED W/ LIGHT CLIP-U 141395-02-CHT (2) CONNECTOR 58028-01-000 (2)	LIGHT-READING,SWIVEL,ROUND 1 BULB
READ-2	LIGHT-READING 128786-02-CHT SCREW G11-08-16J (2) BULB 123917-01-000 CONNECTOR 58028-01-000 (2)	LIGHT,READING,SWIVEL

LEGEND

PART NUMBER — XXXX
QUANTITY — XX

PART NUMBER — XXXXXX
QUANTITY — XX

FIRST USED	96 MH'S
	DO NOT SCALE DRAWING
TITLE:	PART LISTING-ELECTRICAL
SHEET 4	PART NO 121339 REV

DWG NO 121339

ANTENNA ASM-PACKAGE

NO	PART NUMBER	DESCRIPTION
ANT-1	ANTENNA 76319-24-000 HARDWARE-INTERIOR 76319-25-000 BUMPER 69726-02-000 (2) CLIP 80734-02-000	ROOF MOUNT TV ANTENNA ASM 25.5" MAST 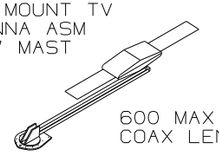 600 MAX COAX LENGTH
ANT-2	ANTENNA 76319-23-000 HARDWARE-INTERIOR 76319-25-000 BUMPER 69726-02-000 (2) ADAPTER SUPPLIED W/ANTENNA	ROOF MOUNT TV ANTENNA ASM 44.5" MAST 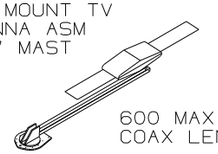 600 MAX COAX LENGTH
ANT-2W	ANTENNA 76319-23-000 HARDWARE-INTERIOR 76319-25-000 BUMPER 69726-02-000 (2) ADAPTER SUPPLIED W/ANTENNA WEDGE 76319-26-000	ROOF MOUNT TV ANTENNA ASM 44.5" MAST 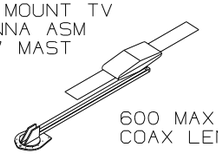 600 MAX COAX LENGTH
ANTA-1	ANTENNA 158270-01-CHT BUMPER 69726-02-000 (2) ADAPTER SUPPLIED W/ANTENNA	ROOF MOUNT TV ANTENNA ASM AUTOMATIC 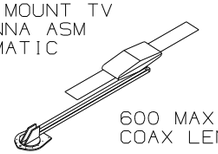 600 MAX COAX LENGTH
ANT-3	ANTENNA-TV ROOF MNT,ROUND 132935-01-000 PLATE-ROOF, CABLE ENTRY 146488-01-000 SCREW G67-10-129 (10) CABLE ASM-COAX 87105-01-006 ADAPTER 82134-01-000	ROOF MOUNT OMNI- DIRECTIONAL ANTENNA MOUNTING SCREWS SUPPLIED WITH ANTENNA 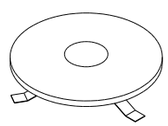

SENSORS

NO	PART NUMBER	DESCRIPTION
LPGD	LP GAS DETECTOR 150138-01-CHT SCREW G68-06-10U (2)	DETECTOR-LP GAS 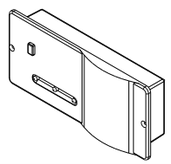

PANELS

NO	PART NUMBER	DESCRIPTION
SOLAR	PANEL-SOLAR 10 WATT 151647-01-000 SCREW G11-08-12U (4)	SOLAR PANEL 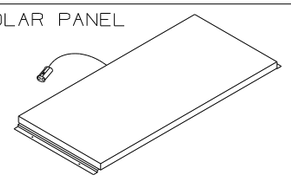

ANTENNA ASM-PACKAGE

ANTEXT-1	CABLE ASM-EXTENS 77069-02-000	RADIO ANTENNA CABLE EXTENSION 2400MM USABLE LENGTH 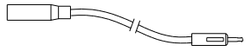
ANTKIT-1	ADAPTER-PLATE 76319-06-000 SCREW G11-08-08T (6) CLIP-WIRE 80734-02-000 SCREW G11-08-08T	PLATE ASM-ADAPTERS CABLE ROOF MOUNTING PLATE W/ CABLE-CABLE ADAPTER, FITTINGS, AND CABLE RETAINING CLIP 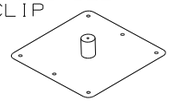
ANT-R	ANTENNA-RADIO 90944-01-000 EXTENDER-SHAFT ANTENNA 109889-04-000 BRACKET-ANTENNA GROUND 147741-01-CHT	ROOF MOUNT RADIO ANTENNA 
ANTEXT-2	CABLE ASM-EXTENS 77069-03-000	RADIO ANTENNA CABLE EXTENSION 6600 MM USABLE LENGTH

SATELLITE DISH INSTL

NO	PART NUMBER	DESCRIPTION
DM-1	SATELLITE DISH 137135-02-000 SCREW G67-10-12B (8) PLATE & BRACKET (SUPPLIED) SCREW G67-10-12B (10)	SATELLITE DISH ANTENNA ASM MANUAL SETUP 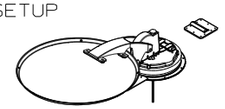
DA-1	SATELLITE DISH 163598-01-CHT PLATE-ROOF,CABLE ENTRY QUAD 146488-03-000 SCREW G67-10-12U (8) (FOR PLATE) SCREW G39-10-12U (12) (FOR SATELLITE DISH)	SATELLITE DISH ANTENNA ASM AUTOMATIC SETUP 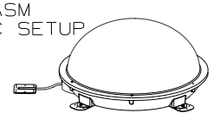
DI-1	SATELLITE DISH 154474-04-CHT SCREW G39-10-12B (12) PLATE 146488-01-000 SCREW G67-10-12B (10)	SATELLITE DISH ANTENNA ASM IN MOTION SETUP 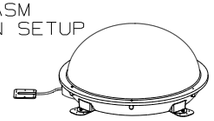

SATELLITE DISH INSTL

NO	PART NUMBER	DESCRIPTION
DA-2	SATELLITE DISH 163598-01-CHT PLATE-ROOF,CABLE ENTRY QUAD 146488-03-000 CABLE ASM-COAX 9" 163598-04-000 ADAPTOR-CABLE TO CABLE 82134-01-000 SCREW G67-10-12U (8) (FOR PLATE) SCREW G39-10-12U (12) (FOR SATELLITE DISH)	SATELLITE DISH ANTENNA ASM AUTOMATIC SETUP 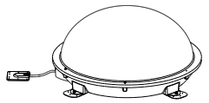
DI-2	SATELLITE DISH 154474-04-CHT PLATE-ROOF,CABLE ENTRY QUAD 146488-03-000 CABLE ASM-COAX 9" 163598-04-000 ADAPTOR-CABLE TO CABLE 82134-01-000 SCREW G67-10-12U (8) (FOR PLATE) SCREW G39-10-12U (12) (FOR SATELLITE DISH)	SATELLITE DISH ANTENNA ASM AUTOMATIC SETUP 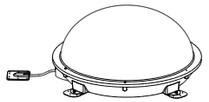
DM-2	SATELLITE DISH 137135-05-000 PLATE-ROOF,ENTRY (SUPPLIED WITH SATELLITE DISH) SCREW G67-10-12U (8) (FOR ROOF PLATE) SCREW G67-10-12U (10) (FOR SATELLITE DISH)	SATELLITE DISH ANTENNA ASM MANUAL SETUP 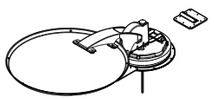

LEGEND

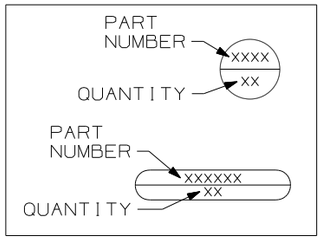

FIRST USED	96 MH'S
DO NOT SCALE DRAWING	
TITLE:	PART LISTING-ELECTRICAL
SHEET 5	PART NO 121339 REV

DWG NO 121339

RECEPTACLE PACKAGE-GFI

NO	PART NUMBER	DESCRIPTION
GFI US	RECEPTACLE 163319-01-CHT BOX 91910-02-000 WIRE-BONDING 133678-03-000 SCREW G13-07-12B (4) CONNECTOR 8313-01-000 TUBING-VINYL 8041-02-000 (300MM) 1	GFI RECEPTACLE WITH COVER AND BOX FOR US APPLICATION 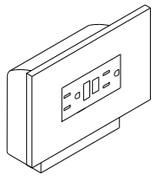
GFI CAN	RECEPTACLE 163319-01-CHT BOX 91910-01-000 WIRE-BONDING 133678-03-000 SCREW G13-07-12B (4) CONNECTOR 8313-01-000 TUBING-VINYL 8041-02-000 (300MM) 1	GFI RECEPTACLE WITH COVER AND BOX FOR CANADA APPLICATION 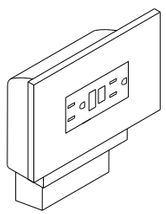

RECEPTACLE PACKAGE-GFI

NO	PART NUMBER	DESCRIPTION
GFI-1 US	RECEPTACLE 163319-01-CHT BOX 133070-01-000 WIRE-BONDING 133678-03-000 SCREW G13-07-12B (4) CONNECTOR 8313-01-000 TUBING-VINYL 8041-02-000 (300MM) 1	GFI RECEPTACLE WITH COVER AND BOX FOR US APPLICATION 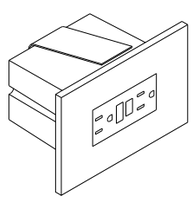
GFI-1 CAN	RECEPTACLE 163319-01-CHT BOX 133070-02-000 WIRE-BONDING 133678-03-000 SCREW G13-07-12B (4) CONNECTOR 8313-01-000 TUBING-VINYL 8041-02-000 (300MM) 1	GFI RECEPTACLE WITH COVER AND BOX FOR CANADA APPLICATION 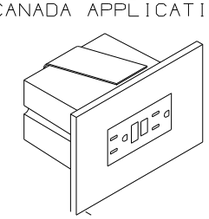

SPACERS

NO	PART NUMBER	DESCRIPTION
SP-01	SPACER 102568-01-XXX	STANDARD 110V RECEPTACLE SPACER (WOOD,VYL RAP,OG) 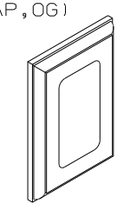
SP-02	SPACER 102568-02-XXX	WOOD SPACER FOR CEILING MOUNTED A/C PREP BOX (US) (WOOD,VYL RAP,OG) 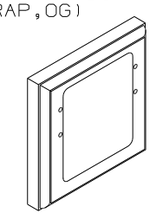
SP-03	SPACER 102568-03-XXX	WOOD SPACER FOR CEILING MOUNTED A/C PREP BOX (CANADA) (WOOD,VYL RAP,OG) 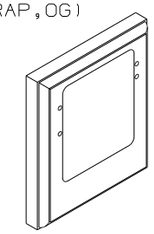
SP-04	SPACER 133713-01-CHT	STANDARD 110V RECEPTACLE SPACER (WOOD,VYL RAP,BEV) 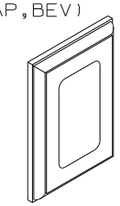
SP-05	SPACER 133713-20-XXX	STANDARD 110V RECEPTACLE SPACER (WOOD,BEV) 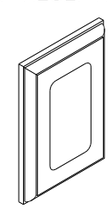
SP-21	SPACER 126052-01-XXX	WOOD SPACER FOR 1 - 110V RECEPTACLE AND 1 - REAR TV (12V) JACK (WOOD,BEV) 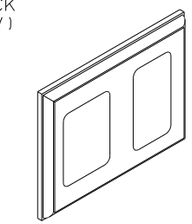

LEGEND

MISC.	SPACER
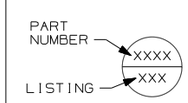	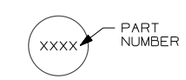

1 APPLY TUBING TO BARE GROUND WIRES.

NOTES:

FIRST USED	96 MH'S
DO NOT SCALE DRAWING	
TITLE:	PART LISTING-ELECTRICAL
SHEET 6	PART NO 121339 REV

DWG NO 121339

PREP-A/C,RECESSED (W/OUT FACTORY A/C)

NO	PART NUMBER	DESCRIPTION
PREP A/C-US	BOX 91910-02-000 COVER 84099-02-CHT LABEL 91243-01-000 SCREW G13-07-12B (4) CONNECTOR 8313-01-000 (3)	BOX AND EQUIPMENT USED FOR A/C PREP (W/OUT FACTORY A/C). US APPLICATION (RECESSED IN ROOF) 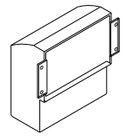
PREP A/C-CAN	BOX 91910-01-000 COVER 84099-02-CHT LABEL 91243-01-000 SCREW G13-07-12B (4) CONNECTOR 8313-01-000 (3)	BOX AND EQUIPMENT USED FOR A/C PREP (W/OUT FACTORY A/C). CANADA APPLICATION (RECESSED IN ROOF) 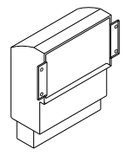

CONNECTION BOX-POWER CORD

NO	PART NUMBER	DESCRIPTION
J-PC 30 J-PC 30-US J-PC 30-CA	BOX 8289-01-000 COVER 8294-01-000 SCREW G67-10-10B (2) WIRE ASM-GROUND 133678-02-000 CONNECTOR 8314-01-000 (3) SCREW-GRND 103291-01-000 CONNECTOR 8356-02-000 CONNECTOR (PC) 8355-01-000	CONNECTION BOX IN POWER CORD COMPT FOR POWER CORD (US & CA APPLICATION) 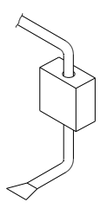

CONNECTION BOX-GENERATOR RECEPTACLE

NO	PART NUMBER	DESCRIPTION
J-RCP 30 J-RCP 30-US J-RCP 30-CA	BOX 8289-01-000 RECEPTACLE 24924-02-000 COVER 69238-01-000 SCREW G67-10-10B (2) WIRE ASM-GROUND 133678-02-000 133678-04-000 SCREW-GRND 103291-01-000 CONNECTOR 8314-01-000 TUBING-VINYL 8041-02-000 △1 (150MM)	CONNECTION BOX IN POWER CORD COMPT FOR THE GENERATOR RECEPTACLE (US & CA APPLICATION) 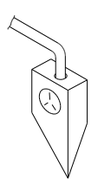

CONNECTION BOX, GENERATOR SERVICE FEED

NO	PART NUMBER	DESCRIPTION
J-GEN 30 J-GEN 30-US J-GEN 30-CA	BOX 8289-01-000 COVER 8294-01-000 SCREW G67-10-10B (2) WIRE ASM-GROUND 133678-02-000 WIRE NUT-GREY 8314-01-000 (3) SCREW-GRND 103291-01-000 CONNECTOR-WIRE 8356-01-000	BOX AND EQUIPMENT USED FOR CONNECTING THE GENERATOR LEADS TO THE SERVICE ENTRANCE WIRES (US & CA APPLICATION) 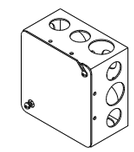

PREP-A/C,SURFACE (W/OUT FACTORY A/C)

NO	PART NUMBER	DESCRIPTION
PREP SURF	BOX 93603-01-000 COVER 53337-01-000 LABEL 91243-01-000 SCREW-GRND 103291-01-000 WIRE-BONDING 8019-01-000 SCREW G11-08-12B (2) TERMINAL 8328-01-000 CONNECTOR 8313-01-000 (2) CONNECTOR 8311-01-000	SURFACE MOUNT, US AND CANADA, BOX AND EQUIPMENT FOR A/C PREP (W/OUT FACTORY A/C). TYPICALLY LOCATED ON OVERHEAD CABINET INNER WALL OR ON CEILING. 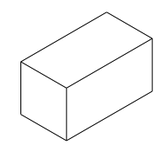

LEGEND

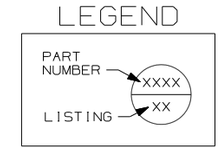

△1 APPLY TUBING TO BARE GROUND WIRES.

NOTES:

FIRST USED	96 MH'S
DO NOT SCALE DRAWING	
TITLE:	PART LISTING-ELECTRICAL
SHEET 7	PART NO 121339 REV

WIRE IDENTIFICATION CHART

CODE/COLOR	FROM:	TO:
A 14 YEL	GALLEY CEILING LAMP SWITCH	GALLEY CEILING LAMP
B 12 YEL	OVERCURRENT PROTECTION (30A BREAKER TYPICAL)	POWER PASSENGER SEAT ("BUDDY SEAT")
C 12 WHT	POWER PASSENGER SEAT	GROUND
D 14 YEL	SHOWER OVHD LAMP SWITCH SEE WIRE PF, START OF 97	SHOWER OVHD LAMP
E 095038-01-	PHONE INPUT JACK	REAR PHONE JACK
F 095038-01-	PHONE INPUT JACK	EXTERIOR PHONE JACK
G 12/ 10 YEL	OVERCURRENT PROTECTION (30A BREAKER TYPICAL)	HIGH SPEED HEATER FAN (USE 10 IF OVER 6' RUN)
H 095038-01-	PHONE INPUT JACK	FRONT PHONE JACK
J 6 BLK	OVERCURRENT PROTECTION (45 OR 55A BREAKER TYP)	COACH 12V PANEL/ CONVERTER BATTERY CHARGE
K 6 BLK	OVERCURRENT PROTECTION (45 OR 55A BREAKER TYP)	COACH 12V PANEL
L 6 GRN	CONVERTER 45 OR 55 AMP	GROUND
M 6 BLK	OVERCURRENT PROTECTION (45 OR 50A BREAKER)	CONVERTER BATTERY CHARGE
N 10 WHT	REFRIGERATOR	GROUND
P 10YEL(BLK)	OVERCURRENT PROTECTION (20A FUSE TYPICAL)	REFRIGERATOR (3 WAY)
R 8 GRN	REFRIGERATOR CHASSIS	GROUND
S 8 OR 6 GRN	GROUND BAR (LEFT SIDE)	CHASSIS GROUND
T 8 OR 6 GRN	GROUND BAR (RIGHT SIDE)	CHASSIS GROUND
U 6 GRN	CONVERTER CHASSIS	GROUND
W 8 GRN	- GROUND STUD	- GROUND STUD

CODE/COLOR	FROM:	TO:
X 14 YEL	- CHASSIS BRAKE LAMP CIRCUIT	- CENTER MOUNT BRAKE LAMP
Y 16 YEL	VOLUME CONTROL	RADIO/TV SPEAKER
Z 6 BLK	OVERCURRENT PROTECTION (45 OR 55A BREAKER TYP)	COACH 12V PANEL
AA 16 WHT	SERVICE ENGINE SOON LAMP	VEHICLE SERVICE ENGINE SOON LAMP CIRCUIT
AB 16 WHT	WATER TANK LEVEL SENSORS	GROUND
AC 16 WHT	MAIN HOLDING TANK SENSORS (BLACK WATER)	GROUND
AD 16 WHT	AUXILIARY HOLDING TANK #1 (GRAY WATER)	GROUND
AE 16 WHT	AUXILIARY HOLDING TANK #2 (GRAY WATER)	GROUND
AF 12 YEL	WATER PUMP SWITCH #1	MONITOR PANEL WATER PUMP SWITCH
AG 12 YEL	WATER PUMP SWITCH #1	MONITOR PANEL WATER PUMP SWITCH
AH 14 YEL	OVERCURRENT PROTECTION (10A FUSE TYPICAL)	BRAKE LAMP SWITCH WARNING LAMP (IGNITION RUN/START FED)
AJ 12 WHT	CHASSIS GROUND	BODY GROUND
AK 12 WHT	CHASSIS GROUND	BODY GROUND
AL 12 YEL	HEATER CONTROL (LOW SPEED)	BLOWER MOTOR (LOW SPEED)
AM 12YEL(WHT)	HEATER CONTROL (MEDIUM/LOW SPEED)	BLOWER MOTOR (MEDIUM/LOW SPEED)
AN 12 YEL	HEATER CONTROL (MEDIUM/HIGH SPEED)	BLOWER MOTOR (MEDIUM/HIGH SPEED)
AP 14 YEL	IGNITION SWITCH ACCESSORY FEED	OVERCURRENT PROTECTION (15A FUSE TYPICAL)
AR 14 WHT	HORN, FOG LAMPS	GROUND
AS 18 WHT	DASH RADIO	RIGHT FRONT SPEAKER (NEGATIVE)

WIRE IDENTIFICATION CHART

CODE/COLOR	FROM:	TO:
AT 18 WHT	DASH RADIO	LEFT FRONT SPEAKER (NEGATIVE)
AU 16 YEL	OVERCURRENT PROTECTION (15A BREAKER TYPICAL)	FRONT CARGO LAMP SWITCH (IGNITION ACCESSORY FED)
AW 16 YEL	FRONT CARGO LAMP SWITCH	REAR CARGO LAMP SWITCH
AX 16 YEL	FRONT CARGO LAMP SWITCH	REAR CARGO LAMP SWITCH
AY 16 YEL	REAR CARGO LAMP SWITCH	CARGO LAMPS
BA 14 WHT	WINDSHIELD WIPER MOTOR	GROUND
BB 16 YEL	OVERCURRENT PROTECTION (6A BREAKER TYPICAL)	INSTRUMENT PANEL GAUGES (IGNITION ACCESSORY FED)
BC 14 WHT	INDICATOR LAMPS	GROUND
BD 14 YEL	OVERCURRENT PROTECTION (10A FUSE TYPICAL)	BRAKE LAMP SWITCH
BE 12 WHT	BLOWER MOTOR	GROUND
BF 14 WHT	WASHER BOTTLE PUMP/HORN	GROUND
BG 14 YEL	FUEL SENDER	FUEL GAUGE
BH 14 YEL	RUN ONLY POWER RELAY	ENGINE WIRING
BJ 16 YEL	OVERCURRENT PROTECTION (10A FUSE TYPICAL)	ENGINE WIRING (IGNITION RUN/START FED)
BK 14 YEL	OVERCURRENT PROTECTION (10A FUSE TYPICAL)	HORN RELAY FEED
BL 16 WHT	CIGAR LIGHTER	GROUND
BM 16 YEL	CHASSIS BATTERY POWER	CIGAR LIGHTER
BN 16 YEL	ACCESSORY POWER	SPOTLAMP
BP 14 WHT	POWER MIRROR	GROUND
BR 14 YEL	POWER MIRROR (RIGHT SIDE)	POWER MIRROR CONTROL SWITCH
BS 14 YEL	POWER MIRROR HEAT SWITCH	POWER MIRRORS
BT 14 YEL	POWER MIRROR (LEFT SIDE)	POWER MIRROR CONTROL SWITCH
BU 14 YEL	RUN ONLY POWER	POWER MIRROR HEAT/ CONTROL SWITCHES
BW 12 YEL	IGNITION SWITCH	ACCESSORY CIRCUIT FEED
BX 12YEL(ORN)	IGNITION SWITCH RUN ONLY SOURCE	GENERAL(TURN, BACK UP,DASH IGNITION CIRCUIT,ETC)
BY 12YEL/8BLK	OVERCURRENT PROTECTION (16GA FUSELINK)(8GA PASSTHRU)	CHASSIS BATTERY SOURCE(AUTO AC BLOWER,POWER DRIVER SEAT,ETC)
CA 12 YEL	OVERCURRENT PROTECTION (16GA FUSELINK TYPICAL)	CHASSIS BATTERY SOURCE
CB 12 YEL	IGNITION SWITCH START SOURCE	START CIRCUIT SOURCE
CC 16 YEL	ALTERNATOR	ALTERNATOR WARNING LAMP
CD 16 YEL	OIL PRESSURE WARNING SENDER	OIL PRESSURE WARNING LAMP
CE 16 YEL	WATER TEMPERATURE WARNING SENDER	WATER TEMPERATURE WARNING LAMP
CF 14 YEL	REAR TV JACK	POWER FEED SWITCH
CG 14 YEL	CLUTCH/NEUTRAL SWITCH	START ISOLATION RELAY
CH 14 YEL	START RELAY	ENGINE WIRING
CJ 14 YEL	WINDSHIELD WIPER/WASHER CONTROL SWITCH	WINDSHIELD WASHER PUMP
CK 16 YEL	TELEVISION	SPEAKER (POSITIVE)
CL 16 WHT	TELEVISION	SPEAKER (NEGATIVE)
CM 10 YEL	OVERCURRENT PROTECTION (15A BREAKER TYPICAL)	INVERTER FEED

WIRE IDENTIFICATION CHART

CODE/COLOR	FROM:	TO:
CN 10 WHT	INVERTER	GROUND
CP 12 WHT	INVERTER CHASSIS	GROUND
CR 16 WHT	VEHICLE CHECK ENGINE LAMP CIRCUIT	CHECK ENGINE LAMP
CS 16 WHT	REMOTE THERMOSTAT (RC TERM/ORG EXPORT AIR)	GROUND
CT 16 YEL	DAYTIME RUNNING LAMP MODULE OUTPUT(PIN 30)	LOW BEAM HEADLAMP CIRCUIT
CU 16 YEL	DAYTIME RUNNING LAMP MODULE ENABLE(PIN 85)	RUN/START CIRCUIT
CW 14 YEL	DAYTIME RUNNING LAMP MODULE POWER(PIN 87A)	CHASSIS BATTERY POWER
CX 16 WHT	DAYTIME RUNNING LAMP MODULE GROUND(PIN 87)	GROUND
CY 16 YEL	DAYTIME RUNNING LAMP MODULE HIGH BEAM DISABLE(PIN 86)	HIGH BEAM HEADLAMP CIRCUIT
DA 12 YEL	SHOWER SUMP SYSTEM PUMP SWITCH	SHOWER SUMP SYSTEM PUMP
DB 12 WHT	SHOWER SUMP SYSTEM PUMP	GROUND
DC 16 YEL	REAR ROOF AIR CONDITIONER EXHAUST CIRCUIT	THERMOSTAT
DD 16 YEL	REAR ROOF AIR CONDITIONER COOL CIRCUIT	THERMOSTAT (Y TERM-EXPORT AIR/YEL)
DE 16 YEL	REAR ROOF AIR CONDITIONER HIGH SPEED FAN CIRCUIT	THERMOSTAT (H TERM-EXPORT AIR/BLU)
DF 16 YEL	REAR ROOF AIR CONDITIONER LOW SPEED FAN CIRCUIT	THERMOSTAT (G TERM-EXPORT AIR/RED)
DG 12YEL(GRY)	IGNITION SWITCH	ACCESSORY/RUN FEED
DH 14 YEL	EMERGENCY SHUTDOWN GAUGE	FUEL SOLENOID (DIESEL ENGINE)
DJ 16 YEL	TV/RADIO SPEAKER SWITCHING RELAY OUTPUT	LEFT REAR SPEAKER POSITIVE
DK 16 WHT	TV/RADIO SPEAKER SWITCHING RELAY OUTPUT	LEFT REAR SPEAKER NEGATIVE
DL 16 YEL	TV/RADIO SPEAKER SWITCHING RELAY OUTPUT	RIGHT REAR SPEAKER POSITIVE
DM 16 WHT	TV/RADIO SPEAKER SWITCHING RELAY OUTPUT	RIGHT REAR SPEAKER NEGATIVE
DN 10 YEL	BATTERY DISCONNECT RELAY	CIRCUIT BREAKER SLIDEOUT ROOM CIRCUIT BRKR
DP 14 YEL	TV/RADIO SPEAKER FEED SELECT SWITCH	TV/RADIO SPEAKER SWITCHING RELAY COIL INPUT OR AMPLIFIER
DR 16 YEL	HWH WIRING OR KWIKEE FRONT SLIDE MODULE	SLIDEOUT SWITCH (ROOM ONE EXTEND)
DS 16 WHT	CONTROL MODULE (FRONT SLIDE)(GROUND)	SLIDEOUT SWITCH (FRONT SLIDEOUT)
DT 16 YEL	SLIDEOUT ROOM RELAY (PIN 30)	SLIDEOUT ROOM CONTROL SWITCH
DU 16 YEL	HWH WIRING OR KWIKEE FRONT SLIDE MODULE	SLIDEOUT SWITCH (ROOM ONE RETRACT)
DW 16 WHT	SLIDEOUT ROOM SWITCH (G) (SWITCHED GROUND TO PUMP)	HWH WIRING (SWITCHED GROUND TO PUMP)
DX 16 WHT	HWH WIRING (G) (GROUND)	SLIDEOUT ROOM SWITCH (GROUND)
DY 16 WHT	HWH WIRING (G) (JACK SENSE; SWITCHED GROUND)	SLIDEOUT ROOM RELAY (JACK SENSE; SWITCHED GROUND)
EA 16 YEL	HWH WIRING (G) (ACCESSORY POWER)	SLIDEOUT ROOM RELAY (ACCESSORY POWER)
EB 16 YEL	SLIDEOUT ROOM RELAY (G) (SWITCHED ACCESSORY POWER)	FRT/RR SLIDEOUT ROOM SWITCH (SWITCHED EXTEND/RETRACT PWR)
EC 10 YEL	CHASSIS BATTERY POWER SOURCE (BATTERY MODE SOLENOID POST)	THRU FUSE TO AMP SOURCE SELECT RELAY(PIN 87)(OPTION 21V,95 Q)
ED 10 YEL	COACH BATTERY POWER SOURCE (BATTERY MODE SOLENOID POST)	THRU FUSE TO AMP SOURCE SELECT RELAY(PIN 87A)(OPTION 21V,95Q)
EE 16 YEL	AIR RIDE SUSPENSION LEFT DOWN SWITCH POSITION	AIR RIDE SUSPENSION LEFT HEIGHT CONTROL BOX
EF 16 YEL	AIR RIDE SUSPENSION LEFT UP SWITCH POSITION	AIR RIDE SUSPENSION LEFT HEIGHT CONTROL BOX
EG 16 WHT	AIR RIDE SUSPENSION WIRE ASM GROUND	AIR RIDE SUSPENSION CONTROL LAMP GROUNDS
EH 16 YEL	AIR RIDE SUSPENSION RIGHT DOWN SWITCH POSITION	AIR RIDE SUSPENSION RIGHT HEIGHT CONTROL BOX

WIRE IDENTIFICATION CHART

CODE/COLOR	FROM:	TO:
EJ 16 YEL	AIR RIDE SUSPENSION RIGHT UP SWITCH POSITION	AIR RIDE SUSPENSION RIGHT HEIGHT CONTROL BOX
EK 16 YEL	AIR RIDE SUSPENSION AUTO MODE SWITCH POSITION	AIR RIDE SUSPENSION HEIGHT CONTROL BOXES
EL 16 YEL	RUN ONLY POWER	AIR RIDE SUSPENSION AUTO/MANUAL MODE SWITCH
EM 16 YEL	AIR RIDE SUSPENSION COMPRESSOR	COMPRESSOR ON WARNING LAMP
EN 16 YEL	AIR RIDE SUSPENSION MANUAL MODE SWITCH POSITION	LEVEL CONTROL SWITCHES AND INDICATOR LAMP
EP 14 YEL	OVERCURRENT PROTECTION (15A BREAKER TYPICAL)	SPOTLAMP
ER 16 YEL	OVERCURRENT PROTECTION (6A BREAKER TYPICAL)	ELECTRIC STEP KILL SWITCH
ES 16 YEL	ELECTRIC STEP KILL SWITCH	ELECTRIC STEP
ET 16 YEL	OVERCURRENT PROTECTION (6A BREAKER TYPICAL)	REFRIGERATOR (2 WAY)
EU 16 WHT	REFRIGERATOR (2 WAY)	GROUND
EW 14 YEL	FUEL HEATER SWITCH	FUEL HEATER (DIESEL ENGINE)
EX 14 YEL	TELEVISION POWER SWITCH	TELEVISION WALL PLATE
EY 12YELLTBLU	OVERCURRENT PROTECTION (16GA FUSELINK TYPICAL)	IGNITION SWITCH FEED #2
FA 14 YEL	DRIVER'S DOOR PASSENGER SIDE POWER WINDOW SWITCH(DOWN,PIN2)	PASSENGER'S POWER WINDOW SWITCH(PIN 2)
FB 14 YEL	DRIVER'S DOOR PASSENGER SIDE POWER WINDOW SWITCH(UP,PIN 4)	PASSENGER'S POWER WINDOW SWITCH(PIN 4)
FC 14 YEL	PASSENGER'S DOOR POWER WINDOW SWITCH(DOWN,PIN 1)	PASSENGER'S DOOR POWER WINDOW MOTOR(DOWN)
FD 14 YEL	PASSENGER'S DOOR POWER WINDOW SWITCH(UP,PIN 5)	PASSENGER'S DOOR POWER WINDOW MOTOR(UP)
FG 10 YEL	AMPLIFIER POWER SOURCE SELECT RELAY (PIN 30)	AMPLIFIER POWER FEED (DELUXE SOUND SYSTEM,95 LUXOR)
FH 10 WHT	AMPLIFIER (DELUXE SOUND SYSTEM,95 LUXOR)	GROUND
FJ 12 YEL	WATER PUMP SWITCH #2 (THREE SWITCH SYSTEM)	WATER PUMP SWITCH #1 (THREE SWITCH SYSTEM)
FK 12 YEL	WATER PUMP SWITCH #2 (THREE SWITCH SYSTEM)	WATER PUMP SWITCH #1 (THREE SWITCH SYSTEM)
FL 14 YEL	SECOND PORCH LAMP SWITCH	SECOND PORCH LAMP
FM 14 WHT	SOLENOID MOUNTING BOLT	GROUND
FN 16 YEL	SOURCE SELECTOR SWITCH (DELUXE SOUND SYSTEM,95 LUXOR)	AMP & EQUALIZER REMOTE TRIGGER (DELUXE SOUND SYSTEM,95 LUXOR)
FP 16 YEL	EXHAUST BRAKE SWITCH (DIESEL PUSHER CHASSIS)	CHASSIS EXHAUST BRAKE HARNESS & BRAKE ON DASH INDICATOR LAMP
FR 14 YEL	FORD RUN/ACCESSORY IGNITON CIRCUIT(WHT/PUR,10A FUSED)	DOCKING LAMPS, RELAY TRIGGER, REAR MONITOR CAMERA FEED
FS 14 YEL	DOCKING LAMPS RELAY(PIN 87)	DOCKING LAMPS
FT 14 WHT	DOCKING LAMPS	GROUND
FU 14 YEL	AUTOMOTIVE AIR WIRING	FORD A/C COMPRESSOR CLUTCH SWITCH CIRCUIT
FW 14 YEL	DOCKING LAMPS SWITCH	DOCKING LAMPS RELAY(PIN 30)
FX 12 YEL	OVERCURRENT PROTECTION (30A BRKR OR FUSE)	POWER DRIVER SEAT (I.E.,6 WAY)
FY 12 WHT	POWER DRIVER SEAT (I.E.,6 WAY)	GROUND
GA 14 YEL	WATER SYSTEM WINTERIZATION SWITCH	WINTERIZATION VALVE
GB 14 YEL	WATER HEATER BYPASS SWITCH	WATER HEATER BYPASS VALVE
GC 16 YEL	SLIDEOUT ROOM SPDT SWITCH (M) (SWITCHED WIRE)	HWH WIRING (SWITCHED WIRE)
GD 16 YEL	WIPER CONTROL MODULE	WIPER MOTOR (S TERMINAL)
GE 16 YEL	SWITCHED DOME LAMP FEED	DOME LAMP
GF 16 WHT	COMMON REAR CHANNEL SPEAKER RETURN	REAR SPEAKERS

WIRE IDENTIFICATION CHART

CODE/COLOR	FROM:	TO:
GG 16 YEL	RADIO REMOTE TRIGGER (DELUXE SOUND OPTION)	SOURCE SELECTOR SWITCH (LUXOR)
GH 14 WHT	GLOW PLUG WAIT LAMP (DIESEL ENGINE)	ENGINE SENDER
GJ 16 YEL	COACH BATTERY POWER (UPSTREAM OF DISCONNECT)	LP DETECTOR AND/OR SOLAR PANEL WIRING OVERCURRENT PROTECTION
GK 14 YEL	AIR HORN SWITCH	CHASSIS HORN
GL 16 WHT	WATER/HOLDING TANKS LEVEL SENSORS	GROUND
GM 16 YEL	JET AIR RIDE SUSPENSION PRESSURE SENSORS	CHECK REAR AIR SUSPENSION DASH WARNING LAMP
GN 16 YEL	REAR TV SPEAKER OUTPUT (POSITIVE)	REAR TV SPEAKER (POSITIVE)
GP 16 WHT	REAR TV SPEAKER OUTPUT (NEGATIVE)	REAR TV SPEAKER (NEGATIVE)
GR 14 YEL	THERMOSTATICALLY CONTROLLED ROOF VENT (SEND)	THERMOSTAT (RETURN)
GS 14 YEL	THERMOSTATICALLY CONTROLLED ROOF VENT (RETURN)	THERMOSTAT (RETURN)
GT 16 YEL	RADIO POWER SWITCH (MEMORY FEED)	RADIO (MEMORY FEED)
GU 16 YEL	DEFOG MODULE OUTPUT	DEFOG RELAY, INDICATOR LAMP
GW 16 WHT	DEFOG SWITCH ON/OFF	DEFOG MODULE ON/OFF
GX 16/12 WHT	STEP COVER SWITCH (REF AAA-16/KA-12)	GROUND
GY 12 YEL	DEFOG RELAY	DEFOG UNIT
HA 14 YEL	READING LAMPS SWITCH (93 VANS)	READING LAMPS
HB 14 YEL	"MOOD" LAMPS SWITCH (93 VANS)	"MOOD" LAMPS
HC 14 YEL	12V POWER SOURCE (93 VANS)	OVERCURRENT PROTECTION (15A FUSE TYPICAL)
HD 14 YEL	SOFA SLIDE MOTOR POSITIVE (94 VANS)	SOFA MONOPLEX CONTROLLER
HE 14 WHT	SOFA SLIDE MOTOR NEGATIVE (94 VANS)	SOFA MONOPLEX CONTROLLER
HF 14 YEL	SOFA RECLINE MOTOR POSITIVE (94 VANS)	SOFA MONOPLEX CONTROLLER
HG 14 WHT	SOFA RECLINE MOTOR NEGATIVE (94 VANS)	SOFA MONOPLEX CONTROLLER
HH 16 YEL	SOFA MONOPLEX SWITCH (94 VANS)	SOFA MONOPLEX CONTROLLER
HJ 16 WHT	SOFA MONOPLEX SWITCH (94 VANS)	GROUND
HK 14 WHT	SOFA MONOPLEX CONTROLLER (94 VANS)	GROUND
HL 14 YEL	FLOOD LAMP SWITCH (94 VANS)	FLOOD LAMP
HM 16 YEL	REAR TV SPEAKER OUTPUT (POSITIVE)	REAR TV SPEAKER (POSITIVE)
HN 16 WHT	REAR TV SPEAKER OUTPUT (NEGATIVE)	REAR TV SPEAKER (NEGATIVE)
HP 16 YEL	OVERCURRENT PROTECTION (94 VANS)	REAR AC
HR 14 YEL	SWITCH (94 1200 MODEL VAN)	12VOLT RECEPTACLE
HS 16 YEL	SOLAR PANEL (1HS INDICATOR TO BATTERY)	COACH BATTERY THRU OVERCURRENT PROTECTION
HT 16 WHT	SOLAR PANEL (1HT INDICATOR TO GROUND)	GROUND
HU 16 YEL	GENERATOR SWITCH (LED)	GENERATOR (POSITIVE SIGNAL)
HW 16 YEL	LICENSE PLATE LAMP FEED	LICENSE PLATE LAMP
HX 16 YEL	CHASSIS CLEARANCE LAMP CRT #2	CLEARANCE/MARKER LAMPS
HY 12 WHT	DEFOG UNIT	GROUND
JA 14 YEL	OVERCURRENT PROTECTION (15A FUSE/BREAKER TYPICAL)	WATER PUMP,MONITOR PANEL,ETC ("CLEAN CIRCUIT",REF JP)
JB 14 YEL	OVERCURRENT PROTECTION (15A FUSE/BREAKER TYPICAL)	FURNACE, ROOF VENT,ETC (REF JM)

WIRE IDENTIFICATION CHART

CODE/COLOR	FROM:	TO:
JC 14 YEL	OVERCURRENT PROTECTION (15A FUSE/BREAKER TYPICAL)	COACH LIGHTING, ETC CIRCUIT #1 (REF NC)
JD 14 YEL	OVERCURRENT PROTECTION (15A FUSE/BREAKER TYPICAL)	COACH LIGHTING, ETC CIRCUIT #2 (REF ND)
JE 14 YEL	OVERCURRENT PROTECTION (15A FUSE/BREAKER TYPICAL)	COACH LIGHTING, ETC CIRCUIT #3 (REF NE)
JF 14 YEL	OVERCURRENT PROTECTION (15A FUSE/BREAKER TYPICAL)	COACH LIGHTING, ETC CIRCUIT #4 (REF NF)
JG 14 YEL	OVERCURRENT PROTECTION (15A FUSE/BREAKER TYPICAL)	COACH LIGHTING, ETC(ALT CLEAN) CIRCUIT #5 (REF JN)
JH 14 YEL	MAIN FURNACE (12V POWER)	MAIN FURNACE THERMOSTAT
JJ 14 YEL	MAIN FURNACE (HEAT)	MAIN FURNACE THERMOSTAT
JK 14 YEL	AUXILIARY FURNACE	AUXILIARY FURNACE THERMOSTAT
JL 14 YEL	AUXILIARY FURNACE	AUXILIARY FURNACE THERMOSTAT
JM 14 WHT	MAIN FURNACE	GROUND
JN 14 WHT	COACH LIGHTING CIRCUIT #5 (REF JG)	GROUND(ALTERNATE CLEAN CIRCUIT FOR LINEAR CONVERTER)
JP 14 WHT	"CLEAN CIRCUIT" DEVICES (REF JA)	GROUND
JR 16 YEL	MONITOR PANEL	LP TANK #2 LEVEL SENSOR
JS 12 YEL	MONITOR PANEL WATER PUMP SWITCH	WATER PUMP
JT 16 YEL	MONITOR PANEL	LP TANK #1 LEVEL SENSOR
JU 14 YEL	MONITOR PANEL WATER HEATER SWITCH	WATER HEATER (BLU)
JW 14 YEL	MONITOR PANEL WATER HEATER SWITCH	WATER HEATER (BRN)
JX 14 WHT	WATER HEATER	GROUND
JY 12 WHT	WATER PUMP	GROUND

CODE/COLOR	FROM:	TO:
KA 12 YEL	OVERCURRENT PROTECTION (25A BREAKER TYPICAL)	ELECTRIC STEP BATTERY POWER
KB 10 YEL	OVERCURRENT PROTECTION (25A BREAKER TYPICAL)	ELECTRIC STEP KILL SWITCH (OLD STEP WIRING STYLE)
KC 10 YEL	ELECTRIC STEP KILL SWITCH (OLD STEP WIRING STYLE)	ELECTRIC STEP
KD 18 WHT	ELECTRIC STEP DOOR JAMB SWITCH	ELECTRIC STEP
KE 14 YEL	RUN ONLY POWER SOURCE	GENERAL PURPOSE(RELAY TRIGGER, REAR AUTO HTR,DRL,MONITOR,ETC)
KF 16 WHT	COACH BATTERY DISCONNECT RELAY SWITCH	GROUND
KG 14 YEL	POWER LIFT VENT (BLU)	POWER LIFT SWITCH(UP)
KH 14 YEL	POWER LIFT VENT (RED)	POWER LIFT SWITCH(DOWN)
KJ 14 YEL	POWER LIFT VENT (BLK)	FAN SWITCH
KK 18 YEL	REAR STEREO	RIGHT SPEAKER (POSITIVE)
KL 18 WHT	REAR STEREO	RIGHT SPEAKER (NEGATIVE)
KM 14 YEL	POWER LIFT VENT LAMP	LAMP SWITCH
KN 18 YEL	REAR STEREO	LEFT SPEAKER (POSITIVE)
KP 18 WHT	REAR STEREO	LEFT SPEAKER (NEGATIVE)
KR 14 WHT	REAR STEREO ANTENNA	GROUND
KS 14 YEL	REAR AUTO HEATER SWITCH (HIGH SPEED)	REAR AUTO HEATER
KT 14 YEL	REAR AUTO HEATER SWITCH (MEDIUM SPEED)	REAR AUTO HEATER
KU 14 YEL	REAR AUTO HEATER SWITCH (LOW SPEED)	REAR AUTO HEATER
KW 18 YEL	DASH RADIO	RIGHT FRONT SPEAKER (POSITIVE)

WIRE IDENTIFICATION CHART

CODE/COLOR	FROM:	TO:
KX 18 YEL	DASH RADIO	RIGHT REAR SPEAKER (POSITIVE)
KY 18 YEL	DASH RADIO	LEFT FRONT SPEAKER (POSITIVE)
LA 18 YEL	DASH RADIO	LEFT REAR SPEAKER (POSITIVE)
LB 18 WHT	DASH RADIO	RIGHT REAR SPEAKER (NEGATIVE)
LC 18 WHT	DASH RADIO	LEFT REAR SPEAKER (NEGATIVE)
LD 14 YEL	IGNITION SWITCH ACCESSORY POWER SOURCE	GENERAL PURPOSE(AUX FANS,RELAY TRIGGER,ETC.)
LE 14 YEL	AUXILIARY DEFROST FANS SWITCH (HIGH SPEED)	AUXILIARY DEFROST FANS (BLK)
LF 14 YEL	AUXILIARY DEFROST FANS SWITCH (LOW SPEED)	AUXILIARY DEFROST FANS (RED)
LG 16 YEL	COACH BATTERY DISCONNECT RELAY (TERMINAL I)	COACH BATTERY DISCONNECT RELAY SWITCH
LH 16 YEL	COACH BATTERY DISCONNECT RELAY (TERMINAL S)	COACH BATTERY DISCONNECT RELAY SWITCH
LJ 16 YEL	COACH BATTERY DISCONNECT RELAY BATTERY SIDE FUSE FEED	COACH BATTERY DISCONNECT RELAY SWITCH
LK 16 YEL	COACH BATTERY DISCONNECT RELAY LOAD SIDE FUSE FEED	COACH BATTERY DISCONNECT RELAY SWITCH/INDICATOR LAMP
LL 16 WHT	GENERATOR SWITCH (START)	GENERATOR (RED)
LM 16 WHT	GENERATOR SWITCH (STOP)	GENERATOR (ORN)
LN 16 WHT	GENERATOR SWITCH/INDICATOR (GROUND)	GENERATOR (GRN)
LP 16 YEL	GENERATOR SWITCH/INDICATOR (RUN)	GENERATOR (BLU)
LR 14 YEL	BATTERY MODE SWITCH (AUX START SWITCH)	BATTERY MODE SOLENOID (AUX START SOLENOID)
LS 12 YEL	OVERCURRENT PROTECTION 20A BREAKER TYPICAL,COACH FEED	GENERAL PURPOSE(BATTERY MODE, RADIO POWER,BATTERY CONDITION)
LT 16 YEL	BATTERY CONDITION SWITCH	VOLTMETER (POWER FEED)
LU 14 YEL	CHASSIS BRAKE LAMP CIRCUIT	VEHICLE BRAKES, TAG AXLE CONTROL MODULE,ETC.
LW 14 YEL	WIPER CONTROL MODULE (PARK)	WINDSHIELD WIPER MOTOR (FRONT)
LX 14 YEL	WIPER CONTROL MODULE (LOW SPEED)	WINDSHIELD WIPER MOTOR (FRONT)
LY 14 YEL	WIPER CONTROL MODULE (HIGH SPEED)	WINDSHIELD WIPER MOTOR (FRONT)
MA 14 YEL	WIPER CONTROL MODULE (WASHER BOTTLE PUMP)	WINDSHIELD WASHER BOTTLE PUMP (FRONT)
MB 14 YEL	CHASSIS WINDSHIELD WIPER FEED CIRCUIT	OVERCURRENT PROTECTION (6A BREAKER TYPICAL)
MC 16 WHT	INSTRUMENT PANEL LAMPS	GROUND
MD 14 YEL	OVERCURRENT PROTECTION (15A BREAKER TYPICAL)	REMOTE MIRROR RELAY/POWER WINDOW FEED
ME 14 YEL	OVERCURRENT PROTECTION (15A BREAKER TYPICAL)	AIR HORN RELAY FEED/ MARKER LAMPS RELAY FEED
MF 14 YEL	OVERCURRENT PROTECTION (15A BREAKER TYPICAL)	FOG LAMP RELAY FEED/ SPOT LAMP FEED
MG 14 WHT	GENERAL PURPOSE(RELAYS,DASH DEVICES,ETC.)	GROUND
MH 16 WHT	CHASSIS CHOKE LAMP INDICATOR CIRCUIT	CHOKE LAMP
MJ 14 YEL	CHASSIS WINDSHIELD WIPER FEED CIRCUIT	WIPER CONTROL MODULE (POWER FEED)
MK 14 YEL	CHASSIS BATTERY POWER FEED CIRCUIT	GENERAL PURPOSE(CIGAR LIGHTER, DOME/COURTESY LAMPS,ETC)
ML 16 YEL	CHASSIS INSTRUMENT PANEL LAMPS FEED CIRCUIT	INSTRUMENT PANEL LAMPS
MM 14 YEL	CHASSIS CLEARANCE LAMP CRT #1 (BRN TYPICAL)	CLEARANCE/MARKER LAMPS
MN 14 WHT	DOME LAMP SWITCHED GROUND	DOME LAMP SWITCH(DOOR JAMB, INSTRUMENT PANEL SWITCH,ETC)
MP 18/16 WHT	ELEC STEP DOOR JAMB SWITCH, LP TANK SENDER, ETC	GROUND
MR 14 YEL	REAR WINDOW WIPER SWITCH (LOW SPEED)	REAR WINDOW WIPER MOTOR (LOW SPEED)

WIRE IDENTIFICATION CHART

CODE/COLOR	FROM:	TO:
MS 14 WHT	CLEARANCE/MARKER LAMPS	GROUND
MT 8 WHT	ELECTRIC STEP	GROUND
MU 14 WHT	GENERAL PURPOSE(CIGAR LIGHTER, DOME LAMPS,12 V OUTLETS,ETC)	GROUND
MW 16 YEL	VEHICLE CHECK ENGINE LAMP CIRCUIT	CHECK ENGINE LAMP
MX 16 YEL	WINDSHIELD WIPER SWITCH	WIPER RELAY
MY 14 YEL	VEHICLE HEADLAMP FEED CIRCUIT	DIMMER MODULE
NA 14 YEL	VEHICLE HEADLAMP LOW BEAM CIRCUIT	DIMMER MODULE
NB 14 YEL	VEHICLE HEADLAMP HIGH BEAM CIRCUIT	DIMMER MODULE
NC 14 WHT	COACH LIGHTING CIRCUIT #1 (REF JC)	GROUND
ND 14 WHT	COACH LIGHTING CIRCUIT #2 (REF JD)	GROUND
NE 14 WHT	COACH LIGHTING CIRCUIT #3 (REF JE)	GROUND
NF 14 WHT	COACH LIGHTING CIRCUIT #4 (REF JF)	GROUND
NG 16 YEL	FOG LAMPS SWITCH	FOG LAMPS RELAY
NH 14 YEL	FOG LAMPS RELAY	FOG LAMPS
NJ 16 YEL	CHASSIS HORN FEED CIRCUIT	AIR HORN SWITCH
NK 14 YEL	AIR HORN SWITCH	AIR HORN AIR TANK AIR RELEASE VALVE
NL 14 YEL	AR HORN RELAY	AIR HORN AIR COMPRESSOR
NM 14 YEL	OVERCURRENT PROTECTION (15A FUSE TYPICAL)	COACH LIGHTING CIRCUIT #6 (REF PM)
NN 16 YEL	LEFT POWER MIRROR MOTOR (HORIZONTAL CONTROL,YEL)	POWER MIRROR CONTROL SWITCH
NR 16 YEL	LEFT POWER MIRROR (VERTICAL CONTROL, WHT)	POWER MIRROR CONTROL SWITCH
NS 14 YEL	POWER MIRROR HEATER SWITCH	POWER MIRRORS (RED)
NT 14 YEL	POWER MIRROR RELAY	POWER MIRROR CONTROL SWITCH
NU 14 YEL	AISLE LAMPS SWITCH #1	AISLE LAMPS SWITCH #2
NW 14 YEL	FRONT COMPARTMENT LAMPS SWITCH	COMPARTMENT LAMPS
NX 14 YEL	INTERSTATE COMMERCE COMMITTEE COURTESY BLINK SWITCH	CLEARANCE LAMPS
NY 14 YEL	AISLE LAMPS SWITCH #1	AISLE LAMPS SWITCH #2
PA 14 WHT	REAR AUTO HEATER	GROUND
PB 14 WHT	REAR WINDOW WIPER MOTOR	GROUND
PC 14 YEL	BEDROOM CEILING LAMP SWITCH	BEDROOM CEILING LAMP
PD 14 YEL	MAKE UP LAMP #1 SWITCH	MAKE UP LAMP #1
PE 14 YEL	BATH CEILING LAMP SWITCH	BATH CEILING LAMP
PF 14 YEL	SHOWER LAMP SWITCH WIRE D WAS FIRST USED ON C'S	SHOWER LAMP
PG 14 YEL	WARDROBE LAMP SWITCH	WARDROBE LAMP
PH 14 YEL	AISLE LAMPS SWITCH	AISLE LAMPS
PJ 14 YEL	PORCH LAMP SWITCH	PORCH LAMP
PK 14 YEL	STRIP LAMP SWITCH	STRIP LAMP
PL 14 YEL	FRONT CEILING LAMP SWITCH	FRONT CEILING LAMP
PM 14 WHT	COACH LIGHTING CIRCUIT #6 (REF NM)	GROUND

WIRE IDENTIFICATION CHART

CODE/COLOR	FROM:	TO:
PN 16 WHT	RIGHT POWER MIRROR (COMMON,BLK)	POWER MIRROR CONTROL SWITCH
PP 16 YEL	RIGHT POWER MIRROR (HORIZONTAL CONTROL,YEL)	POWER MIRROR CONTROL SWITCH
PR 16 YEL	RIGHT POWER MIRROR (VERTICAL CONTROL,WHT)	POWER MIRROR CONTROL SWITCH
PS 14 YEL	MAP LAMP SWITCH	MAP LAMP
PT 14 YEL	BEVERAGE TRAY LAMP SWITCH	BEVERAGE TRAY LAMP
PU 14 YEL	DUMP LAMP SWITCH	DUMP LAMP
PW 14 YEL	OVERCURRENT PROTECTION (15A BREAKER TYPICAL)	POWER DOOR LOCK/UNLOCK RELAY (PIN 30)
PX 16 YEL	POWER DOOR LOCK SWITCH (LOCK) (PIN 1)	POWER DOOR LOCK RELAY (PIN 86)
PY 16 YEL	POWER DOOR LOCK SWITCH (UNLOCK) (PIN 5)	POWER DOOR UNLOCK RELAY (PIN 86)
RA 14 YEL	VEHICLE LEFT FRONT TURN SIGNAL CIRCUIT	LEFT FRONT TURN SIGNAL/MARKER LAMP
RB 14 YEL	VEHICLE RIGHT FRONT TURN SIGNAL CIRCUIT	RIGHT FRONT TURN SIGNAL/MARKER LAMP
RC 14 WHT	FRONT AUTOMOTIVE LAMPS(TURN, MARKER,ETC)	GROUND
RD 14 YEL	OVERCURRENT PROTECTION (15 A FUSE TYPICAL)	HAZARD FLASHER, HORN RELAY
RE 12 YEL	RADIATOR FAN RELAY#1 (COMMON)	RADIATOR FAN #1
RF 12 YEL	RADIATOR FAN RELAY #2 (COMMON)	RADIATOR FAN #2
RG 14 WHT	RADIATOR FAN THERMOSTAT SWITCH	RADIATOR FAN RELAYS (COILS,TRIGGER)
RH 12YEL(BLK)	OVERCURRENT PROTECTION (25A BREAKER TYPICAL)	RADIATOR FAN RELAY #1 (NORMALLY OPEN)
RJ 12YEL(BLK)	OVERCURRENT PROTECTION (25A BREAKER TYPICAL)	RADIATOR FAN RELAY #2 (NORMALLY OPEN)
RK 12 WHT	RADIATOR FAN #1	GROUND
RL 12 WHT	RADIATOR FAN #2	GROUND
RM 14 WHT	VEHICLE IGNITION SWITCH GROUND DURING START CIRCUIT	BULB CHECK(LOW TAG AIR,PARK BRAKE,ETC)
RN 14 YEL	AUTOMOTIVE AIR CONDITIONER THERMOSTAT CUTOFF SWITCH	AUTOMOTIVE AIR CONDITIONER COMPRESSOR CLUTCH
RP 14 YEL	AUTOMOTIVE AIR CONDITIONER COOLANT FAN CONTROL	COOLANT FAN RELAY
RR 14 YEL	BRAKE LAMP SWITCH	TURN SIGNAL SWITCH
RS 14 YEL	HEADLAMP SWITCH INSTRUMENT PANEL LAMP FEED SWITCH	OVERCURRENT PROTECTION (5A FUSE TYPICAL)
RT 14 YEL	HORN RELAY (COMMON)	HORN
RU 14 YEL	HORN RELAY (COIL)	HORN SWITCH
RW 14 YEL	HAZARD FLASHER	TURN SIGNAL SWITCH
RX 14 YEL	EUL WARNING LAMP	EUL MODULE
RY 14 WHT	INSTRUMENT CLUSTER/ EUL MODULE	GROUND
SA 14 YEL	ENGINE WATER TEMPERATURE SENDER	ENGINE WATER TEMPERATURE GAUGE
SB 14 YEL	ENGINE OIL PRESSURE SENDER	ENGINE OIL PRESSURE GAUGE
SC 14 YEL	VEHICLE RIGHT REAR TURN SIGNAL/BRAKE LAMP CIRCUIT	RIGHT REAR TURN SIGNAL/ BRAKE LAMPS
SD 14 YEL	VEHICLE LEFT REAR TURN SIGNAL/BRAKE LAMP CIRCUIT	LEFT REAR TURN SIGNAL/ BRAKE LAMPS
SE 16YEL(WHT)	SPEED SENSOR (TWISTED PAIR)	SPEEDOMETER AND SPEED CONTROL MODULE
SF 16WHT(BLK)	SPEED SENSOR (TWISTED PAIR)	SPEEDOMETER AND SPEED CONTROL MODULE
SG 14 YEL	IGNITION SWITCH START FEED	GENERAL(NEUTRAL SAFETY SWITCH, FUEL PUMP RELAY COIL,ETC)
SH 14 YEL	IGNITION SWITCH RUN/START FEED	GENERAL(IGNITION COIL RELAY NORMALLY OPEN CONTACT,ETC)

WIRE IDENTIFICATION CHART

CODE/COLOR	FROM:	TO:
SJ 12YEL(BLK)	OVERCURRENT PROTECTION (16GA FUSELINK TYPICAL)	CHASSIS BATTERY FEED
SK 12YEL(WHT)	OVERCURRENT PROTECTION (16GA FUSELINK TYPICAL)	CHASSIS BATTERY HEADLAMP SWITCH FEED #1
SL 12YEL(BLU)	OVERCURRENT PROTECTION (16GA FUSELINK TYPICAL)	CHASSIS BATTERY IGNITION SWITCH FEED #1
SM 12YEL(BLK)	OVERCURRENT PROTECTION (16GA FUSELINK TYPICAL)	RADIATOR FAN #1 CIRCUIT BREAKER FEED
SN 12YEL(BLK)	OVERCURRENT PROTECTION (16GA FUSELINK TYPICAL)	RADIATOR FAN #2 CIRCUIT BREAKER FEED
SP 14 YEL	HEADLAMP SWITCH MARKER CIRCUIT FEED	OVERCURRENT PROTECTION (15A FUSE TYPICAL)
SR 12YEL(BRN)	IGNITION SWITCH RUN ONLY FEED	OVERCURRENT PROTECTION (15A FUSE TYPICAL)
SS 12YEL(WHT)	IGNITION SWITCH ACCESSORY FEED	OVERCURRENT PROTECTION (15A FUSE TYPICAL)
ST 14 YEL	OVERCURRENT PROTECTION (15A FUSE TYPICAL)	TURNS/BACK UP CIRCUIT FEED
SU	STARTER SOLENOID BATTERY TERMINAL	ALTERNATOR BATTERY TERMINAL
SW 14 YEL	TURN SIGNAL FLASHER	TURN SIGNAL SWITCH
SX 14 YEL	REAR WINDOW WASHER SWITCH	REAR WINDOW WASHER BOTTLE PUMP
SY 14 YEL	IGNITION COIL	TACHOMETER
TA 14 YEL	OVERCURRENT PROTECTION (15A FUSE TYPICAL)	IGNITION RUN ONLY GENERAL FEED (RADIATOR FAN RELAY COIL,ETC)
TB 12 YEL	OVERCURRENT PROTECTION (25A FUSE TYPICAL)	IGNITION RUN ONLY GENERAL FEED (AUTO AC BLOWER(NOT HIGH),ETC)
TC 14 YEL	OVERCURRENT PROTECTION (15A FUSE TYPICAL)	IGNITION RUN ONLY GENERAL FEED (DOOR LOCKS,REAR WIPER,ETC.)
TD 14 YEL	OVERCURRENT PROTECTION (15A FUSE TYPICAL)	CHASSIS BATTERY GENERAL FEED
TE 16 WHT	GENERATOR	GENERATOR LOW OIL INDICATOR LAMP
TF 16 YEL	GENERATOR	GENERATOR LOW OIL INDICATOR LAMP
TG 16 YEL	TELEVISION	SPEAKER RIGHT (POSITIVE)
TH 16 WHT	TELEVISION	SPEAKER RIGHT (NEGATIVE)
TJ 16 YEL	TELEVISION	SPEAKER LEFT (POSITIVE)
TK 16 WHT	TELEVISION	SPEAKER LEFT (NEGATIVE)
TL 16 YEL	FRONT RIGHT TV SPEAKER NEGATIVE,SERIES CONNECTION	FRONT LEFT TV SPEAKER POSITIVE,SERIES CONNECTION
TM 16 WHT	STEP COVER SWITCH	STEP COVER SOLENOID MOVES STEP OUT
TN 14 YEL	STARTER SOLENOID BATTERY TERMINAL	ALTERNATOR REGULATOR
TP 14 WHT	REAR AUTOMOTIVE LAMPS(TURN, MARKER,ETC)	GROUND
TR 14 YEL	VEHICLE BACK UP CIRCUIT FEED	BACK UP LAMPS
TS 14 YEL	STARTER SOLENOID (I TERMINAL)	ENGINE WIRING (IGNITION MODULE)
TT 14 YEL	NEUTRAL SAFETY SWITCH	STARTER SOLENOID (S TERMINAL)
TU 14 WHT	IGNITION COIL RELAY (COIL)	GROUND
TW 14 YEL	IGNITION SWITCH START/RUN FEED	IGNITION COIL
TX 14 YEL	IGNITION COIL RELAY (COMMON)	IGNITION COIL
TY 14 YEL	ALTERNATOR (T TERMINAL)	CHOKE HEATER
UA 14 YEL	FUEL PUMP FUSE	OIL PRESSURE CUTOUT SWITCH/ FUEL PUMP RELAY(NO),ETC
UB 14 YEL	INERTIA SWITCH (FUEL PUMP SHUTOFF)	FUEL PUMP RELAY (NORMALLY CLOSED)
UC 14 YEL	FUEL PUMP RELAY (COMMON)	FUEL PUMP
UD 16 WHT	FUEL GAUGE	FUEL SENDER

WIRE IDENTIFICATION CHART

CODE/COLOR	FROM:	TO:
UE 14 YEL	INERTIA SWITCH (FUEL PUMP SHUTOFF)	OIL PRESSURE CUTOFF SWITCH
UF 14 WHT	FUEL PUMP	GROUND
UG 14 WHT	FUEL PUMP RELAY (COIL)	GROUND
UH 16 YEL	LP DETECTOR (SHUTOFF SYSTEM,YEL)	LP SAFETY VALVE
UJ 16 YEL	LP DETECTOR (SHUTOFF SYSTEM,YEL)	LP SAFETY SWITCH
UK 16 WHT	LP DETECTOR (BLK)(REF WB)	GROUND
UL 16 WHT	EUL LAMP	EUL MODULE
UM 16 WHT	DOOR JAMB DOME LAMP SWITCH	GROUND
UN 16 WHT	SEAT BELT LAMP	EUL MODULE
UP 16 YEL	SEAT BELT LAMP	SEAT BELT BUZZER
UR 16 WHT	PARK BRAKE SWITCH	PARK BRAKE LAMP
US 16 YEL	OVERCURRENT PROTECTION (6A BREAKER TYPICAL)	COACH BATTERY FEED TO BATTERY CONDITION SWITCH
UT 14 YEL	DOOR JAMB DOME LAMP SWITCH (SWITCH POSITIVE)	DOME LAMP
UU 16 YEL	WATER HEATER	VACUUM VALVE SOLENOID
UW 16 WHT	VACUUM VALVE SOLENOID	GROUND
UX 16 YEL	LP DETECTOR #2 (SHUTOFF SYSTEM,YEL)	LP SAFETY VALVE
UY 16 YEL	LP DETECTOR #2 (SHUTOFF SYSTEM,YEL)	LP SAFETY VALVE
WA 14 YEL	EXTERIOR SERVICE LAMP SWITCH	EXTERIOR SERVICE LAMP
WB 16 YEL	OVERCURRENT PROTECTION (6A BREAKER TYPICAL)	LP DETECTOR (REF UK)
WC 14 YEL	DDVRCURRENT PROTECTION (15A BREAKER TYPICAL)	COMPARTMENT LAMPS (REF WE)
WD 14 WHT	AISLE LAMPS	GROUND
WE 14 WHT	COMPARTMENT LAMPS (REF WC)	GROUND
WF 12YEL(WHT)	OVERCURRENT PROTECTION (30A BREAKER TYPICAL)	PARK BRAKE COMPRESSOR SOENOID
WG 12YEL(BLK)	OVERCURRENT PROTECTION (30A BREAKER TYPICAL)	IGNITION RELAY
WH 14 YEL	OVERCURRENT PROTECTION (15A BREAKER TYPICAL)	IGNITION SWITCH RUN ONLY FEED
WJ 12 YEL	OVERCURRENT PROTECTION (20A BREAKER TYPICAL)	IGNITION SWITCH ACCESSORY FEED RELAY
WK 14 YEL	OVERCURRENT PROTECTION (15A BREAKER TYPICAL)	IGNITION SWITCH ACCESSORY FEED
WL 14 YEL	POWER DOOR LOCK RELAY (PIN 30)	POWER DOOR LOCK MOTOR(S) (LOCK)
WM 14 WHT	POWER DOOR UNLOCK RELAY (PIN 30)	POWER DOOR LOCK MOTOR(S) (UNLOCK)
WN 16 YEL	RADIO POWER SWITCH (ACCESSORY POWER)	DASH RADIO (ACCESSORY POWER)
WP 10 YEL	OVERCURRENT PROTECTION (25A BREAKER TYPICAL)	FRONT PANEL LOADS(INVERTER, RADIO)(96 M-SERIES)
WR 14 YEL	OVERCURRENT PROTENTION (15A BREAKER TYPICAL)	POWER SEAT LIFT SWITCH
WS 14 WHT	POWER SEAT LIFT SWITCH	GROUND
WT 14 YEL	POWER SEAT LIFT SWITCH (UP)	MOTOR (POSITIVE UP)
WU 14 WHT	POWER SEAT LIFT SWITCH (DOWN)	MOTOR (POSITIVE DOWN)
WW 14 WHT	SPOT LAMP SWITCH	GROUND
WX 14 YEL	HALLWAY CEILING LAMP SWITCH	HALLWAY CEILING LAMP
WY 10 WHT	AUTOMOTIVE AIR CONDITIONER MOTOR	GROUND

WIRE IDENTIFICATION CHART

CODE/COLOR	FROM:	TO:
XA 12/10 YEL	VEHICLE AUTOMOTIVE AIR FEED CIRCUIT	AUTOMOTIVE AIR CONDITIONER BLOWER (USE 10 IF OVER 6')
XB 14 YEL	DRIVER'S DOOR POWER WINDOW SWITCH(PIN 5)	DRIVER'S DOOR POWER WINDOW MOTOR(POSITIVE UP)
XC 14 WHT	DRIVER'S DOOR POWER WINDOW SWITCH(PIN 1)	DRIVER'S DOOR POWER WINDOW MOTOR(POSITIVE DOWN)
XD 16 WHT	MONITOR PANEL	HOLDING TANK LEVEL SENSOR (FULL)
XE 16 WHT	MONITOR PANEL	HOLDING TANK LEVEL SENSOR (3/4)
XF 16 WHT	MONITOR PANEL	HOLDING TANK LEVEL SENSOR (1/2)
XG 16 WHT	MONITOR PANEL	HOLDING TANK LEVEL SENSOR (1/4)
XH 16 YEL	MONITOR PANEL	WATER TANK LEVEL SENSOR
XJ 16 YEL	MONITOR PANEL	BLACK HOLDING LEVEL SENSOR (MAIN TANK)
XK 16 YEL	MONITOR PANEL	GRAY AUXILIARY HOLDING TANK #1 LEVEL SENSOR (AUX TANK #1)
XL 16 YEL	MONITOR PANEL	GRAY AUXILIARY HOLDING TANK #2 LEVEL SENSOR (AUX TANK #2)
XM 14 YEL	OVERCURRENT PROTECTION (18GA FUSELINK TYPICAL)	IGNITION START RELAY
XN 16 YEL	FRONT ROOF AIR CONDITIONER (EXHAUST)	THERMOSTAT (EX TERMINAL)
XP 16 YEL	FRONT ROOF AIR CONDITIONER (COOL)	THERMOSTAT (Y TERMINAL)(Y EXPORT AIR)
XR 16 YEL	FRONT ROOF AIR CONDITIONER (HIGH SPEED BLOWER)	THERMOSTAT (GH TERMINAL)(H EXPORT AIR)
XS 16 YEL	FRONT ROOF AIR CONDITIONER (LOW SPEED BLOWER)	THERMOSTAT (GL TERMINAL)(G EXPORT AIR)
XT 14 YEL	IGNITION START RELAY #1 (NORMALLY CLOSED CONTACT)	IGNITION START RELAY #2 (COMMON CONTACT)
XU 14 YEL	DINETTE OVHD LAMP SWITCH	DINETTE OVHD LAMP
XW 14 WHT	IGNITION SWITCH ACCESSORY FEED RELAY CIRCUIT	GROUND

CODE/COLOR	FROM:	TO:
XX 14 YEL	GALLEY LAMP SWITCH	GALLEY LAMP
XY 14 YEL	MAKE UP LAMP #2 SWITCH	MAKE UP LAMP #2
YA 14 YEL	TAG AXLE PRESSURE CONTROL SWITCH	COMPRESSOR SOLENOID/ SOLENOID AIR VALVE
YB 14 WHT	LOW AIR PRESSURE SWITCH	GROUND
YC 10YEL(BLU)	OVERCURRENT PROTECTION (30A BREAKER TYPICAL)	TAG AXLE COMPRESSOR SOLENOID
YD 14 WHT	TAG AXLE MOUNTING PLATE SCREW	GROUND
YE 10 WHT	TAG AXLE COMPRESSOR	GROUND
YF 12 WHT	TAG AXLE BRAKE CONTROL MODULE/BRAKE MAGNET	GROUND
YG 12YEL(BLK)	OVERCURRENT PROTECTION (20A BREAKER TYPICAL)	TAG AXLE BRAKE CONTROL MODULE
YH 12YEL(BLU)	TAG AXLE BRAKE CONTROL MODULE	TAG AXLE BRAKE MAGNET
YJ 10YEL(WHT)	TAG AXLE COMPRESSOR SOLENOID	TAG AXLE COMPRESSOR
YK 14 YEL	BEDROOM CEILING LAMP SWITCH#1 (2 SWITCH SYSTEM)	BEDROOM CEILING LAMP SWITCH #2 (2 SWITCH SYSTEM)
YL 14 YEL	BEDROOM CEILING LAMP SWITCH #1 (2 SWITCH SYSTEM)	BEDROOM CEILING LAMP SWITCH #2 (2 SWITCH SYSTEM)
YM 14 YEL	HALLWAY CEILING LAMP SWITCH #1 (2 SWITCH SYSTEM)	HALLWAY CEILING LAMP SWITCH #2 (2 SWITCH SYSTEM)
YN 14 YEL	HALLWAY CEILING LAMP SWITCH #1 (2 SWITCH SYSTEM)	HALLWAY CEILING LAMP SWITCH #2 (2 SWITCH SYSTEM)
YP 14 YEL	VALANCE LAMP SWITCH #1 (3 WAY SWITCH)	VALANCE LAMP SWITCH #2 (3 WAY SWITCH)
YR 14 YEL	VALANCE LAMP SWITCH #1 (3 WAY SWITCH)	VALANCE LAMP SWITCH #2 (3 WAY SWITCH)
YS 14 YEL	VALANCE LAMP SWITCH	VALANCE LAMP
YT 14 YEL	FRONT VALANCE LAMP SWITCH	FRONT VALANCE LAMP

WIRE IDENTIFICATION CHART

CODE/COLOR	FROM:	TO:
YU 14 YEL	REAR VALANCE LAMP SWITCH	REAR VALANCE LAMP
YW 14 WHT	DOOR BELL SWITCH	DOOR BELL
YX 14 YEL	IGNITION SWITCH RUN/START FEED	ALTERNATOR WARNING LAMP
YY 14 YEL	ALTERNATOR VOLTAGE REGULATOR	ALTERNATOR WARNING LAMP
AAA 16 WHT	STEP COVER SWITCH (REF GX)	STEP COVER SOLENOID MOVES STEP IN
AAB 14 YEL	DINETTE READING LAMPS	DINETTE READING LAMP SWITCH
AAC 14 YEL	LOUNGE READING LAMPS	LOUNGE READING LAMP SWITCH
AAD 14 YEL	FORD CHASSIS TRAILER MARKER LAMP CIRCUIT (BR/WHT)	TRAILER CONNECTOR SOCKET MARKER LAMPS
AAE 14 YEL	FORD CHASSIS TRAILER BACKUP LAMP CIRCUIT (BLK/LT GRN)	TRAILER CONNECTOR SOCKET BACKUP LAMPS
AAF 14 YEL	FORD CHASSIS TRAILER LEFT TURN/BRAKE LAMP CIRCUIT (YEL)	TRAILER CONNECTOR SOCKET LEFT TURN/BRAKE LAMP
AAG 14 YEL	FORD CHASSIS TRAILER RIGHT TURN/BRAKE LAMP CIRCUIT (DKG)	TRAILER CONNECTOR SOCKET RIGHT TURN/BRAKE LAMP
AAH 14 YEL	BATH-VENT,POWER	BATH-VENT, THERMOSTAT
AAJ 14 YEL	BATH-VENT,POWER	BATH-VENT, THERMOSTAT
AAK 16 WHT	SWITCH-WATER PUMP (MULTIPLEX SYSTEM)	LATCHING RELAY (WITH 4 OR MORE SWITCHES)
AAL 16 WHT	SWITCH-WATER PUMP (MULTIPLEX SYSTEM)	GROUND
AAM 14 YEL	CHASSIS SUPPLIED WIRE ASM (DARK BLUE)(GM)	RIGHT TAIL LAMP PARK (WIE)
AAN 14 YEL	CHASSIS SUPPLIED WIRE ASM (PURPLE) (GM)	LEFT TAIL LAMP PARK (WIE)
AAP 10 YEL	55 AMP BREAKER JUMPER WIRE	30 AMP BREAKER
AAR 14 YEL	TV/RADIO SPEAKER FEED SELECTOR SWITCH	TV SPEAKER AMPLIFIER

CODE/COLOR	FROM:	TO:
AAS 16 YEL	SPEAKER (NEGATIVE) SPEAKERS IN SERIES	SPEAKER (POSITIVE)
AAT 16 YEL	AMPLIFIER POSITIVE OUT (AAU NEGATIVE)	FRONT WOOFER (WITH DELUXE SOUND SYSTEM)
AAU 16 WHT	AMPLIFIER NEGATIVE OUT (AAT POSITIVE)	FRONT WOOFER (WITH DELUXE SOUND SYSTEM)
AAW 16 YEL	AMPLIFIER POSITIVE OUT (AAX NEGATIVE)	REAR WOOFER (WITH DELUXE SOUND SYSTEM)
AAX 16 WHT	AMPLIFIER NEGATIVE OUT (AAW POSITIVE)	REAR WOOFER (WITH DELUXE SOUND SYSTEM)
AAY 12 YEL	SLIDEOUT ROOM CONTROL SWITCH (RAM #1)	SLIDEOUT DRIVE MOTOR LEAD #1
AAZ 12 YEL	SLIDEOUT ROOM CONTROL SWITCH (RAM #1)	SLIDEOUT DRIVE MOTOR LEAD #2
BBA 16 WHT	SLIDEOUT WIRING (PARK BRAKE SW)(SWITCHED GRD)	SLIDEOUT ROOM RELAY (GROUND TERMINAL)
BBB 16 YEL	SLIDEOUT ROOM CIRCUIT BREAKER (6 AMP)	SLIDEOUT ROOM RELAY (PIN 86 & 87)
BBC 16 YEL	LOAD SHEDDER MONITOR PANEL (RED WIRE)	LOAD SHEDDER CONTROL BOARD (RED WIRE)
BBD 16 YEL	LOAD SHEDDER MONITOR PANEL (BLUE WIRE)	LOAD SHEDDER CONTROL BOARD (BLUE WIRE)
BBE 16 YEL	LOAD SHEDDER MONITOR PANEL (BLACK WIRE)	LOAD SHEDDER CONTROL BOARD (BLACK WIRE)
BBF 16 YEL	LOAD SHEDDER MONITOR PANEL (GRAY WIRE)	LOAD SHEDDER CONTROL BOARD (GRAY WIRE)
BBG 14 YEL	DINETTE CEILING LAMP SWITCH	DINETTE CEILING LAMP
BBH 16 YEL	REAR COMPRESSOR SIGNAL REAR THERMOSTAT	LOAD SHEDDER CONTROL BOARD
BBJ 16 YEL	LOAD SHEDDER CONTROL BOARD	REAR A/C (COOL)
BBK 12 WHT	JET AIR/TAG AXLE WIRING	GROUND, CHASSIS
BBL 14 YEL	OVHD SWITCH	OVHD HALOGEN LAMPS
BBM 16 YEL	SLIDEOUT ROOM SWITCH (ROOM TWO EXTEND)	HWH WIRING (ROOM TWO EXTEND)

WIRE IDENTIFICATION CHART

CODE/COLOR	FROM:	TO:
BBN 16 YEL	SLIDEOUT ROOM SWITCH (ROOM TWO RETRACT)	HWH WIRING (ROOM TWO RETRACT)
BBP 14 YEL	ICC COURTESY BLINK SWITCH	ICC COURTESY BLINK RELAY
BBR 14 YEL	ICC COURTESY BLINK RELAY	CLEARANCE LAMPS
BBS 14 YEL	CHASSIS FUSE PANEL	ICC COURTESY BLINK RELAY
BBT 14 YEL	DOCKING LAMP SWITCH TRIGGER RELAY	DOCKING LAMP SWITCH
BBU 12 YEL	DOCKING LAMP CIRCUIT BREAKER	DOCKING LAMP RELAY
BBW 14 YEL	VEHICLE LEFT HEADLAMP LOW BEAM CIRCUIT	LEFT LOW BEAM LAMP
BBX 14 YEL	VEHICLE RIGHT HEADLAMP LOW BEAM CIRCUIT	RIGHT LOW BEAM LAMP
BBY 14 YEL	SWITCH-MONITOR PANEL (IN EXT. WATER CENTER)	EXTERIOR MONITOR PANEL (IN EXT. WATER CENTER)
BBZ 14 YEL	OVERCURRENT PROTECTION (15A FUSE/BREAKER TYPICAL)	AUXILIARY FURNACE (CCA)
CCA 14 WHT	AUXILIARY FURNACE	GROUND
CCB 16 YEL	EXTERIOR MONITOR PANEL	WATER TANK LEVEL SENSOR
CCC 16 YEL	EXTERIOR MONITOR PANEL	MAIN HOLDING TANK LEVEL SENSOR
CCD 16 YEL	EXTERIOR MONITOR PANEL	AUX HOLDING TANK LEVEL SENSOR
CCE 14 YEL	COMPARTMENT LAMP SWITCH	COMPARTMENT LAMP
CCF 14 YEL	COMPARTMENT LAMP SWITCH	COMPARTMENT LAMP
CCG 14 YEL	COMPARTMENT LAMP SWITCH	COMPARTMENT LAMP
CCH 14 YEL	COMPARTMENT LAMP SWITCH	COMPARTMENT LAMP
CCJ 14 YEL	COMPARTMENT LAMP SWITCH	COMPARTMENT LAMP
CCK 14 YEL	COMPARTMENT LAMP SWITCH	COMPARTMENT LAMP
CCL 14 YEL	COMPARTMENT LAMP SWITCH	COMPARTMENT LAMP
CCM 14 YEL	COMPARTMENT LAMP SWITCH	COMPARTMENT LAMP
CCN 16 YEL	THERMOSTATE LOW SPEED FAN SIGNAL	CENTRAL AIR AND LOAD SHEDDER
CCP 16 YEL	LOAD SHEDDER COMPRESSOR TWO CONTROL RELAY	CENTRAL A/C COMPRESSOR TWO
CCR 14 YEL	SWITCH-MONITOR PANEL (IN EXT. WATER CENTER)	EXTERIOR MONITOR PANEL (IN EXT. WATER CENTER)
CCS 16 YEL	NOISE FILTER	RADIO POWER INPUT
CCT 16 YEL	REAR RIGHT TV SPEAKER NEGATIVE,SERIES CONNECTION	REAR LEFT TV SPEAKER POSITIVE,SERIES CONNECTION
CCU 16 YEL	GM DOME LAMP POWER	DOME LAMP
CCW 12 YEL	DUAL MODE SOLENOID (CHASSIS SIDE)	FUSE HOLDER (30 AMP)
CCX 16 YEL	ORG WIRE ON AIR COMPRESSOR	AIR PRESSURE SWITCH ON AIR TANK
CCY 16 YEL	HWH WIRING (BATTERY POWER)	SLIDEOUT ROOM SWITCH (POSITIVE)
CCZ 16 YEL	HWH WIRING (SWITCHED BATTERY POWER)	SLIDEOUT ROOM #1 SWITCH (POSITIVE)
DDA 16 YEL	HWH WIRING (PUMP RELAY CONTROL)	SLIDEOUT ROOM SWITCH (POSITIVE)
DDB 14 YEL	REAR AUTO HEATER CIRCUIT BREAKER	REAR AUTO HEATER RELAY (POWER)
DDC 14 YEL	REAR AUTO HEATER RELAY (SWITCHED POWER)	REAR AUTO HEATER SWITCH (COMMON TERMINAL)
DDD 14 YEL	MODULE-CHARGE CONTROL RELAY OUTPUT	AUX-START SOLENOID RELAY
DDE 14 YEL	AUX-START SOLENOID RELAY	AUX-START SOLENOID
DDF 10 YEL	HEATER BLOWER CIRCUIT BREAKER	HEATER BLOWER RELAY

WIRE IDENTIFICATION CHART

CODE/COLOR	FROM:	TO:
DDG 10 YEL	CIRCUIT BREAKER BUSS BAR	CHASSIS BATTERY FEED CIRCUIT BREAKER
DDH 14 YEL	FREIGHTLINER RUN ONLY TRIGGER CIRCUIT	HEATER BLOWER RELAY
DDJ 16 WHT	CHASSIS PARKING BRAKE TRIGGER CIRCUIT	LEVELING SYSTEM PARKING BRAKE SENSOR WIRE
DDK 16 YEL	HWH WIRING (PUMP RELAY CONTROL)	REAR SLIDEOUT ROOM SWITCH (POSITIVE)
DDL 14 WHT	FRONT LEFT AUTOMOTIVE LAMPS	GROUND
DDM 14 WHT	FRONT RIGHT AUTOMOTIVE LAMPS	GROUND
DDN 16 YEL	TIMER MODULE	CHECK ANTENNA LIGHT
DDP 12 YEL	OVERCURRENT PROTECTION (20A BREAKER TYPICAL)	INVERTER FEED (INVERTER NUMBER 2)
DDR 12 WHT	INVERTER (INVERTER NUMBER 2)	GROUND
DDS 12 WHT	INVERTER CHASSIS (INVERTER NUMBER 2)	GROUND
DDT 12 YEL	POWER COMPT DOOR LOCK RELAY (RIGHT SIDE)	POWER COMPT DOOR LOCK MOTOR(S) (RIGHT SIDE)
DDU 12 WHT	POWER COMPT DOOR UNLOCK RELAY (RIGHT SIDE)	POWER COMPT LOCK MOTOR(S) (UNLOCK) (RIGHT SIDE)
DDV 12 YEL	POWER COMPT DOOR LOCK RELAY (LEFT SIDE)	POWER COMPT LOCK MOTOR(S) (LOCK) (LEFT SIDE)
DDW 12 WHT	POWER COMPT DOOR UNLOCK RELAY (LEFT SIDE)	POWER COMPT LOCK MOTOR(S) (UNLOCK) (LEFT SIDE)
DDX 12 YEL	OVERCURRENT PROTECTION (20A BREAKER TYPICAL)	POWER COMPT DOOR LOCK/ UNLOCK RELAY (RIGHT SIDE)
DDY 12 YEL	OVERCURRENT PROTECTION (20A BREAKER TYPICAL)	POWER COMPT DOOR LOCK/ UNLOCK RELAY (LEFT SIDE)
DDZ 12 YEL	POWER COMPT DOOR LOCK SWITCH (LOCK) (PIN 1)	POWER COMPT DOOR LOCK RELAY (PIN 86)
EEA 12 WHT	POWER COMPT DOOR LOCK SWITCH (UNLOCK) (PIN 5)	POWER COMPT DOOR UNLOCK RELAY (PIN 86)
EEB 12 WHT	POWER COMPT DOOR LOCK RELAYS (LEFT SIDE)	GROUND
EEC 12 YEL	25 AMP BREAKER IN 12 VOLT PANEL	SOFA RECLINER SWITCH SOFA 4-WAY RECLINER
EED 12 WHT	SOFA RECLINER SWITCH SOFA 4-WAY RECLINER	GROUND
EEE 14 YEL	OVERCURRENT PROTECTION (15A BREAKER TYPICAL)	12V POWER JACK
EEF 14 WHT	12V POWER JACK	GROUND
EEG 12 WHT	POWER COMPT DOOR LOCK RELAYS (RIGHT SIDE)	GROUND
EEH 12 YEL	SOFA RECLINER SWITCH EXTEND	SOFA RECLINER MOTOR SOFA 4-WAY
EEJ 12 YEL	SOFA RECLINER SWITCH RETRACT	SOFA RECLINER MOTOR SOFA 4-WAY
EEK 18 YEL	AUDIO AMPLIFIER	LH FRT SPKR (+)
EEL 18 WHT	AUDIO AMPLIFIER	LH FRT SPKR (-)
EEM 18 YEL	AUDIO AMPLIFIER	RH FRT SPKR (+)
EEN 18 WHT	AUDIO AMPLIFIER	RH FRT SPKR (-)
EEP 18 YEL	AUDIO AMPLIFIER	LH RR SPKR (+)
EER 18 WHT	AUDIO AMPLIFIER	LH RR SPKR (-)
EES 18 YEL	AUDIO AMPLIFIER	RH RR SPKR (+)
EET 18 WHT	AUDIO AMPLIFIER	RH RR SPKR (-)
EEU 18 YEL	AUDIO AMPLIFIER	CTR CHANNEL SPKR (+)
EEW 18 WHT	AUDIO AMPLIFIER	CTR CHANNEL SPKR (-)
EEX 12/10 YEL	PASSENGER AUTO A/C FEED CIRCUIT	PASSENGER AUTO A/C BLOWER (USE 10 IF OVER 6')
EEY 10 WHT	PASSENGER AUTO A/C MOTOR	GROUND

WIRE IDENTIFICATION CHART

CODE/COLOR	FROM:	TO:
EEZ 12/10 YEL	OVERCURRENT PROTECTION (30A BREAKER TYPICAL)	PASSENGER HI-SPEED HEATER FAN (USER 10 IF OVER 6')
FFA 10 YEL	PASSENGER HEATER BLOWER CIRCUIT BREAKER	PASSENGER HEATER BLOWER RELAY
FFB 10 YEL	OVERCURRENT PORTECTION (30A BREAKER TYPICAL)	POWER LOUNGE CHAIR
FFC 10 WHT	POWER LOUNGE CHAIR	GROUND
FFD 12 YEL	OVERCURRENT PROTECTION (30A BREAKER TYPICAL)	AWNING CONTROL BOX (12V POSITIVE)
FFE 12 WHT	AWNING CONTROL BOX	GROUND
FFF 12 YEL	AWNING CONTROL BOX	DOOR AWNING (MOTOR POSITIVE)
FFG 12 WHT	DOOR AWNING (MOTOR GROUND)	AWNING CONTROL BOX
FFH 12 YEL	AWNING CONTROL BOX	PATIO AWNING (MOTOR POSITIVE)
FFJ 12 WHT	PATIO AWNING (MOTOR GROUND)	AWNING CONTROL BOX
FFK 16 YEL	AWNING CONTROL BOX	DOOR AWNING SWITCH (EXTEND)
FFL 16 YEL	DOOR AWNING SWITCH (COMMON)	AWNING CONTROL BOX
FFM 16 YEL	AWNING CONTROL BOX	DOOR AWNING SWITCH (RETRACT)
FFN 16 YEL	AWNING CONTROL BOX	PATIO AWNING SWITCH (EXTEND)
FFP 16 YEL	PATIO AWNING SWITCH (COMMON)	AWNING CONTOL BOX
FFR 16 YEL	AWNING CONTOL BOX	PATIO AWNING SWITCH (RETRACT)
FFS 14 WHT	RELAY (PIN 30)	AWNING CONTROL BOX
FFT 14 WHT	PATIO AWNING SWITCH	AWNING CONTROL BOX
FFU 16 YEL	AWNING SELECTOR SWITCH (DOOR AWNING)	AWNING CONTROL SWITCH (DOOR AWNING)
FFV 16 YEL	AWNING SELECTOR SWITCH (PATIO AWNING)	AWNING CONTROL SWITCH (PATIO AWNING)
FFW 14 YEL	LOUNGE LAMPS SWITCH #1	LOUNGE LAMPS SWITCH #2
FFX 14 YEL	LOUNGE LAMPS SWITCH #1	LOUNGE LAMPS SWITCH #2
FFY 14 YEL	CEILING FAN SWITCH	CEILING FAN
FFZ 14 YEL	OVERCURRENT PROTECTION (15A FUSE/BREAKER TYPICAL)	COACH LIGHTING,ETC CIRCUIT #7 (REF GGA)
GGA 14 WHT	COACH LIGHTING (REF-FFZ)	GROUND
GGB 14 YEL	POWER LIFT VENT	POWER LIFT SWITCH (UP)
GGC 14 YEL	POWER LIFT VENT	POWER LIFT SWITCH (DOWN)
GGD 16 YEL	CONTROL MODULE (LEFT FRONT SLIDE)(STOP)	SLIDEOUT SWITCH (LEFT FRONT SLIDE)
GGE 16 YEL	CONTROL MODULE (LEFT FRONT SLIDE)(GREEN LED)	SLIDEOUT SWITCH (LEFT FRONT SLIDE)
GGF 16 YEL	CONTROL MODULE (LEFT FRONT SLIDE)(RED LED)	SLIDEOUT SWITCH (LEFT FRONT SLIDE)
GGG 16 YEL	CONTROL MODULE (LEFT FRONT SLIDE)(SIGNAL)	LEFT FRONT SLIDE,FRONT RAM (ENCODER)
GGH 16 YEL	CONTROL MODULE (LEFT FRONT SLIDE)(+)	LEFT FRONT SLIDE,FRONT RAM (ENCODER)
GGJ 16 WHT	CONTROL MODULE (LEFT FRONT SLIDE)(-)	LEFT FRONT SLIDE,FRONT RAM (ENCODER)
GGK 16 YEL	CONTROL MODULE (LEFT FRONT SLIDE)(SIGNAL)	LEFT FRONT SLIDE,REAR RAM (ENCODER)
GGL 16 YEL	CONTROL MODULE (LEFT FRONT SLIDE)(+)	LEFT FRONT SLIDE,REAR RAM (ENCODER)
GGM 16 WHT	CONTROL MODULE (LEFT FRONT SLIDE)(-)	LEFT FRONT SLIDE,REAR RAM (ENCODER)
GGN 12 YEL	CONTROL MODULE (RAM #2)	SLIDEOUT ACTUATOR DRIVE LEAD #1
GGP 12 YEL	CONTROL MODULE (RAM #2)	SLIDEOUT ACTUATOR DRIVE LEAD #2

WIRE IDENTIFICATION CHART

CODE/COLOR	FROM:	TO:
GGR 16 YEL	FRONT ROOF HEAT PUMP	THERMOSTAT (W TERMINAL)
GGS 16 YEL	REAR ROOF HEAT PUMP	THERMOSTAT (W TERMINAL)
GGT 12 YEL	SOFA RECLINER SWITCH EXTEND	SOFA RECLINER MOTOR SOFA 4-WAY
GGU 12 YEL	SOFA RECLINER SWITCH RETRACT	SOFA RECLINER MOTOR SOFA 4-WAY
GGV 14 WHT	GPS (BLACK WIRE)	GROUND
GGW 16 YEL	GPS (GREEN/WHITE WIRE)	VEHICLE SPEED SENSOR (CHASSIS SUPPLIED)
GGX 14 YEL	10 OHM RESISTOR *	BEDROOM CEILING FAN (LOW SPEED)
GGY 14 YEL	BATHROOM VENT SWITCH	BATHROOM VENT
GGZ 14 YEL	BEDROOM VENT SWITCH	BEDROOM VENT
HHA 14 YEL	OVERCURRENT PROTECTION (15A FUSE/BREAKER TYPICAL)	COACH VENTS/LAMPS (REF HHB)
HHB 14 WHT	COACH VENTS/LAMPS (REF HHA)	GROUND
HHC 12 YEL	STEP COVER SWITCH	STEP COVER MOTOR (+)RETRACT,(-)EXTEND
HHD 12 YEL	STEP COVER SWITCH	STEP COVER MOTOR (-)EXTEND,(+)RETRACT
HHE 16 YEL	SLIDEOUT ROOM SWITCH (ROOM THREE EXTEND)	HWH WIRING (ROOM THREE EXTEND)
HHF 16 YEL	SLIDEOUT ROOM SWITCH (ROOM THREE RETRACT)	HWH WIRING (ROOM THREE RETRACT)
HHG 16 YEL	SLIDEOUT ROOM SWITCH (ROOM FOUR EXTEND)	HWH WIRING (ROOM FOUR EXTEND)
HHH 16 YEL	SLIDEOUT ROOM SWITCH (ROOM FOUR RETRACT)	SLIDEOUT ROOM SWITCH (ROOM FOUR RETRACT)
HHJ 14 YEL	110V WATER HEATER TRIGGER SWITCH	WATER HEATER RELAY
HHK 14 YEL	DRIVER'S POWER SUNVISOR SWITCH	DRIVER'S POWER SUNVISOR
HHL 14 YEL	DRIVER'S POWER SUNVISOR SWITCH	DRIVER'S POWER SUNVISOR
HHM 14 YEL	PASS POWER SUNVISOR SWITCH	PASS POWER SUNVISOR
HHN 14 YEL	PASS POWER SUNVISOR SWITCH	PASS POWER SUNVISOR
HHP 14 YEL	HOT WATER HEAT CONTROL BOARD (F1)	ZONE 1 FAN SPEED SWITCH
HHR 14 YEL	ZONE 1 FAN SPEED SWITCH	ZONE 1 HEATER FAN
HHS 16 YEL	HOT WATER HEAT CONTROL BOARD (TC)	ZONE 2 & 3 THERMOSTAT
HHT 16 YEL	HOT WATER HEAT CONTROL BOARD (T2)	ZONE 2 THERMOSTAT
HHU 14 YEL	HOT WATER HEAT CONTROL BOARD (F2)	ZONE 2 FAN SPEED SWITCH
HHV 14 YEL	ZONE 2 FAN SPEED SWITCH	ZONE 2 HEATER FAN
HHW 16 YEL	HOT WATER HEAT CONTROL BOARD (T3)	ZONE 3 THERMOSTAT
HHX 14 YEL	HOT WATER HEAT CONTROL BOARD (F3)	ZONE 3 HEATER FAN
HHY 16 WHT	AWNING CONTROL BOX	WIND SENSOR (NEGATIVE)
HHZ 16 YEL	AWNING CONTROL BOX	WIND SENSOR (POSITIVE)
JJA 16 YEL	AWNING CONTROL BOX	WIND SENSOR TEMPERATURE OUTPUT
JJB 16 YEL	AWNING CONTROL BOX	WIND SENSOR SPEED OUTPUT
JJC 14 YEL	ENGINE HEATER CIRCULATING PUMP SWITCH	HOT WATER HEAT CONTROL PANEL (BLU/BLK WIRE)
JJD 10 YEL	OVERCURRENT PROTECTION (25 FUSE TYPICAL)	HOT WATER HEAT CONTROL BOARD
JJE 10 WHT	HOT WATER HEAT CONTROL BOARD	GROUND
JJF 14 YEL	SATELLITE POWER SWITCH	SATELLITE-AUTO SEEK

WIRE IDENTIFICATION CHART

CODE/COLOR	FROM:	TO:
JJG 12 YEL	OVERCURRENT PROTECTION (20 AMP BREAKER TYPICAL)	SLIDEOUT ROOM CONTROL SWITCH (RAM #3)
JJH 12 WHT	SLIDEOUT ROOM CONTROL SWITCH (RAM #3)	GROUND
JJJ 12 YEL	SLIDEOUT ROOM CONTROL SWITCH (RAM #3)	SLIDEOUT DRIVE MOTOR LEAD #1
JJK 12 YEL	SLIDEOUT ROOM CONTROL SWITCH (RAM #3)	SLIDEOUT DRIVE MOTOR LEAD #2
JJL 12 YEL	OVERCURRENT PROTECTION (20 AMP BREAKER TYPICAL)	SLIDEOUT ROOM CONTROL SWITCH (RAM #2)
JJM 16 YEL	HWH WIRING (SWITCHED BATTERY POWER)	SLIDEOUT ROOM SWITCH #2 (SWITCHED EXTEND/RETRACT PWR)
JJN 16 YEL	HWH WIRING (SWITCHED BATTERY POWER)	SLIDEOUT ROOM SWITCH #3 (SWITCHED EXTEND/RETRACT PWR)
JJP 16 YEL	HWH WIRING (SWITCHED BATTERY POWER)	SLIDEOUT ROOM SWITCH #4 (SWITCHED EXTEND/RETRACT PWR)
JJR 16 YEL	REMOTE SWITCH (EXTEND)	PATIO AWNING CONTROL MODULE (RELAY POSITION 87A,EXTEND)
JJS 12 YEL	REMOTE SWITCH	DOOR AWNING CONTROL RELAY (RELAY POSITION 87A,EXTEND)
JJT 14 YEL	OVERCURRENT PROTECTION (15A FUSE/BREAKER TYPICAL)	COACH 12V RECEPTACLES (REF JJU)
JJU 14 WHT	COACH 12V RECEPTACLES (REF JJT)	GROUND
JJV 14 YEL	MONITOR PANEL LAMP SWITCH	MONITOR PANEL LAMP
JJW 14 YEL	RUN ONLY POWER BREAKER	RUN ONLY POWER RELAY
JJX 14 YEL	RUN ONLY POWER RELAY	GENERAL PURPOSE (RUN ONLY FEED)
JJY 14 YEL	RUN/ACC POWER #1 BREAKER	RUN/ACC POWER #1 RELAY
JJZ 14 YEL	RUN/ACC POWER #1 RELAY (REF LLD)	GENERAL PURPOSE (RUN/ACC FEED #1)
KKA 14 YEL	RUN/ACC POWER #2 BREAKER	RUN/ACC POWER #2 RELAY
KKB 14 YEL	RUN/ACC POWER #2 RELAY (REF LLE)	GENERAL PURPOSE (RUN/ACC FEED #2)

CODE/COLOR	FROM:	TO:
KKC 12 YEL	POWER SEAT RELAY	POWER SEAT (HEATER)
KKD 16 YEL	CONFIRMATION EMERGENCY SHUT OFF SWITCH (IN COACH)	EMERGENCY SHUT OFF SWITCH (ON REMOTE FILL BRACKET)
KKE 16 YEL	EMERGENCY SHUT OFF SWITCH (ON REMOTE FILL BRACKET)	EMERGENCY SHUT OFF SOLENOID (ON LP TANK)
KKF 6 BLK	BATTERY DISCONNECT RELAY	COACH BUSS BAR
KKG 8 BLK	BATTERY MODE SOLENOID	CHASSIS BUSS BAR
KKH 14 YEL	EXTERIOR SERVICE LAMP SWITCH #1	EXTERIOR SERVICE LAMP SWITCH #2
KKJ 14 YEL	EXTERIOR SERVICE LAMP SWITCH #1	EXTERIOR SERVICE LAMP SWITCH #2
KKK 16 YEL	HWH WIRING (SWITCHED BATTERY POWER)	SLIDEOUT ROOM #2 SWITCH (POSITIVE)
KKL 16 YEL	HWH WIRING (SWITCHED BATTERY POWER)	SLIDEOUT ROOM #3 SWITCH (POSITIVE)
KKM 16 YEL	HWH WIRING (SWITCHED BATTERY POWER)	SLIDEOUT ROOM #4 SWITCH (POSITIVE)
KKN 14 YEL	KEYLESS ENTRY PORCH LIGHT OUTPUT	PORCH/STEP/MAP LAMP
KKP 14 YEL	LOUNGE CEILING ROPE LAMP SWITCH (CIRCUIT #1)	LOUNGE CEILING ROPE LAMP (REF CIRCUIT SSZ)
KKR 14 YEL	BEDROOM CEILING ROPE LAMP SWITCH	BEDROOM CEILING ROPE LAMP
KKS 14 YEL	BEDROOM VALANCE LAMP SWITCH	BEDROOM VALANCE LAMP
KKT 14 YEL	BEDROOM "MOOD" LAMP SWITCH	BEDROOM "MOOD" LAMP
KKU 16 YEL	REAR TV SPEAKER OUTPUT (RIGHT POSITIVE)	RIGHT SPEAKER (POSITIVE)
KKV 16 WHT	REAR TV SPEAKER OUTPUT (RIGHT NEGATIVE)	RIGHT SPEAKER (NEGATIVE)
KKW 16 YEL	REAR TV SPEAKER OUTPUT (LEFT POSITIVE)	LEFT SPEAKER (POSITIVE)
KKX 16 WHT	REAR TV SPEAKER OUTPUT (LEFT NEGATIVE)	LEFT SPEAKER (NEGATIVE)

WIRE IDENTIFICATION CHART

CODE/COLOR	FROM:	TO:
KKY 14 YEL	OVERCURRENT PROTECTION (15A FUSE/BREAKER TYPICAL)	COACH LIGHTING,ETC CIRCUIT #8 (REF KKZ)
KKZ 14 WHT	COACH LIGHTING (REF KKY)	GROUND
LLA 14 YEL	OVERCURRENT PROTECTION (15A FUSE/BREAKER TYPICAL)	COACH LIGHTING,ETC CIRCUIT #9 (REF LLB)
LLB 14 WHT	COACH LIGHTING (REF LLA)	GROUND
LLC 14 YEL	SEAT HEATER BREAKER (15 AMP BREAKER TYPICAL)	SEAT HEATER RELAY POSITION 30
LLD 14 WHT	RUN/ACC FEED #1 (REF JJZ)	GROUND
LLE 14 WHT	RUN/ACC FEED #2 (REF KKB)	GROUND
LLF 14 YEL	DOME LAMP RELAY	DOME LAMP
LLG 10/12 YEL	TRAILER BRAKE SIGNAL (OUTPUT FROM CONTROLLER)	TRAILER CONNECTOR (ELECTRIC BRAKES)
LLH 14 WHT	RUN ONLY GROUND SOURCE (CHASSIS SUPPLIED)	AUX START RELAY
LLJ 14 YEL	AUX START RELAY (RUN ONLY POWER)	AUX START SWITCH
LLK 10 YEL	CHASSIS BREAKER PANEL (LH FRT SLIDE)(FRT RAM)	CONTROL MODULE (LH FRT SLIDE)
LLL 10 WHT	CHASSIS GROUND BAR (LH FRT SLIDE)(FRT RAM)	CONTROL MODULE (LH FRT SLIDE)
LLM 10 YEL	CHASSIS BREAKER PANEL (LH FRT SLIDE)(REAR RAM)	CONTROL MODULE (LH FRT SLIDE)
LLN 10 WHT	CHASSIS GROUND BAR (LH FRT SLIDE)(REAR RAM)	CONTROL MODULE (LH FRT SLIDE)
LLP 10 YEL	CHASSIS BREAKER PANEL (REAR SLIDE RAM)	CONTROL MODULE (REAR SLIDE)
LLR 10 WHT	CHASSIS GROUND BAR (REAR SLIDE RAM)	CONTROL MODULE (REAR SLIDE)
LLS 10 YEL	CONTROL MODULE (LEFT FRONT SLIDE)	LT FRT SLIDE FRT RAM (MOTOR DRIVE LINE)
LLT 10 YEL	CONTROL MODULE (LEFT FRONT SLIDE)	LT FRT SLIDE FRT RAM (MOTOR DRIVE LINE)
LLU 10 YEL	CONTROL MODULE (LEFT FRONT SLIDE)	LT FRT SLIDE RR RAM (MOTOR DRIVE LINE)
LLV 10 YEL	CONTROL MODULE (REAR SLIDE)	REAR SLIDEOUT RAM (MOTOR DRIVE LINE)
LLW 10 YEL	CONTROL MODULE (LEFT FRONT SLIDE)	LT FRT SLIDE RR RAM (MOTOR DRIVE LINE)
LLX 10 YEL	CONTROL MODULE (REAR SLIDE)	REAR SLIDEOUT RAM (MOTOR DRIVE LINE)
LLY 16 WHT	CONTROL MODULE (REAR SLIDE)(GROUND)	SLIDEOUT SWITCH (REAR SLIDEOUT)
LLZ 16 YEL	CONTROL MODULE (REAR SLIDE)(RETRACT)	SLIDEOUT SWITCH (REAR SLIDEOUT)
MMA 16 YEL	CONTROL MODULE (REAR SLIDE)(STOP)	SLIDEOUT SWITCH (REAR SLIDEOUT)
MMB 16 YEL	CONTROL MODULE (REAR SLIDE)(GREEN LED)	SLIDEOUT SWITCH (REAR SLIDEOUT)
MMC 16 YEL	CONTROL MODULE (REAR SLIDE)(EXTEND)	SLIDEOUT SWITCH (REAR SLIDEOUT)
MMD 16 YEL	CONTROL MODULE (REAR SLIDE)(RED LED)	SLIDEOUT SWITCH (REAR SLIDEOUT)
MME 10 YEL	CHASSIS SIDE OF SOLENOID (FRT LT/REAR SLIDE RAMS)	BREAKER PANEL BUSS BAR (FRT LT/REAR SLIDE RAMS)
MMF 10 YEL	CHASSIS SIDE OF SOLENOID (FRT RT SLIDE RAMS)	BREAKER PANEL BUSS BAR (FRT RT SLIDE RAMS)
MMG 10 YEL	CHASSIS SIDE OF SOLENOID (REAR SLIDE RAM)	BREAKER PANEL (REAR SLIDE RAM)
MMH 16 YEL	OVERCURRENT PROTECTION (6 AMP BREAKER TYPICAL)	POWER SUNVISOR SWITCH
MMJ 16 WHT	GROUND	POWER SUNVISOR SWITCH
MMK 16 YEL	BEDROOM STEREO (LEFT SPEAKER REF)	CROSS OVER BOX (POSITIVE)
MML 16 WHT	BEDROOM STEREO (LEFT SPEAKER REF)	CROSS OVER BOX (NEGATIVE)
MMM 16 YEL	BEDROOM STEREO (RIGHT SPEAKER REF)	CROSS OVER BOX (POSITIVE
MMN 16 WHT	BEDROOM STEREO (RT/WOOFER SPKER REF)	CROSS OVER BOX (NEGATIVE)

WIRE IDENTIFICATION CHART

CODE/COLOR	FROM:	TO:
MMP 16 YEL	CROSS OVER COIL (POSITIVE)	SUBWOOFER (BEDROOM)
MMR 14 YEL	CHASSIS TOW MARKER LAMPS CIRCUIT	TRAILER CONNECTOR (TAIL/MARKER LAMPS)
MMS 12 YEL	+12V	PASSENGER AC/HEATER CONTROLS
MMT 12 YEL	PASSENGER FAN SWITCH (LOW SPEED)	PASSENGER FAN
MMU 12 YEL	PASSENGER FAN SWITCH (MED SPEED)	PASSENGER FAN
MMV 12 YEL	PASSENGER FAN SWITCH (HIGH SPEED)	PASSENGER FAN
MMW 16 YEL	+12V	PASSENGER CONTROL PANEL LAMPS
MMX 16 WHT	PASSENGER CONTROL PANEL LAMPS	GROUND
MMY 16 WHT	PASSENGER TEMP AND VENT CONTROL	GROUND
MMZ 12 YEL	SLIDEOUT ROOM CONTROL SWITCH (RAM #1)	SLIDEOUT DRIVE MOTOR LEAD #1
NNA 12 YEL	SLIDEOUT ROOM CONTROL SWITCH (RAM #1)	SLIDEOUT DRIVE MOTOR LEAD #2
NNB 16 YEL	CONTROL MODULE (FRONT SLIDE) (SIGNAL)	FRONT SLIDE FRONT RAM (ENCODER)
NNC 16 YEL	CONTROL MODULE (FRONT SLIDE) (+)	FRONT SLIDE FRONT RAM (ENCODER)
NND 16 WHT	CONTROL MODULE (FRONT SLIDE) (-)	FRONT SLIDE FRONT RAM (ENCODER)
NNE 16 YEL	CONTROL MODULE (FRONT SLIDE) (SIGNAL)	FRONT SLIDE REAR RAM (ENCODER)
NNF 16 YEL	CONTROL MODULE (FRONT SLIDE) (+)	FRONT SLIDE REAR RAM (ENCODER)
NNG 16 WHT	CONTROL MODULE (FRONT SLIDE) (-)	FRONT SLIDE REAR RAM (ENCODER)
NNH 12 YEL	CONTROL MODULE (RAM #2)	SLIDEOUT ACTURATOR DRIVE LEAD #1
NNJ 12 YEL	CONTROL MODULE (RAM #2)	SLIDEOUT ACTURATOR DRIVE LEAD #2
NNK 16 YEL	KEYLESS ENTRY TOUCH PAD SIGNAL	ENTRANCE DOOR TOUCH PAD
NNL 16 YEL	PASSENGER TEMP CONTROL (CONTROL OUT)	PASSENGER AC/HEATER
NNM 16 YEL	PASSENGER VENT CONTROL (CONTROL OUT)	PASSENGER VENT
NNN 16 YEL	CONTROL MODULE (RIGHT FRONT SLIDE)(STOP)	SLIDEOUT SWITCH (RIGHT FRONT SLIDE)
NNP 16 YEL	CONTROL MODULE (RIGHT FRONT SLIDE)(GREEN LED)	SLIDEOUT SWITCH (RIGHT FRONT SLIDE)
NNR 16 YEL	CONTROL MODULE (RIGHT FRONT SLIDE)(RED LED)	SLIDEOUT SWITCH (RIGHT FRONT SLIDE)
NNS 16 WHT	CONTROL MODULE (RIGHT FRONT SLIDE)(GROUND)	SLIDEOUT SWITCH (RIGHT FRONT SLIDEOUT)
NNT 16 YEL	CONTROL MODULE (RIGHT FRONT SLIDE)(SIGNAL)	RIGHT FRONT SLIDE,FRONT RAM (ENCODER)
NNU 16 YEL	CONTROL MODULE (RIGHT FRONT SLIDE)(+)	RIGHT FRONT SLIDE,FRONT RAM (ENCODER)
NNV 16 WHT	CONTROL MODULE (RIGHT FRONT SLIDE)(-)	RIGHT FRONT SLIDE,FRONT RAM (ENCODER)
NNW 16 YEL	CONTROL MODULE (RIGHT FRONT SLIDE)(SIGNAL)	RIGHT FRONT SLIDE,REAR RAM (ENCODER)
NNX 16 YEL	CONTROL MODULE (RIGHT FRONT SLIDE)(+)	RIGHT FRONT SLIDE,REAR RAM (ENCODER)
NNY 16 WHT	CONTROL MODULE (RIGHT FRONT SLIDE)(-)	RIGHT FRONT SLIDE,REAR RAM (ENCODER)
NNZ 10 YEL	CHASSIS BREAKER PANEL (RH FRT SLIDE)(FRT RAM)	CONTROL MODULE (RIGHT FRONT SLIDE)
PPA 10 WHT	CHASSIS GROUND BAR (RH FRT SLIDE)(FRT RAM)	CONTROL MODULE (RIGHT FRONT SLIDE)
PPB 10 YEL	CHASSIS BREAKER PANEL (RH FRT SLIDE)(REAR RAM)	CONTROL MODULE (RIGHT FRONT SLIDE)
PPC 10 WHT	CHASSIS GROUND BAR (RH FRT SLIDE)(REAR RAM)	CONTROL MODULE (RIGHT FRONT SLIDE)
PPD 10 YEL	CONTROL MODULE (RIGHT FRONT SLIDE)	RH FRT SLIDE FRT RAM (MOTOR DRIVE LINE)
PPE 10 YEL	CONTROL MODULE (RIGHT FRONT SLIDE)	RH FRT SLIDE FRT RAM (MOTOR DRIVE LINE)

WIRE IDENTIFICATION CHART

CODE/COLOR	FROM:	TO:
PPF 10 YEL	CONTROL MODULE (RIGHT FRONT SLIDE)	RH FRT SLIDE RR RAM (MOTOR DRIVE LINE)
PPG 10 YEL	CONTROL MODULE (RIGHT FRONT SLIDE)	RH FRT SLIDE RR RAM (MOTOR DRIVE LINE)
PPH 14 YEL	CHASSIS CLEARANCE LAMPS CRT #2 (REF MM)	CLEARANCE/MARKER LAMPS
PPJ 14 YEL	PASSENGER SUNVISOR SWITCH DRIVER'S SIDE	PASSENGER SUNVISOR SWITCH PASSENGER'S SIDE
PPK 14 YEL	PASSENGER SUNVISOR SWITCH DRIVER'S SIDE	PASSENGER SUNVISOR SWITCH PASSENGER'S SIDE
PPL 14 YEL	DASH RADIO ACCESSORY POWER	TV/RADIO SPEAKER SELECTOR SWITCH
PPM 12 YEL	OVERCURRENT PROTECTION (15A BREAKER TYPICAL)	LEFT FRONT SLIDEOUT LOCK SWITCH
PPN 12 WHT	LEFT FRONT SLIDEOUT LOCK SWITCH (REF PPM)	GROUND
PPP 12 YEL	OVERCURRENT PROTECTION (15A BREAKER TYPICAL)	RIGHT FRONT SLIDEOUT LOCK SWITCH
PPR 12 WHT	RIGHT FRONT SLIDEOUT LOCK SWITCH (REF PPP)	GROUND
PPS 12 YEL	LEFT FRONT SLIDEOUT LOCK SWITCH	LEFT FRONT SLIDEOUT LOCK MOTOR
PPT 12 YEL	LEFT FRONT SLIDEOUT LOCK SWITCH	LEFT FRONT SLIDEOUT LOCK MOTOR
PPU 12 YEL	RIGHT FRONT SLIDEOUT LOCK SWITCH	RIGHT FRONT SLIDEOUT LOCK MOTOR
PPV 12 YEL	RIGHT FRONT SLIDEOUT LOCK SWITCH	RIGHT FRONT SLIDEOUT LOCK MOTOR
PPW 14 YEL	SLIDEOUT LOCK SWITCH W/SLIDEOUT SWITCH #1 IN DASH	SLIDEOUT ROOM #1 SWITCH (POSITIVE)
PPX 14 YEL	SLIDEOUT LOCK SWITCH W/SLIDEOUT SWITCH #3 IN DASH	SLIDEOUT ROOM #3 SWITCH (POSITIVE)
PPY 14 YEL	SLIDEOUT LOCK SWITCH W/SLIDEOUT SWITCH #4 IN DASH	SLIDEOUT ROOM #4 SWITCH (POSITIVE)
PPZ 12 YEL	CHASSIS SUPPLIED WIRING	TRAILER TOW BATTERY FEED (7 WAY TOW CONNECTOR)
RRA 14 YEL	GENERAL SWITCH	GENERAL LAMP
RRB 14 YEL	GENERAL SWITCH	GENERAL LAMP
RRC 14 YEL	GENERAL SWITCH	GENERAL LAMP
RRD 14 YEL	GALLEY CEILING FAN SWITCH	GALLEY CEILING FAN
RRE 14 YEL	10 OHM RESISTOR	LOUNGE CEILING FAN (LOW SPEED)
RRF 14 YEL	BEDROOM READING LAMP SWITCH	BEDROOM READING LAMP
RRG 14 YEL	BEDROOM READING LAMP SWITCH #1 (2 SWITCH SYSTEM)	BEDROOM READING LAMP SWITCH #2 (2 SWITCH SYSTEM)
RRH 14 YEL	BEDROOM READING LAMP SWITCH #1 (2 SWITCH SYSTEM)	BEDROOM READING LAMP SWITCH #2 (2 SWITCH SYSTEM)
RRJ 12 WHT	SEVEN PIN CONNECTOR (TRAILER CONNECTOR)	GROUND
RRK 16 YEL	2ND GALLEY HOLDING TANK	SELECTOR SWITCH
RRL 16 YEL	HOLDING TANK SELECTOR SWITCH	MONITOR PANEL
RRM 14 YEL	CENTER POWER SUNVISOR SWITCH	CENTER SUNVISOR
RRN 14 YEL	CENTER POWER SUNVISOR SWITCH	CENTER SUNVISOR
RRP 16 YEL	THERMOSTAT (LOW STAGE)	FURNACE (LOW STAGE)
RRR 16 YEL	THERMOSTAT (HIGH STAGE)	FURNACE (HIGH STAGE)
RRS 16 YEL	SLIDEOUT LOCK SWITCH (#1)	SLIDEOUT LOCK SWITCH (#2)
RRT 16 YEL	AWNING CONTROL BOX (LOCATED IN HOUSING PIN 1)	DOOR AWNING LIMIT SWITCH (LOCATED IN HOUSING PIN 1)
RRU 16 WHT	AWNING CONTROL BOX (LOCATED IN HOUSING PIN 2)	DOOR AWNING LIMIT SWITCH (LOCATED IN HOUSING PIN 2)
RRV 14 YEL	VIDEO CAMERA SWITCHER	MONITOR
RRW 14 YEL	LOCKOUT POSITIONING SWITCH	FIREPLACE LOCKOUT RECP

WIRE IDENTIFICATION CHART

CODE/COLOR	FROM:	TO:
RRX 10 YEL	12V BREAKER PANEL (30 AMP TYPICAL)	SMART FUSE BLOCK (POSITIVE)
RRY 18 YEL	SMART FUSE BLOCK (COMMUNICATION BUS)	SMART FUSE SWITCH PANEL
RRZ 18 WHT	SMART FUSE BLOCK (COMMUNICATION GROUND)	SMART FUSE SWITCH PANEL
SSA 14 WHT	FRONT LEFT SLIDE LOCK (INDICATOR OUTPUT-GROUND)	FRONT LEFT LOCK SWITCH LED
SSB 14 WHT	FRONT RIGHT SLIDE LOCK (INDICATOR OUTPUT-GROUND)	FRONT RIGHT LOCK SWITCH LED
SSC 14 YEL	JACK CONTROL PANEL (LEVEL)	REMOTE AUTO LEVEL SWITCH
SSD 14 YEL	JACK CONTROL PANEL (STORE)	REMOTE AUTO LEVEL SWITCH
SSE 14 YEL	JACK CONTROL PANEL (COMMON)	REMOTE AUTO LEVEL SWITCH (+)HWH (-)KWIKEE
SSF 14 YEL	JACK CONTROL PANEL (INDICATOR LED)	REMOTE AUTO LEVEL SWITCH (-)HWH (+)KWIKEE
SSG 18 YEL	TRANSFORMER	AUTO GENERATOR START MONITOR PANEL
SSH 18 WHT	TRANSFORMER	AUTO GENERATOR START MONITOR PANEL
SSJ 10 YEL	BRAKE CONTROLLER POWER (30-AMP BREAKER TYPICAL)	BRAKE CONTROLLER (POWER INPUT)
SSK 14 WHT	BRAKE CONTROLLER (GROUND)	GROUND
SSL 14 YEL	CHASSIS REAR LAMP WIRING (LEFT TURN ONLY)	LEFT TURN SIGNAL *NOT COMBO TURN/BRAKE*
SSM 14 YEL	CHASSIS REAR LAMP WIRING (RIGHT TURN ONLY)	RIGHT TURN SIGNAL *NOT COMBO TURN/BRAKE*
SSN 18 WHT	FRONT RIGHT SLIDEOUT LOCK END SWITCH (FROM NNS)	CONTROL MODULE (RIGHT FRONT SLIDE)(GROUND)
SSP 18 WHT	LEFT FRONT SLIDEOUT LOCK END SWITCH (FROM DS)	CONTROL MODULE (LEFT FRONT SLIDE)(GROUND)
SSR 16 YEL	EXTERIOR HOLDING TANK SELECTOR SWITCH	EXTERIOR MONITOR PANEL
SSS 16 YEL	EXTERIOR HOLDING TANK SELECTOR SWITCH	2ND GALLEY HOLDING TANK

CODE/COLOR	FROM:	TO:
SST 14 YEL	GALLEY LAMP SWITCH #1	GALLEY LAMP SWITCH #2
SSU 14 YEL	GALLEY LAMP SWITCH #1	GALLEY LAMP SWITCH #2
SSV 14 YEL	BATH CEILING LAMP SWITCH #1 (2 SWITCH SYSTEM)	BATH CEILING LAMP SWITCH #2 (2 SWITCH SYSTEM)
SSW 14 YEL	BATH CEILING LAMP SWITCH #1 (2 SWITCH SYSTEM)	BATH CEILING LAMP SWITCH #2 (2 SWITCH SYSTEM)
SSX 12 YEL	DOOR AWNING SWITCH	DOOR AWNING CONTROL RELAY (RELAY POSITION 87A EXTEND)
SSY 12 WHT	DOOR AWNING SWITCH	DOOR AWNING LIMIT SWITCH
SSZ 14 YEL	LOUNGE CEILING ROPE LAMP SWITCH (CIRCUIT #2)	LOUNGE CEILING ROPE LAMP (REF CIRCUIT KKP)
TTA 14 YEL	LEVELING SYSTEM CONTROLS	INDICATOR LAMP/ALARM (POSITIVE)
TTB 14 WHT	LEVELING SYSTEM CONTROLS	INDICATOR LAMP/ALARM (NEGATIVE)
TTC 10 YEL	CHASSIS BATTERY	SLIDEOUT LOCK BREAKER
TTD 14 YEL	VEHICLE LEFT HEADLAMP HI BEAM CIRCUIT	LEFT HI BEAM LAMP
TTE 14 YEL	RELAY	RIGHT DOCKING LAMP
TTF 14 YEL	RELAY	LEFT DOCKING LAMP
TTG 18 YEL	FRONT THERMOSTAT (MAIN)	REMOTE SENSOR
TTH 18 YEL	FRONT THERMOSTAT (MAIN)	REMOTE SENSOR
TTJ 14 YEL	BRAKE LAMP CIRCUIT BREAKER	BRAKE LAMP RELAY
TTK 14 YEL	RIGHT TURNLAMP CIRCUIT BREAKER	RIGHT TURN LAMP RELAY
TTL 14 YEL	LEFT TURN LAMP CIRCUIT BREAKER	LEFT TURN LAMP RELAY
TTM 14 YEL	BACKUP LAMP CIRCUIT BREAKER	BACKUP LAMP RELAY

WIRE IDENTIFICATION CHART

CODE/COLOR	FROM:	TO:	CODE/COLOR	FROM:	TO:
TTN 14 YEL	PARK LAMP CIRCUIT BREAKER	PARK LAMP RELAY			
TTP 12 YEL	AWNING CONTROL BOX	PATIO AWNING #2 (MOTOR POSITIVE)			
TTR 12 WHT	AWNING CONTROL BOX	PATIO AWNING #2 (MOTOR GROUND)			
TTS 16 YEL	AWNING CONTROL BOX	PATIO AWNING #2 (SWITCH EXTEND)			
TTT 16 YEL	AWNING CONTROL BOX	PATIO AWNING #2 (SWITCH COMMON)			
TTU 16 YEL	AWNING CONTROL BOX	PATIO AWNING #2 (SWITCH RETRACT)			
TTV 16 YEL	AWNING CONTROL BOX	WIND SENSOR #2 (POSITIVE)			
TTW 16 YEL	AWNING CONTROL BOX	WIND SENSOR #2 (NEGATIVE)			
TTX 16 YEL	AWNING CONTROL BOX	WIND SENSOR #2 (SPEED OUTPUT)			
TTY 18 YEL	CHASSIS BATT DISCONNECT RELAY (TERMINAL I)	CHASSIS BATT DISCONNECT SWITCH			
TTZ 18 YEL	CHASSIS BATT DISCONNECT RELAY (TERMINAL S)	CHASSIS BATT DISCONNECT SWITCH			
UUA 18 YEL	CHASSIS BATT DISCONNECT RELAY LOAD SIDE FUSE FEED	CHASSIS BATT DISCONNECT SWITCH INDICATOR LAMP			
UUB 18 YEL	CHASSIS BATT DISCONNECT RELAY BATTERY SIDE FUSE FEED	CHASSIS BATT DISCONNECT SWITCH			
UUC 18 WHT	CHASSIS BATT DISCONNECT SWITCH	GROUND			
UUD 12 YEL	RIGHT REAR SLIDEOUT LOCK SWITCH	RIGHT REAR SLIDEOUT LOCK MOTOR			
UUE 12 YEL	RIGHT REAR SLIDEOUT LOCK SWITCH	RIGHT REAR SLIDEOUT LOCK MOTOR			