Table of Contents

2006 Journey/Meridian P39K Wiring Diagram Book

DANGER

Danger of electrical shock, burns or death. Always remove all power sources before attempting any repair, service or diagnostic work. Power can be present from shore power, generator, inverter or battery. All power sources must be disabled and secured before performing any service.

CAUTION

If you lack the skills, tools or equipment to perform diagnostic or repair work leave such work to an authorized Winnebago Industries dealer or other qualified shop.

		P32T	P34H	P36G	P39K	
RED	12-UL	136135-07-050	136135-07-053	136135-07-053	136135-07-053	
	12-CA	136136-07-050	136136-07-053	136136-07-053	136136-07-053	
MAIN	4-3 UL	136141-01-026	136141-01-033	136141-01-030	136141-01-027	67Q
	4-3 CA	136142-01-026	136142-01-033	136142-01-030	136142-01-027	67Q
GRN	12-UL	136135-08-050	136135-08-053	136135-08-053	136135-08-053	
	12-CA	136136-08-050	136136-08-053	136136-08-053	136136-08-053	
INVERTER CHARGER MAIN	10-UL	136137-01-037	136137-01-035	136137-01-035	136137-01-035	13X
	10-CA	136138-01-037	136138-01-035	136138-01-035	136138-01-035	13X
YEL	14-UL	136131-05-080	136131-05-075	136131-05-072	136131-05-065	40D
	14-CA	136134-05-080	136134-05-075	136134-05-072	136134-05-065	40D
YEL-2	14-UL	136131-05-071 1	136131-05-075	136131-05-072	136131-05-070	144 15U 79W
	14-CA	136134-05-071 1	136134-05-075	136134-05-072	136134-05-070	144 15U 79W
YEL-3	14-UL	136131-17-020	136131-17-020	136131-17-020	136131-17-020	13X
	14-CA	136134-17-020	136134-17-020	136134-17-020	136134-17-020	13X
GLD	12-UL	X	136135-10-096	136135-10-055	136135-10-130	21M 54E
	12-CA	X	136136-10-096	136136-10-055	136136-10-130	21M 54E
WHT	12 UL	136135-09-049	136135-09-033	136135-09-033	136135-09-033	1B2
	12 CA	136136-09-049	136136-09-033	136136-09-033	136136-09-033	1B2
INVERTER CHARGER SUB	10-UL	136137-01-037	136137-01-035	136137-01-035	136137-01-035	13X
	10-CA	136138-01-037	136138-01-035	136138-01-035	136138-01-035	13X
BLU	14-UL	136131-02-198	136131-02-165	136131-02-165	136131-02-171 1	
	14-CA	136134-02-198	136134-02-165	136134-02-165	136134-02-171 1	
BRN	14-UL	136131-03-130	136131-03-046	136131-03-105	136131-03-103 1	
	14-CA	136134-03-130	136134-03-046	136134-03-105	136134-03-103 1	
PUR	14-UL	136131-04-195 13X	136131-04-155	136131-04-194	136131-04-188	
	14-CA	136134-04-195 13X	136134-04-155	136134-04-194	136134-04-188	
	14-UL	136131-04-227				40D
	14-CA	136134-04-227				40D
BLK	14-UL	136131-06-107	136131-06-046	136131-06-075	136131-06-065 1	
	14-CA	136134-06-107	136134-06-046	136134-06-075	136134-06-065 1	

1 SEE DETAIL BA FOR CONNECTOR INSTALLATION.

NOTES:

RELEASE	REV A	DATE	DWG NO 153624

REV	ZONE	REVISION RECORD	DATE	DFTR-ORIG

79W REFRIGERATOR-4 DOOR
67Q GEN-7.5KW-ONAN-QUIET DIESEL
40D INVERTER-DC/AC,600 WATT
54E WASHER/DRYER
21M WASHER/DRYER PREP
39C GEN-6.5KW ONAN LP MARQ GOLD
15U REFRIGERATOR/FRZR W/ICEMAKER
13X INVERTER/CHARGER 2.0 KW
144 REFRIGERATOR-DOUBLE DOOR
265 CODES/STANDARDS-CSA/CMVSS
1B1 CODES/STANDARDS USA

1B1 265

WINNEBAGO

DFTR	ORIG. DATE
CHKR	ALL DIMENSIONS ARE IN MILLIMETERS
P.E.	
M.E.	FIRST USED
DSNR	06 P-SERIES

UNSPECIFIED TOLERANCES ARE:
WHOLE DIM (X) : 3
ONE-PLACE (X.X) : 1.5
TWO-PLACE (X.XX) : 0.50
ANGLE : 1°

MATERIAL:

THIRD ANGLE PROJECTION

DO NOT SCALE DRAWING

TITLE:
LOAD CENTER/ATS ASM

SHEET 1 OF 5 | PART NO 153624 | REV

DWG NO 153624

		P32T	P34H	P36G	P39K
GROUND MAIN		136145-01-029	136145-01-023	136145-01-023	136145-01-023
GROUND SUB		136145-01-029	136145-01-023	136145-01-023	136145-01-023
ATS GROUND		136145-01-010	136145-01-008	136145-01-008	136145-01-011
INVERTER CASE GROUND		136145-01-010	136145-01-010	136145-01-010	136145-01-020
GENERATOR CABLE ASM		136148-02-094	136148-02-105	136148-02-108	136148-02-115
CONDUIT ASM-CENTRAL A/C		151704-01-027	151704-01-029	151704-01-029	151704-01-029
THROW IN WIRE #1	14-UL	136131-03-062 △1	136131-04-140	136131-03-085 △1	136131-04-050 △1
	14-CA	136134-03-062 △1	136134-04-140	136134-03-085 △1	136134-04-050 △1
THROW IN WIRE #2	14-UL	136131-04-150	136131-03-040 △1	136131-04-150	136131-04-006 △1
	14-CA	136134-04-150	136134-03-040 △1	136134-04-150	136134-04-006 △1
THROW IN WIRE #3	14-UL	136131-12-092 (40D)	136131-06-020 △1	136131-12-062 (40D)	136131-02-085 △1
	14-CA	136134-12-092 (40D)	136134-06-020 △1	136134-12-062 (40D)	136134-02-085 △1
THROW IN WIRE #4	14-UL	X	136131-12-105	----------	136131-04-135
	14-CA	X	136134-12-105	----------	136134-04-135
THROW IN WIRE #5	14-UL	X	---------	----------	136131-02-017 △1
	14-CA	X	----------	----------	136134-02-017 △1
THROW IN WIRE #6	14-UL	X	---------	----------	136131-02-003 △1
	14-CA	X	----------	----------	136134-02-003 △1
THROW IN WIRE #7	14-UL	X	---------	----------	X
	14-CA	X	----------	----------	X
THROW IN WIRE #8	14-UL	X	---------	----------	X
	14-CA	X	----------	----------	X
THROW IN WIRE #9	14-UL	X	---------	----------	X
	14-CA	X	----------	----------	X
THROW IN WIRE #10	14-UL	X	---------	----------	X
	14-CA	X	----------	----------	X

		P32T	P34H	P36G	P39K
SLIDEOUT #1 WIRE #1		136151-05-027 △4	136151-03-017 △2	136151-03-030 △4	136151-03-060 △4
SLIDEOUT #1 WIRE #2		136151-03-027 △4	136151-06-017 △2	----------	X
SLIDEOUT #2 WIRE #1		X	----------	----------	136151-04-020 △2
SLIDEOUT #3 WIRE #1		X	X	X	136151-02-017 △2
SLIDEOUT #3 WIRE #2		X	X	X	136151-06-017 △2
SLIDEOUT #3 WIRE #3		X	X	X	136151-02-022 △4
SLIDEOUT #3 WIRE #4		X	X	X	X

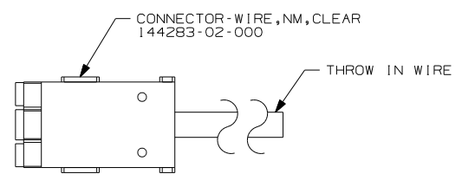

DETAIL BA

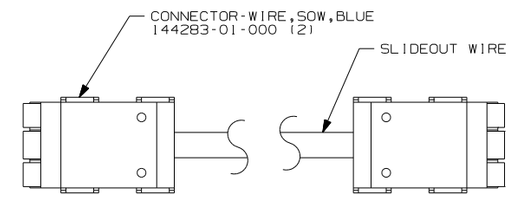

DETAIL BB

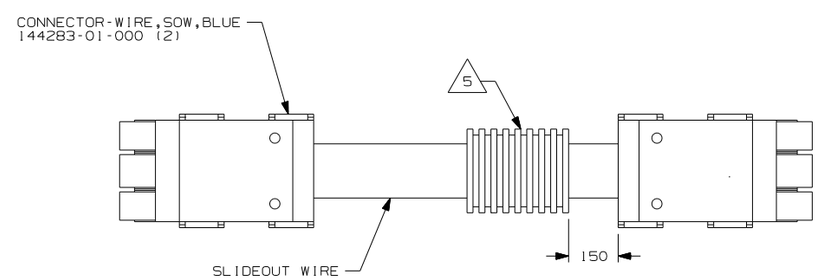

DETAIL BC

△5 APPLY 300MM OF CONDUIT-CONVOLUTE 41953-05-000 OVER WIRE AT DIMENSION SHOWN AND SECURE BOTH ENDS OF TUBING TO WIRE WITH TAPE 8363-01-000

△4 SEE DETAIL BC FOR CONNECTER INSTALLATION

△3 SEE WIRING INSTL-BODY,110V FOR ADDITIONAL INFORMATION.

△2 SEE DETAIL BB FOR CONNECTOR INSTALLATION.

△1 SEE DETAIL BA FOR CONNECTOR INSTALLATION.

NOTES:

(40D) INVERTER-DC/AC,600 WATT

(265) CODES/STANDARDS-CSA/CMVSS

(181) CODES/STANDARDS USA

(181) (265)

FIRST USED

06 P-SERIES

DO NOT SCALE DRAWING

TITLE: LOAD CENTER/ATS ASM

SHEET 2 | PART NO 153624 | REV

DWG NO 153624

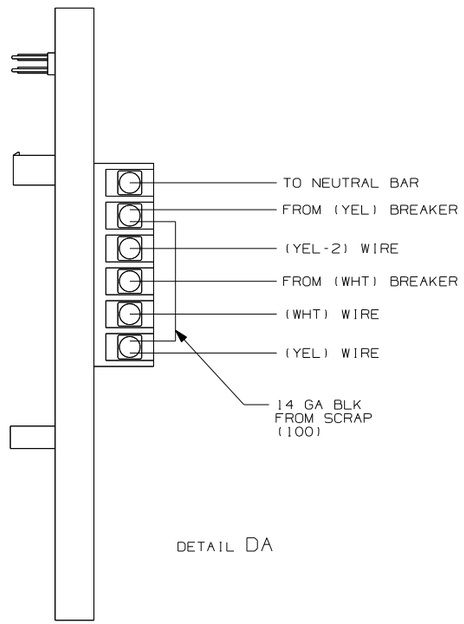

DETAIL DA

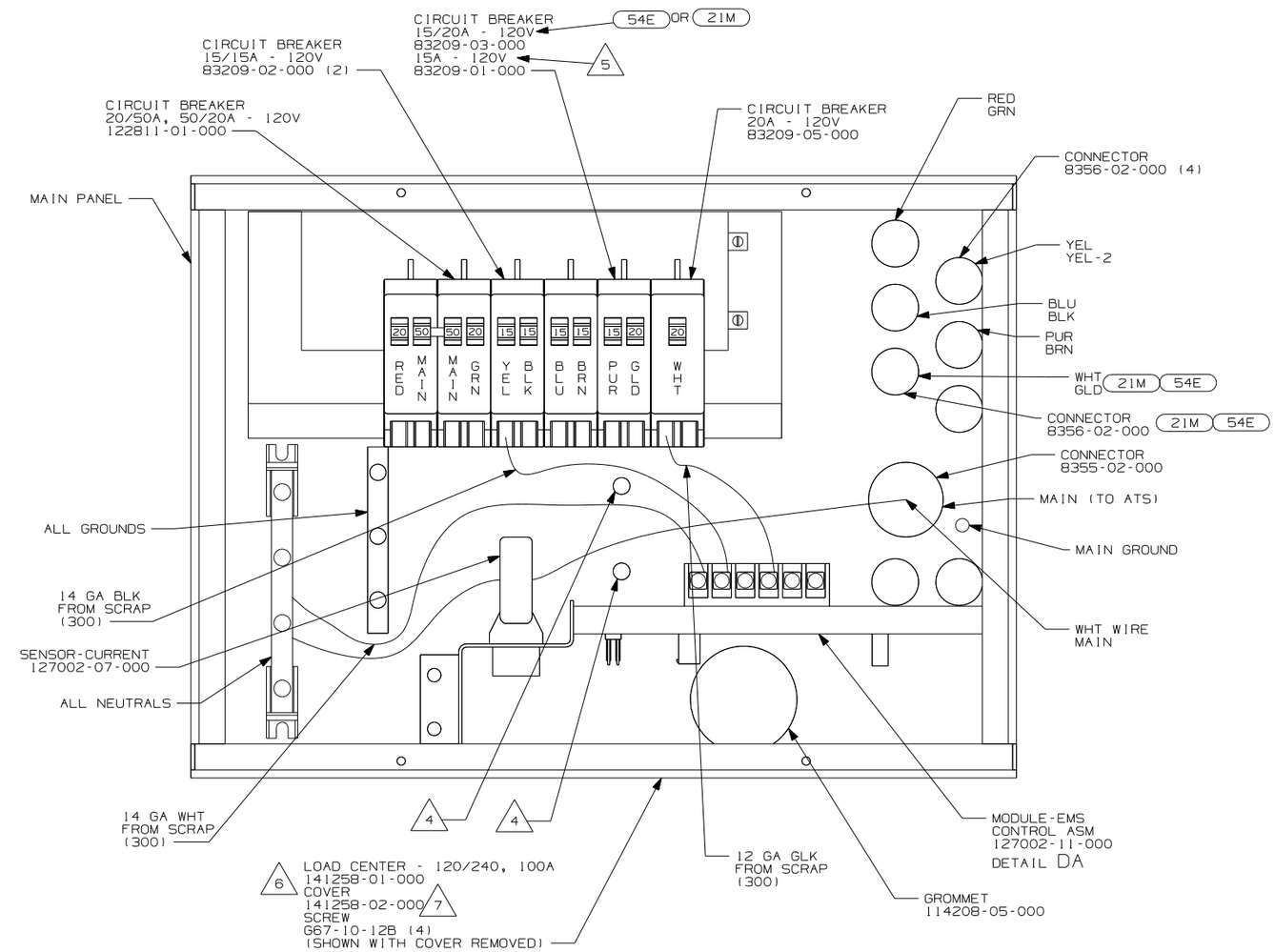

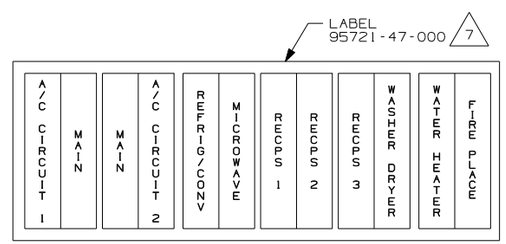

INSTALL LABEL ON FRONT PANEL BELOW BREAKERS BETWEEN MOUNTING HOLES

NOTES:

7. INSTALLED BY ASSEMBLY LINE.
6. ALL WIRES ARE TO BE 500MM LONG INSIDE OF BOX.
5. WITHOUT (54E) OR (21M)
4. ATTACH WIRES TO BACKSIDE OF LOAD CENTER, USE EXISTING HOLES AND TIE-WIRE 116673-01-000.

3. ALL 110V STRANDED WIRE W/O TERMINALS TO BE STRIPPED 10MM AND SOLDER DIPPPED.

2. ALL WIRES ARE NOT SHOWN FOR CLARITY.

1. ALL GROUND WIRES TO BE COVERED WITH TUBING 8041-02-000.

(54E) WASHER/DRYER
(21M) WASHER/DRYER PREP
(40D) INVERTER-DC/AC,600 WATT
(265) CODES/STANDARDS-CSA/CMVSS
(1B1) CODES/STANDARDS USA

FOR ELECTRICAL TORQUE SPECIFICATIONS SEE DWG NO. 128783-01-000

X-X FOR ELECTRICAL CALLOUTS SEE DWG NO. 121339-01-000

(1B1) (265) (40D)

FIRST USED 06 P-SERIES

DO NOT SCALE DRAWING

TITLE: LOAD CENTER/ATS ASM

SHEET 3 PART NO 153624 REV

DWG NO 153624

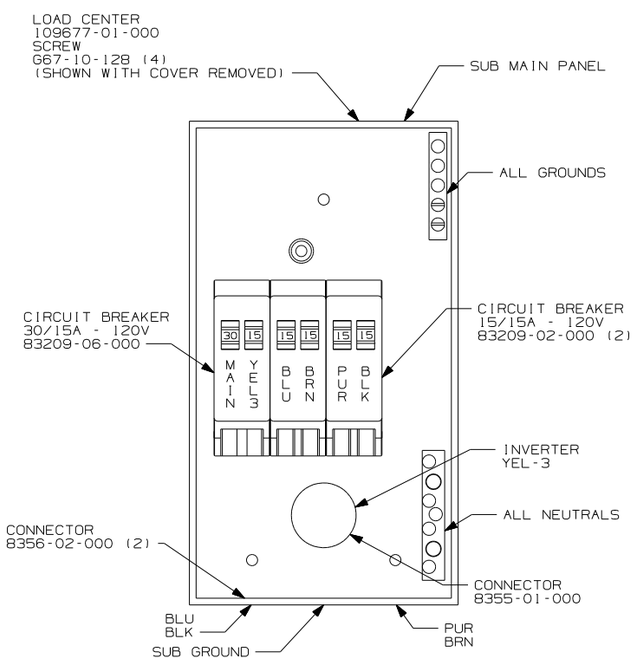

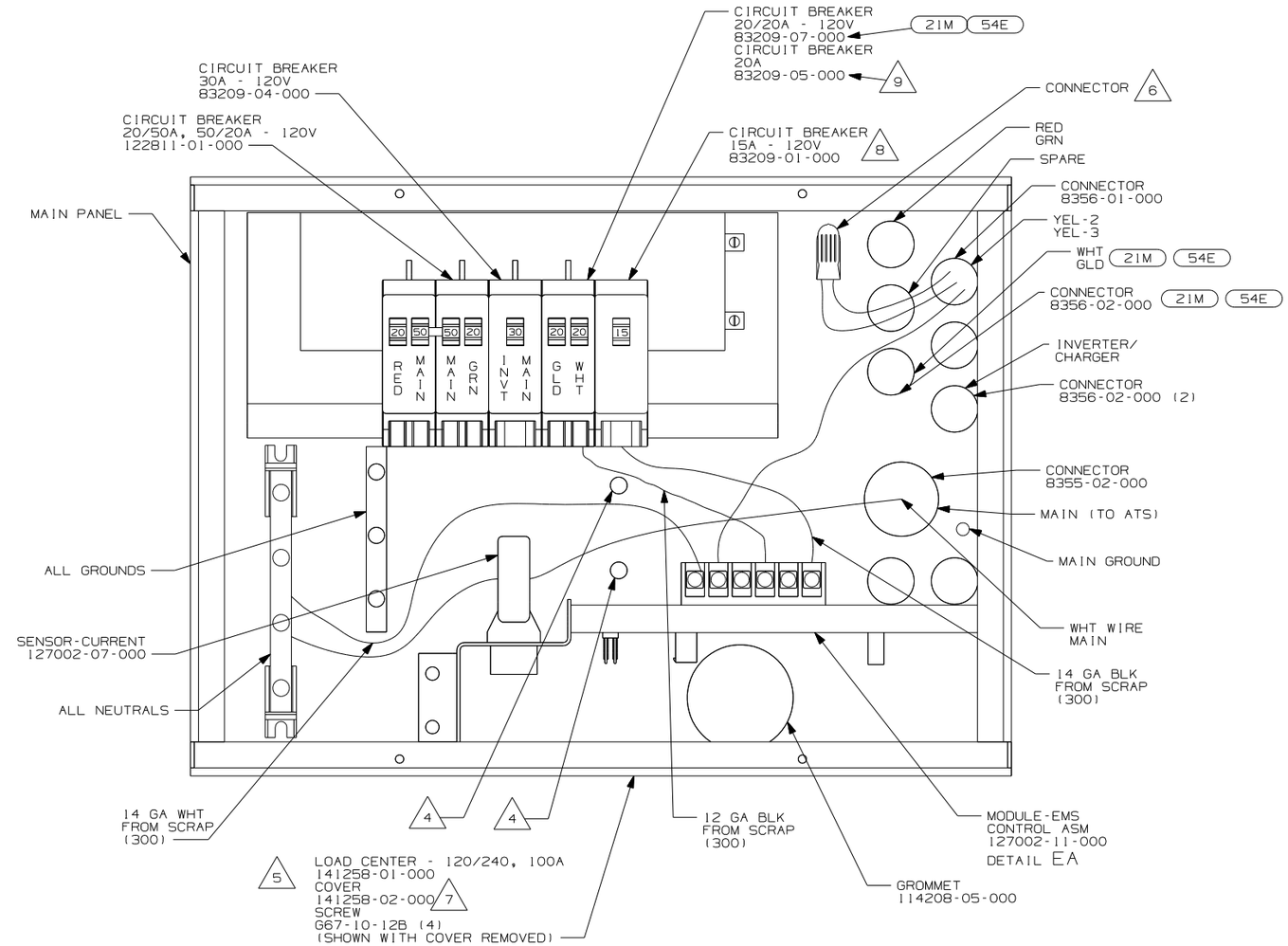

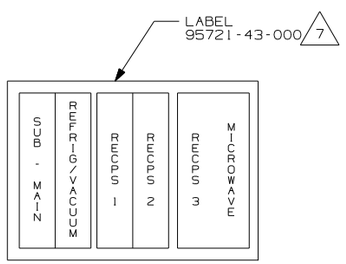

INSTALL LABEL
BELOW PANEL
ON CABINET DOOR

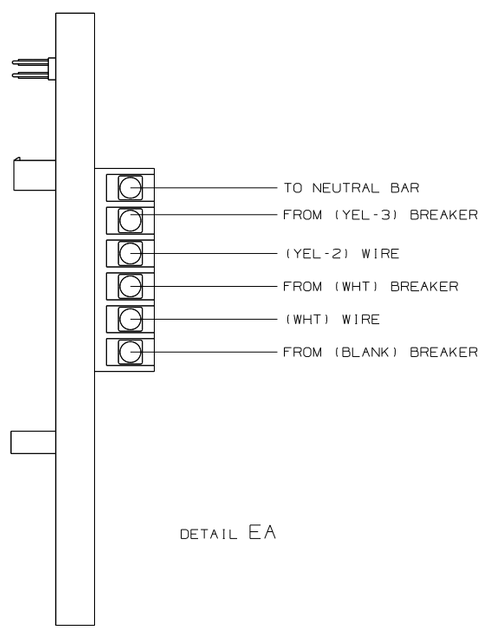

DETAIL EA

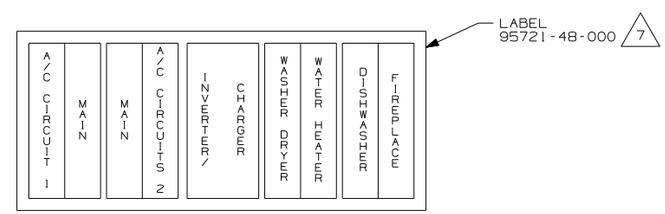

INSTALL LABEL ON FRONT
PANEL BELOW BREAKER
BETWEEN MOUNTING HOLES

NOTES:

1. ALL GROUND WIRES TO BE COVERED WITH TUBING 8041-02-000.
2. ALL WIRES ARE NOT SHOWN FOR CLARITY.
3. ALL 110V STRANDED WIRE W/O TERMINALS TO BE STRIPPED 10MM AND SOLDER DIPPED.
4. ATTACH WIRES TO BACKSIDE OF LOAD CENTER, USE EXISTING HOLES AND TIE-WIRE 116673-01-000.
5. ALL WIRES ARE TO BE 500MM LONG INSIDE OF BOX.
6. DO NOT CONNECT WHT WIRE FROM YEL-2, YEL-3 CIRCUITS TO NEUTRAL BAR. CONNECT TO EACH OTHER WITH CONNECTOR 8313-01-000 AS SHOWN.
7. INSTALLED BY ASSEMBLY LINE.
8. BREAKER AND JUMPER WIRE NEEDED TO MAKE THE EMS PANEL FUNCTION CORRECTLY.
9. WITHOUT 21M OR 54E

54E WASHER/DRYER
21M WASHER/DRYER PREP
13X INVERTER/CHARGER 2.0 KW
78J ELECTRICAL SYSTEM-50 AMP
265 CODES/STANDARDS-CSA/CMVSS
1B1 CODES/STANDARDS USA

1B1 265 78J 13X

FOR ELECTRICAL TORQUE SPECIFICATIONS SEE DWG NO. 128783-01-000

X-X FOR ELECTRICAL CALLOUTS SEE DWG NO. 121339-01-000

FIRST USED 06 P-SERIES

DO NOT SCALE DRAWING

TITLE: LOAD CENTER/ATS ASM

SHEET 4 PART NO 153624 REV

DWG NO 153624

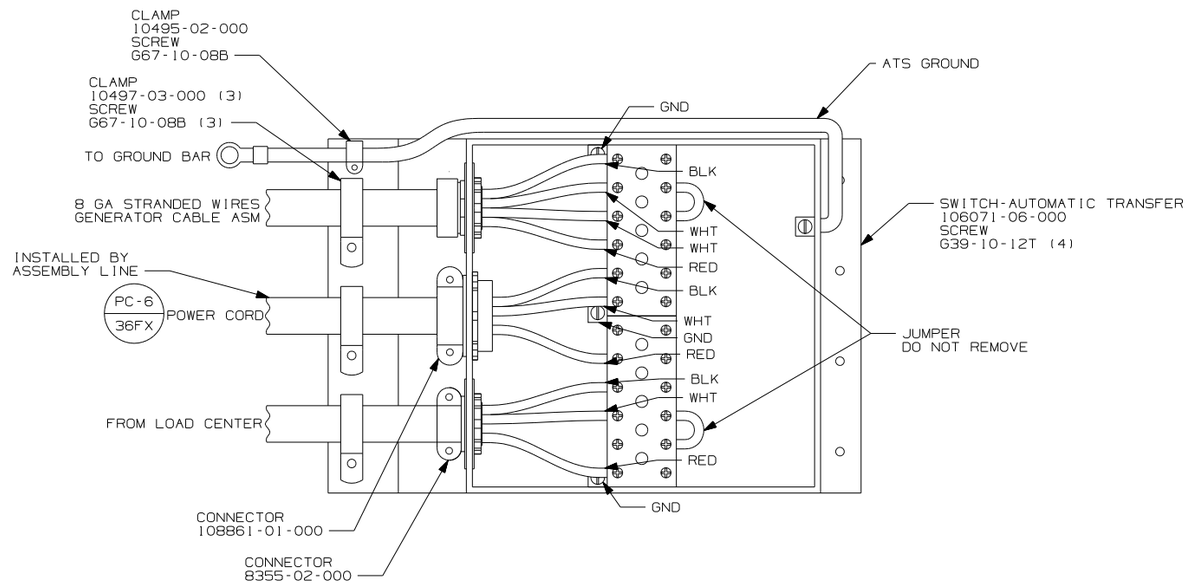

265 CODES/STANDARDS-CSA/CMVSS

181 CODES/STANDARDS USA

181 265

1 NOT USED WITH P39W & P36G.

NOTES:

FOR ELECTRICAL TORQUE SPECIFICATIONS SEE DWG NO. 128783-01-000

X-X FOR ELECTRICAL CALLOUTS SEE DWG NO. 121339-01-000

FIRST USED 06 P-SERIES

DO NOT SCALE DRAWING

TITLE: LOAD CENTER/ATS ASM

SHEET 5 PART NO 153624 REV

RELEASE	REV A	DATE	DWG NO 138913
REV	ZONE	REVISION RECORD	DATE / DFTR-ORIG

WITHOUT HEAT PUMP

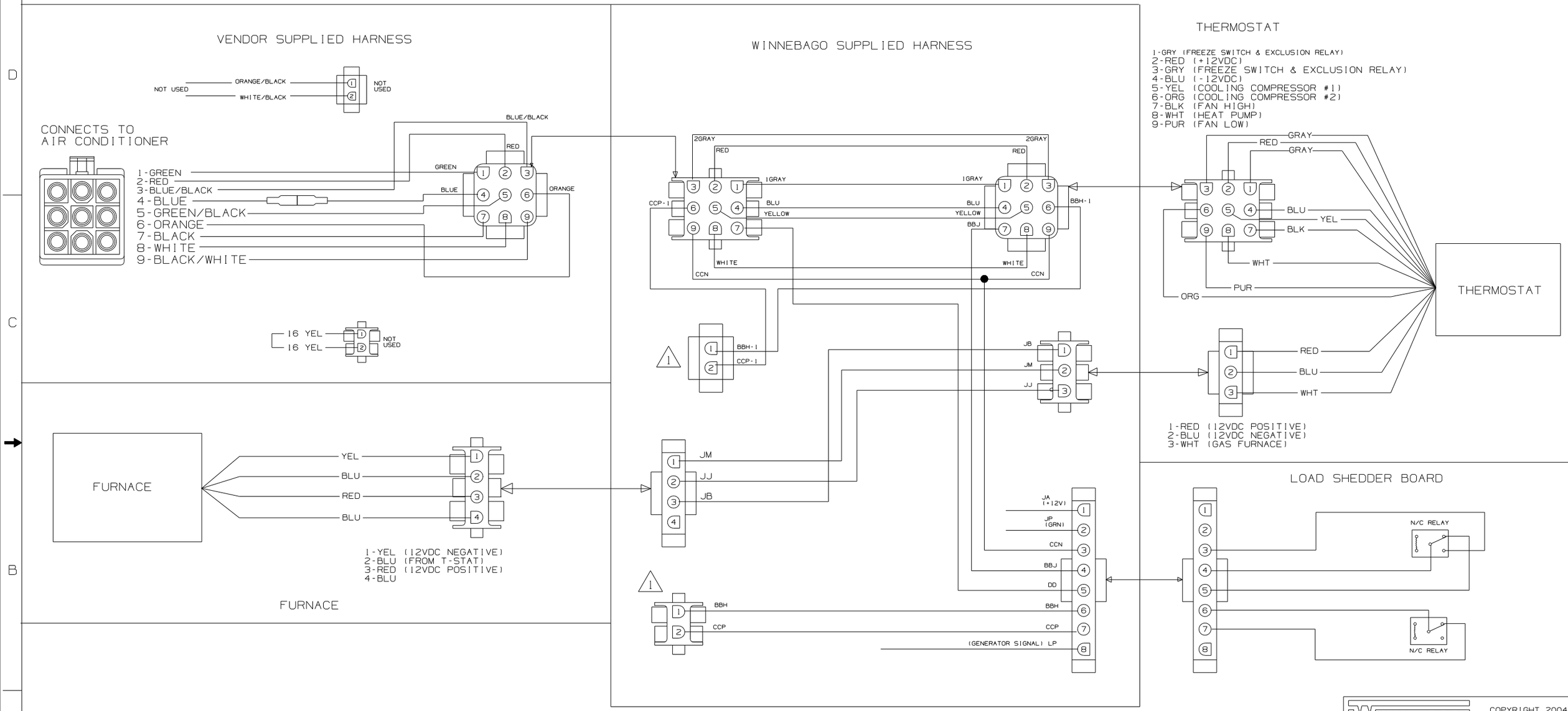

WIRING DIAGRAM-THERMOSTAT,EXT
(WIRE ASM 135131
WITHOUT HEAT PUMP)

1. CONNECT HOUSING TOGETHER.

NOTES:

DFTR	ORIG. DATE
CHKR	ALL DIMENSIONS ARE IN MILLIMETERS
P.E.	
M.E.	FIRST USED
DSNR	03 SERIES

UNSPECIFIED TOLERANCES ARE:
WHOLE DIM (X) :
ONE-PLACE (X.X) :
TWO-PLACE (X.XX) :
ANGLE :
THIRD ANGLE PROJECTION

MATERIAL:

DO NOT SCALE DRAWING

TITLE: WIRING DIAGRAM-AC/HEAT/EMS

SHEET 1 OF 2 | PART NO 138913

DWG NO 138913

WITH HEAT PUMP

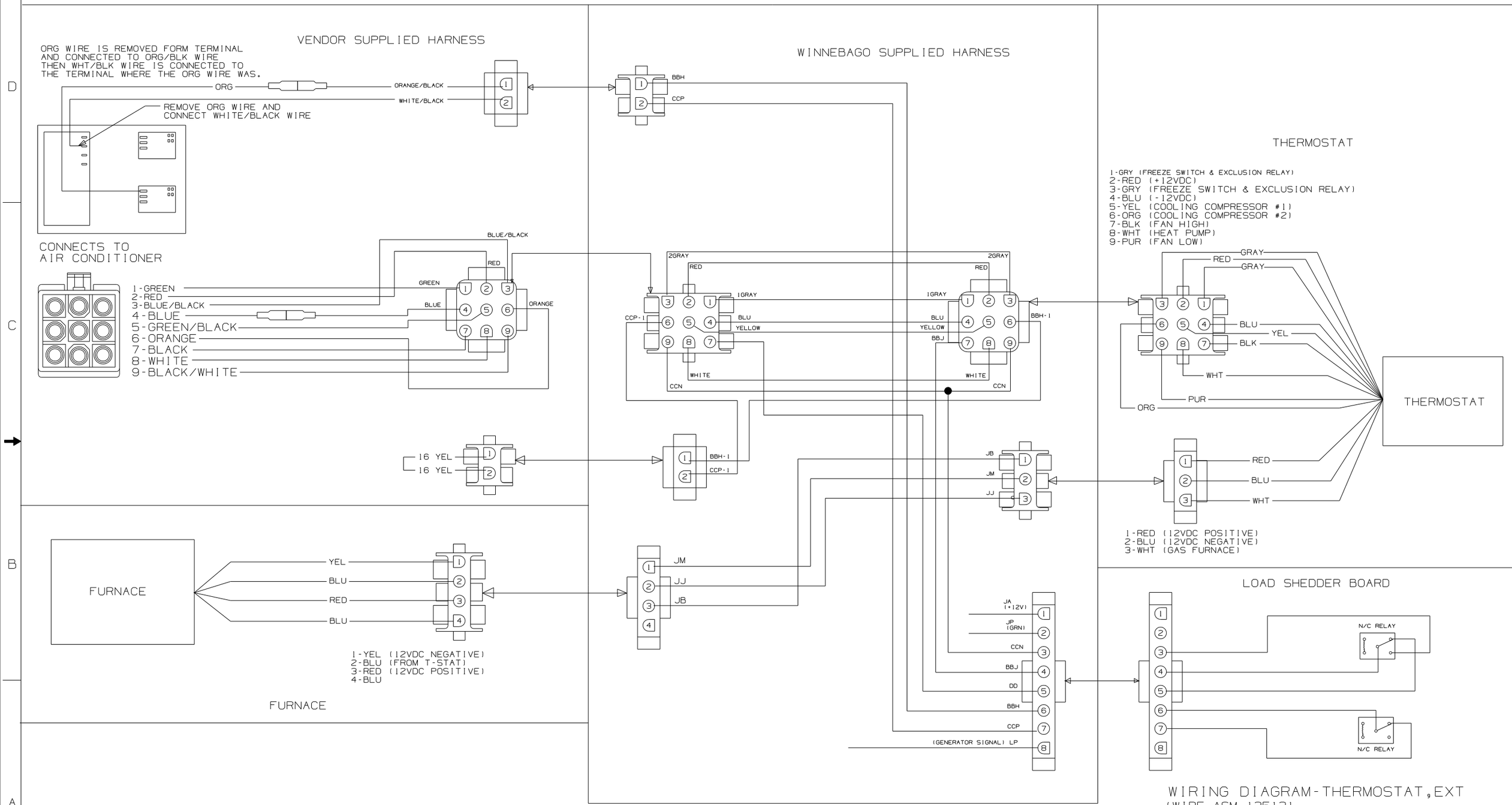

WIRING DIAGRAM-THERMOSTAT,EXT
(WIRE ASM 135131
WITH HEAT PUMP)

1. RLC FOR 2001 THIS RESET WAS DELETED.

NOTES:

FIRST USED	03 SERIES
	DO NOT SCALE DRAWING
TITLE:	WIRING DIAGRAM-AC/HEAT/EMS
SHEET 2	PART NO 138913

DWG NO	SHEET	SERIES
152091-01	1	300,400,700
152091-02	2	D,F,G
152091-03	3	P,S,R
152091-04	4	500

RELEASE	REV A	DATE	DWG NO 152091
REV	ZONE	REVISION RECORD	DATE	DFTR-ORIG

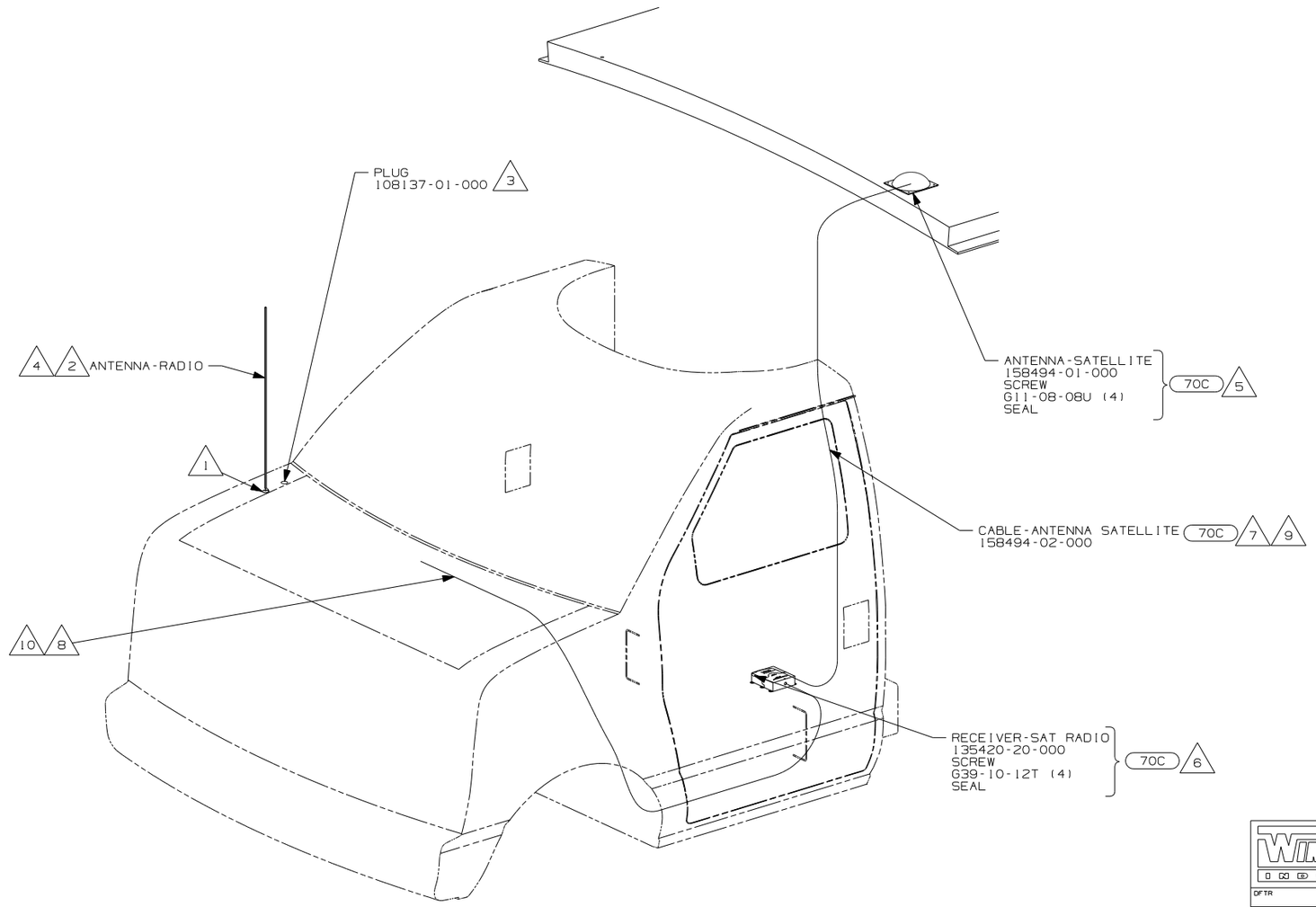

NOTES:

10 RECEIVER CABLE SUPPLIED WITH RECEIVER.

9 ON 300-SER AND 400-SER ROUTE ANTENNA CABLE FROM UNDER DRIVER'S SEAT UP B-POST, INTO WINGWALL, THROUGH SLEEP BOARD ASM TO ANTENNA HOLE IN ROOF ASM.

8 ROUTE RECEIVER CABLE ALONG WITH CHASSIS HARNASS TO BATTERY BOOST SWITCH, CONTINUE RECEIVER CABLE TO DASH RADIO.

7 ON 700-SER ROUTE ANTENNA CABLE FROM UNDER DRIVER'S SEAT UP B-POST, INTO WINGWALL, UP THROUGH ENTERTAINMENT CENTER BEHIND SPEAKER, ROUTE CABLE THROUGH ROUTED PATH IN ROOF ASM.

6 MOUNT RECEIVER TO CAB FLOOR UNDER DRIVERS SEAT NEXT TO FORD MODULE. BE SURE NOT TO SCREW THROUGH ANY WIRES THAT GO TO THE MODULE. SEAL ALL SCREWS.

5 MOUNT ANTENNA SUCH THAT BASE IS SQUARE WITH ROOF AND HOLE IS DIRECTLY OVER HOLE IN ROOF. SEAL BOTH THE HOLE IN THE ROOF AND ANTENNA BASE AT SCREWS.

4 DO NOT RELOCATE ANTENNA ON 400 AND 700 SERIES UNITS. LEAVE IN FACTORY LOCATION.

3 NOT USED ON 400 AND 700 SERIES.

2 SUPPLIED WITH CHASSIS.

1 SEE FRAME ASM-CHASSIS FOR HOLE LOCATION AND SIZE.

WINNEBAGO INDUSTRIES

DFTR	ORIG. DATE
CHKR	ALL DIMENSIONS ARE IN MILLIMETERS
P.E.	
M.E.	FIRST USED
DSNR	06 MOTORHOMES

UNSPECIFIED TOLERANCES ARE:
WHOLE DIM (X) :
ONE-PLACE (X.X) :
TWO-PLACE (X.XX) :
ANGLE :
THIRD ANGLE PROJECTION

MATERIAL:

DO NOT SCALE DRAWING

TITLE:
ANTENNA INSTL-RADIO AND CB

SHEET 1 OF 4 | PART NO 152091 | REV

DWG NO 152091

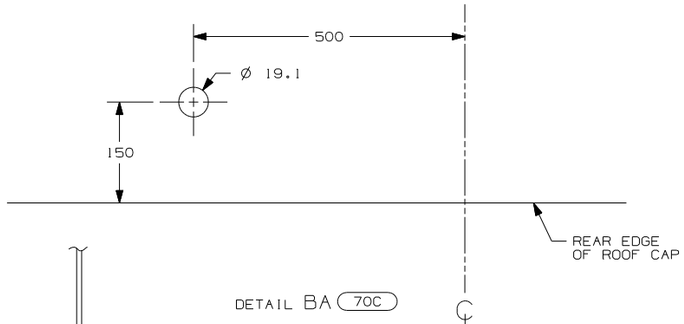

DETAIL BA (70C)

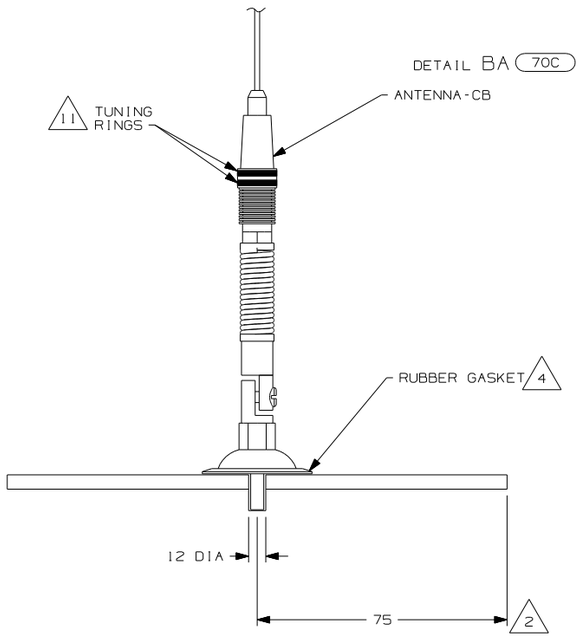

VIEW BC (40J)

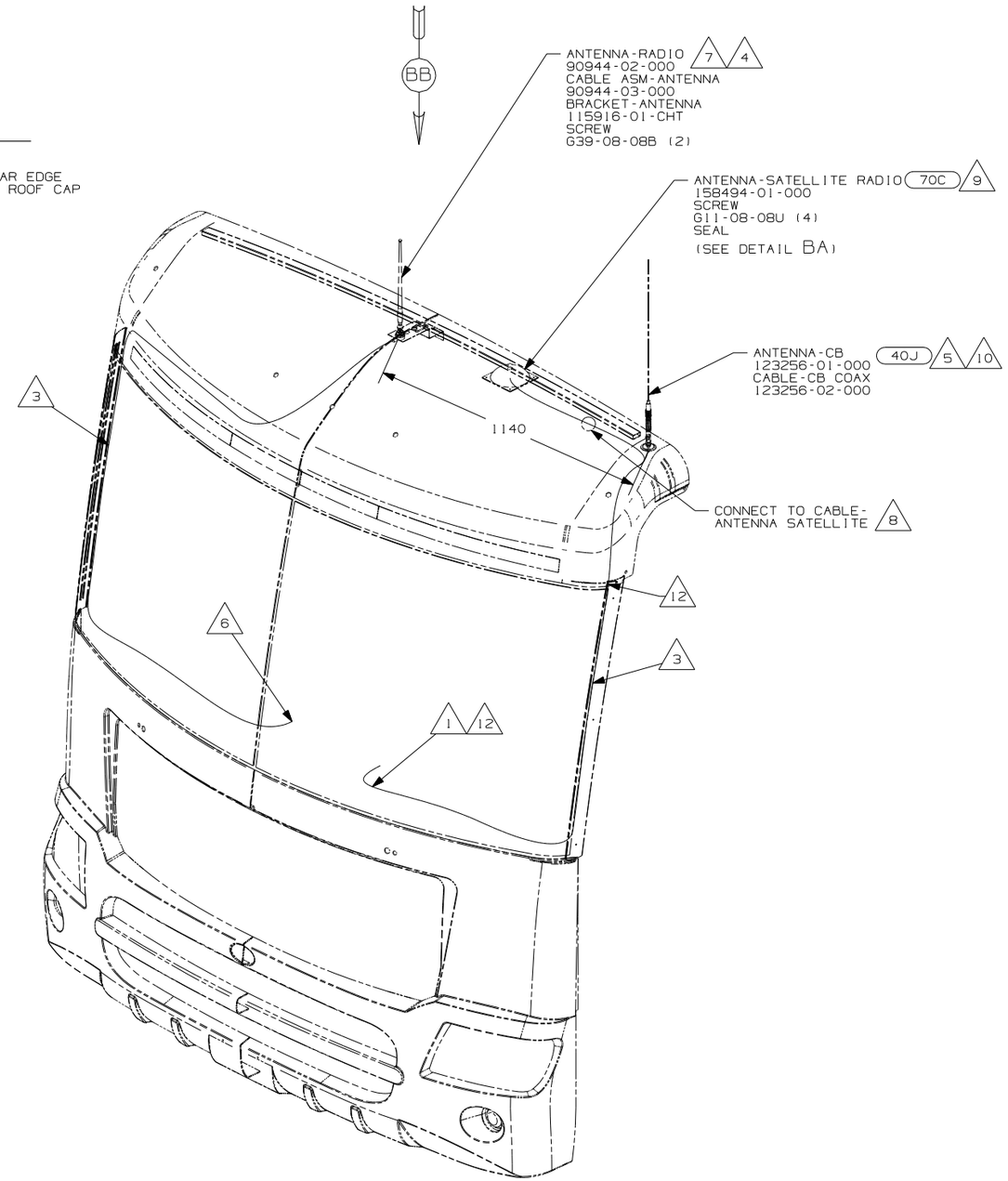

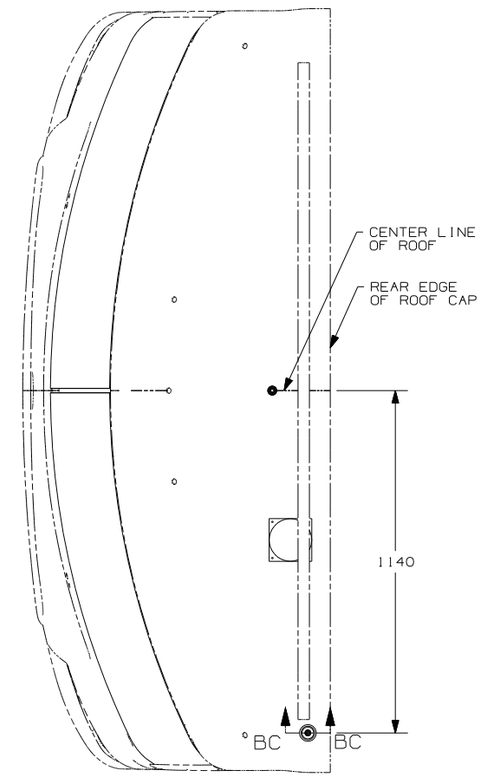

VIEW BB (40J)

NOTES:

12 PROVIDE A 700 mm DROP OF CB ANTENNA CABLE FROM THE TOP OF THE A-PILLAR TO CONNECT TO THE ANTENNA AND PLACE THE EXCESS CABLE IN THE CB PREP BAG LOCATED UNDER THE DASH.

11 TUNING RINGS ARE TO BE BOTH ADJUSTED TO THE TOP OF THEIR TRAVEL AND TIGHTENED AGAINST EACH OTHER.

10 TIGHTEN JOINTS BETWEEN ANTENNA BASE AND ANTENNA PIVOT AND ALSO THE MAST AND ATENNA PLATE.

9 MOUNT ANTENNA SUCH THAT BASE IS SQUARE W/ REAR OF ROOF CAP & HOLE IS DIRECTLY OVER HOLE IN FIBERGLASS. SEAL HOLE IN ROOF CAP, BASE AT SCREWS.

8 SEE WIRING INSTL-FRONT END FOR ADDITIONAL INFORMATION.

7 USE HOLE IN BRACKET AS GUIDE TO DRILL 13 DIAMETER HOLE IN FIBERGLASS.

6 TO RADIO.

5 ATTACH ANTENNA-CB GROUND WIRE TO CAB FRAME, USE SCREW G39-08-08B.

4 SEAL AROUND ANTENNA BASE.

3 ROUTE CABLE ALONG A-POST,UNDER TRIM COVER.

2 MEASURED FROM REAR EDGE OF FIBERGLASS CAP.

1 SEE WIRING INSTL-FRONT END FOR LOCATION OF COAX END AND LABEL.

(70C) RADIO - SATELLITE

(40J) CB RADIO PREP

FIRST USED	06 MOTORHOMES
	DO NOT SCALE DRAWING
TITLE:	ANTENNA INSTL-RADIO AND CB
SHEET 2	PART NO 152091 REV

DWG NO 152091

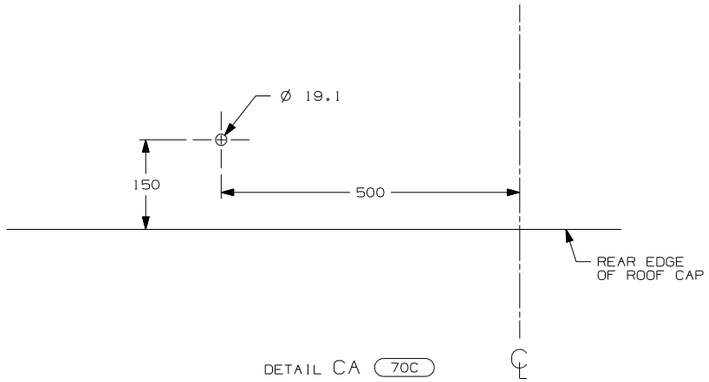

DETAIL CA (70C)

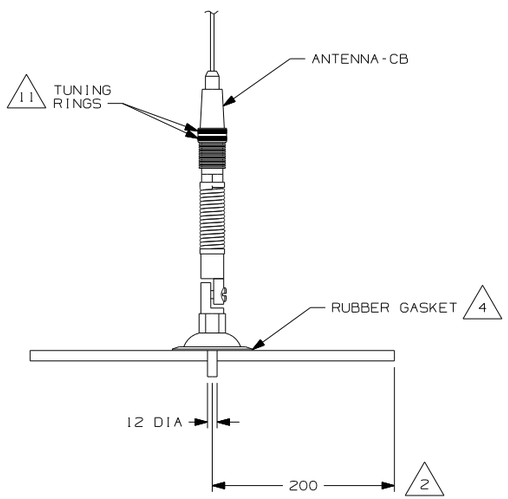

VIEW CC (40J)

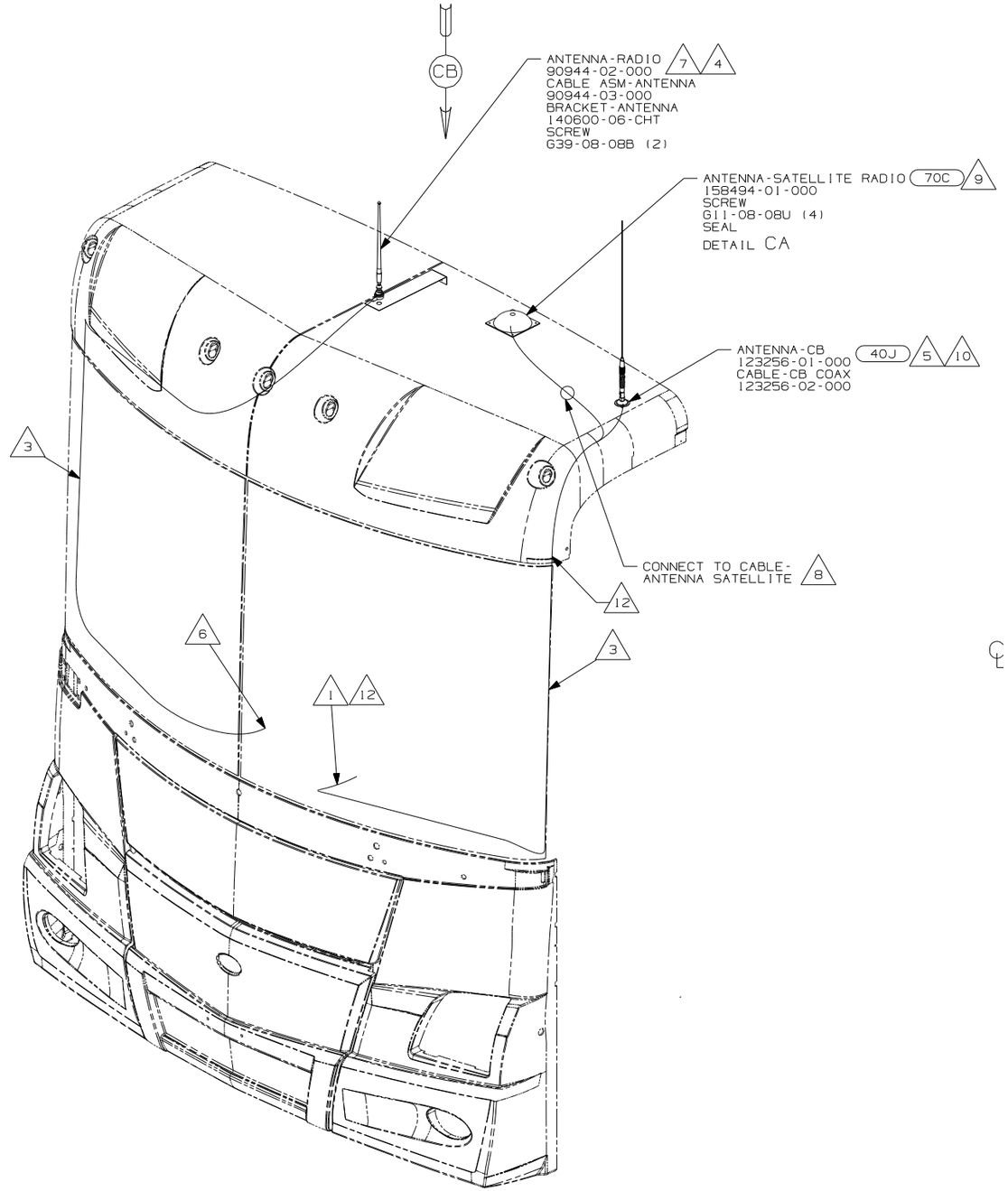

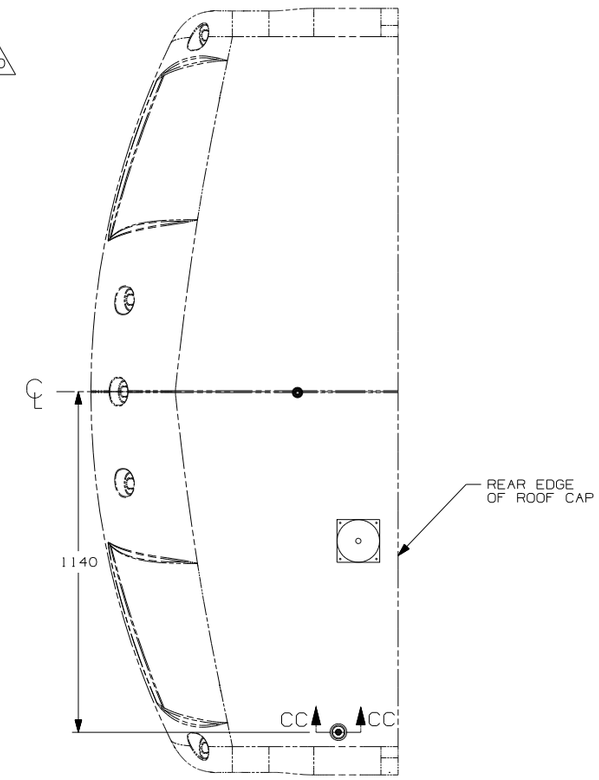

VIEW CB (40J)

NOTES:

12 PROVIDE A 1000 DROP OF CB ANTENNA CABLE FROM THE TOP OF THE A-PILLAR TO CONNECT TO THE ANTENNA AND PLACE THE EXCESS CABLE IN THE CB PREP BAG LOCATED UNDER THE DASH.

11 TUNING RINGS ARE TO BE BOTH ADJUSTED TO THE TOP OF THEIR TRAVEL AND TIGHTENED AGAINST EACH OTHER.

10 TIGHTEN JOINTS BETWEEN ANTENNA BASE AND ANTENNA PIVOT AND ALSO THE MAST AND ANTENNA PLATE.

9 MOUNT ANTENNA SUCH THAT BASE IS SQUARE W/REAR OF ROOF CAP & CENTER HOLE OF ANTENNA DIRECTLY OVER HOLE IN FIBERGLASS. SEAL HOLE, BASE, AND SCREWS.

8 SEE WIRING INSTL-FRONT END FOR ADDITIONAL INFORMATION.

7 USE HOLE IN BRACKET AS GUIDE TO DRILL 13 DIAMETER HOLE IN FIBERGLASS.

6 TO RADIO.

5 ATTACH ANTENNA-CB GROUND WIRE TO CAB FRAME, USE SCREW G39-08-08B.

4 SEAL AROUND ANTENNA BASE.

3 ROUTE CABLE ALONG A-POST,UNDER TRIM COVER.

2 MEASURED FROM REAR EDGE OF FIBERGLASS CAP.

1 SEE WIRING INSTL-FRONT END FOR LOCATION OF COAX END AND LABEL.

(70C) RADIO - SATELLITE

(40J) CB RADIO PREP

FIRST USED	06 MOTORHOMES
	DO NOT SCALE DRAWING
TITLE:	ANTENNA INSTL-RADIO AND CB
SHEET 3	PART NO 152091 REV

DWG NO 152091

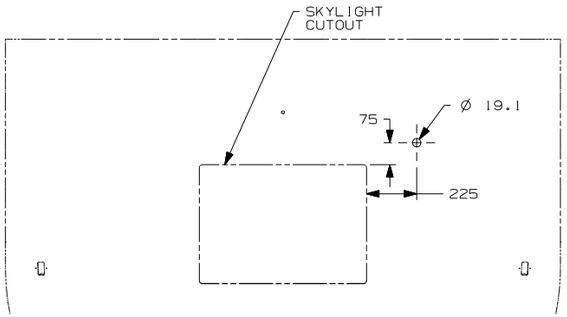

DETAIL DA (70C)

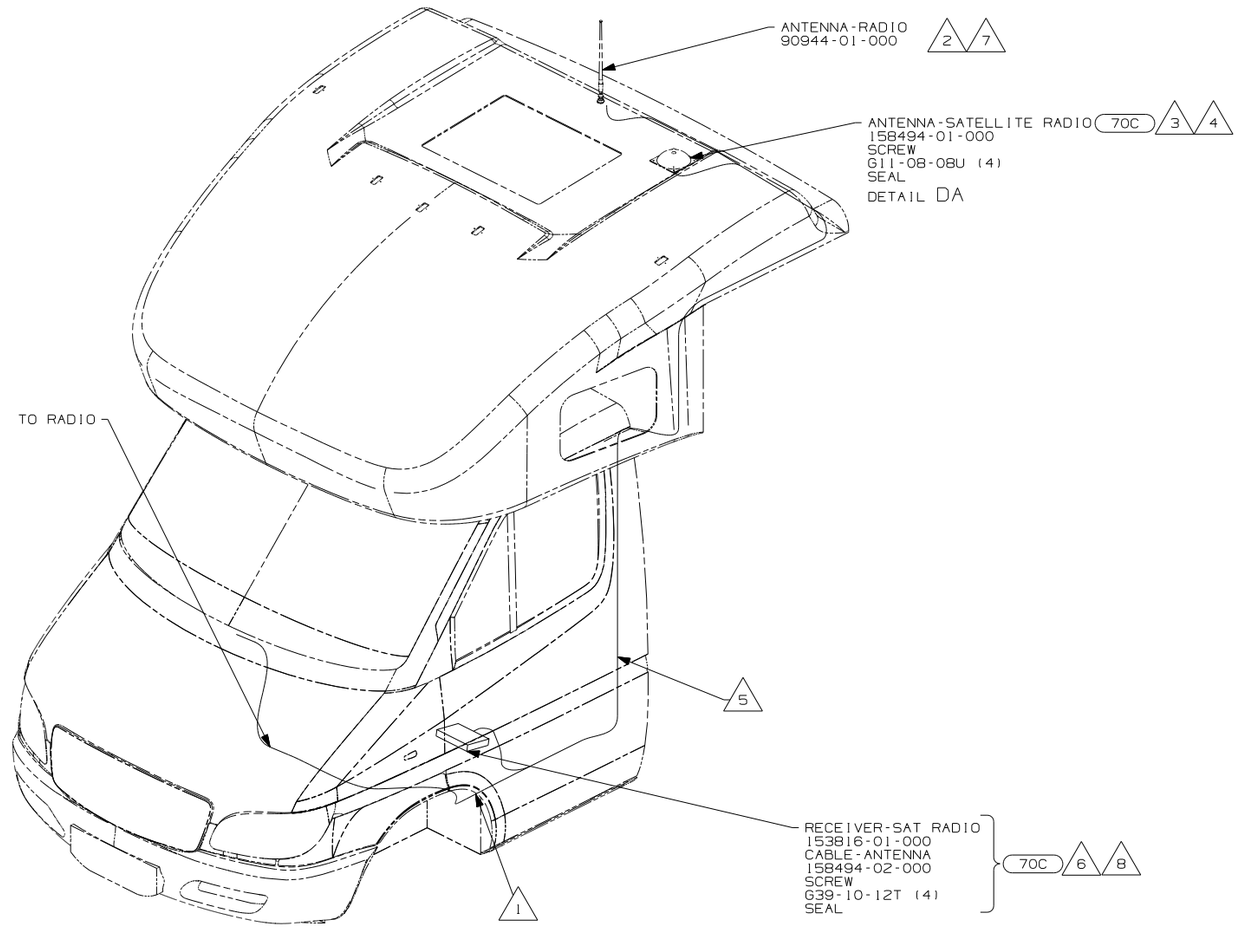

NOTES:

1. ROUTE RADIO ANTENNA CABLE FROM DASH RADIO THROUGH STEP WELL UP B-POST TO ROOF CAP.
2. SEAL AROUND ANTENNA BASE.
3. MOUNT ANTENNA SUCH THAT BASE IS SQUARE W/REAR OF ROOF CAP & CENTER HOLE OF ANTENNA DIRECTLY OVER HOLE IN FIBERGLASS. SEAL HOLE, BASE, AND SCREWS.
4. SEE WIRE INSTL-CHASSIS FOR ADDITIONAL INFORMATION.
5. ROUTE SATELLITE RADIO ANTENNA CABLE ALONG B-POST TO BENEATH DRIVERS SEAT TO SATELLITE RADIO RECEIVER. PLUG ANTENNA CABLE INTO RECEIVER TERMINAL LABELED 'ANTENNA'.
6. MOUNT RECEIVER TO FLOOR UNDER DRIVER'S SEAT. SEAL ALL SCREWS.
7. CUT AND REMOVE A 75MM X 75MM AREA OF THE ALUMINUM INSULATION CENTERED ABOUT THE RADIO ANTENNA HOLE IN ROOF CAP.
8. CONNECT CeNET CABLE SUPPLIED WITH SATELLITE RECEIVER BETWEEN DASH RADIO AND SATELLITE RECEIVER TERMINAL LABELED 'HEADUNIT'.

(70C) RADIO - SATELLITE

FOR ELECTRICAL TORQUE SPECIFICATIONS SEE DWG NO. 128783-01-000

(X-X) FOR ELECTRICAL CALLOUTS SEE DWG NO. 121339-01-000

FIRST USED: 06 MOTOR HOMES

DO NOT SCALE DRAWING

TITLE: ANTENNA INSLT-RADIO AND CB

SHEET 4 | PART NO 152091 | REV

RELEASE	REV A	DATE	DWG NO 152119

REV	ZONE	REVISION RECORD	DATE	DFTR-ORIG

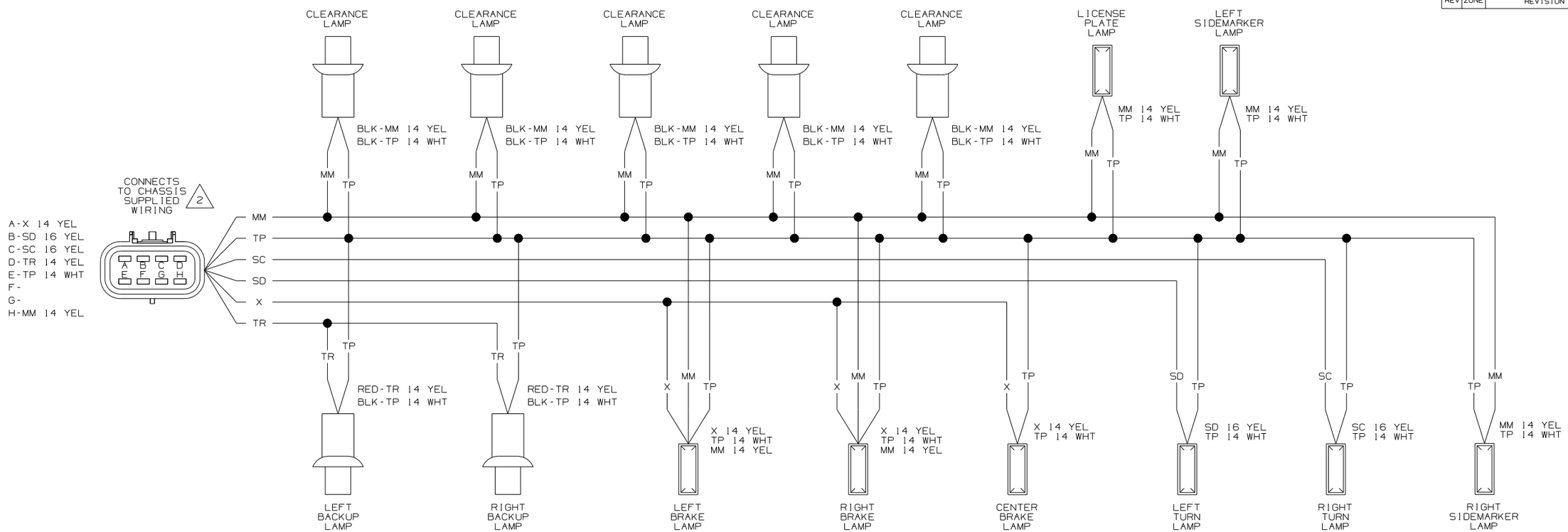

WIRING DIAGRAM-BACKWALL,FL
(WIRE ASM 146189-03 REV-G)
(WINNEBAGO)

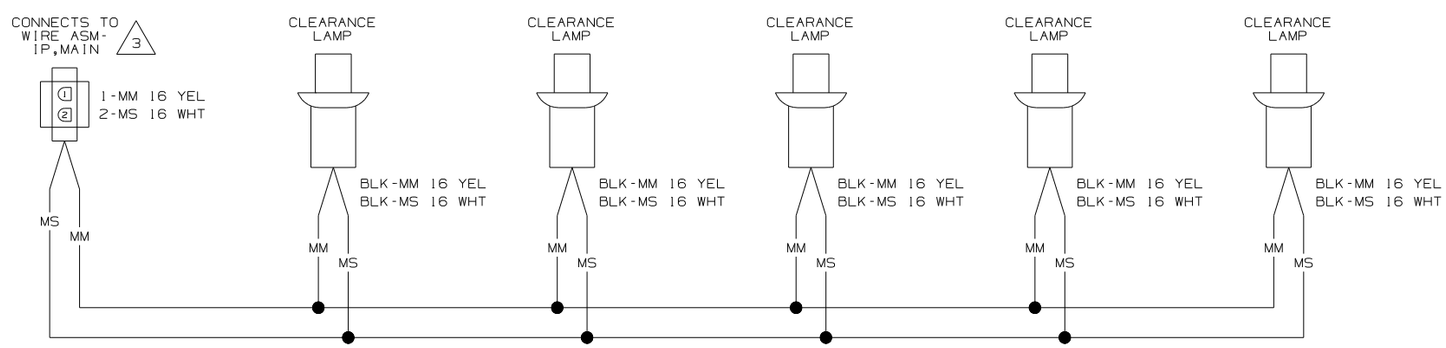

WIRING DIAGRAM-CLEARANCE LAMPS
(WIRE ASM 126486-03 REV-F)
(WINNEBAGO & ITASCA)

3 SEE WIRING DIAGRAM-AUTO FOR ADDITIONAL INFORMATION.

2 SEE MANUFACTURERS DIAGRAM FOR ADDITIONAL INFORMATION.

1. SPLICES ARE THEORETICAL AND MAY DIFFER IN THE HARNESS.

NOTES:

DFTR	ORIG. DATE
CHKR	ALL DIMENSIONS ARE IN MILLIMETERS
P.E.	
M.E.	FIRST USED 06 P-SER
DSNR	

UNSPECIFIED TOLERANCES ARE:
WHOLE DIM (X) :
ONE-PLACE (X.X) :
TWO-PLACE (X.XX) :
ANGLE :
THIRD ANGLE PROJECTION

MATERIAL:

DO NOT SCALE DRAWING

TITLE: WIRING DIAGRAM-AUTO LAMPS

SHEET 1 OF 3 | PART NO 152119

DWG NO 152119

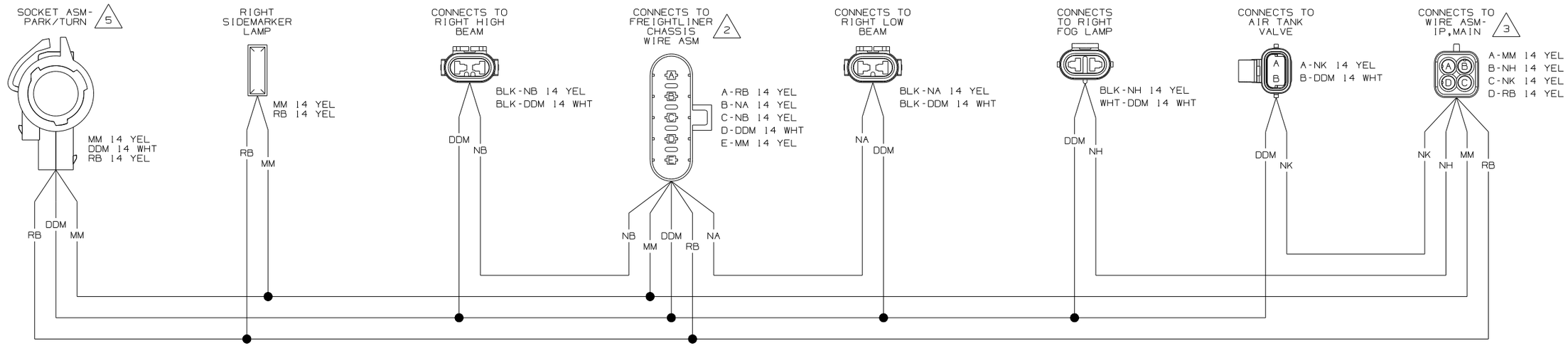

WIRING DIAGRAM-HEADLAMP,RIGHT
(WIRE ASM 144850-04 REV-G)
(WINNEBAGO & ITASCA)

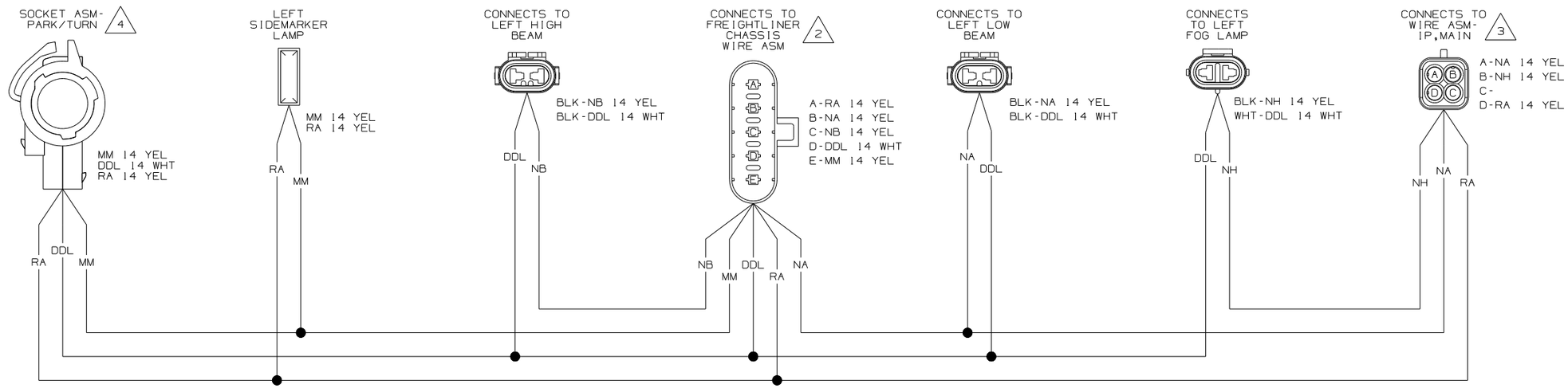

WIRING DIAGRAM-HEADLAMP,LEFT
(WIRE ASM 144850-03 REV-G)
(WINNEBAGO & ITASCA)

5 FOR CIRCUIT CONNECTIONS, SEE DETAIL AB.

4 FOR CIRCUIT CONNECTIONS, SEE DETAIL AA.

3 SEE WIRING DIAGRAM-AUTO FOR ADDITIONAL INFORMATION.

2 SEE MANUFACTURERS DIAGRAM FOR ADDITIONAL INFORMATION.

NOTES:

1. SPLICES ARE THEORETICAL AND MAY DIFFER IN THE HARNESS.

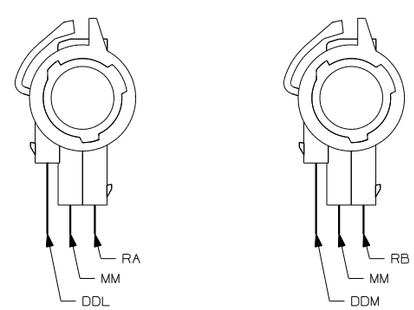

DETAIL AA

DETAIL AB

FIRST USED	06 P-SER
DO NOT SCALE DRAWING	
TITLE: WIRING DIAGRAM-AUTO LAMPS	
SHEET 2	PART NO 152119

DWG NO 152119

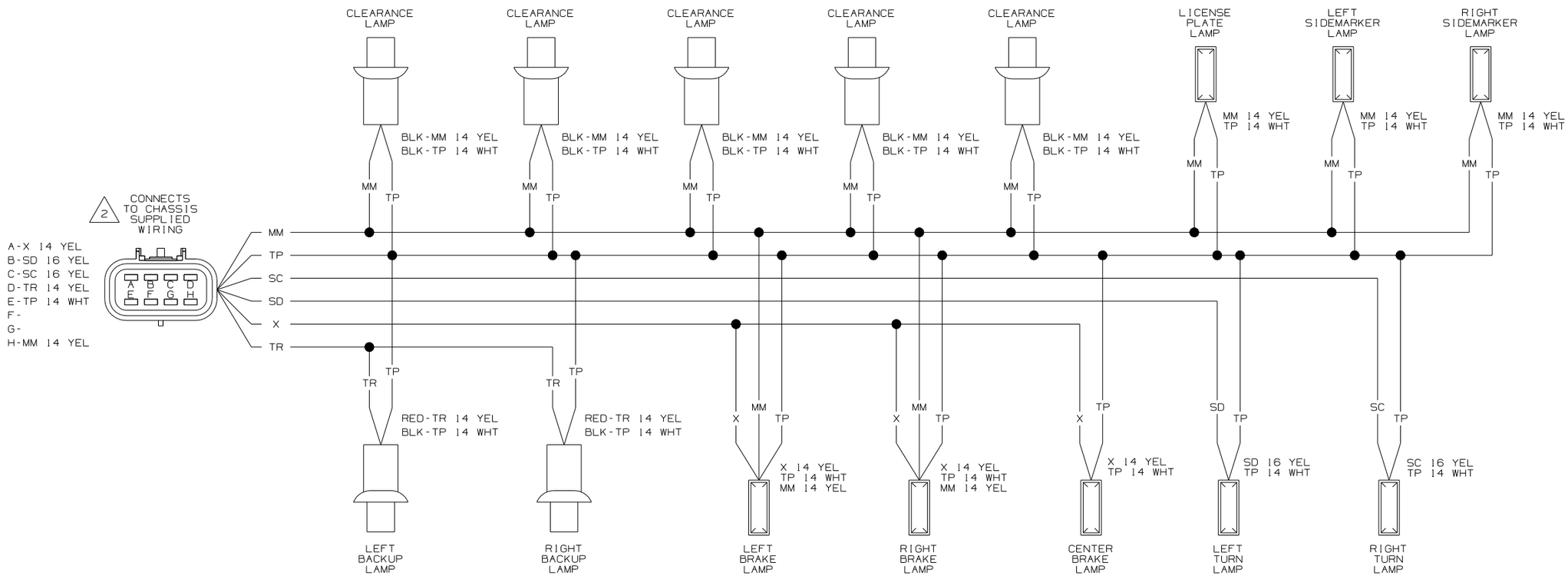

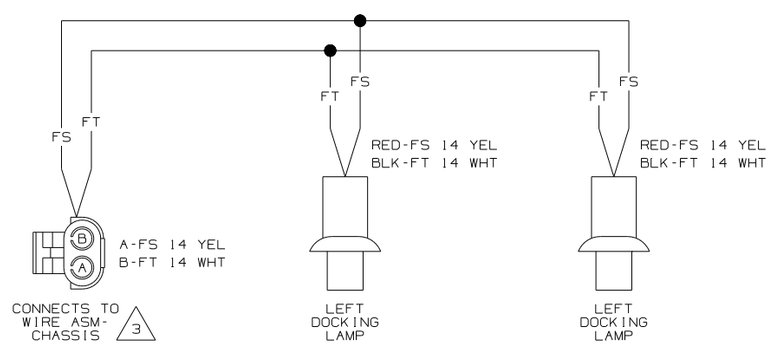

WIRING DIAGRAM-BACKWALL,FL
(WIRE ASM 146189-04 REV-G)
(ITASCA)

NOTES:

1. SPLICES ARE THEORETICAL AND MAY DIFFER IN THE HARNESS.

2. SEE MANUFACTURERS DIAGRAM FOR ADDITIONAL INFORMATION.

3. SEE WIRING DIAGRAM-BODY,12V FOR ADDITIONAL INFORMATION.

FIRST USED	06 P-SER
DO NOT SCALE DRAWING	
TITLE: WIRING DIAGRAM-AUTO LAMPS	
SHEET 3	PART NO 152119

RELEASE	REV A	DATE	DWG NO 152113

REV	ZONE	REVISION RECORD	DATE	DFTR-ORIG

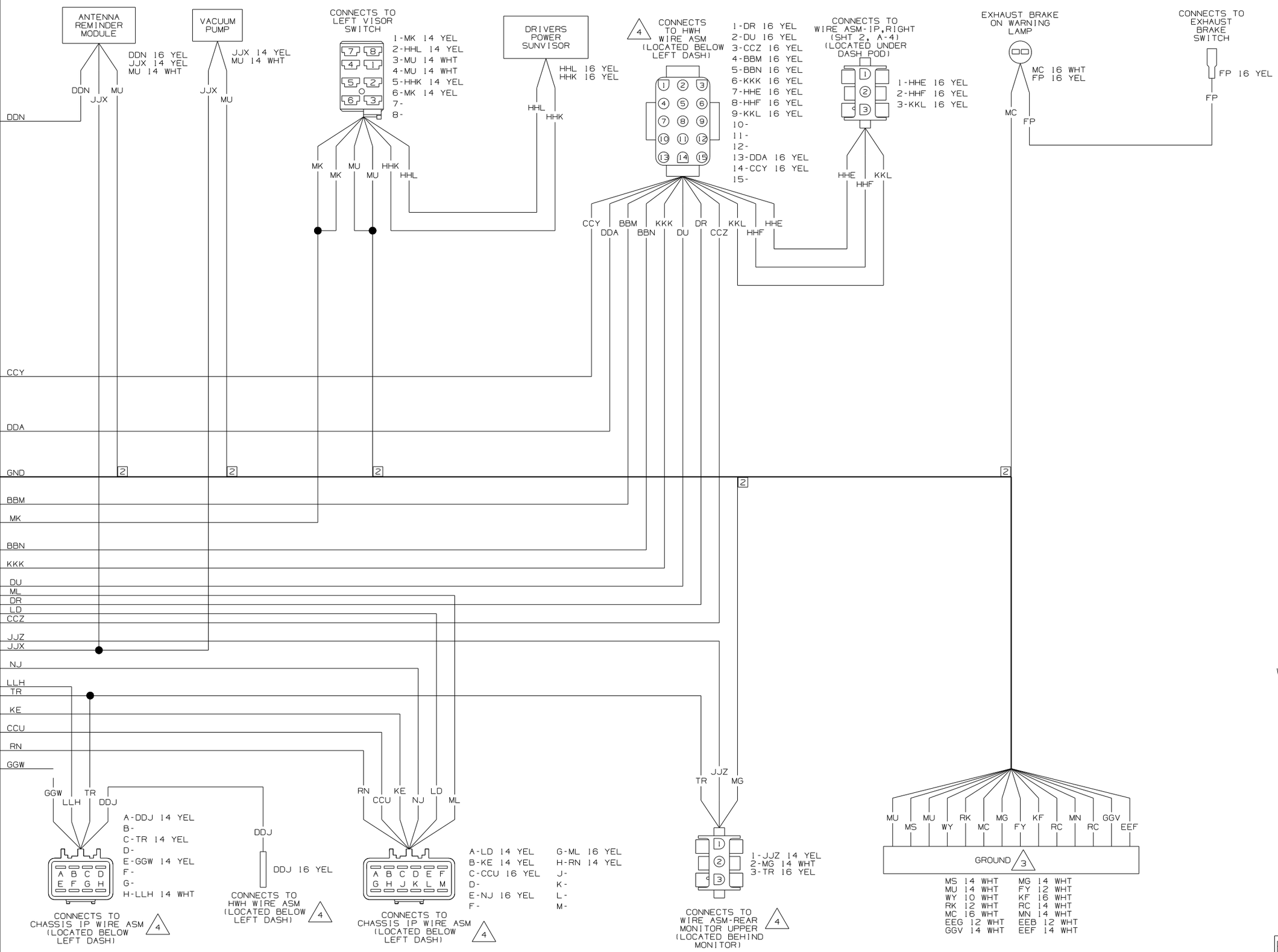

WIRING DIAGRAM IP,MAIN,FL
(WIRE ASM 153455 REV-E)

WINNEBAGO INDUSTRIES

DFTR	ORIG. DATE
CHKR	ALL DIMENSIONS ARE IN MILLIMETERS
P.E.	
M.E.	FIRST USED
DSNR	06 P-SERIES

UNSPECIFIED TOLERANCES ARE:
WHOLE DIM (X) :
ONE-PLACE (X.X) :
TWO-PLACE (X.XX) :
ANGLE :
THIRD ANGLE PROJECTION

MATERIAL:

DO NOT SCALE DRAWING

TITLE: WIRING DIAGRAM-AUTO

F1 | SHEET 1 OF 4 | PART NO 152113

REF: 1

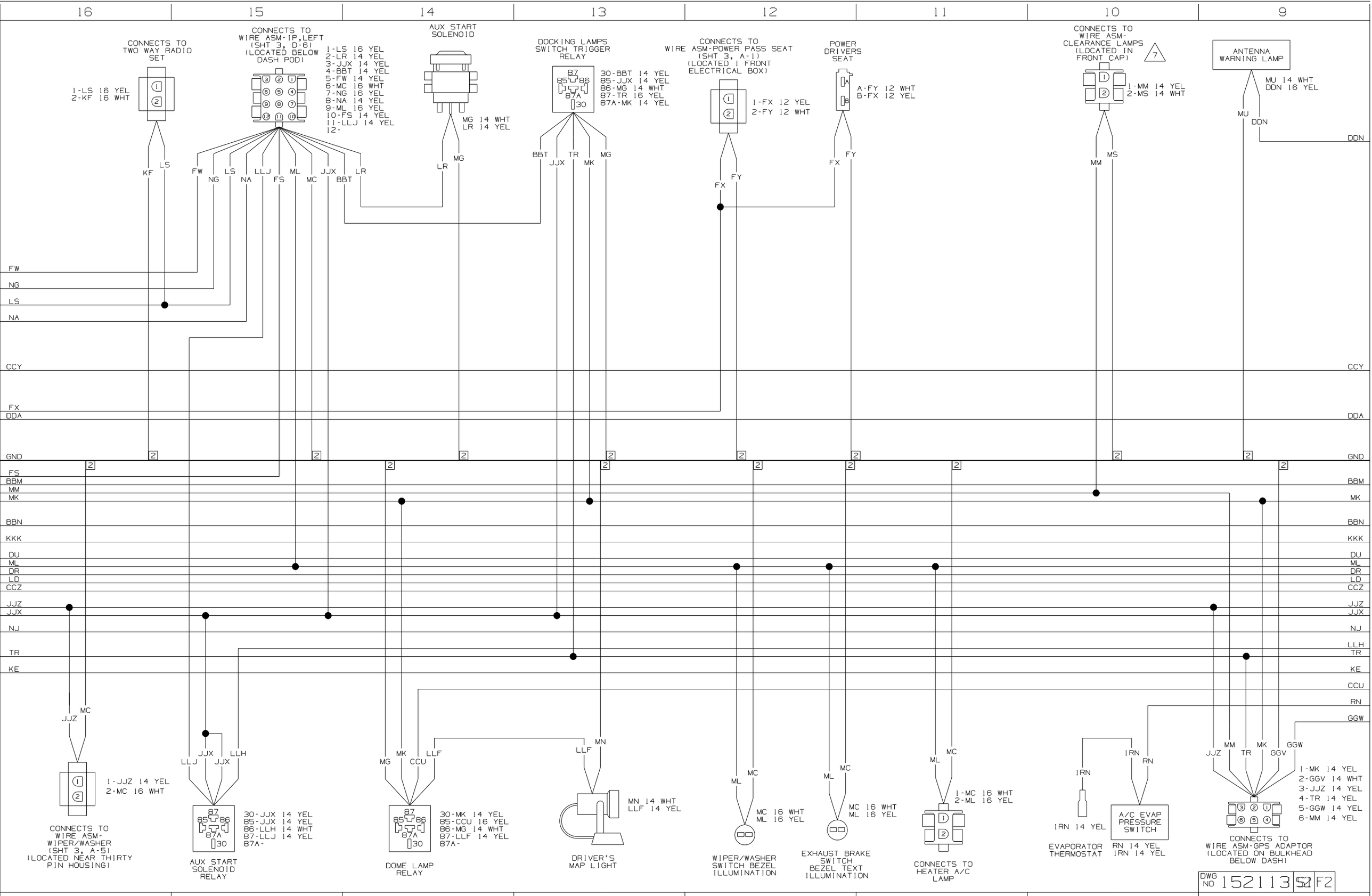
16
15
14
13
12
11
10
9
CONNECTS TO TWO WAY RADIO SET
1-LS 16 YEL
2-KF 16 WHT
CONNECTS TO WIRE ASM-IP,LEFT (SHT 3, D-6) (LOCATED BELOW DASH POD)
1-LS 16 YEL
2-LR 14 YEL
3-JJX 14 YEL
4-BBT 14 YEL
5-FW 14 YEL
6-MC 16 WHT
7-NG 16 YEL
8-NA 14 YEL
9-ML 16 YEL
10-FS 14 YEL
11-LLJ 14 YEL
12-
AUX START SOLENOID
MG 14 WHT
LR 14 YEL
DOCKING LAMPS SWITCH TRIGGER RELAY
30-BBT 14 YEL
85-JJX 14 YEL
86-MG 14 WHT
87-TR 16 YEL
87A-MK 14 YEL
CONNECTS TO WIRE ASM-POWER PASS SEAT (SHT 3, A-1) (LOCATED 1 FRONT ELECTRICAL BOX)
1-FX 12 YEL
2-FY 12 WHT
POWER DRIVERS SEAT
A-FY 12 WHT
B-FX 12 YEL
CONNECTS TO WIRE ASM-CLEARANCE LAMPS (LOCATED IN FRONT CAP)
7
1-MM 14 YEL
2-MS 14 WHT
ANTENNA WARNING LAMP
MU 14 WHT
DDN 16 YEL
KF
LS
FW
NG
LS
LLJ
FS
ML
MC
JJX
BBT
LR
LR
MG
BBT
JJX
TR
MK
MG
FX
FY
FX
FY
MM
MS
MU
DDN
DDN
FW
NG
LS
NA
CCY
FX
DDA
GND
FS
BBM
MM
MK
BBN
KKK
DU
ML
DR
LD
CCZ
JJZ
JJX
NJ
TR
KE
CCU
RN
GGW
LLH
JJZ
MC
1-JJZ 14 YEL
2-MC 16 WHT
CONNECTS TO WIRE ASM-WIPER/WASHER (SHT 3, A-5) (LOCATED NEAR THIRTY PIN HOUSING)
LLJ
JJX
JJX
LLH
30-JJX 14 YEL
85-JJX 14 YEL
86-LLH 14 WHT
87-LLJ 14 YEL
87A-
AUX START SOLENOID RELAY
MG
MK
CCU
LLF
30-MK 14 YEL
85-CCU 16 YEL
86-MG 14 WHT
87-LLF 14 YEL
87A-
DOME LAMP RELAY
LLF
MN
MN 14 WHT
LLF 14 YEL
DRIVER'S MAP LIGHT
ML
MC
MC 16 WHT
ML 16 YEL
WIPER/WASHER SWITCH BEZEL ILLUMINATION
ML
MC
MC 16 WHT
ML 16 YEL
EXHAUST BRAKE SWITCH BEZEL TEXT ILLUMINATION
ML
MC
1-MC 16 WHT
2-ML 16 YEL
CONNECTS TO HEATER A/C LAMP
IRN
IRN 14 YEL
EVAPORATOR THERMOSTAT
IRN
RN
A/C EVAP PRESSURE SWITCH
RN 14 YEL
IRN 14 YEL
JJZ
MM
TR
MK
GGV
GGW
1-MK 14 YEL
2-GGV 14 WHT
3-JJZ 14 YEL
4-TR 14 YEL
5-GGW 14 YEL
6-MM 14 YEL
CONNECTS TO WIRE ASM-GPS ADAPTOR (LOCATED ON BULKHEAD BELOW DASH)
DWG NO 152113 S1 F2
8/18/2005 18

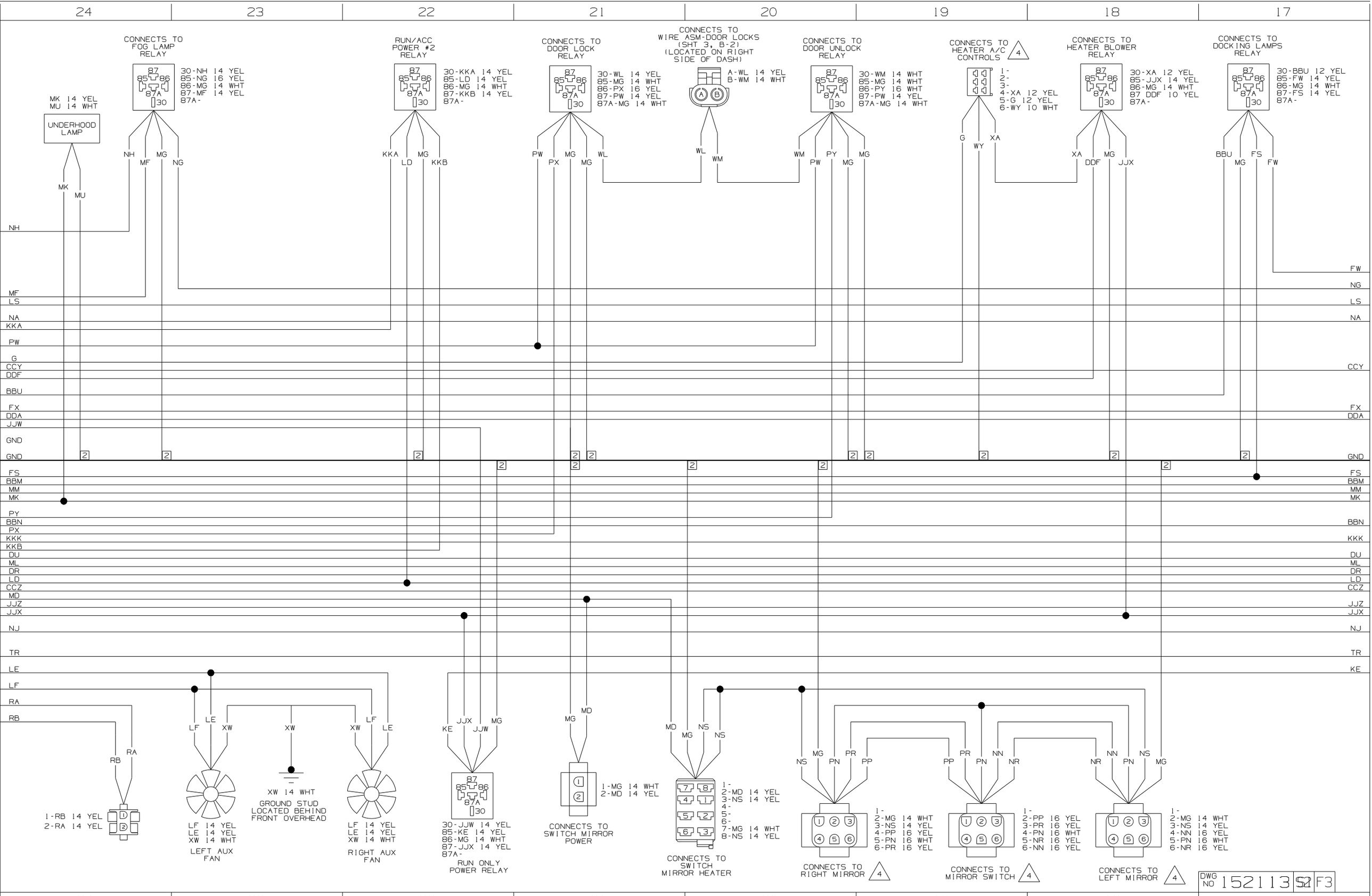
24
23
22
21
20
19
18
17
CONNECTS TO FOG LAMP RELAY
30-NH 14 YEL
85-NG 16 YEL
86-MG 14 WHT
87-MF 14 YEL
87A-
MK 14 YEL
MU 14 WHT
UNDERHOOD LAMP
RUN/ACC POWER #2 RELAY
30-KKA 14 YEL
85-LD 14 YEL
86-MG 14 WHT
87-KKB 14 YEL
87A-
CONNECTS TO DOOR LOCK RELAY
30-WL 14 YEL
85-MG 14 WHT
86-PX 16 YEL
87-PW 14 YEL
87A-MG 14 WHT
CONNECTS TO WIRE ASM-DOOR LOCKS (SHT 3, B-2) (LOCATED ON RIGHT SIDE OF DASH)
A-WL 14 YEL
B-WM 14 WHT
CONNECTS TO DOOR UNLOCK RELAY
30-WM 14 WHT
85-MG 14 WHT
86-PY 16 WHT
87-PW 14 YEL
87A-MG 14 WHT
CONNECTS TO HEATER A/C CONTROLS
1-
2-
3-
4-XA 12 YEL
5-G 12 YEL
6-WY 10 WHT
CONNECTS TO HEATER BLOWER RELAY
30-XA 12 YEL
85-JJX 14 YEL
86-MG 14 WHT
87 DDF 10 YEL
87A-
CONNECTS TO DOCKING LAMPS RELAY
30-BBU 12 YEL
85-FW 14 YEL
86-MG 14 WHT
87-FS 14 YEL
87A-
1-RB 14 YEL
2-RA 14 YEL
LF 14 YEL
LE 14 YEL
XW 14 WHT
LEFT AUX FAN
XW 14 WHT
GROUND STUD LOCATED BEHIND FRONT OVERHEAD
LF 14 YEL
LE 14 YEL
XW 14 WHT
RIGHT AUX FAN
30-JJW 14 YEL
85-KE 14 YEL
86-MG 14 WHT
87-JJX 14 YEL
87A-
RUN ONLY POWER RELAY
1-MG 14 WHT
2-MD 14 YEL
CONNECTS TO SWITCH MIRROR POWER
1-
2-MD 14 YEL
3-NS 14 YEL
4-
5-
6-
7-MG 14 WHT
8-NS 14 YEL
CONNECTS TO SWITCH MIRROR HEATER
1-
2-MG 14 WHT
3-NS 14 YEL
4-PP 16 YEL
5-PN 16 WHT
6-PR 16 YEL
CONNECTS TO RIGHT MIRROR
1-
2-PP 16 YEL
3-PR 16 YEL
4-PN 16 WHT
5-NR 16 YEL
6-NN 16 YEL
CONNECTS TO MIRROR SWITCH
1-
2-MG 14 WHT
3-NS 14 YEL
4-NN 16 YEL
5-PN 16 WHT
6-NR 16 YEL
CONNECTS TO LEFT MIRROR
DWG NO 152113 S1 F3
8/18/2005

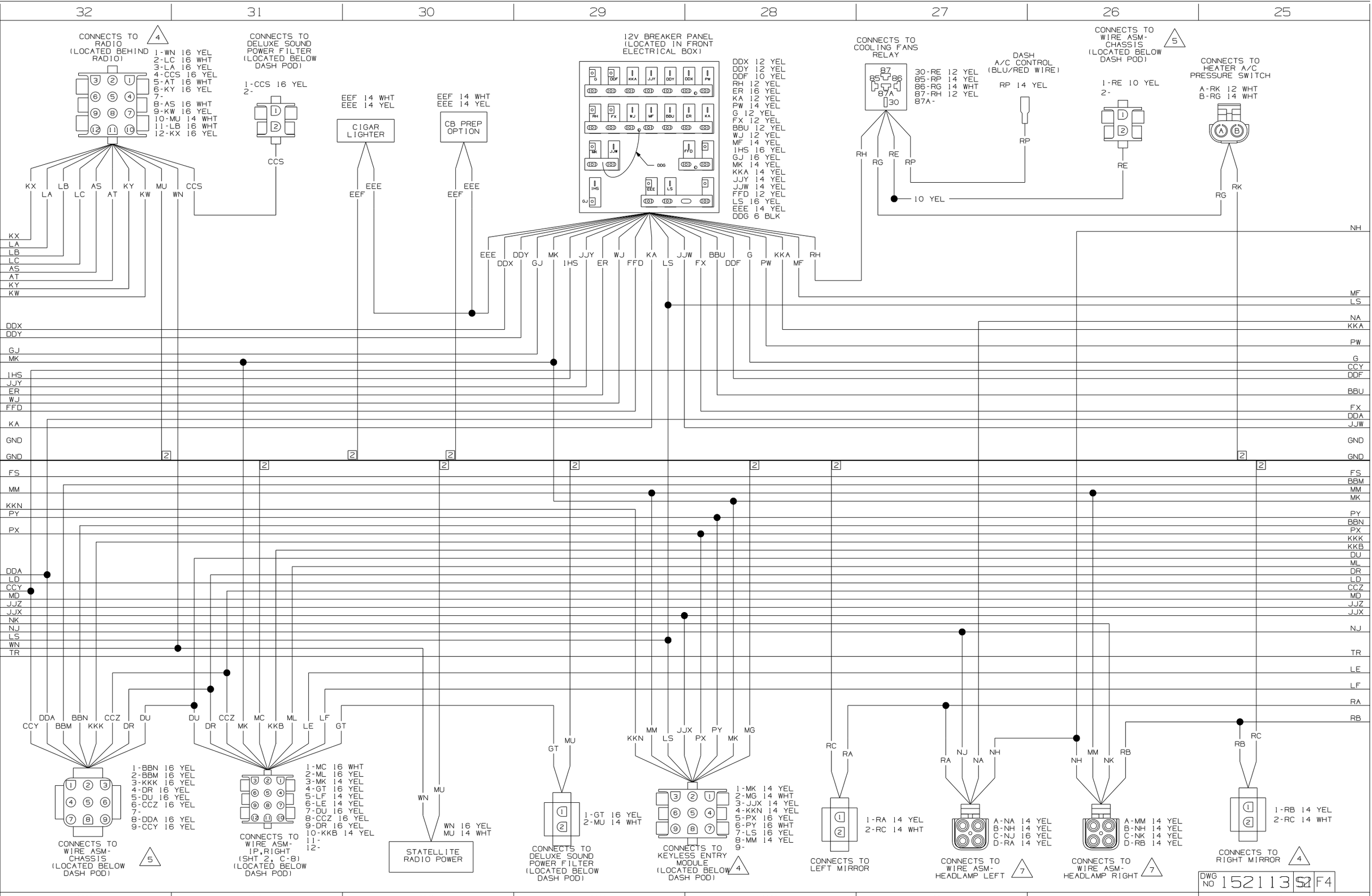
32
31
30
29
28
27
26
25
CONNECTS TO RADIO (LOCATED BEHIND RADIO)
4
1-WN 16 YEL
2-LC 16 WHT
3-LA 16 YEL
4-CCS 16 YEL
5-AT 16 WHT
6-KY 16 YEL
7-
8-AS 16 WHT
9-KW 16 YEL
10-MU 14 WHT
11-LB 16 WHT
12-KX 16 YEL
CONNECTS TO DELUXE SOUND POWER FILTER (LOCATED BELOW DASH POD)
1-CCS 16 YEL
2-
CCS
EEF 14 WHT
EEE 14 YEL
CIGAR LIGHTER
EEF 14 WHT
EEE 14 YEL
CB PREP OPTION
12V BREAKER PANEL (LOCATED IN FRONT ELECTRICAL BOX)
DDX 12 YEL
DDY 12 YEL
DDF 10 YEL
RH 12 YEL
ER 16 YEL
KA 12 YEL
PW 14 YEL
G 12 YEL
FX 12 YEL
BBU 12 YEL
WJ 12 YEL
MF 14 YEL
IHS 16 YEL
GJ 16 YEL
MK 14 YEL
KKA 14 YEL
JJY 14 YEL
JJW 14 YEL
FFD 12 YEL
LS 16 YEL
EEE 14 YEL
DDG 6 BLK
CONNECTS TO COOLING FANS RELAY
30-RE 12 YEL
85-RP 14 YEL
86-RG 14 WHT
87-RH 12 YEL
87A-
DASH A/C CONTROL (BLU/RED WIRE)
RP 14 YEL
CONNECTS TO WIRE ASM-CHASSIS (LOCATED BELOW DASH POD)
5
1-RE 10 YEL
2-
CONNECTS TO HEATER A/C PRESSURE SWITCH
A-RK 12 WHT
B-RG 14 WHT
10 YEL
CONNECTS TO WIRE ASM-CHASSIS (LOCATED BELOW DASH POD)
5
1-BBN 16 YEL
2-BBM 16 YEL
3-KKK 16 YEL
4-DR 16 YEL
5-DU 16 YEL
6-CCZ 16 YEL
7-
8-DDA 16 YEL
9-CCY 16 YEL
CONNECTS TO WIRE ASM-IP,RIGHT (SHT 2, C-8) (LOCATED BELOW DASH POD)
1-MC 16 WHT
2-ML 16 YEL
3-MK 14 YEL
4-GT 16 YEL
5-LF 14 YEL
6-LE 14 YEL
7-DU 16 YEL
8-CCZ 16 YEL
9-DR 16 YEL
10-KKB 14 YEL
11-
12-
WN 16 YEL
MU 14 WHT
STATELLITE RADIO POWER
1-GT 16 YEL
2-MU 14 WHT
CONNECTS TO DELUXE SOUND POWER FILTER (LOCATED BELOW DASH POD)
1-MK 14 YEL
2-MG 14 WHT
3-JJX 14 YEL
4-KKN 14 YEL
5-PX 16 YEL
6-PY 16 WHT
7-LS 16 YEL
8-MM 14 YEL
9-
CONNECTS TO KEYLESS ENTRY MODULE (LOCATED BELOW DASH POD)
4
1-RA 14 YEL
2-RC 14 WHT
CONNECTS TO LEFT MIRROR
A-NA 14 YEL
B-NH 14 YEL
C-NJ 16 YEL
D-RA 14 YEL
CONNECTS TO WIRE ASM-HEADLAMP LEFT
7
A-MM 14 YEL
B-NH 14 YEL
C-NK 14 YEL
D-RB 14 YEL
CONNECTS TO WIRE ASM-HEADLAMP RIGHT
7
1-RB 14 YEL
2-RC 14 WHT
CONNECTS TO RIGHT MIRROR
4
DWG NO 152113 SH 1 F4
8/18/2005 20

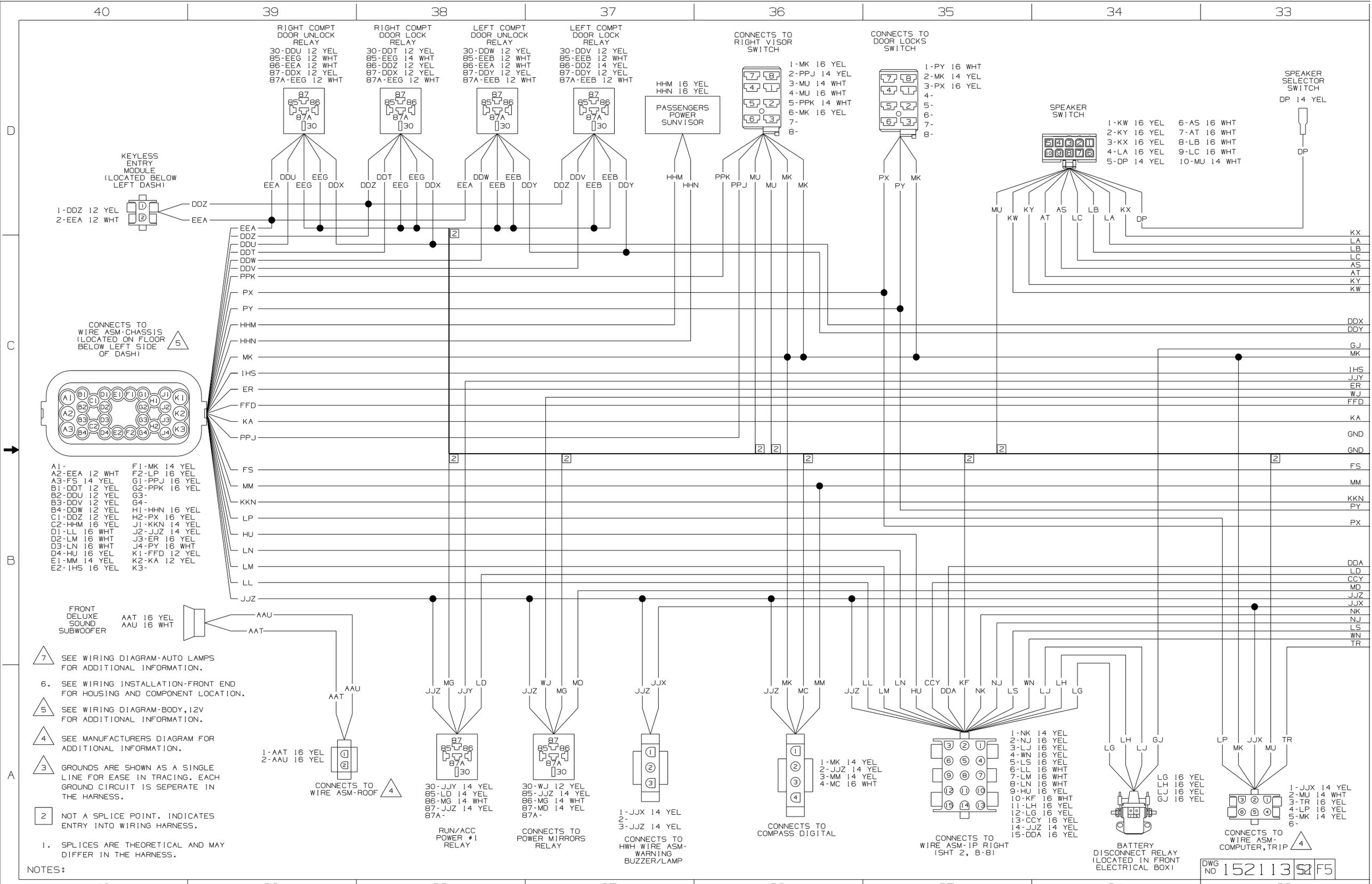
RIGHT COMPT DOOR UNLOCK RELAY
30-DDU 12 YEL
85-EEG 12 WHT
86-EEA 12 WHT
87-DDX 12 YEL
87A-EEG 12 WHT
RIGHT COMPT DOOR LOCK RELAY
30-DDT 12 YEL
85-EEG 14 WHT
86-DDZ 12 YEL
87-DDX 12 YEL
87A-EEG 12 WHT
LEFT COMPT DOOR UNLOCK RELAY
30-DDW 12 YEL
85-EEB 12 WHT
86-EEA 12 WHT
87-DDY 12 YEL
87A-EEB 12 WHT
LEFT COMPT DOOR LOCK RELAY
30-DDV 12 YEL
85-EEB 12 WHT
86-DDZ 14 YEL
87-DDY 12 YEL
87A-EEB 12 WHT
HHM 16 YEL
HHN 16 YEL
PASSENGERS POWER SUNVISOR
CONNECTS TO RIGHT VISOR SWITCH
1-MK 16 YEL
2-PPJ 14 YEL
3-MU 14 WHT
4-MU 16 WHT
5-PPK 14 WHT
6-MK 16 YEL
7-
8-
CONNECTS TO DOOR LOCKS SWITCH
1-PY 16 WHT
2-MK 14 YEL
3-PX 16 YEL
4-
5-
6-
7-
8-
SPEAKER SELECTOR SWITCH
DP 14 YEL
SPEAKER SWITCH
1-KW 16 YEL
2-KY 16 YEL
3-KX 16 YEL
4-LA 16 YEL
5-DP 14 YEL
6-AS 16 WHT
7-AT 16 WHT
8-LB 16 WHT
9-LC 16 WHT
10-MU 14 WHT
KEYLESS ENTRY MODULE (LOCATED BELOW LEFT DASH)
1-DDZ 12 YEL
2-EEA 12 WHT
CONNECTS TO WIRE ASM-CHASSIS (LOCATED ON FLOOR BELOW LEFT SIDE OF DASH)
A1-
A2-EEA 12 WHT
A3-FS 14 YEL
B1-DDT 12 YEL
B2-DDU 12 YEL
B3-DDV 12 YEL
B4-DDW 12 YEL
C1-DDZ 12 YEL
C2-HHM 16 YEL
D1-LL 16 WHT
D2-LM 16 WHT
D3-LN 16 WHT
D4-HU 16 YEL
E1-MM 14 YEL
E2-IHS 16 YEL
F1-MK 14 YEL
F2-LP 16 YEL
G1-PPJ 16 YEL
G2-PPK 16 YEL
G3-
G4-
H1-HHN 16 YEL
H2-PX 16 YEL
J1-KKN 14 YEL
J2-JJZ 14 YEL
J3-ER 16 YEL
J4-PY 16 WHT
K1-FFD 12 YEL
K2-KA 12 YEL
K3-
FRONT DELUXE SOUND SUBWOOFER
AAT 16 YEL
AAU 16 WHT
1-AAT 16 YEL
2-AAU 16 YEL
CONNECTS TO WIRE ASM-ROOF
30-JJY 14 YEL
85-LD 14 YEL
86-MG 14 WHT
87-JJZ 14 YEL
87A-
RUN/ACC POWER #1 RELAY
30-WJ 12 YEL
85-JJZ 14 YEL
86-MG 14 WHT
87-MD 14 YEL
87A-
CONNECTS TO POWER MIRRORS RELAY
1-JJX 14 YEL
2-
3-JJZ 14 YEL
CONNECTS TO HWH WIRE ASM-WARNING BUZZER/LAMP
1-MK 14 YEL
2-JJZ 14 YEL
3-MM 14 YEL
4-MC 16 WHT
CONNECTS TO COMPASS DIGITAL
1-NK 14 YEL
2-NJ 16 YEL
3-LJ 16 YEL
4-WN 16 YEL
5-LS 16 YEL
6-LL 16 WHT
7-LM 16 WHT
8-LN 16 WHT
9-HU 16 YEL
10-KF 16 WHT
11-LH 16 YEL
12-LG 16 YEL
13-CCY 16 YEL
14-JJZ 14 YEL
15-DDA 16 YEL
CONNECTS TO WIRE ASM-IP RIGHT (SHT 2, B-8)
LG 16 YEL
LH 16 YEL
LJ 16 YEL
GJ 16 YEL
BATTERY DISCONNECT RELAY (LOCATED IN FRONT ELECTRICAL BOX)
1-JJX 14 YEL
2-MU 14 WHT
3-TR 16 YEL
4-LP 16 YEL
5-MK 14 YEL
6-
CONNECTS TO WIRE ASM-COMPUTER,TRIP
7 SEE WIRING DIAGRAM-AUTO LAMPS FOR ADDITIONAL INFORMATION.
6. SEE WIRING INSTALLATION-FRONT END FOR HOUSING AND COMPONENT LOCATION.
5 SEE WIRING DIAGRAM-BODY,12V FOR ADDITIONAL INFORMATION.
4 SEE MANUFACTURERS DIAGRAM FOR ADDITIONAL INFORMATION.
3 GROUNDS ARE SHOWN AS A SINGLE LINE FOR EASE IN TRACING. EACH GROUND CIRCUIT IS SEPERATE IN THE HARNESS.
2 NOT A SPLICE POINT. INDICATES ENTRY INTO WIRING HARNESS.
1. SPLICES ARE THEORETICAL AND MAY DIFFER IN THE HARNESS.
NOTES:
DWG NO 152113 SH 2 F5

DWG NO 152113

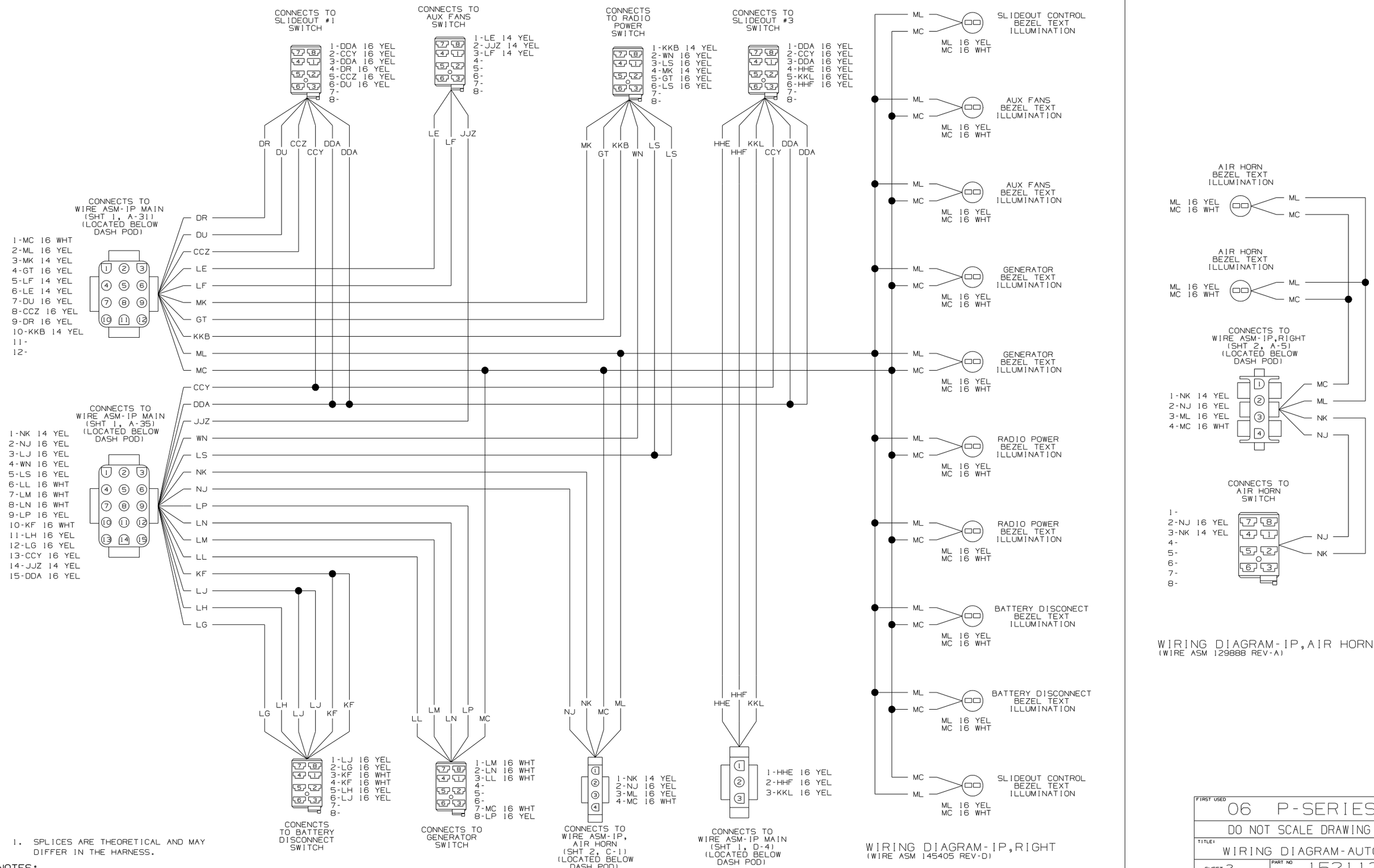

1. SPLICES ARE THEORETICAL AND MAY DIFFER IN THE HARNESS.

NOTES:

FIRST USED	06 P-SERIES
	DO NOT SCALE DRAWING
TITLE:	WIRING DIAGRAM-AUTO
SHEET 2	PART NO 152113

DWG NO 152113

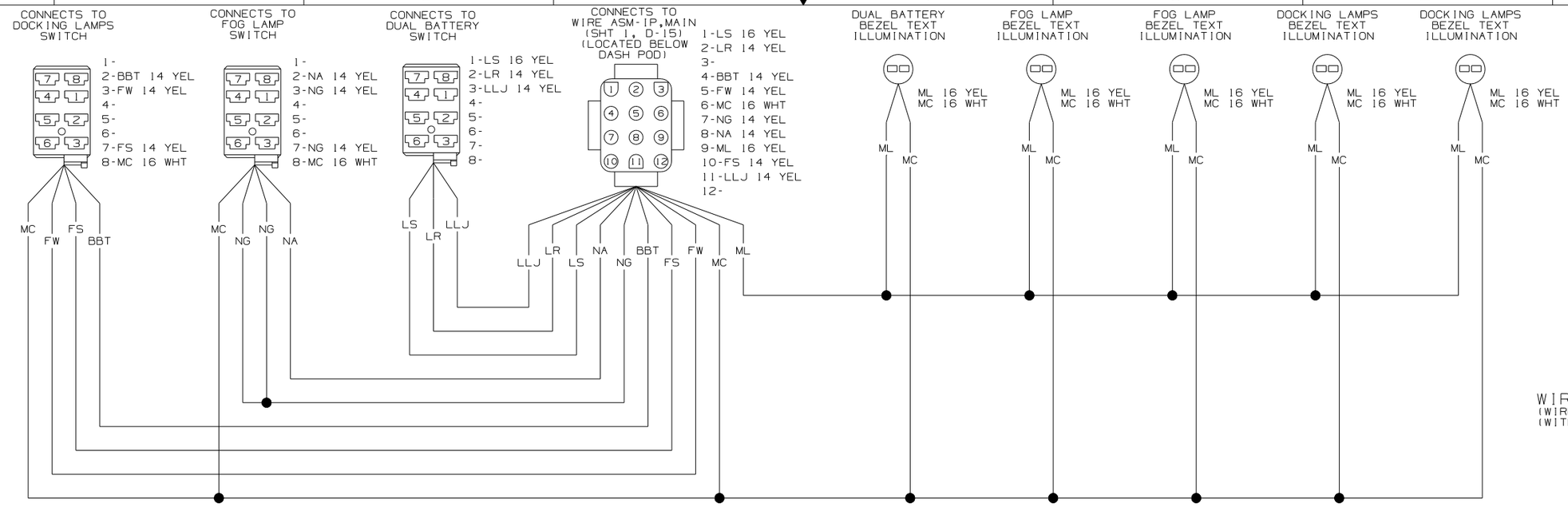

WIRING DIAGRAM-IP,LEFT
(WIRE ASM 141852-02 REV-C)
(WITH FREIGHTLINER MMDC WIRING)

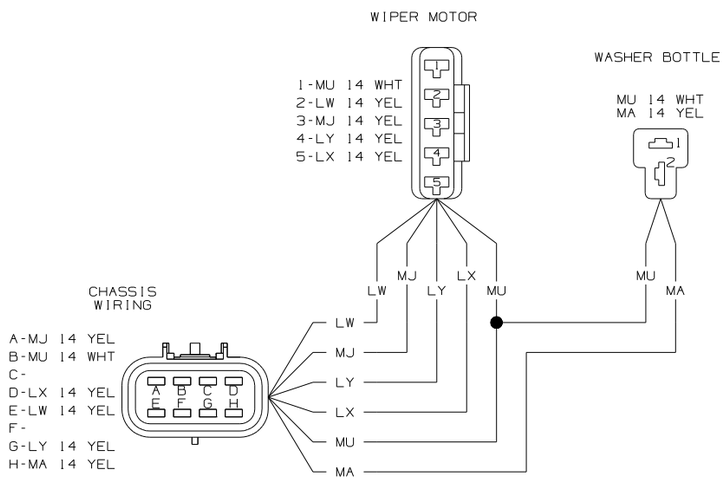

WIRING DIAGRAM-WIPER/WASHER
(WIRE ASM 14149214-02 REV-F)

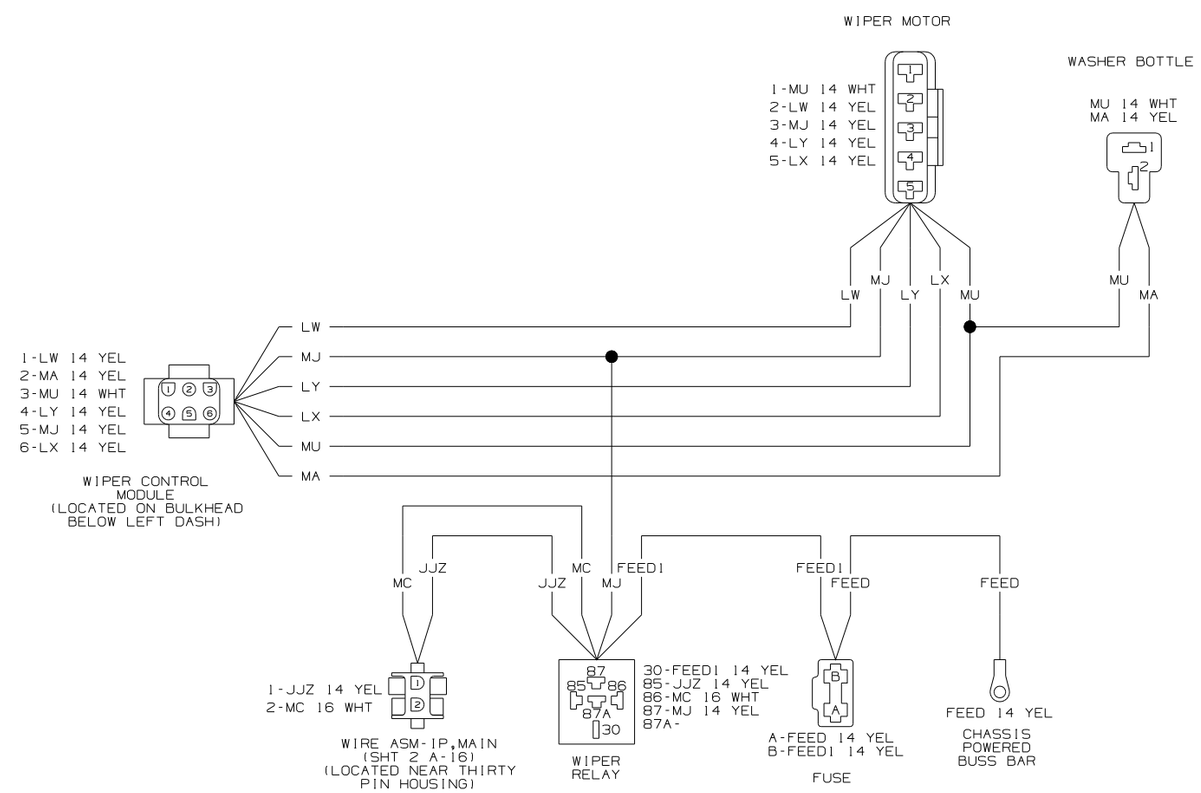

WIRING DIAGRAM-WIPER/WASHER
(WIRE ASM 14149214-03 REV-F)

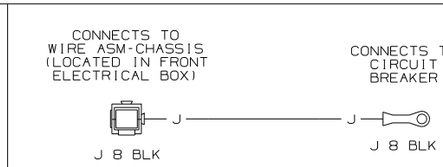

WIRING DIAGRAM-CRT BRK,POWER
(WIRE ASM 103991-01 REV-G)

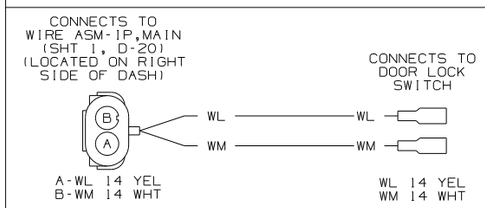

WIRING DIAGRAM-DOOR LOCK
(WIRE ASM 132267 REV-C)

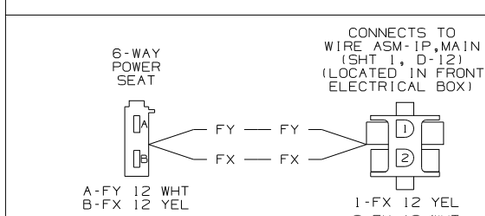

WIRING DIAGRAM-POWER DRIVER SEAT
(WIRE ASM 108029-05 REV-M)

FIRST USED	06 P-SERIES
	DO NOT SCALE DRAWING
TITLE:	WIRING DIAGRAM-AUTO
SHEET 3	PART NO 152113

DWG NO 152113

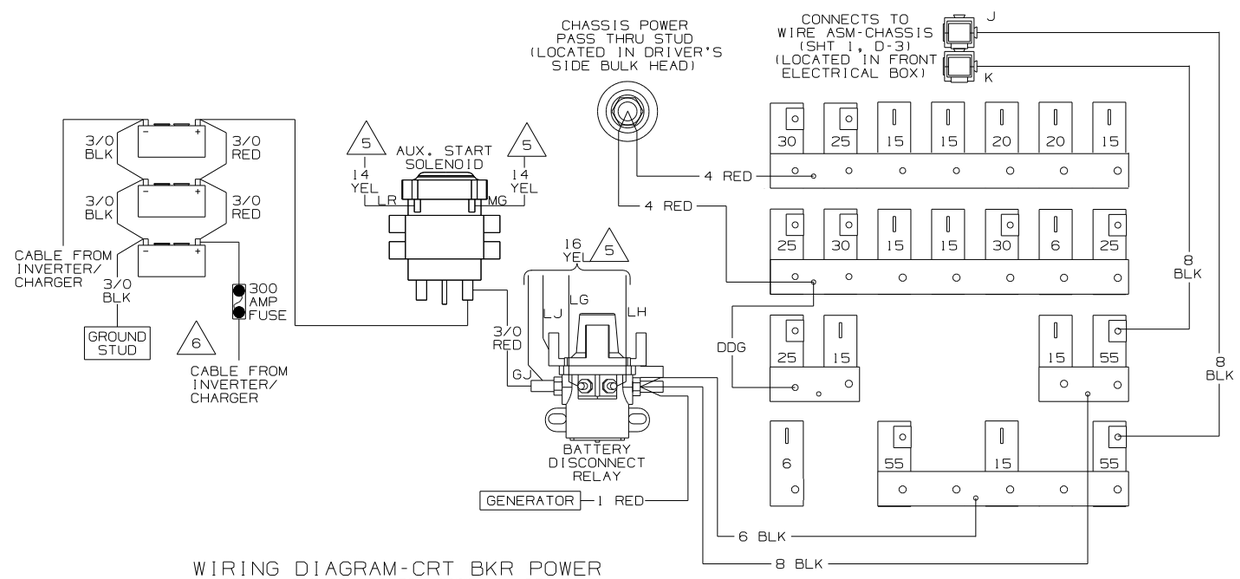

WIRING DIAGRAM-CRT BKR POWER
(WIRE ASM CRT BRK,POWER 103991-01 REV-G)
WIRE ASM COACH BKR FEED 103752-06-000 REV E)

1 SEE WIRING DIAGRAM-BODY,12V FOR ADDITIONAL INFORMATION

NOTES:

FIRST USED 06 P-SERIES	
DO NOT SCALE DRAWING	
TITLE: WIRING DIAGRAM-AUTO	
SHEET 4	PART NO 152113

RELEASE	REV A	DATE	DWG NO 152128
REV	ZONE	REVISION RECORD	DATE / DFTR-ORIG

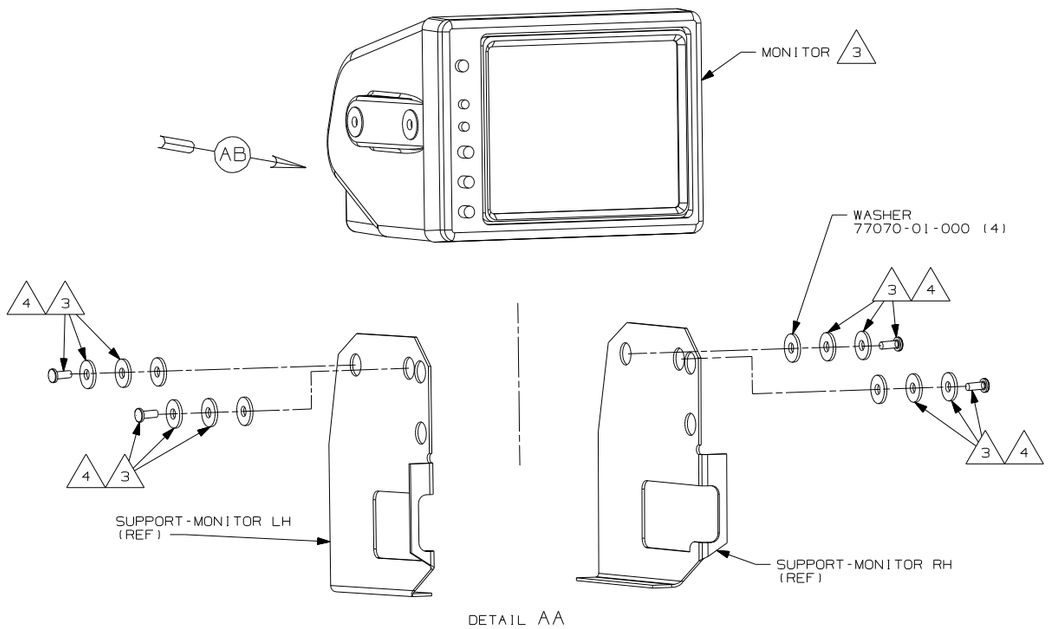

DETAIL AA

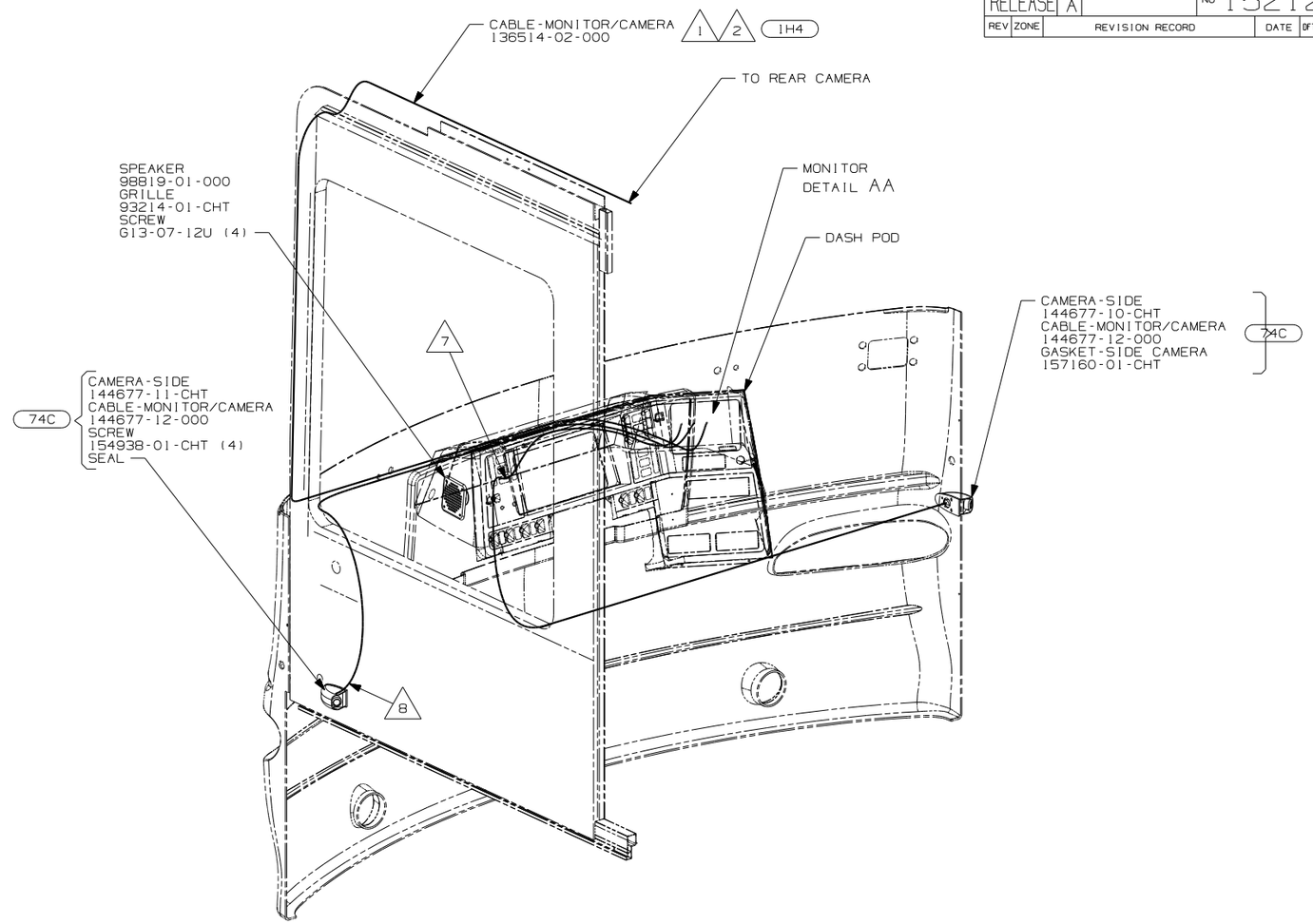

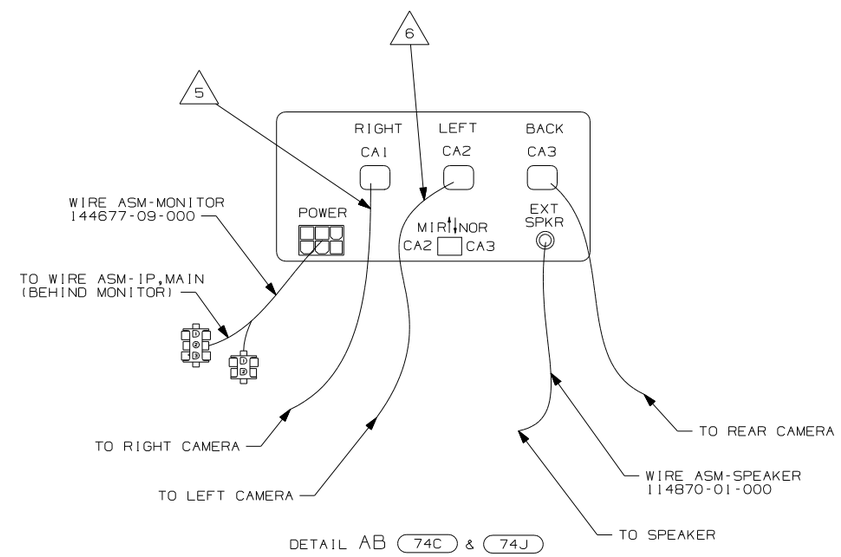

DETAIL AB 74C & 74J

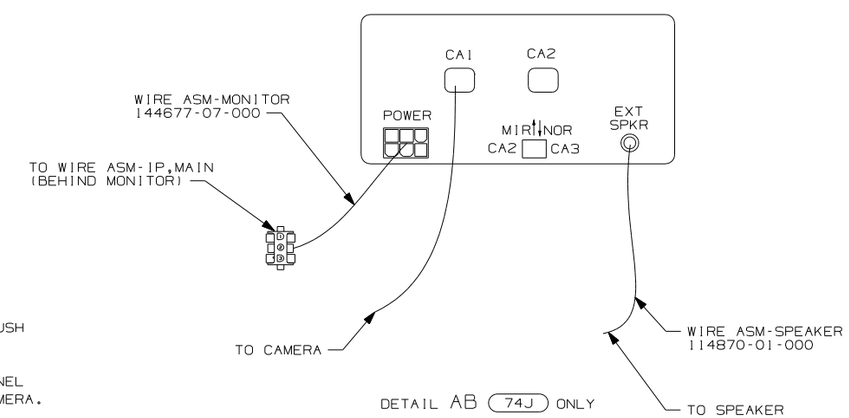

DETAIL AB 74J ONLY

74J REARVIEW MONITOR SYS W/AUDIO
74C VIDEO CAMERA SYSTEM
1H4 REARVIEW MONITOR-WIRE PREP
1A5 REARVIEW MONITOR SYSTEM W/O

NOTES:

4. PARTS SUPPLIED WITH MONITOR P/N 144677-08-000 74J & 74C
3. PARTS SUPPLIED WITH MONITOR P/N 144677-06-000 74J ONLY.
2. 1A5 OR 1H4 END STANDARD CABLE BEHIND REAR CAP (SHT 2) ON UNITS WITHOUT MONITOR & COIL UNDER DASH POD BEHIND MONITOR POCKET.
1. RUN CABLE THRU LEFT HAND COVE TO FRONT OF UNIT AND DOWN LEFT A-PILLAR TO MONITOR
8. CONNECT CAMERA THRU HOLE IN SIDEWALL, PUSH CONNECTOR BACK THRU SIDEWALL AND SEAL.
7. ROUTE CABLE TO EXTERIOR THRU HOLE IN PANEL ALONG WITH WIRE ASM-IP,MAIN TO RIGHT CAMERA.
6. MARK LEFT CABLE WITH YELLOW TAPE 900000-07-000 NEXT TO CONNECTOR.
5. MARK RIGHT CABLE WITH WHITE TAPE 900000-08-000 NEXT TO CONNECTOR.

DFTR	ORIG. DATE
CHKR	ALL DIMENSIONS ARE IN MILLIMETERS
P.E.	
M.E.	FIRST USED
DSNR	06 P-SERIES
UNSPECIFIED TOLERANCES ARE: WHOLE DIM (X) : ONE-PLACE (X.X) : TWO-PLACE (X.XX) : ANGLE :	MATERIAL:
THIRD ANGLE PROJECTION	

DO NOT SCALE DRAWING

TITLE: MONITOR INSTL

SHEET 1 OF 2 | PART NO 152128

REF: 1 8/10/2005

DWG NO 152128

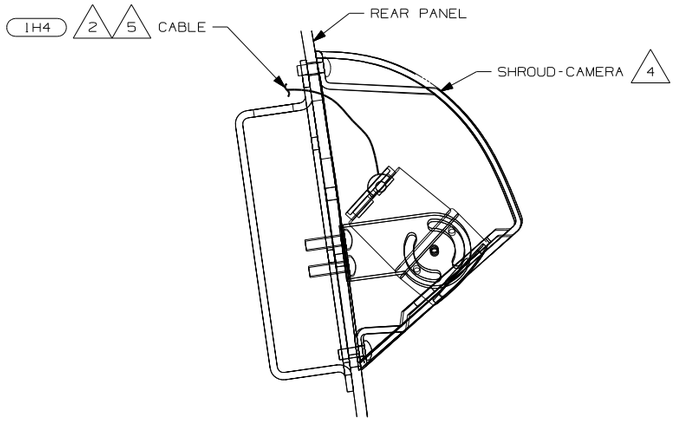

SECTION BA-BA

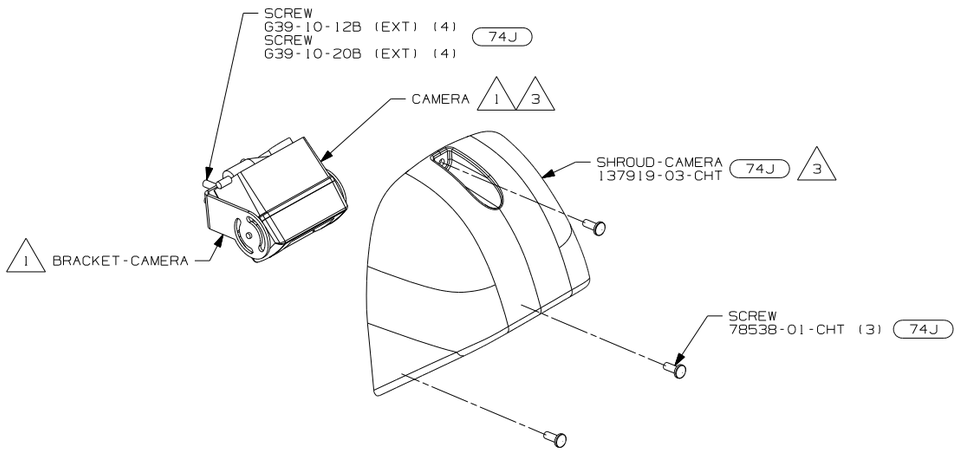

DETAIL BB

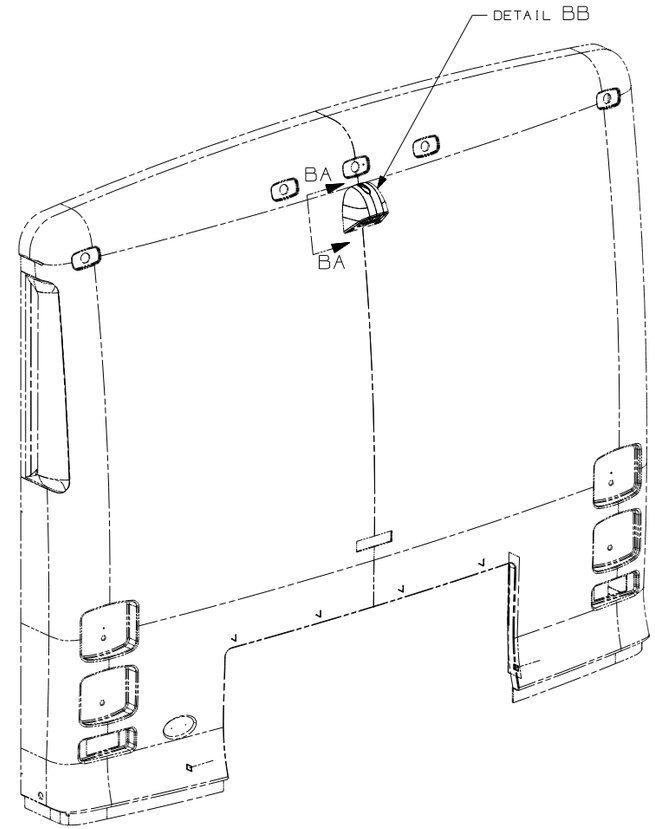

NOTES:

5 1A5 OR 1H4 END STANDARD CABLE IN THIS AREA ON UNITS WITHOUT MONITOR.

4 SEE PANEL-REAR CAP FOR LOCATION.

3 ALIGN CAMERA IN CENTER OF SHROUD OPENING

2 RUN CABLE THRU LEFT HAND COVE TO FRONT OF UNIT AND DOWN LEFT A-PILLAR TO MONITOR

1 PARTS SUPPLIED WITH REAR CAMERA 144677-04-000. 74J

74J REAR VIEW MONITOR SYSTEM

1H4 REAR VIEW MONITOR-WIRE PREP

1A5 REARVIEW MONITOR SYSTEM W/O

FIRST USED	06 P-SERIES
	DO NOT SCALE DRAWING
TITLE:	MONITOR INSTL
SHEET 2	PART NO 152128

RELEASE	REV A	DATE	DWG NO 154215
REV	ZONE	REVISION RECORD	DATE	DFTR-ORIG

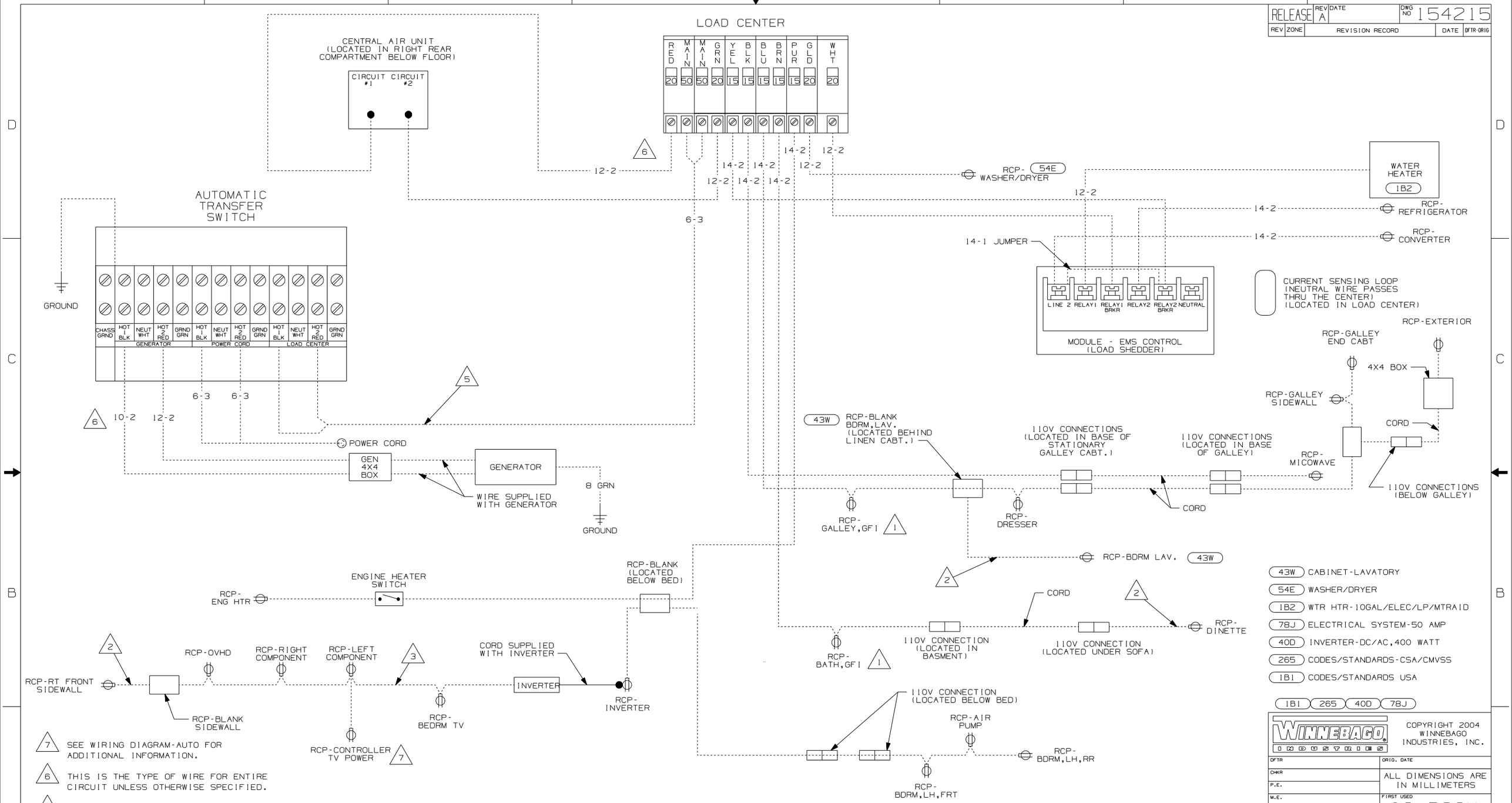

7 SEE WIRING DIAGRAM-AUTO FOR ADDITIONAL INFORMATION.

6 THIS IS THE TYPE OF WIRE FOR ENTIRE CIRCUIT UNLESS OTHERWISE SPECIFIED.

5 6-3 WITH 6500 WATT GENERATOR
4-3 WTH 7500 WATT GENERATOR

4 WIRE ROUTED THROUGH FLOOR.

3 WIRE ROUTED IN ROOF.

2 WIRE ROUTED IN SIDEWALL.

1 ALL OUTLETS DOWN STREAM AND INCLUDING THIS OUTLET ARE GROUND FAULT INTERUPT PROTECTED.

NOTES:

DFTR	ORIG. DATE
CHKR	ALL DIMENSIONS ARE IN MILLIMETERS
P.E.	
M.E.	FIRST USED 06 P39K
DSNR	

UNSPECIFIED TOLERANCES ARE:
WHOLE DIM (X) :
ONE-PLACE (X.X) :
TWO-PLACE (X.XX) :
ANGLE :
THIRD ANGLE PROJECTION

MATERIAL:

DO NOT SCALE DRAWING

TITLE: WIRING DIAGRAM-BODY,110V

SHEET 1 OF 2 | PART NO 154215

DWG NO 154215

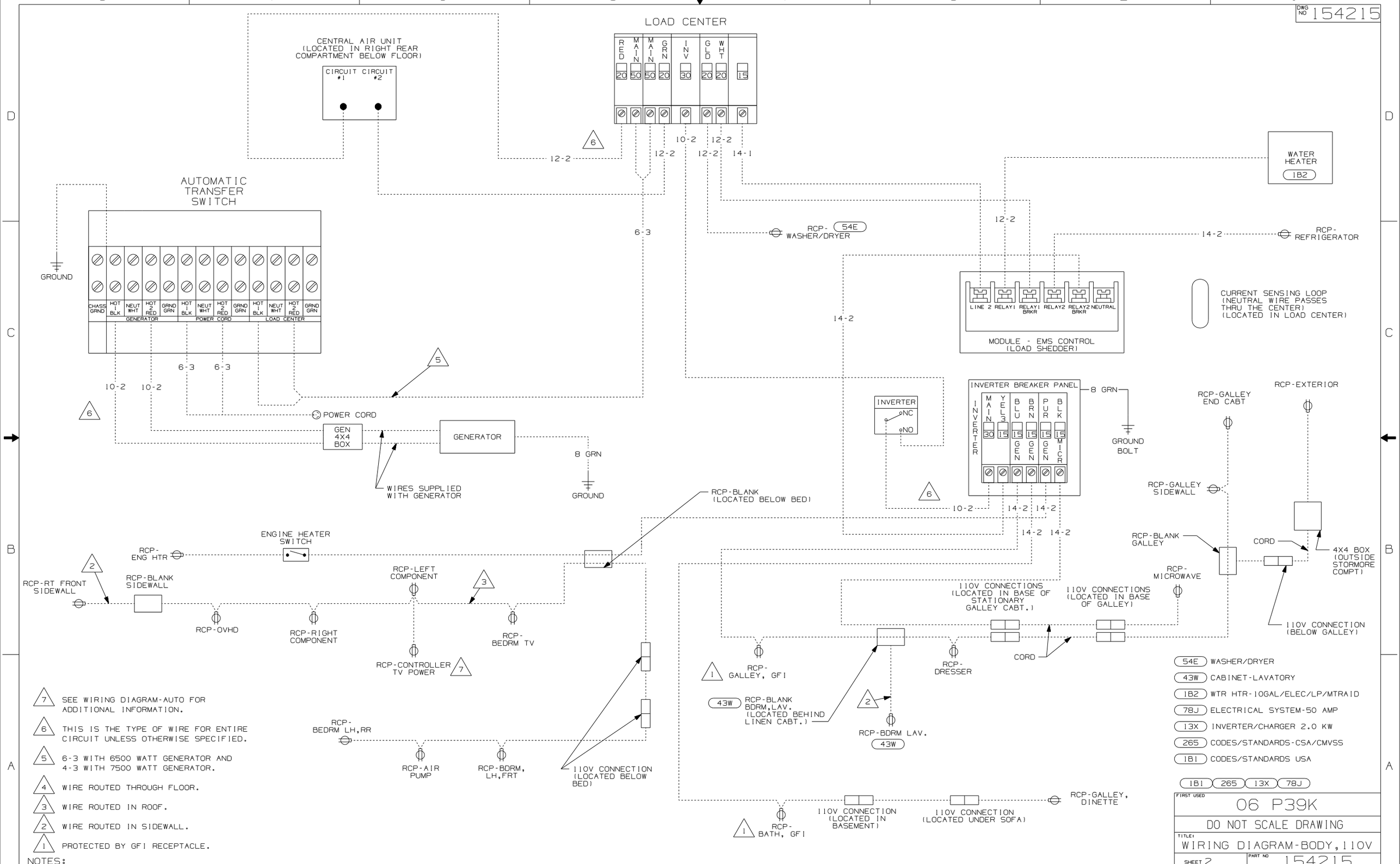

DRAWING NO.	FEATURE
154197-12	1B1 78J
154197-14	1B1 78J 13X
154197-16	265 78J
154197-18	265 78J 13X

RELEASE	REV A	DATE	DWG NO 154197
REV	ZONE	REVISION RECORD	DATE / DFTR-ORIG

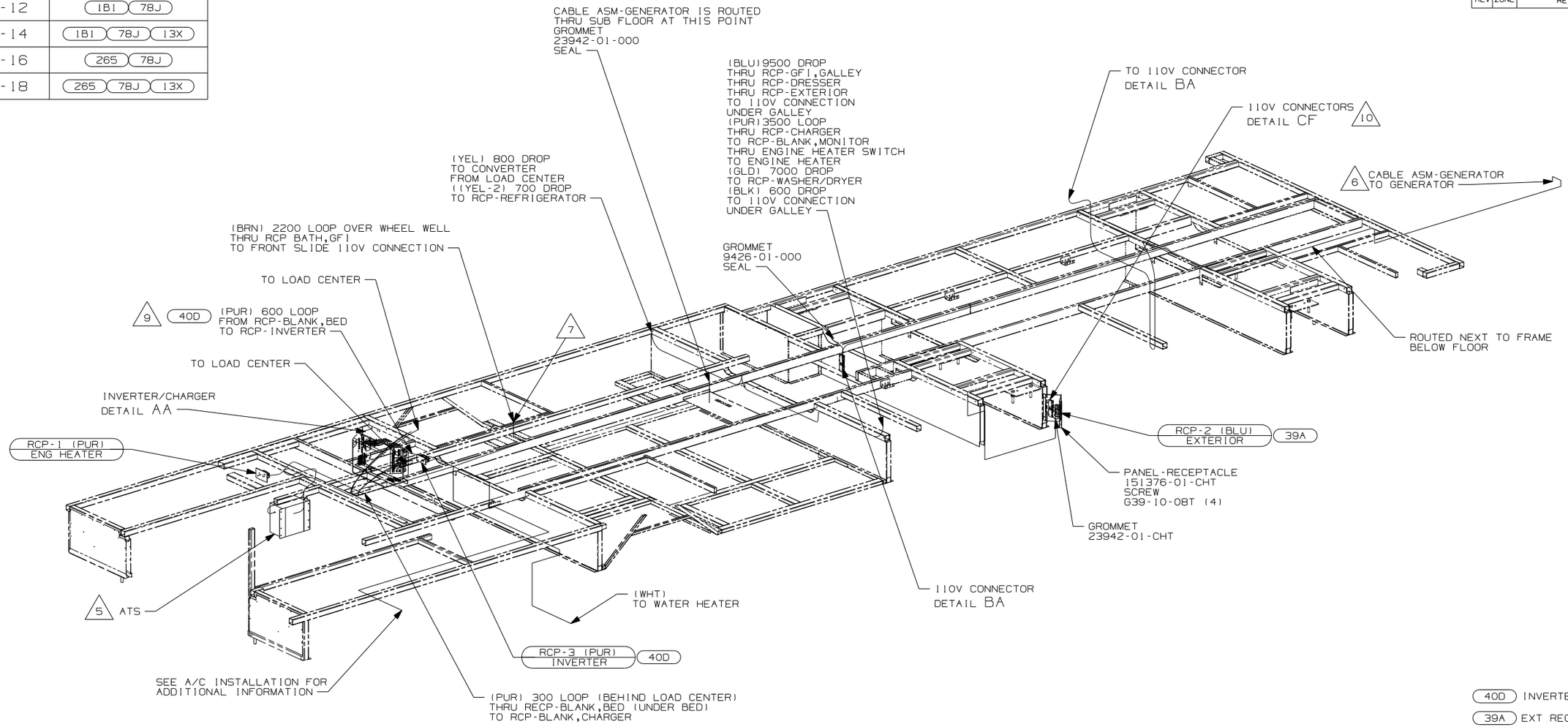

40D INVERTER-DC/AC,600 WATT
39A EXT RECEPTACLE DPLX 120VAC
78J ELECTRICAL SYSTEM-50 AMP
13X INVERTER/CHARGER 2.0 KW
265 CODES/STANDARDS-CSA/CMVSS
1B1 CODES/STANDARDS USA

10 LOCATE 110V CONNECTOR BEHIND EXT RECP PANEL.

9 CUT LOOP & CONNECT AS SHOWN IN DETAIL AA.

8 SEE WIRING INSTL-CHASSIS FOR ADDITIONAL INFORMATION.

7 ROUTE WIRES WITH WATER LINES THRU FLOOR.

6 FOR MORE INFORMATION SEE GENERATOR INSTALLATION.

5 FOR MORE INFORMATION SEE LOAD CENTER/ATS ASM.

4. FOR MORE INFORMATION SEE WIRING DIAGRAM-BODY,110V.

3. ALL GROUND WIRE TO BE COVERED WITH TUBING 8041-02-000.

2. ALL 110V WIRE TO BE CLAMPED WITH CLAMP 10497-05-000 WITHIN 200MM OF OUTLET BOXES, USE SCREW G67-10-12B.

1. ALL WIRES TO BE SECURED WITH CLAMP 10495 OR 10497 OR WIRE TIE 8343 OR 108046 EVERY 600MM, USE SCREW G67-XX-XXX OR G56-XX-XXX AS APPROPRIATE FOR INSTALLATION.

NOTES:

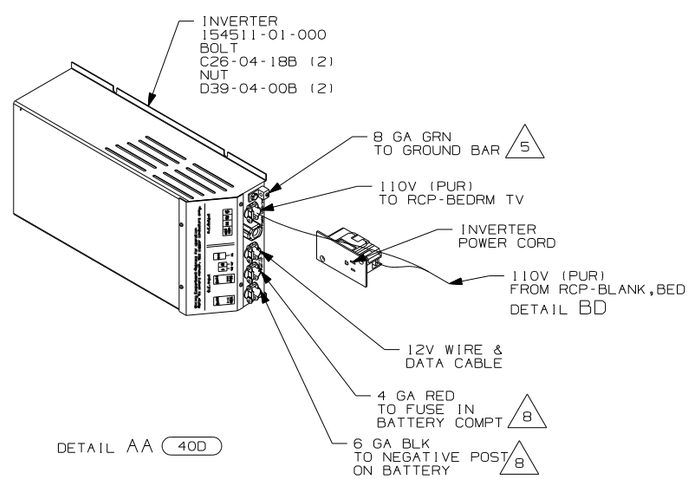

DETAIL AA 40D

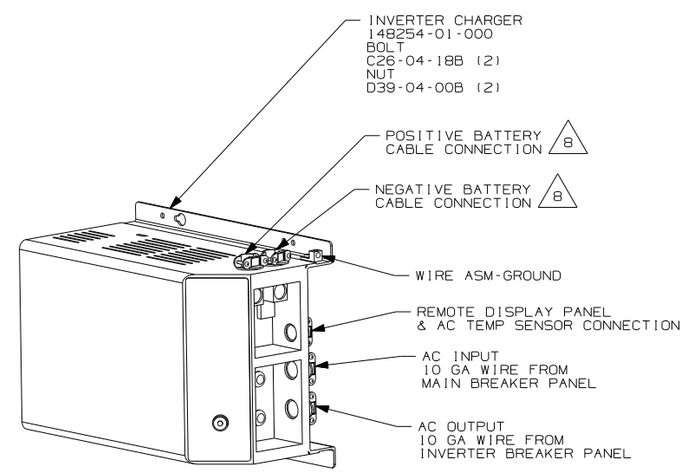

DETAIL AA 13X

1B1 265

WINNEBAGO INDUSTRIES

DFTR	ORIG. DATE
CHKR	ALL DIMENSIONS ARE IN MILLIMETERS
P.E.	
M.E.	FIRST USED 06 P39K
DSNR	

UNSPECIFIED TOLERANCES ARE: WHOLE DIM (X) : ; ONE-PLACE (X.X) : ; TWO-PLACE (X.XX) : ; ANGLE :

MATERIAL:

THIRD ANGLE PROJECTION

DO NOT SCALE DRAWING

TITLE: WIRING INSTL-BODY,110V

SHEET 1 OF 3 | PART NO 154197

DWG NO 154197

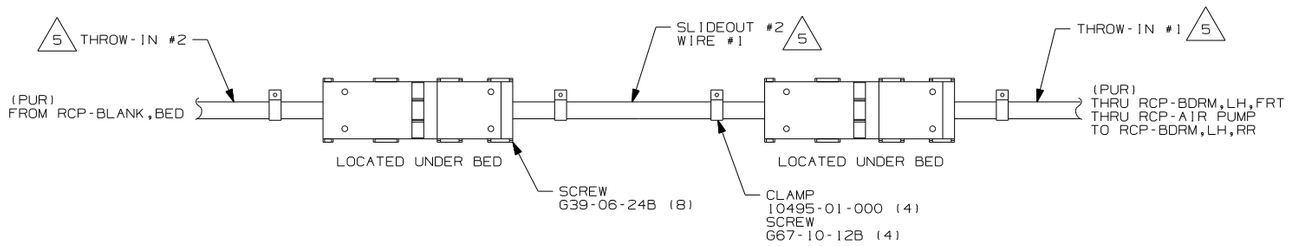

DETAIL BC

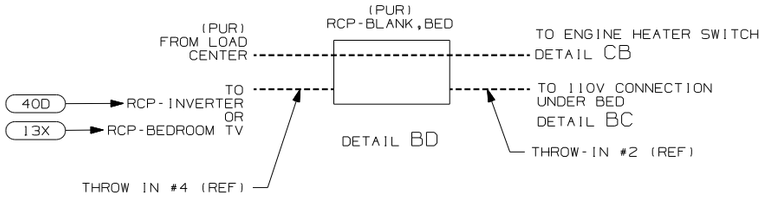

DETAIL BD

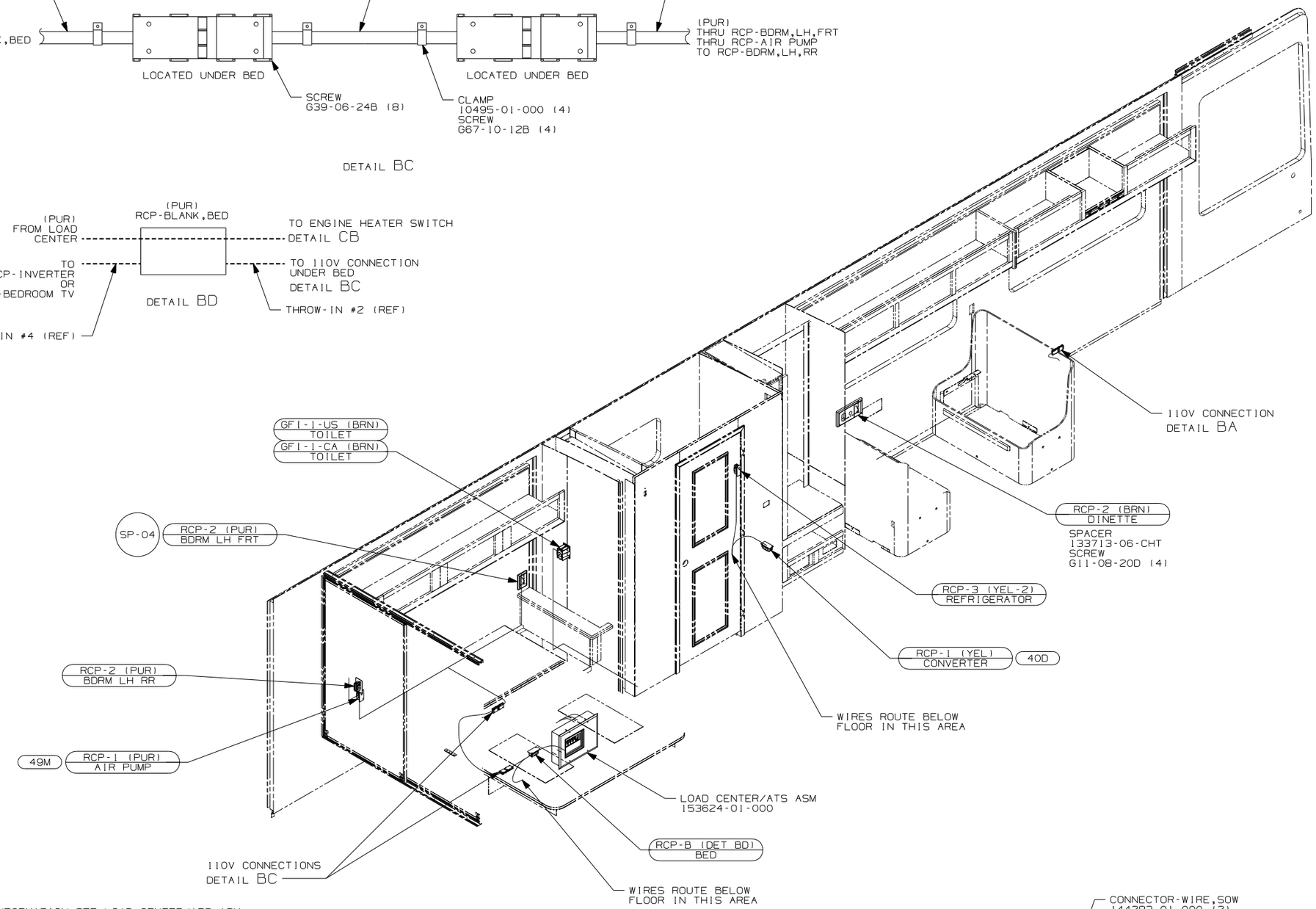

5 FOR MORE INFORMATION SEE LOAD CENTER/ATS ASM.

4. FOR MORE INFORMATION SEE WIRING DIAGRAM-BODY,110V.

3. ALL GROUND WIRE TO BE COVERED WITH TUBING 8041-02-000.

2. ALL 110V WIRE TO BE CLAMPED WITH CLAMP 10497-05-000 WITHIN 200MM OF OUTLET BOXES, USE SCREW G67-10-12B.

1. ALL WIRES TO BE SECURED WITH CLAMP 10495 OR 10497 OR WIRE TIE 8343 OR 108046 EVERY 600MM, USE SCREW G67-XX-XXX OR G56-XX-XXX AS APPROPRIATE FOR INSTALLATION.

NOTES:

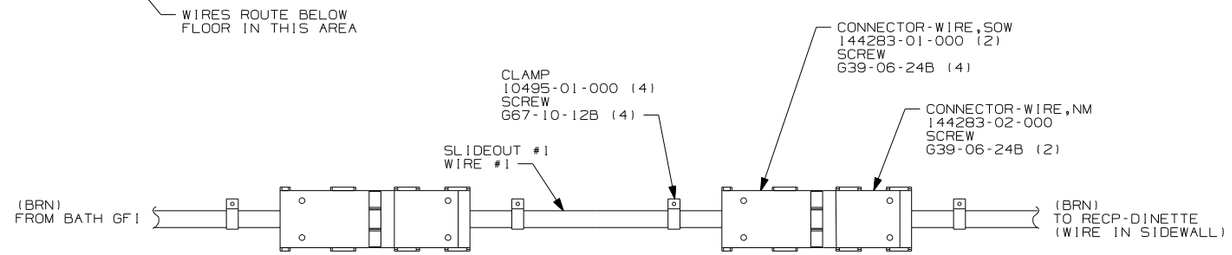

DETAIL BA

13X INVERTER/CHARGER 2.0 KW

40D INVERTER-DC/AC,600 WATT

49M SLEEP NUMBER BED-QUEEN SIZE

265 CODES/STANDARDS-CSA/CMVSS

181 CODES/STANDARDS USA

181 265

FIRST USED	06 P39K
DO NOT SCALE DRAWING	
TITLE: WIRING INSTL-BODY,110V	
SHEET 2	PART NO 154197

DWG NO 154197

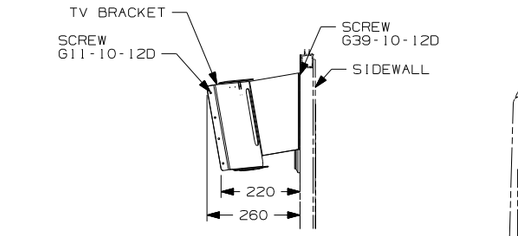

VIEW CB

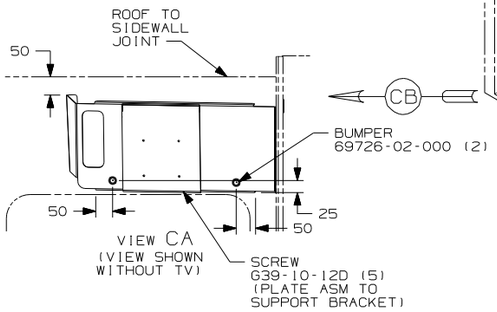

VIEW CA
(VIEW SHOWN WITHOUT TV)

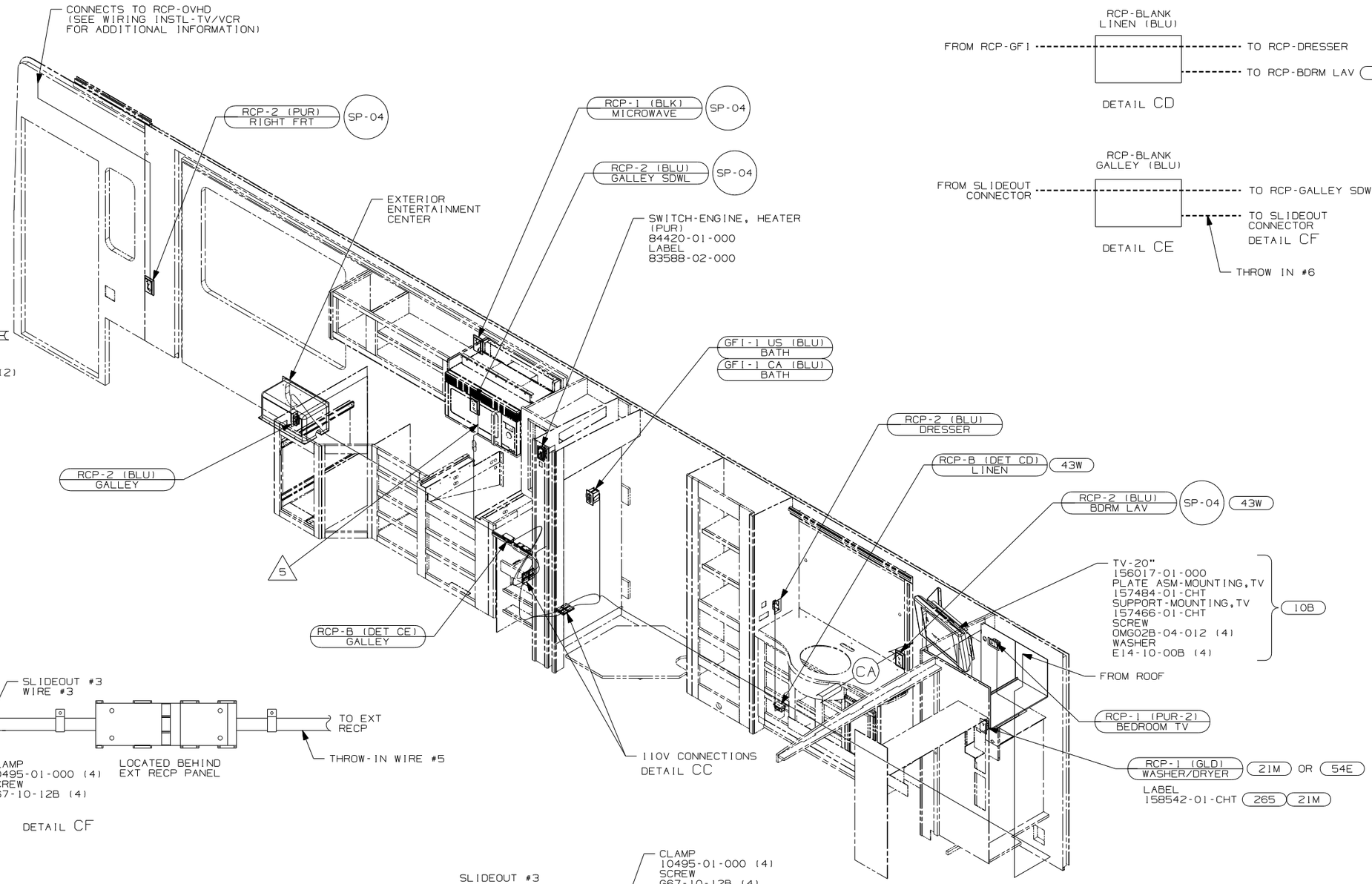

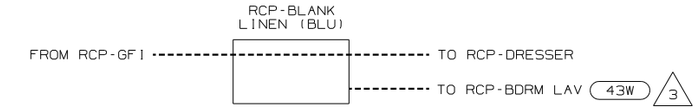

DETAIL CD

DETAIL CE

DETAIL CF

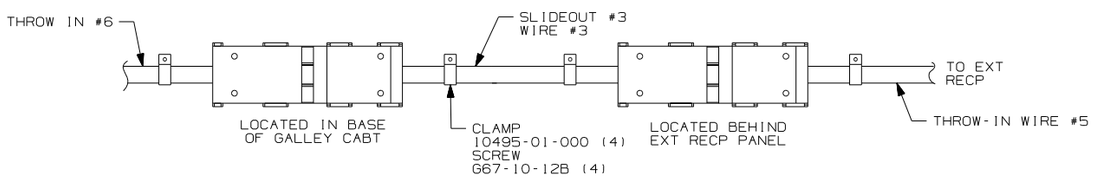

DETAIL CF

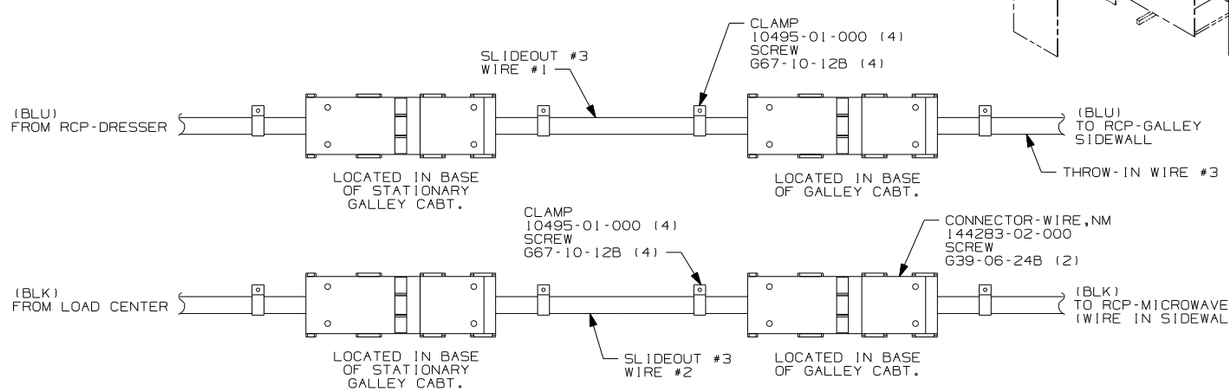

DETAIL CC

54E	WASHER/DRYER
43W	CABINET-LAVATORY
10B	TV-LCD(REAR)EXCHANGE
21M	WASHER/DRYER PREP
265	CODES/STANDARDS-CSA/CMVSS
1B1	CODES/STANDARDS USA

1B1 265

5 ROUTE WIRE IN SIDEWALL DURING INSATALLATION.

4 WIRE FROM ROOF ASM.

3 WIRE TO BE ROUTED IN SIDEWALL.

2. ALL 110V WIRES TO BE CLAMPED WITH CLAMP 10497-05-000 WITHIN 200MM OF OUTLET BOXES, USE SCREW G67-10-12B.

1. ALL WIRES TO BE SECURED WITH CLAMP 10495 OR 10497 OR WIRE TIE 8343 OR 108046 EVERY 600MM, USE SCREW G67-XX-XXX OR G56-XX-XXX AS APPROPRIATE FOR INSTALLATION.

NOTES:

FIRST USED 06 P39K

DO NOT SCALE DRAWING

TITLE: WIRING INSTL-BODY,110V

SHEET 3 PART NO 154197

RELEASE	REV A	DATE	DWG NO 154214

REV	ZONE	REVISION RECORD	DATE	DFTR-ORIG

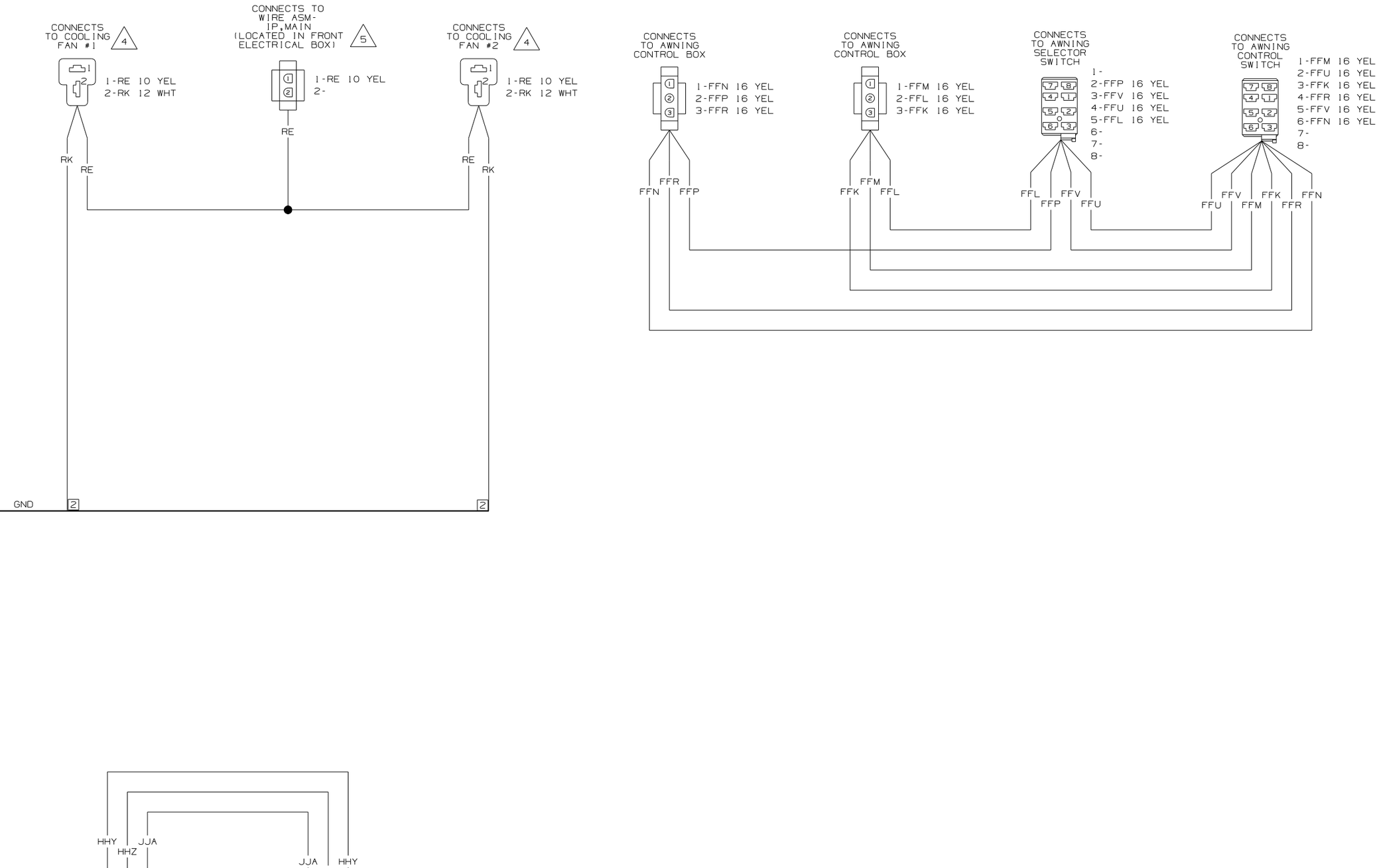

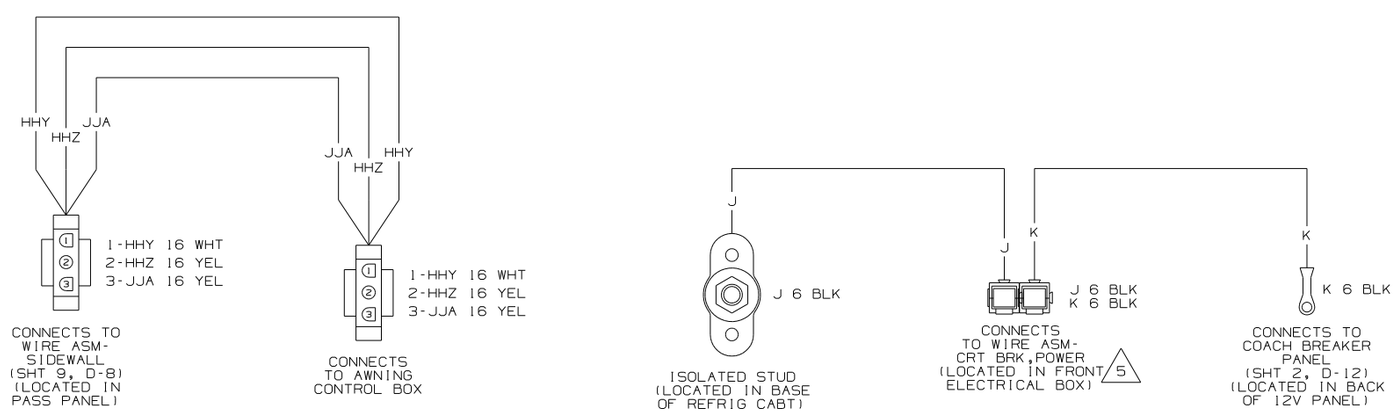

WIRING DIAGRAM-CHASSIS
(WIRE ASM 154211 REV-F)

WINNEBAGO

DFTR	ORIG. DATE
CHKR	ALL DIMENSIONS ARE IN MILLIMETERS
P.E.	
M.E.	FIRST USED 06 P39K
DSNR	

UNSPECIFIED TOLERANCES ARE:
WHOLE DIM (X) :
ONE-PLACE (X.X) :
TWO-PLACE (X.XX) :
ANGLE :

MATERIAL:

THIRD ANGLE PROJECTION

DO NOT SCALE DRAWING

TITLE: WIRING DIAGRAM-BODY,12V

F1 SHEET 1 OF 9 PART NO 154214

REF: 1

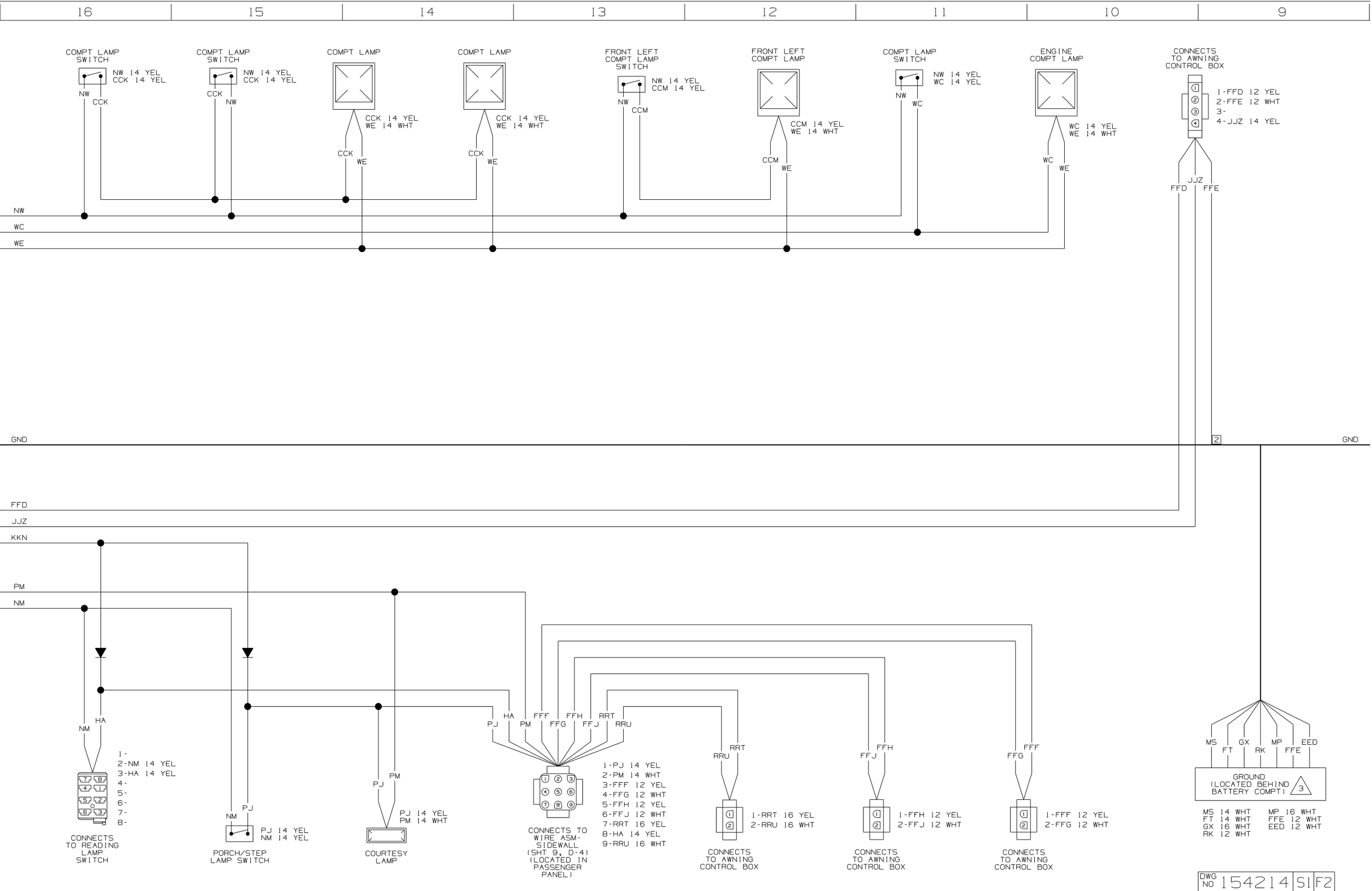
16
15
14
13
12
11
10
9
COMPT LAMP SWITCH
NW 14 YEL
CCK 14 YEL
NW
CCK
COMPT LAMP SWITCH
NW 14 YEL
CCK 14 YEL
CCK
NW
COMPT LAMP
CCK 14 YEL
WE 14 WHT
CCK
WE
COMPT LAMP
CCK 14 YEL
WE 14 WHT
CCK
WE
FRONT LEFT COMPT LAMP SWITCH
NW 14 YEL
CCM 14 YEL
NW
CCM
FRONT LEFT COMPT LAMP
CCM 14 YEL
WE 14 WHT
CCM
WE
COMPT LAMP SWITCH
NW 14 YEL
WC 14 YEL
NW
WC
ENGINE COMPT LAMP
WC 14 YEL
WE 14 WHT
WC
WE
CONNECTS TO AWNING CONTROL BOX
1-FFD 12 YEL
2-FFE 12 WHT
3-
4-JJZ 14 YEL
JJZ
FFD
FFE
NW
WC
WE
GND
2
GND
FFD
JJZ
KKN
PM
NM
HA
NM
1-
2-NM 14 YEL
3-HA 14 YEL
4-
5-
6-
7-
8-
CONNECTS TO READING LAMP SWITCH
PJ
NM
PJ 14 YEL
NM 14 YEL
PORCH/STEP LAMP SWITCH
PM
PJ
PJ 14 YEL
PM 14 WHT
COURTESY LAMP
PJ
HA
PM
FFF
FFG
FFH
FFJ
RRT
RRU
CONNECTS TO WIRE ASM-SIDEWALL (SHT 9, D-4) (LOCATED IN PASSENGER PANEL)
1-PJ 14 YEL
2-PM 14 WHT
3-FFF 12 YEL
4-FFG 12 WHT
5-FFH 12 YEL
6-FFJ 12 WHT
7-RRT 16 YEL
8-HA 14 YEL
9-RRU 16 WHT
RRT
RRU
1-RRT 16 YEL
2-RRU 16 WHT
CONNECTS TO AWNING CONTROL BOX
FFH
FFJ
1-FFH 12 YEL
2-FFJ 12 WHT
CONNECTS TO AWNING CONTROL BOX
FFF
FFG
1-FFF 12 YEL
2-FFG 12 WHT
CONNECTS TO AWNING CONTROL BOX
MS
FT
GX
RK
MP
FFE
EED
GROUND (LOCATED BEHIND BATTERY COMPT)
3
MS 14 WHT
FT 14 WHT
GX 16 WHT
RK 12 WHT
MP 16 WHT
FFE 12 WHT
EED 12 WHT
DWG NO 154214 S1 F2
16
15
14
13
12
11
10
9

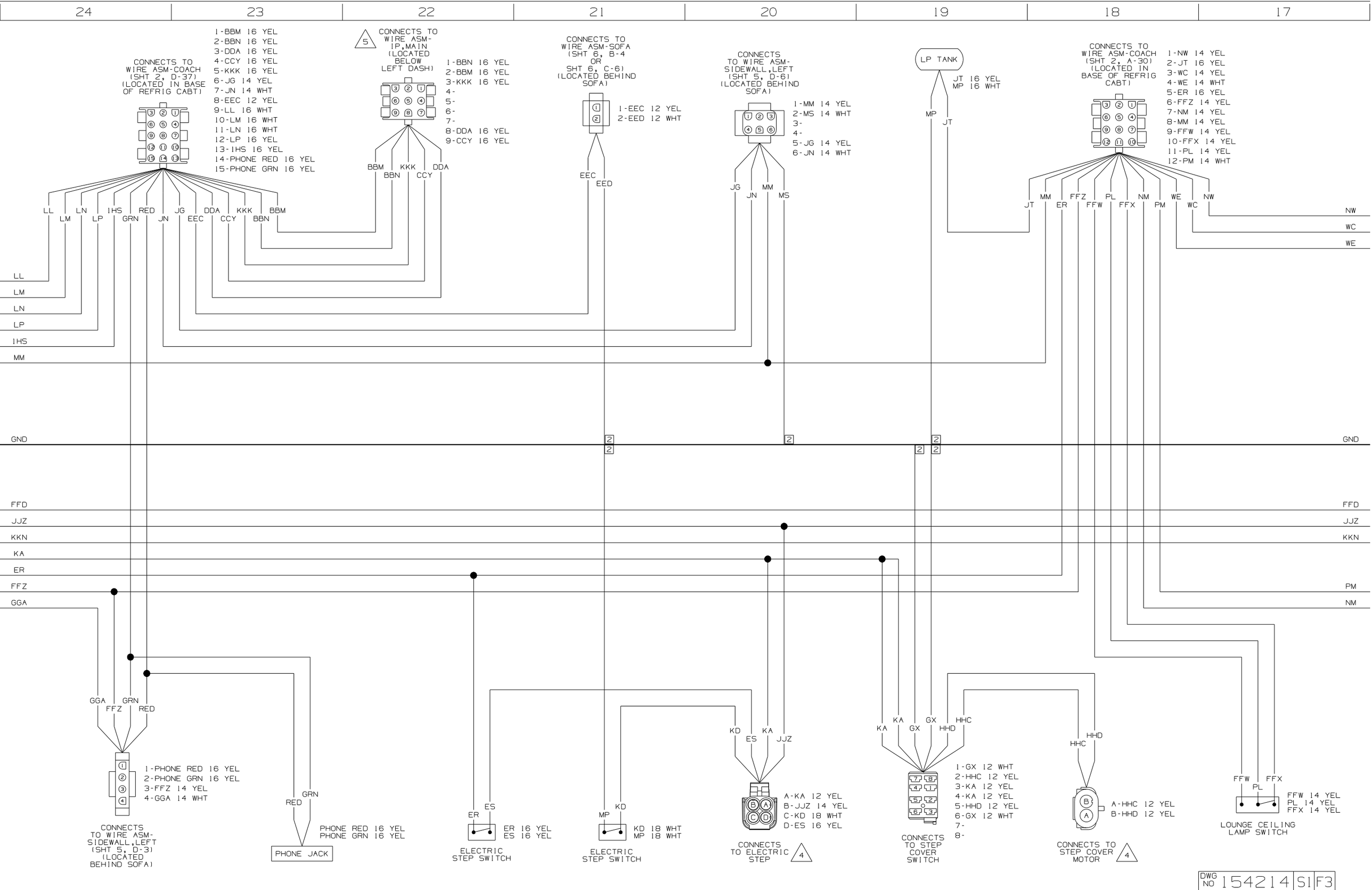
24
23
22
21
20
19
18
17
CONNECTS TO WIRE ASM-COACH (SHT 2, D-37) (LOCATED IN BASE OF REFRIG CABT)
1-BBM 16 YEL
2-BBN 16 YEL
3-DDA 16 YEL
4-CCY 16 YEL
5-KKK 16 YEL
6-JG 14 YEL
7-JN 14 WHT
8-EEC 12 YEL
9-LL 16 WHT
10-LM 16 WHT
11-LN 16 WHT
12-LP 16 YEL
13-IHS 16 YEL
14-PHONE RED 16 YEL
15-PHONE GRN 16 YEL
5
CONNECTS TO WIRE ASM-IP,MAIN (LOCATED BELOW LEFT DASH)
1-BBN 16 YEL
2-BBM 16 YEL
3-KKK 16 YEL
4-
5-
6-
7-
8-DDA 16 YEL
9-CCY 16 YEL
CONNECTS TO WIRE ASM-SOFA (SHT 6, B-4 OR SHT 6, C-6) (LOCATED BEHIND SOFA)
1-EEC 12 YEL
2-EED 12 WHT
CONNECTS TO WIRE ASM-SIDEWALL,LEFT (SHT 5, D-6) (LOCATED BEHIND SOFA)
1-MM 14 YEL
2-MS 14 WHT
3-
4-
5-JG 14 YEL
6-JN 14 WHT
LP TANK
JT 16 YEL
MP 16 WHT
CONNECTS TO WIRE ASM-COACH (SHT 2, A-30) (LOCATED IN BASE OF REFRIG CABT)
1-NW 14 YEL
2-JT 16 YEL
3-WC 14 YEL
4-WE 14 WHT
5-ER 16 YEL
6-FFZ 14 YEL
7-NM 14 YEL
8-MM 14 YEL
9-FFW 14 YEL
10-FFX 14 YEL
11-PL 14 YEL
12-PM 14 WHT
LL
LM
LN
LP
IHS
RED
GRN
JN
JG
EEC
DDA
CCY
KKK
BBN
BBM
EED
MS
MP
JT
MM
ER
FFZ
FFW
FFX
PL
NM
PM
WE
WC
NW
GND
FFD
JJZ
KKN
KA
GGA
1-PHONE RED 16 YEL
2-PHONE GRN 16 YEL
3-FFZ 14 YEL
4-GGA 14 WHT
CONNECTS TO WIRE ASM-SIDEWALL,LEFT (SHT 5, D-3) (LOCATED BEHIND SOFA)
PHONE RED 16 YEL
PHONE GRN 16 YEL
PHONE JACK
ER 16 YEL
ES 16 YEL
ELECTRIC STEP SWITCH
KD 18 WHT
MP 18 WHT
ELECTRIC STEP SWITCH
A-KA 12 YEL
B-JJZ 14 YEL
C-KD 18 WHT
D-ES 16 YEL
CONNECTS TO ELECTRIC STEP
4
1-GX 12 WHT
2-HHC 12 YEL
3-KA 12 YEL
4-KA 12 YEL
5-HHD 12 YEL
6-GX 12 WHT
7-
8-
CONNECTS TO STEP COVER SWITCH
A-HHC 12 YEL
B-HHD 12 YEL
CONNECTS TO STEP COVER MOTOR
4
FFW 14 YEL
PL 14 YEL
FFX 14 YEL
LOUNGE CEILING LAMP SWITCH
DWG NO 154214 S1 F3

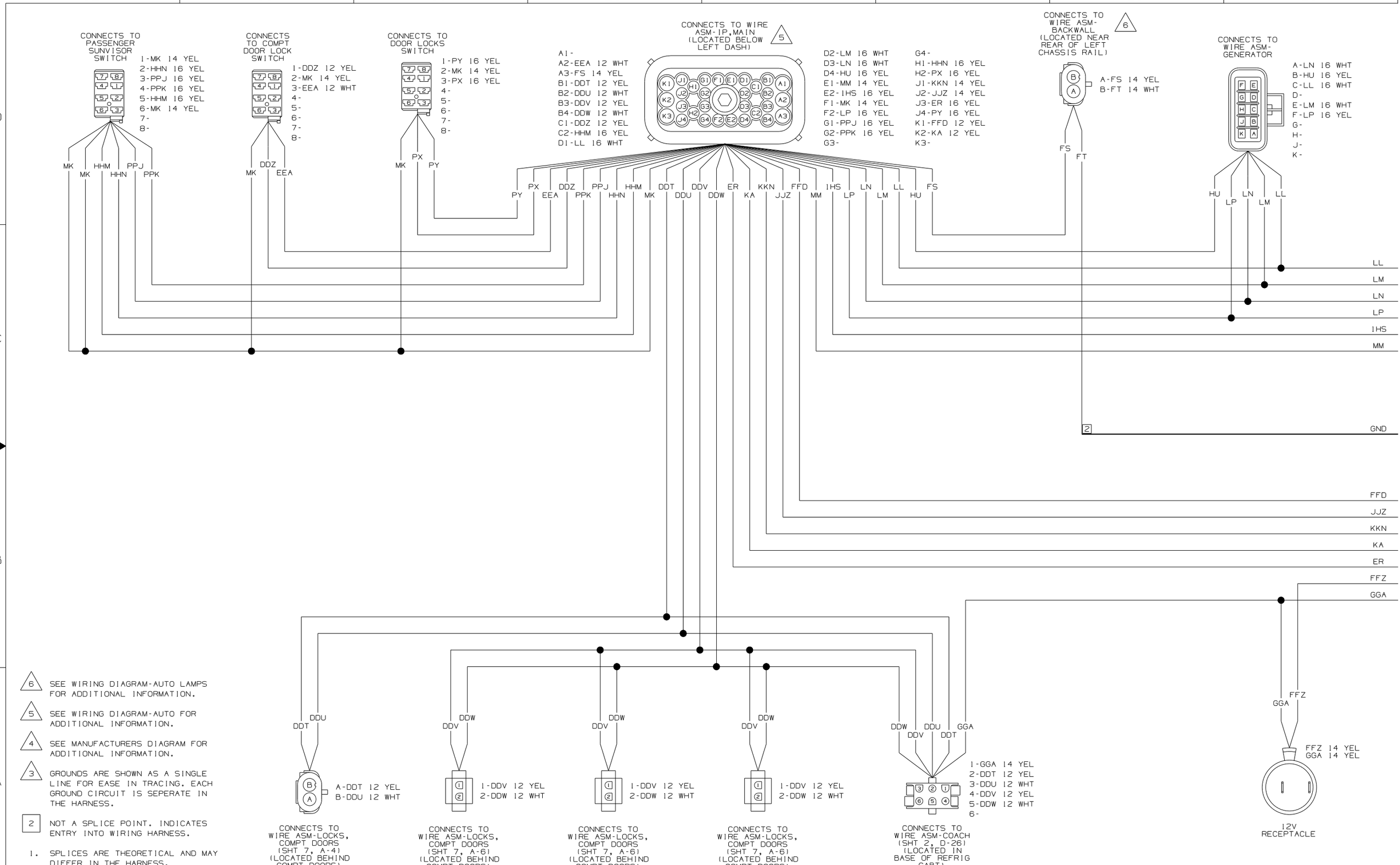

NOTES:

1. SPLICES ARE THEORETICAL AND MAY DIFFER IN THE HARNESS.

2 NOT A SPLICE POINT. INDICATES ENTRY INTO WIRING HARNESS.

3 GROUNDS ARE SHOWN AS A SINGLE LINE FOR EASE IN TRACING. EACH GROUND CIRCUIT IS SEPERATE IN THE HARNESS.

4 SEE MANUFACTURERS DIAGRAM FOR ADDITIONAL INFORMATION.

5 SEE WIRING DIAGRAM-AUTO FOR ADDITIONAL INFORMATION.

6 SEE WIRING DIAGRAM-AUTO LAMPS FOR ADDITIONAL INFORMATION.

DWG NO 154214 S1 F4

DWG NO 154214

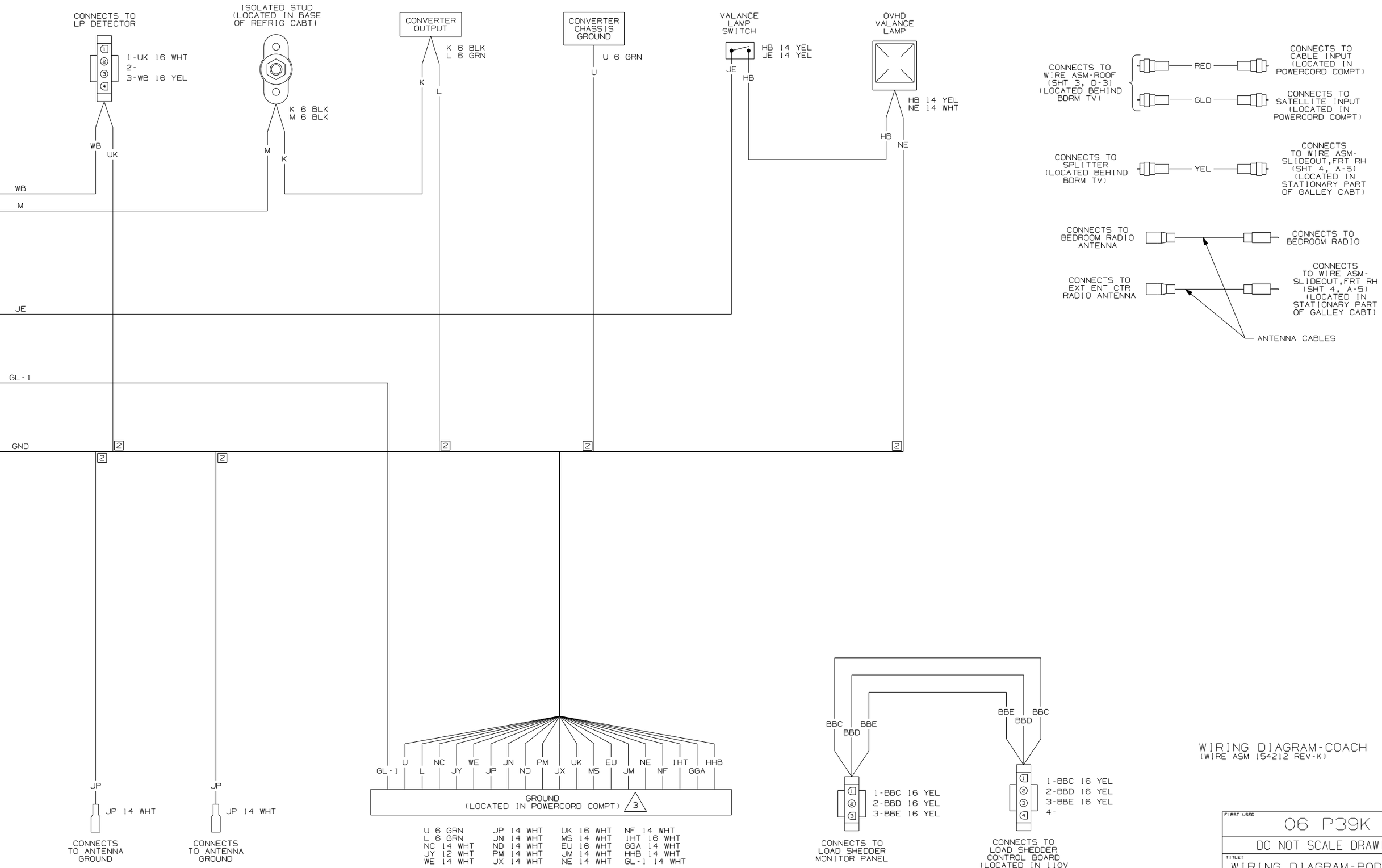

WIRING DIAGRAM-COACH
(WIRE ASM 154212 REV-K)

FIRST USED	06 P39K
DO NOT SCALE DRAWING	
TITLE: WIRING DIAGRAM-BODY,12V	
F1 SHEET 2	PART NO 154214

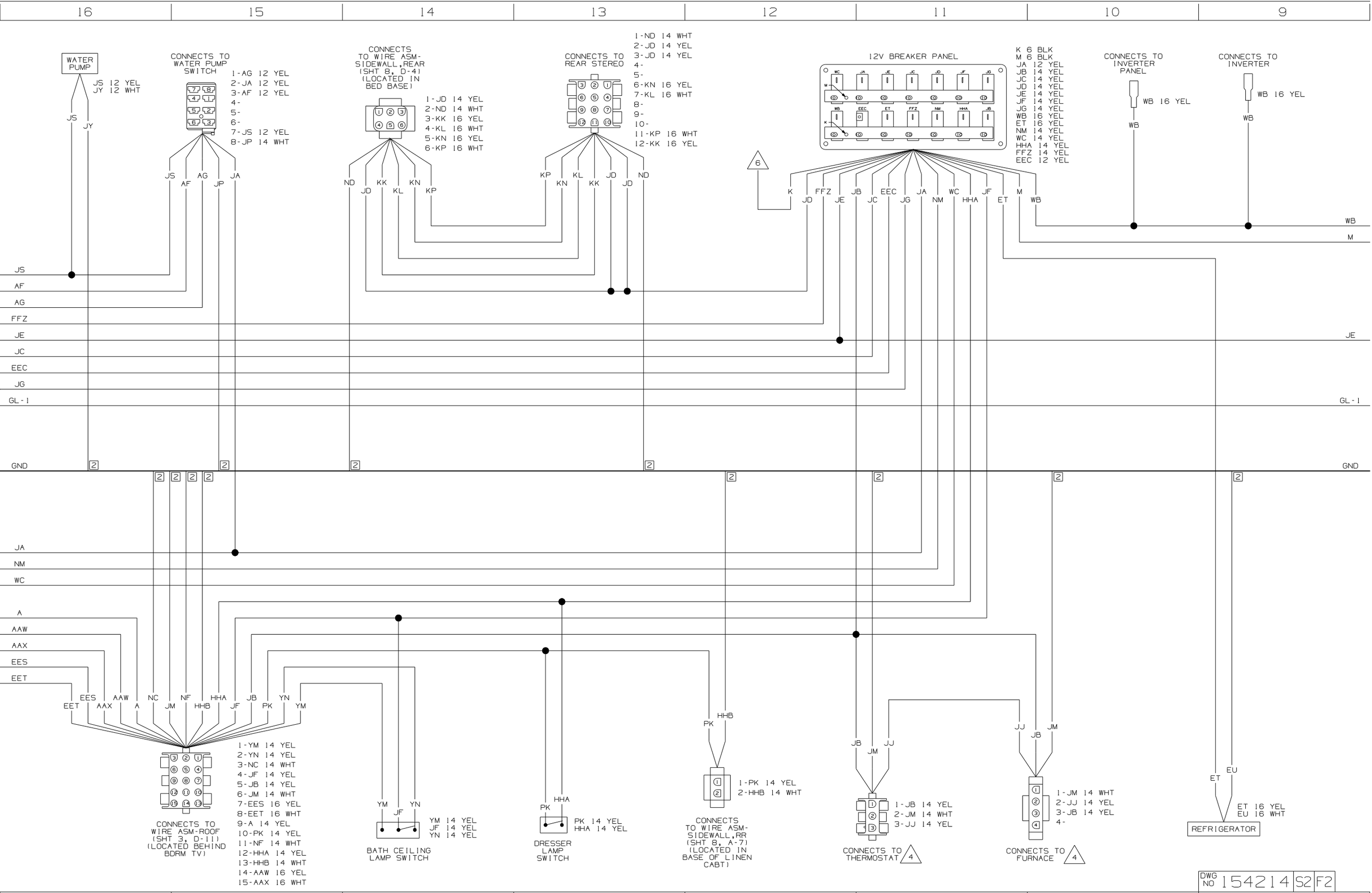
16
15
14
13
12
11
10
9
WATER PUMP
JS 12 YEL
JY 12 WHT
CONNECTS TO WATER PUMP SWITCH
1-AG 12 YEL
2-JA 12 YEL
3-AF 12 YEL
4-
5-
6-
7-JS 12 YEL
8-JP 14 WHT
CONNECTS TO WIRE ASM-SIDEWALL,REAR (SHT 8, D-4) (LOCATED IN BED BASE)
1-JD 14 YEL
2-ND 14 WHT
3-KK 16 YEL
4-KL 16 WHT
5-KN 16 YEL
6-KP 16 WHT
CONNECTS TO REAR STEREO
1-ND 14 WHT
2-JD 14 YEL
3-JD 14 YEL
4-
5-
6-KN 16 YEL
7-KL 16 WHT
8-
9-
10-
11-KP 16 WHT
12-KK 16 YEL
12V BREAKER PANEL
K 6 BLK
M 6 BLK
JA 12 YEL
JB 14 YEL
JC 14 YEL
JD 14 YEL
JE 14 YEL
JF 14 YEL
JG 14 YEL
WB 16 YEL
ET 16 YEL
NM 14 YEL
WC 14 YEL
HHA 14 YEL
FFZ 14 YEL
EEC 12 YEL
CONNECTS TO INVERTER PANEL
WB 16 YEL
CONNECTS TO INVERTER
WB 16 YEL
JS
AF
AG
FFZ
JE
JC
EEC
JG
GL-1
GND
JA
NM
WC
A
AAW
AAX
EES
EET
CONNECTS TO WIRE ASM-ROOF (SHT 3, D-11) (LOCATED BEHIND BDRM TV)
1-YM 14 YEL
2-YN 14 YEL
3-NC 14 WHT
4-JF 14 YEL
5-JB 14 YEL
6-JM 14 WHT
7-EES 16 YEL
8-EET 16 WHT
9-A 14 YEL
10-PK 14 YEL
11-NF 14 WHT
12-HHA 14 YEL
13-HHB 14 WHT
14-AAW 16 YEL
15-AAX 16 WHT
BATH CEILING LAMP SWITCH
YM 14 YEL
JF 14 YEL
YN 14 YEL
DRESSER LAMP SWITCH
PK 14 YEL
HHA 14 YEL
CONNECTS TO WIRE ASM-SIDEWALL,RR (SHT 8, A-7) (LOCATED IN BASE OF LINEN CABT)
1-PK 14 YEL
2-HHB 14 WHT
CONNECTS TO THERMOSTAT 4
1-JB 14 YEL
2-JM 14 WHT
3-JJ 14 YEL
CONNECTS TO FURNACE 4
1-JM 14 WHT
2-JJ 14 YEL
3-JB 14 YEL
4-
REFRIGERATOR
ET 16 YEL
EU 16 WHT
DWG NO 154214 S2 F2
8/18/2005 37

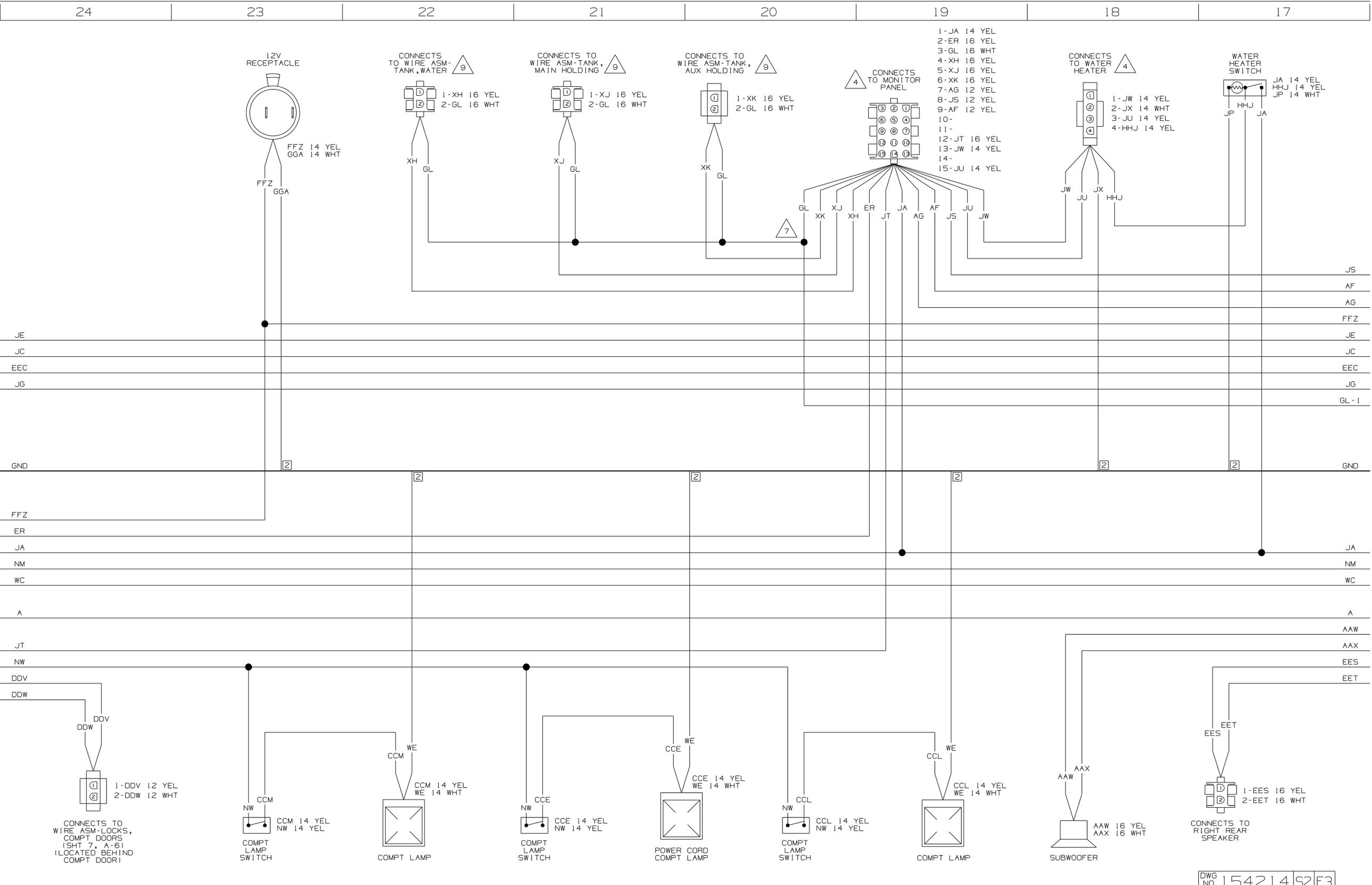
24
23
22
21
20
19
18
17
12V RECEPTACLE
FFZ 14 YEL
GGA 14 WHT
FFZ
GGA
CONNECTS TO WIRE ASM-TANK,WATER 9
1-XH 16 YEL
2-GL 16 WHT
XH
GL
CONNECTS TO WIRE ASM-TANK, MAIN HOLDING 9
1-XJ 16 YEL
2-GL 16 WHT
XJ
GL
CONNECTS TO WIRE ASM-TANK, AUX HOLDING 9
1-XK 16 YEL
2-GL 16 WHT
XK
GL
4 CONNECTS TO MONITOR PANEL
1-JA 14 YEL
2-ER 16 YEL
3-GL 16 WHT
4-XH 16 YEL
5-XJ 16 YEL
6-XK 16 YEL
7-AG 12 YEL
8-JS 12 YEL
9-AF 12 YEL
10-
11-
12-JT 16 YEL
13-JW 14 YEL
14-
15-JU 14 YEL
GL XK XJ XH ER JT JA AG AF JS JU JW
7
CONNECTS TO WATER HEATER 4
1-JW 14 YEL
2-JX 14 WHT
3-JU 14 YEL
4-HHJ 14 YEL
JW JU JX HHJ
WATER HEATER SWITCH
JA 14 YEL
HHJ 14 YEL
JP 14 WHT
JP HHJ JA
JS
AF
AG
FFZ
JE
JC
EEC
JG
GL-1
GND
2
FFZ
ER
JA
NM
WC
A
JT
NW
DDV
DDW
1-DDV 12 YEL
2-DDW 12 WHT
CONNECTS TO WIRE ASM-LOCKS, COMPT DOORS (SHT 7, A-6) (LOCATED BEHIND COMPT DOOR)
CCM
NW
CCM 14 YEL
NW 14 YEL
COMPT LAMP SWITCH
WE
CCM 14 YEL
WE 14 WHT
COMPT LAMP
CCE
CCE 14 YEL
NW 14 YEL
COMPT LAMP SWITCH
CCE 14 YEL
WE 14 WHT
POWER CORD COMPT LAMP
CCL
CCL 14 YEL
NW 14 YEL
COMPT LAMP SWITCH
CCL 14 YEL
WE 14 WHT
COMPT LAMP
AAW
AAX
AAW 16 YEL
AAX 16 WHT
SUBWOOFER
EES
EET
1-EES 16 YEL
2-EET 16 WHT
CONNECTS TO RIGHT REAR SPEAKER
DWG NO 154214 S2 F3
8/18/2005 38

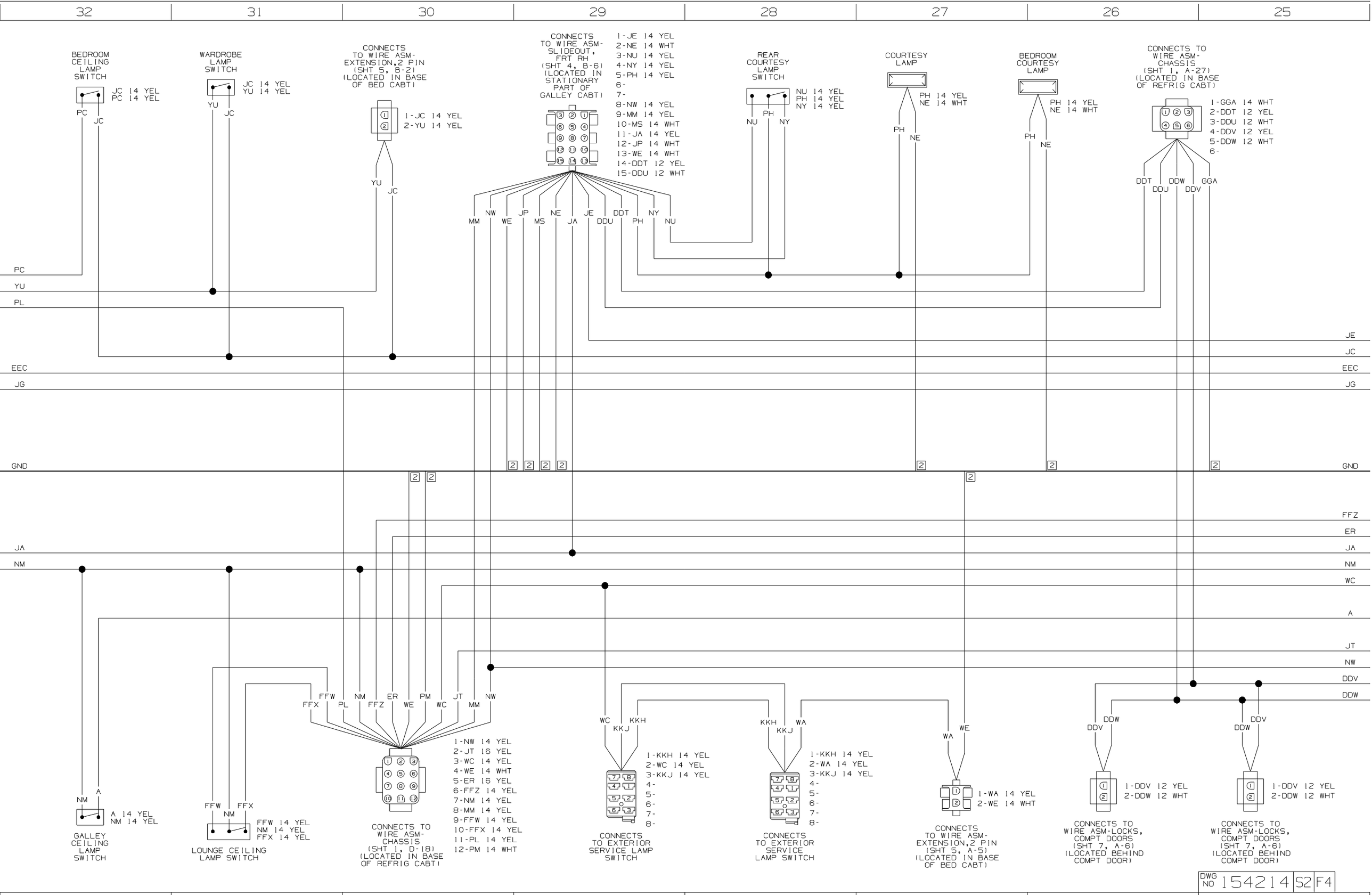
32
31
30
29
28
27
26
25
BEDROOM CEILING LAMP SWITCH
JC 14 YEL
PC 14 YEL
PC
JC
WARDROBE LAMP SWITCH
JC 14 YEL
YU 14 YEL
YU
JC
CONNECTS TO WIRE ASM-EXTENSION,2 PIN (SHT 5, B-2) (LOCATED IN BASE OF BED CABT)
1-JC 14 YEL
2-YU 14 YEL
YU
JC
CONNECTS TO WIRE ASM-SLIDEOUT, FRT RH (SHT 4, B-6) (LOCATED IN STATIONARY PART OF GALLEY CABT)
1-JE 14 YEL
2-NE 14 WHT
3-NU 14 YEL
4-NY 14 YEL
5-PH 14 YEL
6-
7-
8-NW 14 YEL
9-MM 14 YEL
10-MS 14 WHT
11-JA 14 YEL
12-JP 14 WHT
13-WE 14 WHT
14-DDT 12 YEL
15-DDU 12 WHT
MM NW WE JP MS NE JA JE DDU DDT PH NY NU
REAR COURTESY LAMP SWITCH
NU 14 YEL
PH 14 YEL
NY 14 YEL
NU PH NY
COURTESY LAMP
PH 14 YEL
NE 14 WHT
PH NE
BEDROOM COURTESY LAMP
PH 14 YEL
NE 14 WHT
PH NE
CONNECTS TO WIRE ASM-CHASSIS (SHT 1, A-27) (LOCATED IN BASE OF REFRIG CABT)
1-GGA 14 WHT
2-DDT 12 YEL
3-DDU 12 WHT
4-DDV 12 YEL
5-DDW 12 WHT
6-
DDT DDU DDW DDV GGA
PC
YU
PL
JE
JC
EEC
JG
GND
JA
NM
FFZ
ER
WC
A
JT
NW
DDV
DDW
NM A
A 14 YEL
NM 14 YEL
GALLEY CEILING LAMP SWITCH
FFW NM FFX
FFW 14 YEL
NM 14 YEL
FFX 14 YEL
LOUNGE CEILING LAMP SWITCH
FFX FFW PL NM FFZ ER WE PM WC JT MM NW
1-NW 14 YEL
2-JT 16 YEL
3-WC 14 YEL
4-WE 14 WHT
5-ER 16 YEL
6-FFZ 14 YEL
7-NM 14 YEL
8-MM 14 YEL
9-FFW 14 YEL
10-FFX 14 YEL
11-PL 14 YEL
12-PM 14 WHT
CONNECTS TO WIRE ASM-CHASSIS (SHT 1, D-18) (LOCATED IN BASE OF REFRIG CABT)
WC KKJ KKH
1-KKH 14 YEL
2-WC 14 YEL
3-KKJ 14 YEL
4-
5-
6-
7-
8-
CONNECTS TO EXTERIOR SERVICE LAMP SWITCH
KKH KKJ WA
1-KKH 14 YEL
2-WA 14 YEL
3-KKJ 14 YEL
4-
5-
6-
7-
8-
CONNECTS TO EXTERIOR SERVICE LAMP SWITCH
WA WE
1-WA 14 YEL
2-WE 14 WHT
CONNECTS TO WIRE ASM-EXTENSION,2 PIN (SHT 5, A-5) (LOCATED IN BASE OF BED CABT)
DDV DDW
1-DDV 12 YEL
2-DDW 12 WHT
CONNECTS TO WIRE ASM-LOCKS, COMPT DOORS (SHT 7, A-6) (LOCATED BEHIND COMPT DOOR)
DDW DDV
1-DDV 12 YEL
2-DDW 12 WHT
CONNECTS TO WIRE ASM-LOCKS, COMPT DOORS (SHT 7, A-6) (LOCATED BEHIND COMPT DOOR)
DWG NO 154214 S2 F4
8/18/2005 39

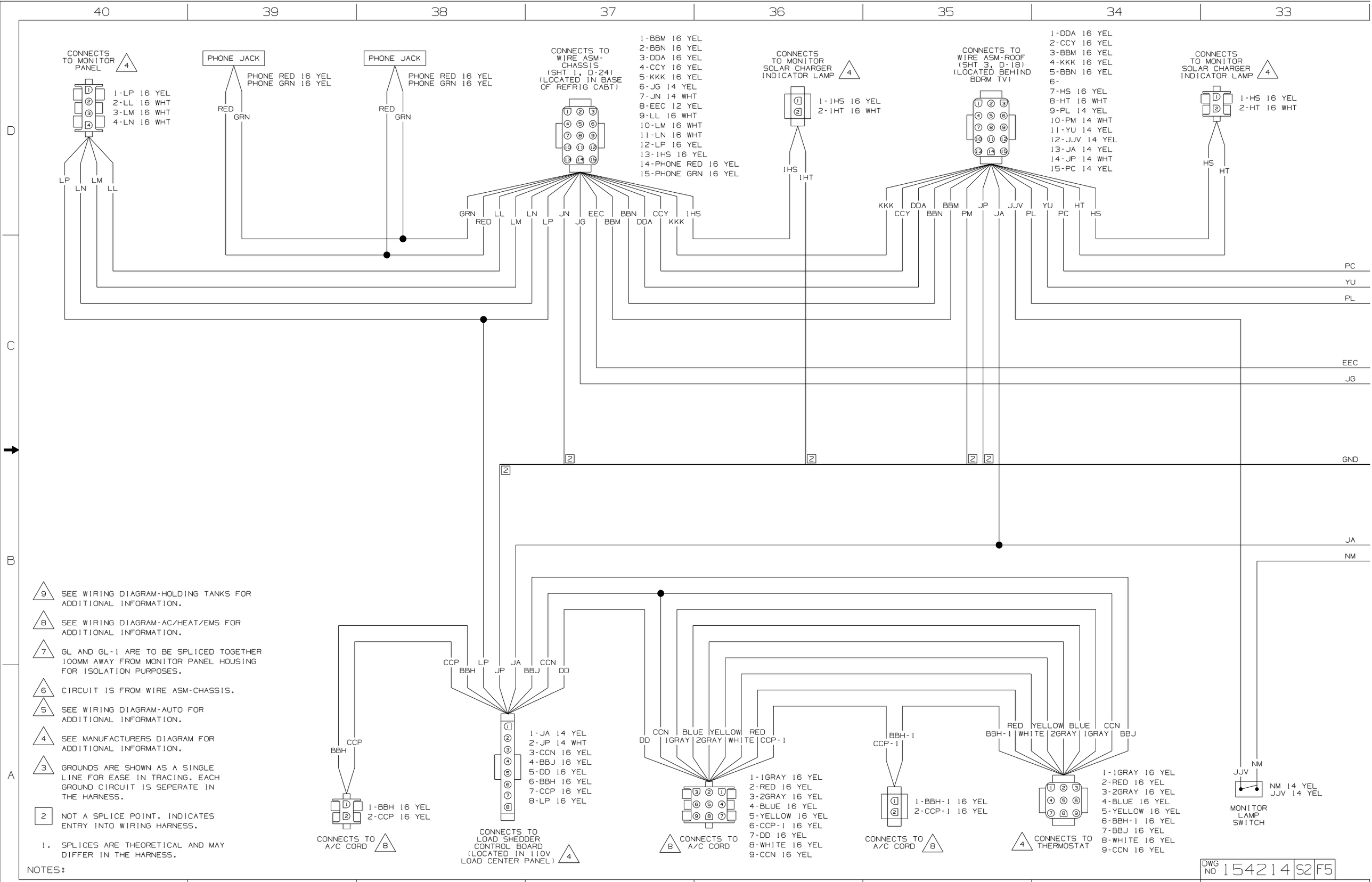
CONNECTS TO MONITOR PANEL 4
1-LP 16 YEL
2-LL 16 WHT
3-LM 16 WHT
4-LN 16 WHT
PHONE JACK
PHONE RED 16 YEL
PHONE GRN 16 YEL
RED
GRN
PHONE JACK
PHONE RED 16 YEL
PHONE GRN 16 YEL
RED
GRN
CONNECTS TO WIRE ASM-CHASSIS (SHT 1, D-24) (LOCATED IN BASE OF REFRIG CABT)
1-BBM 16 YEL
2-BBN 16 YEL
3-DDA 16 YEL
4-CCY 16 YEL
5-KKK 16 YEL
6-JG 14 YEL
7-JN 14 WHT
8-EEC 12 YEL
9-LL 16 WHT
10-LM 16 WHT
11-LN 16 WHT
12-LP 16 YEL
13-1HS 16 YEL
14-PHONE RED 16 YEL
15-PHONE GRN 16 YEL
CONNECTS TO MONITOR SOLAR CHARGER INDICATOR LAMP 4
1-1HS 16 YEL
2-1HT 16 WHT
1HS
1HT
CONNECTS TO WIRE ASM-ROOF (SHT 3, D-18) (LOCATED BEHIND BDRM TV)
1-DDA 16 YEL
2-CCY 16 YEL
3-BBM 16 YEL
4-KKK 16 YEL
5-BBN 16 YEL
6-
7-HS 16 YEL
8-HT 16 WHT
9-PL 14 YEL
10-PM 14 WHT
11-YU 14 YEL
12-JJV 14 YEL
13-JA 14 YEL
14-JP 14 WHT
15-PC 14 YEL
CONNECTS TO MONITOR SOLAR CHARGER INDICATOR LAMP 4
1-HS 16 YEL
2-HT 16 WHT
HS
HT
GRN RED LL LM LN LP JN JG EEC BBN BBM DDA CCY KKK 1HS
KKK CCY DDA BBN BBM PM JP JA JJV PL YU PC HT HS
LP LN LM LL
PC
YU
PL
EEC
JG
GND
JA
NM
CCP BBH LP JP JA BBJ CCN DD
BBH CCP
1-BBH 16 YEL
2-CCP 16 YEL
CONNECTS TO A/C CORD 8
1-JA 14 YEL
2-JP 14 WHT
3-CCN 16 YEL
4-BBJ 16 YEL
5-DD 16 YEL
6-BBH 16 YEL
7-CCP 16 YEL
8-LP 16 YEL
CONNECTS TO LOAD SHEDDER CONTROL BOARD (LOCATED IN 110V LOAD CENTER PANEL) 4
DD CCN 1GRAY BLUE 2GRAY YELLOW WHITE RED CCP-1
1-1GRAY 16 YEL
2-RED 16 YEL
3-2GRAY 16 YEL
4-BLUE 16 YEL
5-YELLOW 16 YEL
6-CCP-1 16 YEL
7-DD 16 YEL
8-WHITE 16 YEL
9-CCN 16 YEL
8 CONNECTS TO A/C CORD
BBH-1 CCP-1
1-BBH-1 16 YEL
2-CCP-1 16 YEL
CONNECTS TO A/C CORD 8
RED BBH-1 YELLOW WHITE BLUE 2GRAY CCN 1GRAY BBJ
1-1GRAY 16 YEL
2-RED 16 YEL
3-2GRAY 16 YEL
4-BLUE 16 YEL
5-YELLOW 16 YEL
6-BBH-1 16 YEL
7-BBJ 16 YEL
8-WHITE 16 YEL
9-CCN 16 YEL
4 CONNECTS TO THERMOSTAT
JJV NM
NM 14 YEL
JJV 14 YEL
MONITOR LAMP SWITCH
9 SEE WIRING DIAGRAM-HOLDING TANKS FOR ADDITIONAL INFORMATION.
8 SEE WIRING DIAGRAM-AC/HEAT/EMS FOR ADDITIONAL INFORMATION.
7 GL AND GL-1 ARE TO BE SPLICED TOGETHER 100MM AWAY FROM MONITOR PANEL HOUSING FOR ISOLATION PURPOSES.
6 CIRCUIT IS FROM WIRE ASM-CHASSIS.
5 SEE WIRING DIAGRAM-AUTO FOR ADDITIONAL INFORMATION.
4 SEE MANUFACTURERS DIAGRAM FOR ADDITIONAL INFORMATION.
3 GROUNDS ARE SHOWN AS A SINGLE LINE FOR EASE IN TRACING. EACH GROUND CIRCUIT IS SEPERATE IN THE HARNESS.
2 NOT A SPLICE POINT. INDICATES ENTRY INTO WIRING HARNESS.
1. SPLICES ARE THEORETICAL AND MAY DIFFER IN THE HARNESS.
NOTES:
DWG NO 154214 S2 F5

DWG NO 154214

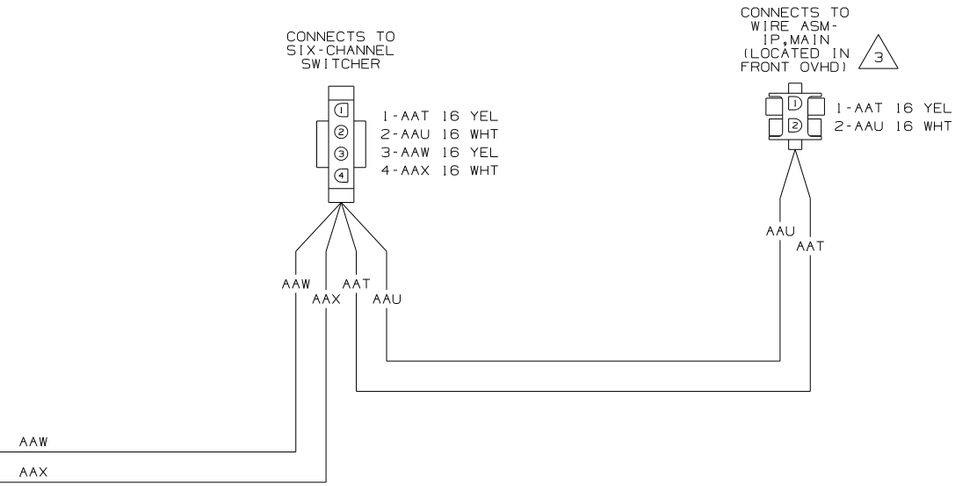

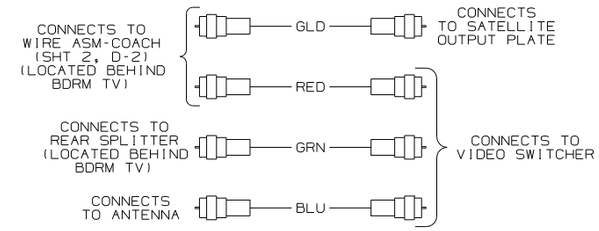

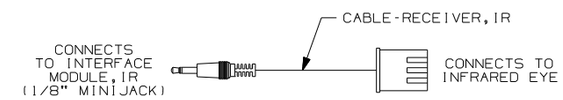

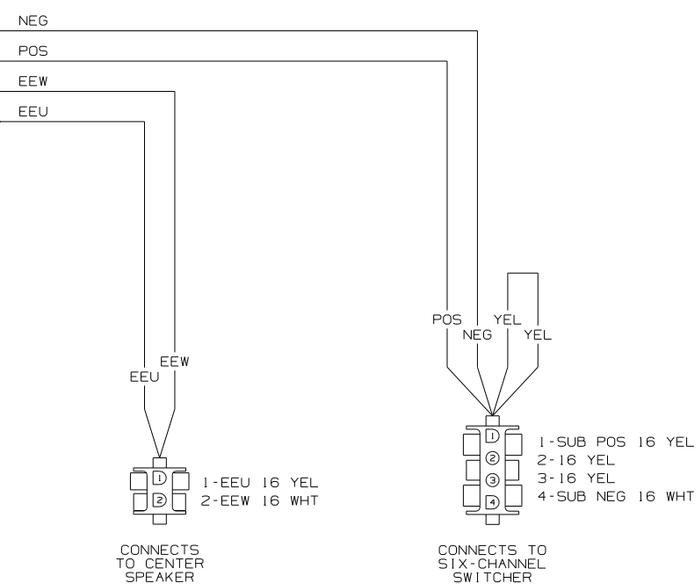

WIRING DIAGRAM-ROOF
(WIRE ASM 154213 REV-H)

FIRST USED 06 P39K

DO NOT SCALE DRAWING

TITLE: WIRING DIAGRAM-BODY,12V

F1 SHEET 3 PART NO 154214

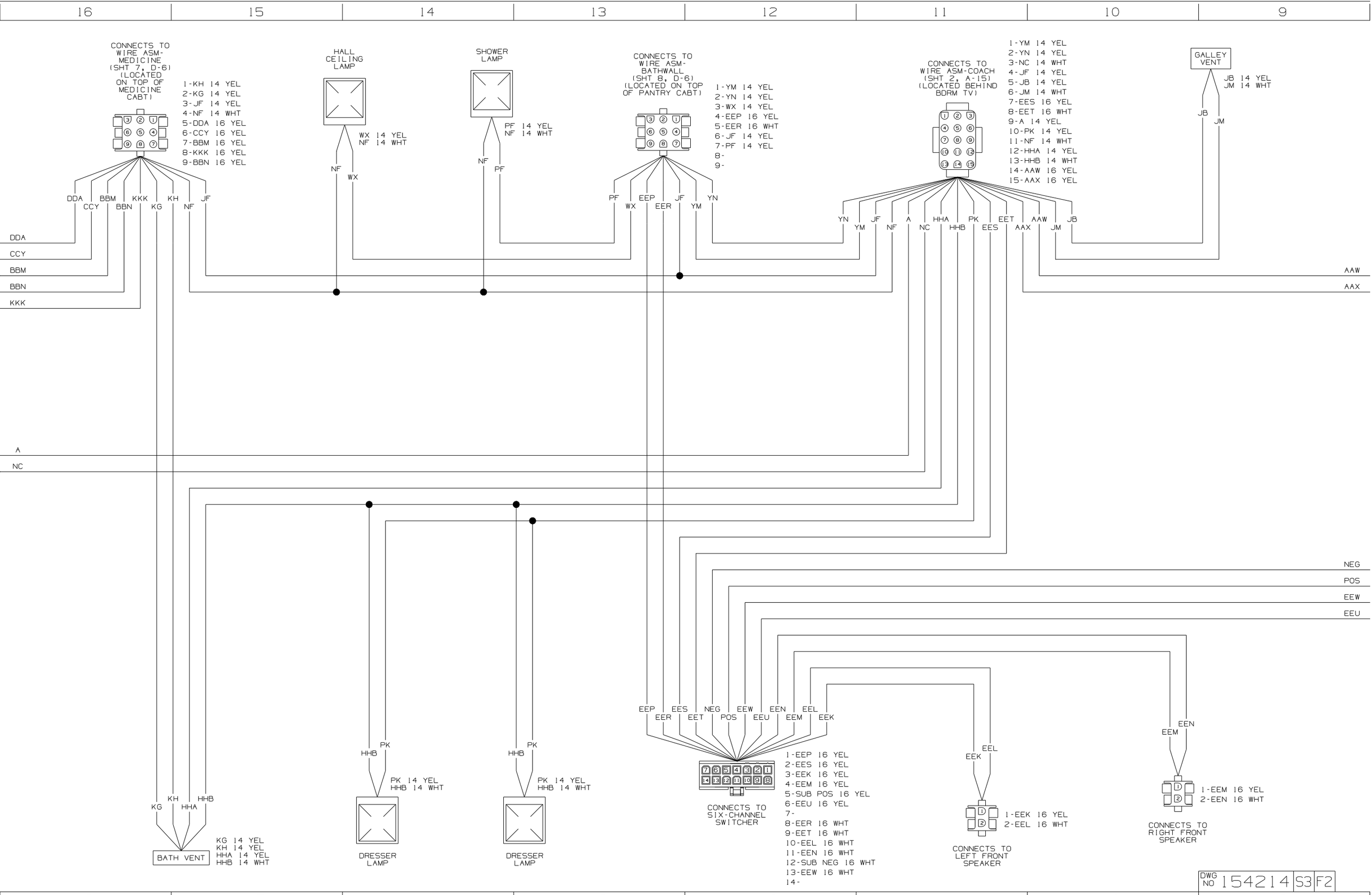
16
15
14
13
12
11
10
9
CONNECTS TO WIRE ASM-MEDICINE (SHT 7, D-6) (LOCATED ON TOP OF MEDICINE CABT)
1-KH 14 YEL
2-KG 14 YEL
3-JF 14 YEL
4-NF 14 WHT
5-DDA 16 YEL
6-CCY 16 YEL
7-BBM 16 YEL
8-KKK 16 YEL
9-BBN 16 YEL
DDA CCY BBM BBN KKK KG KH NF JF
HALL CEILING LAMP
WX 14 YEL
NF 14 WHT
NF WX
SHOWER LAMP
PF 14 YEL
NF 14 WHT
NF PF
CONNECTS TO WIRE ASM-BATHWALL (SHT 8, D-6) (LOCATED ON TOP OF PANTRY CABT)
1-YM 14 YEL
2-YN 14 YEL
3-WX 14 YEL
4-EEP 16 YEL
5-EER 16 YEL
6-JF 14 YEL
7-PF 14 YEL
8-
9-
PF WX EEP EER JF YM YN
CONNECTS TO WIRE ASM-COACH (SHT 2, A-15) (LOCATED BEHIND BDRM TV)
1-YM 14 YEL
2-YN 14 YEL
3-NC 14 WHT
4-JF 14 YEL
5-JB 14 YEL
6-JM 14 WHT
7-EES 16 YEL
8-EET 16 WHT
9-A 14 YEL
10-PK 14 YEL
11-NF 14 WHT
12-HHA 14 YEL
13-HHB 14 WHT
14-AAW 16 YEL
15-AAX 16 YEL
YN YM JF NF A NC HHA HHB PK EES EET AAX AAW JM JB
GALLEY VENT
JB 14 YEL
JM 14 WHT
JB JM
DDA
CCY
BBM
BBN
KKK
A
NC
AAW
AAX
NEG
POS
EEW
EEU
KG KH HHA HHB
BATH VENT
KG 14 YEL
KH 14 YEL
HHA 14 YEL
HHB 14 WHT
HHB PK
PK 14 YEL
HHB 14 WHT
DRESSER LAMP
HHB PK
PK 14 YEL
HHB 14 WHT
DRESSER LAMP
EEP EER EES EET NEG POS EEW EEU EEN EEM EEL EEK
1-EEP 16 YEL
2-EES 16 YEL
3-EEK 16 YEL
4-EEM 16 YEL
5-SUB POS 16 YEL
6-EEU 16 YEL
7-
8-EER 16 WHT
9-EET 16 WHT
10-EEL 16 WHT
11-EEN 16 WHT
12-SUB NEG 16 WHT
13-EEW 16 WHT
14-
CONNECTS TO SIX-CHANNEL SWITCHER
EEK EEL
1-EEK 16 YEL
2-EEL 16 WHT
CONNECTS TO LEFT FRONT SPEAKER
EEM EEN
1-EEM 16 YEL
2-EEN 16 WHT
CONNECTS TO RIGHT FRONT SPEAKER
DWG NO 154214 S3 F2
8/18/2005 42

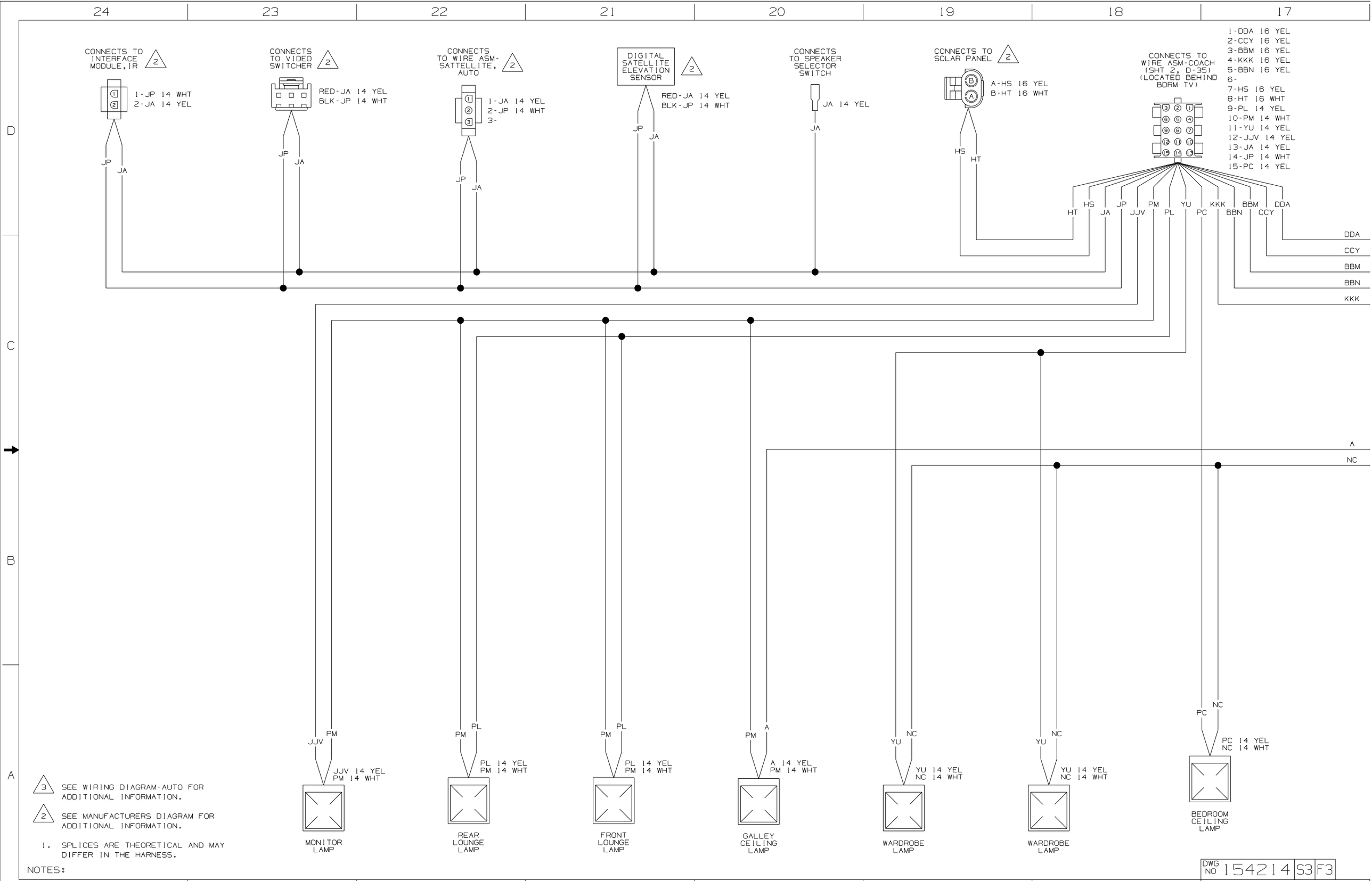
CONNECTS TO INTERFACE MODULE, IR
1-JP 14 WHT
2-JA 14 YEL
CONNECTS TO VIDEO SWITCHER
RED-JA 14 YEL
BLK-JP 14 WHT
CONNECTS TO WIRE ASM-SATTELLITE, AUTO
1-JA 14 YEL
2-JP 14 WHT
3-
DIGITAL SATELLITE ELEVATION SENSOR
RED-JA 14 YEL
BLK-JP 14 WHT
CONNECTS TO SPEAKER SELECTOR SWITCH
JA 14 YEL
CONNECTS TO SOLAR PANEL
A-HS 16 YEL
B-HT 16 WHT
CONNECTS TO WIRE ASM-COACH (SHT 2, D-35) (LOCATED BEHIND BDRM TV)
1-DDA 16 YEL
2-CCY 16 YEL
3-BBM 16 YEL
4-KKK 16 YEL
5-BBN 16 YEL
6-
7-HS 16 YEL
8-HT 16 WHT
9-PL 14 YEL
10-PM 14 WHT
11-YU 14 YEL
12-JJV 14 YEL
13-JA 14 YEL
14-JP 14 WHT
15-PC 14 YEL
JJV 14 YEL
PM 14 WHT
PL 14 YEL
PM 14 WHT
A 14 YEL
PM 14 WHT
YU 14 YEL
NC 14 WHT
PC 14 YEL
NC 14 WHT
MONITOR LAMP
REAR LOUNGE LAMP
FRONT LOUNGE LAMP
GALLEY CEILING LAMP
WARDROBE LAMP
WARDROBE LAMP
BEDROOM CEILING LAMP
SEE WIRING DIAGRAM-AUTO FOR ADDITIONAL INFORMATION.
SEE MANUFACTURERS DIAGRAM FOR ADDITIONAL INFORMATION.
1. SPLICES ARE THEORETICAL AND MAY DIFFER IN THE HARNESS.
NOTES:
DWG NO 154214 S3 F3

DWG NO 154214

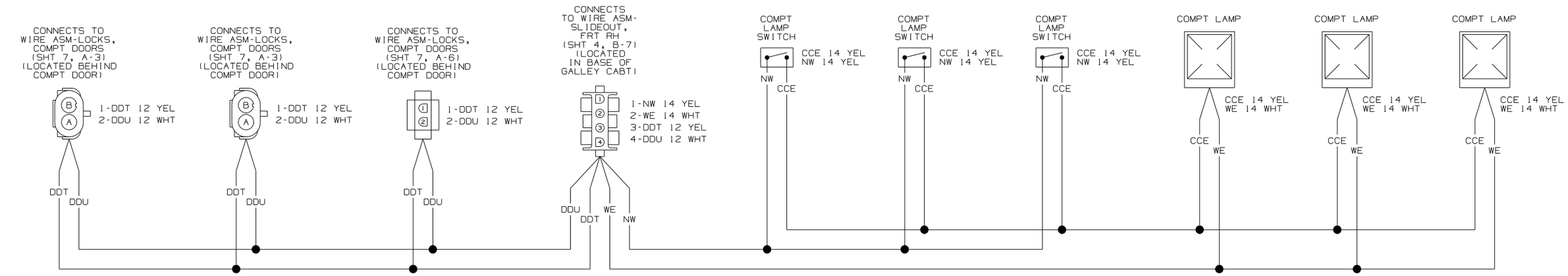

WIRING DIAGRAM-SLIDEOUT COMPT
(WIRE ASM 154424 REV-C)

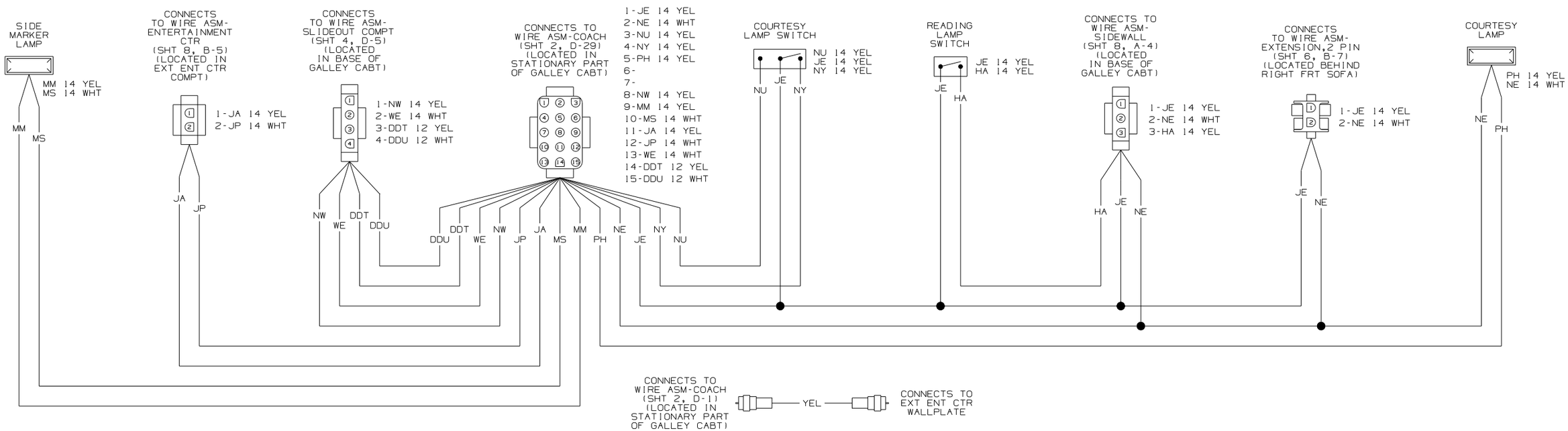

WIRING DIAGRAM-SLIDEOUT,FRT RH
(WIRE ASM 147569-02 REV-D)

NOTES:

1. SPLICES ARE THEORETICAL AND MAY DIFFER IN THE HARNESS.

FIRST USED	06 P39K
	DO NOT SCALE DRAWING
TITLE:	WIRING DIAGRAM-BODY,12V
SHEET 4	PART NO 154214

DWG NO 154214

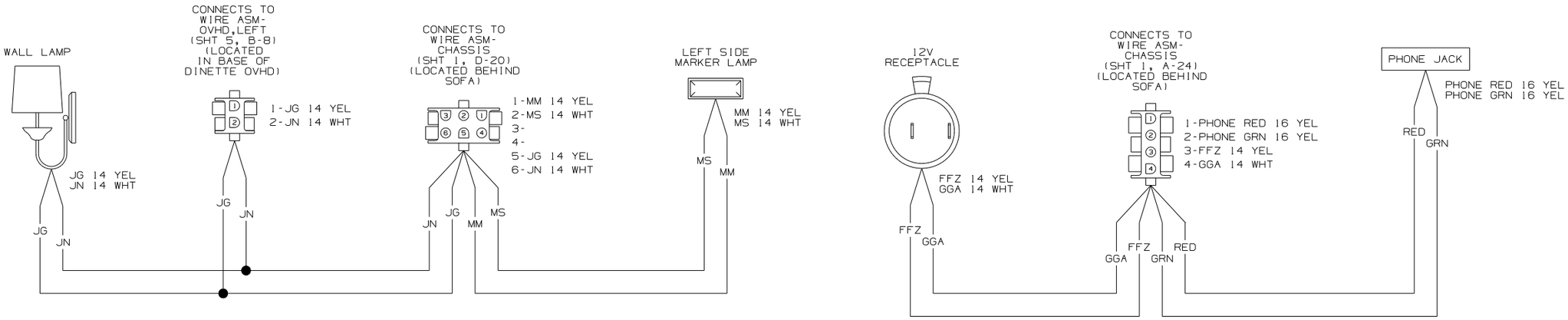

WIRING DIAGRAM-SIDEWALL,LEFT
(WIRE ASM 154529 REV-A)

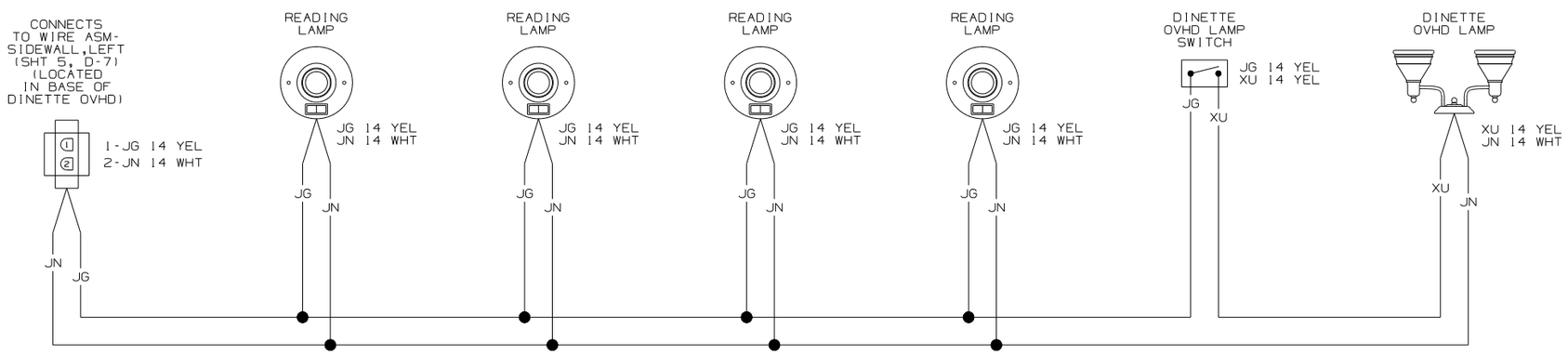

WIRING DIAGRAM-OVHD,LEFT
(WIRE ASM 153910 REV-A)

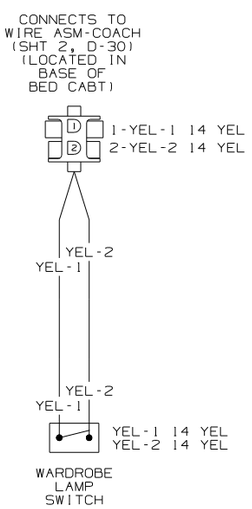

WIRING DIAGRAM-EXTENSION,2 PIN
(WIRE ASM 147579-01 REV-A)

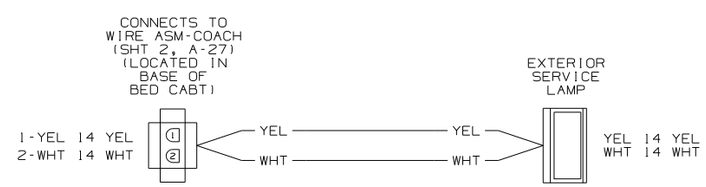

WIRING DIAGRAM-EXTENSION,2 PIN
(WIRE ASM 133572-01 REV-F)

NOTES:

1. SPLICES ARE THEORETICAL AND MAY DIFFER IN THE HARNESS.

FIRST USED	06 P39K
	DO NOT SCALE DRAWING
TITLE:	WIRING DIAGRAM-BODY,12V
SHEET 5	PART NO 154214

DWG NO 154214

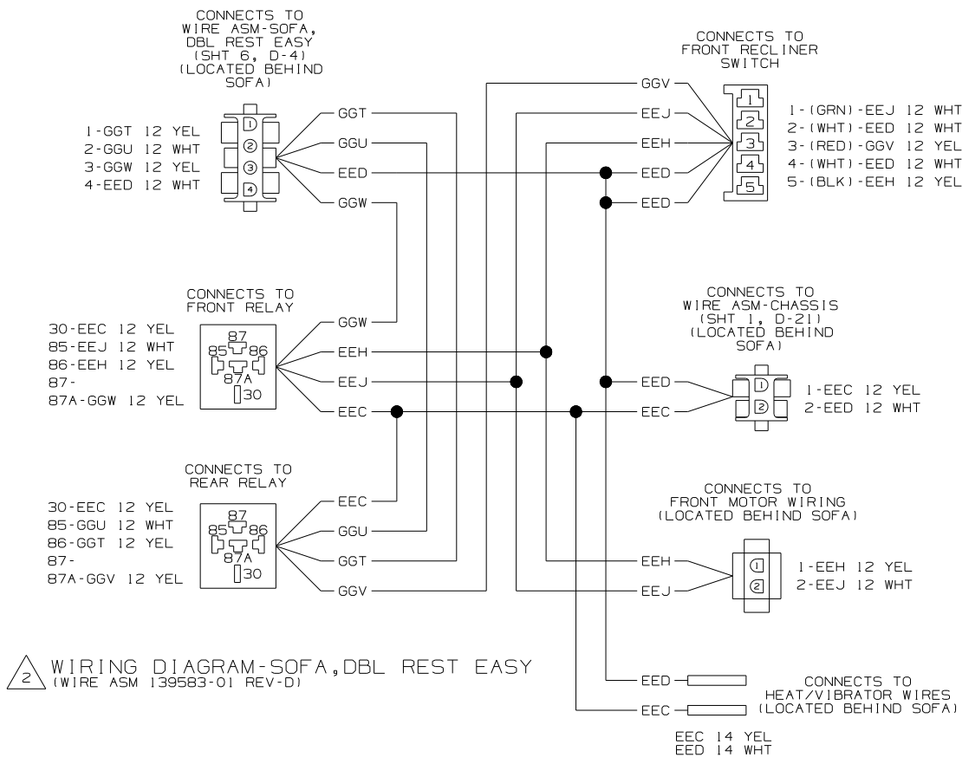

2 WIRING DIAGRAM-SOFA,DBL REST EASY
(WIRE ASM 139583-01 REV-D)

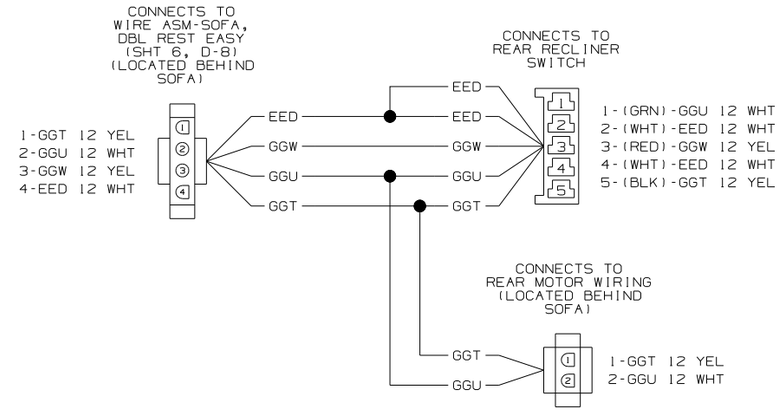

2 WIRING DIAGRAM-SOFA,DBL REST EASY
(WIRE ASM 139583-02 REV-D)

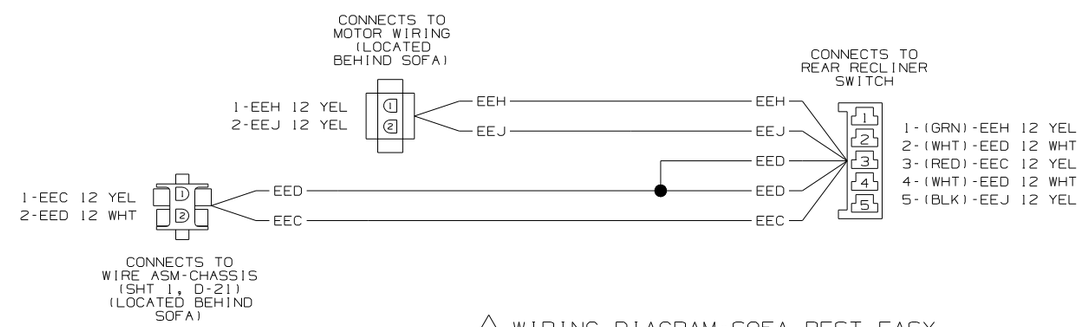

2 WIRING DIAGRAM-SOFA,REST EASY
(WIRE ASM 136028-01 REV-A)

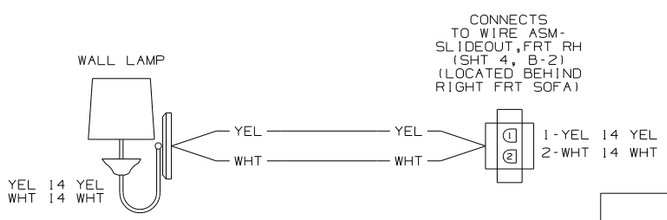

WIRING DIAGRAM-EXTENSION,2 PIN
(WIRE ASM 133572-01 REV-F)

2 SEE MANUFACTURERS DIAGRAM FOR ADDITIONAL INFORMATION.

1. SPLICES ARE THEORETICAL AND MAY DIFFER IN THE HARNESS.

NOTES:

FIRST USED	06 P39K
DO NOT SCALE DRAWING	
TITLE: WIRING DIAGRAM-BODY,12V	
SHEET 6	PART NO 154214

DWG NO 154214

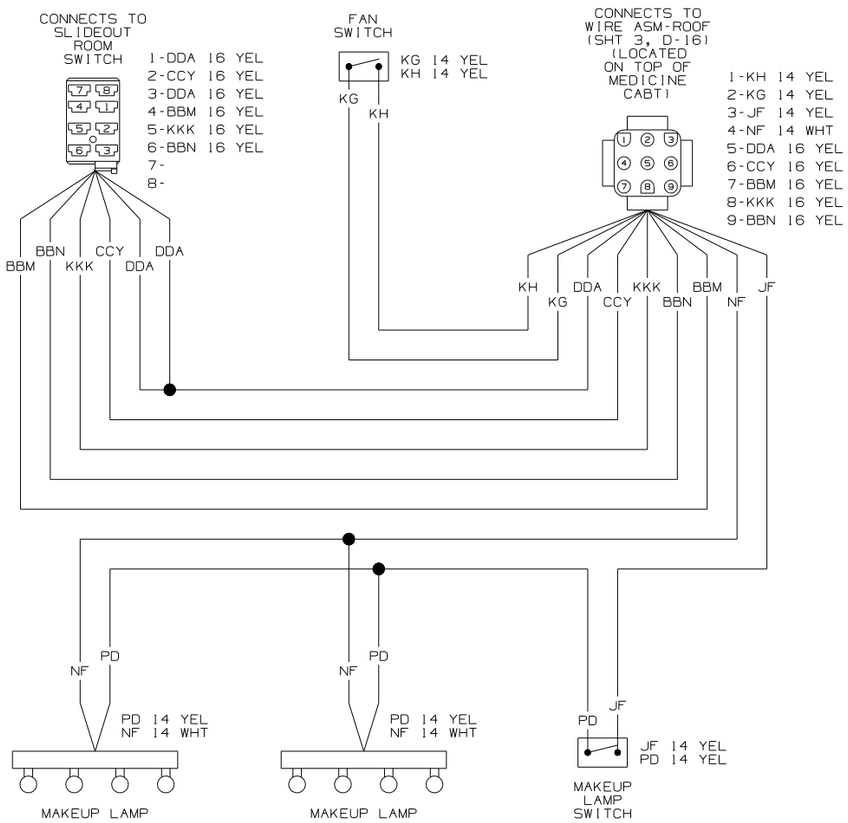

WIRING DIAGRAM-MEDICINE
(WIRE ASM 147555 REV-A)

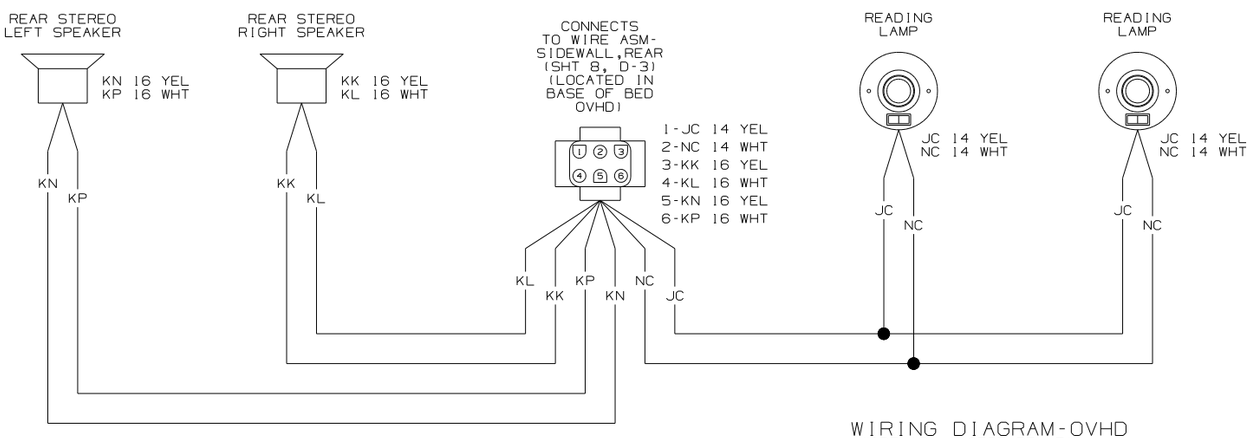

WIRING DIAGRAM-OVHD
(WIRE ASM 140727 REV-E)

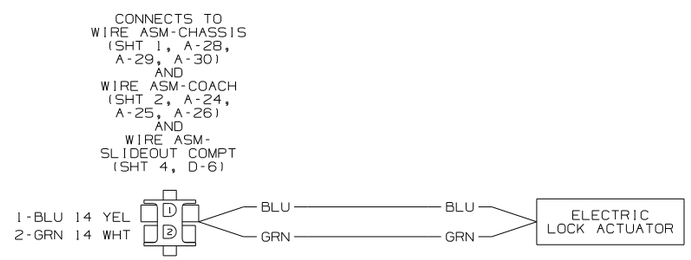

WIRING DIAGRAM-LOCKS,COMPT DOORS
(WIRE ASM 135834-02 REV-J)

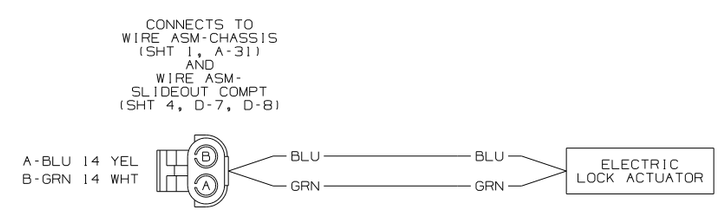

WIRING DIAGRAM-LOCKS,COMPT DOORS
(WIRE ASM 135834-03 REV-J)

NOTES:

1. SPLICES ARE THEORETICAL AND MAY DIFFER IN THE HARNESS.

2 SEE MANUFACTURERS DIAGRAM FOR ADDITIONAL INFORMATION.

FIRST USED	06 P39K
DO NOT SCALE DRAWING	
TITLE: WIRING DIAGRAM-BODY,12V	
SHEET 7	PART NO 154214

DWG NO 154214

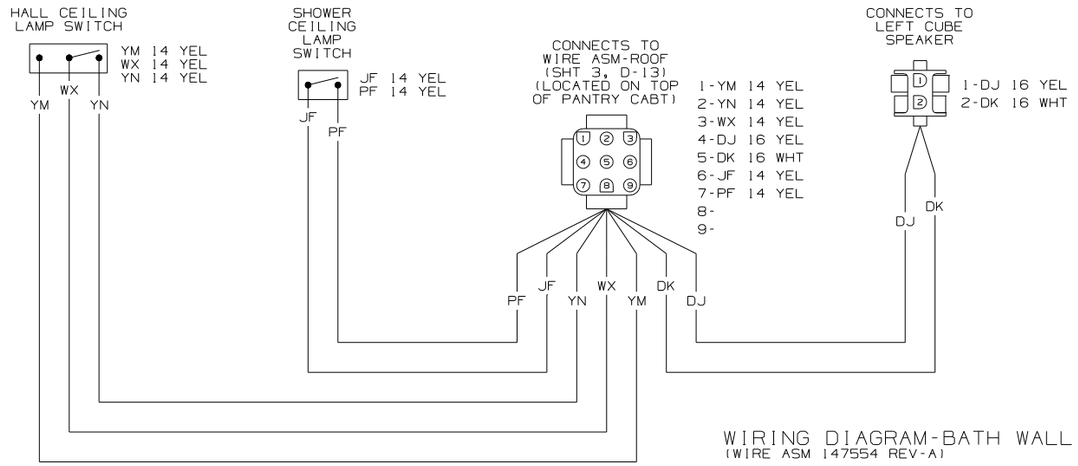

WIRING DIAGRAM-BATH WALL
(WIRE ASM 147554 REV-A)

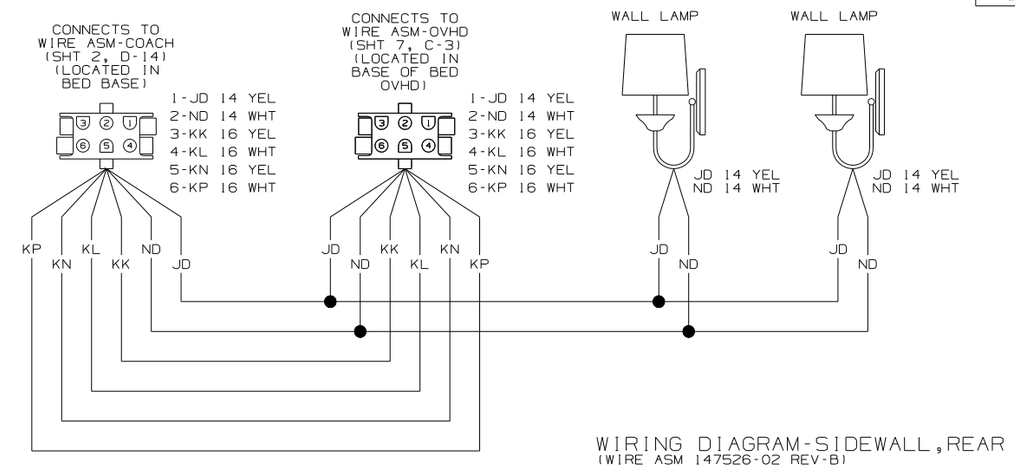

WIRING DIAGRAM-SIDEWALL,REAR
(WIRE ASM 147526-02 REV-B)

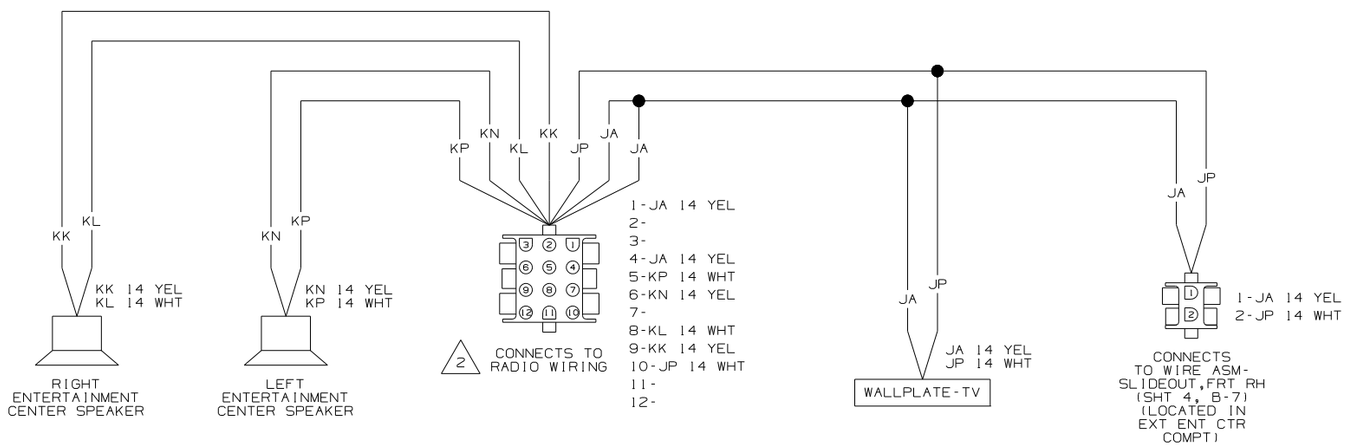

WIRING DIAGRAM-ENTERTAINMENT CTR
(WIRE ASM 125853-04 REV-L)

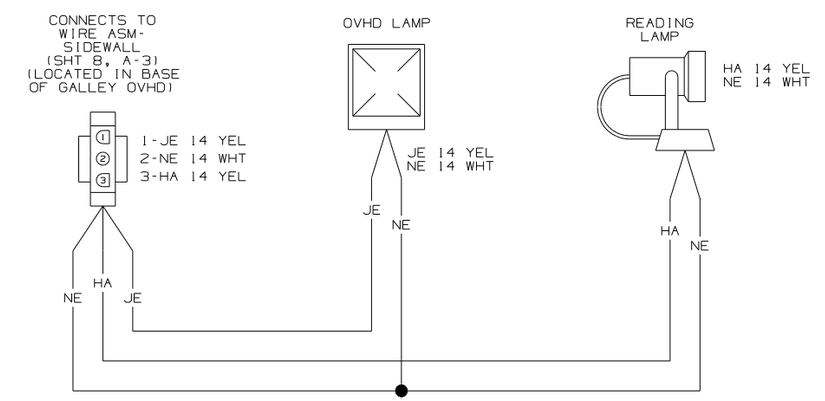

WIRING DIAGRAM-OVHD
(WIRE ASM 153907 REV-A)

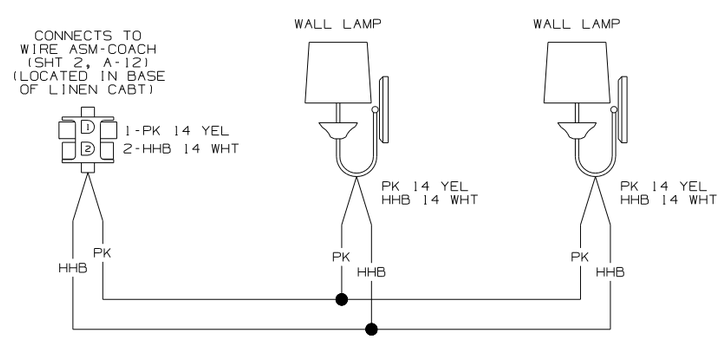

WIRING DIAGRAM-SIDEWALL,RR
(WIRE ASM 147593-01 REV-C)

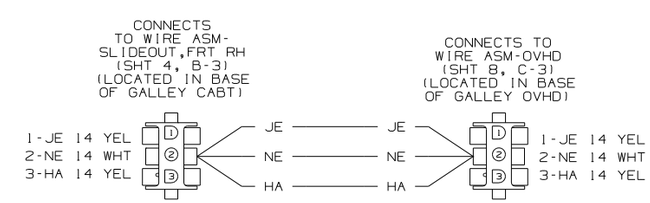

WIRING DIAGRAM-SIDEWALL
(WIRE ASM 147592-02 REV-B)

NOTES:

1. SPLICES ARE THEORETICAL AND MAY DIFFER IN THE HARNESS.

2 SEE MANUFACTURERS DIAGRAM FOR ADDITIONAL INFORMATION.

FIRST USED	06 P39K
DO NOT SCALE DRAWING	
TITLE: WIRING DIAGRAM-BODY,12V	
SHEET 8	PART NO 154214

DWG NO 154214

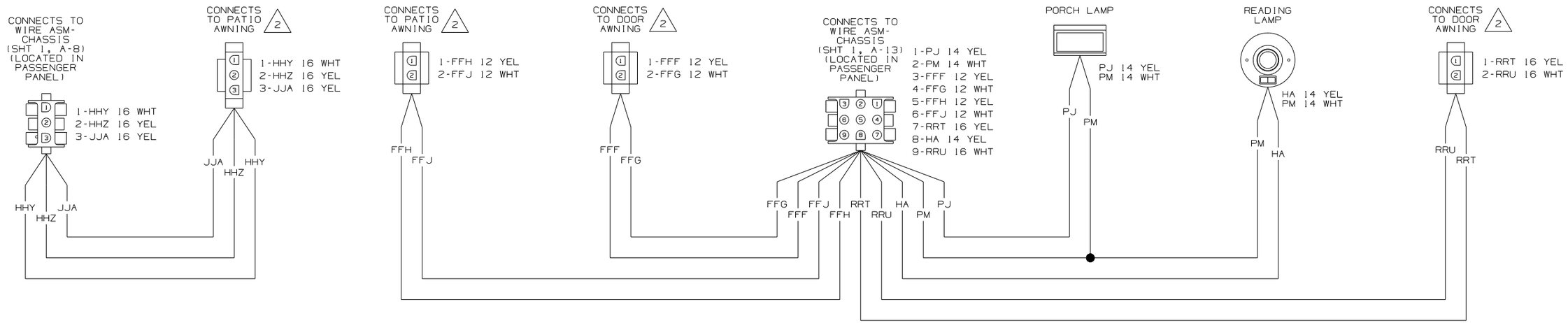

WIRING DIAGRAM-SIDEWALL
(WIRE ASM 156294 REV-A)

NOTES:

1. SPLICES ARE THEORETICAL AND MAY DIFFER IN THE HARNESS.

2 SEE MANUFACTURERS DIAGRAM FOR ADDITIONAL INFORMATION.

FIRST USED	06 P39K
DO NOT SCALE DRAWING	
TITLE: WIRING DIAGRAM-BODY,12V	
SHEET 9	PART NO 154214

DRAWING NO.	FEATURE
154196-01	WIN
154196-02	ITA

RELEASE	REV	DATE	DWG NO
	A		154196

REV	ZONE	REVISION RECORD	DATE	DFTR-ORIG

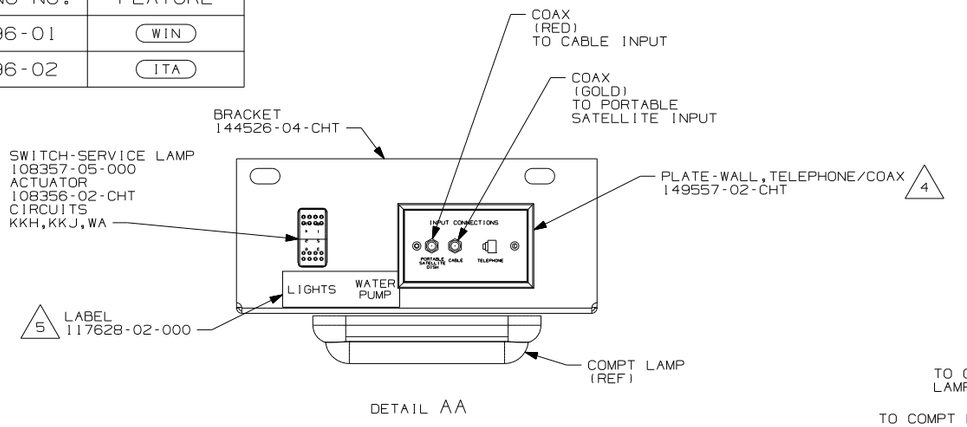

DETAIL AA

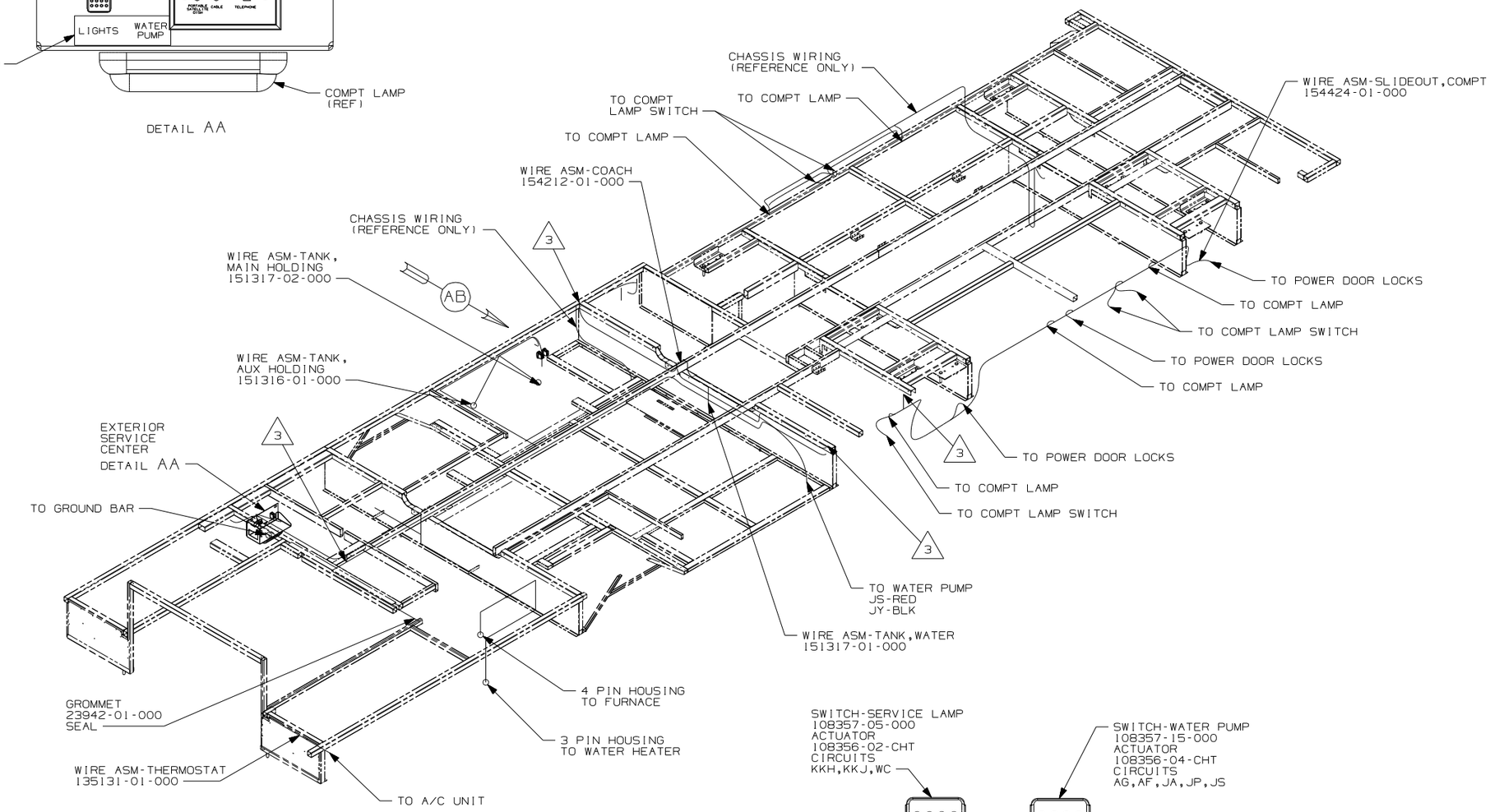

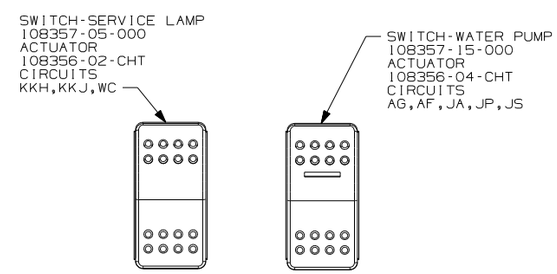

VIEW AB

ITA ITASCA ONLY

WIN WINNEBAGO ONLY

265 CODES/STANDARDS-CSA/CMVSS

IBI CODES/STANDARDS USA

5 CUT LABEL IN HALF AND MOVE WATER PUMP PORTION UNDER SWITCH IN WATER CENTER PANEL.

4 CONNECT TELEPHONE WIRES TO MATCHING COLORS ON PLATE-TELEPHONE.

3 WIRE PASSES THROUGH FLOOR AT THIS POINT.

2. CLAMP TO FLOOR SUPPORT TUBES AS NECESSARU WITH CLAMP 10497-01-000.

1. ALL WIRES TO BE SECURED WITH CLAMP 10495 OR 10497 OR WIRE TIE 8343 OR 108046 EVERY 600MM, USE SCREW G67-XX-XXX OR G56-XX-XXX AS APPROPRIATE FOR INTALLATION.

NOTES:

FOR ELECTRICAL TORQUE SPECIFICATIONS SEE DWG NO. 128783-01-000

X-X FOR ELECTRICAL CALLOUTS SEE DWG NO. 121339-01-000

IBI 265

WINNEBAGO INDUSTRIES

DFTR	ORIG. DATE
CHKR	ALL DIMENSIONS ARE IN MILLIMETERS
P.E.	
M.E.	FIRST USED 06 P39K
DSNR	

UNSPECIFIED TOLERANCES ARE:

WHOLE DIM (X)	:	3
ONE-PLACE (X.X)	:	1.5
TWO-PLACE (X.XX)	:	0.50
ANGLE	:	1°

MATERIAL:

THIRD ANGLE PROJECTION

DO NOT SCALE DRAWING

TITLE: WIRING INSTL-BODY,12V

SHEET 1 OF 7 | PART NO 154196 | REV

DWG NO 154196

STUD-ISOLATED
86233-01-000
NUT
D34-06-00B
SCREW
G67-10-12B (2)
BOOT
77479-02-000

WIRES L,U & K
TAPE BACK TO
MAIN ASSEMBLY

M

J

TO WIRE ASM-COACH

TO WIRE ASM-CHASSIS

DETAIL BA (13X)

TO WIRE ASM-SIDEWALL

TO WIRE ASM-OVHD
153910-01-000

WIN / ITA
LAMP-WALL
119258-44-CHT
119258-35-CHT
BULB
117805-02-000
SCREW
G67-10-24J (2)
CONNECTOR
58028-01-000 (2)

WIN / ITA
LAMP-CEILING
93575-35-CHT
93575-23-CHT
BULB
117805-02-000 (2)
SCREW
G67-10-24J (2)
CONNECTOR
58028-01-000 (2)

LAMP-READING
132427-01-CHT (4)
SCREW
G13-06-16U (8)
CONNECTOR
58028-01-000 (8)

SPEAKER-CUBE
148026-03-CHT
GRILLE
148026-02-CHT
SCREW
G11-08-08U (4)

SWITCH
DETAIL DB

WIN
LAMP-WALL
119258-45-CHT (2)
SHADE
119257-16-CHT (2)
BULB
117805-02-000 (4)

ITA
LAMP-WALL
119258-37-CHT (2)
SHADE
119257-18-CHT (2)
BULB
67479-01-000 (4)
SCREW
G67-10-24J (4)
CONNECTOR
58028-01-000 (4)

25E
SPEAKER
94097-01-000 (2)
GRILL
90026-01-CHT (2)
SCREW
G11-08-08B (8)

LMU4-2
2

LAMP-READING
132427-01-CHT (2)
SCREW
G13-06-16U (4)
CONNECTOR
58028-01-000 (4)

WIRE ASM-OVHD
140727-01-000

SWITCH-PUSH BUTTON
41250-01-000
SCREW
G39-08-16E (2)

RECPTACLE 12V
SEE DETAIL BB

25E
RADIO
133307-02-000
SCREW
76790-03-000 (4)
SPACER-RECEPTACLE
26K 133713-06-CHT

2 PIN HOUSING
TO WIRE ASM-SIDEWALL

4 PLATE-WALL,TELEPHONE
93253-01-CHT

2 PIN HOUSING
TO WIRE ASM-SIDEWALL
(WARDROBE LAMP SWITCH)

2 PIN HOUSING
TO WIRE ASM-SIDEWALL
(EXTERIOR LAMP)

LCS-1

6 & 4 PIN HOUSING FROM
WIRE ASM-CHASSIS
TO WIRE ASM-SIDEWALL

2 PIN HOUSING FROM
WIRE ASM-CHASSIS
TO WIRE ASM-SOFA

SWITCH
DETAIL DD

WALL-PLATE,TELEPHONE
93253-01-CHT
SCREW
G11-08-12B (2)
RECPTACLE-12V
DETAIL BB
4

WIRE ASM-BATH WALL
147554-01-000

SWITCHES
DETAIL DC

LPGD

CONVERTER
DETAIL BA

3

12V BREAKER PANEL
DETAIL EB

SWITCHES
DETAIL DA

SPEAKER
150090-01-000
GRILLE
151569-01-CHT
SCREW
G11-08-16T (4)

WIRE ASM-MEDICINE
147555-02-000

4 & 8 PIN HOUSINGS
TO EMS BOARD

RECEPTACLE-12V
132958-01-000

FFZ

GGA

DETAIL BB

CONVERTER - 55 AMP
123058-01-000
SCREW
G67-10-12U (4)

STUD-ISOLATED
86233-01-000
NUT
D34-06-00B
SCREW
G67-10-12B (2)
BOOT
77479-02-000

K

J

M

L

U

TO GROUND BAR

FROM 12V
BREAKER PANEL

FROM WIRE
ASM-CHASSIS

DETAIL BA (40D)

40D INVERTER-DC/AC,600 WATT
13X INVERTER/CHARGER 2.0 KW
25E STEREO SYSTEM W/CD REAR
ITA ITASCA ONLY
WIN WINNEBAGO ONLY
265 CODES/STANDARDS-CSA/CMVSS
1B1 CODES/STANDARDS USA

1B1 265

4 CONNECT TELEPHONE WIRES TO MATCHING COLORS ON PLATE-TELEPHONE.

3 WIRE PASSES THROUGH FLOOR AT THIS POINT.

2. SEE WIRING DIAGRAM-BODY,12V FOR ADDITIONAL INFORMATION.

1. ALL WIRES TO BE SECURED WITH CLAMP 10495 OR 10497 OR WIRE TIE 8343 OR 108046 EVERY 600MM, USE SCREW G67-XX-XXX OR G56-XX-XXX AS APPROPRIATE FOR INTALLATION.

NOTES:

FOR ELECTRICAL TORQUE SPECIFICATIONS SEE DWG NO. 128783-01-000

X-X FOR ELECTRICAL CALLOUTS SEE DWG NO. 121339-01-000

FIRST USED 06 P39K

DO NOT SCALE DRAWING

TITLE: WIRING INSTL-BODY,12V

SHEET 2 PART NO 154196 REV

DWG NO 154196

WIN — LAMP-WALL 119258-44-CHT
ITA — 119258-35-CHT
BULB 117805-02-000
SCREW G67-10-24J (2)
CONNECTOR 58028-01-000 (2)

LIGHT-DESIGNER 128786-02-CHT
SCREW G67-08-12J (2)
CONNECTOR 58028-01-000 (2)

WIRE ASM-OVHD 153907-01-000

FLU-7

TO WIRE ASM-SIDEWALL

SPEAKER-CUBE 148026-03-CHT
GRILLE 148026-02-CHT
SCREW G11-08-08U (4)

15 PIN HSGS (2)
4 PIN HSG TO ROOF

JP ANTENNA GRND

SWITCH DETAIL DL

HAL

SWITCH DETAIL DF

SWITCH DETAIL DG

SWITCHES DETAIL DH

SWITCH DETAIL DJ

SWITCHES DETAIL DK

EB

DETAIL CC

TWO PIN HSG TO WIRE ASM IN END WALL

SWITCHES DETAIL DE

ENT CTR COMPL. 144818-03-000

MONITOR PANEL 133004-05-CHT
SCREW G11-08-08U (6)

4 & 15 PIN HSGS TO MONITOR PANEL

4 PIN HSG TO LOAD METER

3 & 9 PIN HSGS TO THEMOSTAT DETAIL CB

1E3 — PANEL-MONITOR EMS 127002-10-000
SCREW G13-06-061 (2)

LCS-1

THERMOSTAT-A/C & FURNACE 105620-18-000
GASKET-THERM 134588-09-000 (7)

3

ADAPTOR 82134-01-000 FOR YEL COAX SLIDEOUT TO COACH CONNECTION

WIRE ASM-SLIDEOUT 147569-02-000

MM,MS TO SIDEMARKER LIGHT

LCS-1

2 PIN HSG TO SIDEWALL — 43W

13X — REMOTE PANEL INVERTER/CHARGER 148254-05-000 (6)
CABLE ASM-MODULATOR JACK 50' 148254-03-000
CONDUIT 41953-09-000 (7000)

40D — REMOTE PANEL INVERTER/CHARGER 154511-02-000
CABLE ASM-MODULATOR JACK 50' 148254-03-000
CONDUIT 41953-09-000 (7000)

LAMP-WALL 119258-45-CHT (2)
SHADE 119257-16-CHT (2)
BULB 117805-02-000 (4)
WIN — 43W

LAMP-WALL 119258-37-CHT (2)
SHADE 119257-18-CHT (2)
BULB 67479-01-000 (4)
ITA — 43W

SCREW G67-10-24J (4)
CONNECTOR 58028-01-000 (4)

RECEIVER-INFRARED 149750-01-000

RED & YEL COAX TO ROOF DETAIL CA

SWITCH-PUSH BUTTON 41250-01-000
SCREW G39-08-16E (2)

ROUTE WIRES THRU HOLE

JAMB-DOOR

GROMMET 8386-01-000

5

4

SWITCH/MAGNET-STEP, ELECTRIC 116995-03-000
SCREW G11-06-08B (4)

DETAIL CC

GOLD FROM ROOF — RED FROM ROOF — GRN FROM ROOF

ADAPTOR 82134-01-000 (2)

SPLITTER 86756-01-000
SCREW G11-08-12B (2)

COAX CABLE 87105-01-012

GOLD FROM COACH — RED FROM COACH — YEL FROM COACH — TO TV

DETAIL CA

THERMOSTAT WIRING

9 PIN HOUSINGS

3 PIN HOUSING

WIRE ASM-COACH

WIRE ASM-THERMOSTAT

2 PIN HOUSING

DETAIL CB

43W CABINET-LAVATORY
43V CABINET-CHEST OF DRAWERS
13X INVERTER/CHARGER 2.0 KW
1E3 ENERGY MANAGEMENT SYSTEM
ITA ITASCA ONLY
WIN WINNEBAGO ONLY
265 CODES/STANDARDS-CSA/CMVSS
1B1 CODES/STANDARDS USA

6 CONNECT CIRCUIT WB FROM COACH WIRING TO RED WIRE ON REMOTE PANEL.

5 MOUNT SWITCH AND SPACER TO BLOCK ON JAMB ADJUST HEIGHT TO MATCH MAGNET.

4 MOUNT MAGNET USING PILOT HOLES IN SCREEN DOOR FRAME. MOUNT WITH MAGNET TOWARD SWITCH.

3 WIRE PASSES THROUGH FLOOR AT THIS POINT.

2. SEE WIRING DIAGRAM-BODY,12V FOR ADDITIONAL INFORMATION.

1. ALL WIRES TO BE SECURED WITH CLAMP 10495 OR 10497 OR WIRE TIE 8343 OR 108046 EVERY 600MM, USE SCREW G67-XX-XXX OR G56-XX-XXX AS APPROPRIATE FOR INTALLATION.

7 INSTALL GASKET ON BACK SIDE OF ONE PLACE AFTER INSTALLATION OF THERMOSTAT, MAKING SURE THAT THE GASKET COVERS AND SEALS THE HOLE THAT THE WIRES PASS THROUGH.

NOTES:

FOR ELECTRICAL TORQUE SPECIFICATIONS SEE DWG NO. 128783-01-000

X-X — FOR ELECTRICAL CALLOUTS SEE DWG NO. 121339-01-000

1B1 265

FIRST USED 06 P39K

DO NOT SCALE DRAWING

TITLE: WIRING INSTL-BODY,12V

SHEET 3 — PART NO 154196 — REV

DWG NO 154196

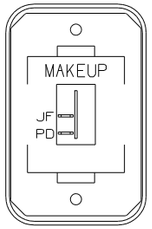

SWITCH-ROCKER
135740-01-CHT
SWITCH-BASE
135741-01-CHT
SWITCH-BEZEL
135742-08-CHT
SCREW
G11-08-08U (2)

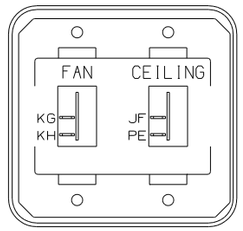

SWITCH-ROCKER
135740-01-CHT (2)
SWITCH-BASE
135741-02-CHT
SWITCH-BEZEL
135742-33-CHT
SCREW
G11-08-08U (4)

DETAIL DA

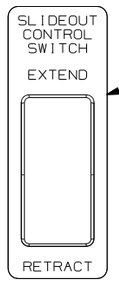

PLATE-SWITCH
144363-09-CHT
SWITCH
108357-06-000
ACTUATOR
108356-02-CHT
NUT
D65-08-00B (2)
LABEL
116220-01-000

WARNING

UNDERSTAND OPERATOR'S MANUAL BEFORE USING KEEP PEOPLE AND OBSTRUCTIONS CLEAR OF SLIDEOUT ROOM WHEN OPERATING TO AVOID INJURY AND/OR PROPERTY DAMAGE

LABEL-WARNING
116549-02-000

DETAIL DB
(FRONT VIEW)

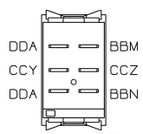

DETAIL DB
(REAR VIEW)

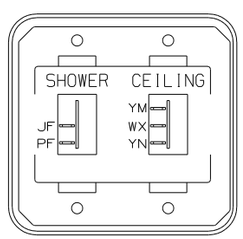

SWITCH-ROCKER
135740-01-CHT
135740-02-CHT
SWITCH-BASE
135741-02-CHT
SWITCH-BEZEL
135742-15-CHT
SCREW
G11-08-08U (4)

DETAIL DC

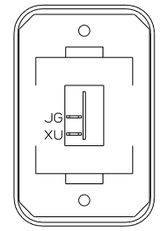

SWITCH-ROCKER
135740-01-CHT
SWITCH-BASE
135741-01-CHT
SWITCH-BEZEL
135742-01-CHT
SCREW
G11-08-08U (2)

DETAIL DD

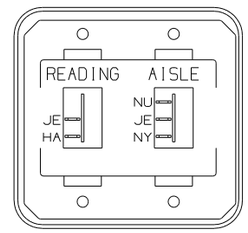

SWITCH-ROCKER
135740-01-CHT
135740-02-CHT
SWITCH-BASE
135741-02-CHT
SWITCH-BEZEL
135742-21-CHT
SCREW
G11-08-08U (4)

DETAIL DE

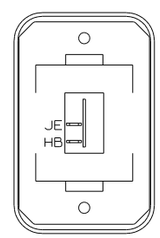

SWITCH-ROCKER
135740-01-CHT
SWITCH-BASE
135741-01-CHT
SWITCH-BEZEL
135742-01-CHT
SCREW
G11-08-08U (2)

DETAIL DF

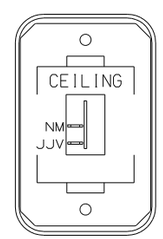

SWITCH-ROCKER
135740-01-CHT
SWITCH-BASE
135741-01-CHT
SWITCH-BEZEL
135742-07-CHT
SCREW
G11-08-08U (2)

DETAIL DG

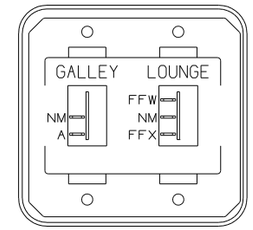

SWITCH-ROCKER
135740-01-CHT
135740-02-CHT
SWITCH-BASE
135741-02-CHT
SWITCH-BEZEL
135742-18-CHT
SCREW
G11-08-08U (4)

DETAIL DH

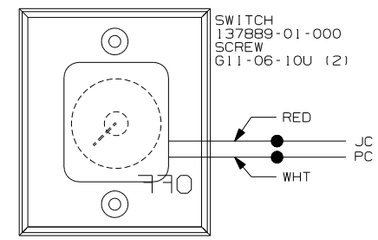

SWITCH
137889-01-000
SCREW
G11-06-10U (2)

DETAIL DJ

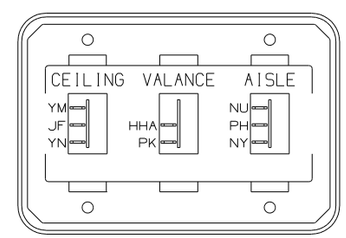

SWITCH-ROCKER
135740-01-CHT
135740-02-CHT (2)
SWITCH-BASE
135741-03-CHT
SWITCH-BEZEL
135742-22-CHT
SCREW
G11-08-08U (4)

DETAIL DK

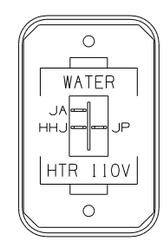

SWITCH-ROCKER
135740-06-CHT
SWITCH-BASE
135741-01-CHT
SWITCH-BEZEL
135742-35-CHT
SCREW
G11-08-08U (2)

DETAIL DL

265 CODES/STANDARDS-CSA/CMVSS

181 CODES/STANDARDS USA

FOR ELECTRICAL TORQUE SPECIFICATIONS SEE DWG NO. 128783-01-000

X-X FOR ELECTRICAL CALLOUTS SEE DWG NO. 121339-01-000

181 265

FIRST USED 06 P39K

DO NOT SCALE DRAWING

TITLE: WIRING INSTL-BODY, 12V

SHEET 4 PART NO 154196 REV

DWG NO 154196

DETAIL ED

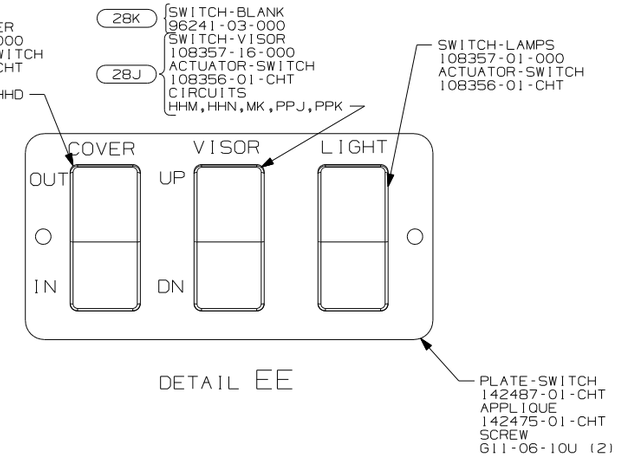

DETAIL EE

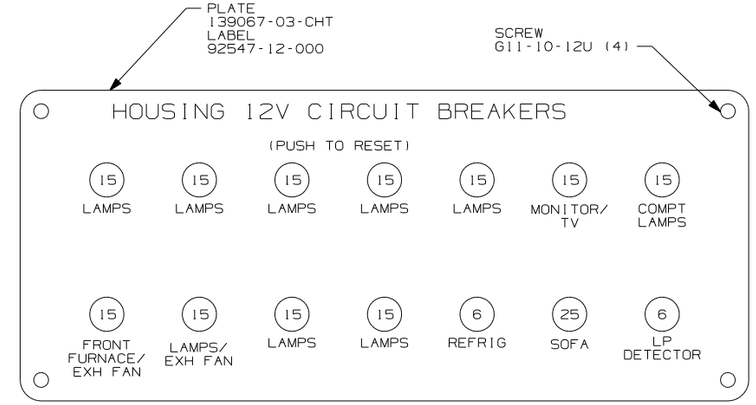

DETAIL EB
CIRCUIT BREAKER
(FRONT VIEW)

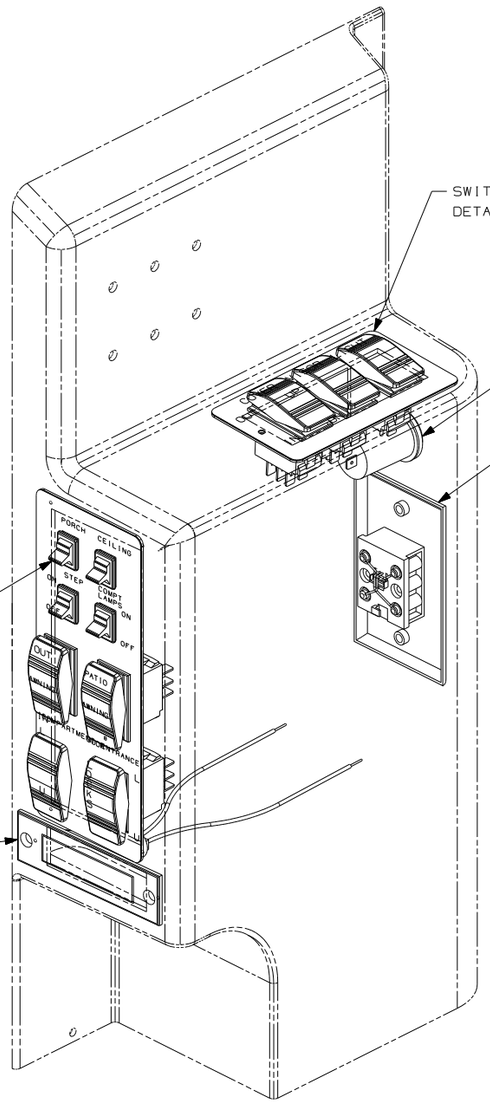

DETAIL EA

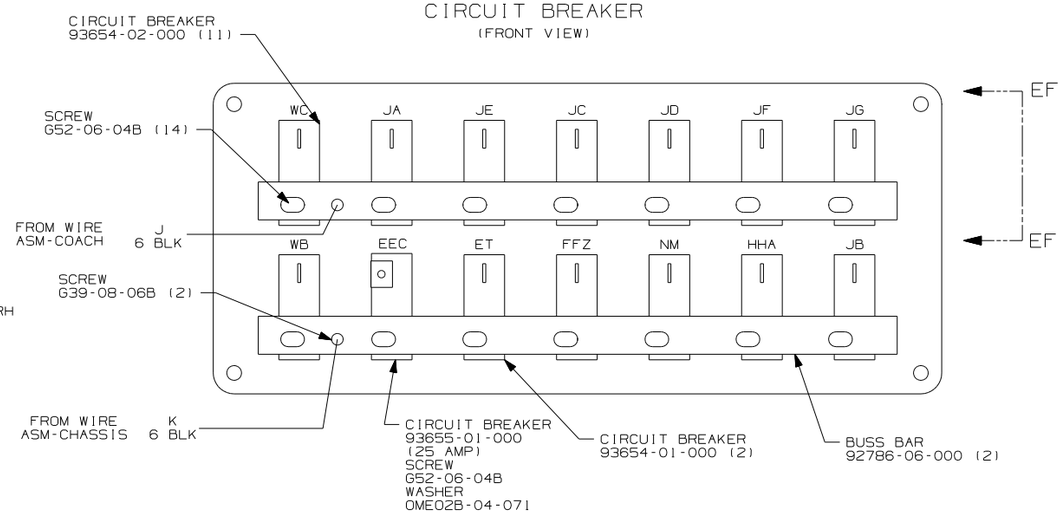

DETAIL EB
CIRCUIT BREAKER
(BACK VIEW)

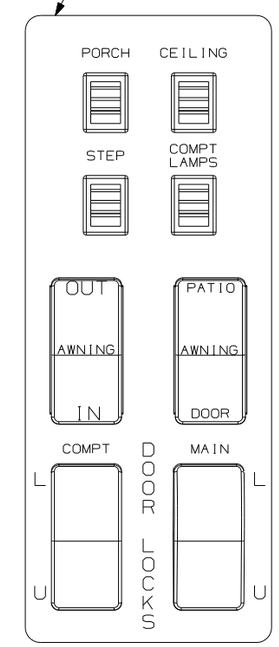

DETAIL EC
(FRONT SIDE)

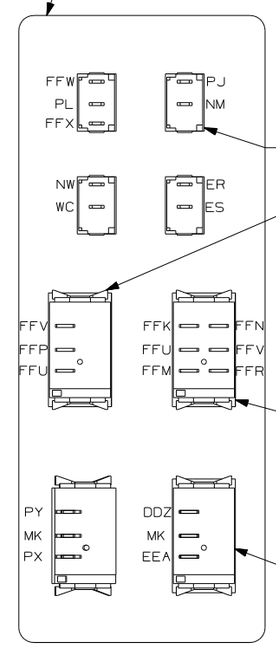

DETAIL EC
(BACK SIDE)

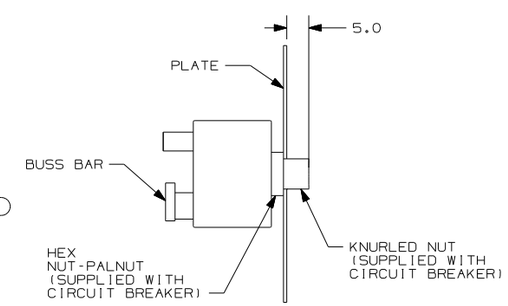

DETAIL EF

40G POWER DOOR LOCK WITH REMOTE
9C1 AWNING-ELECTRIC PACKAGE
28K SUNVISORS - MANUAL (2)
28J SUNVISORS - POWERED (2)
265 CODES/STANDARDS-CSA/CMVSS
1B1 CODES/STANDARDS USA

1B1 265

2 CONNECT THE WIRES OF THE SAME COLOR TOGETHER.

1 WITHOUT 9C1

NOTES:

FOR ELECTRICAL TORQUE SPECIFICATIONS SEE DWG NO. 128783-01-000

X-X FOR ELECTRICAL CALLOUTS SEE DWG NO. 121339-01-000

FIRST USED 06 P39K

DO NOT SCALE DRAWING

TITLE: WIRING INSTL-BODY,12V

SHEET 5 PART NO 154196 REV

DWG NO 154196

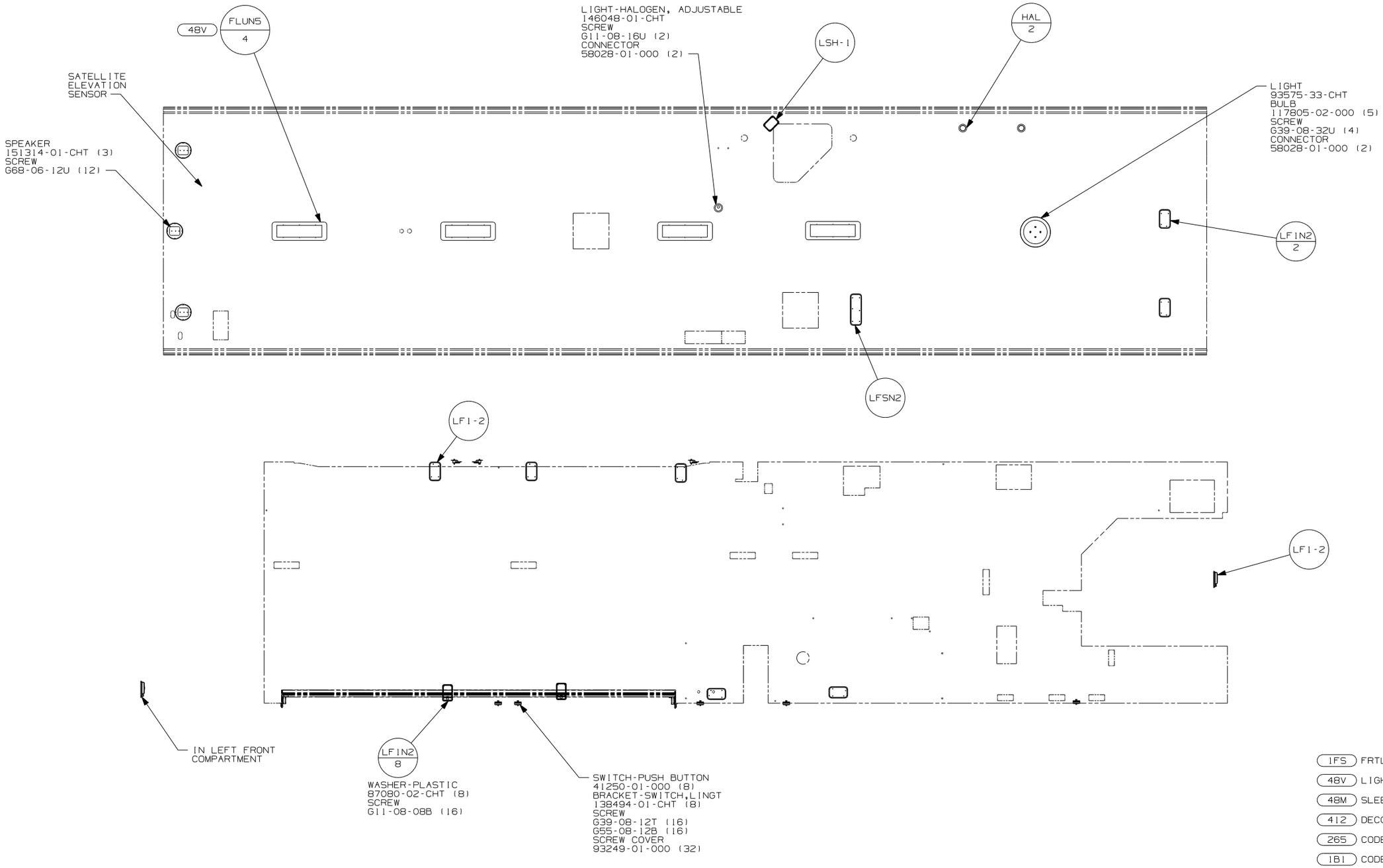

1FS	FRTL 330HP 7.2L 6SPD AL WHLS
48V	LIGHTS-FLUORESCENT
48M	SLEEP NUMBER BED-QUEEN SIZE
412	DECORATIVE LIGHT - CEILING
265	CODES/STANDARDS-CSA/CMVSS
1B1	CODES/STANDARDS USA

1B1 265

FOR ELECTRICAL TORQUE SPECIFICATIONS SEE DWG NO. 128783-01-000

X-X FOR ELECTRICAL CALLOUTS SEE DWG NO. 121339-01-000

FIRST USED 06 P39K

DO NOT SCALE DRAWING

TITLE: WIRING INSTL-BODY,12V

SHEET 6 PART NO 154196 REV

DWG NO 154196

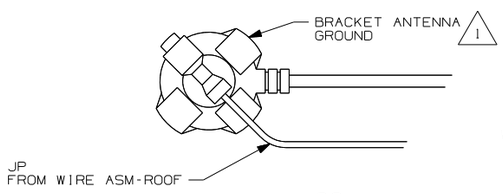

VIEW GC

DETAIL GD 715

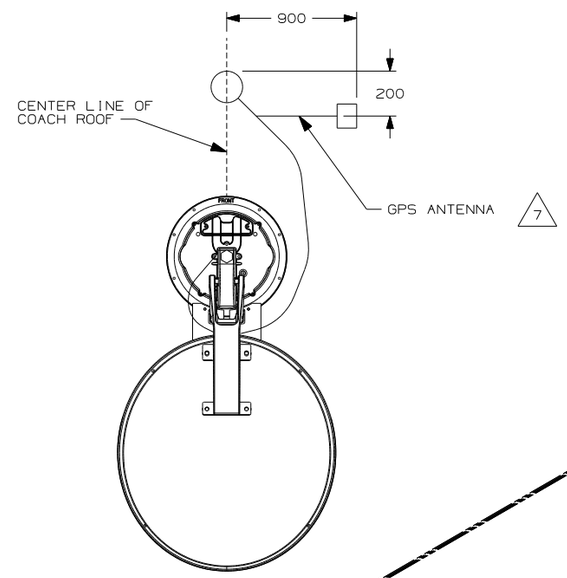

DETAIL GG

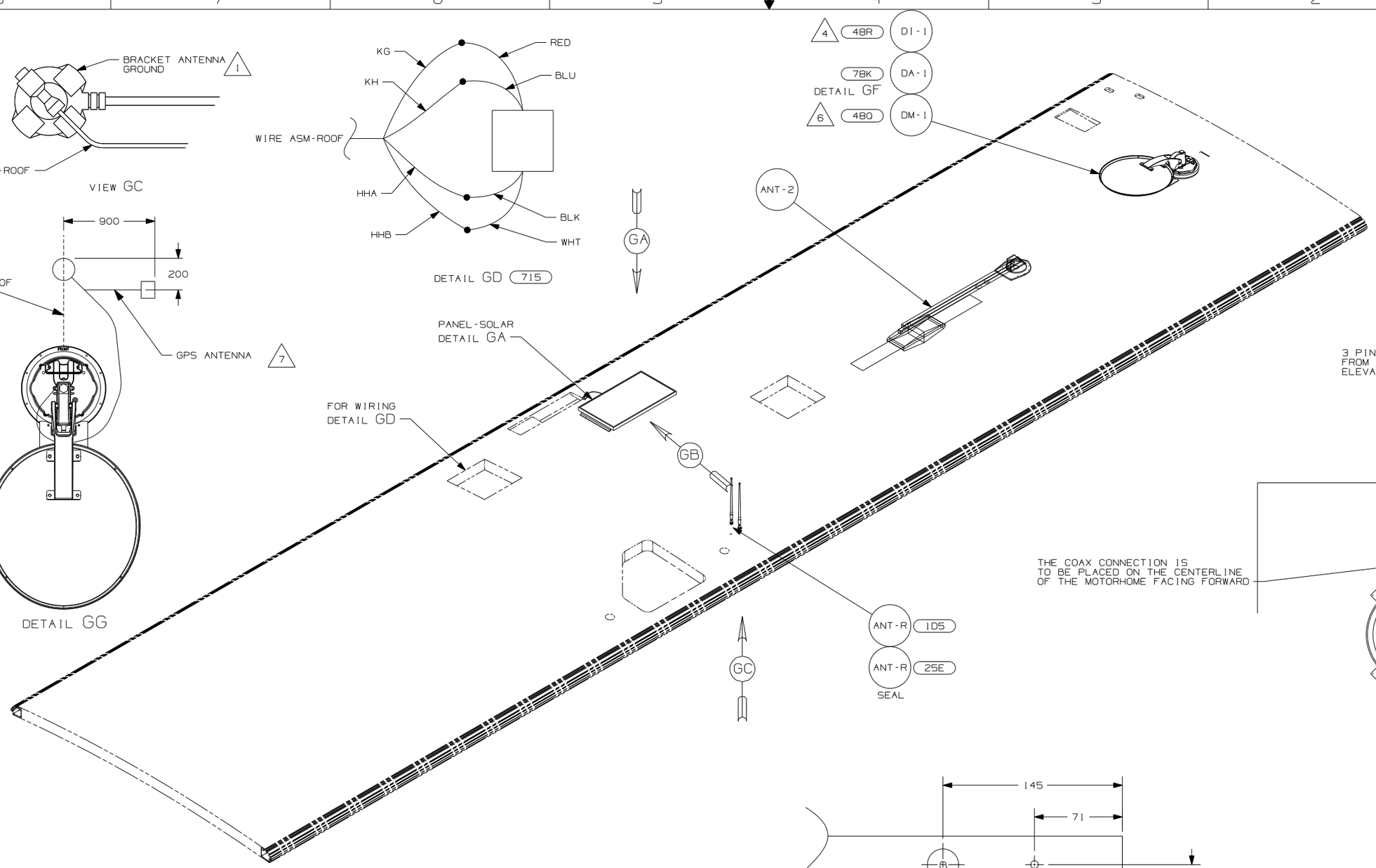

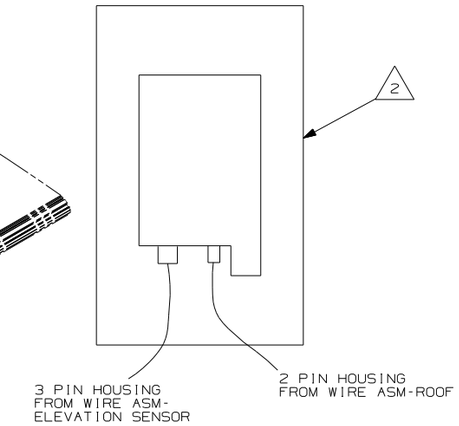

DETAIL GE 48Q

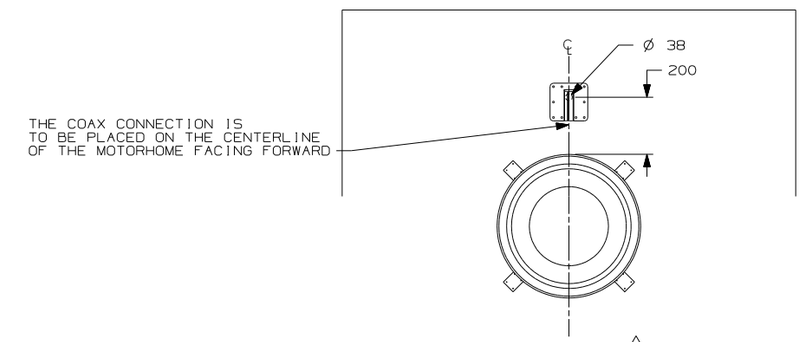

DETAIL GF 5

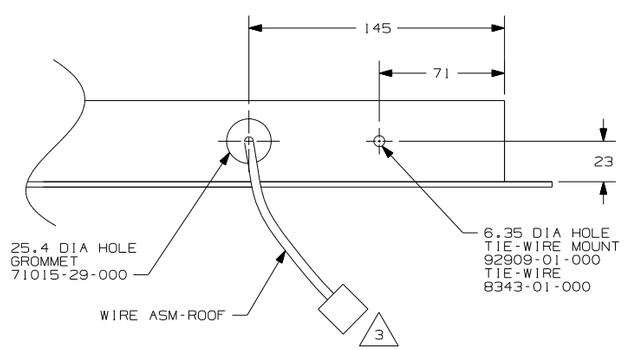

VIEW GB

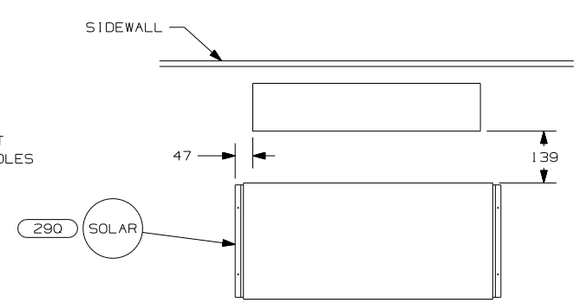

VIEW GA

NOTES:

7. MOUNT GPS ANTENNA TO THE RIGHT OF THE SATELLITE AS SHOWN. SECURE CABLE WITH ROOF SEALANT.
6. SEE DETAIL GE FOR ELEVATION SENSOR ASSEMBLY.
5. REMOVE ALL SHIPPING RESTRAINTS AND FIRMLY INSERT THE SUPPLIED PLUGS INTO THE APPROPRIATE SIZED HOLES AS SPECIFIED IN THE INSTALLATION INSTRUCTIONS.
4. SEE DETAIL GF FOR SATELLITE LOCATION.
3. FASTEN TO VENT
2. SENSOR SUPPLIED WITH SATELLITE ASSEMBLY.
1. WRAP BRACKET LEGS AROUNG ANTENNA BASE.

715	VENT-POWER
78K	SATELLITE DISH-AUTOMATIC
48R	SAT. SYS. IN-MOTION W/O RCVR.
48Q	SATELLITE DISH & ELEV.SENSOR
29Q	SOLAR PANEL-10 WATT
25E	STEREO SYSTEM W/CD REAR
1D5	ENTERTAINMENT CENTR/EXT W/CD
265	CODES/STANDARDS-CSA/CMVSS
1B1	CODES/STANDARDS USA

1B1 265

FOR ELECTRICAL TORQUE SPECIFICATIONS SEE DWG NO. 128783-01-000

X-X FOR ELECTRICAL CALLOUTS SEE DWG NO. 121339-01-000

FIRST USED 06 P39K

DO NOT SCALE DRAWING

TITLE: WIRING INSTL-BODY, 12V

SHEET 7 PART NO 154196 REV

RELEASE	REV A	DATE	DWG NO 154193

REV	ZONE	REVISION RECORD	DATE	DFTR-ORIG

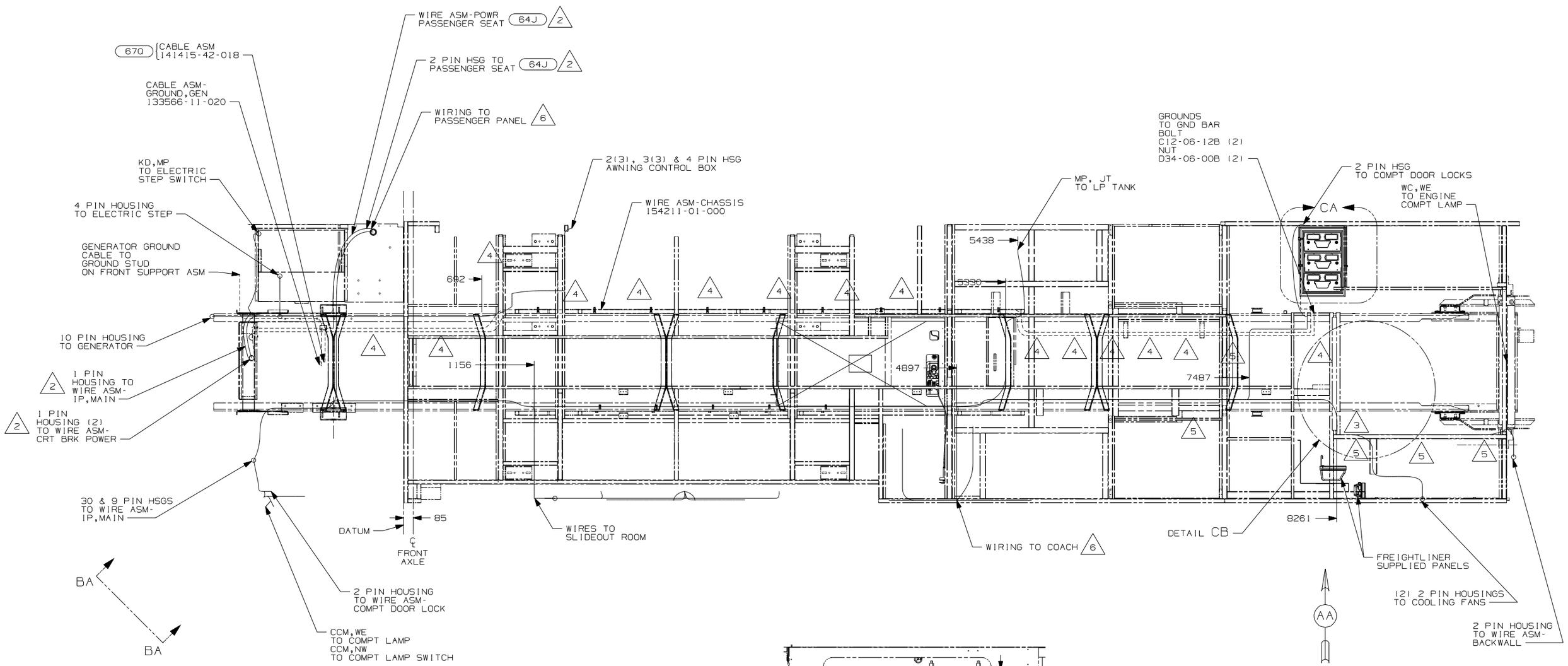

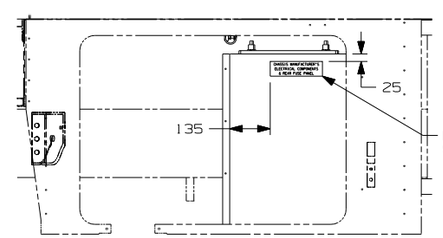

VIEW AA

NOTES:

1. LEGEND: ———— WINNEBAGO: - - - - - - - - - - - - CABLE: —— — —— — CHASSIS SUPPLIED WIRING.

2 SEE WIRING INSTL-FRONT END FOR ADDITIONAL INFORMATION.

3 USE WIRE-TIE 8343-02-000 TO SECURE WIRES TO FLOOR SUPPORT FRAME AT LEAST ONCE EVERY 600MM.

4 CLAMP 83610-01-000, SCREW G11-10-16B

5 CLAMP 10497-03-000, SCREW G39-08-12B

6 SEE WIRING ASM-CHASSIS FOR ADDITIONAL INFORMATION.

67Q	GEN-7.5KW-ONAN-QUIET DIESEL
64J	SEAT PED-6-WAY DR/PASS POWER
22W	BATTERY-SECOND
20C	SOUND SYS. DLX. W/Q-SURROUND
19D	SLIDEOUT ROOM REAR LEFTHAND
13X	INVERTER/CHARGER 2.0 KW
265	CODES/STANDARDS-CSA/CMVSS
181	CODES/STANDARDS USA

181 265

WINNEBAGO INDUSTRIES

DFTR | ORIG. DATE
CHKR | ALL DIMENSIONS ARE IN MILLIMETERS
P.E.
M.E. | FIRST USED 06 P39K
DSNR

UNSPECIFIED TOLERANCES ARE:
WHOLE DIM (X) :
ONE-PLACE (X.X) :
TWO-PLACE (X.XX) :
ANGLE :
THIRD ANGLE PROJECTION

MATERIAL:

DO NOT SCALE DRAWING

TITLE: WIRING INSTL-CHASSIS

SHEET 1 OF 3 | PART NO 154193 | REV

DWG NO 154193

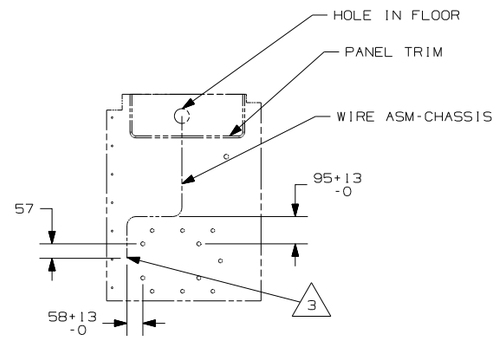

DETAIL BC (64J)

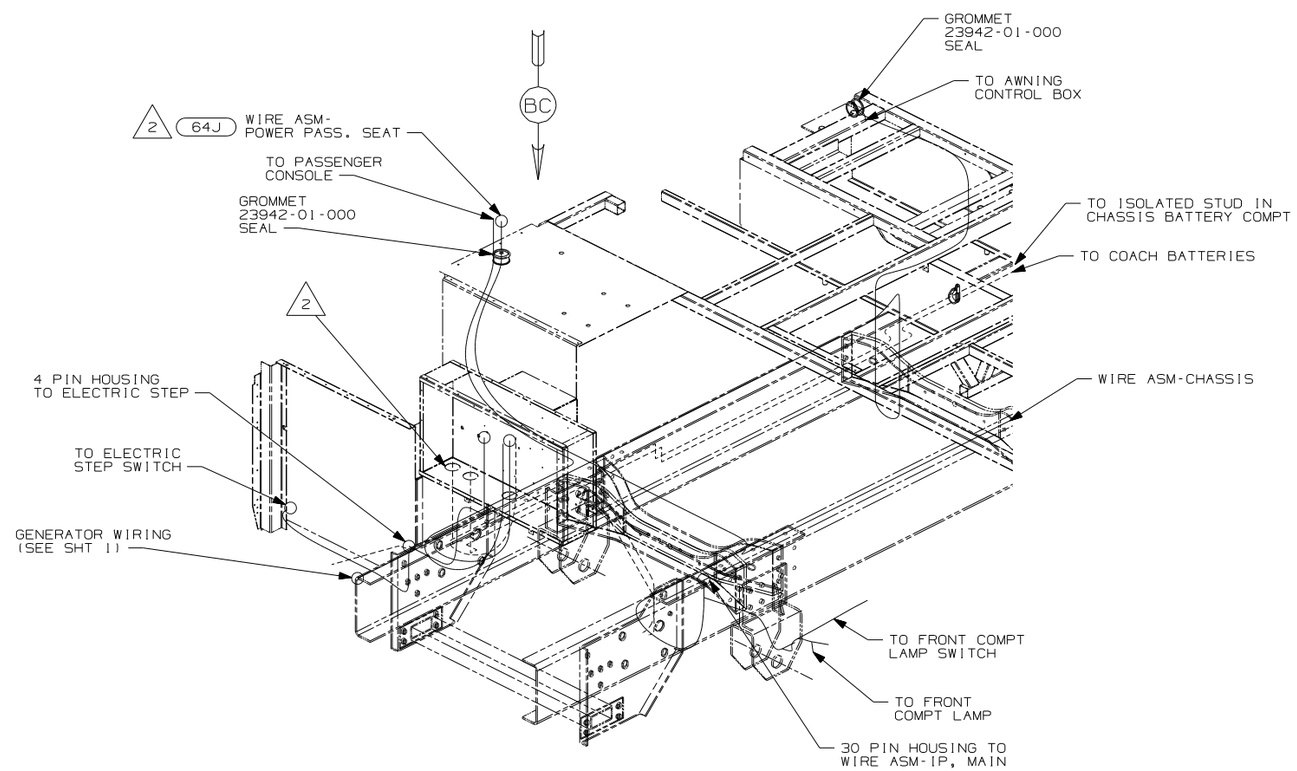

VIEW BA

(64J) SEAT PED-6-WAY DR/PASS POWER
(13X) INVERTER/CHARGER 2.0 KW
(40D) INVERTER-DC/AC,600 WATT
(265) CODES/STANDARDS-CSA/CMVSS
(1B1) CODES/STANDARDS USA

NOTES:

3. LEAVE 675±50MM OF WIRE AT END POINT OF PATH.
2. SEE WIRING INSTL-FRONT END FOR ADDITIONAL INFORMATION.
1. CLAMP WIRES TO TUBES WITH ENOUGH SLACK TO PULL BATTERY TRAY OUT 20 INCHES.

(1B1) (265)

FIRST USED	06 P39K
	DO NOT SCALE DRAWING
TITLE:	WIRING INSTL-CHASSIS
SHEET 2	PART NO 154193 REV

DWG NO 154193

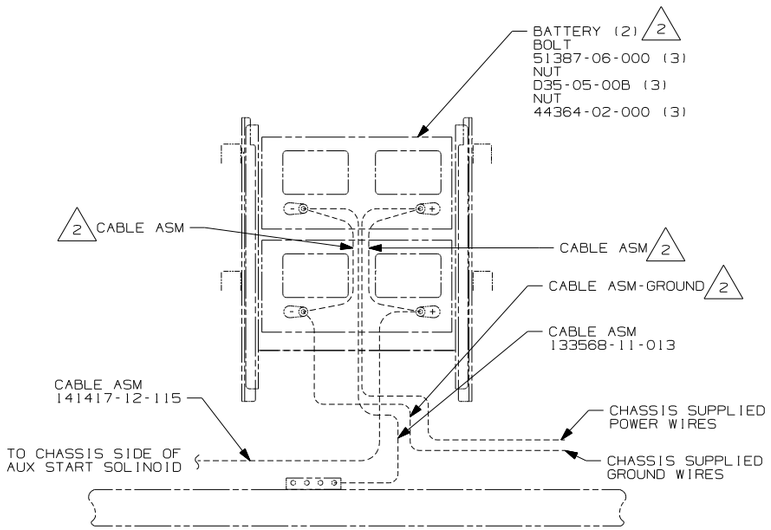

DETAIL CA
(COACH BATTERIES
NOT SHOWN)

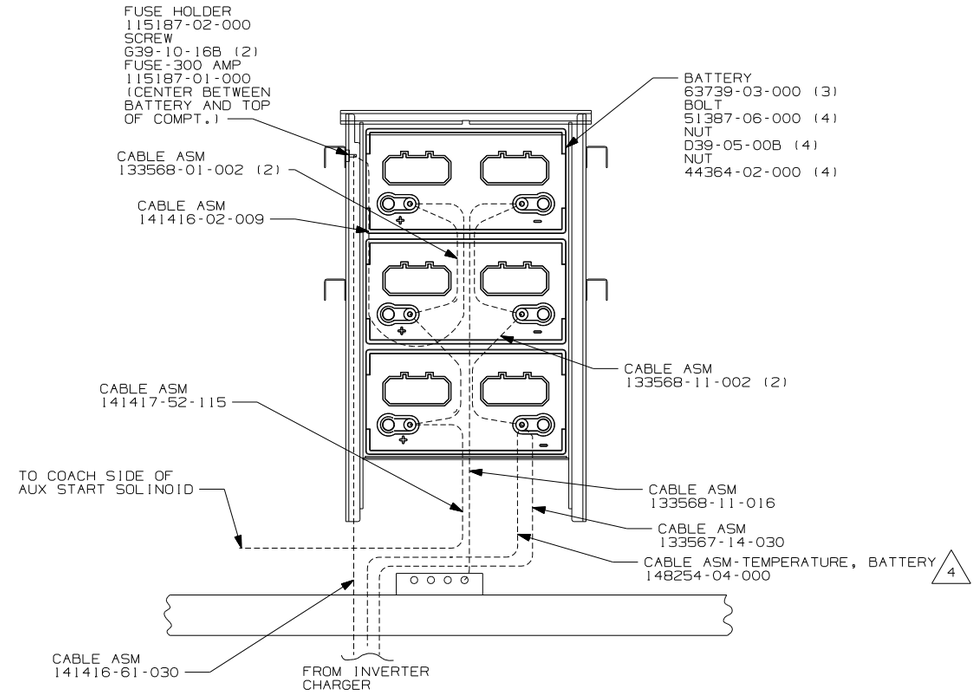

DETAIL CA
(CHASSIS BATTERIES 13X
NOT SHOWN)

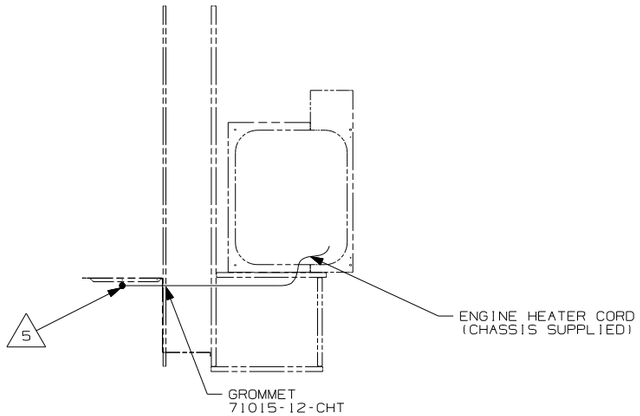

DETAIL CB 3

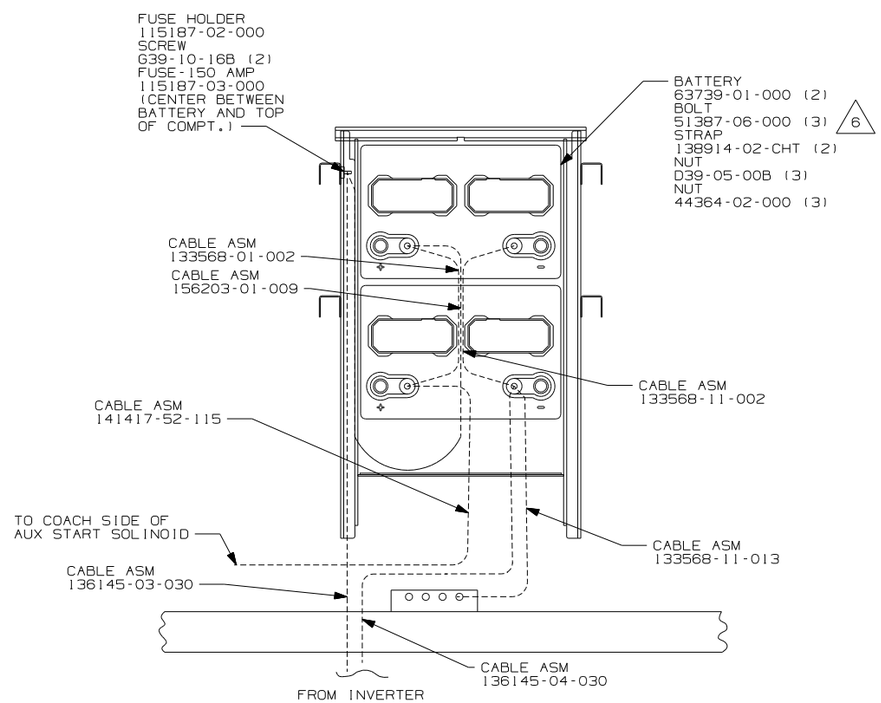

DETAIL CA
(CHASSIS BATTERIES 40D
NOT SHOWN)

6 DISCARD BATTERY STRAPS SUPPLIED W/ BATTERY TRAY

5 ENGINE HEATER CORD MUST PASS THRU COMPT.
AT LEAST 250mm TO PLUG INTO RECP.

4 CONNECT RING TERMINAL OF CABLE ASM-TEMP,BATTERY
TO NEGATIVE POST AS SHOWN AND ROUTE CABLE WITH
NEGATIVE BATTERY CABLE TO INVERTER.

3 SECURE CORD AWAY FROM ALL MOVING PARTS AND EXHAUST
WITH WIRE-TIE 93147-01-000 AS REQUIRED.

2 SUPPLIED WITH CHASSIS

1. LEGEND: ———— WINNEBAGO: - - - - - - - - - - - - CABLE: —— - —— - —— CHASSIS SUPPLIED WIRING.

NOTES:

40D INVERTER-DC/AC,600 WATT
13X INVERTER/CHARGER 2.0 KW
265 CODES/STANDARDS-CSA/CMVSS
181 CODES/STANDARDS USA

181 265

FIRST USED	06 P39K
	DO NOT SCALE DRAWING
TITLE:	WIRING INSTL-CHASSIS
SHEET 3	PART NO 154193 REV

DRAWING NO.	SHEET	SERIES
151750-01	1	500
151750-02	2	300
151750-03	3	400
151750-04	4	700
151750-05	5	D
151750-06	6	F
151750-07	7	G
151750-08	8	P
151750-09	9	R&S
151750-10	10	329SB, 331SC, 331ST

RELEASE	REV A	DATE	DWG NO 151750

REV	ZONE	REVISION RECORD	DATE	DFTR-ORIG

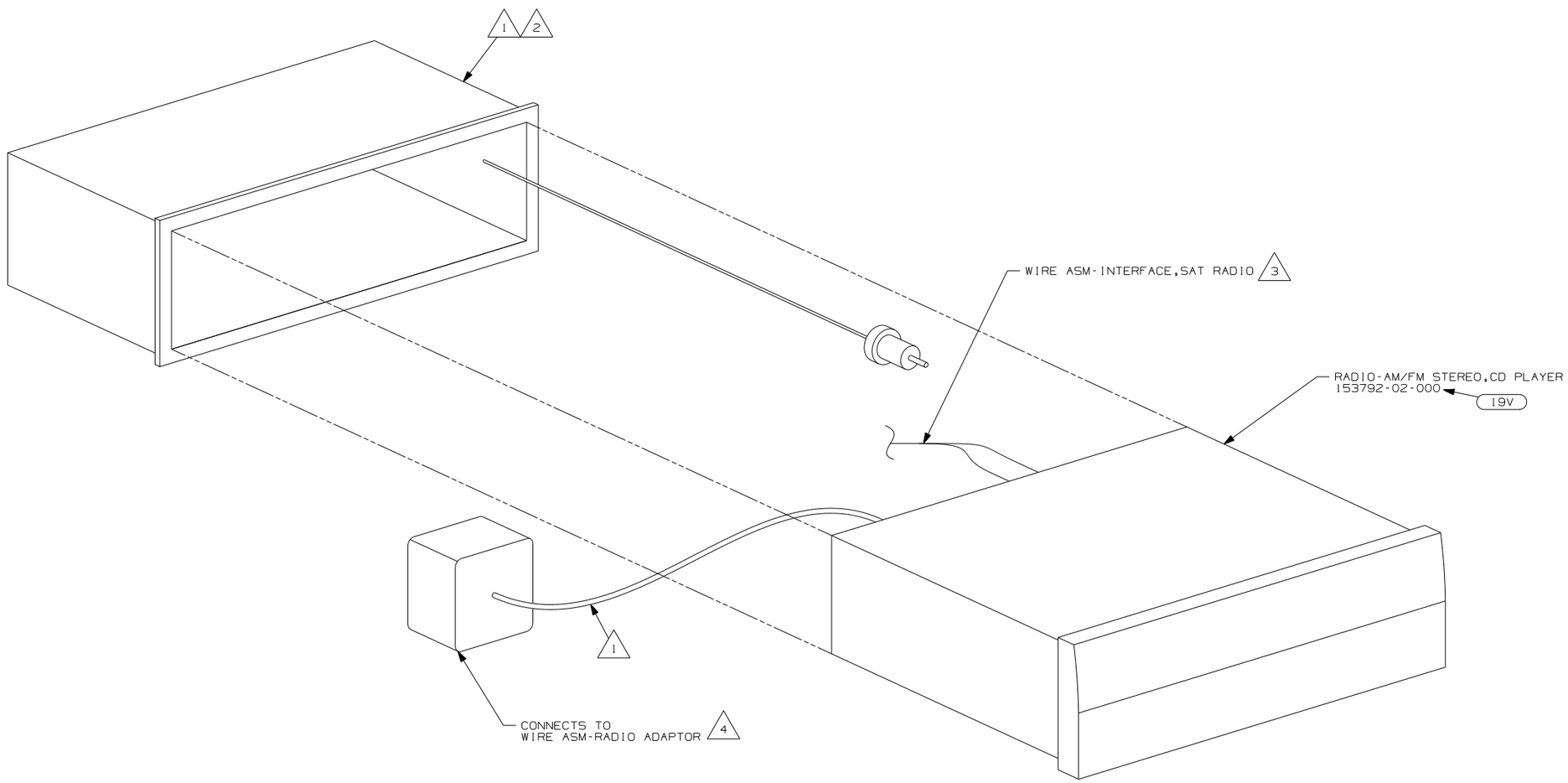

19V RADIO-AM/FM STEREO CD PLAYER

NOTES:

4. SEE WIRING INSTL-CHASSIS FOR ADDITIONAL INFORMATION.
3. TO SATELLITE RECEIVER. SEE ANTENNA INSTL-RADIO & CB FOR ADDITIONAL INFORMATION.
2. BEND TABS ON ALL 4 SIDES TO SECURE MOUNTING BRACKET TO DASH OPENING.
1. SUPPLIED WITH RADIO

WINNEBAGO INDUSTRIES

DFTR	ORIG. DATE
CHKR	ALL DIMENSIONS ARE IN MILLIMETERS
P.E.	
M.E.	FIRST USED
DSNR	06 MOTORHOMES

UNSPECIFIED TOLERANCES ARE:
WHOLE DIM (X) :
ONE-PLACE (X.X) :
TWO-PLACE (X.XX) :
ANGLE :

MATERIAL:

THIRD ANGLE PROJECTION

DO NOT SCALE DRAWING

TITLE: RADIO INSTL

SHEET 1 OF 10 | PART NO 151750

REF:

DWG NO 151750

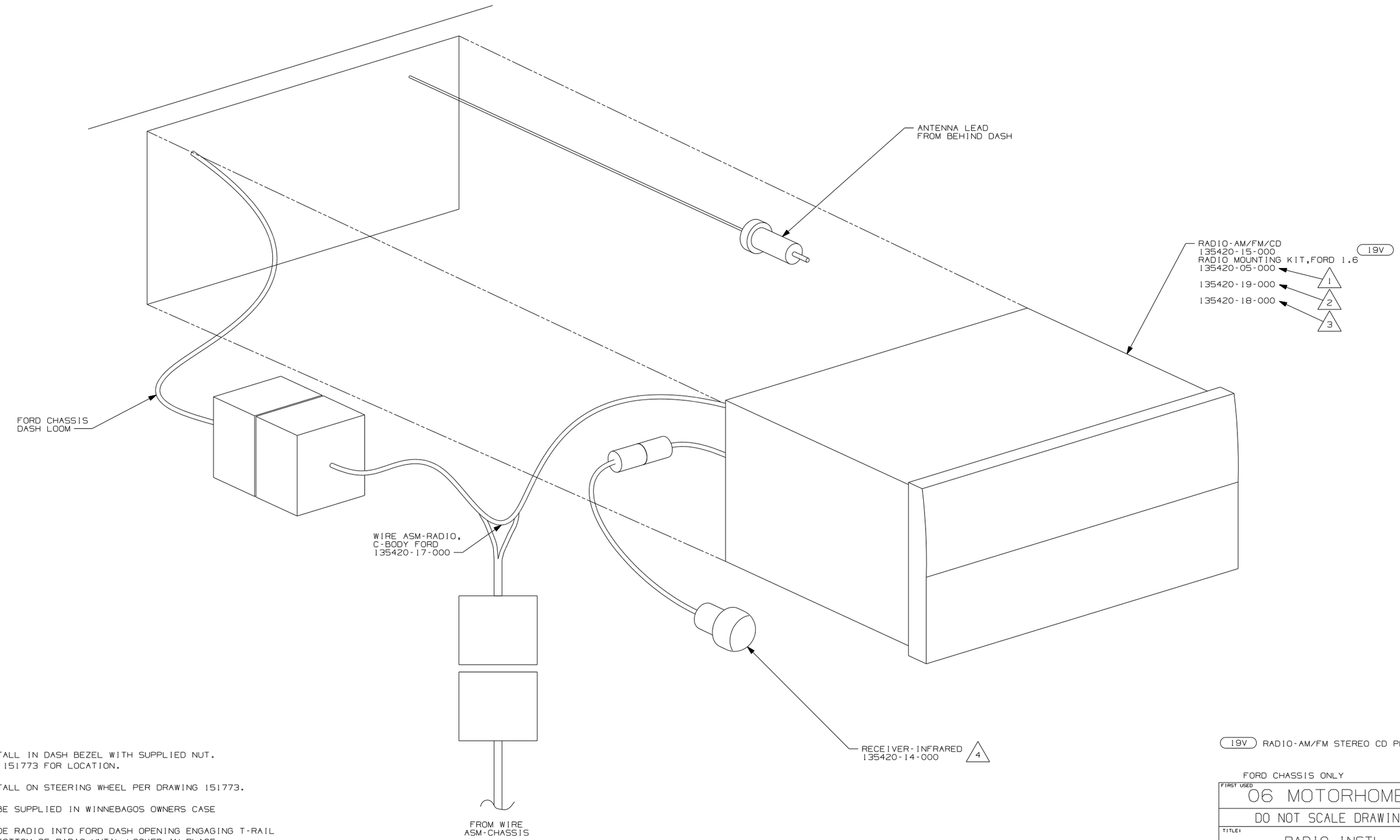

4 INSTALL IN DASH BEZEL WITH SUPPLIED NUT.
SEE 151773 FOR LOCATION.

3 INSTALL ON STEERING WHEEL PER DRAWING 151773.

2 TO BE SUPPLIED IN WINNEBAGOS OWNERS CASE

1 SLIDE RADIO INTO FORD DASH OPENING ENGAGING T-RAIL
ON BOTTOM OF RADIO UNTIL LOCKED IN PLACE.

NOTES:

19V RADIO-AM/FM STEREO CD PLAYER

FORD CHASSIS ONLY

FIRST USED 06 MOTORHOMES	
DO NOT SCALE DRAWING	
TITLE: RADIO INSTL	
SHEET 2	PART NO 151750

DWG NO 151750

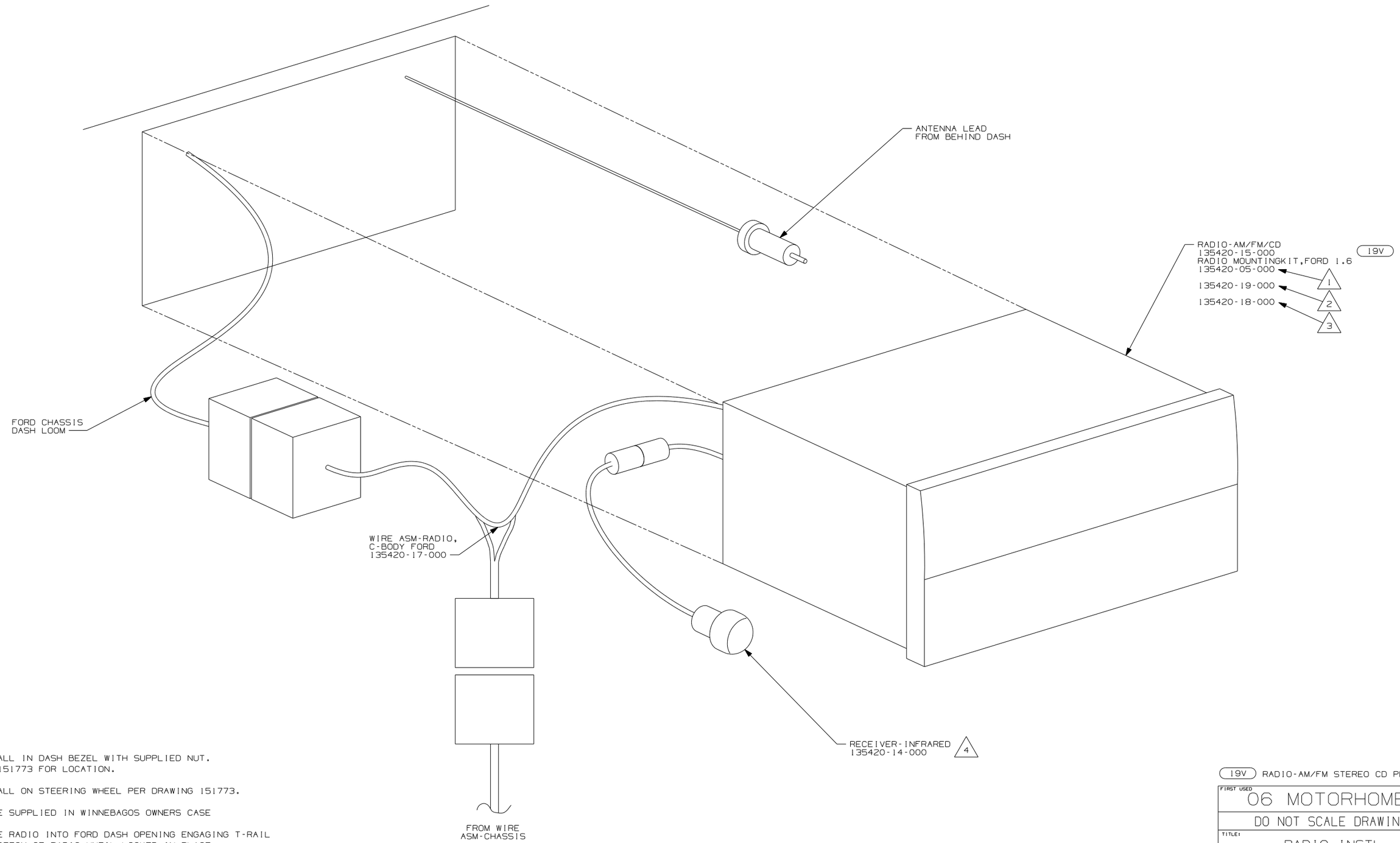

4 INSTALL IN DASH BEZEL WITH SUPPLIED NUT.
SEE 151773 FOR LOCATION.

3 INSTALL ON STEERING WHEEL PER DRAWING 151773.

2 TO BE SUPPLIED IN WINNEBAGOS OWNERS CASE

1 SLIDE RADIO INTO FORD DASH OPENING ENGAGING T-RAIL
ON BOTTOM OF RADIO UNTIL LOCKED IN PLACE.

NOTES:

19V RADIO-AM/FM STEREO CD PLAYER

FIRST USED 06 MOTORHOMES

DO NOT SCALE DRAWING

TITLE: RADIO INSTL

SHEET 3 PART NO 151750

DWG NO 151750

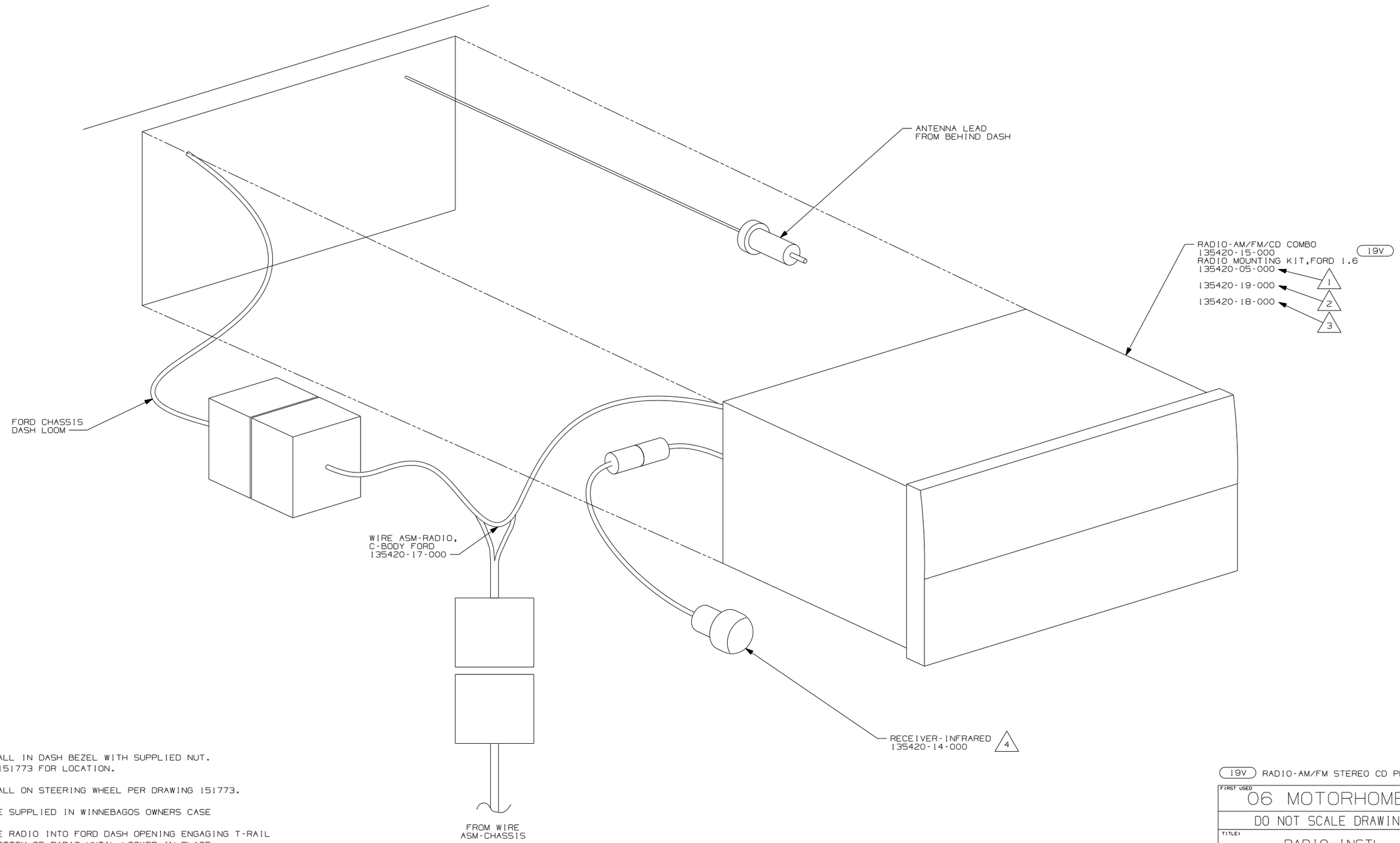

4 INSTALL IN DASH BEZEL WITH SUPPLIED NUT.
SEE 151773 FOR LOCATION.

3 INSTALL ON STEERING WHEEL PER DRAWING 151773.

2 TO BE SUPPLIED IN WINNEBAGOS OWNERS CASE

1 SLIDE RADIO INTO FORD DASH OPENING ENGAGING T-RAIL
ON BOTTOM OF RADIO UNTIL LOCKED IN PLACE.

NOTES:

19V RADIO-AM/FM STEREO CD PLAYER

FIRST USED 06 MOTORHOMES	
DO NOT SCALE DRAWING	
TITLE: RADIO INSTL	
SHEET 4	PART NO 151750

DWG NO 151750

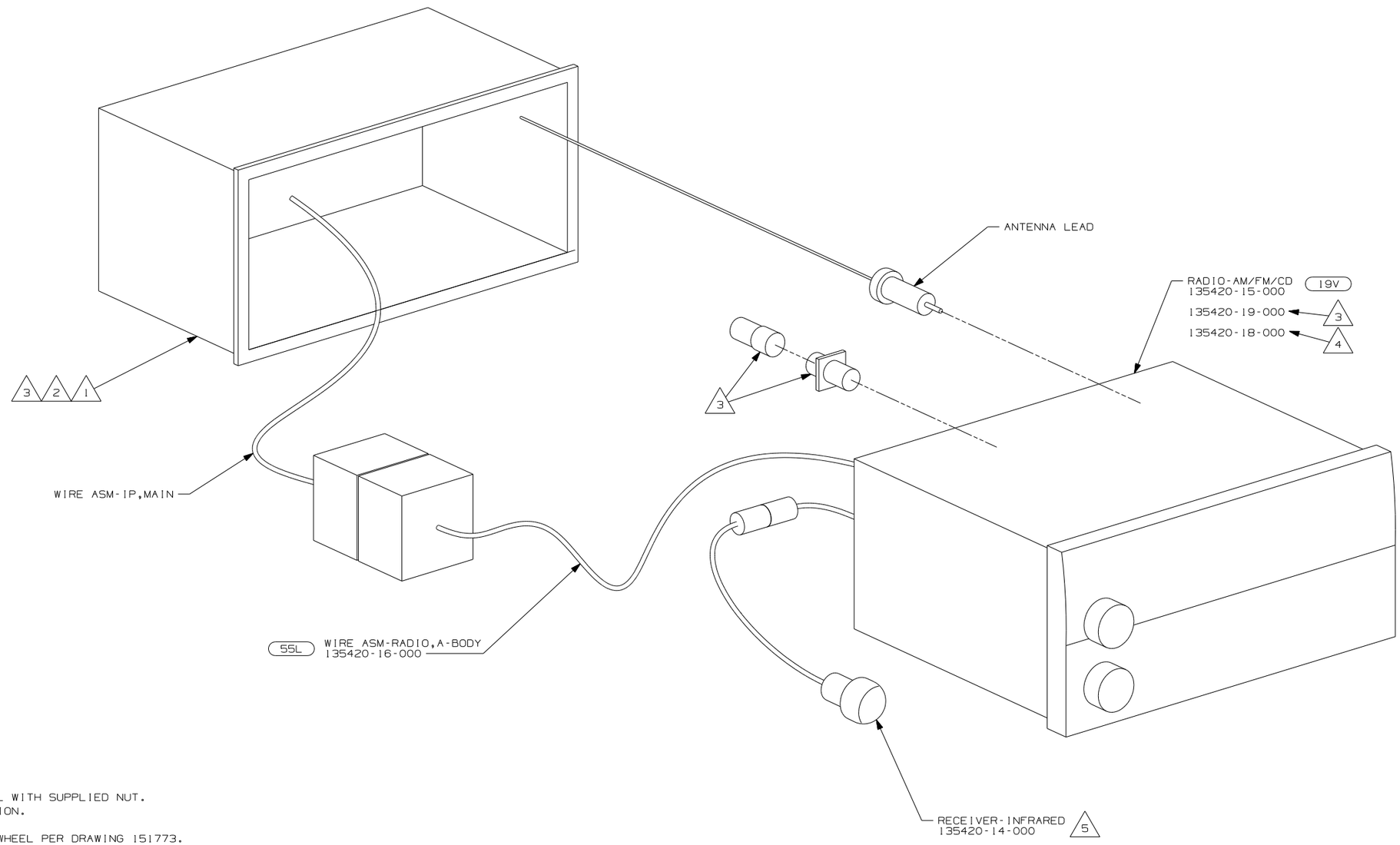

5 INSTALL IN DASH BEZEL WITH SUPPLIED NUT. SEE 151773 FOR LOCATION.

4 INSTALL ON STEERING WHEEL PER DRAWING 151773.

3 TO BE SUPPLIED IN WINNEBAGOS OWNERS CASE

2 BEND TABS ON ALL 4 SIDES TO SECURE MOUNTING BRACKET TO DASH OPENING.

1 SUPPLIED WITH MOUNTING KIT 135420-07-000

NOTES:

19V RADIO-AM/FM STEREO CD PLAYER

FIRST USED 06 MOTORHOMES

DO NOT SCALE DRAWING

TITLE: RADIO INSTL

SHEET 5 PART NO 151750

DWG NO 151750

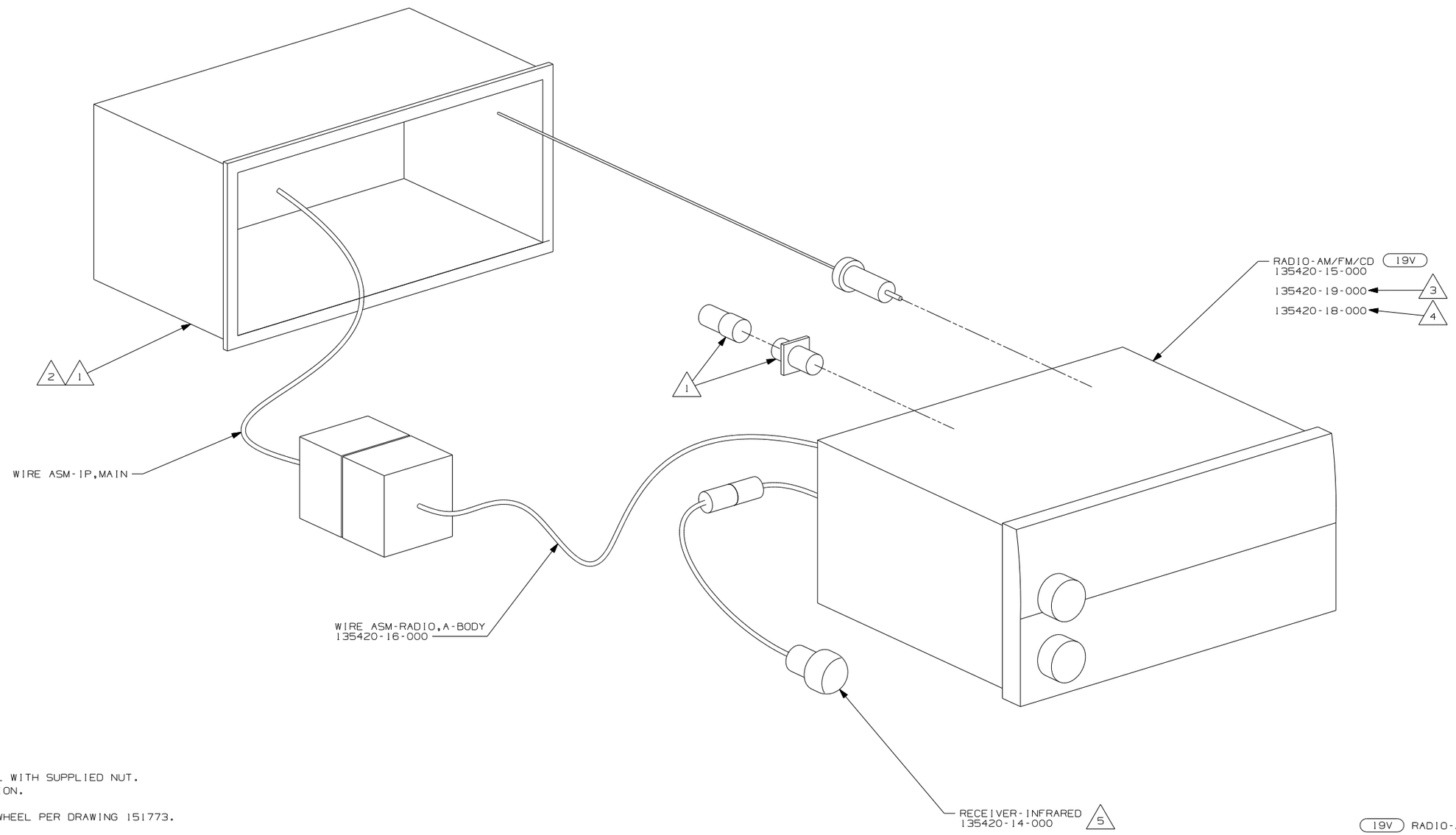

5 INSTALL IN DASH BEZEL WITH SUPPLIED NUT. SEE 151773 FOR LOCATION.

4 INSTALL ON STEERING WHEEL PER DRAWING 151773.

3 TO BE SUPPLIED IN WINNEBAGOS OWNERS CASE

2 BEND TABS ON ALL 4 SIDES TO SECURE MOUNTING BRACKET TO DASH OPENING.

1 SUPPLIED WITH MOUNTING KIT 135420-07-000.

NOTES:

19V RADIO-AM/FM STEREO CD PLAYER

FIRST USED 06 MOTORHOMES

DO NOT SCALE DRAWING

TITLE: RADIO INSTL

SHEET 6 PART NO 151750

DWG NO 151750

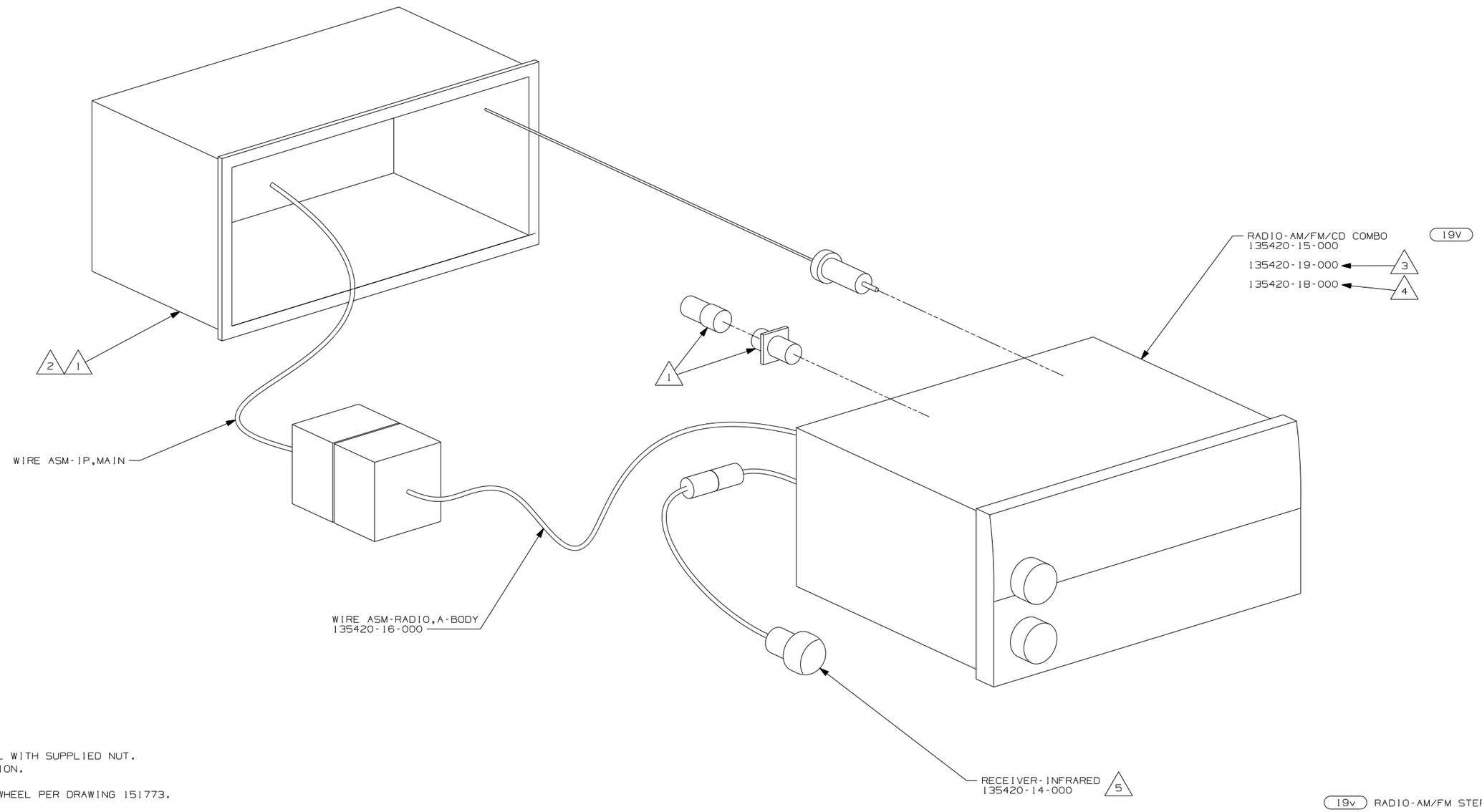

5 INSTALL IN DASH BEZEL WITH SUPPLIED NUT. SEE 151773 FOR LOCATION.

4 INSTALL ON STEERING WHEEL PER DRAWING 151773.

3 TO BE SUPPLIED IN WINNEBAGOS OWNERS CASE

2 BEND TABS ON ALL 4 SIDES TO SECURE MOUNTING BRACKET TO DASH OPENING.

1 SUPPLIED WITH MOUNTING KIT 135420-07-000.

NOTES:

19v RADIO-AM/FM STEREO CD PLAYER

FIRST USED 06 MOTORHOMES

DO NOT SCALE DRAWING

TITLE: RADIO INSTL

SHEET 7 PART NO 151750

DWG NO 151750

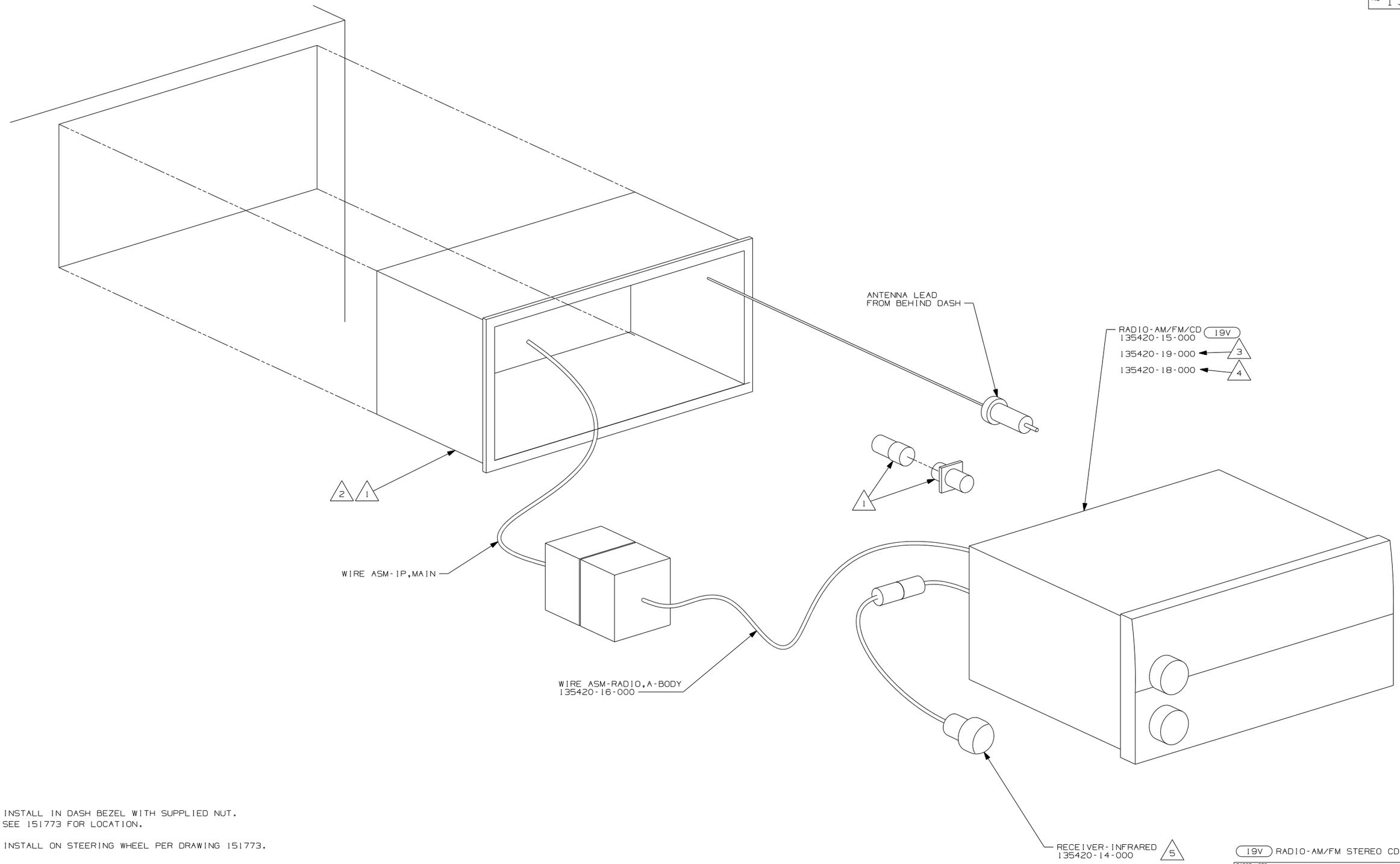

NOTES:

1. SUPPLIED WITH MOUNTING KIT 135420-07-000.
2. BEND TABS ON ALL 4 SIDES TO SECURE MOUNTING BRACKET TO DASH OPENING.
3. TO BE SUPPLIED IN WINNEBAGOS OWNERS CASE
4. INSTALL ON STEERING WHEEL PER DRAWING 151773.
5. INSTALL IN DASH BEZEL WITH SUPPLIED NUT. SEE 151773 FOR LOCATION.

19V RADIO-AM/FM STEREO CD PLAYER

FIRST USED 06	MOTORHOMES
DO NOT SCALE DRAWING	
TITLE: RADIO INSTL	
SHEET 8	PART NO 151750

DWG NO 151750

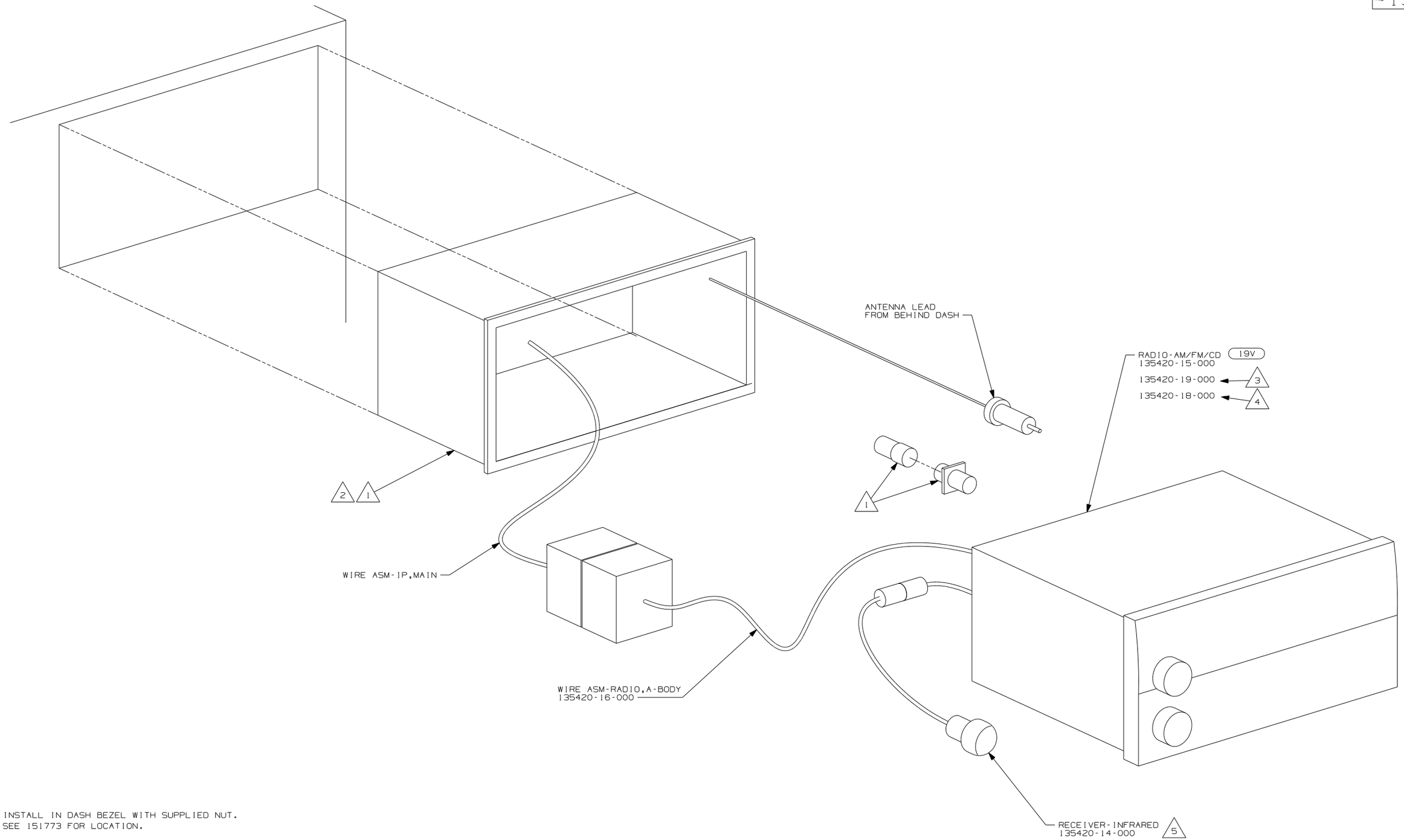

5 INSTALL IN DASH BEZEL WITH SUPPLIED NUT.
SEE 151773 FOR LOCATION.

4 INSTALL ON STEERING WHEEL PER DRAWING 151773.

3 TO BE SUPPLIED IN WINNEBAGOS OWNERS CASE

2 BEND TABS ON ALL 4 SIDES TO SECURE
MOUNTING BRACKET TO DASH OPENING.

1 SUPPLIED WITH MOUNTING KIT 135420-07-000.

NOTES:

19V RADIO-AM/FM STEREO CD PLAYER

FIRST USED 06 MOTORHOMES

DO NOT SCALE DRAWING

TITLE: RADIO INSTL

SHEET 9 PART NO 151750

DWG NO 151750

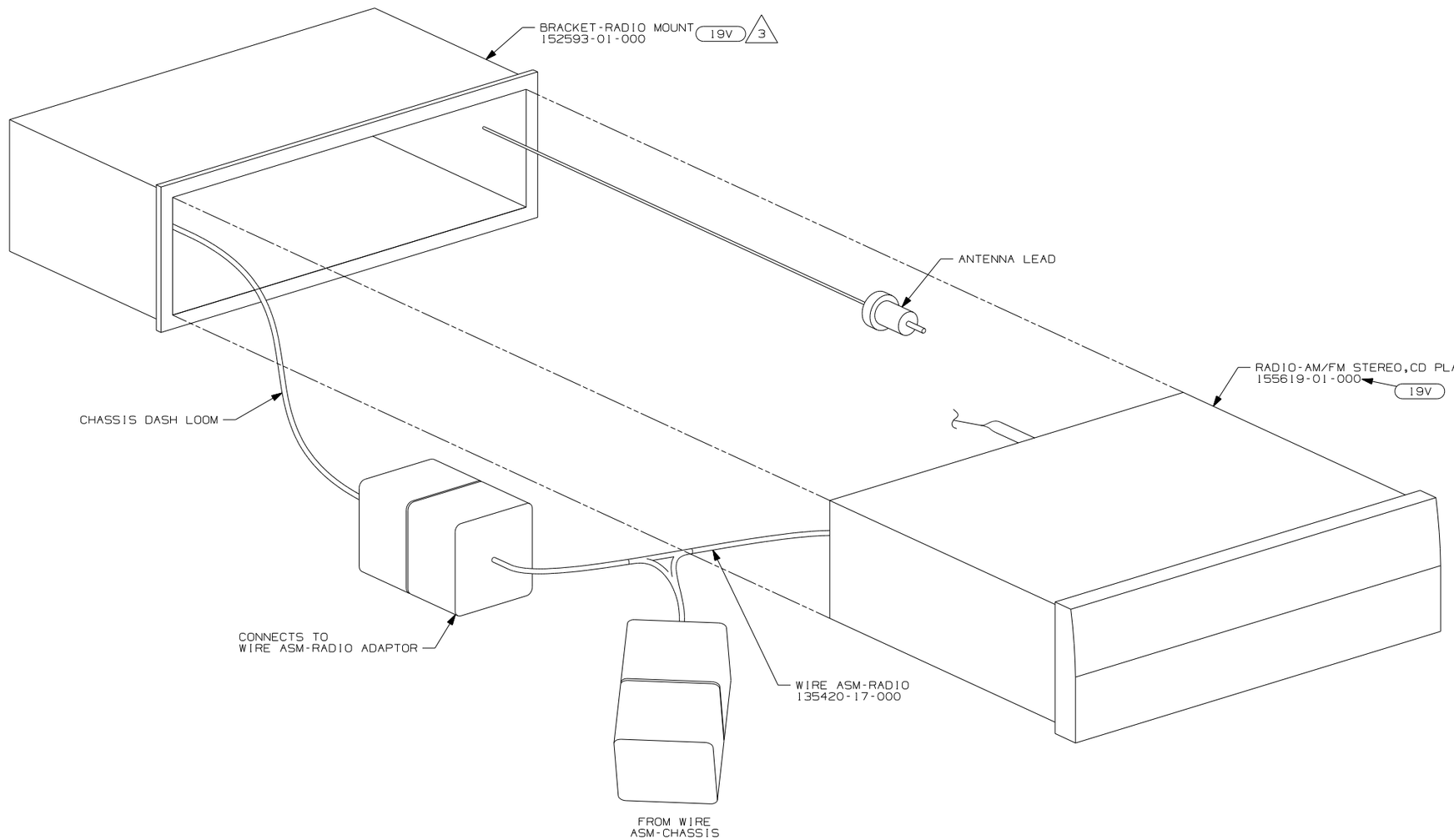

3 INSTALL REAR RADIO SUPPORT BRACKET, ENGAGING T-RAIL ON BOTTOM OF RADIO UNTIL LOCKED IN PLACE.

2 BEND TABS ON ALL 4 SIDES TO SECURE MOUNTING BRACKET TO DASH OPENING.

1 CREDIT CARD REMOTE SUPPLIED WITH RADIO IS TO BE INCLUDED IN OWNER'S INFO CASE.

NOTES:

X-X FOR ELECTRICAL CALLOUTS SEE DWG NO. 121339-01-000

19V RADIO-AM/FM STEREO CD PLAYER

FIRST USED 06 MOTORHOMES

DO NOT SCALE DRAWING

TITLE: RADIO INSTL

SHEET 10 PART NO 151750

DRAWING NO.	
152106-01	WIN
152106-02	ITA

RELEASE	REV A	DATE	DWG NO 152106
REV	ZONE	REVISION RECORD	DATE / DFTR-ORIG

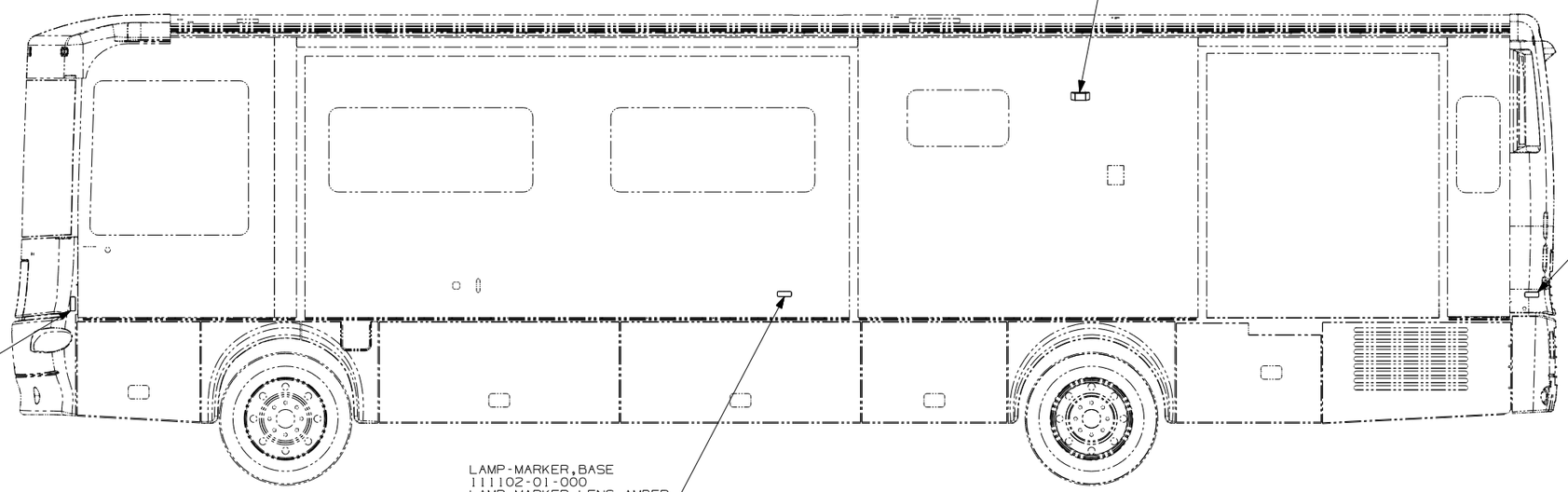

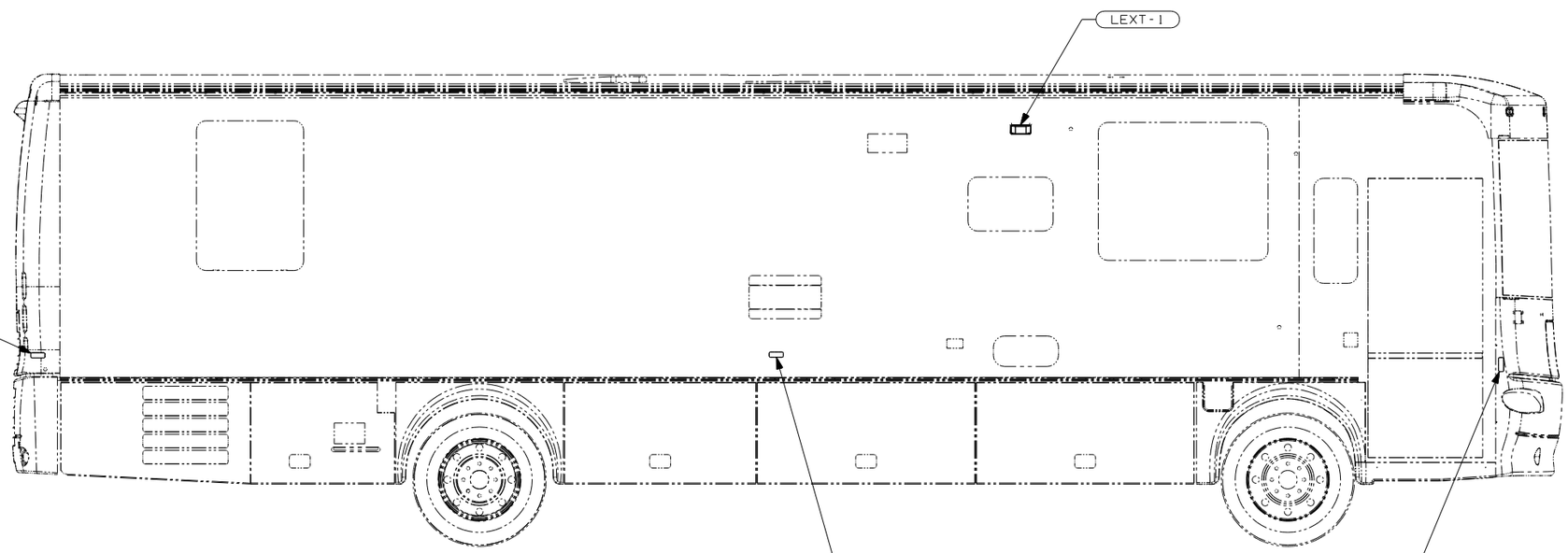

265 CODES/STANDARDS-CSA/CMVSS

1B1 CODES/STANDARDS USA

1B1 265

FOR ELECTRICAL TORQUE SPECIFICATIONS SEE DWG NO. 128783-01-000

X-X FOR ELECTRICAL CALLOUTS SEE DWG NO. 121339-01-000

WINNEBAGO INDUSTRIES

DFTR	ORIG. DATE
CHKR	ALL DIMENSIONS ARE IN MILLIMETERS
P.E.	
M.E.	FIRST USED
DSNR	06 P-SERIES

UNSPECIFIED TOLERANCES ARE:
WHOLE DIM (X) :
ONE-PLACE (X.X) :
TWO-PLACE (X.XX) :
ANGLE :

MATERIAL:

THIRD ANGLE PROJECTION

DO NOT SCALE DRAWING

TITLE: WIRING INSTL-EXTERIOR LAMPS

SHEET 1 OF 2 | PART NO 152106

DWG NO 152106

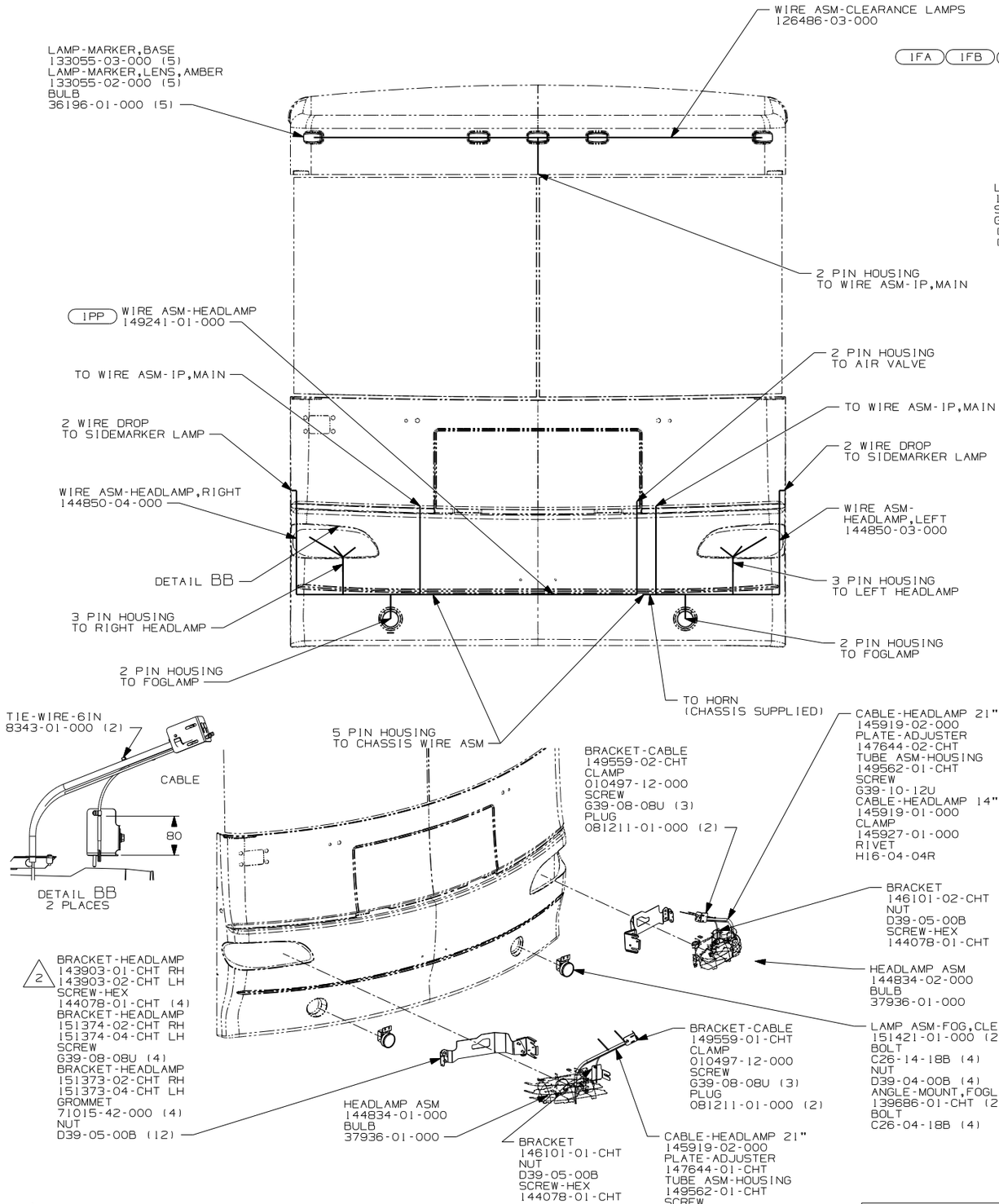

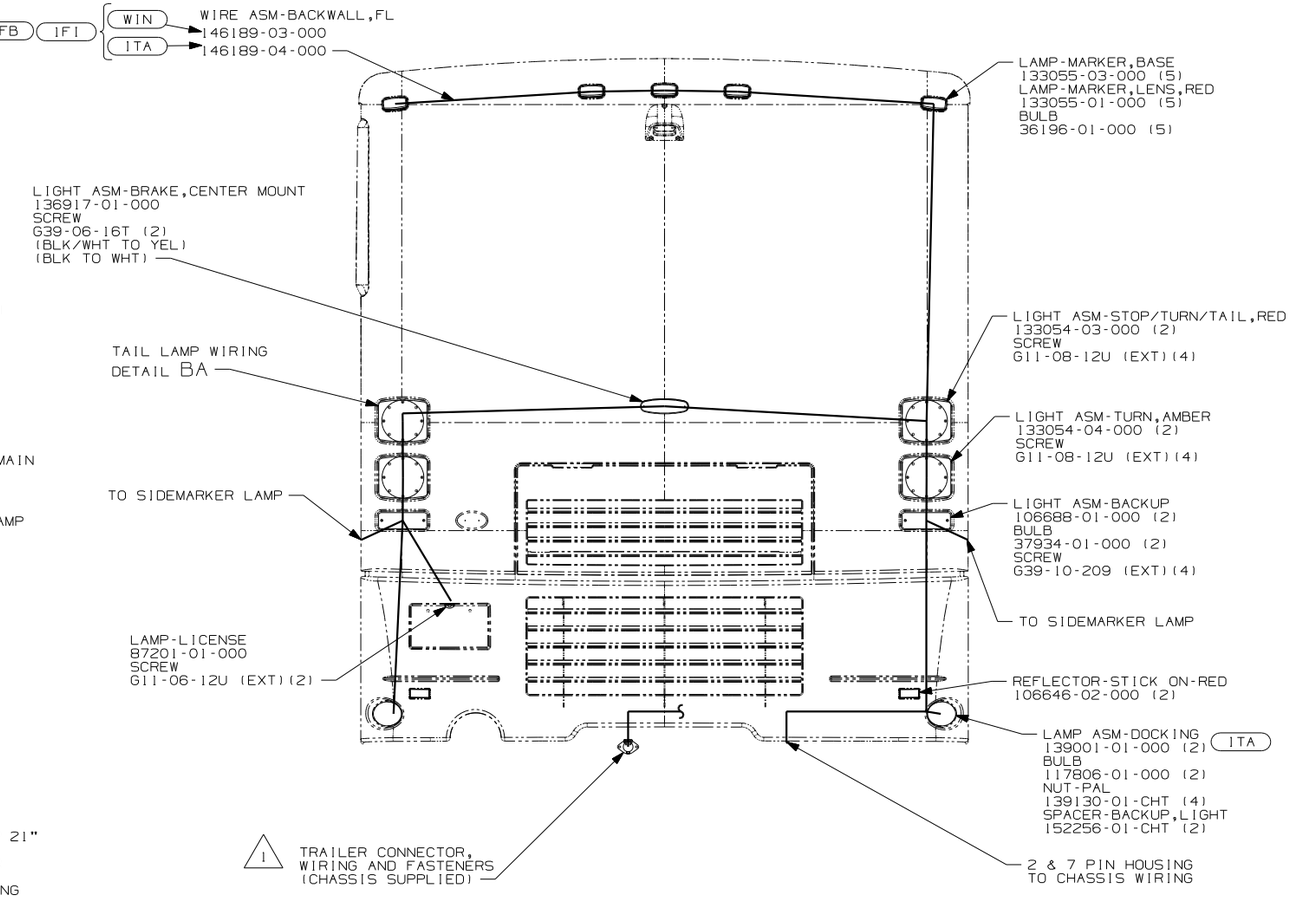

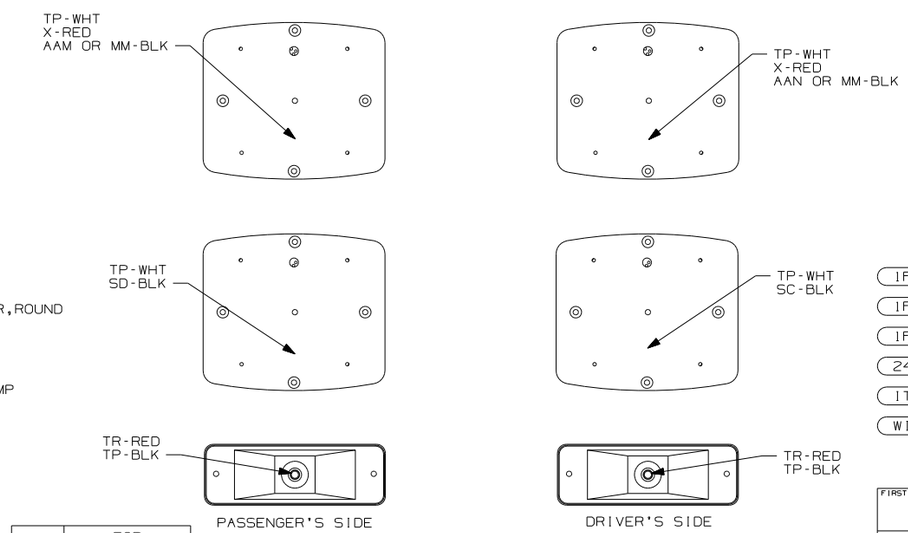

DETAIL BA
(SHOWN FROM REAR SIDE)

IFI FRTL 27,910 350HP 7.2L 6SPD
IFB FRTL 300HP 5.9L 6SPD AL WHLS
IFA FRTL 27,910 300 5.9L 5-SP
240 TRAILER HITCH
ITA ITASCA ONLY
WIN WINNEBAGO ONLY

FOR ELECTRICAL TORQUE SPECIFICATIONS SEE DWG NO. 128783-01-000

X-X FOR ELECTRICAL CALLOUTS SEE DWG NO. 121339-01-000

2 LAMP TO BE ASSEMBLED TO BRACKET PRIOR TO ITS ATTACHMENT TO THE FRONT END.

1 CONNECTOR-PLUG,TRAILER (146246-01-000) TO BE SUPPLIED IN COACH.

NOTES:

FIRST USED 06 P-SERIES

DO NOT SCALE DRAWING

TITLE: WIRING INSTL-EXTERIOR LAMPS

SHEET 2 PART NO 152106

DRAWING NO.	FEATURE
152098-01	WIN
152098-02	ITA

RELEASE	REV A	DATE	DWG NO 152098
REV	ZONE	REVISION RECORD	DATE / DFTR-ORIG

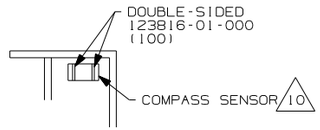

VIEW AB

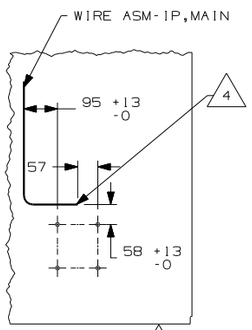

VIEW AA 12 64J 640

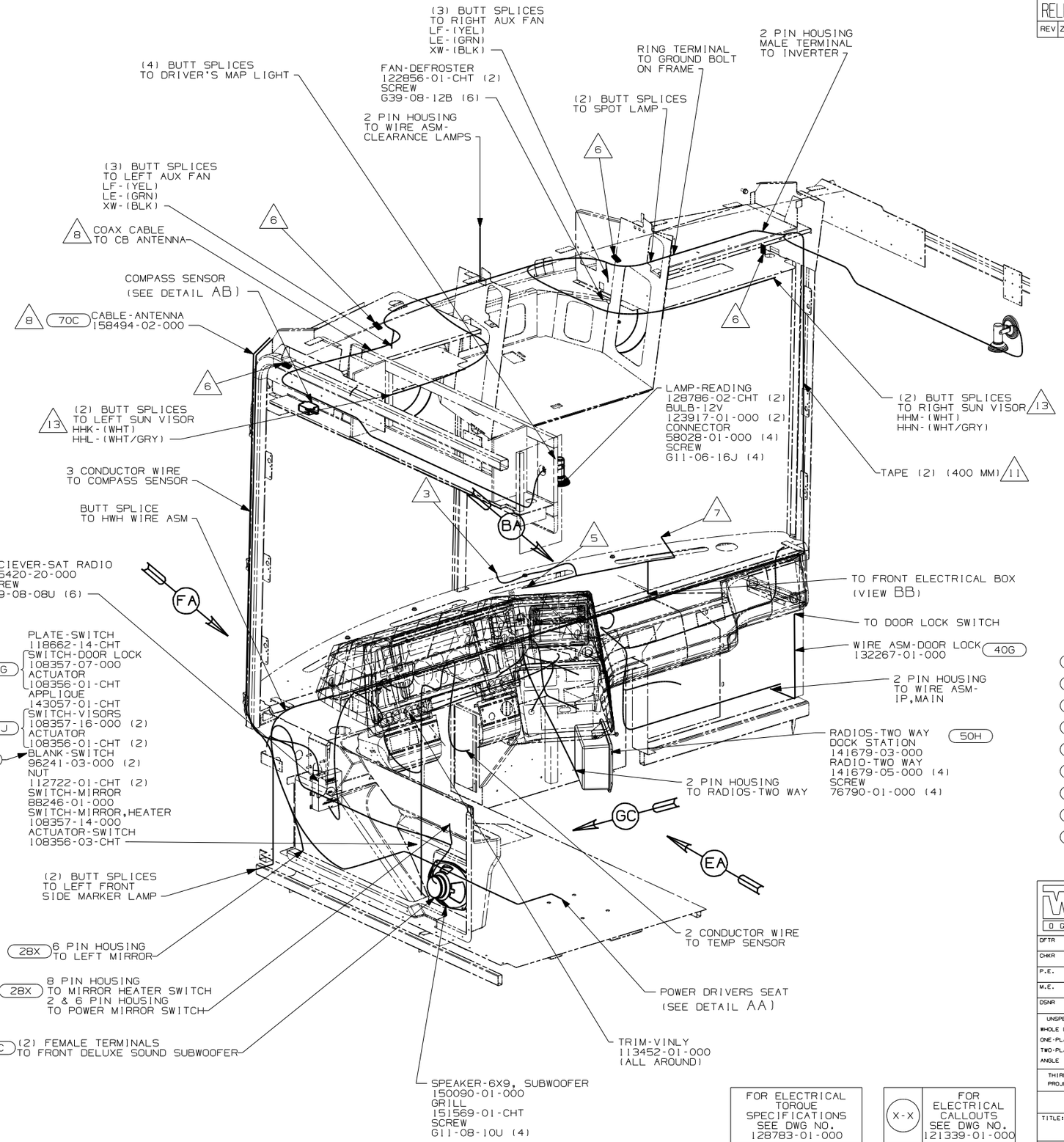

14 CABLE SUPPLIED WITH SATELLITE RADIO RECIEVER. PLUG INTO BACK OF RADIO AND TIE TO IP,MAIN.

13 CUT VISOR WIRING TO 300MM BEFORE CONNECTING.

12 WITHOUT 64J OR 640, COIL WIRE AND TIE BACK WITH MAIN LOOM.

11 USE TAPE 136748-01-000 TO SECURE WIRES IN A-POST.

10 MOUNT SENSOR WITH DOUBLE SIDED TAPE IN BOTTOM OF SIDE OVHD SO THAT SENSOR FACES FORWARD AS STATED ON SENSOR LABEL.

8 SEE ANTENNA INSTL-CB FOR ADDITIONAL INFORMATION..

7 ROUTE WASHER BOTTLE WIRE TOGETHER WITH HEATER CONTROL WIRES THROUGH HOLE IN STEEL ABOVE AND RIGHT OF ENGINE. USE GROMMET 23942-01-000. SEE SHT 14 & 15 FOR ADDITIONAL INFO.

6 USE TIE WIRE MOUNT 92901-01-000 AND TIE-WIRE 93147-01-000 TO SECURE WIRE ASM-IP,MAIN.

5 USE TAPE 8363-01-000 TO SECURE WIRE ASM-IP,MAIN CHASSIS SUPPLIED WIRE ASM-IP, CRUISE WIRING AND HEATER A/C WIRES TOGETHER EVERY 300 IN THIS AREA AFTER ROUTING AND MAKING ALL CONNECTIONS.

4 WIRE ASM MAY BE ROUTED ON EITHER SIDE OF HOLE PATTERN DISTANCE SHOWN AT END POINT OF PATH. LEAVE 675± 50MM OF WIRE.

3 ROUTE WIPER MOTOR WIRING THROUGH HOLE IN BULKHEAD ABOVE & LEFT OF ENGINE. USE GROMMET 88756-01-000. SEE SHT 14 & 15 FOR ADDITIONAL INFORMATION.

2. USE SEAL-TRIM 113452-01-000 TO PROTECT WIRES FROM SHARP EDGES.

1. FOR ADDITIONAL INFORMATION SEE WIRING INSTL-CHASSIS.

NOTES:

70C	RADIO - SATELLITE
64Q	SEAT PED-6-WAY POWER DRIVER
64J	SEAT PED-6-WAY DR/PASS POWER
50H	RADIOS TWO-WAY (4)
40G	POWER DOOR LOCK WITH REMOTE
36N	FANS-DEFROSTER, AUXILLARY
28X	MIRRORS-EXTERIOR W/DEFROST
28K	SUNVISORS - MANUAL (2)
28J	SUNVISORS - POWERED (2)

FOR ELECTRICAL TORQUE SPECIFICATIONS SEE DWG NO. 128783-01-000

X-X FOR ELECTRICAL CALLOUTS SEE DWG NO. 121339-01-000

WINNEBAGO INDUSTRIES

DFTR	ORIG. DATE
CHKR	ALL DIMENSIONS ARE IN MILLIMETERS
P.E.	
M.E.	FIRST USED 06 P-SER
DSNR	

UNSPECIFIED TOLERANCES ARE:
WHOLE DIM (X) :
ONE-PLACE (X.X) :
TWO-PLACE (X.XX) :
ANGLE :

MATERIAL:

THIRD ANGLE PROJECTION

DO NOT SCALE DRAWING

TITLE: WIRING INSTL-FRONT END

SHEET 1 OF 8 PART NO 152098

REF:

DWG NO 152098

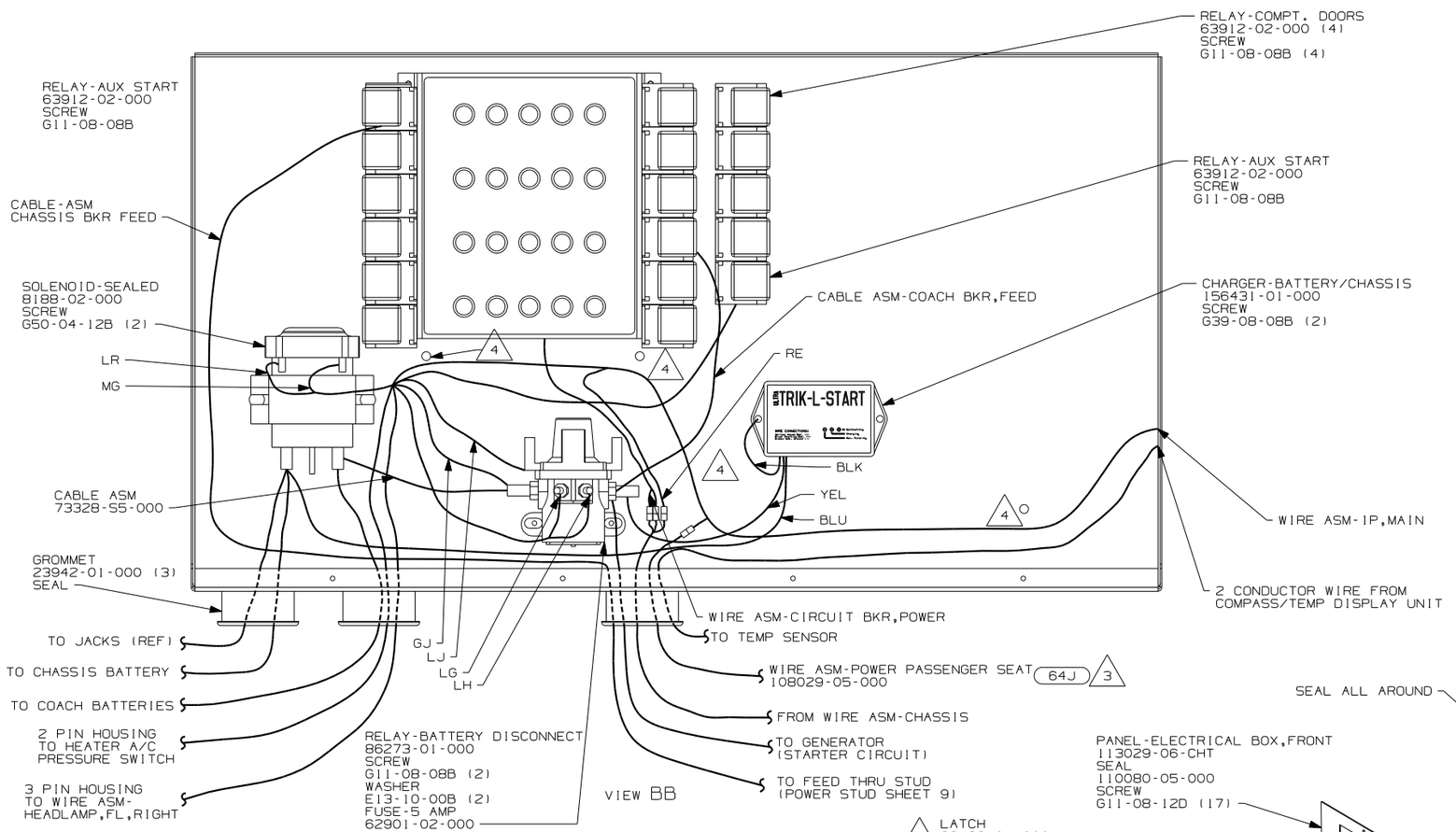

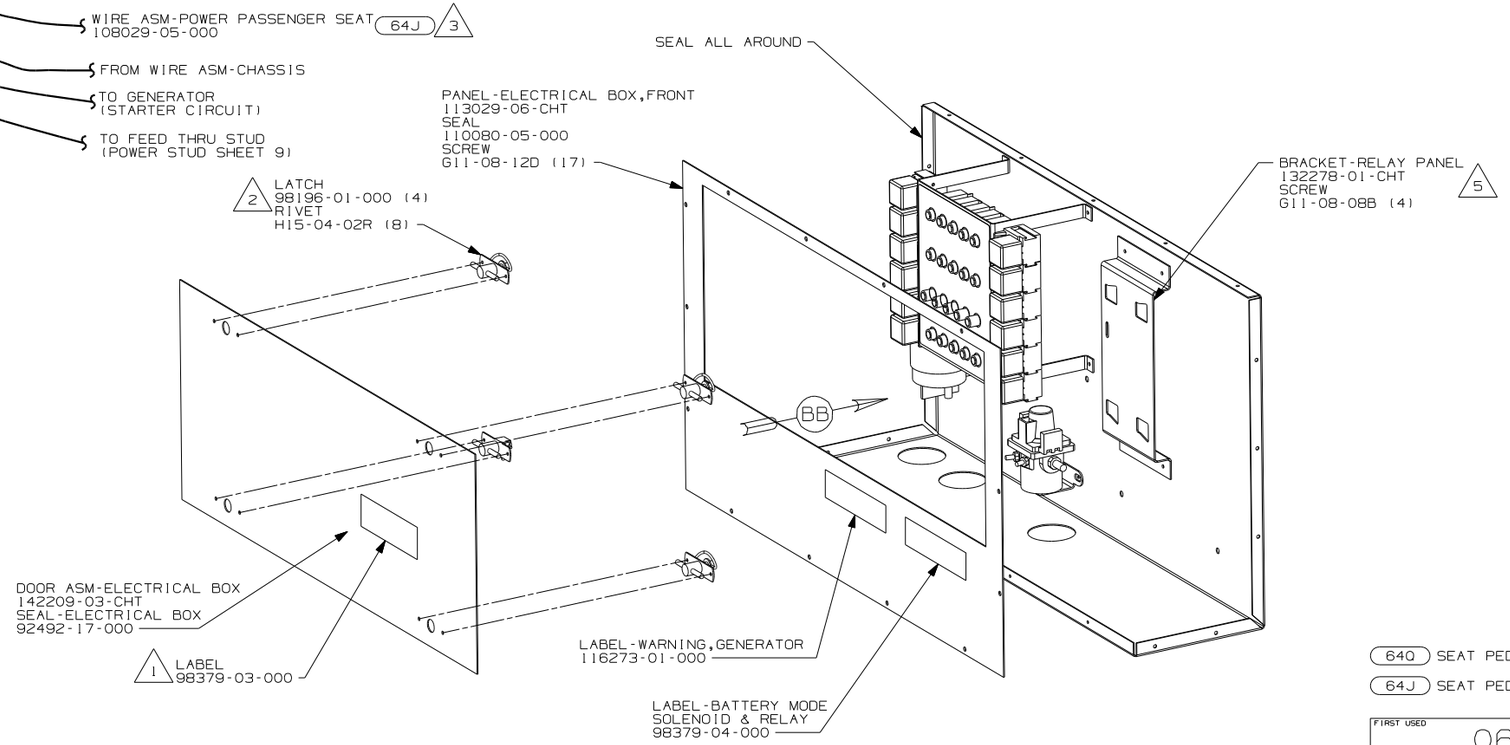

NOTES:

5. DO NOT REMOVE CHASSIS SUPPLIED FUSE COVER.
4. USE TIE-WIRE 8343-02-000 (4)
   TIE-WIRE,MOUNT, 92909-01-000 (4)
3. COIL WIRE ASM UP OUTSIDE ELECTRICAL BOX.
   TO BE ROUTED WITH WIRE ASM-CHASSIS.
2. MOUNT LATCHES WITH TABS TOWARD CENTER OF DOOR.
1. TRIM LABEL AS NECESSARY.

64Q SEAT PED-6-WAY POWER DRIVER
64J SEAT PED-6-WAY DR/PASS POWER

FOR ELECTRICAL TORQUE SPECIFICATIONS SEE DWG NO. 128783-01-000

X-X FOR ELECTRICAL CALLOUTS SEE DWG NO. 121339-01-000

FIRST USED	06 P-SER
	DO NOT SCALE DRAWING
TITLE:	WIRING INSTL-FRONT END
SHEET 2	PART NO 152098

DWG NO 152098

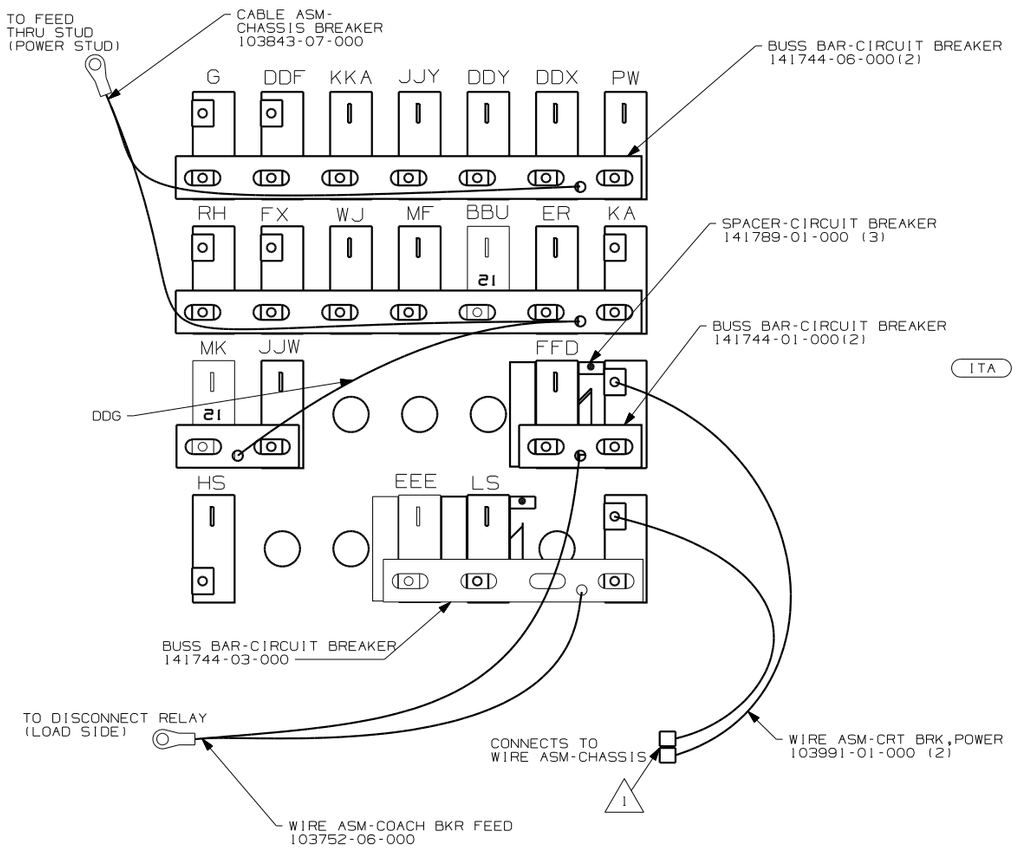

DETAIL CA (BACK VIEW) △2

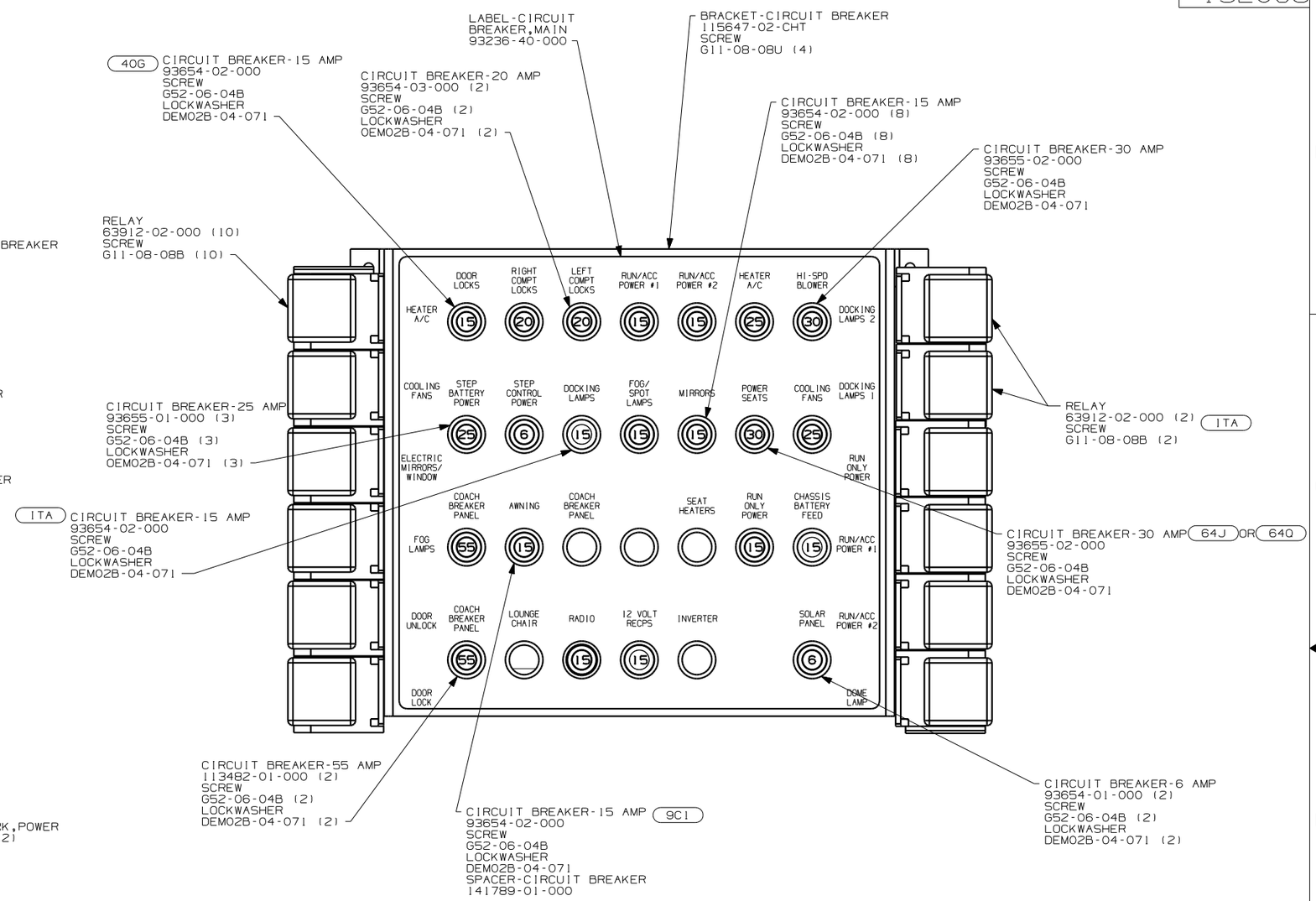

DETAIL CA (FRONT VIEW)

- ITA ITASCA ONLY
- 64J SEAT PED-6-WAY DR/PASS POWER
- 64Q SEAT PED-6-WAY POWER DRIVER
- 63F AWNING-ENTRANCE DOOR
- 40G POWER DOOR LOCK WITH REMOTE
- 40B INVERTER-DC/AC, 300 WATT
- 28X MIRRORS-EXTERIOR W/DEFROST
- 9C1 AWNING-ELECTRIC PACKAGE

NOTES:

△2 CIRCUITS LABELED ON BREAKER ARE FROM WIRE ASM-IP,MAIN UNLESS OTHERWISE NOTED.

△1 CONNECT HOUSINGS TOGETHER.

FOR ELECTRICAL TORQUE SPECIFICATIONS SEE DWG NO. 128783-01-000

X-X FOR ELECTRICAL CALLOUTS SEE DWG NO. 121339-01-000

FIRST USED 06 P-SER

DO NOT SCALE DRAWING

TITLE: WIRING INSTL-FRONT END

SHEET 3 PART NO 152098

DWG NO 152098

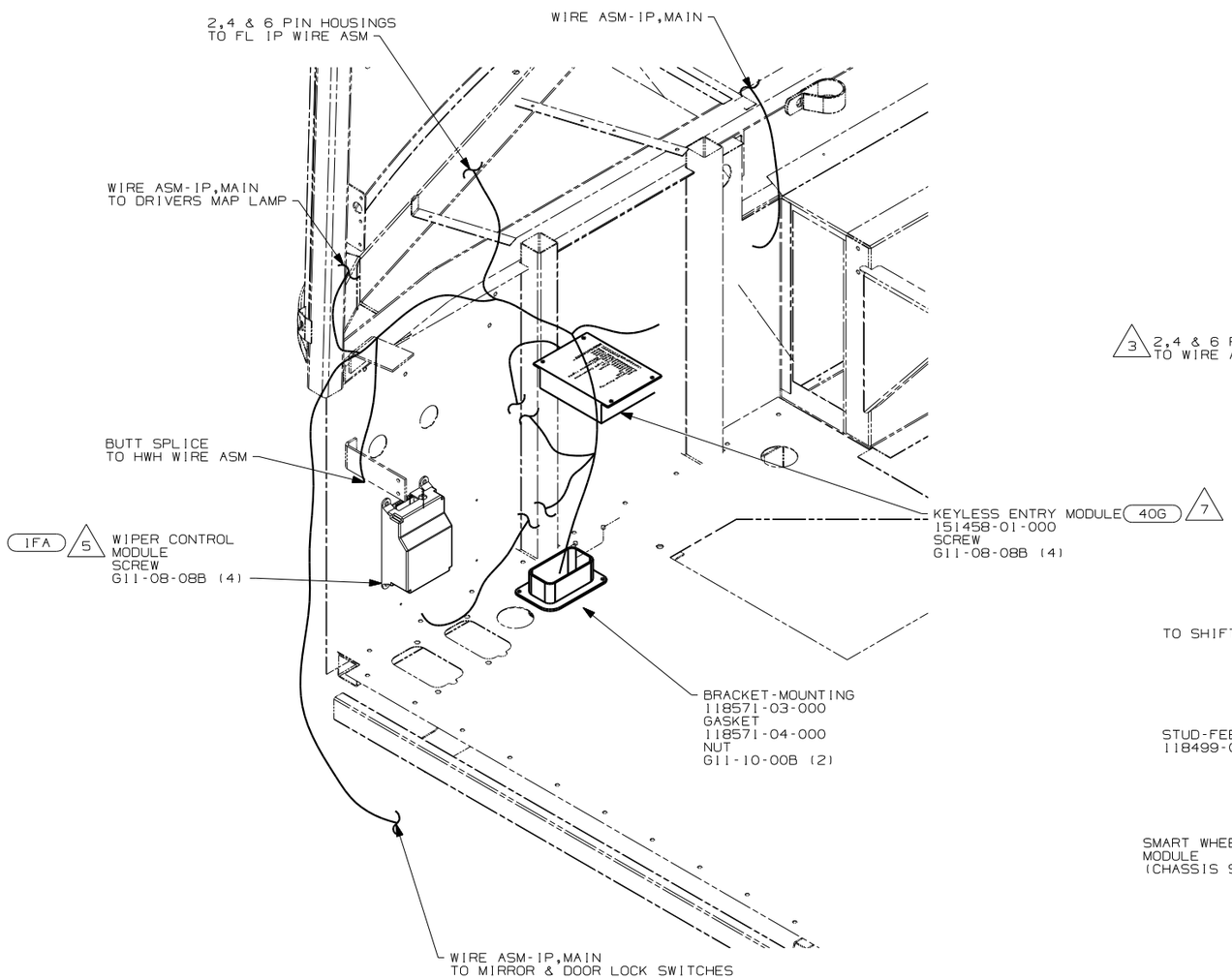

VIEW DA
(WINNEBAGO WIRING SHOWN)

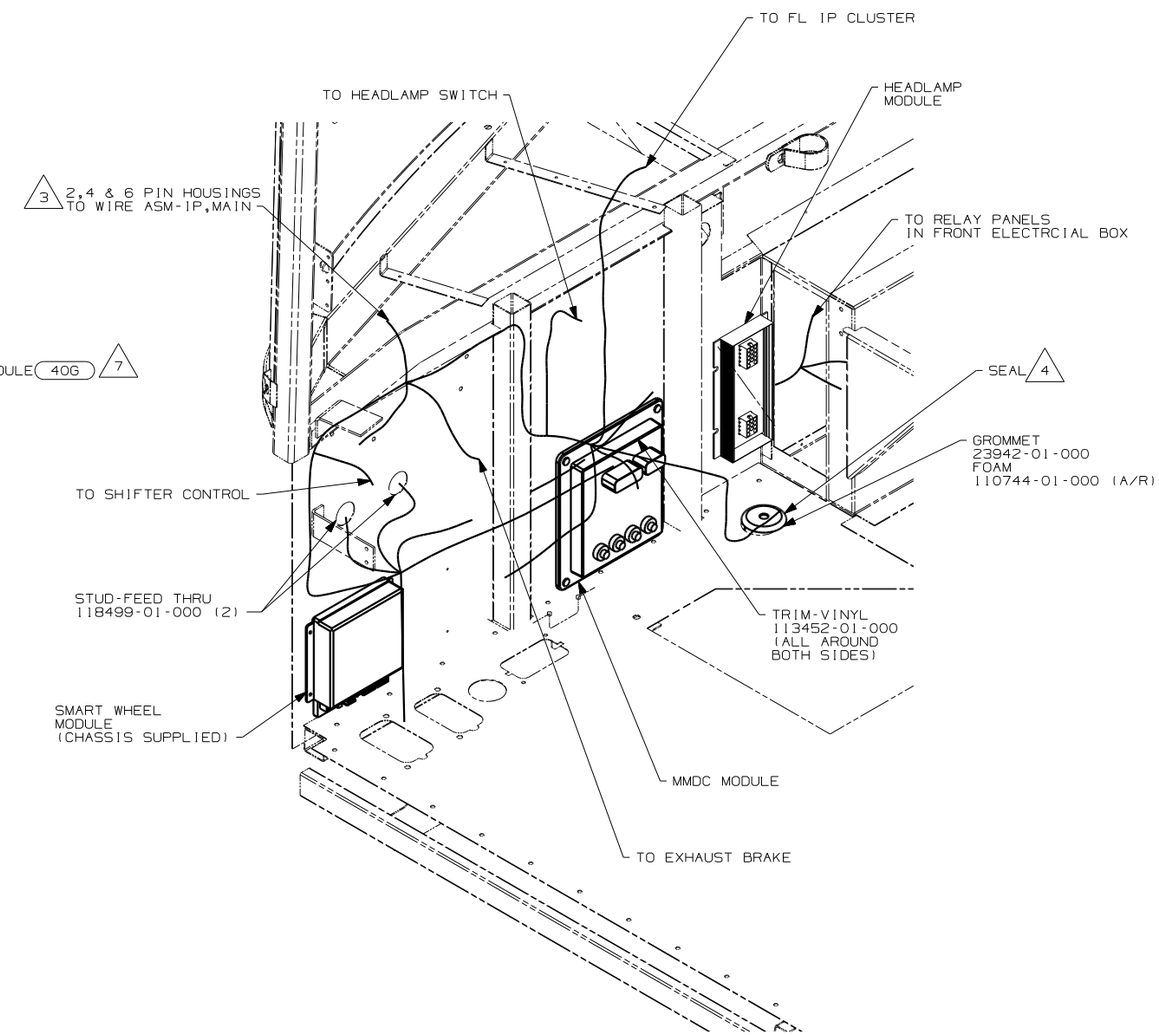

VIEW DA 2
(CHASSIS WIRING SHOWN)

7 MOUNT TO PLENUM PANEL AS SHOWN.

6 PUT 1 SEAL IN FRONT OF HOLE AT CAB PREP.

5 SEE WIPER CONTROL INFORMATION FOR INSTALLATION INSTRUCTION.

4 ROUTE PARK BRAKE VALVE AND AIR LINES FOR DASH GAUGES THRU HERE. COVER WITH CONVOLUTE TUBING 41953 WHERE VISIBLE.

3 DO NOT USE SEAT BELT 2 PIN HOUSING.

2 FL IP WIRE ASM SHOULD BE TIED PRIOR TO INSTALLATION. SEE DETAIL HA FOR TYING INSTRUCTIONS.

1. BUNDLE AND SECURE ALL EXCESS WIRE.

NOTES:

40G POWER DOOR LOCK WITH REMOTE

265 CODES/STANDARDS-CSA/CMVSS

FOR ELECTRICAL TORQUE SPECIFICATIONS SEE DWG NO. 128783-01-000

X-X FOR ELECTRICAL CALLOUTS SEE DWG NO. 121339-01-000

FIRST USED 06 P-SER

DO NOT SCALE DRAWING

TITLE: WIRING INSTL-FRONT END

SHEET 4

PART NO 152098

DWG NO 152098

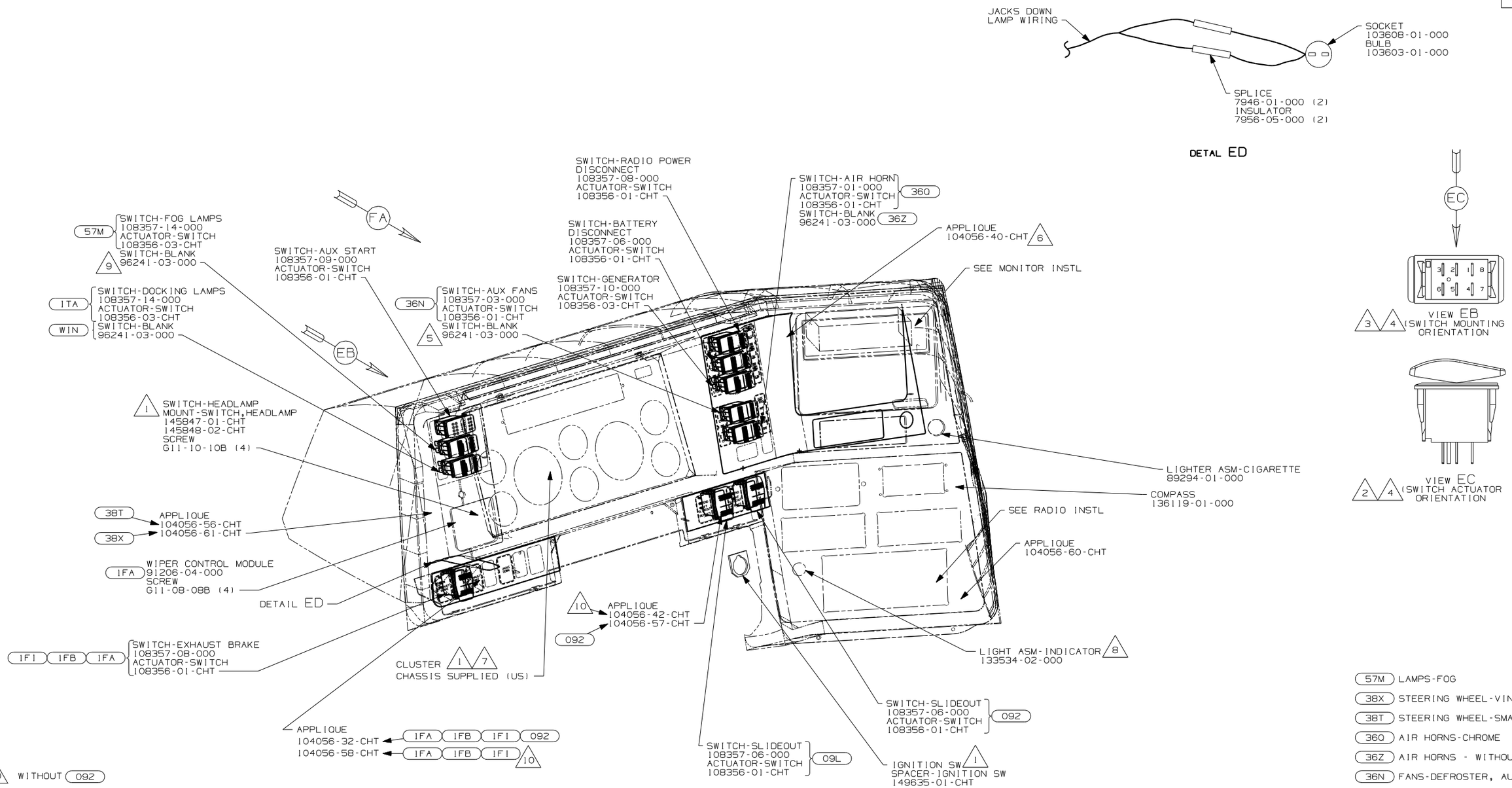

NOTES:

1. CHASSIS SUPPLIED.
2. SAME FOR ALL SWITCHES.
3. SAME FOR ALL DASH SWITCHES EXCEPT FOG LAMPS, DOCKING LAMPS AND GENERATOR SWITCHES.
4. SWITCHES SHOWN WITHOUT WIRE ASM-HOUSING CONNECTED.
5. WITHOUT 36N
6. COVER CLEAR LEGEND ON BEZEL WITH FILM 77031-01-000 (BLANK).
7. SEE DETAIL GA FOR INSTRUMENT CLUSTER ASSEMBLY INSTRUCTIONS.
8. DRILL 19.0 DIAMETER HOLE AT LOWER DIMPLE LOCATIONL.
9. WITHOUT 57M
10. WITHOUT 092

57M	LAMPS-FOG
38X	STEERING WHEEL-VINYL WRAPPED
38T	STEERING WHEEL-SMART WHEEL
36Q	AIR HORNS-CHROME
36Z	AIR HORNS - WITHOUT
36N	FANS-DEFROSTER, AUXILIARY
IFI	FRTL 27,910 350HP 7.2L 6SPD
IFB	FRTL 300HP 5.9L 6SPD AL WHLS
IFA	FRTL 27,910 300 5.9L 5-SP
092	SLIDEOUT ROOM - FRONT RIGHT
09L	SLIDEOUT ROOM FRONT LEFT
WIN	WINNEBAGO ONLY
ITA	ITASCA ONLY

X-X FOR ELECTRICAL CALLOUTS SEE DWG NO. 121339-01-000

FIRST USED 06 P-SER

DO NOT SCALE DRAWING

TITLE: WIRING INSTL-FRONT END

SHEET 5 PART NO 152098

DWG NO 152098

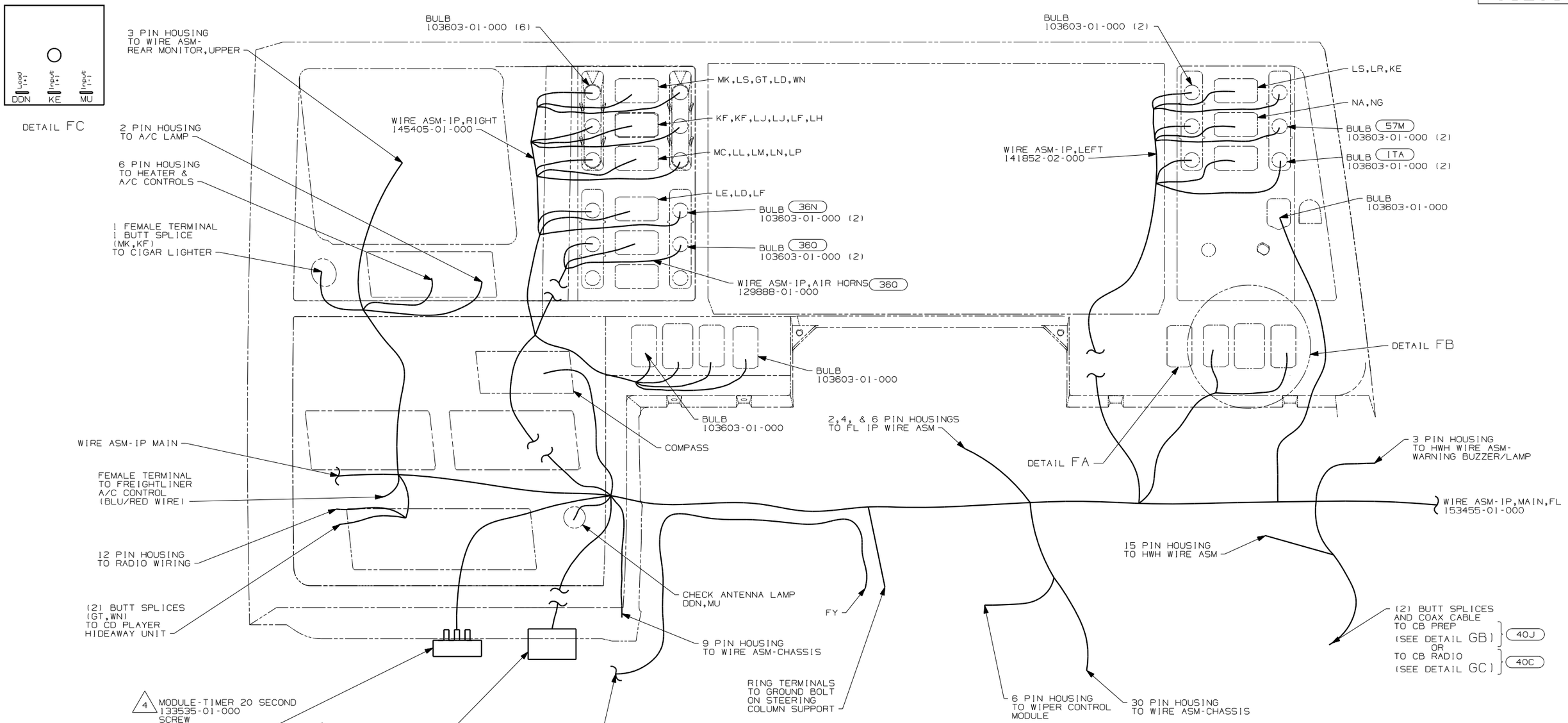

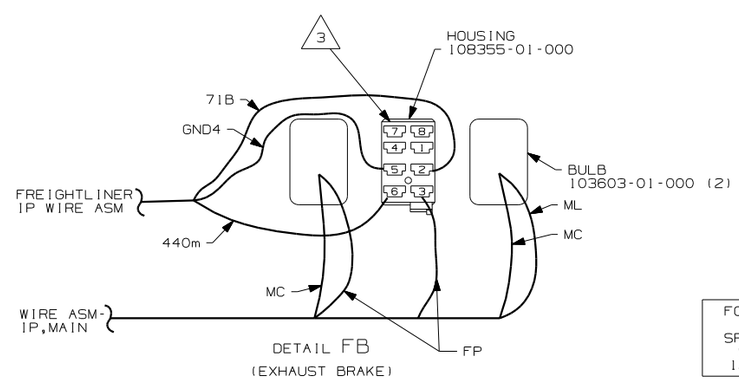

NOTES:

6. TAPE SLIDEROOM #3 SWITCH BACK INTO LOOM WITH 092.

5. MOUNT ON TOP LEFT REAR CORNER OF PANEL-COVER, RADIATOR.

4. MOUNT ON TOP LEFT REAR CORNER OF PANEL-COVER, RADIATOR.

3. UNHOUSE EXHAUST BRAKE SWITCH HOUSING ON CHASSIS IP WIRE ASM. THEN REHOUSE TERMINALS IN HOUSING AS SHOWN.

2. CUT TERMINALS OFF FL WIRE ASSEMBLY AND BUTT SPLICE.

1. CHASSIS SUPPLIED.

64J	SEAT PED-6-WAY DR/PASS POWER
57M	LAMPS-FOG
40J	CB RADIO PREP
40C	RADIO - CB
36Q	AIR HORNS-CHROME
36N	FANS-DEFROSTER, AUXILIARY
092	SLIDEOUT ROOM - FRONT RIGHT
ITA	ITASCA ONLY

FOR ELECTRICAL TORQUE SPECIFICATIONS SEE DWG NO. 128783-01-000

X-X FOR ELECTRICAL CALLOUTS SEE DWG NO. 121339-01-000

FIRST USED 06 P-SER

DO NOT SCALE DRAWING

TITLE: WIRING INSTL-FRONT END

SHEET 6 PART NO 152098

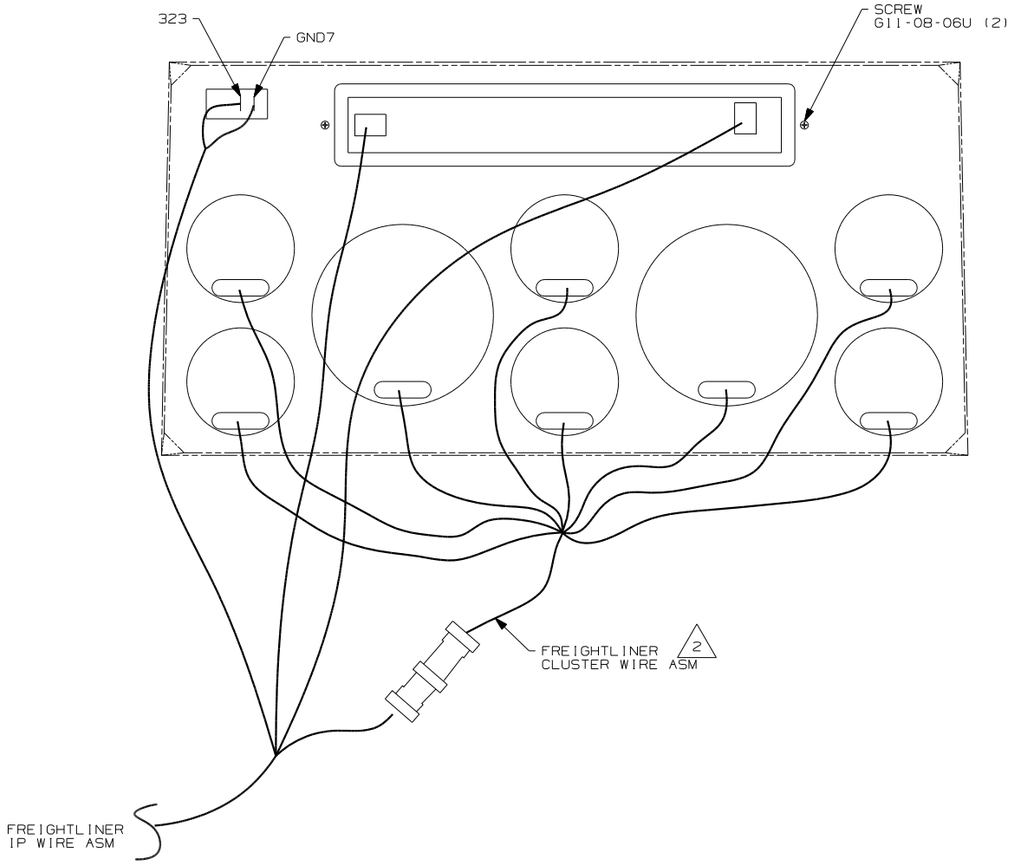

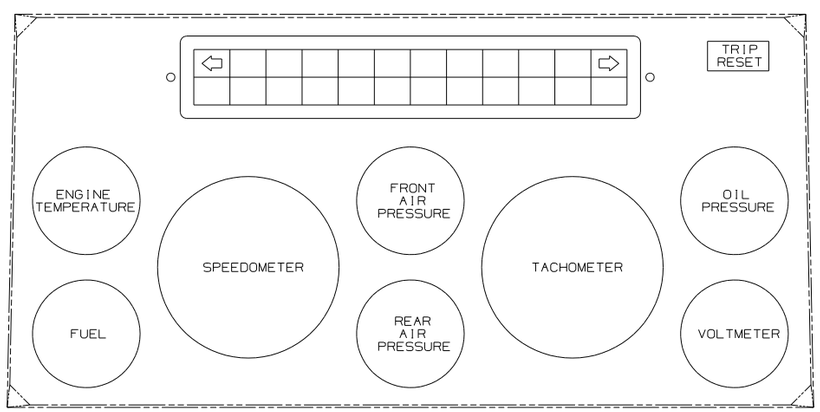

DETAIL GA

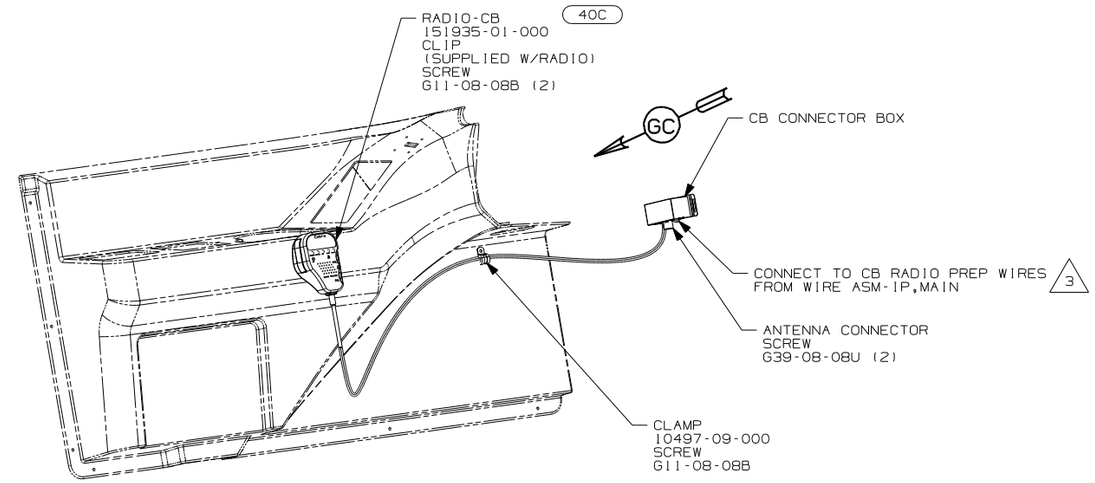

DETAIL GB 40C

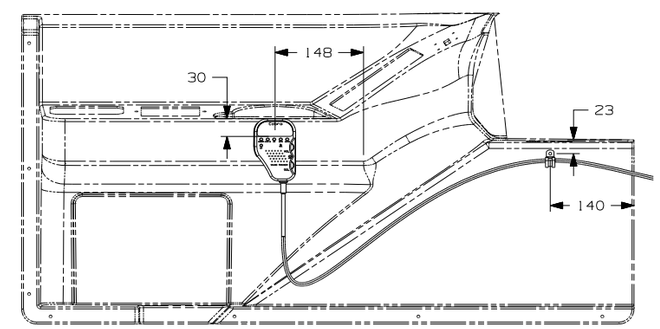

DETAIL GC 40C

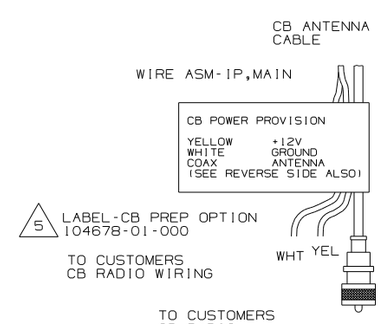

DETAIL GD 40J

40J CB RADIO PREP

40C RADIO - CB

3 CONNECT RED FROM CONNECTOR TO YELLOW IN IP,MAIN AND BLK/RED TO WHITE.

2 ANY PLUG ON CLUSTER WIRE ASM WILL FIT ANY GAUGE.

1. ALL GAUGES, RETAINER CLIPS AND FASTENERS ARE CHASSIS SUPPLIED.

NOTES:

FIRST USED	06 P-SER
DO NOT SCALE DRAWING	
TITLE: WIRING INSTL-FRONT END	
SHEET 7	PART NO 152098

DWG NO 152098

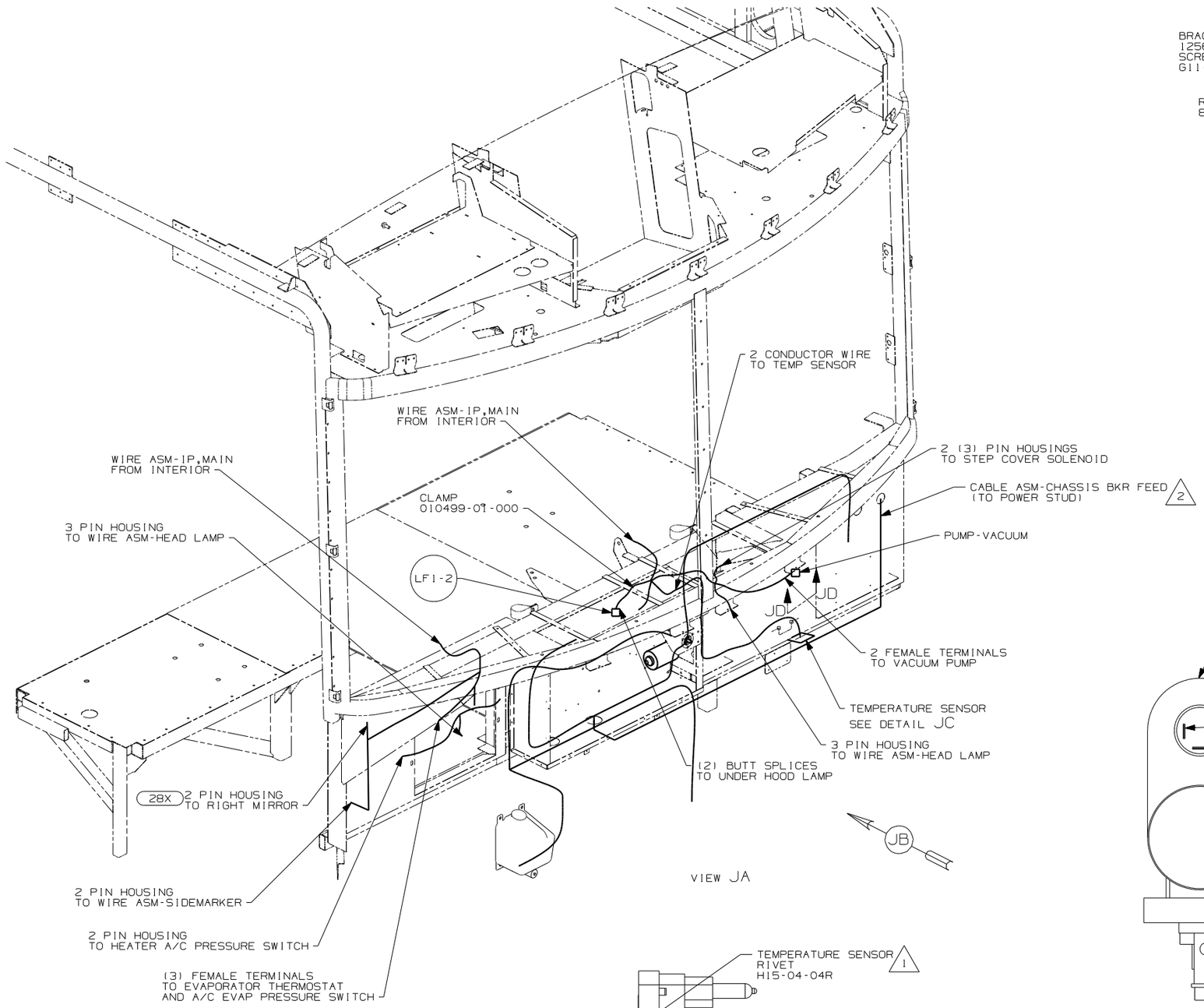

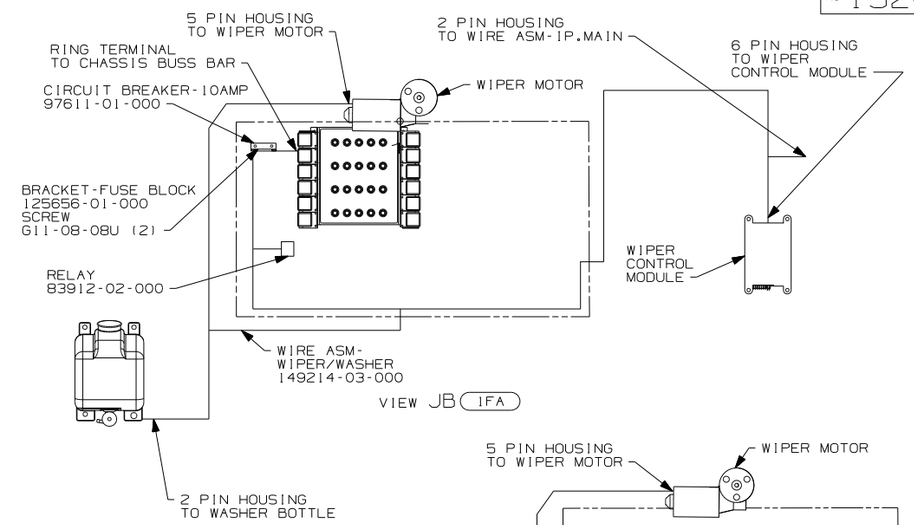

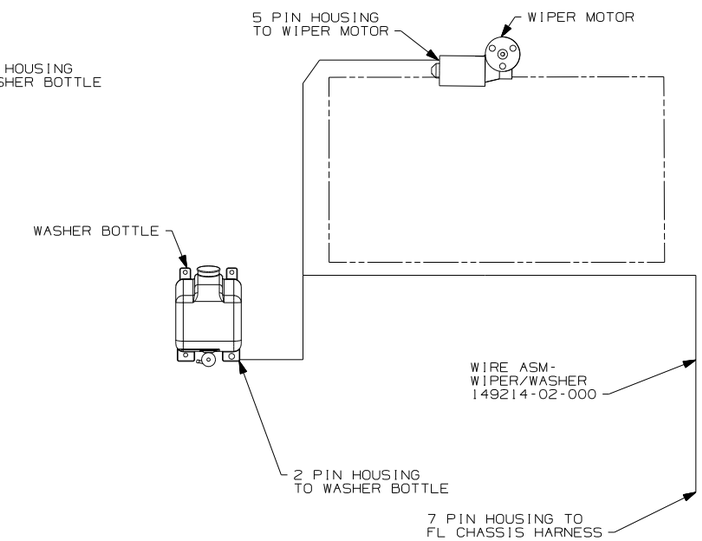

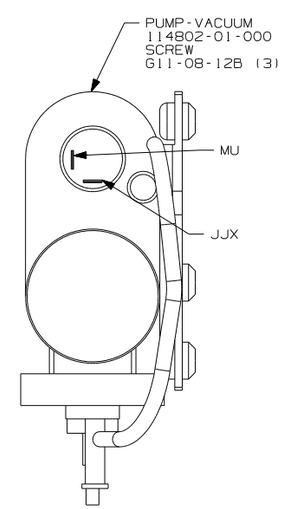

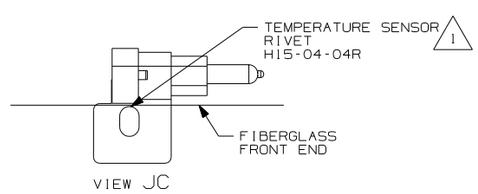

2 SEE SHEET 2 FOR ADDITIONAL INFORMATION.

1 DRILL 4.8 DIA HOLE AND MOUNT ON LOWER FLANGE OF FRONT END.

NOTES:

28X MIRRORS-EXTERIOR W/DEFROST

1F1 FRTL 27,910 350HP 7.2L 6SPD

1FB FRTL 300HP 5.9L 6SPD AL WHLS

1FA FRTL 27,910 300 5.9L 5-SP

FOR ELECTRICAL TORQUE SPECIFICATIONS SEE DWG NO. 128783-01-000

X-X FOR ELECTRICAL CALLOUTS SEE DWG NO. 121339-01-000

FIRST USED 06 P-SER

DO NOT SCALE DRAWING

TITLE: WIRING INSTL-FRONT END

SHEET 8 PART NO 152098

DRAWING NO.	MODEL	SHEET
152094-01	R & S SERIES	1,5
152094-02	P-SERIES	2,5
152094-03	G-SERIES	3,5
152094-04	F-SERIES	4,5

RELEASE	REV A	DATE	DWG NO 152094
REV	ZONE	REVISION RECORD	DATE / DFTR-ORIG

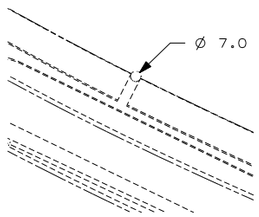

DETAIL AA
(TOP VIEW)

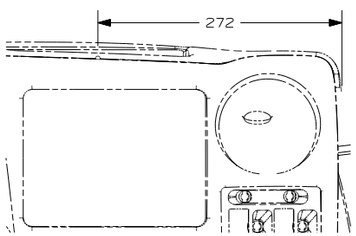

DETAIL AA

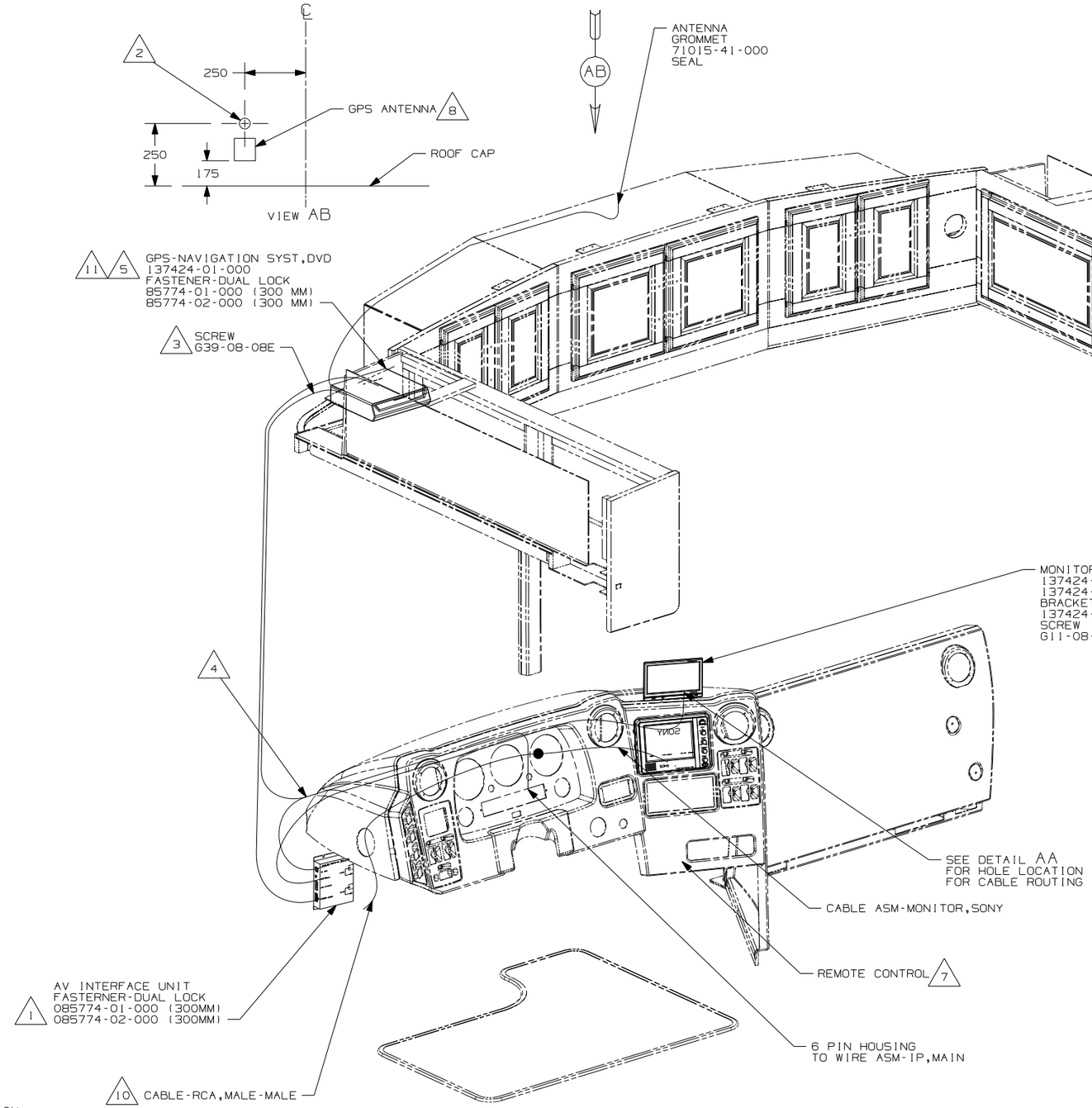

11 MOUNT GPS-NAVIGATION SYST. IN OVERHEAD AS FAR TO THE LEFT AS POSSIBLE. WITH (52T) MOUNT GPS-NAVIGATION SYST. TO THE RIGHT OF THE CD CHANGER AS FAR TO THE LEFT AS POSSIBLE.

10 S-SERIES ONLY

9 R-SERIES ONLY

8 CLEAN ROOF & ANTENNA AND USE TAPE-FOAM,DBL 076322-05 TO ATTACH ANTENNA TO ROOF.

7 MOUNT REMOTE WITH WITH SUPPLIED BRACKET AND SCREWS.

6 MOUNT MONITOR SO IT IS CENTERED IN RECESSED AREA ON DASH.

5 LOAD MAP DVD INTO PLAYER AND SAVE DVD CASE AND DOCUMENTATION WITH OWNER'S MANUAL.

4 SEE SHEET 5 FOR SPLICING INFORMATION.

3 PULL BLACK WIRE FROM LOOM AND SCREW TO STEEL SIDE-PANEL OF OVHD.

2 DRILL 15MM HOLE IN FIBERGLASS ROOF CAP AND SLIDE ANTENNA WIRE INTO GROMMET AND SEAL.

1 AV INTERFACE UNIT COMES WITH MONITOR-LCD,COLOR 6.5"

NOTES:

X-X FOR ELECTRICAL CALLOUTS SEE DWG NO. 121339-01-000

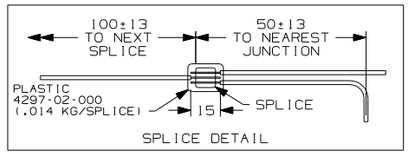

SPLICE DETAIL

(52T) CD CHANGER-10 DISC

(15D) GPS-NAVIGATION SYSTEM

(15D)

WINNEBAGO INDUSTRIES

DFTR	ORIG. DATE
CHKR	ALL DIMENSIONS ARE IN MILLIMETERS
P.E.	
M.E.	FIRST USED 06 S-SER
DSNR	

UNSPECIFIED TOLERANCES ARE:
WHOLE DIM (X) :
ONE-PLACE (X.X) :
TWO-PLACE (X.XX) :
ANGLE :
1

MATERIAL:

THIRD ANGLE PROJECTION

DO NOT SCALE DRAWING

TITLE: WIRING INSTL-GPS

SHEET 1 OF 5 | PART NO 152094 | REV

DWG NO 152094

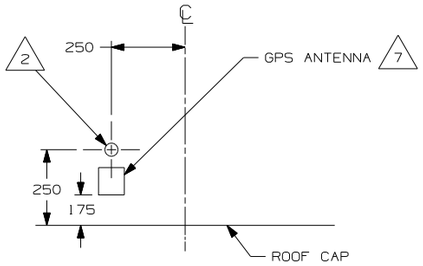

VIEW BB

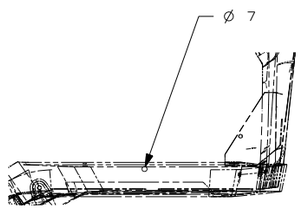

DETAIL BA
(TOP VIEW)

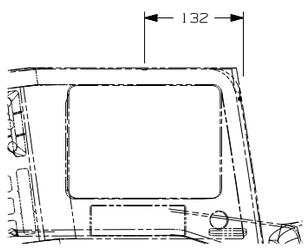

DETAIL BA

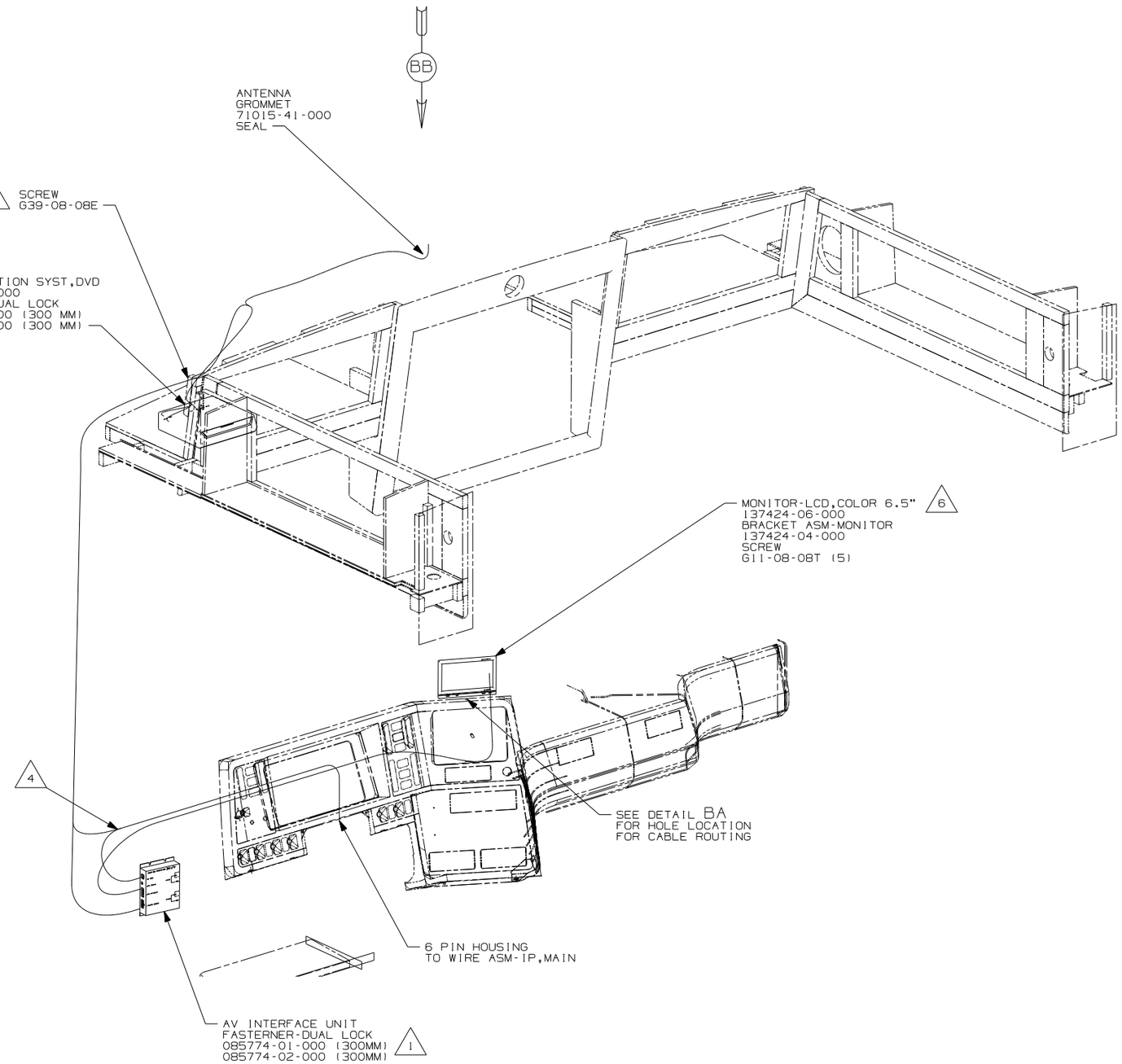

NOTES:

8. MOUNT GPS-NAVIGATION SYST. IN OVERHEAD AS FAR TO THE LEFT AS POSSIBLE. WITH (52T) MOUNT GPS-NAVIGATION SYST. TO THE RIGHT OF THE CD CHANGER AS FAR TO THE LEFT AS POSSIBLE.
7. CLEAN ROOF & ANTENNA AND USE TAPE-FOAM,DBL 076322-05 TO ATTACH ANTENNA TO ROOF.
6. MOUNT MONITOR SO IT IS CENTERED ABOVE REAR MONITOR.
5. LOAD MAP DVD INTO PLAYER AND SAVE DVD CASE AND DOCUMENTATION WITH OWNER'S MANUAL.
4. SEE SHEET 5 FOR SPLICING INFORMATION.
3. PULL BLACK WIRE FROM LOOM AND SCREW TO STEEL SIDE-PANEL OF OVHD.
2. DRILL 15MM HOLE IN FIBERGLASS ROOF CAP AND SLIDE ANTENNA WIRE INTO GROMMET AND SEAL.
1. AV INTERFACE UNIT COMES WITH MONITOR-LCD,COLOR 6.5"

(52T) CD CHANGER-10 DISC
(15D) GPS-NAVIGATION SYSTEM

(15D)

FIRST USED	06 P-SER
DO NOT SCALE DRAWING	
TITLE:	WIRING INSTL-GPS
SHEET 2	PART NO 152094 REV

DWG NO 152094

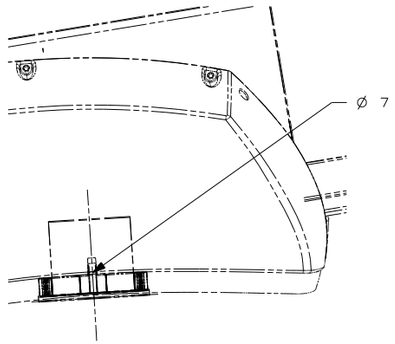

DETAIL CA
(TOP VIEW)

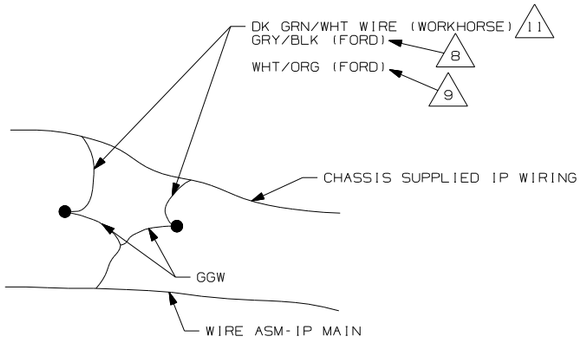

DETAIL CC

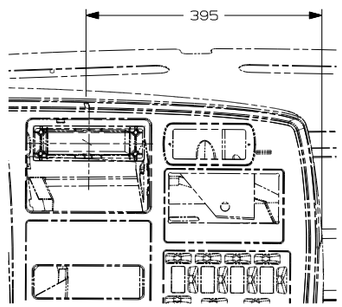

DETAIL CA

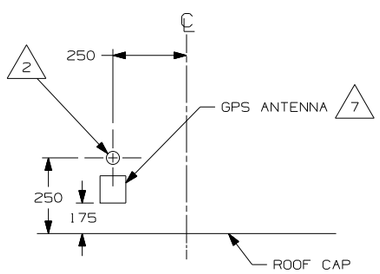

VIEW CB

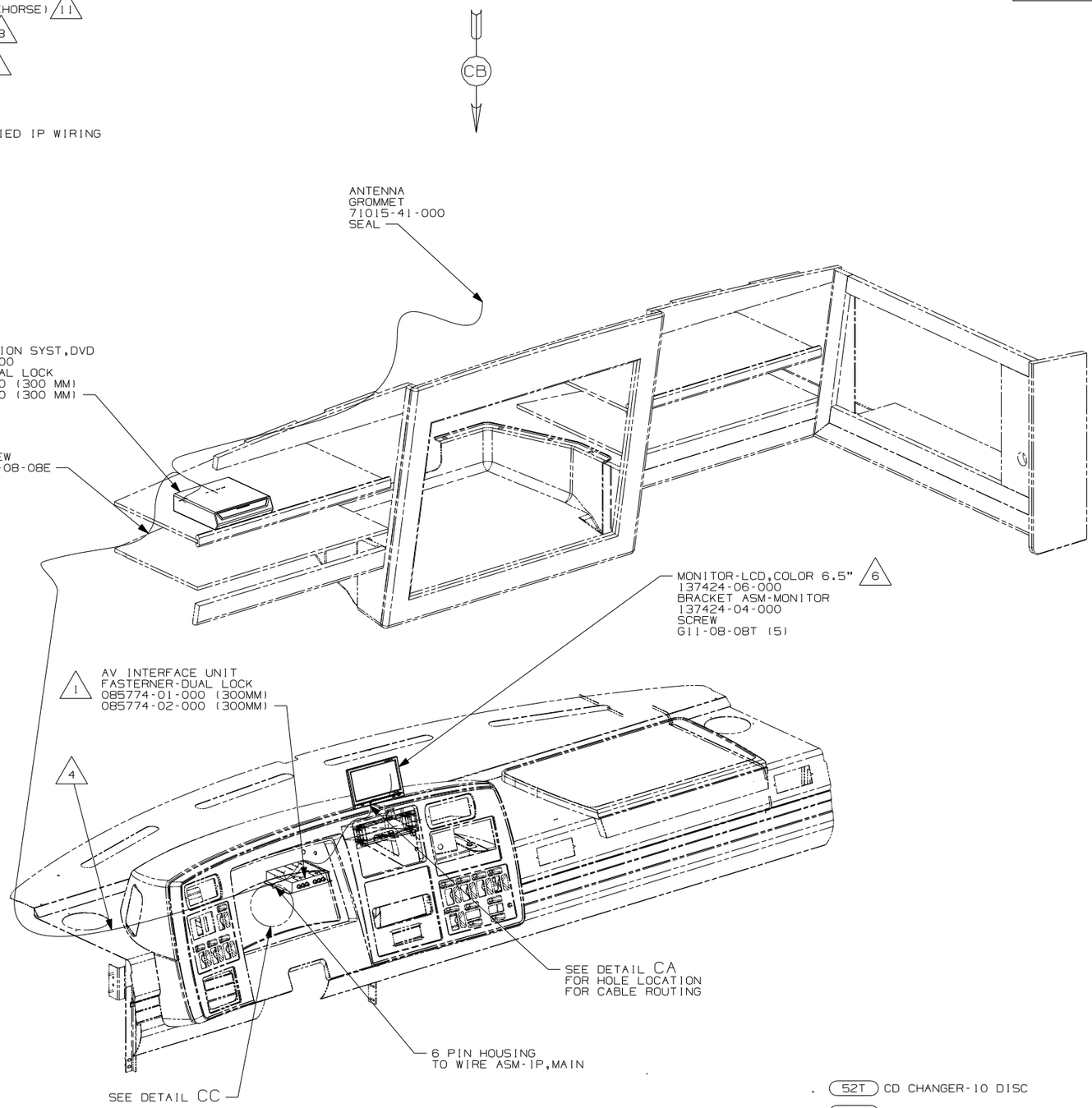

NOTES:

11. 2005 WORKHORSE SHOWN. FOR 2006 WORKHORSE, CONNECT GGW TO BROWN WIRE WITH 1 PIN CONNECTOR LABELED "GPS SPD SIG" LOCATED BELOW & LEFT OF STEERING COLUMN SUPPORT.
10. MOUNT GPS-NAVIGATION SYST. IN OVERHEAD AS FAR TO THE LEFT AS POSSIBLE. WITH (52T) MOUNT GPS-NAVIGATION SYST. TO THE RIGHT OF THE CD CHANGER AS FAR TO THE LEFT AS POSSIBLE.
9. 2006 FORD CHASSIS. CONNECT GGW TO WHT/ORG WIRE LABELED "VS OUTPUT" LOCATED ABOVE STEERING COLUMN SUPPORT.
8. 2005 FORD CHASASIS FROM PIN 7 OF 16 PIN FORD CONNECTOR.
7. CLEAN ROOF & ANTENNA AND USE TAPE-FOAM,DBL 076322-05 TO ATTACH ANTENNA TO ROOF.
6. MOUNT MONITOR SO IT IS CENTERED ABOVE REAR MONITOR.
5. LOAD MAP DVD INTO PLAYER AND SAVE DVD CASE AND DOCUMENTATION WITH OWNER'S MANUAL.
4. SEE SHEET 5 FOR SPLICING INFORMATION.
3. PULL BLACK WIRE FROM LOOM AND SCREW TO STEEL SIDE-PANEL OF OVHD.
2. DRILL 15MM HOLE IN FIBERGLASS ROOF CAP AND SLIDE ANTENNA WIRE INTO GROMMET AND SEAL.
1. AV INTERFACE UNIT COMES WITH MONITOR-LCD,COLOR 6.5"

(52T) CD CHANGER-10 DISC
(15D) GPS-NAVIGATION SYSTEM

(15D)

FIRST USED	06 G-SER
	DO NOT SCALE DRAWING
TITLE:	WIRING INSTL-GPS
SHEET 3	PART NO 152094 REV

DWG NO 152094

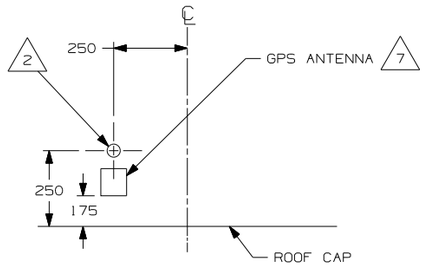

VIEW DB

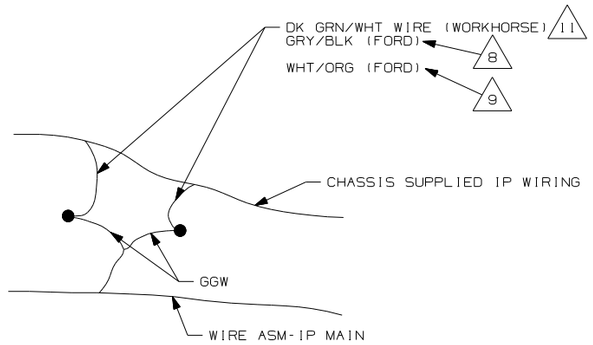

DETAIL DC

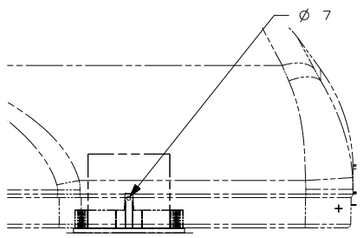

DETAIL DA
(TOP VIEW)

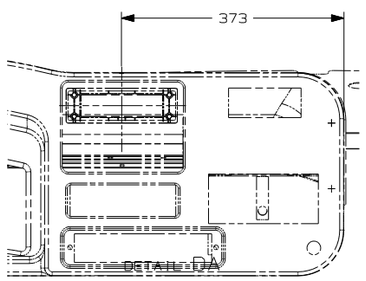

DETAIL DA

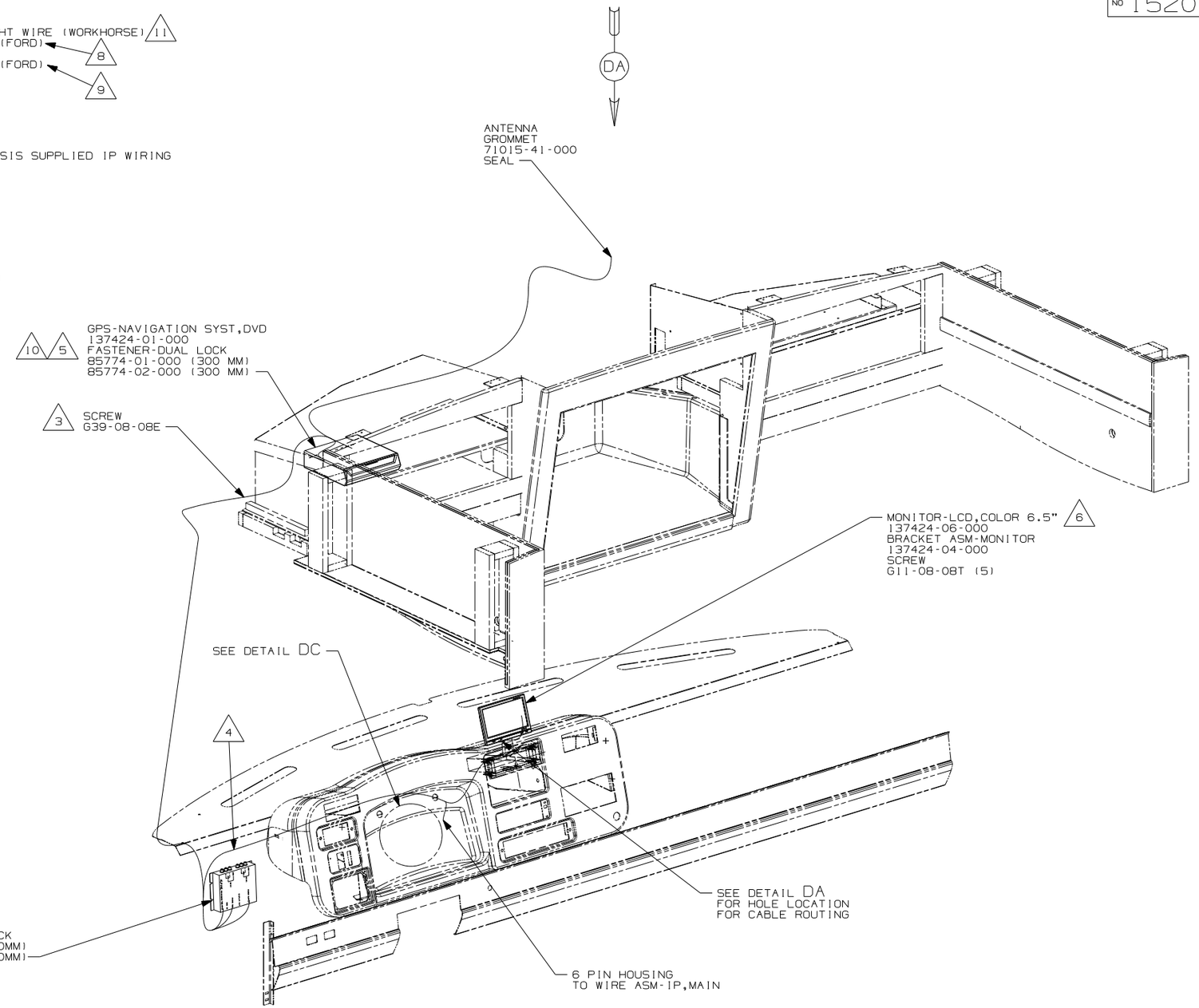

NOTES:

11. 2005 WORKHORSE SHOWN. FOR 2006 WORKHORSE, CONNECT GGW TO BROWN WIRE WITH 1 PIN CONNECTOR LABELED "GPS SPD SIG" LOCATED BELOW & LEFT OF STEERING COLUMN SUPPORT.
10. MOUNT GPS-NAVIGATION SYST. IN OVERHEAD AS FAR TO THE LEFT AS POSSIBLE. WITH (52T) MOUNT GPS-NAVIGATION SYST. TO THE RIGHT OF THE CD CHANGER AS FAR TO THE LEFT AS POSSIBLE.
9. 2006 FORD CHASSIS. CONNECT GGW TO WHT/ORG WIRE LABELED "VS OUTPUT" LOCATED ABOVE STEERING COLUMN SUPPORT.
8. 2005 FORD CHASSIS. FROM PIN 7 OF 16 PIN FORD CONNECTOR.
7. CLEAN ROOF & ANTENNA AND USE TAPE-FOAM,DBL 076322-05 TO ATTACH ANTENNA TO ROOF.
6. MOUNT MONITOR SO IT IS CENTERED ABOVE REAR MONITOR.
5. LOAD MAP DVD INTO PLAYER AND SAVE DVD CASE AND DOCUMENTATION WITH OWNER'S MANUAL.
4. SEE SHEET 5 FOR SPLICING INFORMATION.
3. PULL BLACK WIRE FROM LOOM AND SCREW TO STEEL SIDE-PANEL OF OVHD.
2. DRILL 15MM HOLE IN FIBERGLASS ROOF CAP AND SLIDE ANTENNA WIRE INTO GROMMET AND SEAL.
1. AV INTERFACE UNIT COMES WITH MONITOR-LCD,COLOR 6.5"

(52T) CD CHANGER-10 DISC
(15D) GPS-NAVIGATION SYSTEM

(15D)

FIRST USED	06 F-SERIES
	DO NOT SCALE DRAWING
TITLE:	WIRING INSTL-GPS
SHEET 4	PART NO 152094 REV

DWG NO 152094

GPS CIRCUIT	FUNCTION	WIN CIRCUIT
YELLOW	BATTERY (+)	MK
BLACK	GROUND	GGV
RED	IGNITION (+)	LD
WHITE/BLUE	ILLUMINATION (+)	MM
ORANGE/WHITE	REVERSE LIGHTS (+)	NOT USED
GREEN/WHITE	VEHICLE SPEED SENSOR (VSS)	GGW
YELLOW/BLUE (PIN 7)	PARKING BRAKE (-)	NOT USED
PINK/SKY BLUE	IN-INT INTERUPT (-) (AUDIO MUTE)	(NOT USED)
YELLOW/BLACK	FOOT BRAKE (+)	(NOT USED)
WHITE/BROWN	REMOTE	(NOT USED)

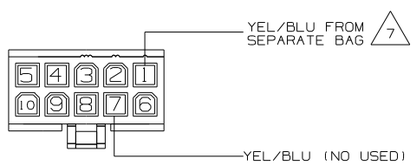

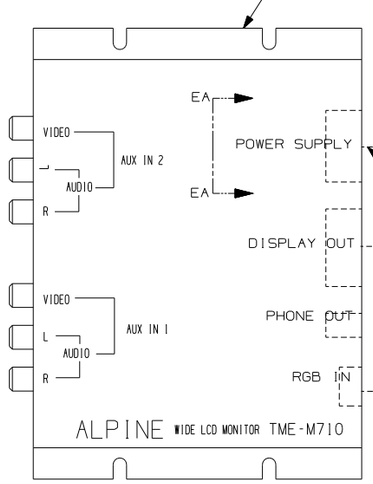

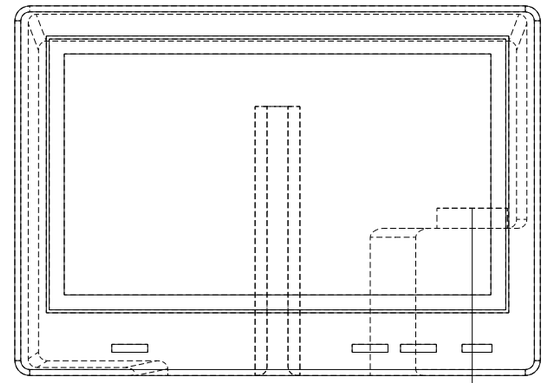

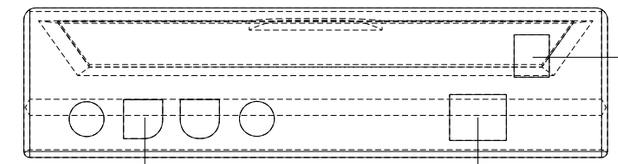

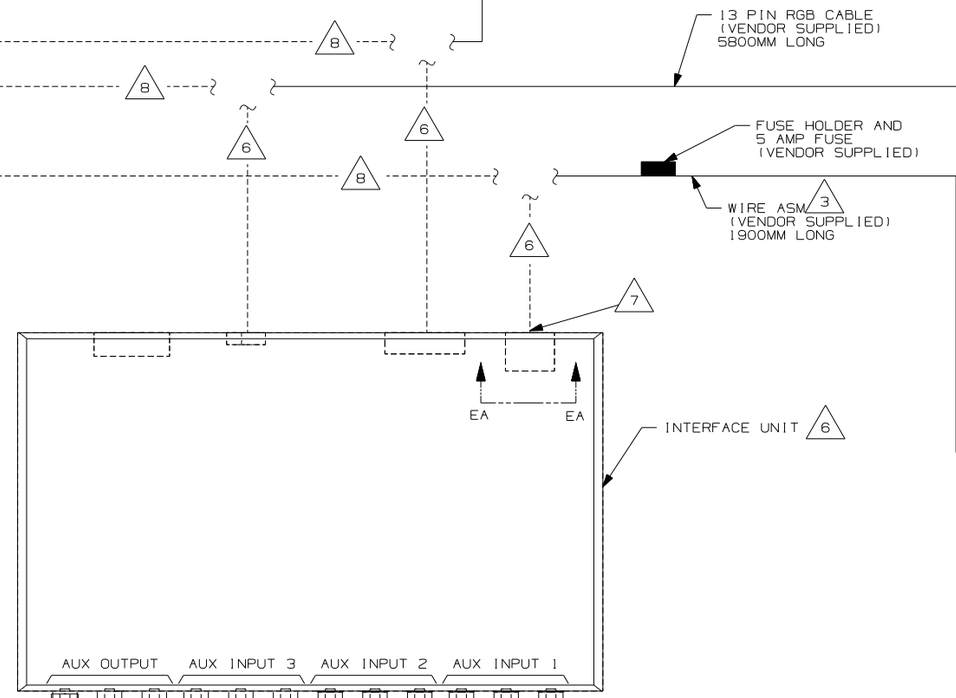

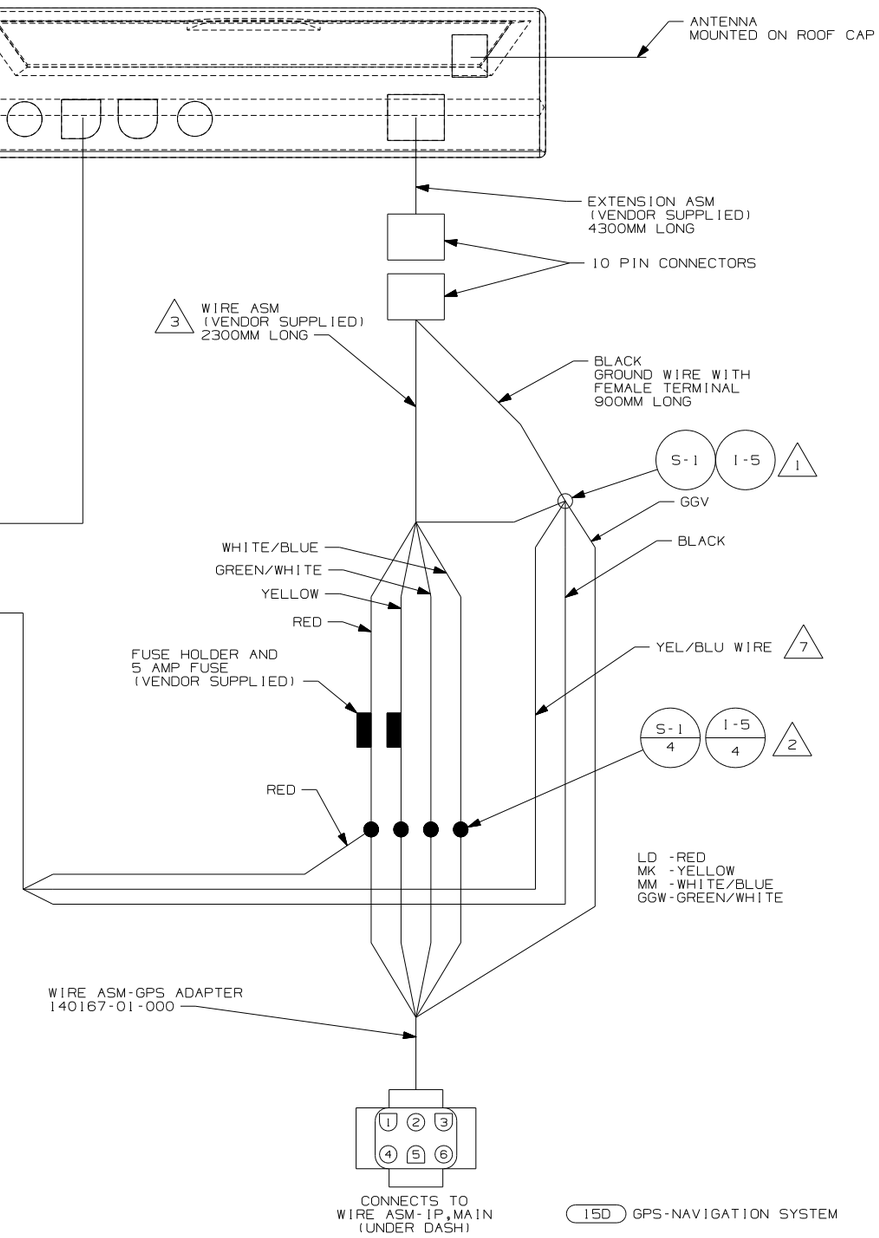

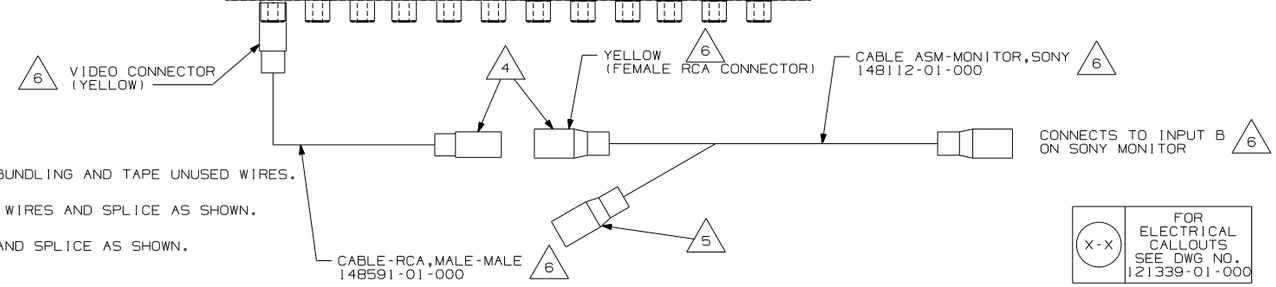

8 USED ON R,P,G & F SERIES

7 YEL/BLU WIRE IS SUPPLIED WITH MONITOR IN A SEPERATE BAG LABELED "REAR SEATE CONNECTOR" WITH A TERMINAL. INSERT TERMINAL INTO POSITION 1 OF ALPINE HOUSING & SPLICE TO GGV-GROUND WIRE. (NOTE: IT IS NOT THE SAME AS THE YEL/BLU FROM POSITION 7 IN ALPINE HOUSING.)

6 USED ON THE S SERIES ONLY.

5 WHITE CONNECTOR IS NOT USED. TAPE BACK INTO LOOM WITH TAPE 8363-01-000.

4 CONNECT TOGETHER

3 CUT WIRE ASM TO AVOID EXCESS WIRE BUNDLING AND TAPE UNUSED WIRES.

2 CUT TERMINALS FROM VENDOR SUPPLIED WIRES AND SPLICE AS SHOWN.

1 CUT RING TERMINAL FROM BLACK WIRE AND SPLICE AS SHOWN.

NOTES:

X-X FOR ELECTRICAL CALLOUTS SEE DWG NO. 121339-01-000

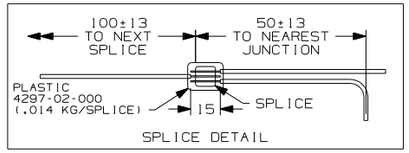

15D GPS-NAVIGATION SYSTEM

15D

FIRST USED 06 S-SER

DO NOT SCALE DRAWING

TITLE: WIRING INSTL-GPS

SHEET 5 PART NO 152094 REV

DWG NO	SHEET	DESCRIPTION
133004-01	1	2TK,DIG VOLT
133004-02	2	2T,DIG VOLT,SOLAR
133004-03	3	2TK, W/SOL & PAN
133004-04	4	2TK, W/O WAT HEAT
133004-05	5,6,7	2T,SOLAR/SENSOR

RELEASE	REV A	DATE	DWG NO 133004
REV	ZONE	REVISION RECORD	DATE / DFTR-ORIG

PIN #
1. 16 RED GENERATOR METER (+)
2. 16 YEL GENERATOR START
3. 16 GRN GENERATOR STOP
4. 16 BLK GENERATOR)-)

HOUSING-AMP
(UNIVERSAL MATE-N-LOK)
1-480702-0
CONTACT-PIN
350538-1

PIN #
1. 14 BLK (HOUSE +12VDC)
2. 14 (CHASSIS +12VDC)
3. 14 WHT (GROUND)
4. 20 RED (WATER TANK)
5. 20 BRN (BLACK TANK)
6. 20 GRY (GRAY TANK)
7. 12 RED/WHT (REMOTE WATER PUMP SWITCH)
8. 12 RED (WATER PUMP SWITCH)
9. 12 WHT/RED (REMOTE WATER PUMP)
10. BLANK
11. BLANK
12. 20 WHT/GRN (LP TANK SENSOR)
13. 16 YEL (WATER HEATER IGNITION)
14. BLANK
15. 20 WHT/BLU (WATER HEATER INDICATOR)

HOUSING-AMP
(UNIVERSAL MATE-N-LOK)
1-480710-0
CONTACT-PIN
350538-1

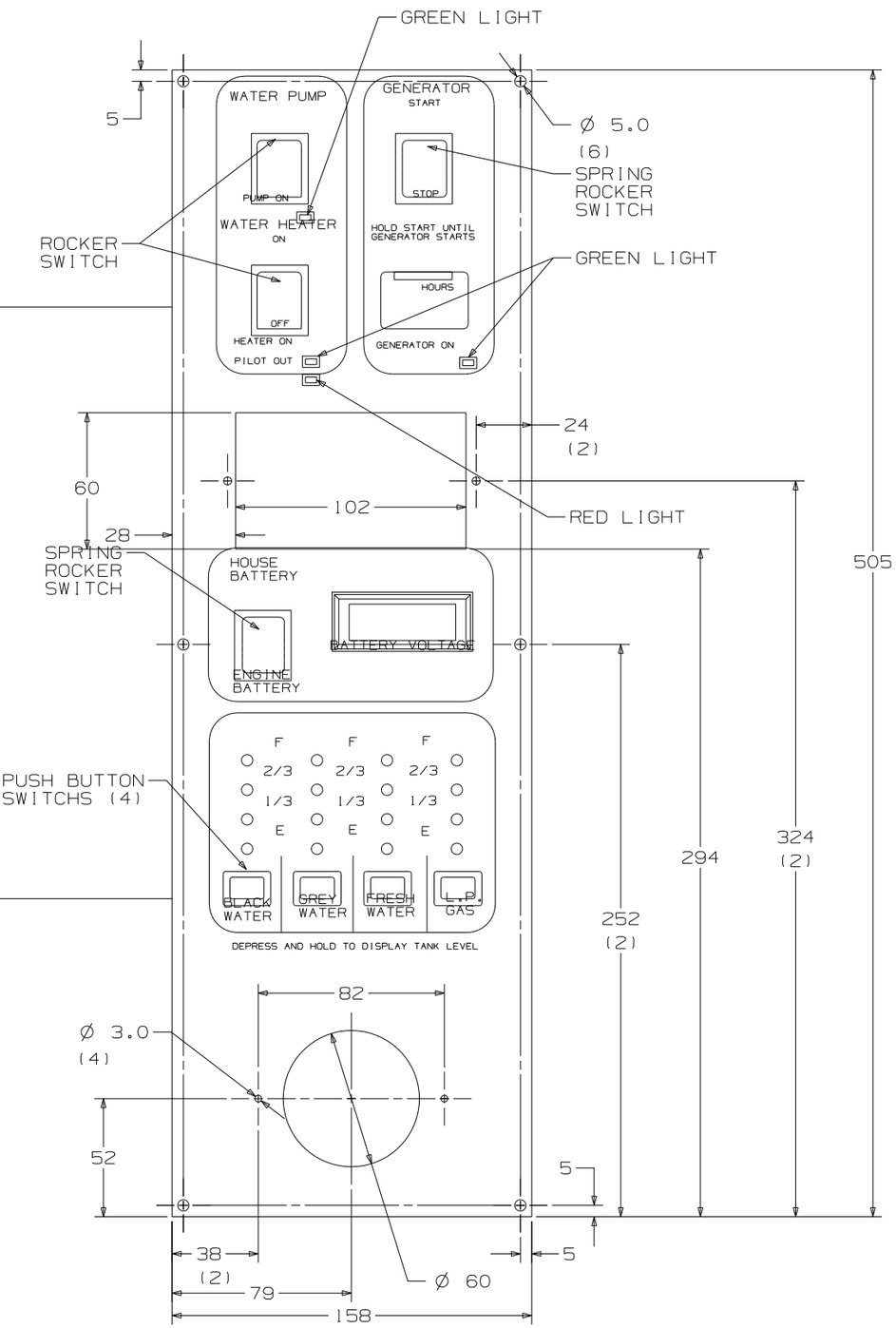

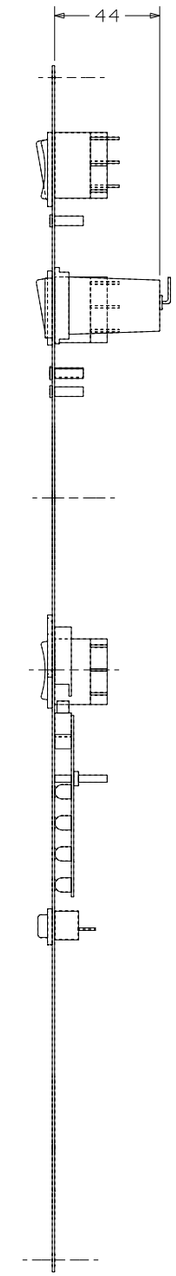

5. SWITCH RATING SHALL BE EMBOSSED ON THE SIDE OF THE 12V SWITCHES.
4. CUTOUT FOR PANEL TO BE 135 X 350 MIN/ 140 X 380 MAX.
3. LETTERS ON MAIN HEADING TO BE 5MM HIGH.
2. BLACK PANEL WITH WHITE GRAPHICS.
1. SUGGESTED VENDOR: VENLINE.

NOTES:

SEE CHART
FOR COLOR VARIATIONS OF THIS PART

WINNEBAGO INDUSTRIES

DFTR	ORIG. DATE
CHKR	ALL DIMENSIONS ARE IN MILLIMETERS
P.E.	
M.E.	FIRST USED
DSNR	STANDARDS

UNSPECIFIED TOLERANCES ARE:
WHOLE DIM (X) : 1
ONE-PLACE (X.X) :
TWO-PLACE (X.XX) :
ANGLE :

MATERIAL:

THIRD ANGLE PROJECTION

DO NOT SCALE DRAWING

TITLE: PANEL-MONITOR

SHEET 1 OF 7 | PART NO 133004

DWG NO 133004

PIN #
1. 16 RED GENERATOR METER (+)
2. 16 YEL GENERATOR START
3. 16 GRN GENERATOR STOP
4. 16 BLK GENERATOR)-)

HOUSING-AMP
(UNIVERSAL MATE-N-LOK)
1-480702-0
CONTACT-PIN
350538-1

PIN #
1. 14 BLK (HOUSE +12VDC)
2. 14 (CHASSIS +12VDC)
3. 14 WHT (GROUND)
4. 20 RED (WATER TANK)
5. 20 BRN (BLACK TANK)
6. 20 GRY (GRAY TANK)
7. 12 RED/WHT (REMOTE WATER PUMP SWITCH)
8. 12 RED (WATER PUMP SWITCH)
9. 12 WHT/RED (REMOTE WATER PUMP)
10. BLANK
11. BLANK
12. 20 WHT/GRN (LP TANK SENSOR)
13. 16 YEL (WATER HEATER IGNITION)
14. BLANK
15. 20 WHT/BLU (WATER HEATER INDICATOR)

HOUSING-AMP
(UNIVERSAL MATE-N-LOK)
1-480710-0
CONTACT-PIN
350538-1

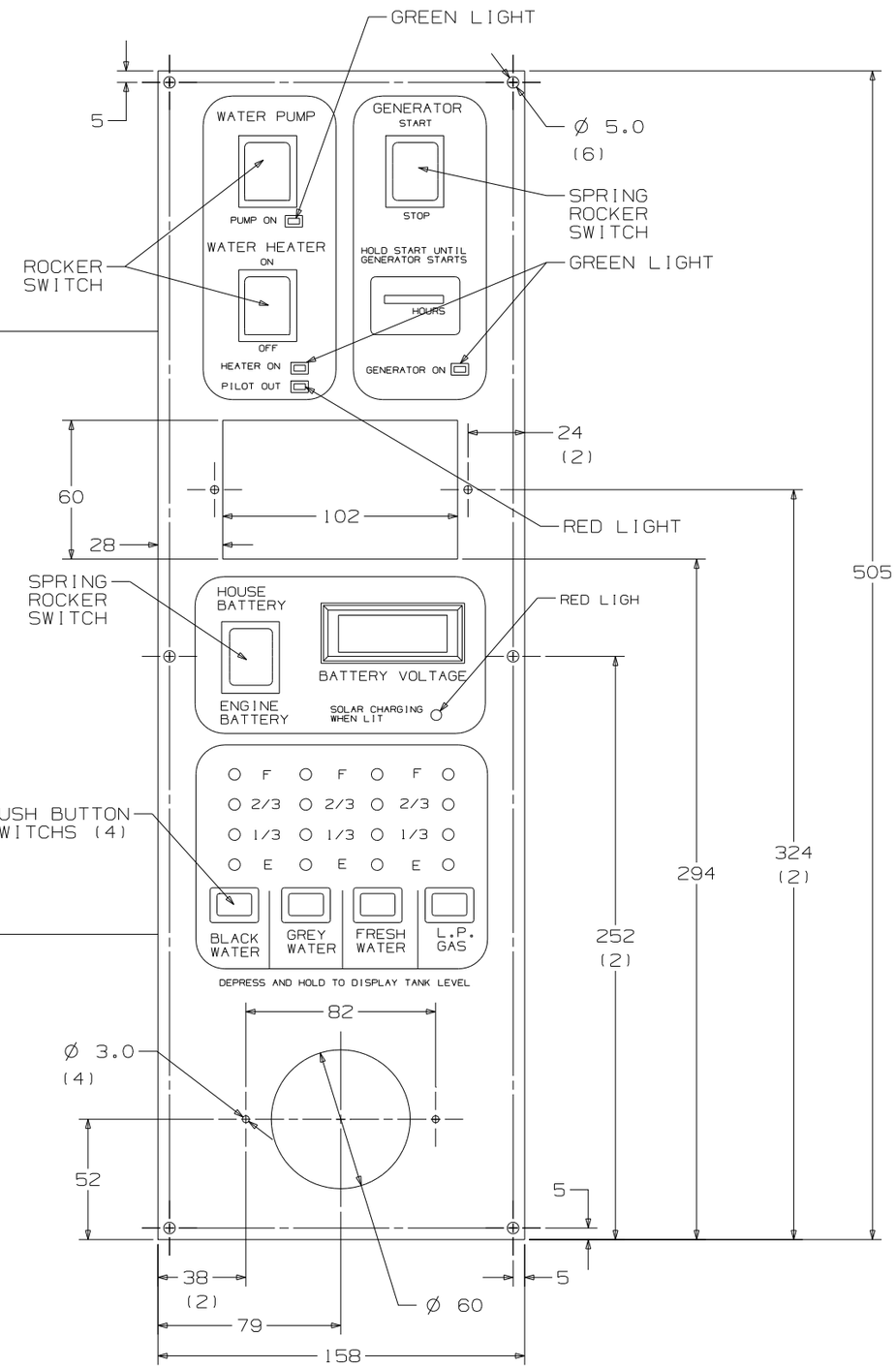

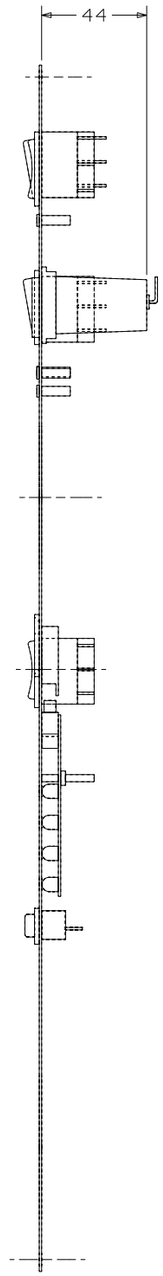

FIRST USED	STANDARDS
	DO NOT SCALE DRAWING
TITLE:	PANEL-MONITOR
SHEET 2	PART NO 133004

DWG NO 133004

PIN #
1. 16 RED GENERATOR METER (+)
2. 16 YEL GENERATOR START
3. 16 BRN GENERATOR STOP
4. 16 BLK GENERATOR (-)

HOUSING-AMP
(INIVERSAL MATE-N-LOK)
1-480702-0
CONTACT-PIN
350538-1

PIN #
1. 14 BLK (HOUSE +12VDC)
2. 14 (CHASSIS +12VDC)
3. 14 WHT (GROUND)
4. 20 RED (WATER TANK)
5. 20 BRN (BLACK TANK)
6. 20 GRY (GRAY TANK)
7. 12 RED/WHT (REMOTE WATER PUMP SWITCH)
8. 12 RED (WATER PUMP SWITCH
9. 12 WHT/RED (REMOTE WATER PUMP)
10. BLANK
11. BLANK
12. 20 WHT/GRN (LP TANK SENSOR)
13. 16 YEL (WATER HEATER IGNITION)
14. BLANK
15. 20 WHT/BLU (WATER HEATER INDICATOR)

HOUSING-AMP
(INIVERSAL MATE-N-LOK)
1-480710-0
CONTACT-PIN
350538-1

HOUSING-AMP
(UNIVERSAL-MATE-N-LOK)
1-480698-0
PIN
350538-0

PIN #
1. 16 BLK
2. 16 RED

HOUSING-AMP
(UNIVERSAL-MATE-N-LOK)
1-480699-0
PIN
350537-0

PIN #
1. 16 GRN
2. 16 RED

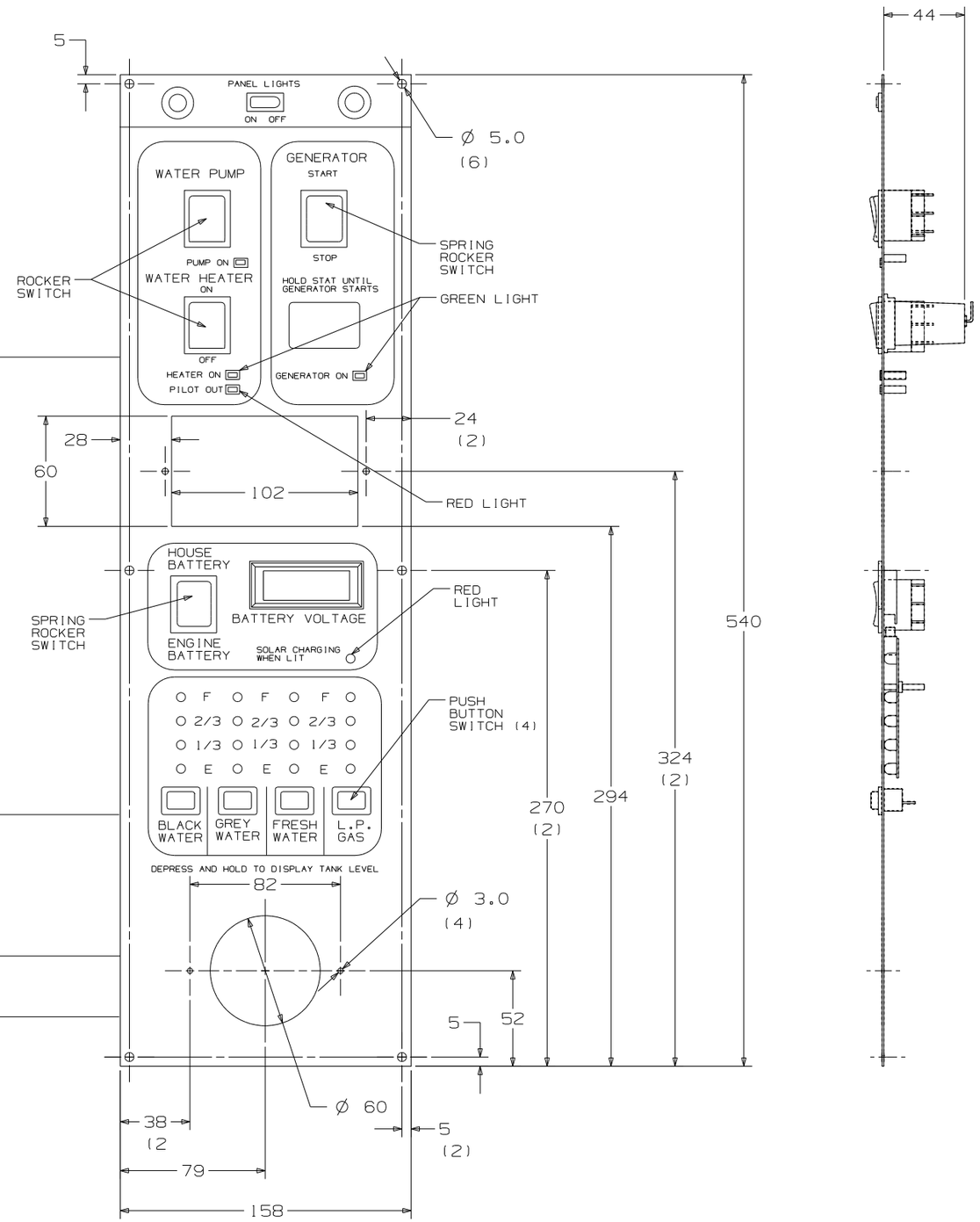

FIRST USED	STANDARD
	DO NOT SCALE DRAWING
TITLE:	PANEL-MONITOR
SHEET 3	PART NO 133004

DWG NO 133004

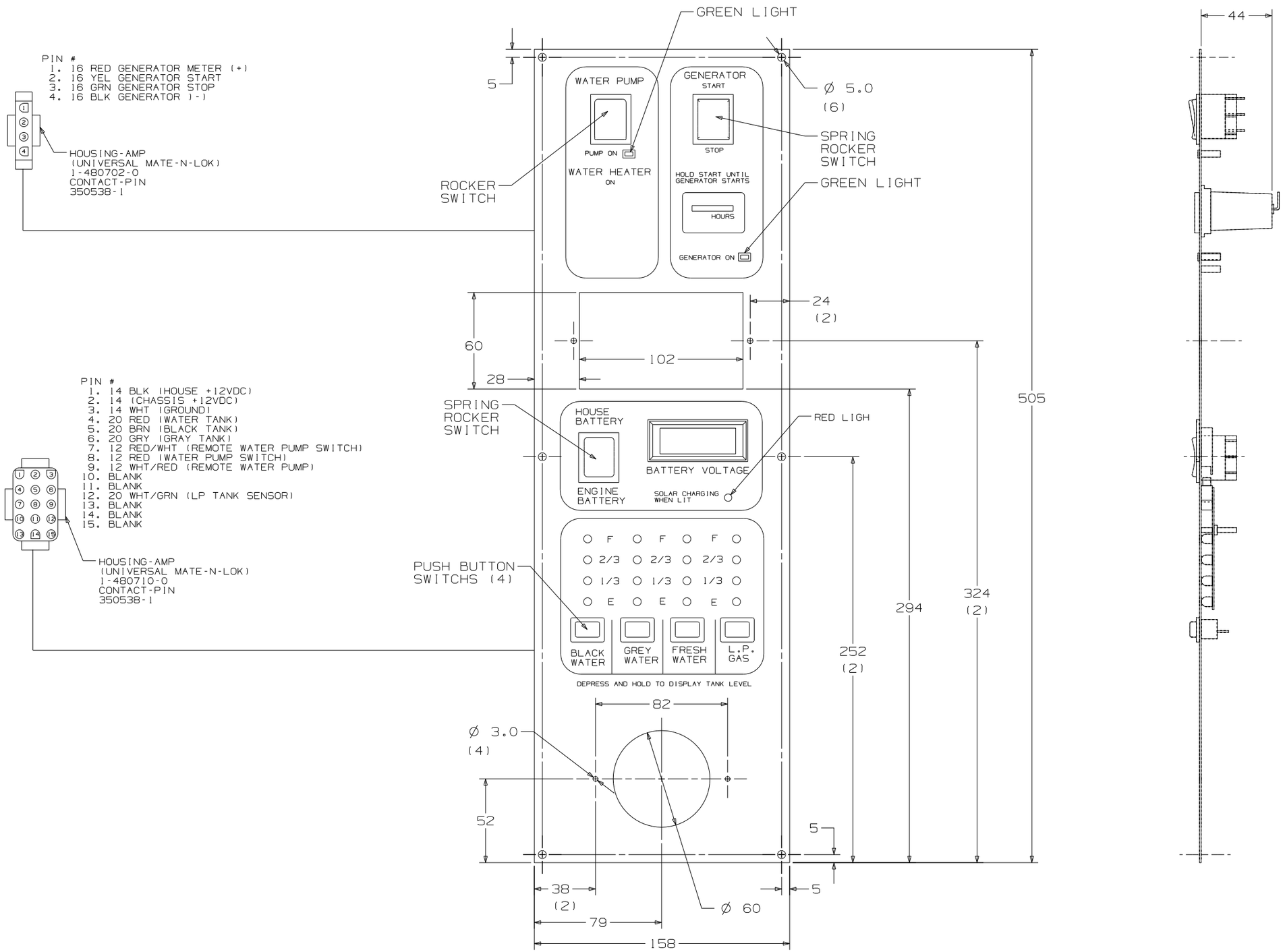

FIRST USED	STANDARDS
	DO NOT SCALE DRAWING
TITLE:	PANEL-MONITOR
SHEET 4	PART NO 133004

DWG NO 133004

LTR.	DESCRIPTION	DATE	DG. BY	CK. BY
LTR	DESCRIP ECN 16261	DATE	CHG BY	CKBY
A	SEE PAGE 3 ECN 16381	4-6-04	RJL	RJL
B	L5130-02 WAS L5113-04 ECN 16394	4-21-04	RJL	RJL

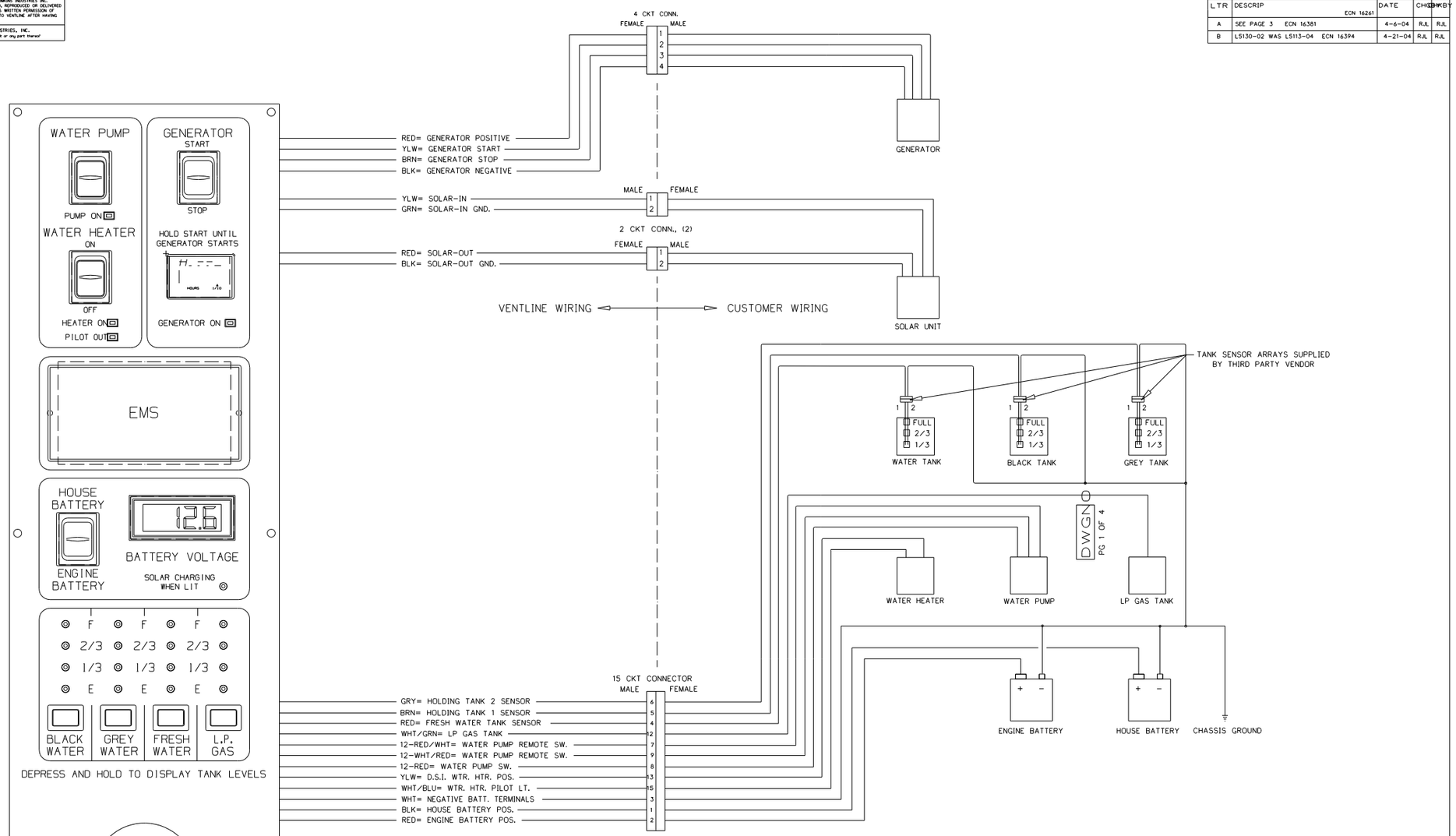

NOTES:

1. UNLESS OTHERWISE SPECIFIED ALL WIRE IS 22 AWG.
2. REF. DWG.'S:
   HARNESS, INTERNAL & SWITCH= L7785-01, -02
   HARNESS, GEN. INTERNAL & SWITCH= L7786-00
   HARNESS, SOLAR LIGHT= L7722-00
   PCB= L5130-02
   HARNESS, TEST= L8012-00
   TEST BOX= L8506-00
3. ALL PIGTAILS TO BE SUPPLIED BY CUSTOMER.
4. BEFORE PACKING, SECURE HARNESS WITH VD0169-00 TIE WRAP ON RIGHT SIDE POST.

PART NO.	REQ'D	MATERIAL	DESCRIPTION	DWG SIZE

BLANK SIZE BLANK WGT | USED ON USEDON

DRAWN DATE DRWNDATE | MATERIAL MATL MATL MATL | PHILIPS IND. INC. VENTLINE DIVISION BRISTOL, INDIANA 46507

CHECKED DATE | NAME DWGNAME DWGNAME DWGNAME | SCALE: SCALE

CHECKED DATE | DWG. NO. PG 1 OF 4 DWGNO

APPV'D DATE

ENGLISH (TOLERANCE UNLESS SPECIFIED) 0 PL.: .040 1 PL.: .020 2 PL.: .010 3 PL.: .005 FRACTIONS ±1/64

FIRST USED STANDARD

DO NOT SCALE DRAWING

TITLE: PANEL-MONITOR

SHEET 5 | PART NO 133004

DWG NO 133004

LTR.	DESCRIPTION	DATE	CHG. BY	CHK. BY
LTR	DESCRIP ECN 16261	DATE	CHGBY	CHKBY
A	ADDED LABEL DETAIL ECN 16381	4-6-04	RJL	RJL
B	L5130-02 WAS L5113-04 ECN 16394	4-21-04	RJL	RJL

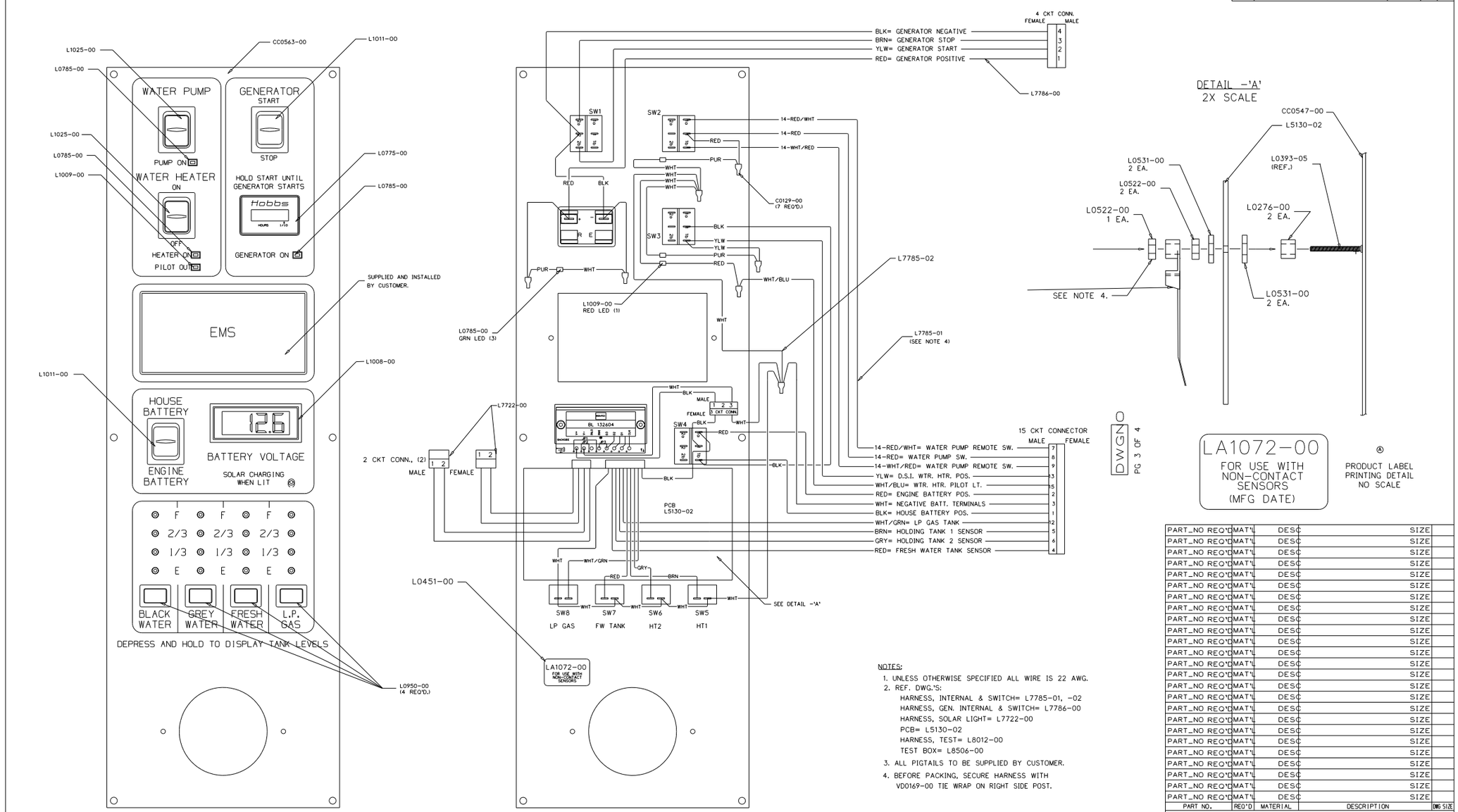

NOTES:

1. UNLESS OTHERWISE SPECIFIED ALL WIRE IS 22 AWG.
2. REF. DWG.'S:
   HARNESS, INTERNAL & SWITCH= L7785-01, -02
   HARNESS, GEN. INTERNAL & SWITCH= L7786-00
   HARNESS, SOLAR LIGHT= L7722-00
   PCB= L5130-02
   HARNESS, TEST= L8012-00
   TEST BOX= L8506-00
3. ALL PIGTAILS TO BE SUPPLIED BY CUSTOMER.
4. BEFORE PACKING, SECURE HARNESS WITH VD0169-00 TIE WRAP ON RIGHT SIDE POST.

PART NO.	REQ'D	MATERIAL	DESCRIPTION	DWG SIZE
PART_NO	REQ'D	MAT'L	DESC	SIZE
PART_NO	REQ'D	MAT'L	DESC	SIZE
PART_NO	REQ'D	MAT'L	DESC	SIZE
PART_NO	REQ'D	MAT'L	DESC	SIZE
PART_NO	REQ'D	MAT'L	DESC	SIZE
PART_NO	REQ'D	MAT'L	DESC	SIZE
PART_NO	REQ'D	MAT'L	DESC	SIZE
PART_NO	REQ'D	MAT'L	DESC	SIZE
PART_NO	REQ'D	MAT'L	DESC	SIZE
PART_NO	REQ'D	MAT'L	DESC	SIZE
PART_NO	REQ'D	MAT'L	DESC	SIZE
PART_NO	REQ'D	MAT'L	DESC	SIZE
PART_NO	REQ'D	MAT'L	DESC	SIZE
PART_NO	REQ'D	MAT'L	DESC	SIZE
PART_NO	REQ'D	MAT'L	DESC	SIZE
PART_NO	REQ'D	MAT'L	DESC	SIZE
PART_NO	REQ'D	MAT'L	DESC	SIZE
PART_NO	REQ'D	MAT'L	DESC	SIZE
PART_NO	REQ'D	MAT'L	DESC	SIZE
PART_NO	REQ'D	MAT'L	DESC	SIZE
PART_NO	REQ'D	MAT'L	DESC	SIZE
PART_NO	REQ'D	MAT'L	DESC	SIZE
PART_NO	REQ'D	MAT'L	DESC	SIZE
PART_NO	REQ'D	MAT'L	DESC	SIZE
PART_NO	REQ'D	MAT'L	DESC	SIZE

ENGLISH (TOLERANCE UNLESS SPECIFIED)
0 PL.± .040   1 PL.± .020
2 PL.± .010   3 PL.± .005
FRACTIONS ±1/64

BLANK SIZE BLANK WGT		USED ON USEDON	
DRAWN DATE DRWNDATE	MATERIAL MATL MATL MATL		PHILIPS IND. INC. VENTLINE DIVISION BRISTOL, INDIANA 46507
CHECKED DATE CHECKEDDATE	NAME DWGNAME DWGNAME DWGNAME		SCALE: SCALE
APPV'D DATE			DWG. NO. PG 3 OF 4 DWGNO

FIRST USED

STANDARD

DO NOT SCALE DRAWING

TITLE:
PANEL-MONITOR

SHEET 6

PART NO 133004

DWG NO 133004

LTR.	DESCRIPTION	DATE	DWN. BY	CHK. BY
LTR	DESCRIP ECN 16261	DATE	CHKD	CHKD BY
A	SEE PAGE 3 ECN 16381	4-6-04	RJL	RJL
B	L5130-02 WAS L5113-04 ECN 16394	4-21-04	RJL	RJL

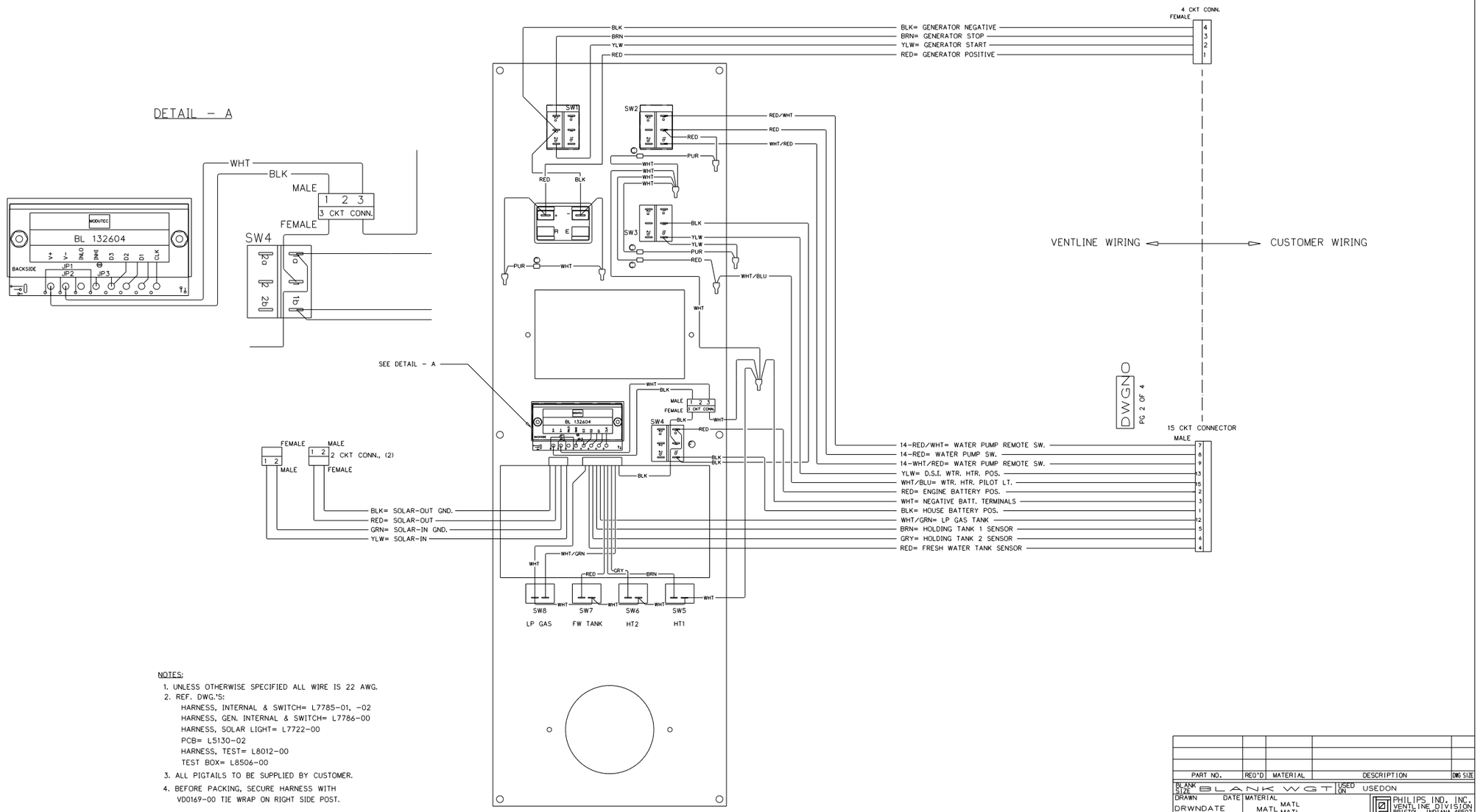

NOTES:

1. UNLESS OTHERWISE SPECIFIED ALL WIRE IS 22 AWG.
2. REF. DWG.'S:
   HARNESS, INTERNAL & SWITCH= L7785-01, -02
   HARNESS, GEN. INTERNAL & SWITCH= L7786-00
   HARNESS, SOLAR LIGHT= L7722-00
   PCB= L5130-02
   HARNESS, TEST= L8012-00
   TEST BOX= L8506-00
3. ALL PIGTAILS TO BE SUPPLIED BY CUSTOMER.
4. BEFORE PACKING, SECURE HARNESS WITH VD0169-00 TIE WRAP ON RIGHT SIDE POST.

PART NO.	REQ'D	MATERIAL	DESCRIPTION	DWG SIZE
BLANK SIZE BLANK WGT	USED ON	USEDON		
DRAWN DATE DRWNDATE	MATERIAL MATL MATL	MATL MATL	PHILIPS IND. INC. VENTLINE DIVISION BRISTOL, INDIANA 46507	
CHECKED DATE CHECKEDDATE	NAME DWGNAME DWGNAME		SCALE: SCALE	
APPV'D DATE			DWG. NO. PG 2 OF 4 DWGNO	

ENGLISH (TOLERANCE UNLESS SPECIFIED)
0 PL.: ±.040 1 PL.: ±.020
2 PL.: ±.010 3 PL.: ±.005
FRACTIONS ±1/64

FIRST USED
STANDARD

DO NOT SCALE DRAWING

TITLE:
PANEL-MONITOR

SHEET 7 PART NO 133004

RELEASE	REV A	DATE	DWG NO 152594

REV	ZONE	REVISION RECORD	DATE	DFTR-ORIG

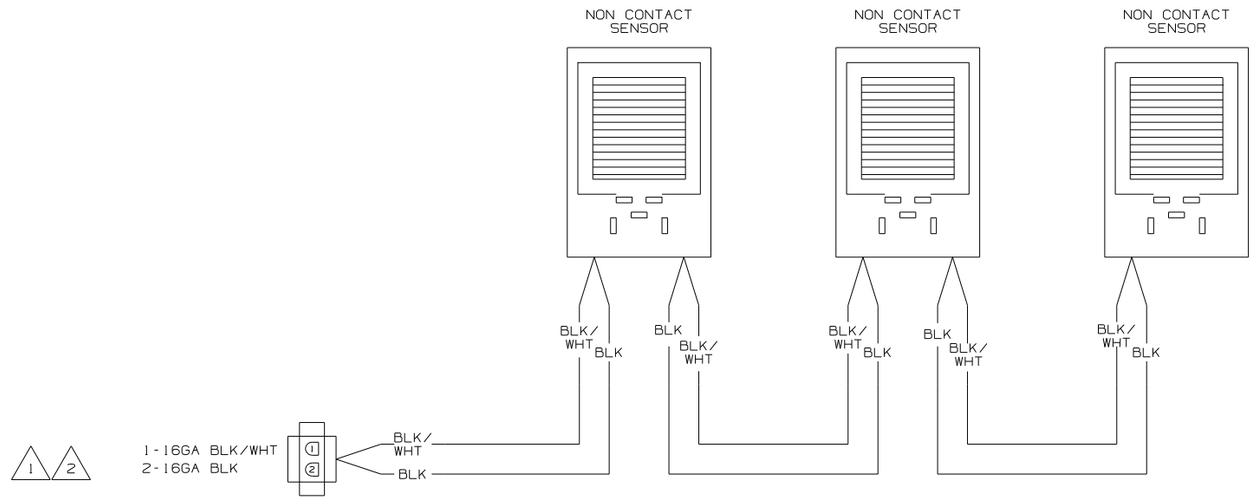

WIRING DIAGRAM-TANK,WATER
OR
WIRING DIAGRAM-TANK,MAIN
(WIRE ASM-151316 REV A)

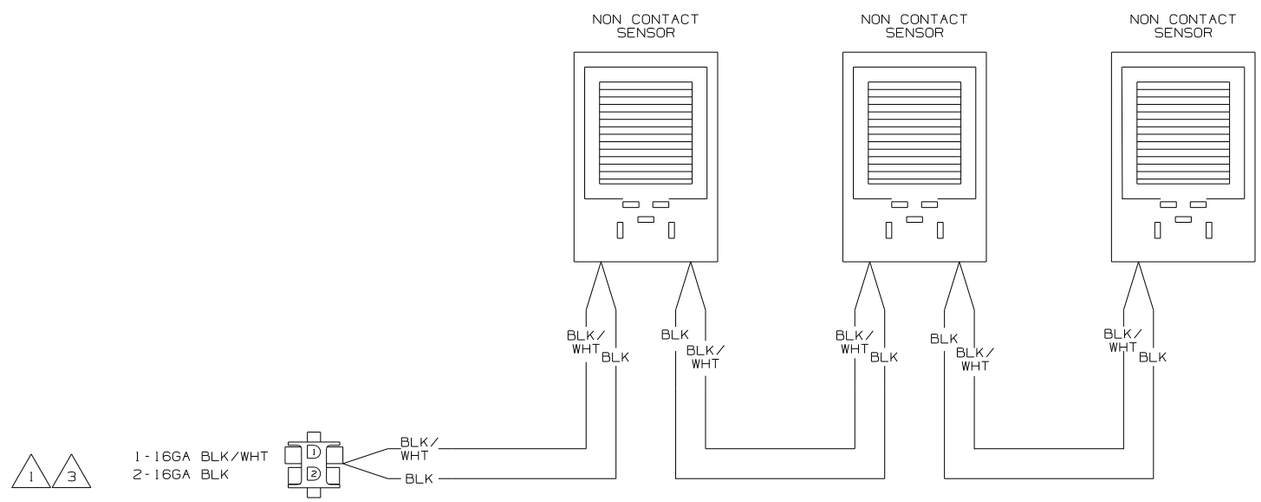

WIRING DIAGRAM-AUX HOLDING
(WIRE ASM-151317 REV A)

3. IF TWO MONITOR PANELS ARE UTILIZED THIS WIRE ASM CONNECTS TO WIRE ASM-TANK,DIODE PACK 151808-01 SHT2.

2. IF TWO MONITOR PANELS ARE UTILIZED THIS WIRE ASM CONNECTS TO WIRE ASM-TANK,DIODE PACK 151808-02 SHT2.

1. IF ONLY ONE MONITOR PANEL IS USED SEE WIRING DIAGRAM-BODY FOR ADDITIONAL INFORMATION.

NOTES:

DFTR	ORIG. DATE
CHKR	ALL DIMENSIONS ARE IN MILLIMETERS
P.E.	
M.E.	FIRST USED
DSNR	05 MOTOR HOMES

UNSPECIFIED TOLERANCES ARE:
WHOLE DIM (X) :
ONE-PLACE (X.X) :
TWO-PLACE (X.XX) :
ANGLE :

MATERIAL:

THIRD ANGLE PROJECTION

DO NOT SCALE DRAWING

TITLE:
WIRING DIAGRAM-HOLDING TANKS

SHEET 1 OF 2 | PART NO 152594

DWG NO 152594

WIRE ASM-COACH

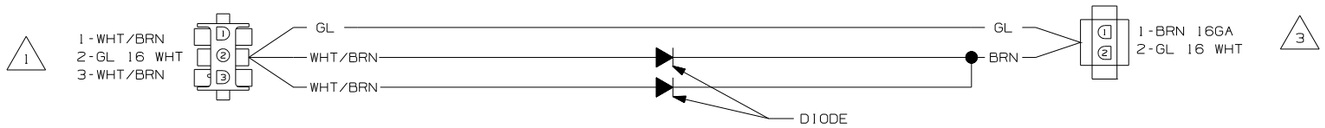

WIRING DIAGRAM-TANK,DIODE PACK
151808-01-000 REV A

WIRE ASM-COACH

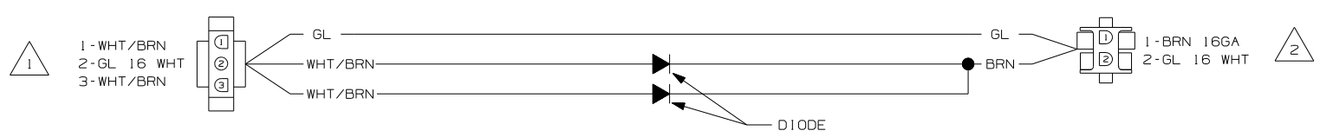

WIRING DIAGRAM-TANK,DIODE PACK
151808-02-000 REV A

NOTES:

3 CONNECT TO WIRE ASM-TANK,AUX. SEE SHT 1.

2 CONNECT WIRE ASM-TANK,WATER OR MAIN. SEE SHT 1.

1 SEE WIRING DIAGRAM-BODY FOR ADDIDTIONAL INFORMATION.

FIRST USED 05 MOTOR HOMES	
DO NOT SCALE DRAWING	
TITLE: WIRING DIAGRAM-HOLDING TANKS	
SHEET 2	PART NO 152594

DRAWING NO.	SHEET	SERIES
153806-01	1	P
153806-02	2	R,S

RELEASE	REV A	DATE	DWG NO 153806

REV	ZONE	REVISION RECORD	DATE	DFTR-ORIG

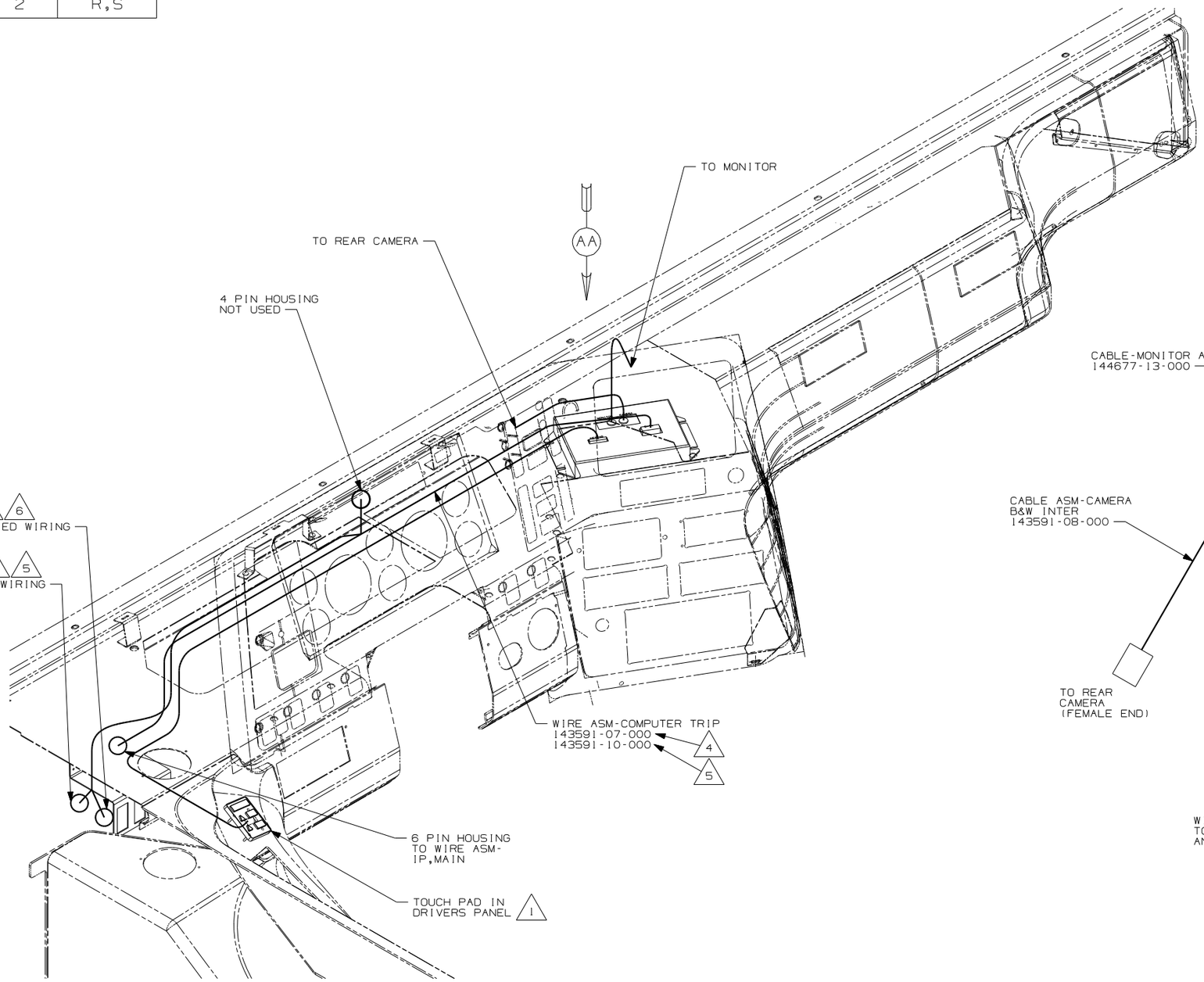

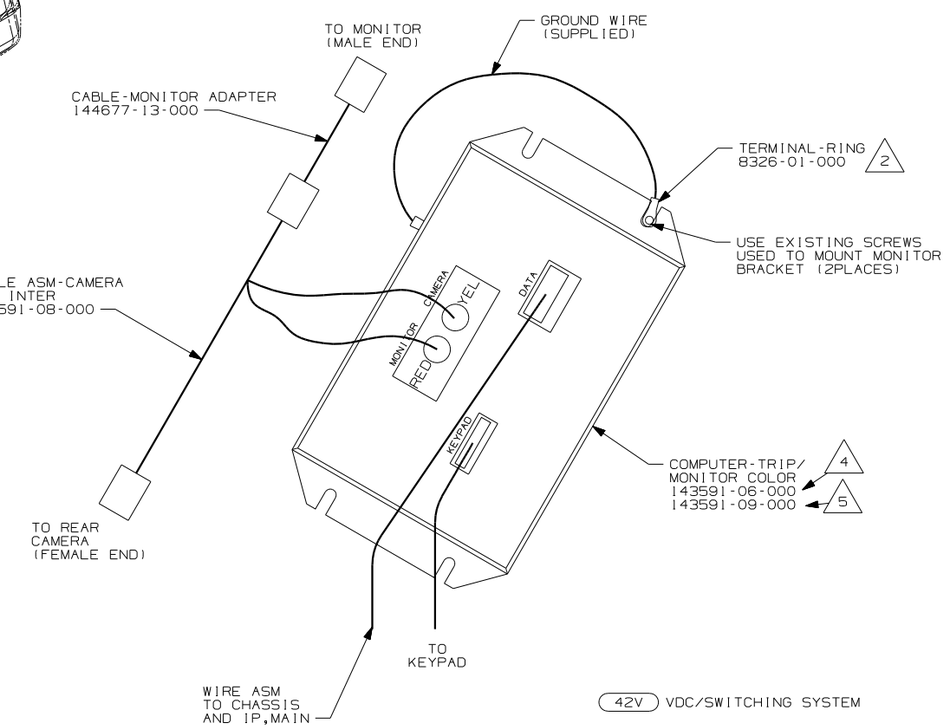

VIEW AA

42V VDC/SWITCHING SYSTEM

NOTES:

5 USED WITH GEN 4 TRANSMISSION. CHASSIS PART NUMBERS ENDING WITH -341 OR -342.

4 USED WITH PRE-GEN 4 TRANSMISSION. CHASSIS PART NUMBERS ENDING WITH -311 OR -312.

3 CONNECT TRIP TEK 2 PIN HOUSING TO MATING FREIGHTLINER 2 PIN HOUSING W/GREEN AND ORANGE TWISTED PAIR WIRES.

2 ADD RING TERMINAL TO EXISTING GROUND AND MOUNT UNDER COMPUTER MOUNTING SCREW.

1 USE VENDER SUPPLIED NUTS.

6 CONNECT TRIP TEK 2 PIN HOUSING TO MATING FREIGHTLINER 2 PIN HOUSING W/YELLOW AND DARK GREEN TWISTED PAIR WIRES.

42V

WINNEBAGO

DFTR	ORIG. DATE
CHKR	ALL DIMENSIONS ARE IN MILLIMETERS
P.E.	
M.E.	FIRST USED
DSNR	06 MOTORHOMES

UNSPECIFIED TOLERANCES ARE:

WHOLE DIM (X)	:	
ONE-PLACE (X.X)	:	1.0
TWO-PLACE (X.XX)	:	0.50
ANGLE	:	

THIRD ANGLE PROJECTION

MATERIAL:

DO NOT SCALE DRAWING

TITLE:
WIRING INSTL-TRIP COMPUTER

SHEET 1 OF 2 | PART NO 153806

REF: 1

DWG NO 153806

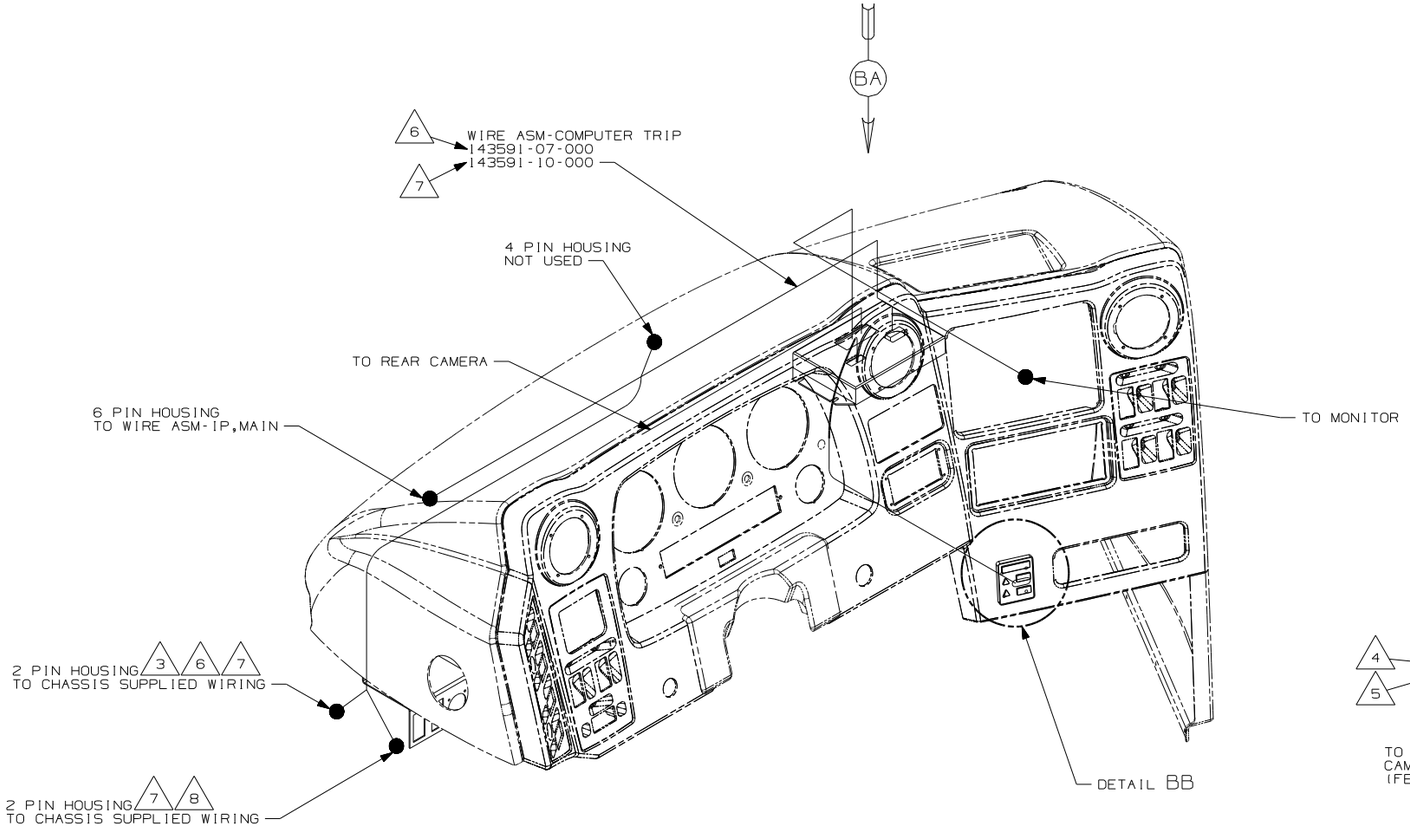

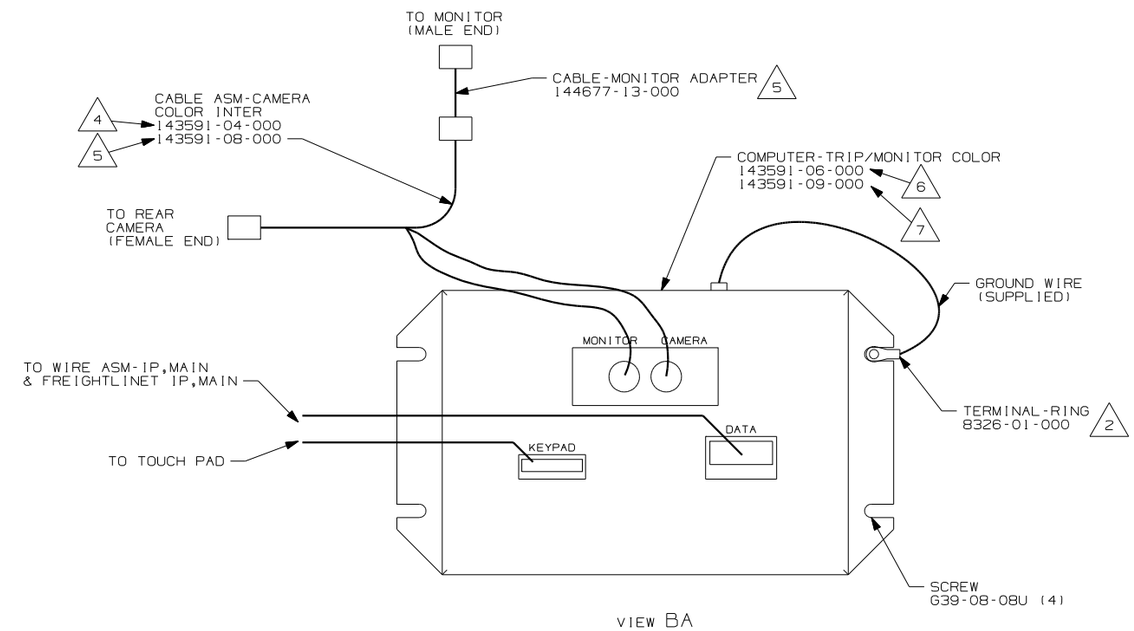

VIEW BA

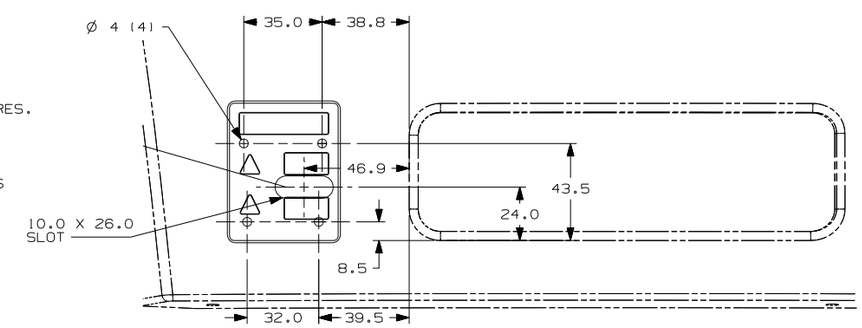

DETAIL BB 1

NOTES:

8. CONNECT TRIP TEK 2 PIN HOUSING TO MATING FREIGHTLINER 2 PIN HOUSING W/YELLOW AND DARK GREEN TWISTED PAIR WIRES.
7. USED WITH GEN 4 TRANSMISSION. CHASSIS PART NUMBERS ENDING WITH -341 OR -342.
6. USED WITH PRE-GEN 4 TRANSMISSION. CHASSIS PART NUMBERS ENDING WITH -311 OR -312.
5. FOR USE ON R-SERIES ONLY.
4. FOR USE ON S-SERIES ONLY.
3. CONNECT TRIP TEK 2 PIN HOUSING TO MATING FREIGHTLINER 2 PIN HOUSING W/GREEN AND ORANGE TWISTED PAIR WIRES.
2. ADD RING TERMINAL TO EXISTING GROUND AND MOUNT UNDER COMPUTER MOUNTING SCREW.
1. USE VENDOR SUPPLIED NUTS.

42V VCR/SWITCHING SYSTEM

42V

FIRST USED 06 MOTORHOMES

DO NOT SCALE DRAWING

TITLE: WIRING INSTL-TRIP COMPUTER

SHEET 2 PART NO 153806

RELEASE	REV A	DATE	DWG NO 110138
REV	ZONE	REVISION RECORD	DATE / DFTR-ORIG

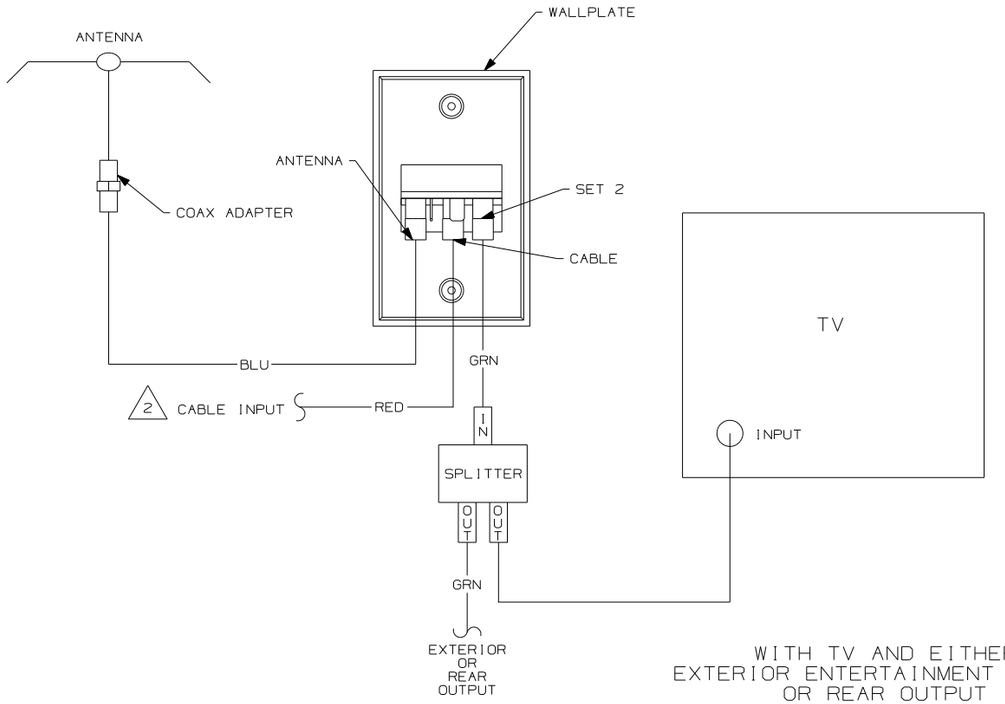

WITH TV AND EITHER EXTERIOR ENTERTAINMENT CENTER OR REAR OUTPUT

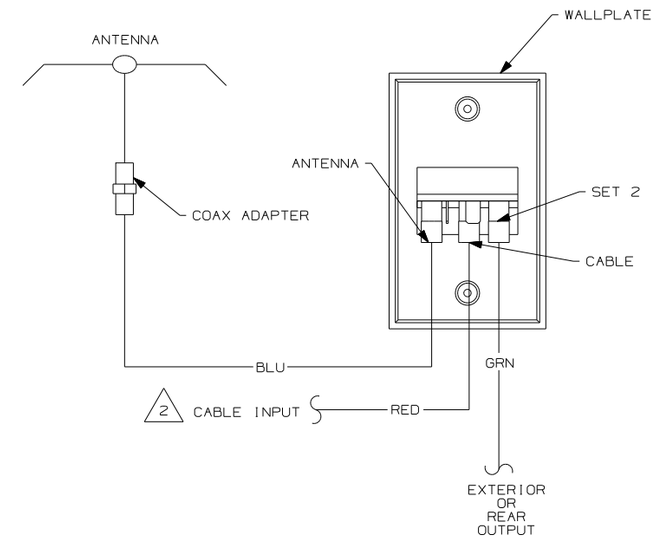

WITH EITHER EXTERIOR ENTERTAINMENT CENTER OR REAR OUTPUT

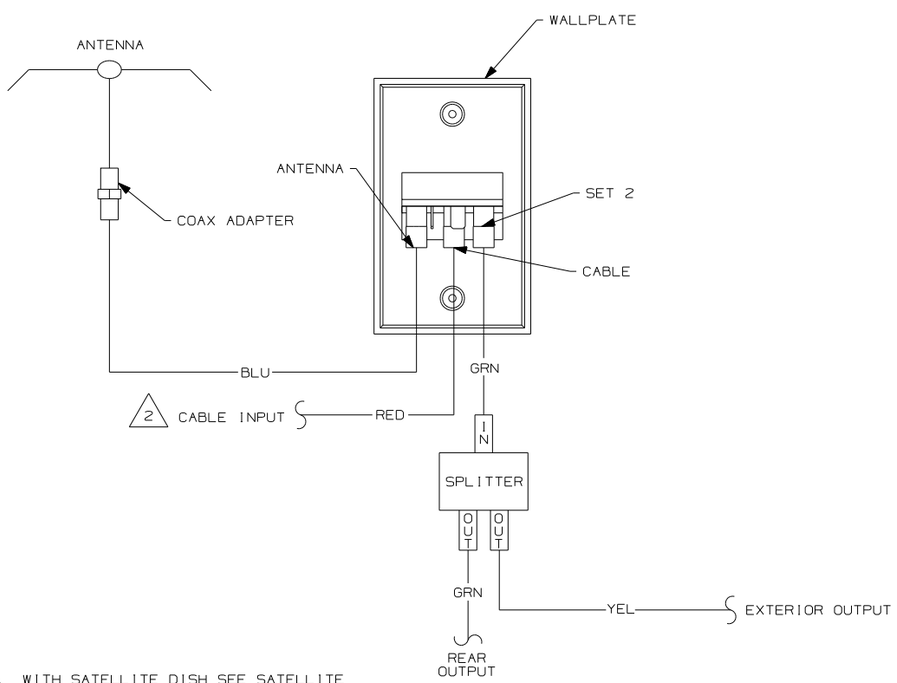

WITH EXTERIOR ENTERTAINMENT CENTER AND REAR OUTPUT

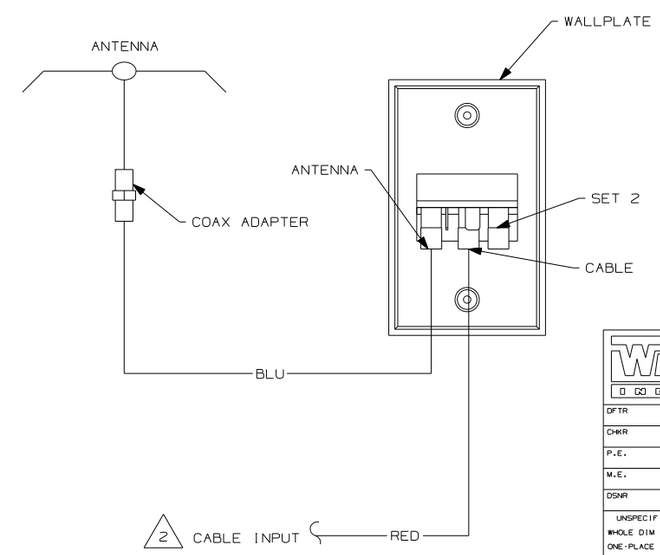

WITHOUT EITHER EXTERIOR ENTERTAINMENT CENTER OR REAR OUTPUT

2 WITH SATELLITE DISH SEE SATELLITE DISH VIEW SHT 2 BOTTOM LEFT.

1 COLOR INDICATES IDENTIFICATION TAPE.

NOTES:

DFTR	ORIG. DATE
CHKR	ALL DIMENSIONS ARE IN MILLIMETERS
P.E.	
M.E.	FIRST USED
DSNR	93 MOTORHAMES

UNSPECIFIED TOLERANCES ARE:
WHOLE DIM (X) :
ONE-PLACE (X.X) :
TWO-PLACE (X.XX) :
ANGLE :

MATERIAL:

THIRD ANGLE PROJECTION

DO NOT SCALE DRAWING

TITLE: WIRING DIAGRAM-TV COAX

SHEET 1 OF 2 | PART NO 110138

DWG NO 110138

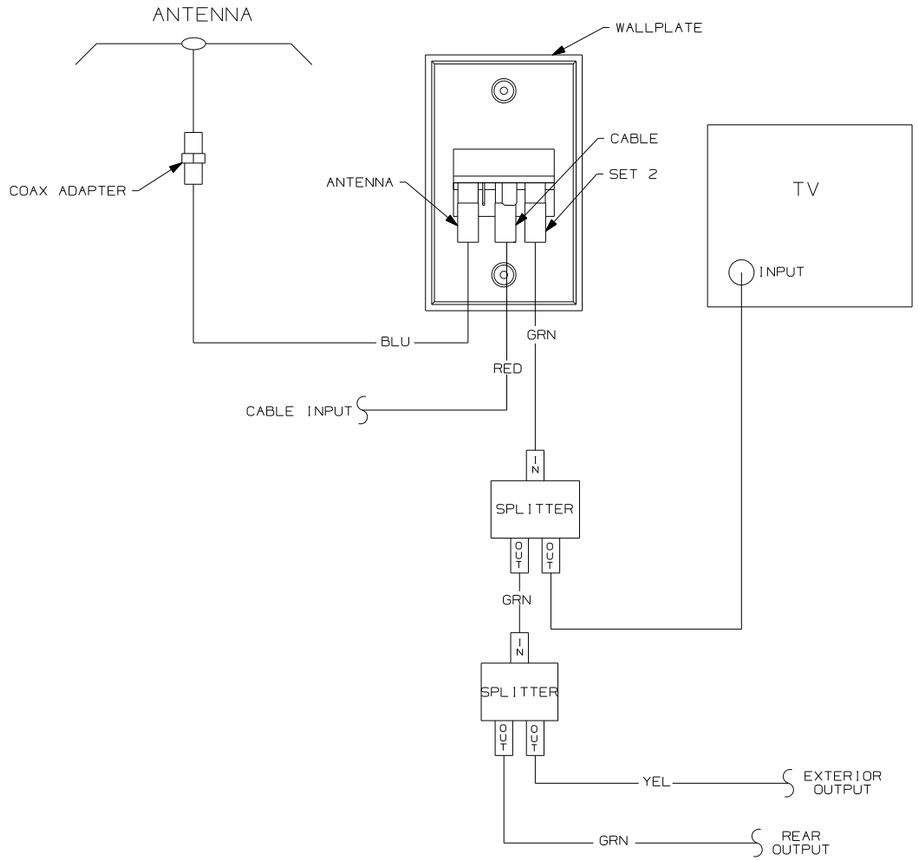

WITH TV,
EXTERIOR ENTERTAINMENT CENTER
AND REAR OUTPUT

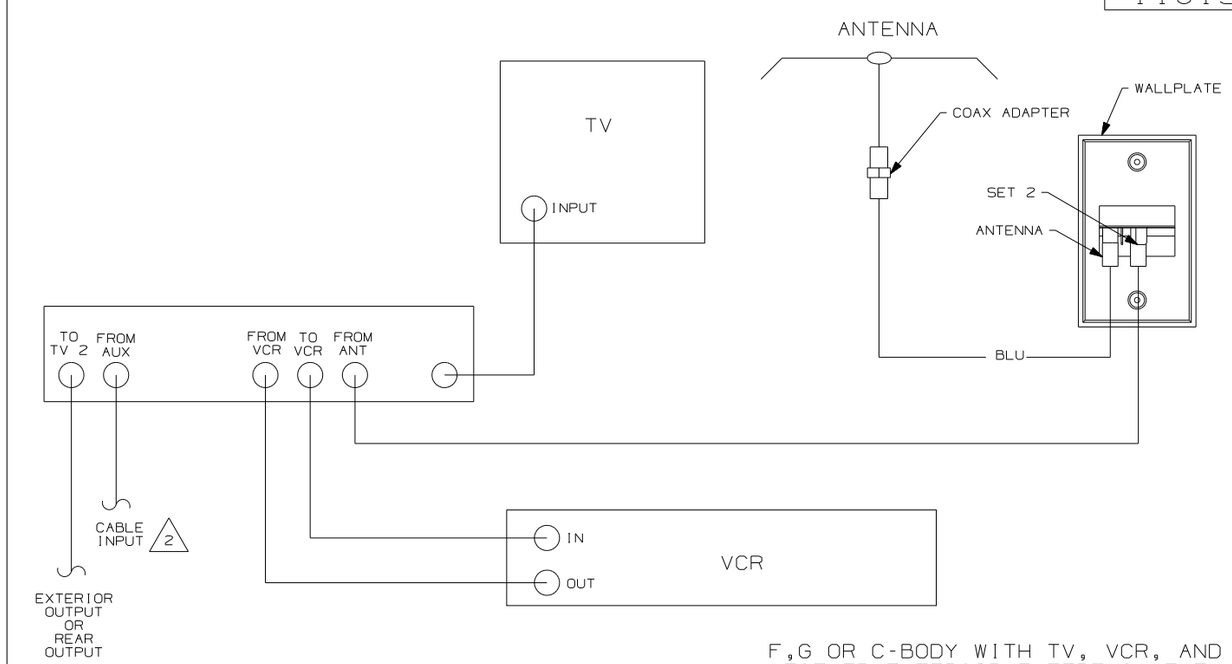

F,G OR C-BODY WITH TV, VCR, AND
EITHER EXTERIOR ENTERTAINMENT
CENTER OR REAR OUTPUT

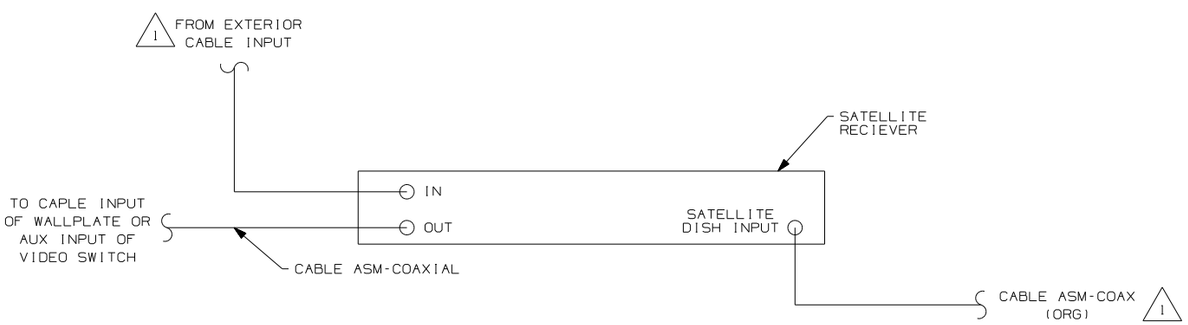

2 WITH SATELLITE DISH SEE SATELLITE DISH VIEW BOTTOM LEFT.

1 CONNECT TV COAX TO JACK ON FRONT OF WALLPLATE.

NOTES:

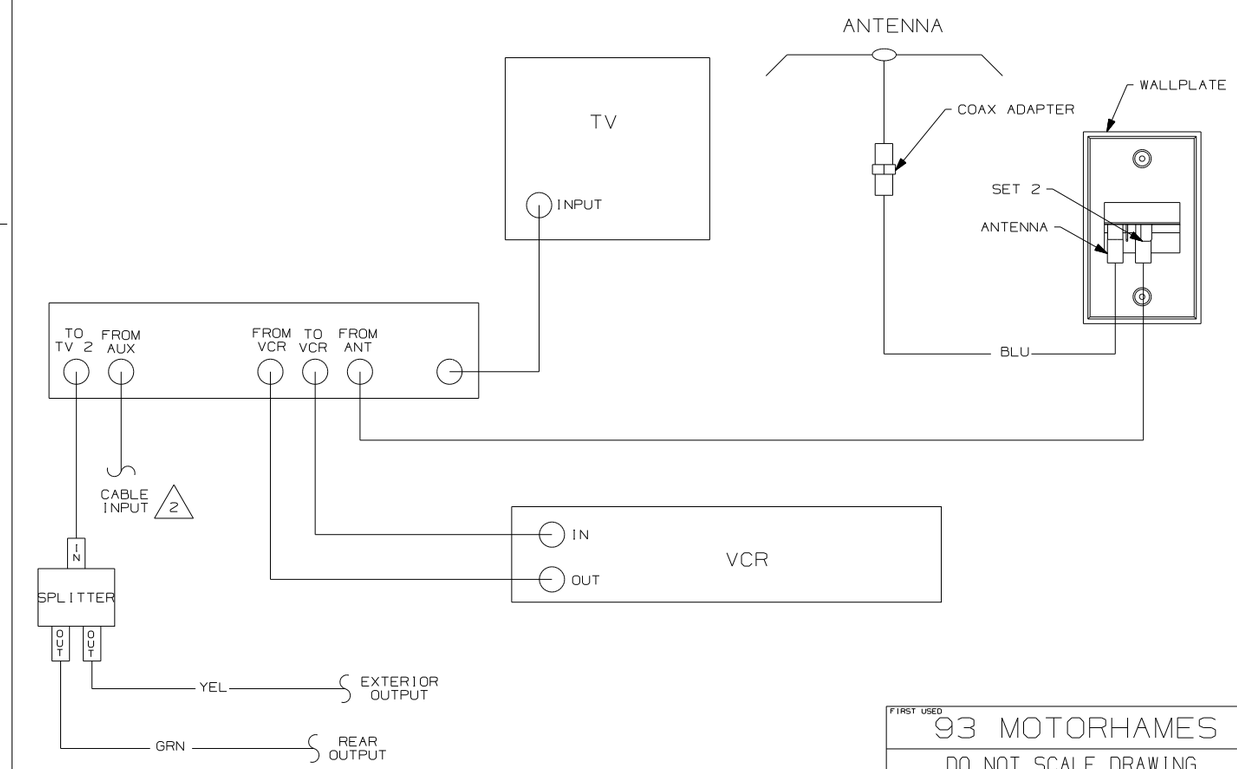

N,M OR P-SERIES WITH TV AND VCR OR
F,G OR C-BODY WITH TV, VCR, EXTERIOR
ENTERTAINMENT CENTER AND REAR OUTPUT

FIRST USED	93 MOTORHAMES
	DO NOT SCALE DRAWING
TITLE:	WIRING DIAGRAM-TV COAX
SHEET 2	PART NO 110138

DRAWING NO.	SHEET	UNIT
152124-01	1,7	D
152124-02	2,8	F
152124-03	3,8	G
152124-04	4,8	P
152124-05	5,8	R
152124-06	6,8,9	S

RELEASE	REV A	DATE	DWG NO 152124

REV	ZONE	REVISION RECORD	DATE	DFTR-ORIG

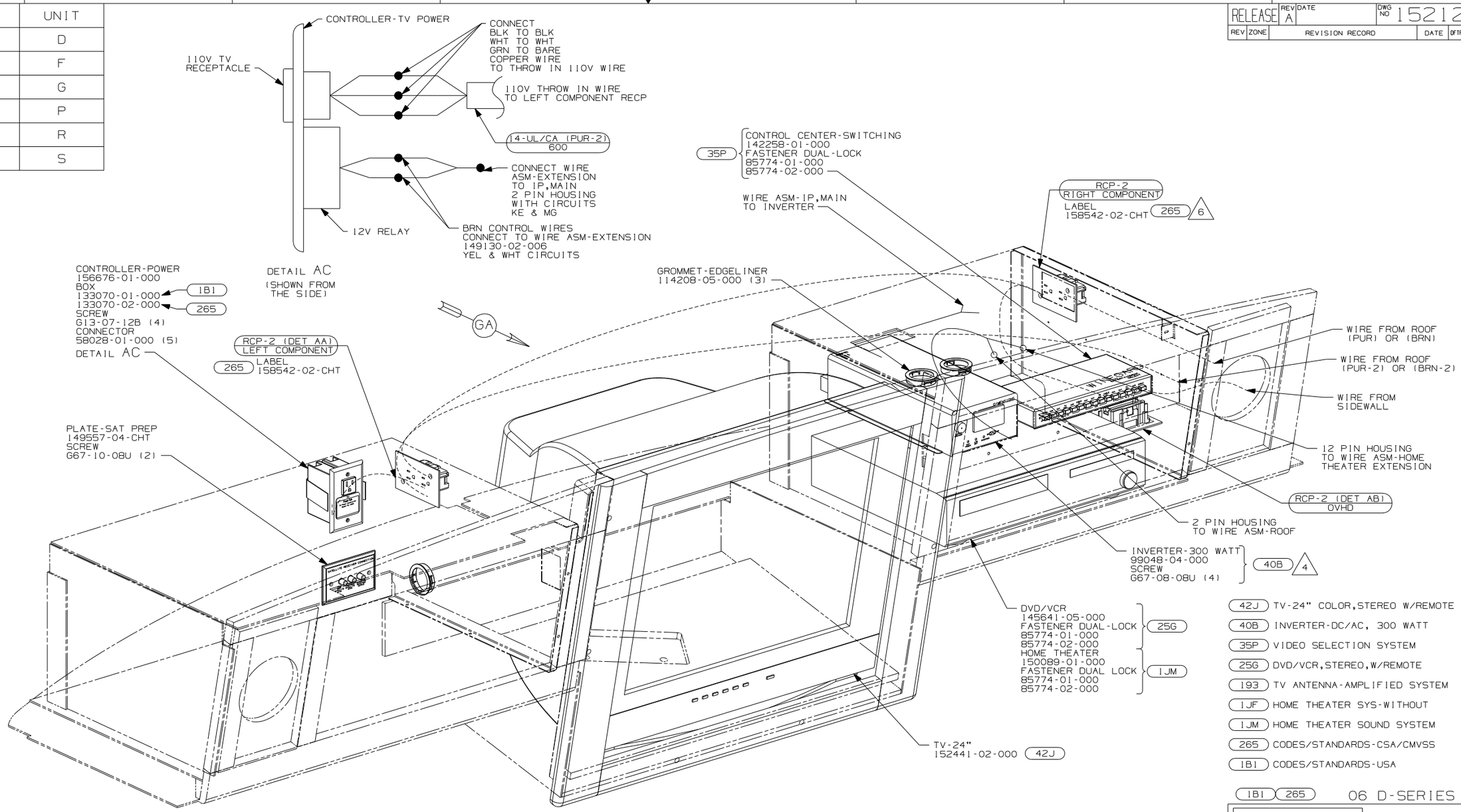

42J TV-24" COLOR,STEREO W/REMOTE
40B INVERTER-DC/AC, 300 WATT
35P VIDEO SELECTION SYSTEM
25G DVD/VCR,STEREO,W/REMOTE
193 TV ANTENNA-AMPLIFIED SYSTEM
1JF HOME THEATER SYS-WITHOUT
1JM HOME THEATER SOUND SYSTEM
265 CODES/STANDARDS-CSA/CMVSS
1B1 CODES/STANDARDS-USA

1B1 265 06 D-SERIES

6 WITH 1JF AND WITHOUT 25G

5 CONNECT PURPLE-2/BROWN-2 TO INVERTER WITH FEATURE 40B

4 WHEN THE INVERTER IS USED IN CONJUNCTION WITH VINYL COVERED PANEL REMOVE FABRIC FROM HOLES SUPPLIED IN DIELECTRIC PANEL FOR VENTILATION.

3. WHERE WIRES PASS THROUGH HOLES IN STEEL AND NOT OTHERWISE PROTECTED, USE GROMMET 92908-02-000.

2. ALL WIRES TO BE SECURED WITH CLAMP 10495-01-000 OR CLIP 80734-01-000 EVERY 600MM. USE SCREW G67-10-12B UNLESS OTHERWISE SPECIFIED.

1. 110V WIRE TO BE CLAMPED WITH CLAMP 10497-05-000 WITHIN 200MM OF OUTLET BOXES, USE SCREW G67-10-12B.

NOTES:

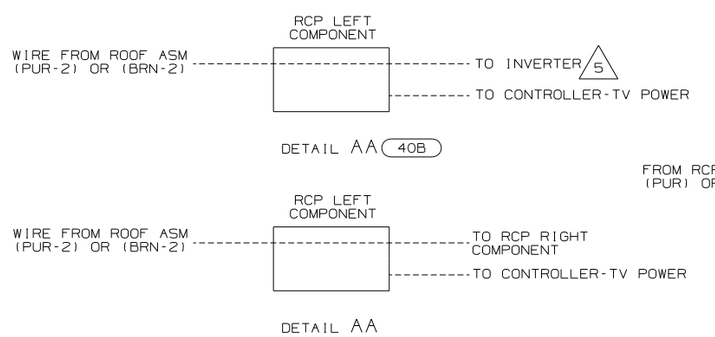

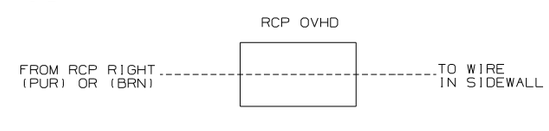

WINNEBAGO INDUSTRIES

DFTR	ORIG. DATE
CHKR	ALL DIMENSIONS ARE IN MILLIMETERS
P.E.	
M.E.	FIRST USED 06 A-BODIES
DSNR	

UNSPECIFIED TOLERANCES ARE:
WHOLE DIM (X) :
ONE-PLACE (X.X) :
TWO-PLACE (X.XX) :
ANGLE :
THIRD ANGLE PROJECTION

MATERIAL:

DO NOT SCALE DRAWING

TITLE: WIRING INSTL-TV/DVD,FRONT

SHEET 1 OF 9 | PART NO 152124 | REV

REF: 1 6/15/2006

DWG NO 152124

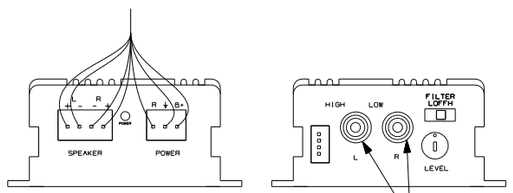

DETAIL BD

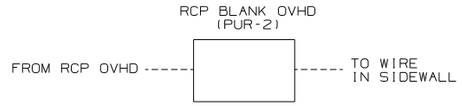

DETAIL BA

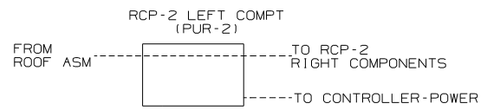

DETAIL BF

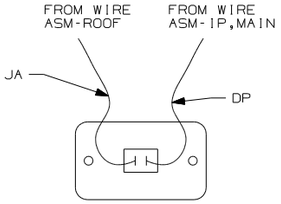

DETAIL BE

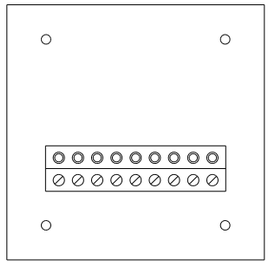

DETAIL BF
(REAR VIEW) 78K 6

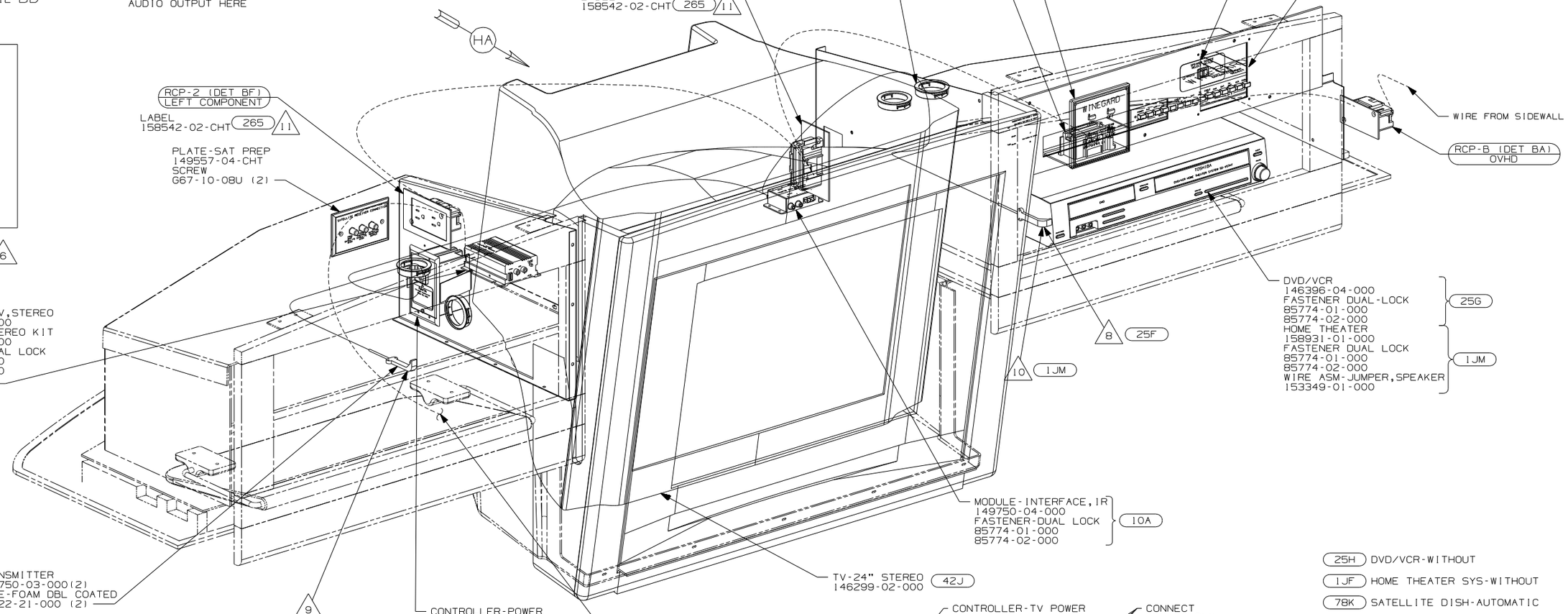

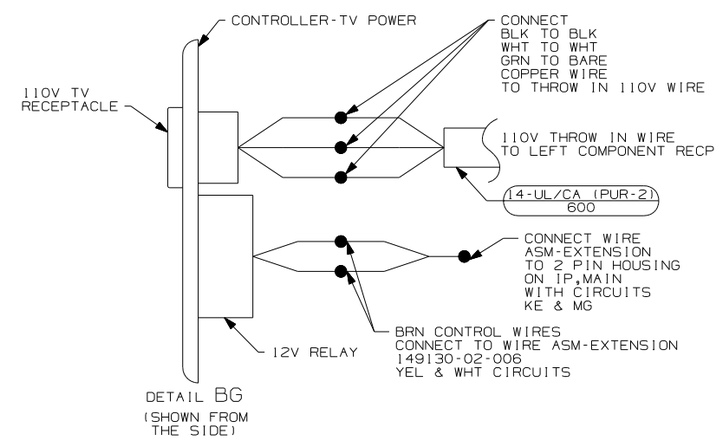

DETAIL BG
(SHOWN FROM
THE SIDE)

NOTES:

1. 110V WIRE TO BE CLAMPED WITH CLAMP 10497-05-000 WITHIN 200MM OF OUTLET BOXES, USE SCREW G67-10-12B.
2. ALL WIRES TO BE SECURED WITH CLAMP 10495-01-000 OR CLIP 80734-01-000 EVERY 600MM. USE SCREW G67-10-12B UNLESS OTHERWISE SPECIFIED.
3. WHERE WIRES PASS THROUGH HOLES IN STEEL AND NOT OTHERWISE PROTECTED, USE GROMMET 92908-02-000.

4 SWITCH SUPPLIED WITH SATELLITE DISH. SEE WIRING INSTL-BODY,12V FOR ADDITIONAL INFORMATION.

5 FOR USE WITH SHELLS ONLY.

6 REMOVE VINYL FROM CUTOUT AT INSTALLATION.

7 WITHOUT 25G

8 POSITION TRANSMITTER UNDERNEATH DVD/VCR 260MM FROM LEFT SIDE OF DVD/VCR.

9 POSITION TRANSMITTER IN THE MIDDLE OF THE TOP SHELF,TOWARD OUTER EDGE OF SHELF.

10 POSITION TRANSMITTER ON THE FRONT LEFT SIDE OF THE DVD/VCR USING TIE-MOUNT 155366-01-000 AND TIE-WIRE 8343-01-000 45MM UP FROM THE BOTTOM TO LINE UP WITH THE RECEIVER EYE.

11 WITH 1JF AND 25H

25H	DVD/VCR-WITHOUT
1JF	HOME THEATER SYS-WITHOUT
78K	SATELLITE DISH-AUTOMATIC
10A	TV (REAR)-20"COLOR, STEREO
1JM	HOME THEATER SOUND SYSTEM
42J	TV-24" COLOR,STEREO W/REMOTE
40B	INVERTER-DC/AC, 300 WATT
35P	VIDEO SELECTION SYSTEM
25G	DVD/VCR,STEREO,W/REMOTE
265	CODES/STANDARDS-CSA/CMVSS
1B1	CODES/STANDARDS USA

1B1 265 06 F-SERIES

FIRST USED
06 A-BODIES

DO NOT SCALE DRAWING

TITLE:
WIRING INSTL-TV/DVD,FRONT

SHEET 2 PART NO 152124 REV

DWG NO 152124

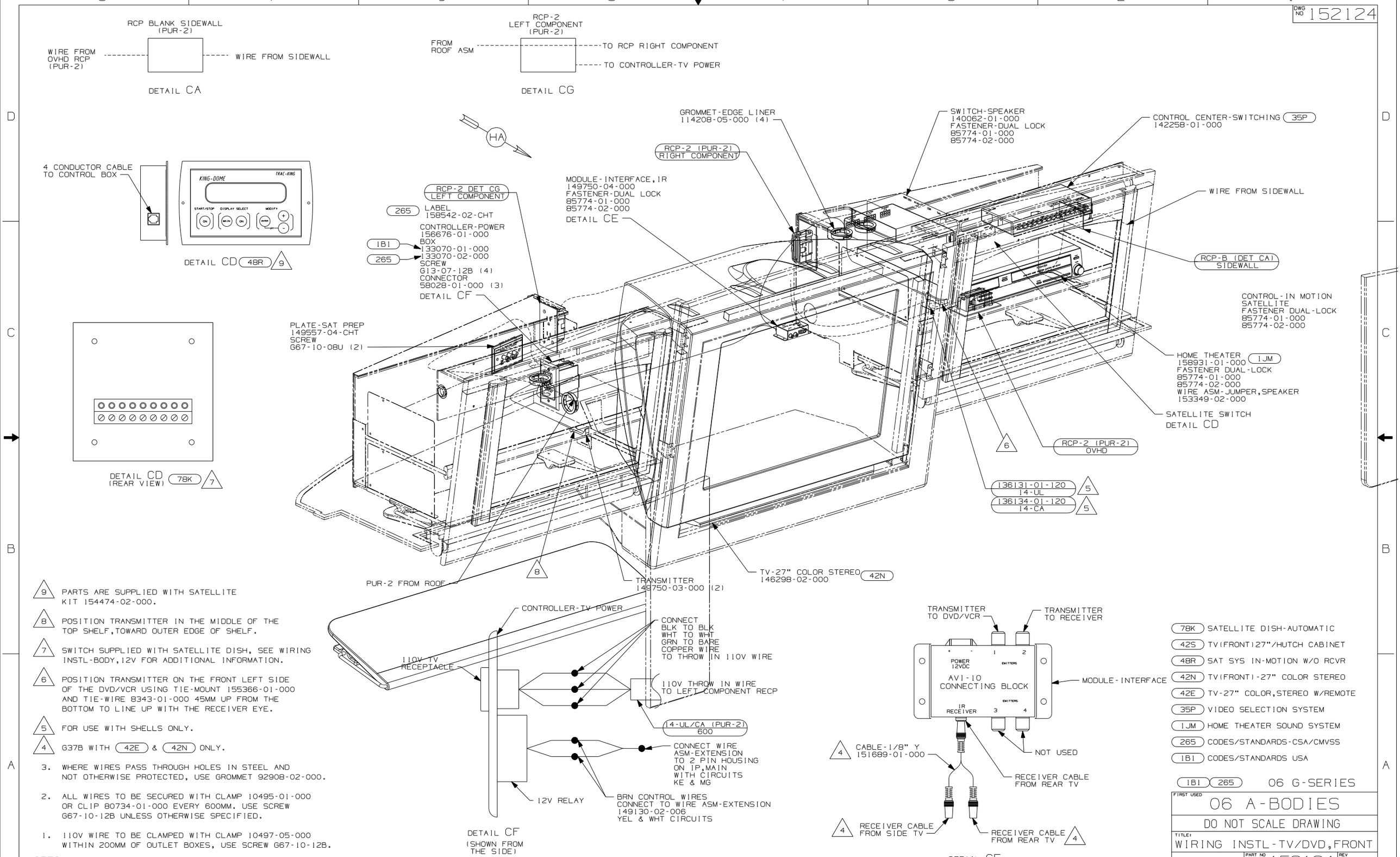

9 PARTS ARE SUPPLIED WITH SATELLITE KIT 154474-02-000.

8 POSITION TRANSMITTER IN THE MIDDLE OF THE TOP SHELF,TOWARD OUTER EDGE OF SHELF.

7 SWITCH SUPPLIED WITH SATELLITE DISH, SEE WIRING INSTL-BODY,12V FOR ADDITIONAL INFORMATION.

6 POSITION TRANSMITTER ON THE FRONT LEFT SIDE OF THE DVD/VCR USING TIE-MOUNT 155366-01-000 AND TIE-WIRE 8343-01-000 45MM UP FROM THE BOTTOM TO LINE UP WITH THE RECEIVER EYE.

5 FOR USE WITH SHELLS ONLY.

4 G37B WITH (42E) & (42N) ONLY.

3. WHERE WIRES PASS THROUGH HOLES IN STEEL AND NOT OTHERWISE PROTECTED, USE GROMMET 92908-02-000.

2. ALL WIRES TO BE SECURED WITH CLAMP 10495-01-000 OR CLIP 80734-01-000 EVERY 600MM. USE SCREW G67-10-12B UNLESS OTHERWISE SPECIFIED.

1. 110V WIRE TO BE CLAMPED WITH CLAMP 10497-05-000 WITHIN 200MM OF OUTLET BOXES, USE SCREW G67-10-12B.

NOTES:

78K	SATELLITE DISH-AUTOMATIC
42S	TV(FRONT)27"/HUTCH CABINET
48R	SAT SYS IN-MOTION W/O RCVR
42N	TV(FRONT)-27" COLOR STEREO
42E	TV-27" COLOR,STEREO W/REMOTE
35P	VIDEO SELECTION SYSTEM
1JM	HOME THEATER SOUND SYSTEM
265	CODES/STANDARDS-CSA/CMVSS
1B1	CODES/STANDARDS USA

1B1 265 06 G-SERIES

FIRST USED 06 A-BODIES

DO NOT SCALE DRAWING

TITLE: WIRING INSTL-TV/DVD,FRONT

SHEET 3 PART NO 152124 REV

DWG NO 152124

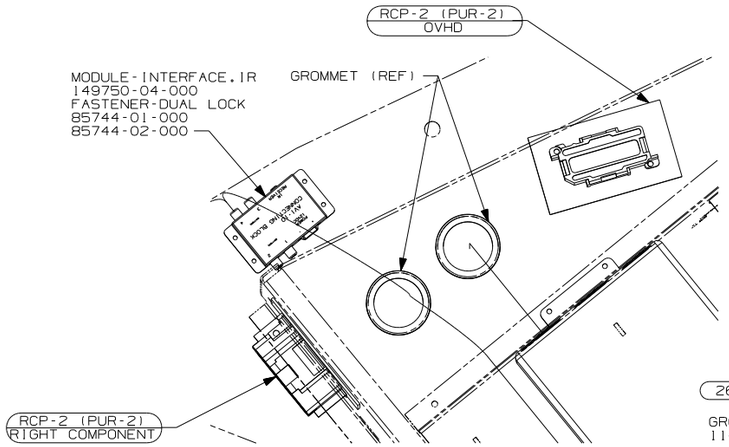

VIEW DA

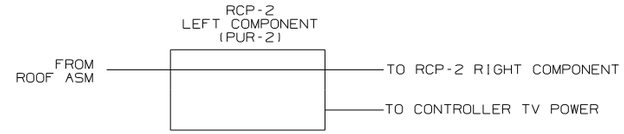

DETAIL DF

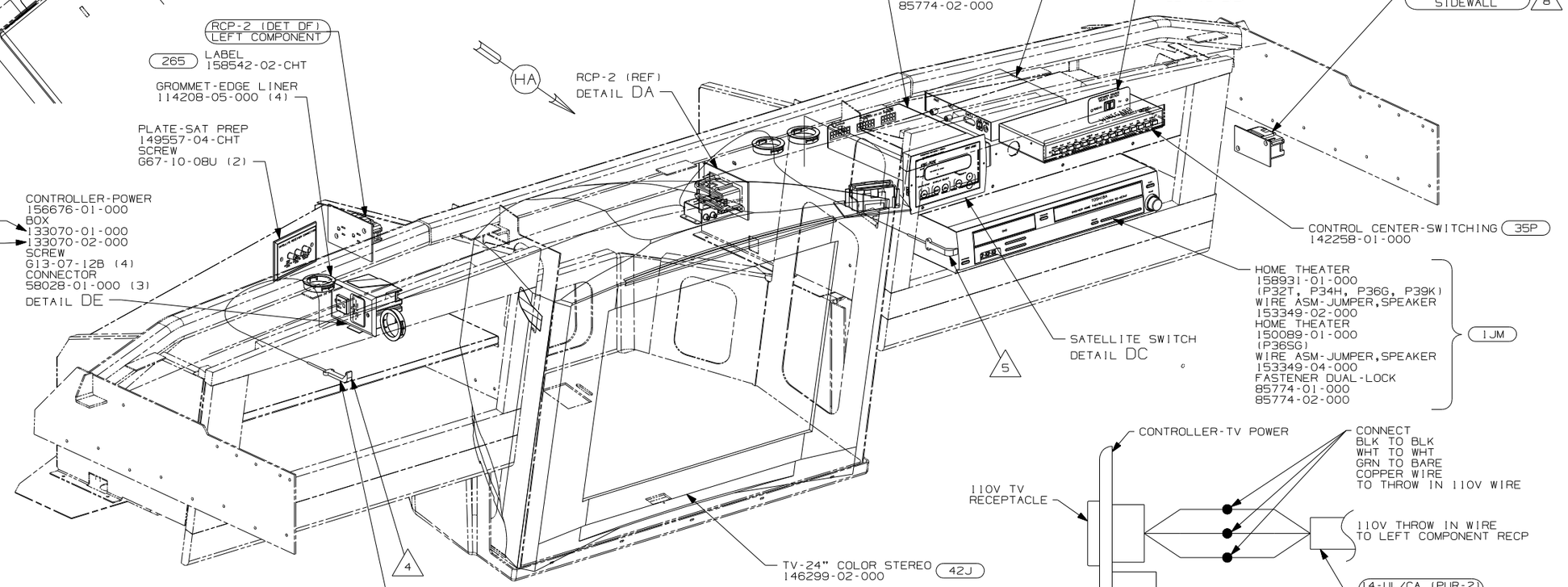

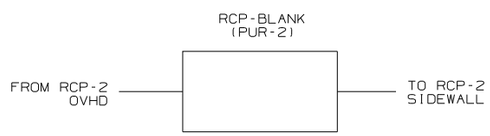

DET DD 8

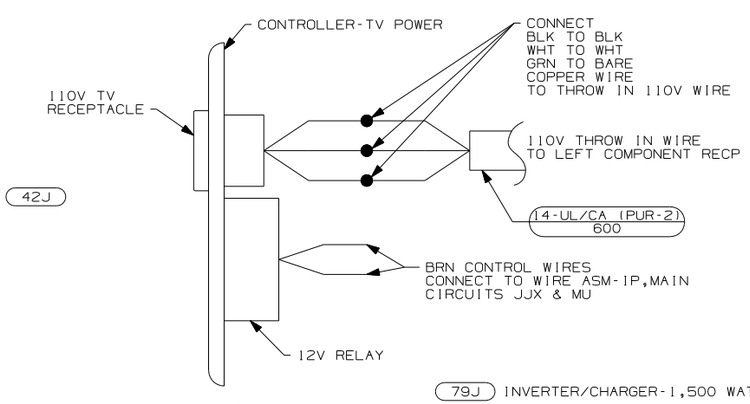

DETAIL DE
(SHOWN FROM
THE SIDE)

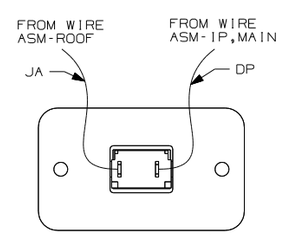

DETAIL DB 7

CONTROLLER-POWER
156676-01-000
BOX
133070-01-000
133070-02-000
SCREW
G13-07-12B (4)
CONNECTOR
58028-01-000 (3)
DETAIL CF

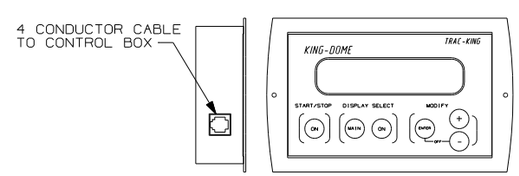

DETAIL DC 48R 9

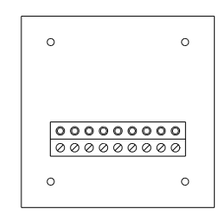

DETAIL DC
(REAR VIEW) 78K 6

9 PARTS ARE SUPPLIED WITH SATELLITE KIT 154474-02-000.

8 USED ON P39K ONLY.

7 REMOVE VINYL FROM CUTOUT AT INSTALATION.

6 SWITCH SUPPLIED WITH SATELLITE DISH, SEE WIRING INSTL-BODY,12V FOR ADDITIONAL INFORMATION.

5 POSITION TRANSMITTER ON THE FRONT LEFT SIDE OF THE DVD/VCR USING TIE-MOUNT 155366-01-000 AND TIE-WIRE 8343-01-000 45MM UP FROM THE BOTTOM TO LINE UP WITH THE RECEIVER EYE.

4 POSITION TRANSMITTER IN THE MIDDLE OF THE TOP SHELF, TOWARD OUTER EDGE OF SHELF.

3. WHERE WIRES PASS THROUGH HOLES IN STEEL AND NOT OTHERWISE PROTECTED, USE GROMMET 92908-02-000.

2. ALL WIRES TO BE SECURED WITH CLAMP 10495 OR 10497 OR WIRE TIE 8343 OR 108046 EVERY 600MM, USE SCREW G67-10-12B UNLESS OTHERWISE SPECIFIED.

1. 110V WIRE TO BE CLAMPED WITH CLAMP 10497-05-000 WITHIN 200MM OF OUTLET BOXES, USE SCREW G67-10-12B.

NOTES:

79J INVERTER/CHARGER-1,500 WATT
78K SATELLITE DISH-AUTOMATIC
48R SAT SYS IN-MOTION W/O RCVR
42J TV-24" COLOR,STEREO W/REMOTE
35P VIDEO SELECTION SYSTEM
1JM HOME THEATER SOUND SYSTEM

06 P-SERIES

FIRST USED
06 A-BODIES

DO NOT SCALE DRAWING

TITLE:
WIRING INSTL-TV/DVD,FRONT

SHEET 4 | PART NO 152124 | REV

DWG NO 152124

TRANSMITTER TO DVD/VCR
TRANSMITTER TO RECEIVER
MODULE-INTERFACE
AVI-10 CONNECTING BLOCK
NOT USED
RECEIVER CABLE FROM REAR TV
DETAIL EB

RCP-2 LEFT COMPONENT (PUR)
FROM ROOF ASM
TO RCP-2 RIGHT COMPONENT
TO CONTROLLER-TV POWER
DETAIL EE

WIRE ASM-ROOF
SWITCH-SPEAKER 140062-01-000
SATELLITE SWITCH DETAIL EA
(PUR) FROM ROOF

HA

RCP-2 DET EE LEFT COMPONENT
LABEL 158542-02-CHT 265

RCP-2 (PUR) RIGHT COMPONENT

MODULE-INTERFACE,IR
149750-04-000
FASTENER-DUAL LOCK
85744-01-000
85744-02-000
DETAIL EB

HOME THEATER
158931-01-000
FASTENER DUAL-LOCK
85774-01-000
85774-02-000
WIRE ASM-JUMPER,SPEAKER
153349-02-000
1JM

CONTROLLER-POWER
156676-01-000
BOX
1B1 133070-01-000
265 133070-02-000
SCREW
G13-07-12B (4)
CONNECTOR
58028-01-000 (3)
DETAIL ED

GROMMET-EDGE LINER
114208-05-000 (4)

PLATE-SAT PREP
149557-04-CHT
SCREW
G67-10-08U (2)

CONTROL CENTER-SWITCHING
142258-01-000
BRACKET-VIDEO SWITCH
156586-01-CHT
SCREW
G11-08-12U (4)
35P 11

RCP-2 (PUR) OVHD

CONTROL-IN MOTION SATELLITE
FASTENER DUAL-LOCK
85774-01-000
85774-02-000
10 48R

LAMP-ROPE
146514-03-000
(CUT LENGTH OF 72 INCHES)
7 9

TV-27" COLOR STEREO
146298-02-000
42N

SWITCH
DETAIL EC

TRANSMITTER
149750-03-000 (2)

LAMP-ROPE
146514-03-000
(CUT LENGTH OF 72 INCHES)
7 9

CONTROLLER-TV POWER
CONNECT
BLK TO BLK
WHT TO WHT
GRN TO BARE
COPPER WIRE
TO THROW IN 110V WIRE
110V TV RECEPTACLE
110V THROW IN WIRE TO LEFT COMPONENT RECP
14-UL/CA (PUR) 600
BRN CONTROL WIRES
CONNECT TO WIRE ASM-IP,MAIN CIRCUITS JJX & MU
12V RELAY
DETAIL ED
(SHOWN FROM THE SIDE)

JC OR LLA KKP
SWITCH-ROCKER
135740-01-CHT
SWITCH-BASE
135741-01-CHT
SWITCH-BEZEL
135742-01-CHT
SCREW
G11-08-08U (2)
DETAIL EC

4 CONDUCTOR CABLE TO CONTROL BOX
KING-DOME
TRAC-KING
START/STOP DISPLAY SELECT MODIFY
DETAIL EA 48R 10

DETAIL EA (REAR VIEW) 78K 4

9 SNAP ROPE LAMP IN CHANNELS ON OVER HEAD CABINETS.

8 PLACE CONNECTOR HERE TO MAKE CONNECTION TO MATING WIRE ASM.

7 CUT ROPE LIGHT AT X MARKS ON LIGHT AND INSTALL CONNECTOR 146514-02-000.

6 POSITION TRANSMITTER IN THE MIDDLE OF THE TOP SHELF,TOWARD OUTER EDGE OF SHELF.

5 POSITION TRANSMITTER ON THE FRONT LEFT SIDE OF THE DVD/VCR USING TIE-MOUNT 155366-01-000 AND TIE-WIRE 8343-01-000 45MM UP FROM THE BOTTOM TO LINE UP WITH THE RECEIVER EYE.

4 SWITCH SUPPLIED WITH SATELLITE DISH, SEE WIRING INSTL-BODY,12V FOR ADDITIONAL INFORMATION.

NOTES:

3. WHERE WIRES PASS THROUGH HOLES IN STEEL AND NOT OTHERWISE PROTECTED, USE GROMMET 92908-02-000.

2. ALL WIRES TO BE SECURED WITH CLAMP 10495-01-000 OR CLIP 80734-01-000 EVERY 600MM. USE SCREW G67-10-12B UNLESS OTHERWISE SPECIFIED.

1. 110V WIRE TO BE CLAMPED WITH CLAMP 10497-05-000 WITHIN 200MM OF OUTLET BOXES, USE SCREW G67-10-12B.

11 LOCATE BRACKET FLUSH TO THE FRONT OF THE SHELF & 220MM FROM THE LEFT SIDE.

10 PARTS ARE SUPPLIED WITH SATELLITE KIT 154476-02-000.

78K SATELLITE DISH-AUTOMATIC
48R SAT SYS IN-MOTION W/O RCVR
42N TV(FRONT)-27" COLOR STEREO
35P VIDEO SELECTION SYSTEM
1JM HOME THEATER SOUND SYSTEM
265 CODES/STANDARDS-CSA/CMVSS
1B1 CODES/STANDARDS USA

1B1 265 06 R-SERIES

FIRST USED
06 A-BODIES

DO NOT SCALE DRAWING

TITLE: WIRING INSTL-TV/DVD,FRONT

SHEET 5 PART NO 152124 REV

DWG NO 152124

TRANSMITTER TO DVD/VCR
TRANSMITTER TO RECEIVER
MODULE-INTERFACE
POWER 12VDC
AVI-10 CONNECTING BLOCK
IR RECEIVER
NOT USED
RECEIVER CABLE FROM REAR TV
DETAIL FB

RCP-2 LEFT COMPONENT (PUR)
FROM ROOF ASM
TO RCP-2 RIGHT COMPONENT
TO CONTROLLER-TV POWER
DETAIL FE

WIRE ASM-ROOF
SWITCH-SPEAKER 140062-01-000
SATELLITE SWITCH DETAIL FA
(PUR) FROM ROOF
HOME THEATER 158931-01-000
FASTENER DUAL-LOCK 85774-01-000 85774-02-000
WIRE ASM-JUMPER,SPEAKER 153349-02-000 (1JM)

RCP-2 (PUR) RIGHT COMPONENT
42N
42K
JA
HA
MODULE-INTERFACE,IR 149750-04-000
FASTENER-DUAL LOCK 85744-01-000 85744-02-000
DETAIL FB

CONTROLLER-POWER 156676-01-000
BOX 133070-01-000 (1B1)
133070-02-000 (265)
SCREW G13-07-12B (4)
CONNECTOR 58028-01-000 (3)
DETAIL FD

GROMMET-EDGE LINER 114208-05-000 (4)
PLATE-SAT PREP 149557-04-CHT
SCREW G67-10-08U (2)
SPEAKER 148026-03-CHT (2)
SCREW G11-08-08B (8)
BRACKET-MOUNT,SPEAKER 149422-02-CHT (2)
SCREW G67-08-12U (8) (1JM)

CONTROL CENTER-SWITCHING 142258-01-000
BRACKET-VIDEO SWITCH 156586-01-CHT
SCREW G11-08-12U (4) (35P) (11)

RCP-2 (PUR) OVHD
CONTROL-IN MOTION SATELLITE 85774-01-000 85774-02-000 (10)

TV-27" COLOR STEREO 146298-02-000 (42N)
TV-32" LCD 155599-01-000 (42K)

LAMP-ROPE 146514-03-000 (7) (9)
(CUT LENGTH OF 72 INCHES) (42N)
(CUT LENGTH OF 90 INCHES) (42K)

SWITCH DETAIL FC

4 CONDUCTOR CABLE TO CONTROL BOX

CONNECT BLK TO BLK WHT TO WHT GRN TO BARE COPPER WIRE TO THROW IN 110V WIRE

110V TV RECEPTACLE
110V THROW IN WIRE TO LEFT COMPONENT RECP
14-UL/CA (PUR) 600
CONTROLLER-TV POWER
BRN CONTROL WIRES CONNECT TO WIRE ASM-IP,MAIN CIRCUITS JJX & MU
12V RELAY
DETAIL FD (SHOWN FROM THE SIDE)

RCP-2 DET FE LEFT COMPONENT
LABEL 158542-02-CHT (265)

LAMP-ROPE 146514-03-000 (7) (9)
(CUT LENGTH OF 72 INCHES) (42N)
(CUT LENGTH OF 90 INCHES) (42K)

TRANSMITTER 149750-03-000 (2)

KING-DOME TRAC-KING
START/STOP DISPLAY SELECT MODIFY
DETAIL FA (48R) (10)

SWITCH-ROCKER 135740-01-CHT
SWITCH-BASE 135741-01-CHT
SWITCH-BEZEL 135742-01-CHT
SCREW G11-08-08U (2)
JC OR KKP LLA
DETAIL FC

DETAIL FA (REAR VIEW) (78K) (4)

(6) POSITION TRANSMITTER IN THE MIDDLE OF THE TOP SHELF,TOWARD OUTER EDGE OF SHELF.

(5) POSITION TRANSMITTER ON THE FRONT LEFT SIDE OF THE DVD/VCR USING TIE-MOUNT 155366-01-000 AND TIE-WIRE 8343-01-000 45MM UP FROM THE BOTTOM TO LINE UP WITH THE RECEIVER EYE.

(4) SWITCH SUPPLIED WITH SATELLITE DISH, SEE WIRING INSTL-BODY,12V FOR ADDITIONAL INFORMATION.

3. WHERE WIRES PASS THROUGH HOLES IN STEEL AND NOT OTHERWISE PROTECTED, USE GROMMET 92908-02-000.

2. ALL WIRES TO BE SECURED WITH CLAMP 10495-01-000 OR CLIP 80734-01-000 EVERY 600MM. USE SCREW G67-10-12B UNLESS OTHERWISE SPECIFIED.

1. 110V WIRE TO BE CLAMPED WITH CLAMP 10497-05-000 WITHIN 200MM OF OUTLET BOXES, USE SCREW G67-10-12B.

NOTES:

(10) PARTS ARE SUPPLIED WITH SATELLITE KIT 154476-02-000.

(9) SNAP ROPE LAMP IN CHANNELS ON OVER HEAD CABINETS.

(8) PLACE CONNECTOR HERE TO MAKE CONNECTION TO MATING WIRE ASM.

(7) CUT ROPE LIGHT AT X MARKS ON LIGHT AND INSTALL CONNECTOR 146514-02-000.

(11) LOCATE BRACKET FLUSH TO THE FRONT OF THE SHELF & 220MM FROM THE LEFT SIDE.

(78K) SATELLITE DISH-AUTOMATIC
(48R) SAT SYS IN-MOTION W/O RCVR
(42N) TV(FRONT)-27" COLOR STEREO
(35P) VIDEO SELECTION SYSTEM
(1JM) HOME THEATER SOUND SYSTEM
(42K) TV-32" COLOR,STEREO W/REMOTE
(265) CODES/STANDARDS-CSA/CMVSS
(1B1) CODES/STANDARDS USA

(1B1) (265) 06 S-SERIES

FIRST USED 06 A-BODIES

DO NOT SCALE DRAWING

TITLE: WIRING INSTL-TV/DVD,FRONT

SHEET 6 PART NO 152124 REV

DWG NO 152124

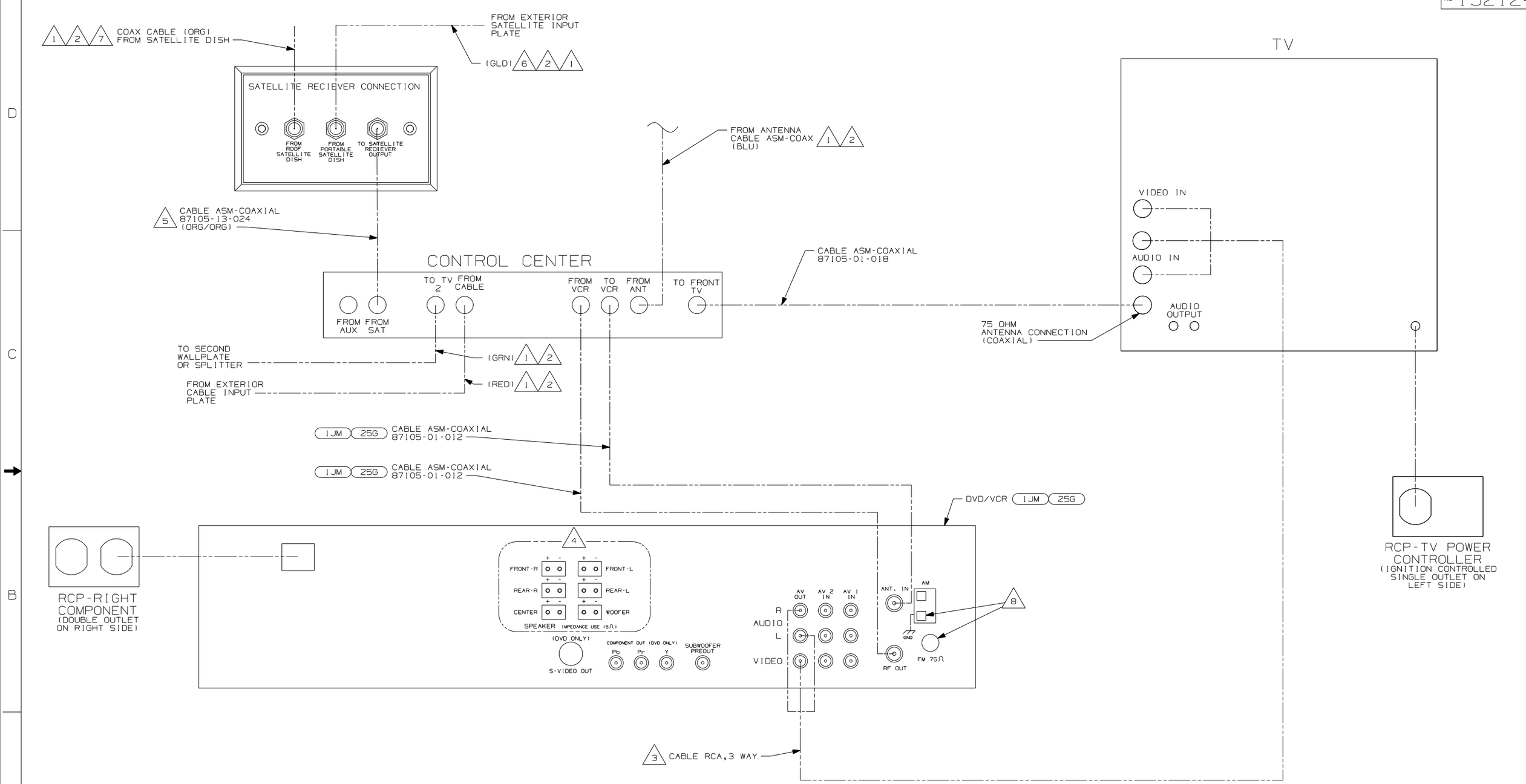

DETAIL GA

NOTES:

5. CONNECTED TO THE FRONT SIDE OF SATELLITE PREP PLATE, CONNECTION LABELED 'TO SATELLITE RECEIVER OUTPUT.'
4. WITH FEATURE (1JM) CUT SUPPLIED SPEAKER WIRES TO A LENGTH OF 150MM AND CONNECT TO MATCHING CIRCUITS ON WIRE ASM SIDE TV.
3. CABLE IS SUPPLIED WITH RECEIVER.
2. CABLE ROUTED IN ROOF.
1. CABLE ASM MARKED WITH COLORED TAPE.
8. ANTENNA CABLES ARE TO BE ROUTED INTO FRONT CAP AREA AND ATTACHED TO FRONT EDGE OF ROOF.
7. CONNECTED TO THE REAR SIDE OF SATELLITE PREP PLATE, CONNECTION LABELED 'FROM ROOF SATELLITE DISH.'
6. CONNECTED TO THE REAR SIDE OF SATELLITE PREP PLATE, CONNECTION LABELED 'FROM PORTABLE SATELLITE DISH.'

(43N) TV (RR)-19", VIDEO SELECTION
(25G) DVD/VCR,STEREO,W/REMOTE
(1JM) HOME THEATER SOUND SYSTEM

FIRST USED: 06 A-BODIES

DO NOT SCALE DRAWING

TITLE: WIRING INSTL-TV/DVD,FRONT

D-SERIES

SHEET 7 | PART NO 152124 | REV

DWG NO 152124

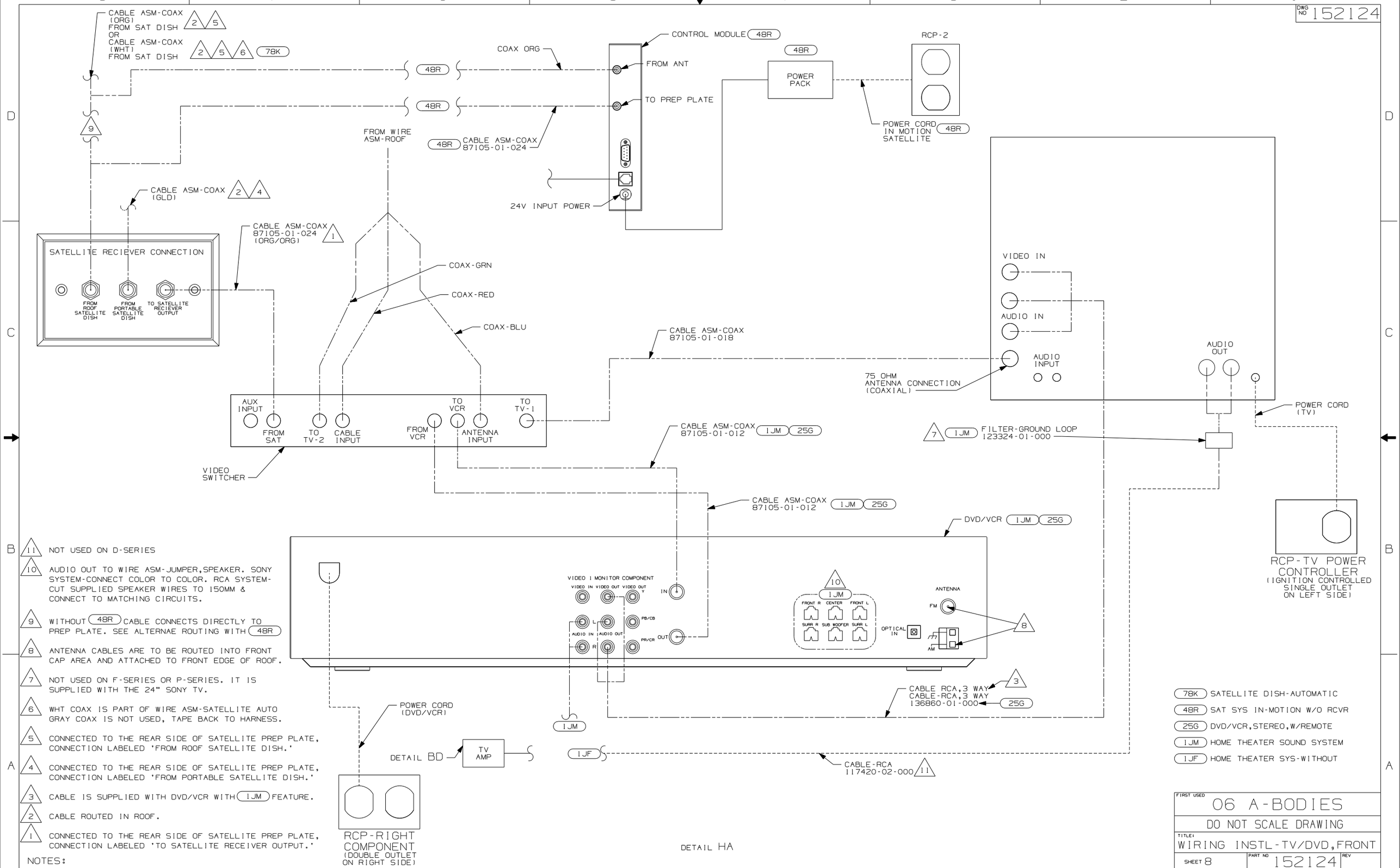

NOTES:

11. NOT USED ON D-SERIES
10. AUDIO OUT TO WIRE ASM-JUMPER,SPEAKER. SONY SYSTEM-CONNECT COLOR TO COLOR. RCA SYSTEM-CUT SUPPLIED SPEAKER WIRES TO 150MM & CONNECT TO MATCHING CIRCUITS.
9. WITHOUT (48R) CABLE CONNECTS DIRECTLY TO PREP PLATE. SEE ALTERNAE ROUTING WITH (48R)
8. ANTENNA CABLES ARE TO BE ROUTED INTO FRONT CAP AREA AND ATTACHED TO FRONT EDGE OF ROOF.
7. NOT USED ON F-SERIES OR P-SERIES. IT IS SUPPLIED WITH THE 24" SONY TV.
6. WHT COAX IS PART OF WIRE ASM-SATELLITE AUTO GRAY COAX IS NOT USED, TAPE BACK TO HARNESS.
5. CONNECTED TO THE REAR SIDE OF SATELLITE PREP PLATE, CONNECTION LABELED 'FROM ROOF SATELLITE DISH.'
4. CONNECTED TO THE REAR SIDE OF SATELLITE PREP PLATE, CONNECTION LABELED 'FROM PORTABLE SATELLITE DISH.'
3. CABLE IS SUPPLIED WITH DVD/VCR WITH (1JM) FEATURE.
2. CABLE ROUTED IN ROOF.
1. CONNECTED TO THE REAR SIDE OF SATELLITE PREP PLATE, CONNECTION LABELED 'TO SATELLITE RECEIVER OUTPUT.'

(78K) SATELLITE DISH-AUTOMATIC
(48R) SAT SYS IN-MOTION W/O RCVR
(25G) DVD/VCR,STEREO,W/REMOTE
(1JM) HOME THEATER SOUND SYSTEM
(1JF) HOME THEATER SYS-WITHOUT

FIRST USED: 06 A-BODIES

DO NOT SCALE DRAWING

TITLE: WIRING INSTL-TV/DVD,FRONT

SHEET 8 | PART NO 152124 | REV

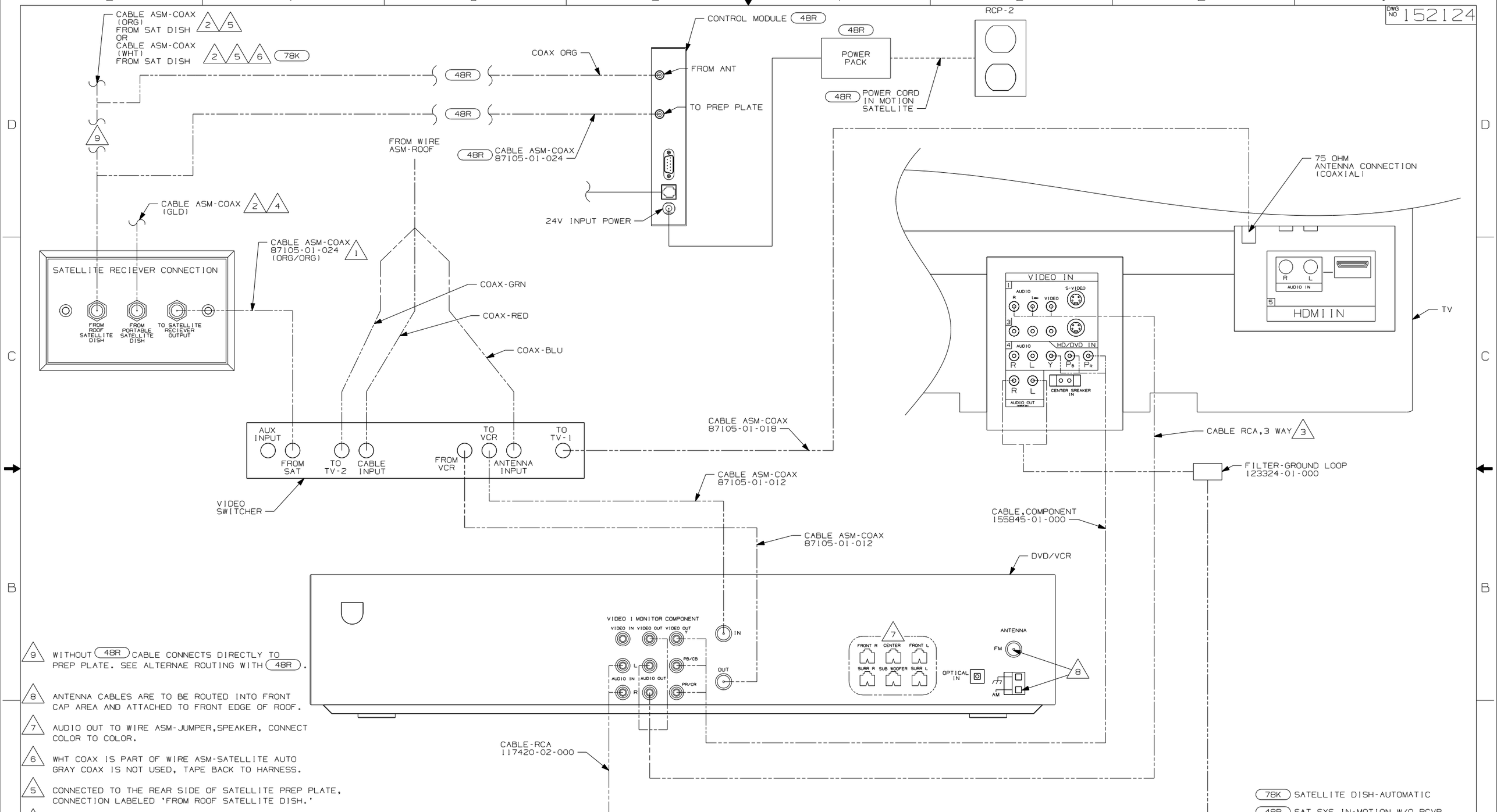

NOTES:

9. WITHOUT (48R) CABLE CONNECTS DIRECTLY TO PREP PLATE. SEE ALTERNAE ROUTING WITH (48R).
8. ANTENNA CABLES ARE TO BE ROUTED INTO FRONT CAP AREA AND ATTACHED TO FRONT EDGE OF ROOF.
7. AUDIO OUT TO WIRE ASM-JUMPER,SPEAKER, CONNECT COLOR TO COLOR.
6. WHT COAX IS PART OF WIRE ASM-SATELLITE AUTO GRAY COAX IS NOT USED, TAPE BACK TO HARNESS.
5. CONNECTED TO THE REAR SIDE OF SATELLITE PREP PLATE, CONNECTION LABELED 'FROM ROOF SATELLITE DISH.'
4. CONNECTED TO THE REAR SIDE OF SATELLITE PREP PLATE, CONNECTION LABELED 'FROM PORTABLE SATELLITE DISH.'
3. CABLE IS SUPPLIED WITH DVD/VCR.
2. CABLE ROUTED IN ROOF.
1. CONNECTED TO THE REAR SIDE OF SATELLITE PREP PLATE, CONNECTION LABELED 'TO SATELLITE RECEIVER OUTPUT.'

DETAIL JA

(78K) SATELLITE DISH-AUTOMATIC
(48R) SAT SYS IN-MOTION W/O RCVR

FIRST USED	06 A-BODIES
DO NOT SCALE DRAWING	
TITLE:	WIRING INSTL-TV/DVD,FRONT
SHEET 9	PART NO 152124 REV

RELEASE	REV A	DATE	DWG NO 121339

REV	ZONE	REVISION RECORD	DATE	DFTR-ORIG

CG --- SCREW G13-07-12U WAS G13-08-10U ON LSH-3 05/17/07 3677-2245

TERMINALS

NO.	PART NUMBER	DESCRIPTION
B-1	50003-01	TERMINAL-PIN, 16-14 GA,.156 DIA
B-2	50004-01	TERMINAL-RECP, 16-14 GA,.156 DIA
B-11	50003-02	TERMINAL-PIN, 16-14 GA,.180 DIA
B-12	50004-02	TERMINAL-RECP, 16-14 GA,.180 DIA
WP-1	106950-01	TERMINAL-PIN, 16-14 GA
WP-2	106950-02	TERMINAL-PIN, 10-12 GA
WP-3	106950-03	TERMINAL-PIN, 8 GA
R-1	35416-01	TERMINAL-RING, #10 STD, 8 GA
R-2	35416-02	TERMINAL-RING, #10 STD, 6 GA
R-3	35416-03	TERMINAL-RING, #10 STD, 10-12 GA
R-4	35416-04	TERMINAL-RING, #10 STD, 14-16 GA
R-5	37018-01	TERMINAL-RING, 5/16 STD, 12-10 GA
R-6	102777-01	TERMINAL-RING, #6 STD, 14-16 GA
R-7	102777-02	TERMINAL-RING, #6 STD, 10-12 GA
R-8	102777-03	TERMINAL-RING, #6 STD, 8 GA
R-9	33787-01	TERMINAL-RING, #10 STD, 14 GA
R-60	8325-01	TERMINAL-RING, 1/4 STD, 14-16 GA
R-61	8326-01	TERMINAL-RING, 3/8 STD, 14-16 GA
R-62	8327-01	TERMINAL-RING, #10 STD, 14-16 GA
R-63	8328-01	TERMINAL-RING, #10 STD, 10-12 GA
R-64	8328-02	TERMINAL-RING, 3/8 STD, 10-12 GA
R-65	8329-01	TERMINAL-RING, 3/8 STD, 8 GA
R-66	8331-01	TERMINAL-RING, 3/8 STD, 4 GA
R-67	8332-01	TERMINAL-RING, 1/4 STD, 6 GA
R-68	8332-02	TERMINAL-RING, 1/4 STD, 10 GA
R-69	8350-01	TERMINAL-RING, 3/8 STD, 6 GA
R-70	99275-02	TERMINAL-RING, 7/16 STD, 8 GA
R-71	101397-01	TERMINAL-RING, #10 STD, 14-16 GA
R-91	88791-01	TERMINAL-RING, 3/8, 90°, 1/0 GA
R-92	88791-02	TERMINAL-RING, 3/8, 90°, 2 GA
R-93	8348-01	TERMINAL-RING, 3/8 STD, 2 GA
R-94	99275-01	TERMINAL-RING, 7/16 STD, 1/0 GA
RF-51	7944-01	TERMINAL-SPADE, 12-10 GA, #8 STUD
RF-52	7945-01	TERMINAL-SPADE, 18-14 GA, #8 STUD
TR-1	47443-01	TERMINAL-RECP, 16-14 GA,.25, INS
TR-2	47443-02	TERMINAL-RECP, 12-10 GA,.25, INS
TR-3	47443-05	TERMINAL-RECP, 22-18 GA,.25, INS
TR-11	47443-03	TERMINAL-RECP, 16-14 GA,.19, INS
TR-12	47443-04	TERMINAL-RECP, 16-14 GA,.11, INS
TR-21	80015-01	TERMINAL-RECP, 22-18 GA,.250, 90 DEG FOR USE WITH TAB THICKNESS .032
TR-22	80015-02	TERMINAL-RECP, 16-14 GA,.187, 90 DEG FOR USE WITH TAB THICKNESS .032
TR-23	80015-03	TERMINAL-RECP, 16-14 GA,.250, 90 DEG FOR USE WITH TAB THICKNESS .032
TR-24	80015-04	TERMINAL-RECP, 16-14 GA,.187, 90 DEG FOR USE WITH TAB THICKNESS .020
TR-51	7940-01	TERMINAL-RECP, 16-12 GA,.25, UNINS
TR-52	23809-01	TERMINAL-RECP, 16-14 GA,.19, UNINS
TR-53	23809-02	TERMINAL-RECP, 18-20 GA,.25, UNINS
TR-54	49270-01	TERMINAL-RECP, 18-20 GA,.19, UNINS
TR-55	7940-02	TERMINAL-RECP, 10 GA, .25, UNINS
TT-1	85745-02	TERMINAL-TAB, 16-14 GA,.25, INS
TT-2	85745-03	TERMINAL-TAB, 10-12 GA,.25, INS
TT-11	85745-04	TERMINAL-TAB, 18-22 GA,.19, INS
TT-51	7942-01	TERMINAL-TAB, 16-14 GA,.25, UNINS
TT-52	7943-01	TERMINAL-TAB, 14-10 GA,.25, UNINS
MF6-1	129236-01	TERMINAL-FEM, M/P, 630, 10-12
MF6-2	129236-02	TERMINAL-FEM, M/P, 630, 14-16

SPLICES

NO.	PART NUMBER	DESCRIPTION
BS-1	31876-01	SPLICE-BUTT, 16-14 GA, BLUE
BS-2	31876-02	SPLICE-BUTT, 12-10 GA, YELLOW
BS-3	31876-03	SPLICE-BUTT, 22-18 GA, RED
BS-SB	100070-01	SPLICE-BUTT, 14-16 GA, SHRINK,BLUE
BS-RB	112823-01	SPLICE-BUTT, 14-22 GA, REDUCER
S-1	7946-01	SPLICE, 1-6 MM²
S-2	23808-01	SPLICE, 6-9 MM²
I-2	7956-02	SHRINK WRAP .375 DIA
I-5	7956-05	SHRINK WRAP .25 DIA
SH-1	58028-01	SPLICE-HAT
S-10	101173-01	SPLICE-BARREL, 26300 CMA

NO.	PART NUMBER	DESCRIPTION
SP-1	90986-02	PLUG ASM-ELECTRIC STEP
SP-2	142524-01-000 098261-01-000 098262-07-000 098261-02-000 (3) 098262-01-000 (3)	HOUSING-4 PIN SOCKET-CONNECTOR SEAL-CONNECTOR SOCKET-CONNECTOR SEAL-CONNECTOR
HR-1	63910-01	HOUSING-RELAY
MP-8 MP-10 MPP CAV-1 CON-3	125323-02 125323-01 125324-01 125325-01 98262-03	HOUSING-PIN, 8 CAVITY HOUSING-PIN, 10 CAVITY TERMINAL-MALE, M/P, 150 SEAL-CAVITY, 150-SERIES M/P SEAL-CONNECTOR
LS-8 LS-10	125323-03 125323-04	LOCK-SECONDARY 8 POSITION LOCK-SECONDARY 10 POSITION
H-8 H-12	108355-01 108355-02	HOUSING-SWITCH, 8 POSITION HOUSING-SWITCH, 12 POSITION

NO.	PART NUMBER	DESCRIPTION
GEN-1	125323-02-000 125324-01-000 (4) 098262-03-000 (4) 125325-01-000 (4) 125323-03-000	HOUSING-8 POSN, MALE ,150 SERIES TERMINAL-MALE, M/P, 150 SEAL-CONNECTOR SEAL-CAVITY, 150 SERIES M/P LOCK-SECONDARY 8 POSITION
GEN-2	125323-01-000 125324-01-000 (5) 098262-03-000 (5) 125325-01-000 (5) 125323-04-000	HOUSING-10 POSN, MALE ,150 SERIES TERMINAL-MALE, M/P, 150 SEAL-CONNECTOR SEAL-CAVITY, 150 SERIES M/P LOCK-SECONDARY 10 POSITION

HOUSINGS AND TERMINALS

NO.	PART NUMBER	DESCRIPTION
HS-2	88474-10	HOUSING-SOCKET, 2 CAVITY
HS-3	88474-09	HOUSING-SOCKET, 3 CAVITY
HS-4	88474-08	HOUSING-SOCKET, 4 CAVITY
HS-5	88474-07	HOUSING-SOCKET, 5 CAVITY
HS-6	88474-06	HOUSING-SOCKET, 6 CAVITY
HS-7	88474-05	HOUSING-SOCKET, 6 CAVITY-IN LINE
HS-9	88474-03	HOUSING-SOCKET, 9 CAVITY
HS-12	88474-01	HOUSING-SOCKET, 12 CAVITY
HS-15	88474-02	HOUSING-SOCKET, 15 CAVITY
HS-2-R	88474-12	HOUSING-SOCKET, 2 CAVITY-RED
HP-2	88473-10	HOUSING-PIN, 2 CAVITY
HP-3	88473-09	HOUSING-PIN, 3 CAVITY
HP-4	88473-08	HOUSING-PIN, 4 CAVITY
HP-5	88473-07	HOUSING-PIN, 5 CAVITY
HP-6	88473-06	HOUSING-PIN, 6 CAVITY
HP-7	88473-05	HOUSING-PIN, 6 CAVITY-IN LINE
HP-8	88473-04	HOUSING-PIN, 8 CAVITY-IN LINE
HP-9	88473-03	HOUSING-PIN, 9 CAVITY
HP-12	88473-01	HOUSING-PIN, 12 CAVITY
HP-15	88473-02	HOUSING-PIN, 15 CAVITY
HP-2-R	88473-15	HOUSING-PIN, 2 CAVITY-RED
HP-3-B	88473-12	HOUSING-PIN, 3 CAVITY-BLUE
HP-3-G	88473-13	HOUSING-PIN, 3 CAVITY-GREEN
HP-3-R	88473-14	HOUSING-PIN, 3 CAVITY-RED
TS-1	88476-01	SOCKET-CONNECTOR, 20-14 GA
TS-2	88476-02	SOCKET-CONNECTOR, 12-10 GA
TP-1	88475-01	PIN-CONNECTOR, 20-14 GA
TP-2	88475-02	PIN-CONNECTOR, 12-10 GA
HS2HA	137208-01	HOUSING-SOCKET, 2 CAVITY-HIGH AMP
HP2HA	137207-01	HOUSING-PIN, 2 CAVITY-HIGH AMP
TS-HA	137210-01	SOCKET-CONNECTOR, 10AWG HIGH AMP
TP-HA	137209-01	PIN-CONNECTOR, 10AWG HIGH AMP
H-HA	104100-01	HOUSING, 1 CAVITY 75 AMP
T-HA	104100-03	TERMINAL 10 AWG - 6 AWG 75 AMP

BALLOON CALLOUT LEGEND

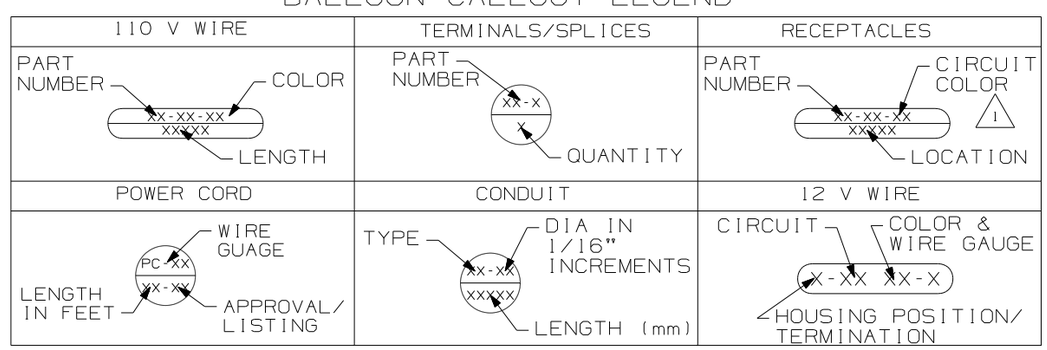

NOTES:

1. FOR RECP-BLANK, DET-X DENOTES DETAIL VIEW.
2. CONTACT WIRE PREP PRIOR TO USING FOR TOOLING PURPOSES.

WINNEBAGO INDUSTRIES

DFTR | ORIG. DATE
CHKR | ALL DIMENSIONS ARE IN MILLIMETERS
P.E.
M.E. | FIRST USED 96 MH'S
DSNR

UNSPECIFIED TOLERANCES ARE:
WHOLE DIM (X) :
ONE-PLACE (X.X) :
TWO-PLACE (X.XX) :
ANGLE :
THIRD ANGLE PROJECTION

MATERIAL:

DO NOT SCALE DRAWING

TITLE: PART LISTING-ELECTRICAL

SHEET 1 OF 7 | PART NO 121339 | REV

DWG NO 121339

WIRE-SINGLE INS CONDUCTOR, STRANDED

NO.	PART NUMBER	DESCRIPTION
18-W	156658-01	WIRE, 18 GA. WHITE, PVC
18-Y	156658-02	WIRE, 18 GA. YELLOW, PVC
16-Y	89360-01	WIRE, 16 GA. YELLOW, PVC
16-W	89360-02	WIRE, 16 GA. WHITE, PVC
14-Y	48554-02	WIRE, 14 GA. YELLOW, PVC
14-W	48554-04	WIRE, 14 GA. WHITE, PVC
12-Y	48555-02	WIRE, 12 GA. YELLOW, PVC
12-W	48555-04	WIRE, 12 GA. WHITE, PVC
10-Y	8000-03	WIRE, 10 GA. YELLOW, PVC
10-W	8000-05	WIRE, 10 GA. WHITE, PVC
8-B	8005-01	WIRE, 8 GA. BLACK, PVC
8-G	8005-03	WIRE, 8 GA. GREEN, PVC
6-B	70065-01	WIRE, 6 GA. BLACK, PVC
6-G	70065-03	WIRE, 6 GA. GREEN, PVC
18-WX	121015-01	WIRE, 18 GA. WHITE, XLPE
18-YX	121015-02	WIRE, 18 GA. YELLOW, XLPE
16-YX	116675-01	WIRE, 16 GA. YELLOW, XLPE
16-WX	116675-02	WIRE, 16 GA. WHITE, XLPE
14-YX	98586-01	WIRE, 14 GA. YELLOW, XLPE
14-WX	98586-02	WIRE, 14 GA. WHITE, XLPE
12-YX	98609-01	WIRE, 12 GA. YELLOW, XLPE
12-WX	98609-02	WIRE, 12 GA. WHITE, XLPE
10-YX	116676-03	WIRE, 10 GA. YELLOW, XLPE
10-WX	116676-04	WIRE, 10 GA. WHITE, XLPE
8-BX	116674-01	WIRE, 8 GA. BLACK, XLPE
8-GX	116674-02	WIRE, 8 GA. GREEN, XLPE
6-BX	116687-01	WIRE, 6 GA. BLACK, XLPE
6-GX	116687-02	WIRE, 6 GA. GREEN, XLPE

WIRE-NM SHEATHED CABLE

NO.	PART NUMBER	DESCRIPTION
14 UL	8027-01-000	WIRE 14-2 ROMEX W/GROUND (UL)
14 CA	8023-02-000	WIRE 14-2 ROMEX W/GROUND (CAN)
12 UL	8026-01-000	WIRE 12-2 ROMEX W/GROUND (UL)
12 CA	8023-01-000	WIRE 12-2 ROMEX W/GROUND (CAN)
12-3 UL	8026-03-000	WIRE 12-3 ROMEX W/GROUND (UL)
12-3 CA	8023-03-000	WIRE 12-3 ROMEX W/GROUND (CAN)
10 UL	8022-01-000	WIRE 10-2 ROMEX W/GROUND (UL)
10 CA	24743-01-000	WIRE 10-2 ROMEX W/GROUND (CAN)
6-3 UL	108914-01-000	WIRE 6-3 ROMEX W/GROUND (UL)
6-3 CA	113136-01-000	WIRE 6-3 ROMEX W/GROUND (CAN)
6-2 UL	108914-02-000	WIRE 6-2 ROMEX W/GROUND (UL)
4-3 UL	128375-01-000	WIRE 4-3 ROMEX W/GROUND (UL)
4-3 CA	128375-01-000	WIRE 4-3 ROMEX W/GROUND (CAN)

CONDUIT

NO.	PART NUMBER	DESCRIPTION	TEMP.
C-4	41953-07-000	CONDUIT-CONVOLUTE,SLIT .25"ID	194° F
C-6	41953-06-000	CONDUIT-CONVOLUTE,SLIT .38"ID	194° F
C-8	41953-01-000	CONDUIT-CONVOLUTE,SLIT .50"ID	194° F
C-10	41953-02-000	CONDUIT-CONVOLUTE,SLIT .63"ID	194° F
C-16	41953-03-000	CONDUIT-CONVOLUTE,SLIT 1.0"ID	194° F
C-24	41953-08-000	CONDUIT-CONVOLUTE,SLIT 1.5"ID	194° F
C-32	41953-15-000	CONDUIT-CONVOLUTE,SLIT 2.0"ID	194° F
CX-8	41953-09-000	CONDUIT-CONVOLUTE,SLIT .50"ID	239° F
CX-12	41953-10-000	CONDUIT-CONVOLUTE,SLIT .75"ID	239° F
CX-16	41953-11-000	CONDUIT-CONVOLUTE,SLIT 1.0"ID	239° F
CX-20	41953-13-000	CONDUIT-CONVOLUTE,SLIT 1.25"ID	239° F
CX-24	41953-14-000	CONDUIT-CONVOLUTE,SLIT 1.50"ID	239° F
CX-32	41953-16-000	CONDUIT-CONVOLUTE,SLIT 2.0"ID	239° F
CN-10	41953-05-000	CONDUIT-CONVOLUTE,NOT SLIT .63"ID	194° F
CN-16	41953-12-000	CONDUIT-CONVOLUTE,NOT SLIT 1.0"ID	194° F

POWER CORDS

NO.	PART NUMBER	DESCRIPTION
PC-10/28	8054-01-000	POWER CORD 10 GA, 30 AMP, 28 FT. (UL/CA)
PC-10/35	8054-02-000	POWER CORD 10 GA, 30 AMP, 35 FT. (UL/CA)
PC-10/30-CA	8052-01-000	SUPERCEEDED BY 8054-01-000
PC-6/36	108934-01-000	POWER CORD 6 GA, 50 AMP, 36 FT. (UL/CA)
PC-6/36-FX	108934-02-000	POWER CORD 6 GA, 50 AMP, 36 FT. (UL/CSA) SUPERFLEX
PC-6/36-CA	113096-01-000	SUPERCEEDED BY 108934-02-000

BATTERY CABLE LEGEND

COLOR	DESCRIPTION
PURPLE	CHASSIS BATTERY TO SOLENOID
BLUE	HYDRAULIC JACKS PUMP
RED	BATTERY TO STARTER
GREEN	BATTERY TO GENERATOR
YELLOW	COACH BATTERY TO SOLENOID

RECEPTACLES

NO.	PART NUMBER	DESCRIPTION
RCP-1	86738-02-CHT	RECEPTACLE-SINGLE, FLUSH MOUNT
RCP-2	86738-01-CHT	RECEPTACLE-DOUBLE, FLUSH MOUNT
RCP-3	58707-01-000	RECEPTACLE-SINGLE, SURFACE MOUNT
RCP-4	157360-01-000	RECEPTACLE-SINGLE,SURFACE MOUNT,20A
RCP-5	160984-01-CHT	RECEPTACLE-SINGLE,FLUSH MOUNT,20A
RCP-B	58707-02-000	RECEPTACLE-BLANK, JUNCTION
RCP-E	131826-01-CHT	INCLUDES COVER & GASKET

CIRCUIT COLOR LEGEND

110V CIRCUIT	WIRE COLOR	COAXIAL CIRCUIT
A/C CIRCUIT 1	RED	CABLE INPUT W/O SPLITTER
A/C CIRCUIT 2	GRN	REAR TV W/O SPLITTER
GENERAL RECPS 1	BLU	ANTENNA
GENERAL RECPS 2	BRN	FRONT TV
GENERAL RECPS 3	PUR	VCR INPUT
GENERAL RECPS 4	GRY	
REFRIGERATOR/ CONVERTER	YEL	EXT ENT CTR
MICROWAVE	BLK	AUX INPUT
WATER HEATER	WHT	
WASHER/DRYER	GLD	
DISHWASHER	SIL	
	ORG	SATELLITE PLATE INPUT
	ORG/ORG	SATELLITE PLATE OUTPUT
	RED/RED	CABLE INPUT W/SPLITTER
	GRN/GRN	REAR TV W/SPLITTER
	PUR/PUR	VCR OUTPUT

FIRST USED 96 MH'S

DO NOT SCALE DRAWING

TITLE: PART LISTING-ELECTRICAL

SHEET 2 PART NO 121339 REV

DWG NO 121339

LAMP ASM-PACKAGE,PANCAKE

NO	PART NUMBER	DESCRIPTION
LF1-1	LAMP 98024-01-CHT SCREW G11-08-16U (4) CONNECTOR 58028-01-000 (2)	LAMP ASM, FROSTED LENS, 1 BULB W/SWITCH PROGRESSIVE DYNAMICS INC.
LF2-1	LAMP 98024-03-CHT SCREW G11-08-16U (6) CONNECTOR 58028-01-000 (2)	LAMP ASM, FROSTED LENS, 2 BULB W/SWITCH PROGRESSIVE DYNAMICS INC.
LO1-1	LAMP 98024-05-CHT SCREW G11-08-16U (4) CONNECTOR 58028-01-000 (2)	LAMP ASM, OPTI CLEAR LENS, 1 BULB W/SWITCH PROGRESSIVE DYNAMICS INC.
LO2-1	LAMP 98024-06-CHT SCREW G11-08-16U (6) CONNECTOR 58028-01-000 (2)	LAMP ASM, OPTI CLEAR LENS, 2 BULB W/SWITCH PROGRESSIVE DYNAMICS INC.
LF1N1	LAMP 98024-07-CHT SCREW G11-08-16U (4) CONNECTOR 58028-01-000 (2)	LAMP ASM, FROSTED LENS, 1 BULB W/O SWITCH PROGRESSIVE DYNAMICS INC.
LF2N1	LAMP 98024-08-CHT SCREW G11-08-16U (6) CONNECTOR 58028-01-000 (2)	LAMP ASM, FROSTED LENS, 2 BULB W/O SWITCH PROGRESSIVE DYNAMICS INC.
LFSN1	LAMP 98024-09-CHT SCREW G11-08-16U (6) CONNECTOR 58028-01-000 (2)	LAMP ASM, SINGLE FROSTED LENS, 2 BULB W/O SWITCH PROGRESSIVE DYNAMICS INC.

LAMP ASM-PACKAGE,HALOGEN

NO	PART NUMBER	DESCRIPTION
HAL	LAMP 123775-01-CHT SCREW (SUPPLIED) CONNECTOR 58028-01-000 (2)	LAMP ASM-HALOGEN, READING 1 BULB
HAL-S	LAMP 123775-01-CHT SPACER 123775-02-CHT SCREW G13-06-16U (3) CONNECTOR 58028-01-000 (2)	LAMP ASM-HALOGEN, READING WITH 3/4" SPACER 1 BULB

LAMP ASM-PACKAGE,PANCAKE

NO	PART NUMBER	DESCRIPTION
LF1-2	LAMP 137417-01-CHT SCREW G11-08-16U (4) CONNECTOR 58028-01-000 (2)	LAMP ASM, FROSTED LENS, 1 BULB W/SWITCH PROGRESSIVE DYNAMICS INC.
LF2-2	LAMP 137417-04-CHT SCREW G11-08-16U (6) CONNECTOR 58028-01-000 (2)	LAMP ASM, FROSTED LENS, 2 BULB W/SWITCH PROGRESSIVE DYNAMICS INC.
LO1-2	LAMP 137417-02-CHT SCREW G11-08-16U (4) CONNECTOR 58028-01-000 (2)	LAMP ASM, OPTI CLEAR LENS, 1 BULB W/SWITCH PROGRESSIVE DYNAMICS INC.
LO2-2	LAMP 137417-05-CHT SCREW G11-08-16U (6) CONNECTOR 58028-01-000 (2)	LAMP ASM, OPTI CLEAR LENS, 2 BULB W/SWITCH PROGRESSIVE DYNAMICS INC.
LF1N2	LAMP 137417-03-CHT SCREW G11-08-16U (4) CONNECTOR 58028-01-000 (2)	LAMP ASM, FROSTED LENS, 1 BULB W/O SWITCH PROGRESSIVE DYNAMICS INC.
LFSN2	LAMP 137417-06-CHT SCREW G11-08-16U (6) CONNECTOR 58028-01-000 (2)	LAMP ASM, SINGLE FROSTED LENS, 2 BULB W/O SWITCH PROGRESSIVE DYNAMICS INC.

LAMP ASM-PACKAGE,PORCH

NO	PART NUMBER	DESCRIPTION
LEXT-1	LAMP 97917-01-CHT SCREW G67-10-129 (4) CONNECTOR 58028-01-000 (2)	LAMP ASM-PORCH, SURFACE MOUNT BARGMAN
LEXT-2UL	LAMP 8089-01-000 SCREW G68-06-10E (2) CONNECTOR 58028-01-000 (2)	LAMP ASM-PORCH, RECESSED UL LIST JRV PROD
LEXT-2CA	LAMP 8089-02-000 SCREW G68-06-10E (2) CONNECTOR 58028-01-000 (2)	LAMP ASM-PORCH, RECESSED CAN LIST JRV PROD

LEGEND

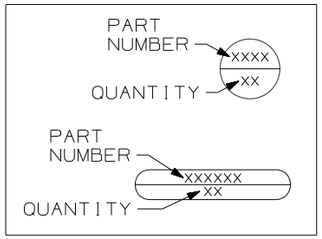

FIRST USED 96 MH'S

DO NOT SCALE DRAWING

TITLE: PART LISTING-ELECTRICAL

SHEET 3 | PART NO 121339 | REV

DWG NO 121339

LAMP ASM-PACKAGE,FLUORESCENT

NO	PART NUMBER	DESCRIPTION
FLU-1	LAMP 91936-02-CHT SCREW G11-08-12U (4) CONNECTOR 58028-01-000 (2)	LAMP ASM-FLUORESCENT 12" 2 BULB W/SWITCH THIN-LITE
FLU-2	LAMP 91936-01-CHT SCREW G11-08-12U (4) CONNECTOR 58028-01-000 (2)	LAMP ASM-FLUORESCENT 18" 2 BULB W/SWITCH THIN-LITE
FLU-3	LAMP 127327-01-CHT SCREW G11-08-12U (2) CONNECTOR 58028-01-000 (2)	LAMP ASM-FLUORESCENT 18" 1-12" BULB W/SWITCH THIN-LITE
FLU-4	LAMP 130338-01-CHT SCREW G11-08-12U (4) CONNECTOR 58028-01-000 (2)	LAMP ASM-FLUORESCENT 18" 2 BULB SURFACE MOUNT W/SWITCH THIN-LITE
FLU-5	LAMP 153464-02-CHT SCREW G11-08-12U (4) CONNECTOR 58028-01-000 (2)	LAMP ASM-FLUORESCENT 12" 2 BULB W/SWITCH COOL WHITE BULB THIN-LITE CUTOUT-122 X 336
FLU-6	LAMP 130338-02-CHT SCREW G11-08-12U (4) CONNECTOR 58028-01-000 (2)	LAMP ASM-FLUORESCENT 18" 2 BULB SURFACE MOUNT WARM WHITE BULB W/SWITCH THIN-LITE
FLU-7	LAMP 153464-05-CHT SCREW G11-08-12U (4) CONNECTOR 58028-01-000 (2)	LAMP ASM-FLUORESCENT 12" 2 BULB W/SWITCH WARM WHITE BULB THIN-LITE CUTOUT-122 X 336
FLUN1	LAMP 91936-04-CHT SCREW G11-08-12U (4) CONNECTOR 58028-01-000 (2)	LAMP ASM-FLUORESCENT 12" 2 BULB W/O SWITCH THIN-LITE
FLUN2	LAMP 91936-03-CHT SCREW G11-08-12U (4) CONNECTOR 58028-01-000 (2)	LAMP ASM-FLUORESCENT 18" 2 BULB W/O SWITCH THIN-LITE
FLUN3	LAMP 153464-01-CHT SCREW G11-08-12U (4) CONNECTOR 58028-01-000 (2)	LAMP ASM-FLUORESCENT 12" 2 BULB W/O SWITCH COOL WHITE BULB THIN-LITE CUTOUT-122 X 336

LAMP ASM-PACKAGE,FLUORESCENT

NO	PART NUMBER	DESCRIPTION
FLUN4	LAMP 153464-03-CHT SCREW G11-08-12U (6) CONNECTOR 58028-01-000 (2)	LAMP ASM-FLUORESCENT 18" 2 BULB W/O SWITCH COOL WHITE BULB THIN-LITE CUTOUT-122 X 480
FLUN5	LAMP 153464-06-CHT SCREW G11-08-12U (6) CONNECTOR 58028-01-000 (2)	LAMP ASM-FLUORESCENT 18" 2 BULB W/O SWITCH WARM WHITE BULB THIN-LITE CUTOUT-122 X 480
FLUN6	LAMP 153464-04-CHT SCREW G11-08-12U (6) CONNECTOR 58028-01-000 (2)	LAMP ASM-FLUORESCENT 12" 2 BULB W/O SWITCH WARM WHITE BULB THIN-LITE CUTOUT-122 X 336

LAMP ASM-PACKAGE,MAKEUP LAMP

NO	PART NUMBER	DESCRIPTION
LMU3-1	LAMP 110235-01-CHT SCREW W/SPACER (SUPPLIED) CONNECTOR 58028-01-000 (2)	LAMP ASM-MAKEUP (W/O MIRROR) 3 BULB (SUPPLIED) PROGRESSIVE DYNAMICS
LMM3-2	LAMP 123774-03-CHT SCREW (SUPPLIED) BULB 123918-01-000 (3) CONNECTOR 58028-01-000 (2)	LAMP ASM-MAKEUP (W/MIRROR) 3 BULB GUSTOFSON
LMU3-2	LAMP 138116-01-CHT SCREW (SUPPLIED) BULB 123918-01-000 (3) CONNECTOR 58028-01-000 (2)	LAMP ASM-MAKEUP (W/O MIRROR) 3 BULB GUSTOFSON
LMU3-3	LAMP 162446-01-CHT SCREW (SUPPLIED) BULB 123918-01-000 (3) CONNECTOR 58028-01-000 (2)	LAMP ASM-MAKEUP (W/O MIRROR) 3 BULB GUSTOFSON
LMU4-1	LAMP 110235-02-CHT SCREW G11-08-16U (2) CONNECTOR 58028-01-000 (2)	LAMP ASM-MAKEUP (W/O MIRROR) 4 BULB PROGRESSIVE DYNAMICS
LMU4-2	LAMP 138116-02-CHT SCREW (SUPPLIED) BULB 123918-01-000 (4) CONNECTOR 58028-01-000 (2)	LAMP ASM-MAKEUP (W/O MIRROR) 4 BULB GUSTOFSON
LMU4-3	LAMP 162446-02-CHT SCREW (SUPPLIED) BULB 123918-01-000 (4) CONNECTOR 58028-01-000 (2)	LAMP ASM-MAKEUP (W/O MIRROR) 4 BULB GUSTOFSON
LMM4-2	LAMP 123774-01-CHT SCREW G11-08-16U (2) BULB 123918-01-000 (4) CONNECTOR 58028-01-000 (2)	LAMP ASM-MAKEUP (W/MIRROR) 4 BULB GUSTOFSON

LAMP ASM-PACKAGE,OTHER

NO	PART NUMBER	DESCRIPTION
LSH-1	LAMP 121935-01-CHT SCREW G11-08-16U (4) CONNECTOR 58028-01-000 (2)	LAMP ASM-SHOWER PROGRESSIVE DYNAMICS INC.
LSH-2	LAMP 164039-01-CHT SCREW G11-08-16U (3) CONNECTOR 58028-01-000 (2)	LIGHT-DOME,SHOWER
LSH-3	LAMP 164040-01-CHT SCREW G13-07-12U (3) CONNECTOR 58028-01-000 (2)	LIGHT-DOME,SHOWER GLASS
LCR-1	LAMP 61424-01-000 SCREW G11-08-12U (4) CONNECTOR 58028-01-000 (2)	LAMP ASM-COURTESY,AISLE RAMCO (RECTANGULAR)
LCS-1	LAMP 108354-01-CHT SCREW G11-08-12U (4) CONNECTOR 58028-01-000 (2)	LAMP ASM-COURTESY,AISLE ITC MARINE (SQUARE)
READ-1	LIGHT-READING 132427-01-CHT SCREW SUPPLIED W/ LIGHT CLIP-U 141395-02-CHT (2) CONNECTOR 58028-01-000 (2)	LIGHT-READING,SWIVEL,ROUND 1 BULB
READ-2	LIGHT-READING 128786-02-CHT SCREW G11-08-16J (2) BULB 123917-01-000 CONNECTOR 58028-01-000 (2)	LIGHT,READING,SWIVEL

LEGEND

PART NUMBER — XXXX
QUANTITY — XX

PART NUMBER — XXXXXX
QUANTITY — XX

FIRST USED	96 MH'S
	DO NOT SCALE DRAWING
TITLE:	PART LISTING-ELECTRICAL
SHEET 4	PART NO 121339 REV

DWG NO 121339

ANTENNA ASM-PACKAGE

NO	PART NUMBER	DESCRIPTION
ANT-1	ANTENNA 76319-24-000 HARDWARE-INTERIOR 76319-25-000 BUMPER 69726-02-000 (2) CLIP 80734-02-000	ROOF MOUNT TV ANTENNA ASM 25.5" MAST 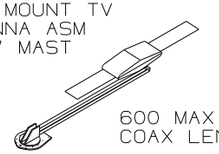 600 MAX COAX LENGTH
ANT-2	ANTENNA 76319-23-000 HARDWARE-INTERIOR 76319-25-000 BUMPER 69726-02-000 (2) ADAPTER SUPPLIED W/ANTENNA	ROOF MOUNT TV ANTENNA ASM 44.5" MAST 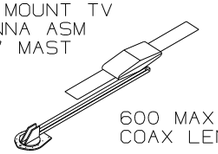 600 MAX COAX LENGTH
ANT-2W	ANTENNA 76319-23-000 HARDWARE-INTERIOR 76319-25-000 BUMPER 69726-02-000 (2) ADAPTER SUPPLIED W/ANTENNA WEDGE 76319-26-000	ROOF MOUNT TV ANTENNA ASM 44.5" MAST 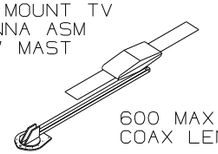 600 MAX COAX LENGTH
ANTA-1	ANTENNA 158270-01-CHT BUMPER 69726-02-000 (2) ADAPTER SUPPLIED W/ANTENNA	ROOF MOUNT TV ANTENNA ASM AUTOMATIC 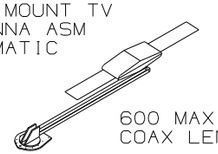 600 MAX COAX LENGTH
ANT-3	ANTENNA-TV ROOF MNT,ROUND 132935-01-000 PLATE-ROOF, CABLE ENTRY 146488-01-000 SCREW G67-10-129 (10) CABLE ASM-COAX 87105-01-006 ADAPTER 82134-01-000	ROOF MOUNT OMNI- DIRECTIONAL ANTENNA MOUNTING SCREWS SUPPLIED WITH ANTENNA 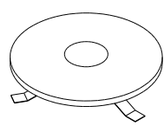

SENSORS

NO	PART NUMBER	DESCRIPTION
LPGD	LP GAS DETECTOR 150138-01-CHT SCREW G68-06-10U (2)	DETECTOR-LP GAS 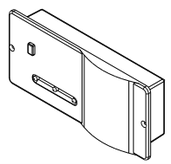

PANELS

NO	PART NUMBER	DESCRIPTION
SOLAR	PANEL-SOLAR 10 WATT 151647-01-000 SCREW G11-08-12U (4)	SOLAR PANEL 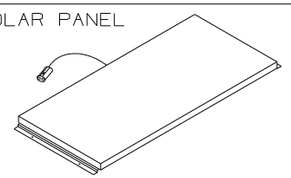

ANTENNA ASM-PACKAGE

ANTEXT-1	CABLE ASM-EXTENS 77069-02-000	RADIO ANTENNA CABLE EXTENSION 2400MM USABLE LENGTH 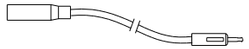
ANTKIT-1	ADAPTER-PLATE 76319-06-000 SCREW G11-08-08T (6) CLIP-WIRE 80734-02-000 SCREW G11-08-08T	PLATE ASM-ADAPTERS CABLE ROOF MOUNTING PLATE W/ CABLE-CABLE ADAPTER, FITTINGS, AND CABLE RETAINING CLIP 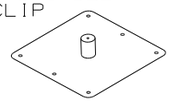
ANT-R	ANTENNA-RADIO 90944-01-000 EXTENDER-SHAFT ANTENNA 109889-04-000 BRACKET-ANTENNA GROUND 147741-01-CHT	ROOF MOUNT RADIO ANTENNA 
ANTEXT-2	CABLE ASM-EXTENS 77069-03-000	RADIO ANTENNA CABLE EXTENSION 6600 MM USABLE LENGTH

SATELLITE DISH INSTL

NO	PART NUMBER	DESCRIPTION
DM-1	SATELLITE DISH 137135-02-000 SCREW G67-10-12B (8) PLATE & BRACKET (SUPPLIED) SCREW G67-10-12B (10)	SATELLITE DISH ANTENNA ASM MANUAL SETUP 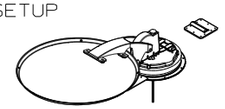
DA-1	SATELLITE DISH 163598-01-CHT PLATE-ROOF,CABLE ENTRY QUAD 146488-03-000 SCREW G67-10-12U (8) (FOR PLATE) SCREW G39-10-12U (12) (FOR SATELLITE DISH)	SATELLITE DISH ANTENNA ASM AUTOMATIC SETUP 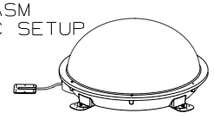
DI-1	SATELLITE DISH 154474-04-CHT SCREW G39-10-12B (12) PLATE 146488-01-000 SCREW G67-10-12B (10)	SATELLITE DISH ANTENNA ASM IN MOTION SETUP 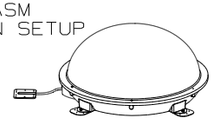

SATELLITE DISH INSTL

NO	PART NUMBER	DESCRIPTION
DA-2	SATELLITE DISH 163598-01-CHT PLATE-ROOF,CABLE ENTRY QUAD 146488-03-000 CABLE ASM-COAX 9" 163598-04-000 ADAPTOR-CABLE TO CABLE 82134-01-000 SCREW G67-10-12U (8) (FOR PLATE) SCREW G39-10-12U (12) (FOR SATELLITE DISH)	SATELLITE DISH ANTENNA ASM AUTOMATIC SETUP 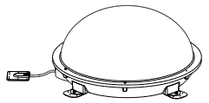
DI-2	SATELLITE DISH 154474-04-CHT PLATE-ROOF,CABLE ENTRY QUAD 146488-03-000 CABLE ASM-COAX 9" 163598-04-000 ADAPTOR-CABLE TO CABLE 82134-01-000 SCREW G67-10-12U (8) (FOR PLATE) SCREW G39-10-12U (12) (FOR SATELLITE DISH)	SATELLITE DISH ANTENNA ASM AUTOMATIC SETUP 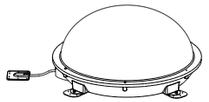
DM-2	SATELLITE DISH 137135-05-000 PLATE-ROOF,ENTRY (SUPPLIED WITH SATELLITE DISH) SCREW G67-10-12U (8) (FOR ROOF PLATE) SCREW G67-10-12U (10) (FOR SATELLITE DISH)	SATELLITE DISH ANTENNA ASM MANUAL SETUP 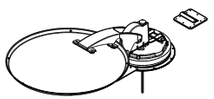

LEGEND

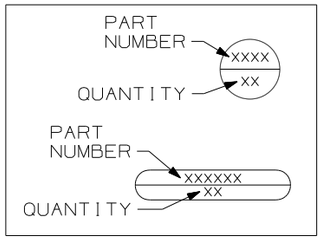

FIRST USED	96 MH'S
DO NOT SCALE DRAWING	
TITLE:	PART LISTING-ELECTRICAL
SHEET 5	PART NO 121339 REV

DWG NO 121339

RECEPTACLE PACKAGE-GFI

NO	PART NUMBER	DESCRIPTION
GFI US	RECEPTACLE 163319-01-CHT BOX 91910-02-000 WIRE-BONDING 133678-03-000 SCREW G13-07-12B (4) CONNECTOR 8313-01-000 TUBING-VINYL 8041-02-000 (300MM) 1	GFI RECEPTACLE WITH COVER AND BOX FOR US APPLICATION 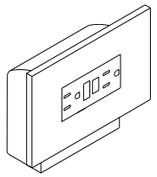
GFI CAN	RECEPTACLE 163319-01-CHT BOX 91910-01-000 WIRE-BONDING 133678-03-000 SCREW G13-07-12B (4) CONNECTOR 8313-01-000 TUBING-VINYL 8041-02-000 (300MM) 1	GFI RECEPTACLE WITH COVER AND BOX FOR CANADA APPLICATION 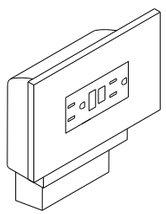

RECEPTACLE PACKAGE-GFI

NO	PART NUMBER	DESCRIPTION
GFI-1 US	RECEPTACLE 163319-01-CHT BOX 133070-01-000 WIRE-BONDING 133678-03-000 SCREW G13-07-12B (4) CONNECTOR 8313-01-000 TUBING-VINYL 8041-02-000 (300MM) 1	GFI RECEPTACLE WITH COVER AND BOX FOR US APPLICATION 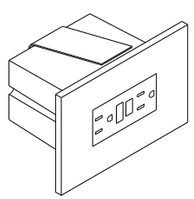
GFI-1 CAN	RECEPTACLE 163319-01-CHT BOX 133070-02-000 WIRE-BONDING 133678-03-000 SCREW G13-07-12B (4) CONNECTOR 8313-01-000 TUBING-VINYL 8041-02-000 (300MM) 1	GFI RECEPTACLE WITH COVER AND BOX FOR CANADA APPLICATION 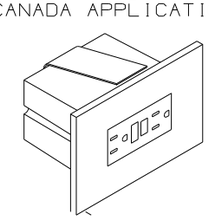

SPACERS

NO	PART NUMBER	DESCRIPTION
SP-01	SPACER 102568-01-XXX	STANDARD 110V RECEPTACLE SPACER (WOOD,VYL RAP,OG) 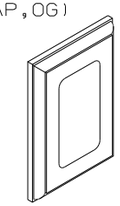
SP-02	SPACER 102568-02-XXX	WOOD SPACER FOR CEILING MOUNTED A/C PREP BOX (US) (WOOD,VYL RAP,OG) 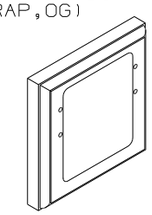
SP-03	SPACER 102568-03-XXX	WOOD SPACER FOR CEILING MOUNTED A/C PREP BOX (CANADA) (WOOD,VYL RAP,OG) 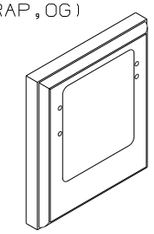
SP-04	SPACER 133713-01-CHT	STANDARD 110V RECEPTACLE SPACER (WOOD,VYL RAP,BEV) 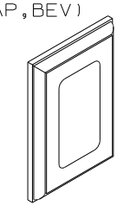
SP-05	SPACER 133713-20-XXX	STANDARD 110V RECEPTACLE SPACER (WOOD,BEV) 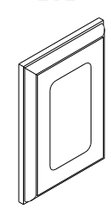
SP-21	SPACER 126052-01-XXX	WOOD SPACER FOR 1 - 110V RECEPTACLE AND 1 - REAR TV (12V) JACK (WOOD,BEV) 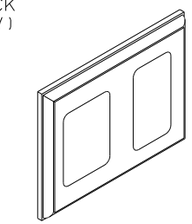

LEGEND

MISC.	SPACER
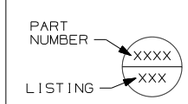	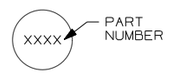

1 APPLY TUBING TO BARE GROUND WIRES.

NOTES:

FIRST USED	96 MH'S
DO NOT SCALE DRAWING	
TITLE:	PART LISTING-ELECTRICAL
SHEET 6	PART NO 121339 REV

DWG NO 121339

PREP-A/C,RECESSED (W/OUT FACTORY A/C)

NO	PART NUMBER	DESCRIPTION
PREP A/C-US	BOX 91910-02-000 COVER 84099-02-CHT LABEL 91243-01-000 SCREW G13-07-12B (4) CONNECTOR 8313-01-000 (3)	BOX AND EQUIPMENT USED FOR A/C PREP (W/OUT FACTORY A/C). US APPLICATION (RECESSED IN ROOF) 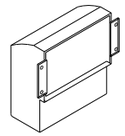
PREP A/C-CAN	BOX 91910-01-000 COVER 84099-02-CHT LABEL 91243-01-000 SCREW G13-07-12B (4) CONNECTOR 8313-01-000 (3)	BOX AND EQUIPMENT USED FOR A/C PREP (W/OUT FACTORY A/C). CANADA APPLICATION (RECESSED IN ROOF) 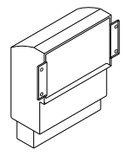

CONNECTION BOX-POWER CORD

NO	PART NUMBER	DESCRIPTION
J-PC 30 J-PC 30-US J-PC 30-CA	BOX 8289-01-000 COVER 8294-01-000 SCREW G67-10-10B (2) WIRE ASM-GROUND 133678-02-000 CONNECTOR 8314-01-000 (3) SCREW-GRND 103291-01-000 CONNECTOR 8356-02-000 CONNECTOR (PC) 8355-01-000	CONNECTION BOX IN POWER CORD COMPT FOR POWER CORD (US & CA APPLICATION) 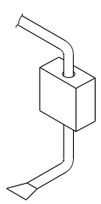

CONNECTION BOX-GENERATOR RECEPTACLE

NO	PART NUMBER	DESCRIPTION
J-RCP 30 J-RCP 30-US J-RCP 30-CA	BOX 8289-01-000 RECEPTACLE 24924-02-000 COVER 69238-01-000 SCREW G67-10-10B (2) WIRE ASM-GROUND 133678-02-000 133678-04-000 SCREW-GRND 103291-01-000 CONNECTOR 8314-01-000 TUBING-VINYL 8041-02-000 △1 (150MM)	CONNECTION BOX IN POWER CORD COMPT FOR THE GENERATOR RECEPTACLE (US & CA APPLICATION) 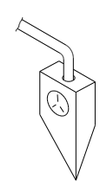

CONNECTION BOX, GENERATOR SERVICE FEED

NO	PART NUMBER	DESCRIPTION
J-GEN 30 J-GEN 30-US J-GEN 30-CA	BOX 8289-01-000 COVER 8294-01-000 SCREW G67-10-10B (2) WIRE ASM-GROUND 133678-02-000 WIRE NUT-GREY 8314-01-000 (3) SCREW-GRND 103291-01-000 CONNECTOR-WIRE 8356-01-000	BOX AND EQUIPMENT USED FOR CONNECTING THE GENERATOR LEADS TO THE SERVICE ENTRANCE WIRES (US & CA APPLICATION) 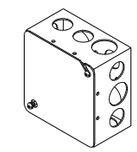

PREP-A/C,SURFACE (W/OUT FACTORY A/C)

NO	PART NUMBER	DESCRIPTION
PREP SURF	BOX 93603-01-000 COVER 53337-01-000 LABEL 91243-01-000 SCREW-GRND 103291-01-000 WIRE-BONDING 8019-01-000 SCREW G11-08-12B (2) TERMINAL 8328-01-000 CONNECTOR 8313-01-000 (2) CONNECTOR 8311-01-000	SURFACE MOUNT, US AND CANADA, BOX AND EQUIPMENT FOR A/C PREP (W/OUT FACTORY A/C). TYPICALLY LOCATED ON OVERHEAD CABINET INNER WALL OR ON CEILING. 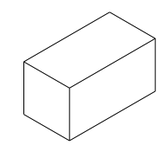

LEGEND

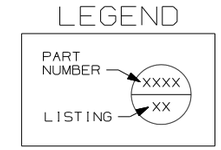

△1 APPLY TUBING TO BARE GROUND WIRES.

NOTES:

FIRST USED	96 MH'S
DO NOT SCALE DRAWING	
TITLE:	PART LISTING-ELECTRICAL
SHEET 7	PART NO 121339 REV

WIRE IDENTIFICATION CHART

CODE/COLOR	FROM:	TO:
A 14 YEL	GALLEY CEILING LAMP SWITCH	GALLEY CEILING LAMP
B 12 YEL	OVERCURRENT PROTECTION (30A BREAKER TYPICAL)	POWER PASSENGER SEAT ("BUDDY SEAT")
C 12 WHT	POWER PASSENGER SEAT	GROUND
D 14 YEL	SHOWER OVHD LAMP SWITCH SEE WIRE PF, START OF 97	SHOWER OVHD LAMP
E 095038-01-	PHONE INPUT JACK	REAR PHONE JACK
F 095038-01-	PHONE INPUT JACK	EXTERIOR PHONE JACK
G 12/ 10 YEL	OVERCURRENT PROTECTION (30A BREAKER TYPICAL)	HIGH SPEED HEATER FAN (USE 10 IF OVER 6' RUN)
H 095038-01-	PHONE INPUT JACK	FRONT PHONE JACK
J 6 BLK	OVERCURRENT PROTECTION (45 OR 55A BREAKER TYP)	COACH 12V PANEL/ CONVERTER BATTERY CHARGE
K 6 BLK	OVERCURRENT PROTECTION (45 OR 55A BREAKER TYP)	COACH 12V PANEL
L 6 GRN	CONVERTER 45 OR 55 AMP	GROUND
M 6 BLK	OVERCURRENT PROTECTION (45 OR 50A BREAKER)	CONVERTER BATTERY CHARGE
N 10 WHT	REFRIGERATOR	GROUND
P 10YEL(BLK)	OVERCURRENT PROTECTION (20A FUSE TYPICAL)	REFRIGERATOR (3 WAY)
R 8 GRN	REFRIGERATOR CHASSIS	GROUND
S 8 OR 6 GRN	GROUND BAR (LEFT SIDE)	CHASSIS GROUND
T 8 OR 6 GRN	GROUND BAR (RIGHT SIDE)	CHASSIS GROUND
U 6 GRN	CONVERTER CHASSIS	GROUND
W 8 GRN	- GROUND STUD	- GROUND STUD

WIRE IDENTIFICATION CHART

CODE/COLOR	FROM:	TO:
X 14 YEL	- CHASSIS BRAKE LAMP CIRCUIT	- CENTER MOUNT BRAKE LAMP
Y 16 YEL	VOLUME CONTROL	RADIO/TV SPEAKER
Z 6 BLK	OVERCURRENT PROTECTION (45 OR 55A BREAKER TYP)	COACH 12V PANEL
AA 16 WHT	SERVICE ENGINE SOON LAMP	VEHICLE SERVICE ENGINE SOON LAMP CIRCUIT
AB 16 WHT	WATER TANK LEVEL SENSORS	GROUND
AC 16 WHT	MAIN HOLDING TANK SENSORS (BLACK WATER)	GROUND
AD 16 WHT	AUXILIARY HOLDING TANK #1 (GRAY WATER)	GROUND
AE 16 WHT	AUXILIARY HOLDING TANK #2 (GRAY WATER)	GROUND
AF 12 YEL	WATER PUMP SWITCH #1	MONITOR PANEL WATER PUMP SWITCH
AG 12 YEL	WATER PUMP SWITCH #1	MONITOR PANEL WATER PUMP SWITCH
AH 14 YEL	OVERCURRENT PROTECTION (10A FUSE TYPICAL)	BRAKE LAMP SWITCH WARNING LAMP (IGNITION RUN/START FED)
AJ 12 WHT	CHASSIS GROUND	BODY GROUND
AK 12 WHT	CHASSIS GROUND	BODY GROUND
AL 12 YEL	HEATER CONTROL (LOW SPEED)	BLOWER MOTOR (LOW SPEED)
AM 12YEL(WHT)	HEATER CONTROL (MEDIUM/LOW SPEED)	BLOWER MOTOR (MEDIUM/LOW SPEED)
AN 12 YEL	HEATER CONTROL (MEDIUM/HIGH SPEED)	BLOWER MOTOR (MEDIUM/HIGH SPEED)
AP 14 YEL	IGNITION SWITCH ACCESSORY FEED	OVERCURRENT PROTECTION (15A FUSE TYPICAL)
AR 14 WHT	HORN, FOG LAMPS	GROUND
AS 18 WHT	DASH RADIO	RIGHT FRONT SPEAKER (NEGATIVE)

WIRE IDENTIFICATION CHART

CODE/COLOR	FROM:	TO:
AT 18 WHT	DASH RADIO	LEFT FRONT SPEAKER (NEGATIVE)
AU 16 YEL	OVERCURRENT PROTECTION (15A BREAKER TYPICAL)	FRONT CARGO LAMP SWITCH (IGNITION ACCESSORY FED)
AW 16 YEL	FRONT CARGO LAMP SWITCH	REAR CARGO LAMP SWITCH
AX 16 YEL	FRONT CARGO LAMP SWITCH	REAR CARGO LAMP SWITCH
AY 16 YEL	REAR CARGO LAMP SWITCH	CARGO LAMPS
BA 14 WHT	WINDSHIELD WIPER MOTOR	GROUND
BB 16 YEL	OVERCURRENT PROTECTION (6A BREAKER TYPICAL)	INSTRUMENT PANEL GAUGES (IGNITION ACCESSORY FED)
BC 14 WHT	INDICATOR LAMPS	GROUND
BD 14 YEL	OVERCURRENT PROTECTION (10A FUSE TYPICAL)	BRAKE LAMP SWITCH
BE 12 WHT	BLOWER MOTOR	GROUND
BF 14 WHT	WASHER BOTTLE PUMP/HORN	GROUND
BG 14 YEL	FUEL SENDER	FUEL GAUGE
BH 14 YEL	RUN ONLY POWER RELAY	ENGINE WIRING
BJ 16 YEL	OVERCURRENT PROTECTION (10A FUSE TYPICAL)	ENGINE WIRING (IGNITION RUN/START FED)
BK 14 YEL	OVERCURRENT PROTECTION (10A FUSE TYPICAL)	HORN RELAY FEED
BL 16 WHT	CIGAR LIGHTER	GROUND
BM 16 YEL	CHASSIS BATTERY POWER	CIGAR LIGHTER
BN 16 YEL	ACCESSORY POWER	SPOTLAMP
BP 14 WHT	POWER MIRROR	GROUND

WIRE IDENTIFICATION CHART

CODE/COLOR	FROM:	TO:
BR 14 YEL	POWER MIRROR (RIGHT SIDE)	POWER MIRROR CONTROL SWITCH
BS 14 YEL	POWER MIRROR HEAT SWITCH	POWER MIRRORS
BT 14 YEL	POWER MIRROR (LEFT SIDE)	POWER MIRROR CONTROL SWITCH
BU 14 YEL	RUN ONLY POWER	POWER MIRROR HEAT/ CONTROL SWITCHES
BW 12 YEL	IGNITION SWITCH	ACCESSORY CIRCUIT FEED
BX 12YEL(ORN)	IGNITION SWITCH RUN ONLY SOURCE	GENERAL(TURN, BACK UP,DASH IGNITION CIRCUIT,ETC)
BY 12YEL/8BLK	OVERCURRENT PROTECTION (16GA FUSELINK)(8GA PASSTHRU)	CHASSIS BATTERY SOURCE(AUTO AC BLOWER,POWER DRIVER SEAT,ETC)
CA 12 YEL	OVERCURRENT PROTECTION (16GA FUSELINK TYPICAL)	CHASSIS BATTERY SOURCE
CB 12 YEL	IGNITION SWITCH START SOURCE	START CIRCUIT SOURCE
CC 16 YEL	ALTERNATOR	ALTERNATOR WARNING LAMP
CD 16 YEL	OIL PRESSURE WARNING SENDER	OIL PRESSURE WARNING LAMP
CE 16 YEL	WATER TEMPERATURE WARNING SENDER	WATER TEMPERATURE WARNING LAMP
CF 14 YEL	REAR TV JACK	POWER FEED SWITCH
CG 14 YEL	CLUTCH/NEUTRAL SWITCH	START ISOLATION RELAY
CH 14 YEL	START RELAY	ENGINE WIRING
CJ 14 YEL	WINDSHIELD WIPER/WASHER CONTROL SWITCH	WINDSHIELD WASHER PUMP
CK 16 YEL	TELEVISION	SPEAKER (POSITIVE)
CL 16 WHT	TELEVISION	SPEAKER (NEGATIVE)
CM 10 YEL	OVERCURRENT PROTECTION (15A BREAKER TYPICAL)	INVERTER FEED

WIRE IDENTIFICATION CHART

CODE/COLOR	FROM:	TO:
CN 10 WHT	INVERTER	GROUND
CP 12 WHT	INVERTER CHASSIS	GROUND
CR 16 WHT	VEHICLE CHECK ENGINE LAMP CIRCUIT	CHECK ENGINE LAMP
CS 16 WHT	REMOTE THERMOSTAT (RC TERM/ORG EXPORT AIR)	GROUND
CT 16 YEL	DAYTIME RUNNING LAMP MODULE OUTPUT(PIN 30)	LOW BEAM HEADLAMP CIRCUIT
CU 16 YEL	DAYTIME RUNNING LAMP MODULE ENABLE(PIN 85)	RUN/START CIRCUIT
CW 14 YEL	DAYTIME RUNNING LAMP MODULE POWER(PIN 87A)	CHASSIS BATTERY POWER
CX 16 WHT	DAYTIME RUNNING LAMP MODULE GROUND(PIN 87)	GROUND
CY 16 YEL	DAYTIME RUNNING LAMP MODULE HIGH BEAM DISABLE(PIN 86)	HIGH BEAM HEADLAMP CIRCUIT
DA 12 YEL	SHOWER SUMP SYSTEM PUMP SWITCH	SHOWER SUMP SYSTEM PUMP
DB 12 WHT	SHOWER SUMP SYSTEM PUMP	GROUND
DC 16 YEL	REAR ROOF AIR CONDITIONER EXHAUST CIRCUIT	THERMOSTAT
DD 16 YEL	REAR ROOF AIR CONDITIONER COOL CIRCUIT	THERMOSTAT (Y TERM-EXPORT AIR/YEL)
DE 16 YEL	REAR ROOF AIR CONDITIONER HIGH SPEED FAN CIRCUIT	THERMOSTAT (H TERM-EXPORT AIR/BLU)
DF 16 YEL	REAR ROOF AIR CONDITIONER LOW SPEED FAN CIRCUIT	THERMOSTAT (G TERM-EXPORT AIR/RED)
DG 12YEL(GRY)	IGNITION SWITCH	ACCESSORY/RUN FEED
DH 14 YEL	EMERGENCY SHUTDOWN GAUGE	FUEL SOLENOID (DIESEL ENGINE)
DJ 16 YEL	TV/RADIO SPEAKER SWITCHING RELAY OUTPUT	LEFT REAR SPEAKER POSITIVE
DK 16 WHT	TV/RADIO SPEAKER SWITCHING RELAY OUTPUT	LEFT REAR SPEAKER NEGATIVE

WIRE IDENTIFICATION CHART

CODE/COLOR	FROM:	TO:
DL 16 YEL	TV/RADIO SPEAKER SWITCHING RELAY OUTPUT	RIGHT REAR SPEAKER POSITIVE
DM 16 WHT	TV/RADIO SPEAKER SWITCHING RELAY OUTPUT	RIGHT REAR SPEAKER NEGATIVE
DN 10 YEL	BATTERY DISCONNECT RELAY	CIRCUIT BREAKER SLIDEOUT ROOM CIRCUIT BRKR
DP 14 YEL	TV/RADIO SPEAKER FEED SELECT SWITCH	TV/RADIO SPEAKER SWITCHING RELAY COIL INPUT OR AMPLIFIER
DR 16 YEL	HWH WIRING OR KWIKEE FRONT SLIDE MODULE	SLIDEOUT SWITCH (ROOM ONE EXTEND)
DS 16 WHT	CONTROL MODULE (FRONT SLIDE)(GROUND)	SLIDEOUT SWITCH (FRONT SLIDEOUT)
DT 16 YEL	SLIDEOUT ROOM RELAY (PIN 30)	SLIDEOUT ROOM CONTROL SWITCH
DU 16 YEL	HWH WIRING OR KWIKEE FRONT SLIDE MODULE	SLIDEOUT SWITCH (ROOM ONE RETRACT)
DW 16 WHT	SLIDEOUT ROOM SWITCH (G) (SWITCHED GROUND TO PUMP)	HWH WIRING (SWITCHED GROUND TO PUMP)
DX 16 WHT	HWH WIRING (G) (GROUND)	SLIDEOUT ROOM SWITCH (GROUND)
DY 16 WHT	HWH WIRING (G) (JACK SENSE; SWITCHED GROUND)	SLIDEOUT ROOM RELAY (JACK SENSE; SWITCHED GROUND)
EA 16 YEL	HWH WIRING (G) (ACCESSORY POWER)	SLIDEOUT ROOM RELAY (ACCESSORY POWER)
EB 16 YEL	SLIDEOUT ROOM RELAY (G) (SWITCHED ACCESSORY POWER)	FRT/RR SLIDEOUT ROOM SWITCH (SWITCHED EXTEND/RETRACT PWR)
EC 10 YEL	CHASSIS BATTERY POWER SOURCE (BATTERY MODE SOLENOID POST)	THRU FUSE TO AMP SOURCE SELECT RELAY(PIN 87)(OPTION 21V,95 Q)
ED 10 YEL	COACH BATTERY POWER SOURCE (BATTERY MODE SOLENOID POST)	THRU FUSE TO AMP SOURCE SELECT RELAY(PIN 87A)(OPTION 21V,95Q)
EE 16 YEL	AIR RIDE SUSPENSION LEFT DOWN SWITCH POSITION	AIR RIDE SUSPENSION LEFT HEIGHT CONTROL BOX
EF 16 YEL	AIR RIDE SUSPENSION LEFT UP SWITCH POSITION	AIR RIDE SUSPENSION LEFT HEIGHT CONTROL BOX
EG 16 WHT	AIR RIDE SUSPENSION WIRE ASM GROUND	AIR RIDE SUSPENSION CONTROL LAMP GROUNDS
EH 16 YEL	AIR RIDE SUSPENSION RIGHT DOWN SWITCH POSITION	AIR RIDE SUSPENSION RIGHT HEIGHT CONTROL BOX

WIRE IDENTIFICATION CHART

CODE/COLOR	FROM:	TO:
EJ 16 YEL	AIR RIDE SUSPENSION RIGHT UP SWITCH POSITION	AIR RIDE SUSPENSION RIGHT HEIGHT CONTROL BOX
EK 16 YEL	AIR RIDE SUSPENSION AUTO MODE SWITCH POSITION	AIR RIDE SUSPENSION HEIGHT CONTROL BOXES
EL 16 YEL	RUN ONLY POWER	AIR RIDE SUSPENSION AUTO/MANUAL MODE SWITCH
EM 16 YEL	AIR RIDE SUSPENSION COMPRESSOR	COMPRESSOR ON WARNING LAMP
EN 16 YEL	AIR RIDE SUSPENSION MANUAL MODE SWITCH POSITION	LEVEL CONTROL SWITCHES AND INDICATOR LAMP
EP 14 YEL	OVERCURRENT PROTECTION (15A BREAKER TYPICAL)	SPOTLAMP
ER 16 YEL	OVERCURRENT PROTECTION (6A BREAKER TYPICAL)	ELECTRIC STEP KILL SWITCH
ES 16 YEL	ELECTRIC STEP KILL SWITCH	ELECTRIC STEP
ET 16 YEL	OVERCURRENT PROTECTION (6A BREAKER TYPICAL)	REFRIGERATOR (2 WAY)
EU 16 WHT	REFRIGERATOR (2 WAY)	GROUND
EW 14 YEL	FUEL HEATER SWITCH	FUEL HEATER (DIESEL ENGINE)
EX 14 YEL	TELEVISION POWER SWITCH	TELEVISION WALL PLATE
EY 12YELLTBLU	OVERCURRENT PROTECTION (16GA FUSELINK TYPICAL)	IGNITION SWITCH FEED #2
FA 14 YEL	DRIVER'S DOOR PASSENGER SIDE POWER WINDOW SWITCH(DOWN,PIN2)	PASSENGER'S POWER WINDOW SWITCH(PIN 2)
FB 14 YEL	DRIVER'S DOOR PASSENGER SIDE POWER WINDOW SWITCH(UP,PIN 4)	PASSENGER'S POWER WINDOW SWITCH(PIN 4)
FC 14 YEL	PASSENGER'S DOOR POWER WINDOW SWITCH(DOWN,PIN 1)	PASSENGER'S DOOR POWER WINDOW MOTOR(DOWN)
FD 14 YEL	PASSENGER'S DOOR POWER WINDOW SWITCH(UP,PIN 5)	PASSENGER'S DOOR POWER WINDOW MOTOR(UP)
FG 10 YEL	AMPLIFIER POWER SOURCE SELECT RELAY (PIN 30)	AMPLIFIER POWER FEED (DELUXE SOUND SYSTEM,95 LUXOR)
FH 10 WHT	AMPLIFIER (DELUXE SOUND SYSTEM,95 LUXOR)	GROUND

WIRE IDENTIFICATION CHART

CODE/COLOR	FROM:	TO:
FJ 12 YEL	WATER PUMP SWITCH #2 (THREE SWITCH SYSTEM)	WATER PUMP SWITCH #1 (THREE SWITCH SYSTEM)
FK 12 YEL	WATER PUMP SWITCH #2 (THREE SWITCH SYSTEM)	WATER PUMP SWITCH #1 (THREE SWITCH SYSTEM)
FL 14 YEL	SECOND PORCH LAMP SWITCH	SECOND PORCH LAMP
FM 14 WHT	SOLENOID MOUNTING BOLT	GROUND
FN 16 YEL	SOURCE SELECTOR SWITCH (DELUXE SOUND SYSTEM,95 LUXOR)	AMP & EQUALIZER REMOTE TRIGGER (DELUXE SOUND SYSTEM,95 LUXOR)
FP 16 YEL	EXHAUST BRAKE SWITCH (DIESEL PUSHER CHASSIS)	CHASSIS EXHAUST BRAKE HARNESS & BRAKE ON DASH INDICATOR LAMP
FR 14 YEL	FORD RUN/ACCESSORY IGNITON CIRCUIT(WHT/PUR,10A FUSED)	DOCKING LAMPS, RELAY TRIGGER, REAR MONITOR CAMERA FEED
FS 14 YEL	DOCKING LAMPS RELAY(PIN 87)	DOCKING LAMPS
FT 14 WHT	DOCKING LAMPS	GROUND
FU 14 YEL	AUTOMOTIVE AIR WIRING	FORD A/C COMPRESSOR CLUTCH SWITCH CIRCUIT
FW 14 YEL	DOCKING LAMPS SWITCH	DOCKING LAMPS RELAY(PIN 30)
FX 12 YEL	OVERCURRENT PROTECTION (30A BRKR OR FUSE)	POWER DRIVER SEAT (I.E.,6 WAY)
FY 12 WHT	POWER DRIVER SEAT (I.E.,6 WAY)	GROUND
GA 14 YEL	WATER SYSTEM WINTERIZATION SWITCH	WINTERIZATION VALVE
GB 14 YEL	WATER HEATER BYPASS SWITCH	WATER HEATER BYPASS VALVE
GC 16 YEL	SLIDEOUT ROOM SPDT SWITCH (M) (SWITCHED WIRE)	HWH WIRING (SWITCHED WIRE)
GD 16 YEL	WIPER CONTROL MODULE	WIPER MOTOR (S TERMINAL)
GE 16 YEL	SWITCHED DOME LAMP FEED	DOME LAMP
GF 16 WHT	COMMON REAR CHANNEL SPEAKER RETURN	REAR SPEAKERS

WIRE IDENTIFICATION CHART

CODE/COLOR	FROM:	TO:
GG 16 YEL	RADIO REMOTE TRIGGER (DELUXE SOUND OPTION)	SOURCE SELECTOR SWITCH (LUXOR)
GH 14 WHT	GLOW PLUG WAIT LAMP (DIESEL ENGINE)	ENGINE SENDER
GJ 16 YEL	COACH BATTERY POWER (UPSTREAM OF DISCONNECT)	LP DETECTOR AND/OR SOLAR PANEL WIRING OVERCURRENT PROTECTION
GK 14 YEL	AIR HORN SWITCH	CHASSIS HORN
GL 16 WHT	WATER/HOLDING TANKS LEVEL SENSORS	GROUND
GM 16 YEL	JET AIR RIDE SUSPENSION PRESSURE SENSORS	CHECK REAR AIR SUSPENSION DASH WARNING LAMP
GN 16 YEL	REAR TV SPEAKER OUTPUT (POSITIVE)	REAR TV SPEAKER (POSITIVE)
GP 16 WHT	REAR TV SPEAKER OUTPUT (NEGATIVE)	REAR TV SPEAKER (NEGATIVE)
GR 14 YEL	THERMOSTATICALLY CONTROLLED ROOF VENT (SEND)	THERMOSTAT (RETURN)
GS 14 YEL	THERMOSTATICALLY CONTROLLED ROOF VENT (RETURN)	THERMOSTAT (RETURN)
GT 16 YEL	RADIO POWER SWITCH (MEMORY FEED)	RADIO (MEMORY FEED)
GU 16 YEL	DEFOG MODULE OUTPUT	DEFOG RELAY, INDICATOR LAMP
GW 16 WHT	DEFOG SWITCH ON/OFF	DEFOG MODULE ON/OFF
GX 16/12 WHT	STEP COVER SWITCH (REF AAA-16/KA-12)	GROUND
GY 12 YEL	DEFOG RELAY	DEFOG UNIT
HA 14 YEL	READING LAMPS SWITCH (93 VANS)	READING LAMPS
HB 14 YEL	"MOOD" LAMPS SWITCH (93 VANS)	"MOOD" LAMPS
HC 14 YEL	12V POWER SOURCE (93 VANS)	OVERCURRENT PROTECTION (15A FUSE TYPICAL)
HD 14 YEL	SOFA SLIDE MOTOR POSITIVE (94 VANS)	SOFA MONOPLEX CONTROLLER

WIRE IDENTIFICATION CHART

CODE/COLOR	FROM:	TO:
HE 14 WHT	SOFA SLIDE MOTOR NEGATIVE (94 VANS)	SOFA MONOPLEX CONTROLLER
HF 14 YEL	SOFA RECLINE MOTOR POSITIVE (94 VANS)	SOFA MONOPLEX CONTROLLER
HG 14 WHT	SOFA RECLINE MOTOR NEGATIVE (94 VANS)	SOFA MONOPLEX CONTROLLER
HH 16 YEL	SOFA MONOPLEX SWITCH (94 VANS)	SOFA MONOPLEX CONTROLLER
HJ 16 WHT	SOFA MONOPLEX SWITCH (94 VANS)	GROUND
HK 14 WHT	SOFA MONOPLEX CONTROLLER (94 VANS)	GROUND
HL 14 YEL	FLOOD LAMP SWITCH (94 VANS)	FLOOD LAMP
HM 16 YEL	REAR TV SPEAKER OUTPUT (POSITIVE)	REAR TV SPEAKER (POSITIVE)
HN 16 WHT	REAR TV SPEAKER OUTPUT (NEGATIVE)	REAR TV SPEAKER (NEGATIVE)
HP 16 YEL	OVERCURRENT PROTECTION (94 VANS)	REAR AC
HR 14 YEL	SWITCH (94 1200 MODEL VAN)	12VOLT RECEPTACLE
HS 16 YEL	SOLAR PANEL (1HS INDICATOR TO BATTERY)	COACH BATTERY THRU OVERCURRENT PROTECTION
HT 16 WHT	SOLAR PANEL (1HT INDICATOR TO GROUND)	GROUND
HU 16 YEL	GENERATOR SWITCH (LED)	GENERATOR (POSITIVE SIGNAL)
HW 16 YEL	LICENSE PLATE LAMP FEED	LICENSE PLATE LAMP
HX 16 YEL	CHASSIS CLEARANCE LAMP CRT #2	CLEARANCE/MARKER LAMPS
HY 12 WHT	DEFOG UNIT	GROUND
JA 14 YEL	OVERCURRENT PROTECTION (15A FUSE/BREAKER TYPICAL)	WATER PUMP,MONITOR PANEL,ETC ("CLEAN CIRCUIT",REF JP)
JB 14 YEL	OVERCURRENT PROTECTION (15A FUSE/BREAKER TYPICAL)	FURNACE, ROOF VENT,ETC (REF JM)

WIRE IDENTIFICATION CHART

CODE/COLOR	FROM:	TO:
JC 14 YEL	OVERCURRENT PROTECTION (15A FUSE/BREAKER TYPICAL)	COACH LIGHTING, ETC CIRCUIT #1 (REF NC)
JD 14 YEL	OVERCURRENT PROTECTION (15A FUSE/BREAKER TYPICAL)	COACH LIGHTING, ETC CIRCUIT #2 (REF ND)
JE 14 YEL	OVERCURRENT PROTECTION (15A FUSE/BREAKER TYPICAL)	COACH LIGHTING, ETC CIRCUIT #3 (REF NE)
JF 14 YEL	OVERCURRENT PROTECTION (15A FUSE/BREAKER TYPICAL)	COACH LIGHTING, ETC CIRCUIT #4 (REF NF)
JG 14 YEL	OVERCURRENT PROTECTION (15A FUSE/BREAKER TYPICAL)	COACH LIGHTING, ETC(ALT CLEAN) CIRCUIT #5 (REF JN)
JH 14 YEL	MAIN FURNACE (12V POWER)	MAIN FURNACE THERMOSTAT
JJ 14 YEL	MAIN FURNACE (HEAT)	MAIN FURNACE THERMOSTAT
JK 14 YEL	AUXILIARY FURNACE	AUXILIARY FURNACE THERMOSTAT
JL 14 YEL	AUXILIARY FURNACE	AUXILIARY FURNACE THERMOSTAT
JM 14 WHT	MAIN FURNACE	GROUND
JN 14 WHT	COACH LIGHTING CIRCUIT #5 (REF JG)	GROUND(ALTERNATE CLEAN CIRCUIT FOR LINEAR CONVERTER)
JP 14 WHT	"CLEAN CIRCUIT" DEVICES (REF JA)	GROUND
JR 16 YEL	MONITOR PANEL	LP TANK #2 LEVEL SENSOR
JS 12 YEL	MONITOR PANEL WATER PUMP SWITCH	WATER PUMP
JT 16 YEL	MONITOR PANEL	LP TANK #1 LEVEL SENSOR
JU 14 YEL	MONITOR PANEL WATER HEATER SWITCH	WATER HEATER (BLU)
JW 14 YEL	MONITOR PANEL WATER HEATER SWITCH	WATER HEATER (BRN)
JX 14 WHT	WATER HEATER	GROUND
JY 12 WHT	WATER PUMP	GROUND

WIRE IDENTIFICATION CHART

CODE/COLOR	FROM:	TO:
KA 12 YEL	OVERCURRENT PROTECTION (25A BREAKER TYPICAL)	ELECTRIC STEP BATTERY POWER
KB 10 YEL	OVERCURRENT PROTECTION (25A BREAKER TYPICAL)	ELECTRIC STEP KILL SWITCH (OLD STEP WIRING STYLE)
KC 10 YEL	ELECTRIC STEP KILL SWITCH (OLD STEP WIRING STYLE)	ELECTRIC STEP
KD 18 WHT	ELECTRIC STEP DOOR JAMB SWITCH	ELECTRIC STEP
KE 14 YEL	RUN ONLY POWER SOURCE	GENERAL PURPOSE(RELAY TRIGGER, REAR AUTO HTR,DRL,MONITOR,ETC)
KF 16 WHT	COACH BATTERY DISCONNECT RELAY SWITCH	GROUND
KG 14 YEL	POWER LIFT VENT (BLU)	POWER LIFT SWITCH(UP)
KH 14 YEL	POWER LIFT VENT (RED)	POWER LIFT SWITCH(DOWN)
KJ 14 YEL	POWER LIFT VENT (BLK)	FAN SWITCH
KK 18 YEL	REAR STEREO	RIGHT SPEAKER (POSITIVE)
KL 18 WHT	REAR STEREO	RIGHT SPEAKER (NEGATIVE)
KM 14 YEL	POWER LIFT VENT LAMP	LAMP SWITCH
KN 18 YEL	REAR STEREO	LEFT SPEAKER (POSITIVE)
KP 18 WHT	REAR STEREO	LEFT SPEAKER (NEGATIVE)
KR 14 WHT	REAR STEREO ANTENNA	GROUND
KS 14 YEL	REAR AUTO HEATER SWITCH (HIGH SPEED)	REAR AUTO HEATER
KT 14 YEL	REAR AUTO HEATER SWITCH (MEDIUM SPEED)	REAR AUTO HEATER
KU 14 YEL	REAR AUTO HEATER SWITCH (LOW SPEED)	REAR AUTO HEATER
KW 18 YEL	DASH RADIO	RIGHT FRONT SPEAKER (POSITIVE)

WIRE IDENTIFICATION CHART

CODE/COLOR	FROM:	TO:
KX 18 YEL	DASH RADIO	RIGHT REAR SPEAKER (POSITIVE)
KY 18 YEL	DASH RADIO	LEFT FRONT SPEAKER (POSITIVE)
LA 18 YEL	DASH RADIO	LEFT REAR SPEAKER (POSITIVE)
LB 18 WHT	DASH RADIO	RIGHT REAR SPEAKER (NEGATIVE)
LC 18 WHT	DASH RADIO	LEFT REAR SPEAKER (NEGATIVE)
LD 14 YEL	IGNITION SWITCH ACCESSORY POWER SOURCE	GENERAL PURPOSE(AUX FANS,RELAY TRIGGER,ETC.)
LE 14 YEL	AUXILIARY DEFROST FANS SWITCH (HIGH SPEED)	AUXILIARY DEFROST FANS (BLK)
LF 14 YEL	AUXILIARY DEFROST FANS SWITCH (LOW SPEED)	AUXILIARY DEFROST FANS (RED)
LG 16 YEL	COACH BATTERY DISCONNECT RELAY (TERMINAL I)	COACH BATTERY DISCONNECT RELAY SWITCH
LH 16 YEL	COACH BATTERY DISCONNECT RELAY (TERMINAL S)	COACH BATTERY DISCONNECT RELAY SWITCH
LJ 16 YEL	COACH BATTERY DISCONNECT RELAY BATTERY SIDE FUSE FEED	COACH BATTERY DISCONNECT RELAY SWITCH
LK 16 YEL	COACH BATTERY DISCONNECT RELAY LOAD SIDE FUSE FEED	COACH BATTERY DISCONNECT RELAY SWITCH/INDICATOR LAMP
LL 16 WHT	GENERATOR SWITCH (START)	GENERATOR (RED)
LM 16 WHT	GENERATOR SWITCH (STOP)	GENERATOR (ORN)
LN 16 WHT	GENERATOR SWITCH/INDICATOR (GROUND)	GENERATOR (GRN)
LP 16 YEL	GENERATOR SWITCH/INDICATOR (RUN)	GENERATOR (BLU)
LR 14 YEL	BATTERY MODE SWITCH (AUX START SWITCH)	BATTERY MODE SOLENOID (AUX START SOLENOID)
LS 12 YEL	OVERCURRENT PROTECTION 20A BREAKER TYPICAL,COACH FEED	GENERAL PURPOSE(BATTERY MODE, RADIO POWER,BATTERY CONDITION)
LT 16 YEL	BATTERY CONDITION SWITCH	VOLTMETER (POWER FEED)

WIRE IDENTIFICATION CHART

CODE/COLOR	FROM:	TO:
LU 14 YEL	CHASSIS BRAKE LAMP CIRCUIT	VEHICLE BRAKES, TAG AXLE CONTROL MODULE,ETC.
LW 14 YEL	WIPER CONTROL MODULE (PARK)	WINDSHIELD WIPER MOTOR (FRONT)
LX 14 YEL	WIPER CONTROL MODULE (LOW SPEED)	WINDSHIELD WIPER MOTOR (FRONT)
LY 14 YEL	WIPER CONTROL MODULE (HIGH SPEED)	WINDSHIELD WIPER MOTOR (FRONT)
MA 14 YEL	WIPER CONTROL MODULE (WASHER BOTTLE PUMP)	WINDSHIELD WASHER BOTTLE PUMP (FRONT)
MB 14 YEL	CHASSIS WINDSHIELD WIPER FEED CIRCUIT	OVERCURRENT PROTECTION (6A BREAKER TYPICAL)
MC 16 WHT	INSTRUMENT PANEL LAMPS	GROUND
MD 14 YEL	OVERCURRENT PROTECTION (15A BREAKER TYPICAL)	REMOTE MIRROR RELAY/POWER WINDOW FEED
ME 14 YEL	OVERCURRENT PROTECTION (15A BREAKER TYPICAL)	AIR HORN RELAY FEED/ MARKER LAMPS RELAY FEED
MF 14 YEL	OVERCURRENT PROTECTION (15A BREAKER TYPICAL)	FOG LAMP RELAY FEED/ SPOT LAMP FEED
MG 14 WHT	GENERAL PURPOSE(RELAYS,DASH DEVICES,ETC.)	GROUND
MH 16 WHT	CHASSIS CHOKE LAMP INDICATOR CIRCUIT	CHOKE LAMP
MJ 14 YEL	CHASSIS WINDSHIELD WIPER FEED CIRCUIT	WIPER CONTROL MODULE (POWER FEED)
MK 14 YEL	CHASSIS BATTERY POWER FEED CIRCUIT	GENERAL PURPOSE(CIGAR LIGHTER, DOME/COURTESY LAMPS,ETC)
ML 16 YEL	CHASSIS INSTRUMENT PANEL LAMPS FEED CIRCUIT	INSTRUMENT PANEL LAMPS
MM 14 YEL	CHASSIS CLEARANCE LAMP CRT #1 (BRN TYPICAL)	CLEARANCE/MARKER LAMPS
MN 14 WHT	DOME LAMP SWITCHED GROUND	DOME LAMP SWITCH(DOOR JAMB, INSTRUMENT PANEL SWITCH,ETC)
MP 18/16 WHT	ELEC STEP DOOR JAMB SWITCH, LP TANK SENDER, ETC	GROUND
MR 14 YEL	REAR WINDOW WIPER SWITCH (LOW SPEED)	REAR WINDOW WIPER MOTOR (LOW SPEED)

WIRE IDENTIFICATION CHART

CODE/COLOR	FROM:	TO:
MS 14 WHT	CLEARANCE/MARKER LAMPS	GROUND
MT 8 WHT	ELECTRIC STEP	GROUND
MU 14 WHT	GENERAL PURPOSE(CIGAR LIGHTER, DOME LAMPS,12 V OUTLETS,ETC)	GROUND
MW 16 YEL	VEHICLE CHECK ENGINE LAMP CIRCUIT	CHECK ENGINE LAMP
MX 16 YEL	WINDSHIELD WIPER SWITCH	WIPER RELAY
MY 14 YEL	VEHICLE HEADLAMP FEED CIRCUIT	DIMMER MODULE
NA 14 YEL	VEHICLE HEADLAMP LOW BEAM CIRCUIT	DIMMER MODULE
NB 14 YEL	VEHICLE HEADLAMP HIGH BEAM CIRCUIT	DIMMER MODULE
NC 14 WHT	COACH LIGHTING CIRCUIT #1 (REF JC)	GROUND
ND 14 WHT	COACH LIGHTING CIRCUIT #2 (REF JD)	GROUND
NE 14 WHT	COACH LIGHTING CIRCUIT #3 (REF JE)	GROUND
NF 14 WHT	COACH LIGHTING CIRCUIT #4 (REF JF)	GROUND
NG 16 YEL	FOG LAMPS SWITCH	FOG LAMPS RELAY
NH 14 YEL	FOG LAMPS RELAY	FOG LAMPS
NJ 16 YEL	CHASSIS HORN FEED CIRCUIT	AIR HORN SWITCH
NK 14 YEL	AIR HORN SWITCH	AIR HORN AIR TANK AIR RELEASE VALVE
NL 14 YEL	AR HORN RELAY	AIR HORN AIR COMPRESSOR
NM 14 YEL	OVERCURRENT PROTECTION (15A FUSE TYPICAL)	COACH LIGHTING CIRCUIT #6 (REF PM)
NN 16 YEL	LEFT POWER MIRROR MOTOR (HORIZONTAL CONTROL,YEL)	POWER MIRROR CONTROL SWITCH

WIRE IDENTIFICATION CHART

CODE/COLOR	FROM:	TO:
NR 16 YEL	LEFT POWER MIRROR (VERTICAL CONTROL, WHT)	POWER MIRROR CONTROL SWITCH
NS 14 YEL	POWER MIRROR HEATER SWITCH	POWER MIRRORS (RED)
NT 14 YEL	POWER MIRROR RELAY	POWER MIRROR CONTROL SWITCH
NU 14 YEL	AISLE LAMPS SWITCH #1	AISLE LAMPS SWITCH #2
NW 14 YEL	FRONT COMPARTMENT LAMPS SWITCH	COMPARTMENT LAMPS
NX 14 YEL	INTERSTATE COMMERCE COMMITTEE COURTESY BLINK SWITCH	CLEARANCE LAMPS
NY 14 YEL	AISLE LAMPS SWITCH #1	AISLE LAMPS SWITCH #2
PA 14 WHT	REAR AUTO HEATER	GROUND
PB 14 WHT	REAR WINDOW WIPER MOTOR	GROUND
PC 14 YEL	BEDROOM CEILING LAMP SWITCH	BEDROOM CEILING LAMP
PD 14 YEL	MAKE UP LAMP #1 SWITCH	MAKE UP LAMP #1
PE 14 YEL	BATH CEILING LAMP SWITCH	BATH CEILING LAMP
PF 14 YEL	SHOWER LAMP SWITCH WIRE D WAS FIRST USED ON C'S	SHOWER LAMP
PG 14 YEL	WARDROBE LAMP SWITCH	WARDROBE LAMP
PH 14 YEL	AISLE LAMPS SWITCH	AISLE LAMPS
PJ 14 YEL	PORCH LAMP SWITCH	PORCH LAMP
PK 14 YEL	STRIP LAMP SWITCH	STRIP LAMP
PL 14 YEL	FRONT CEILING LAMP SWITCH	FRONT CEILING LAMP
PM 14 WHT	COACH LIGHTING CIRCUIT #6 (REF NM)	GROUND

WIRE IDENTIFICATION CHART

CODE/COLOR	FROM:	TO:
PN 16 WHT	RIGHT POWER MIRROR (COMMON,BLK)	POWER MIRROR CONTROL SWITCH
PP 16 YEL	RIGHT POWER MIRROR (HORIZONTAL CONTROL,YEL)	POWER MIRROR CONTROL SWITCH
PR 16 YEL	RIGHT POWER MIRROR (VERTICAL CONTROL,WHT)	POWER MIRROR CONTROL SWITCH
PS 14 YEL	MAP LAMP SWITCH	MAP LAMP
PT 14 YEL	BEVERAGE TRAY LAMP SWITCH	BEVERAGE TRAY LAMP
PU 14 YEL	DUMP LAMP SWITCH	DUMP LAMP
PW 14 YEL	OVERCURRENT PROTECTION (15A BREAKER TYPICAL)	POWER DOOR LOCK/UNLOCK RELAY (PIN 30)
PX 16 YEL	POWER DOOR LOCK SWITCH (LOCK) (PIN 1)	POWER DOOR LOCK RELAY (PIN 86)
PY 16 YEL	POWER DOOR LOCK SWITCH (UNLOCK) (PIN 5)	POWER DOOR UNLOCK RELAY (PIN 86)
RA 14 YEL	VEHICLE LEFT FRONT TURN SIGNAL CIRCUIT	LEFT FRONT TURN SIGNAL/MARKER LAMP
RB 14 YEL	VEHICLE RIGHT FRONT TURN SIGNAL CIRCUIT	RIGHT FRONT TURN SIGNAL/MARKER LAMP
RC 14 WHT	FRONT AUTOMOTIVE LAMPS(TURN, MARKER,ETC)	GROUND
RD 14 YEL	OVERCURRENT PROTECTION (15 A FUSE TYPICAL)	HAZARD FLASHER, HORN RELAY
RE 12 YEL	RADIATOR FAN RELAY#1 (COMMON)	RADIATOR FAN #1
RF 12 YEL	RADIATOR FAN RELAY #2 (COMMON)	RADIATOR FAN #2
RG 14 WHT	RADIATOR FAN THERMOSTAT SWITCH	RADIATOR FAN RELAYS (COILS,TRIGGER)
RH 12YEL(BLK)	OVERCURRENT PROTECTION (25A BREAKER TYPICAL)	RADIATOR FAN RELAY #1 (NORMALLY OPEN)
RJ 12YEL(BLK)	OVERCURRENT PROTECTION (25A BREAKER TYPICAL)	RADIATOR FAN RELAY #2 (NORMALLY OPEN)
RK 12 WHT	RADIATOR FAN #1	GROUND

WIRE IDENTIFICATION CHART

CODE/COLOR	FROM:	TO:
RL 12 WHT	RADIATOR FAN #2	GROUND
RM 14 WHT	VEHICLE IGNITION SWITCH GROUND DURING START CIRCUIT	BULB CHECK(LOW TAG AIR,PARK BRAKE,ETC)
RN 14 YEL	AUTOMOTIVE AIR CONDITIONER THERMOSTAT CUTOFF SWITCH	AUTOMOTIVE AIR CONDITIONER COMPRESSOR CLUTCH
RP 14 YEL	AUTOMOTIVE AIR CONDITIONER COOLANT FAN CONTROL	COOLANT FAN RELAY
RR 14 YEL	BRAKE LAMP SWITCH	TURN SIGNAL SWITCH
RS 14 YEL	HEADLAMP SWITCH INSTRUMENT PANEL LAMP FEED SWITCH	OVERCURRENT PROTECTION (5A FUSE TYPICAL)
RT 14 YEL	HORN RELAY (COMMON)	HORN
RU 14 YEL	HORN RELAY (COIL)	HORN SWITCH
RW 14 YEL	HAZARD FLASHER	TURN SIGNAL SWITCH
RX 14 YEL	EUL WARNING LAMP	EUL MODULE
RY 14 WHT	INSTRUMENT CLUSTER/ EUL MODULE	GROUND
SA 14 YEL	ENGINE WATER TEMPERATURE SENDER	ENGINE WATER TEMPERATURE GAUGE
SB 14 YEL	ENGINE OIL PRESSURE SENDER	ENGINE OIL PRESSURE GAUGE
SC 14 YEL	VEHICLE RIGHT REAR TURN SIGNAL/BRAKE LAMP CIRCUIT	RIGHT REAR TURN SIGNAL/ BRAKE LAMPS
SD 14 YEL	VEHICLE LEFT REAR TURN SIGNAL/BRAKE LAMP CIRCUIT	LEFT REAR TURN SIGNAL/ BRAKE LAMPS
SE 16YEL(WHT)	SPEED SENSOR (TWISTED PAIR)	SPEEDOMETER AND SPEED CONTROL MODULE
SF 16WHT(BLK)	SPEED SENSOR (TWISTED PAIR)	SPEEDOMETER AND SPEED CONTROL MODULE
SG 14 YEL	IGNITION SWITCH START FEED	GENERAL(NEUTRAL SAFETY SWITCH, FUEL PUMP RELAY COIL,ETC)
SH 14 YEL	IGNITION SWITCH RUN/START FEED	GENERAL(IGNITION COIL RELAY NORMALLY OPEN CONTACT,ETC)

WIRE IDENTIFICATION CHART

CODE/COLOR	FROM:	TO:
SJ 12YEL(BLK)	OVERCURRENT PROTECTION (16GA FUSELINK TYPICAL)	CHASSIS BATTERY FEED
SK 12YEL(WHT)	OVERCURRENT PROTECTION (16GA FUSELINK TYPICAL)	CHASSIS BATTERY HEADLAMP SWITCH FEED #1
SL 12YEL(BLU)	OVERCURRENT PROTECTION (16GA FUSELINK TYPICAL)	CHASSIS BATTERY IGNITION SWITCH FEED #1
SM 12YEL(BLK)	OVERCURRENT PROTECTION (16GA FUSELINK TYPICAL)	RADIATOR FAN #1 CIRCUIT BREAKER FEED
SN 12YEL(BLK)	OVERCURRENT PROTECTION (16GA FUSELINK TYPICAL)	RADIATOR FAN #2 CIRCUIT BREAKER FEED
SP 14 YEL	HEADLAMP SWITCH MARKER CIRCUIT FEED	OVERCURRENT PROTECTION (15A FUSE TYPICAL)
SR 12YEL(BRN)	IGNITION SWITCH RUN ONLY FEED	OVERCURRENT PROTECTION (15A FUSE TYPICAL)
SS 12YEL(WHT)	IGNITION SWITCH ACCESSORY FEED	OVERCURRENT PROTECTION (15A FUSE TYPICAL)
ST 14 YEL	OVERCURRENT PROTECTION (15A FUSE TYPICAL)	TURNS/BACK UP CIRCUIT FEED
SU	STARTER SOLENOID BATTERY TERMINAL	ALTERNATOR BATTERY TERMINAL
SW 14 YEL	TURN SIGNAL FLASHER	TURN SIGNAL SWITCH
SX 14 YEL	REAR WINDOW WASHER SWITCH	REAR WINDOW WASHER BOTTLE PUMP
SY 14 YEL	IGNITION COIL	TACHOMETER
TA 14 YEL	OVERCURRENT PROTECTION (15A FUSE TYPICAL)	IGNITION RUN ONLY GENERAL FEED (RADIATOR FAN RELAY COIL,ETC)
TB 12 YEL	OVERCURRENT PROTECTION (25A FUSE TYPICAL)	IGNITION RUN ONLY GENERAL FEED (AUTO AC BLOWER(NOT HIGH),ETC)
TC 14 YEL	OVERCURRENT PROTECTION (15A FUSE TYPICAL)	IGNITION RUN ONLY GENERAL FEED (DOOR LOCKS,REAR WIPER,ETC.)
TD 14 YEL	OVERCURRENT PROTECTION (15A FUSE TYPICAL)	CHASSIS BATTERY GENERAL FEED
TE 16 WHT	GENERATOR	GENERATOR LOW OIL INDICATOR LAMP
TF 16 YEL	GENERATOR	GENERATOR LOW OIL INDICATOR LAMP

WIRE IDENTIFICATION CHART

CODE/COLOR	FROM:	TO:
TG 16 YEL	TELEVISION	SPEAKER RIGHT (POSITIVE)
TH 16 WHT	TELEVISION	SPEAKER RIGHT (NEGATIVE)
TJ 16 YEL	TELEVISION	SPEAKER LEFT (POSITIVE)
TK 16 WHT	TELEVISION	SPEAKER LEFT (NEGATIVE)
TL 16 YEL	FRONT RIGHT TV SPEAKER NEGATIVE,SERIES CONNECTION	FRONT LEFT TV SPEAKER POSITIVE,SERIES CONNECTION
TM 16 WHT	STEP COVER SWITCH	STEP COVER SOLENOID MOVES STEP OUT
TN 14 YEL	STARTER SOLENOID BATTERY TERMINAL	ALTERNATOR REGULATOR
TP 14 WHT	REAR AUTOMOTIVE LAMPS(TURN, MARKER,ETC)	GROUND
TR 14 YEL	VEHICLE BACK UP CIRCUIT FEED	BACK UP LAMPS
TS 14 YEL	STARTER SOLENOID (I TERMINAL)	ENGINE WIRING (IGNITION MODULE)
TT 14 YEL	NEUTRAL SAFETY SWITCH	STARTER SOLENOID (S TERMINAL)
TU 14 WHT	IGNITION COIL RELAY (COIL)	GROUND
TW 14 YEL	IGNITION SWITCH START/RUN FEED	IGNITION COIL
TX 14 YEL	IGNITION COIL RELAY (COMMON)	IGNITION COIL
TY 14 YEL	ALTERNATOR (T TERMINAL)	CHOKE HEATER
UA 14 YEL	FUEL PUMP FUSE	OIL PRESSURE CUTOUT SWITCH/ FUEL PUMP RELAY(NO),ETC
UB 14 YEL	INERTIA SWITCH (FUEL PUMP SHUTOFF)	FUEL PUMP RELAY (NORMALLY CLOSED)
UC 14 YEL	FUEL PUMP RELAY (COMMON)	FUEL PUMP
UD 16 WHT	FUEL GAUGE	FUEL SENDER

WIRE IDENTIFICATION CHART

CODE/COLOR	FROM:	TO:
UE 14 YEL	INERTIA SWITCH (FUEL PUMP SHUTOFF)	OIL PRESSURE CUTOFF SWITCH
UF 14 WHT	FUEL PUMP	GROUND
UG 14 WHT	FUEL PUMP RELAY (COIL)	GROUND
UH 16 YEL	LP DETECTOR (SHUTOFF SYSTEM,YEL)	LP SAFETY VALVE
UJ 16 YEL	LP DETECTOR (SHUTOFF SYSTEM,YEL)	LP SAFETY SWITCH
UK 16 WHT	LP DETECTOR (BLK)(REF WB)	GROUND
UL 16 WHT	EUL LAMP	EUL MODULE
UM 16 WHT	DOOR JAMB DOME LAMP SWITCH	GROUND
UN 16 WHT	SEAT BELT LAMP	EUL MODULE
UP 16 YEL	SEAT BELT LAMP	SEAT BELT BUZZER
UR 16 WHT	PARK BRAKE SWITCH	PARK BRAKE LAMP
US 16 YEL	OVERCURRENT PROTECTION (6A BREAKER TYPICAL)	COACH BATTERY FEED TO BATTERY CONDITION SWITCH
UT 14 YEL	DOOR JAMB DOME LAMP SWITCH (SWITCH POSITIVE)	DOME LAMP
UU 16 YEL	WATER HEATER	VACUUM VALVE SOLENOID
UW 16 WHT	VACUUM VALVE SOLENOID	GROUND
UX 16 YEL	LP DETECTOR #2 (SHUTOFF SYSTEM,YEL)	LP SAFETY VALVE
UY 16 YEL	LP DETECTOR #2 (SHUTOFF SYSTEM,YEL)	LP SAFETY VALVE
WA 14 YEL	EXTERIOR SERVICE LAMP SWITCH	EXTERIOR SERVICE LAMP
WB 16 YEL	OVERCURRENT PROTECTION (6A BREAKER TYPICAL)	LP DETECTOR (REF UK)

WIRE IDENTIFICATION CHART

CODE/COLOR	FROM:	TO:
WC 14 YEL	DDVRCURRENT PROTECTION (15A BREAKER TYPICAL)	COMPARTMENT LAMPS (REF WE)
WD 14 WHT	AISLE LAMPS	GROUND
WE 14 WHT	COMPARTMENT LAMPS (REF WC)	GROUND
WF 12YEL(WHT)	OVERCURRENT PROTECTION (30A BREAKER TYPICAL)	PARK BRAKE COMPRESSOR SOENOID
WG 12YEL(BLK)	OVERCURRENT PROTECTION (30A BREAKER TYPICAL)	IGNITION RELAY
WH 14 YEL	OVERCURRENT PROTECTION (15A BREAKER TYPICAL)	IGNITION SWITCH RUN ONLY FEED
WJ 12 YEL	OVERCURRENT PROTECTION (20A BREAKER TYPICAL)	IGNITION SWITCH ACCESSORY FEED RELAY
WK 14 YEL	OVERCURRENT PROTECTION (15A BREAKER TYPICAL)	IGNITION SWITCH ACCESSORY FEED
WL 14 YEL	POWER DOOR LOCK RELAY (PIN 30)	POWER DOOR LOCK MOTOR(S) (LOCK)
WM 14 WHT	POWER DOOR UNLOCK RELAY (PIN 30)	POWER DOOR LOCK MOTOR(S) (UNLOCK)
WN 16 YEL	RADIO POWER SWITCH (ACCESSORY POWER)	DASH RADIO (ACCESSORY POWER)
WP 10 YEL	OVERCURRENT PROTECTION (25A BREAKER TYPICAL)	FRONT PANEL LOADS(INVERTER, RADIO)(96 M-SERIES)
WR 14 YEL	OVERCURRENT PROTENTION (15A BREAKER TYPICAL)	POWER SEAT LIFT SWITCH
WS 14 WHT	POWER SEAT LIFT SWITCH	GROUND
WT 14 YEL	POWER SEAT LIFT SWITCH (UP)	MOTOR (POSITIVE UP)
WU 14 WHT	POWER SEAT LIFT SWITCH (DOWN)	MOTOR (POSITIVE DOWN)
WW 14 WHT	SPOT LAMP SWITCH	GROUND
WX 14 YEL	HALLWAY CEILING LAMP SWITCH	HALLWAY CEILING LAMP
WY 10 WHT	AUTOMOTIVE AIR CONDITIONER MOTOR	GROUND

WIRE IDENTIFICATION CHART

CODE/COLOR	FROM:	TO:
XA 12/10 YEL	VEHICLE AUTOMOTIVE AIR FEED CIRCUIT	AUTOMOTIVE AIR CONDITIONER BLOWER (USE 10 IF OVER 6')
XB 14 YEL	DRIVER'S DOOR POWER WINDOW SWITCH(PIN 5)	DRIVER'S DOOR POWER WINDOW MOTOR(POSITIVE UP)
XC 14 WHT	DRIVER'S DOOR POWER WINDOW SWITCH(PIN 1)	DRIVER'S DOOR POWER WINDOW MOTOR(POSITIVE DOWN)
XD 16 WHT	MONITOR PANEL	HOLDING TANK LEVEL SENSOR (FULL)
XE 16 WHT	MONITOR PANEL	HOLDING TANK LEVEL SENSOR (3/4)
XF 16 WHT	MONITOR PANEL	HOLDING TANK LEVEL SENSOR (1/2)
XG 16 WHT	MONITOR PANEL	HOLDING TANK LEVEL SENSOR (1/4)
XH 16 YEL	MONITOR PANEL	WATER TANK LEVEL SENSOR
XJ 16 YEL	MONITOR PANEL	BLACK HOLDING LEVEL SENSOR (MAIN TANK)
XK 16 YEL	MONITOR PANEL	GRAY AUXILIARY HOLDING TANK #1 LEVEL SENSOR (AUX TANK #1)
XL 16 YEL	MONITOR PANEL	GRAY AUXILIARY HOLDING TANK #2 LEVEL SENSOR (AUX TANK #2)
XM 14 YEL	OVERCURRENT PROTECTION (18GA FUSELINK TYPICAL)	IGNITION START RELAY
XN 16 YEL	FRONT ROOF AIR CONDITIONER (EXHAUST)	THERMOSTAT (EX TERMINAL)
XP 16 YEL	FRONT ROOF AIR CONDITIONER (COOL)	THERMOSTAT (Y TERMINAL)(Y EXPORT AIR)
XR 16 YEL	FRONT ROOF AIR CONDITIONER (HIGH SPEED BLOWER)	THERMOSTAT (GH TERMINAL)(H EXPORT AIR)
XS 16 YEL	FRONT ROOF AIR CONDITIONER (LOW SPEED BLOWER)	THERMOSTAT (GL TERMINAL)(G EXPORT AIR)
XT 14 YEL	IGNITION START RELAY #1 (NORMALLY CLOSED CONTACT)	IGNITION START RELAY #2 (COMMON CONTACT)
XU 14 YEL	DINETTE OVHD LAMP SWITCH	DINETTE OVHD LAMP
XW 14 WHT	IGNITION SWITCH ACCESSORY FEED RELAY CIRCUIT	GROUND

WIRE IDENTIFICATION CHART

CODE/COLOR	FROM:	TO:
XX 14 YEL	GALLEY LAMP SWITCH	GALLEY LAMP
XY 14 YEL	MAKE UP LAMP #2 SWITCH	MAKE UP LAMP #2
YA 14 YEL	TAG AXLE PRESSURE CONTROL SWITCH	COMPRESSOR SOLENOID/ SOLENOID AIR VALVE
YB 14 WHT	LOW AIR PRESSURE SWITCH	GROUND
YC 10YEL(BLU)	OVERCURRENT PROTECTION (30A BREAKER TYPICAL)	TAG AXLE COMPRESSOR SOLENOID
YD 14 WHT	TAG AXLE MOUNTING PLATE SCREW	GROUND
YE 10 WHT	TAG AXLE COMPRESSOR	GROUND
YF 12 WHT	TAG AXLE BRAKE CONTROL MODULE/BRAKE MAGNET	GROUND
YG 12YEL(BLK)	OVERCURRENT PROTECTION (20A BREAKER TYPICAL)	TAG AXLE BRAKE CONTROL MODULE
YH 12YEL(BLU)	TAG AXLE BRAKE CONTROL MODULE	TAG AXLE BRAKE MAGNET
YJ 10YEL(WHT)	TAG AXLE COMPRESSOR SOLENOID	TAG AXLE COMPRESSOR
YK 14 YEL	BEDROOM CEILING LAMP SWITCH#1 (2 SWITCH SYSTEM)	BEDROOM CEILING LAMP SWITCH #2 (2 SWITCH SYSTEM)
YL 14 YEL	BEDROOM CEILING LAMP SWITCH #1 (2 SWITCH SYSTEM)	BEDROOM CEILING LAMP SWITCH #2 (2 SWITCH SYSTEM)
YM 14 YEL	HALLWAY CEILING LAMP SWITCH #1 (2 SWITCH SYSTEM)	HALLWAY CEILING LAMP SWITCH #2 (2 SWITCH SYSTEM)
YN 14 YEL	HALLWAY CEILING LAMP SWITCH #1 (2 SWITCH SYSTEM)	HALLWAY CEILING LAMP SWITCH #2 (2 SWITCH SYSTEM)
YP 14 YEL	VALANCE LAMP SWITCH #1 (3 WAY SWITCH)	VALANCE LAMP SWITCH #2 (3 WAY SWITCH)
YR 14 YEL	VALANCE LAMP SWITCH #1 (3 WAY SWITCH)	VALANCE LAMP SWITCH #2 (3 WAY SWITCH)
YS 14 YEL	VALANCE LAMP SWITCH	VALANCE LAMP
YT 14 YEL	FRONT VALANCE LAMP SWITCH	FRONT VALANCE LAMP

WIRE IDENTIFICATION CHART

CODE/COLOR	FROM:	TO:
YU 14 YEL	REAR VALANCE LAMP SWITCH	REAR VALANCE LAMP
YW 14 WHT	DOOR BELL SWITCH	DOOR BELL
YX 14 YEL	IGNITION SWITCH RUN/START FEED	ALTERNATOR WARNING LAMP
YY 14 YEL	ALTERNATOR VOLTAGE REGULATOR	ALTERNATOR WARNING LAMP
AAA 16 WHT	STEP COVER SWITCH (REF GX)	STEP COVER SOLENOID MOVES STEP IN
AAB 14 YEL	DINETTE READING LAMPS	DINETTE READING LAMP SWITCH
AAC 14 YEL	LOUNGE READING LAMPS	LOUNGE READING LAMP SWITCH
AAD 14 YEL	FORD CHASSIS TRAILER MARKER LAMP CIRCUIT (BR/WHT)	TRAILER CONNECTOR SOCKET MARKER LAMPS
AAE 14 YEL	FORD CHASSIS TRAILER BACKUP LAMP CIRCUIT (BLK/LT GRN)	TRAILER CONNECTOR SOCKET BACKUP LAMPS
AAF 14 YEL	FORD CHASSIS TRAILER LEFT TURN/BRAKE LAMP CIRCUIT (YEL)	TRAILER CONNECTOR SOCKET LEFT TURN/BRAKE LAMP
AAG 14 YEL	FORD CHASSIS TRAILER RIGHT TURN/BRAKE LAMP CIRCUIT (DKG)	TRAILER CONNECTOR SOCKET RIGHT TURN/BRAKE LAMP
AAH 14 YEL	BATH-VENT,POWER	BATH-VENT, THERMOSTAT
AAJ 14 YEL	BATH-VENT,POWER	BATH-VENT, THERMOSTAT
AAK 16 WHT	SWITCH-WATER PUMP (MULTIPLEX SYSTEM)	LATCHING RELAY (WITH 4 OR MORE SWITCHES)
AAL 16 WHT	SWITCH-WATER PUMP (MULTIPLEX SYSTEM)	GROUND
AAM 14 YEL	CHASSIS SUPPLIED WIRE ASM (DARK BLUE)(GM)	RIGHT TAIL LAMP PARK (WIE)
AAN 14 YEL	CHASSIS SUPPLIED WIRE ASM (PURPLE) (GM)	LEFT TAIL LAMP PARK (WIE)
AAP 10 YEL	55 AMP BREAKER JUMPER WIRE	30 AMP BREAKER
AAR 14 YEL	TV/RADIO SPEAKER FEED SELECTOR SWITCH	TV SPEAKER AMPLIFIER

WIRE IDENTIFICATION CHART

CODE/COLOR	FROM:	TO:
AAS 16 YEL	SPEAKER (NEGATIVE) SPEAKERS IN SERIES	SPEAKER (POSITIVE)
AAT 16 YEL	AMPLIFIER POSITIVE OUT (AAU NEGATIVE)	FRONT WOOFER (WITH DELUXE SOUND SYSTEM)
AAU 16 WHT	AMPLIFIER NEGATIVE OUT (AAT POSITIVE)	FRONT WOOFER (WITH DELUXE SOUND SYSTEM)
AAW 16 YEL	AMPLIFIER POSITIVE OUT (AAX NEGATIVE)	REAR WOOFER (WITH DELUXE SOUND SYSTEM)
AAX 16 WHT	AMPLIFIER NEGATIVE OUT (AAW POSITIVE)	REAR WOOFER (WITH DELUXE SOUND SYSTEM)
AAY 12 YEL	SLIDEOUT ROOM CONTROL SWITCH (RAM #1)	SLIDEOUT DRIVE MOTOR LEAD #1
AAZ 12 YEL	SLIDEOUT ROOM CONTROL SWITCH (RAM #1)	SLIDEOUT DRIVE MOTOR LEAD #2
BBA 16 WHT	SLIDEOUT WIRING (PARK BRAKE SW)(SWITCHED GRD)	SLIDEOUT ROOM RELAY (GROUND TERMINAL)
BBB 16 YEL	SLIDEOUT ROOM CIRCUIT BREAKER (6 AMP)	SLIDEOUT ROOM RELAY (PIN 86 & 87)
BBC 16 YEL	LOAD SHEDDER MONITOR PANEL (RED WIRE)	LOAD SHEDDER CONTROL BOARD (RED WIRE)
BBD 16 YEL	LOAD SHEDDER MONITOR PANEL (BLUE WIRE)	LOAD SHEDDER CONTROL BOARD (BLUE WIRE)
BBE 16 YEL	LOAD SHEDDER MONITOR PANEL (BLACK WIRE)	LOAD SHEDDER CONTROL BOARD (BLACK WIRE)
BBF 16 YEL	LOAD SHEDDER MONITOR PANEL (GRAY WIRE)	LOAD SHEDDER CONTROL BOARD (GRAY WIRE)
BBG 14 YEL	DINETTE CEILING LAMP SWITCH	DINETTE CEILING LAMP
BBH 16 YEL	REAR COMPRESSOR SIGNAL REAR THERMOSTAT	LOAD SHEDDER CONTROL BOARD
BBJ 16 YEL	LOAD SHEDDER CONTROL BOARD	REAR A/C (COOL)
BBK 12 WHT	JET AIR/TAG AXLE WIRING	GROUND, CHASSIS
BBL 14 YEL	OVHD SWITCH	OVHD HALOGEN LAMPS
BBM 16 YEL	SLIDEOUT ROOM SWITCH (ROOM TWO EXTEND)	HWH WIRING (ROOM TWO EXTEND)

WIRE IDENTIFICATION CHART

CODE/COLOR	FROM:	TO:
BBN 16 YEL	SLIDEOUT ROOM SWITCH (ROOM TWO RETRACT)	HWH WIRING (ROOM TWO RETRACT)
BBP 14 YEL	ICC COURTESY BLINK SWITCH	ICC COURTESY BLINK RELAY
BBR 14 YEL	ICC COURTESY BLINK RELAY	CLEARANCE LAMPS
BBS 14 YEL	CHASSIS FUSE PANEL	ICC COURTESY BLINK RELAY
BBT 14 YEL	DOCKING LAMP SWITCH TRIGGER RELAY	DOCKING LAMP SWITCH
BBU 12 YEL	DOCKING LAMP CIRCUIT BREAKER	DOCKING LAMP RELAY
BBW 14 YEL	VEHICLE LEFT HEADLAMP LOW BEAM CIRCUIT	LEFT LOW BEAM LAMP
BBX 14 YEL	VEHICLE RIGHT HEADLAMP LOW BEAM CIRCUIT	RIGHT LOW BEAM LAMP
BBY 14 YEL	SWITCH-MONITOR PANEL (IN EXT. WATER CENTER)	EXTERIOR MONITOR PANEL (IN EXT. WATER CENTER)
BBZ 14 YEL	OVERCURRENT PROTECTION (15A FUSE/BREAKER TYPICAL)	AUXILIARY FURNACE (CCA)
CCA 14 WHT	AUXILIARY FURNACE	GROUND
CCB 16 YEL	EXTERIOR MONITOR PANEL	WATER TANK LEVEL SENSOR
CCC 16 YEL	EXTERIOR MONITOR PANEL	MAIN HOLDING TANK LEVEL SENSOR
CCD 16 YEL	EXTERIOR MONITOR PANEL	AUX HOLDING TANK LEVEL SENSOR
CCE 14 YEL	COMPARTMENT LAMP SWITCH	COMPARTMENT LAMP
CCF 14 YEL	COMPARTMENT LAMP SWITCH	COMPARTMENT LAMP
CCG 14 YEL	COMPARTMENT LAMP SWITCH	COMPARTMENT LAMP
CCH 14 YEL	COMPARTMENT LAMP SWITCH	COMPARTMENT LAMP
CCJ 14 YEL	COMPARTMENT LAMP SWITCH	COMPARTMENT LAMP

WIRE IDENTIFICATION CHART

CODE/COLOR	FROM:	TO:
CCK 14 YEL	COMPARTMENT LAMP SWITCH	COMPARTMENT LAMP
CCL 14 YEL	COMPARTMENT LAMP SWITCH	COMPARTMENT LAMP
CCM 14 YEL	COMPARTMENT LAMP SWITCH	COMPARTMENT LAMP
CCN 16 YEL	THERMOSTATE LOW SPEED FAN SIGNAL	CENTRAL AIR AND LOAD SHEDDER
CCP 16 YEL	LOAD SHEDDER COMPRESSOR TWO CONTROL RELAY	CENTRAL A/C COMPRESSOR TWO
CCR 14 YEL	SWITCH-MONITOR PANEL (IN EXT. WATER CENTER)	EXTERIOR MONITOR PANEL (IN EXT. WATER CENTER)
CCS 16 YEL	NOISE FILTER	RADIO POWER INPUT
CCT 16 YEL	REAR RIGHT TV SPEAKER NEGATIVE,SERIES CONNECTION	REAR LEFT TV SPEAKER POSITIVE,SERIES CONNECTION
CCU 16 YEL	GM DOME LAMP POWER	DOME LAMP
CCW 12 YEL	DUAL MODE SOLENOID (CHASSIS SIDE)	FUSE HOLDER (30 AMP)
CCX 16 YEL	ORG WIRE ON AIR COMPRESSOR	AIR PRESSURE SWITCH ON AIR TANK
CCY 16 YEL	HWH WIRING (BATTERY POWER)	SLIDEOUT ROOM SWITCH (POSITIVE)
CCZ 16 YEL	HWH WIRING (SWITCHED BATTERY POWER)	SLIDEOUT ROOM #1 SWITCH (POSITIVE)
DDA 16 YEL	HWH WIRING (PUMP RELAY CONTROL)	SLIDEOUT ROOM SWITCH (POSITIVE)
DDB 14 YEL	REAR AUTO HEATER CIRCUIT BREAKER	REAR AUTO HEATER RELAY (POWER)
DDC 14 YEL	REAR AUTO HEATER RELAY (SWITCHED POWER)	REAR AUTO HEATER SWITCH (COMMON TERMINAL)
DDD 14 YEL	MODULE-CHARGE CONTROL RELAY OUTPUT	AUX-START SOLENOID RELAY
DDE 14 YEL	AUX-START SOLENOID RELAY	AUX-START SOLENOID
DDF 10 YEL	HEATER BLOWER CIRCUIT BREAKER	HEATER BLOWER RELAY

WIRE IDENTIFICATION CHART

CODE/COLOR	FROM:	TO:
DDG 10 YEL	CIRCUIT BREAKER BUSS BAR	CHASSIS BATTERY FEED CIRCUIT BREAKER
DDH 14 YEL	FREIGHTLINER RUN ONLY TRIGGER CIRCUIT	HEATER BLOWER RELAY
DDJ 16 WHT	CHASSIS PARKING BRAKE TRIGGER CIRCUIT	LEVELING SYSTEM PARKING BRAKE SENSOR WIRE
DDK 16 YEL	HWH WIRING (PUMP RELAY CONTROL)	REAR SLIDEOUT ROOM SWITCH (POSITIVE)
DDL 14 WHT	FRONT LEFT AUTOMOTIVE LAMPS	GROUND
DDM 14 WHT	FRONT RIGHT AUTOMOTIVE LAMPS	GROUND
DDN 16 YEL	TIMER MODULE	CHECK ANTENNA LIGHT
DDP 12 YEL	OVERCURRENT PROTECTION (20A BREAKER TYPICAL)	INVERTER FEED (INVERTER NUMBER 2)
DDR 12 WHT	INVERTER (INVERTER NUMBER 2)	GROUND
DDS 12 WHT	INVERTER CHASSIS (INVERTER NUMBER 2)	GROUND
DDT 12 YEL	POWER COMPT DOOR LOCK RELAY (RIGHT SIDE)	POWER COMPT DOOR LOCK MOTOR(S) (RIGHT SIDE)
DDU 12 WHT	POWER COMPT DOOR UNLOCK RELAY (RIGHT SIDE)	POWER COMPT LOCK MOTOR(S) (UNLOCK) (RIGHT SIDE)
DDV 12 YEL	POWER COMPT DOOR LOCK RELAY (LEFT SIDE)	POWER COMPT LOCK MOTOR(S) (LOCK) (LEFT SIDE)
DDW 12 WHT	POWER COMPT DOOR UNLOCK RELAY (LEFT SIDE)	POWER COMPT LOCK MOTOR(S) (UNLOCK) (LEFT SIDE)
DDX 12 YEL	OVERCURRENT PROTECTION (20A BREAKER TYPICAL)	POWER COMPT DOOR LOCK/ UNLOCK RELAY (RIGHT SIDE)
DDY 12 YEL	OVERCURRENT PROTECTION (20A BREAKER TYPICAL)	POWER COMPT DOOR LOCK/ UNLOCK RELAY (LEFT SIDE)
DDZ 12 YEL	POWER COMPT DOOR LOCK SWITCH (LOCK) (PIN 1)	POWER COMPT DOOR LOCK RELAY (PIN 86)
EEA 12 WHT	POWER COMPT DOOR LOCK SWITCH (UNLOCK) (PIN 5)	POWER COMPT DOOR UNLOCK RELAY (PIN 86)
EEB 12 WHT	POWER COMPT DOOR LOCK RELAYS (LEFT SIDE)	GROUND

WIRE IDENTIFICATION CHART

CODE/COLOR	FROM:	TO:
EEC 12 YEL	25 AMP BREAKER IN 12 VOLT PANEL	SOFA RECLINER SWITCH SOFA 4-WAY RECLINER
EED 12 WHT	SOFA RECLINER SWITCH SOFA 4-WAY RECLINER	GROUND
EEE 14 YEL	OVERCURRENT PROTECTION (15A BREAKER TYPICAL)	12V POWER JACK
EEF 14 WHT	12V POWER JACK	GROUND
EEG 12 WHT	POWER COMPT DOOR LOCK RELAYS (RIGHT SIDE)	GROUND
EEH 12 YEL	SOFA RECLINER SWITCH EXTEND	SOFA RECLINER MOTOR SOFA 4-WAY
EEJ 12 YEL	SOFA RECLINER SWITCH RETRACT	SOFA RECLINER MOTOR SOFA 4-WAY
EEK 18 YEL	AUDIO AMPLIFIER	LH FRT SPKR (+)
EEL 18 WHT	AUDIO AMPLIFIER	LH FRT SPKR (-)
EEM 18 YEL	AUDIO AMPLIFIER	RH FRT SPKR (+)
EEN 18 WHT	AUDIO AMPLIFIER	RH FRT SPKR (-)
EEP 18 YEL	AUDIO AMPLIFIER	LH RR SPKR (+)
EER 18 WHT	AUDIO AMPLIFIER	LH RR SPKR (-)
EES 18 YEL	AUDIO AMPLIFIER	RH RR SPKR (+)
EET 18 WHT	AUDIO AMPLIFIER	RH RR SPKR (-)
EEU 18 YEL	AUDIO AMPLIFIER	CTR CHANNEL SPKR (+)
EEW 18 WHT	AUDIO AMPLIFIER	CTR CHANNEL SPKR (-)
EEX 12/10 YEL	PASSENGER AUTO A/C FEED CIRCUIT	PASSENGER AUTO A/C BLOWER (USE 10 IF OVER 6')
EEY 10 WHT	PASSENGER AUTO A/C MOTOR	GROUND

WIRE IDENTIFICATION CHART

CODE/COLOR	FROM:	TO:
EEZ 12/10 YEL	OVERCURRENT PROTECTION (30A BREAKER TYPICAL)	PASSENGER HI-SPEED HEATER FAN (USER 10 IF OVER 6')
FFA 10 YEL	PASSENGER HEATER BLOWER CIRCUIT BREAKER	PASSENGER HEATER BLOWER RELAY
FFB 10 YEL	OVERCURRENT PORTECTION (30A BREAKER TYPICAL)	POWER LOUNGE CHAIR
FFC 10 WHT	POWER LOUNGE CHAIR	GROUND
FFD 12 YEL	OVERCURRENT PROTECTION (30A BREAKER TYPICAL)	AWNING CONTROL BOX (12V POSITIVE)
FFE 12 WHT	AWNING CONTROL BOX	GROUND
FFF 12 YEL	AWNING CONTROL BOX	DOOR AWNING (MOTOR POSITIVE)
FFG 12 WHT	DOOR AWNING (MOTOR GROUND)	AWNING CONTROL BOX
FFH 12 YEL	AWNING CONTROL BOX	PATIO AWNING (MOTOR POSITIVE)
FFJ 12 WHT	PATIO AWNING (MOTOR GROUND)	AWNING CONTROL BOX
FFK 16 YEL	AWNING CONTROL BOX	DOOR AWNING SWITCH (EXTEND)
FFL 16 YEL	DOOR AWNING SWITCH (COMMON)	AWNING CONTROL BOX
FFM 16 YEL	AWNING CONTROL BOX	DOOR AWNING SWITCH (RETRACT)
FFN 16 YEL	AWNING CONTROL BOX	PATIO AWNING SWITCH (EXTEND)
FFP 16 YEL	PATIO AWNING SWITCH (COMMON)	AWNING CONTOL BOX
FFR 16 YEL	AWNING CONTOL BOX	PATIO AWNING SWITCH (RETRACT)
FFS 14 WHT	RELAY (PIN 30)	AWNING CONTROL BOX
FFT 14 WHT	PATIO AWNING SWITCH	AWNING CONTROL BOX
FFU 16 YEL	AWNING SELECTOR SWITCH (DOOR AWNING)	AWNING CONTROL SWITCH (DOOR AWNING)

WIRE IDENTIFICATION CHART

CODE/COLOR	FROM:	TO:
FFV 16 YEL	AWNING SELECTOR SWITCH (PATIO AWNING)	AWNING CONTROL SWITCH (PATIO AWNING)
FFW 14 YEL	LOUNGE LAMPS SWITCH #1	LOUNGE LAMPS SWITCH #2
FFX 14 YEL	LOUNGE LAMPS SWITCH #1	LOUNGE LAMPS SWITCH #2
FFY 14 YEL	CEILING FAN SWITCH	CEILING FAN
FFZ 14 YEL	OVERCURRENT PROTECTION (15A FUSE/BREAKER TYPICAL)	COACH LIGHTING,ETC CIRCUIT #7 (REF GGA)
GGA 14 WHT	COACH LIGHTING (REF-FFZ)	GROUND
GGB 14 YEL	POWER LIFT VENT	POWER LIFT SWITCH (UP)
GGC 14 YEL	POWER LIFT VENT	POWER LIFT SWITCH (DOWN)
GGD 16 YEL	CONTROL MODULE (LEFT FRONT SLIDE)(STOP)	SLIDEOUT SWITCH (LEFT FRONT SLIDE)
GGE 16 YEL	CONTROL MODULE (LEFT FRONT SLIDE)(GREEN LED)	SLIDEOUT SWITCH (LEFT FRONT SLIDE)
GGF 16 YEL	CONTROL MODULE (LEFT FRONT SLIDE)(RED LED)	SLIDEOUT SWITCH (LEFT FRONT SLIDE)
GGG 16 YEL	CONTROL MODULE (LEFT FRONT SLIDE)(SIGNAL)	LEFT FRONT SLIDE,FRONT RAM (ENCODER)
GGH 16 YEL	CONTROL MODULE (LEFT FRONT SLIDE)(+)	LEFT FRONT SLIDE,FRONT RAM (ENCODER)
GGJ 16 WHT	CONTROL MODULE (LEFT FRONT SLIDE)(-)	LEFT FRONT SLIDE,FRONT RAM (ENCODER)
GGK 16 YEL	CONTROL MODULE (LEFT FRONT SLIDE)(SIGNAL)	LEFT FRONT SLIDE,REAR RAM (ENCODER)
GGL 16 YEL	CONTROL MODULE (LEFT FRONT SLIDE)(+)	LEFT FRONT SLIDE,REAR RAM (ENCODER)
GGM 16 WHT	CONTROL MODULE (LEFT FRONT SLIDE)(-)	LEFT FRONT SLIDE,REAR RAM (ENCODER)
GGN 12 YEL	CONTROL MODULE (RAM #2)	SLIDEOUT ACTUATOR DRIVE LEAD #1
GGP 12 YEL	CONTROL MODULE (RAM #2)	SLIDEOUT ACTUATOR DRIVE LEAD #2

WIRE IDENTIFICATION CHART

CODE/COLOR	FROM:	TO:
GGR 16 YEL	FRONT ROOF HEAT PUMP	THERMOSTAT (W TERMINAL)
GGS 16 YEL	REAR ROOF HEAT PUMP	THERMOSTAT (W TERMINAL)
GGT 12 YEL	SOFA RECLINER SWITCH EXTEND	SOFA RECLINER MOTOR SOFA 4-WAY
GGU 12 YEL	SOFA RECLINER SWITCH RETRACT	SOFA RECLINER MOTOR SOFA 4-WAY
GGV 14 WHT	GPS (BLACK WIRE)	GROUND
GGW 16 YEL	GPS (GREEN/WHITE WIRE)	VEHICLE SPEED SENSOR (CHASSIS SUPPLIED)
GGX 14 YEL	10 OHM RESISTOR *	BEDROOM CEILING FAN (LOW SPEED)
GGY 14 YEL	BATHROOM VENT SWITCH	BATHROOM VENT
GGZ 14 YEL	BEDROOM VENT SWITCH	BEDROOM VENT
HHA 14 YEL	OVERCURRENT PROTECTION (15A FUSE/BREAKER TYPICAL)	COACH VENTS/LAMPS (REF HHB)
HHB 14 WHT	COACH VENTS/LAMPS (REF HHA)	GROUND
HHC 12 YEL	STEP COVER SWITCH	STEP COVER MOTOR (+)RETRACT,(-)EXTEND
HHD 12 YEL	STEP COVER SWITCH	STEP COVER MOTOR (-)EXTEND,(+)RETRACT
HHE 16 YEL	SLIDEOUT ROOM SWITCH (ROOM THREE EXTEND)	HWH WIRING (ROOM THREE EXTEND)
HHF 16 YEL	SLIDEOUT ROOM SWITCH (ROOM THREE RETRACT)	HWH WIRING (ROOM THREE RETRACT)
HHG 16 YEL	SLIDEOUT ROOM SWITCH (ROOM FOUR EXTEND)	HWH WIRING (ROOM FOUR EXTEND)
HHH 16 YEL	SLIDEOUT ROOM SWITCH (ROOM FOUR RETRACT)	SLIDEOUT ROOM SWITCH (ROOM FOUR RETRACT)
HHJ 14 YEL	110V WATER HEATER TRIGGER SWITCH	WATER HEATER RELAY
HHK 14 YEL	DRIVER'S POWER SUNVISOR SWITCH	DRIVER'S POWER SUNVISOR

WIRE IDENTIFICATION CHART

CODE/COLOR	FROM:	TO:
HHL 14 YEL	DRIVER'S POWER SUNVISOR SWITCH	DRIVER'S POWER SUNVISOR
HHM 14 YEL	PASS POWER SUNVISOR SWITCH	PASS POWER SUNVISOR
HHN 14 YEL	PASS POWER SUNVISOR SWITCH	PASS POWER SUNVISOR
HHP 14 YEL	HOT WATER HEAT CONTROL BOARD (F1)	ZONE 1 FAN SPEED SWITCH
HHR 14 YEL	ZONE 1 FAN SPEED SWITCH	ZONE 1 HEATER FAN
HHS 16 YEL	HOT WATER HEAT CONTROL BOARD (TC)	ZONE 2 & 3 THERMOSTAT
HHT 16 YEL	HOT WATER HEAT CONTROL BOARD (T2)	ZONE 2 THERMOSTAT
HHU 14 YEL	HOT WATER HEAT CONTROL BOARD (F2)	ZONE 2 FAN SPEED SWITCH
HHV 14 YEL	ZONE 2 FAN SPEED SWITCH	ZONE 2 HEATER FAN
HHW 16 YEL	HOT WATER HEAT CONTROL BOARD (T3)	ZONE 3 THERMOSTAT
HHX 14 YEL	HOT WATER HEAT CONTROL BOARD (F3)	ZONE 3 HEATER FAN
HHY 16 WHT	AWNING CONTROL BOX	WIND SENSOR (NEGATIVE)
HHZ 16 YEL	AWNING CONTROL BOX	WIND SENSOR (POSITIVE)
JJA 16 YEL	AWNING CONTROL BOX	WIND SENSOR TEMPERATURE OUTPUT
JJB 16 YEL	AWNING CONTROL BOX	WIND SENSOR SPEED OUTPUT
JJC 14 YEL	ENGINE HEATER CIRCULATING PUMP SWITCH	HOT WATER HEAT CONTROL PANEL (BLU/BLK WIRE)
JJD 10 YEL	OVERCURRENT PROTECTION (25 FUSE TYPICAL)	HOT WATER HEAT CONTROL BOARD
JJE 10 WHT	HOT WATER HEAT CONTROL BOARD	GROUND
JJF 14 YEL	SATELLITE POWER SWITCH	SATELLITE-AUTO SEEK

WIRE IDENTIFICATION CHART

CODE/COLOR	FROM:	TO:
JJG 12 YEL	OVERCURRENT PROTECTION (20 AMP BREAKER TYPICAL)	SLIDEOUT ROOM CONTROL SWITCH (RAM #3)
JJH 12 WHT	SLIDEOUT ROOM CONTROL SWITCH (RAM #3)	GROUND
JJJ 12 YEL	SLIDEOUT ROOM CONTROL SWITCH (RAM #3)	SLIDEOUT DRIVE MOTOR LEAD #1
JJK 12 YEL	SLIDEOUT ROOM CONTROL SWITCH (RAM #3)	SLIDEOUT DRIVE MOTOR LEAD #2
JJL 12 YEL	OVERCURRENT PROTECTION (20 AMP BREAKER TYPICAL)	SLIDEOUT ROOM CONTROL SWITCH (RAM #2)
JJM 16 YEL	HWH WIRING (SWITCHED BATTERY POWER)	SLIDEOUT ROOM SWITCH #2 (SWITCHED EXTEND/RETRACT PWR)
JJN 16 YEL	HWH WIRING (SWITCHED BATTERY POWER)	SLIDEOUT ROOM SWITCH #3 (SWITCHED EXTEND/RETRACT PWR)
JJP 16 YEL	HWH WIRING (SWITCHED BATTERY POWER)	SLIDEOUT ROOM SWITCH #4 (SWITCHED EXTEND/RETRACT PWR)
JJR 16 YEL	REMOTE SWITCH (EXTEND)	PATIO AWNING CONTROL MODULE (RELAY POSITION 87A,EXTEND)
JJS 12 YEL	REMOTE SWITCH	DOOR AWNING CONTROL RELAY (RELAY POSITION 87A,EXTEND)
JJT 14 YEL	OVERCURRENT PROTECTION (15A FUSE/BREAKER TYPICAL)	COACH 12V RECEPTACLES (REF JJU)
JJU 14 WHT	COACH 12V RECEPTACLES (REF JJT)	GROUND
JJV 14 YEL	MONITOR PANEL LAMP SWITCH	MONITOR PANEL LAMP
JJW 14 YEL	RUN ONLY POWER BREAKER	RUN ONLY POWER RELAY
JJX 14 YEL	RUN ONLY POWER RELAY	GENERAL PURPOSE (RUN ONLY FEED)
JJY 14 YEL	RUN/ACC POWER #1 BREAKER	RUN/ACC POWER #1 RELAY
JJZ 14 YEL	RUN/ACC POWER #1 RELAY (REF LLD)	GENERAL PURPOSE (RUN/ACC FEED #1)
KKA 14 YEL	RUN/ACC POWER #2 BREAKER	RUN/ACC POWER #2 RELAY
KKB 14 YEL	RUN/ACC POWER #2 RELAY (REF LLE)	GENERAL PURPOSE (RUN/ACC FEED #2)

WIRE IDENTIFICATION CHART

CODE/COLOR	FROM:	TO:
KKC 12 YEL	POWER SEAT RELAY	POWER SEAT (HEATER)
KKD 16 YEL	CONFIRMATION EMERGENCY SHUT OFF SWITCH (IN COACH)	EMERGENCY SHUT OFF SWITCH (ON REMOTE FILL BRACKET)
KKE 16 YEL	EMERGENCY SHUT OFF SWITCH (ON REMOTE FILL BRACKET)	EMERGENCY SHUT OFF SOLENOID (ON LP TANK)
KKF 6 BLK	BATTERY DISCONNECT RELAY	COACH BUSS BAR
KKG 8 BLK	BATTERY MODE SOLENOID	CHASSIS BUSS BAR
KKH 14 YEL	EXTERIOR SERVICE LAMP SWITCH #1	EXTERIOR SERVICE LAMP SWITCH #2
KKJ 14 YEL	EXTERIOR SERVICE LAMP SWITCH #1	EXTERIOR SERVICE LAMP SWITCH #2
KKK 16 YEL	HWH WIRING (SWITCHED BATTERY POWER)	SLIDEOUT ROOM #2 SWITCH (POSITIVE)
KKL 16 YEL	HWH WIRING (SWITCHED BATTERY POWER)	SLIDEOUT ROOM #3 SWITCH (POSITIVE)
KKM 16 YEL	HWH WIRING (SWITCHED BATTERY POWER)	SLIDEOUT ROOM #4 SWITCH (POSITIVE)
KKN 14 YEL	KEYLESS ENTRY PORCH LIGHT OUTPUT	PORCH/STEP/MAP LAMP
KKP 14 YEL	LOUNGE CEILING ROPE LAMP SWITCH (CIRCUIT #1)	LOUNGE CEILING ROPE LAMP (REF CIRCUIT SSZ)
KKR 14 YEL	BEDROOM CEILING ROPE LAMP SWITCH	BEDROOM CEILING ROPE LAMP
KKS 14 YEL	BEDROOM VALANCE LAMP SWITCH	BEDROOM VALANCE LAMP
KKT 14 YEL	BEDROOM "MOOD" LAMP SWITCH	BEDROOM "MOOD" LAMP
KKU 16 YEL	REAR TV SPEAKER OUTPUT (RIGHT POSITIVE)	RIGHT SPEAKER (POSITIVE)
KKV 16 WHT	REAR TV SPEAKER OUTPUT (RIGHT NEGATIVE)	RIGHT SPEAKER (NEGATIVE)
KKW 16 YEL	REAR TV SPEAKER OUTPUT (LEFT POSITIVE)	LEFT SPEAKER (POSITIVE)
KKX 16 WHT	REAR TV SPEAKER OUTPUT (LEFT NEGATIVE)	LEFT SPEAKER (NEGATIVE)

WIRE IDENTIFICATION CHART

CODE/COLOR	FROM:	TO:
KKY 14 YEL	OVERCURRENT PROTECTION (15A FUSE/BREAKER TYPICAL)	COACH LIGHTING,ETC CIRCUIT #8 (REF KKZ)
KKZ 14 WHT	COACH LIGHTING (REF KKY)	GROUND
LLA 14 YEL	OVERCURRENT PROTECTION (15A FUSE/BREAKER TYPICAL)	COACH LIGHTING,ETC CIRCUIT #9 (REF LLB)
LLB 14 WHT	COACH LIGHTING (REF LLA)	GROUND
LLC 14 YEL	SEAT HEATER BREAKER (15 AMP BREAKER TYPICAL)	SEAT HEATER RELAY POSITION 30
LLD 14 WHT	RUN/ACC FEED #1 (REF JJZ)	GROUND
LLE 14 WHT	RUN/ACC FEED #2 (REF KKB)	GROUND
LLF 14 YEL	DOME LAMP RELAY	DOME LAMP
LLG 10/12 YEL	TRAILER BRAKE SIGNAL (OUTPUT FROM CONTROLLER)	TRAILER CONNECTOR (ELECTRIC BRAKES)
LLH 14 WHT	RUN ONLY GROUND SOURCE (CHASSIS SUPPLIED)	AUX START RELAY
LLJ 14 YEL	AUX START RELAY (RUN ONLY POWER)	AUX START SWITCH
LLK 10 YEL	CHASSIS BREAKER PANEL (LH FRT SLIDE)(FRT RAM)	CONTROL MODULE (LH FRT SLIDE)
LLL 10 WHT	CHASSIS GROUND BAR (LH FRT SLIDE)(FRT RAM)	CONTROL MODULE (LH FRT SLIDE)
LLM 10 YEL	CHASSIS BREAKER PANEL (LH FRT SLIDE)(REAR RAM)	CONTROL MODULE (LH FRT SLIDE)
LLN 10 WHT	CHASSIS GROUND BAR (LH FRT SLIDE)(REAR RAM)	CONTROL MODULE (LH FRT SLIDE)
LLP 10 YEL	CHASSIS BREAKER PANEL (REAR SLIDE RAM)	CONTROL MODULE (REAR SLIDE)
LLR 10 WHT	CHASSIS GROUND BAR (REAR SLIDE RAM)	CONTROL MODULE (REAR SLIDE)
LLS 10 YEL	CONTROL MODULE (LEFT FRONT SLIDE)	LT FRT SLIDE FRT RAM (MOTOR DRIVE LINE)
LLT 10 YEL	CONTROL MODULE (LEFT FRONT SLIDE)	LT FRT SLIDE FRT RAM (MOTOR DRIVE LINE)

WIRE IDENTIFICATION CHART

CODE/COLOR	FROM:	TO:
LLU 10 YEL	CONTROL MODULE (LEFT FRONT SLIDE)	LT FRT SLIDE RR RAM (MOTOR DRIVE LINE)
LLV 10 YEL	CONTROL MODULE (REAR SLIDE)	REAR SLIDEOUT RAM (MOTOR DRIVE LINE)
LLW 10 YEL	CONTROL MODULE (LEFT FRONT SLIDE)	LT FRT SLIDE RR RAM (MOTOR DRIVE LINE)
LLX 10 YEL	CONTROL MODULE (REAR SLIDE)	REAR SLIDEOUT RAM (MOTOR DRIVE LINE)
LLY 16 WHT	CONTROL MODULE (REAR SLIDE)(GROUND)	SLIDEOUT SWITCH (REAR SLIDEOUT)
LLZ 16 YEL	CONTROL MODULE (REAR SLIDE)(RETRACT)	SLIDEOUT SWITCH (REAR SLIDEOUT)
MMA 16 YEL	CONTROL MODULE (REAR SLIDE)(STOP)	SLIDEOUT SWITCH (REAR SLIDEOUT)
MMB 16 YEL	CONTROL MODULE (REAR SLIDE)(GREEN LED)	SLIDEOUT SWITCH (REAR SLIDEOUT)
MMC 16 YEL	CONTROL MODULE (REAR SLIDE)(EXTEND)	SLIDEOUT SWITCH (REAR SLIDEOUT)
MMD 16 YEL	CONTROL MODULE (REAR SLIDE)(RED LED)	SLIDEOUT SWITCH (REAR SLIDEOUT)
MME 10 YEL	CHASSIS SIDE OF SOLENOID (FRT LT/REAR SLIDE RAMS)	BREAKER PANEL BUSS BAR (FRT LT/REAR SLIDE RAMS)
MMF 10 YEL	CHASSIS SIDE OF SOLENOID (FRT RT SLIDE RAMS)	BREAKER PANEL BUSS BAR (FRT RT SLIDE RAMS)
MMG 10 YEL	CHASSIS SIDE OF SOLENOID (REAR SLIDE RAM)	BREAKER PANEL (REAR SLIDE RAM)
MMH 16 YEL	OVERCURRENT PROTECTION (6 AMP BREAKER TYPICAL)	POWER SUNVISOR SWITCH
MMJ 16 WHT	GROUND	POWER SUNVISOR SWITCH
MMK 16 YEL	BEDROOM STEREO (LEFT SPEAKER REF)	CROSS OVER BOX (POSITIVE)
MML 16 WHT	BEDROOM STEREO (LEFT SPEAKER REF)	CROSS OVER BOX (NEGATIVE)
MMM 16 YEL	BEDROOM STEREO (RIGHT SPEAKER REF)	CROSS OVER BOX (POSITIVE
MMN 16 WHT	BEDROOM STEREO (RT/WOOFER SPKER REF)	CROSS OVER BOX (NEGATIVE)

WIRE IDENTIFICATION CHART

CODE/COLOR	FROM:	TO:
MMP 16 YEL	CROSS OVER COIL (POSITIVE)	SUBWOOFER (BEDROOM)
MMR 14 YEL	CHASSIS TOW MARKER LAMPS CIRCUIT	TRAILER CONNECTOR (TAIL/MARKER LAMPS)
MMS 12 YEL	+12V	PASSENGER AC/HEATER CONTROLS
MMT 12 YEL	PASSENGER FAN SWITCH (LOW SPEED)	PASSENGER FAN
MMU 12 YEL	PASSENGER FAN SWITCH (MED SPEED)	PASSENGER FAN
MMV 12 YEL	PASSENGER FAN SWITCH (HIGH SPEED)	PASSENGER FAN
MMW 16 YEL	+12V	PASSENGER CONTROL PANEL LAMPS
MMX 16 WHT	PASSENGER CONTROL PANEL LAMPS	GROUND
MMY 16 WHT	PASSENGER TEMP AND VENT CONTROL	GROUND
MMZ 12 YEL	SLIDEOUT ROOM CONTROL SWITCH (RAM #1)	SLIDEOUT DRIVE MOTOR LEAD #1
NNA 12 YEL	SLIDEOUT ROOM CONTROL SWITCH (RAM #1)	SLIDEOUT DRIVE MOTOR LEAD #2
NNB 16 YEL	CONTROL MODULE (FRONT SLIDE) (SIGNAL)	FRONT SLIDE FRONT RAM (ENCODER)
NNC 16 YEL	CONTROL MODULE (FRONT SLIDE) (+)	FRONT SLIDE FRONT RAM (ENCODER)
NND 16 WHT	CONTROL MODULE (FRONT SLIDE) (-)	FRONT SLIDE FRONT RAM (ENCODER)
NNE 16 YEL	CONTROL MODULE (FRONT SLIDE) (SIGNAL)	FRONT SLIDE REAR RAM (ENCODER)
NNF 16 YEL	CONTROL MODULE (FRONT SLIDE) (+)	FRONT SLIDE REAR RAM (ENCODER)
NNG 16 WHT	CONTROL MODULE (FRONT SLIDE) (-)	FRONT SLIDE REAR RAM (ENCODER)
NNH 12 YEL	CONTROL MODULE (RAM #2)	SLIDEOUT ACTURATOR DRIVE LEAD #1
NNJ 12 YEL	CONTROL MODULE (RAM #2)	SLIDEOUT ACTURATOR DRIVE LEAD #2

WIRE IDENTIFICATION CHART

CODE/COLOR	FROM:	TO:
NNK 16 YEL	KEYLESS ENTRY TOUCH PAD SIGNAL	ENTRANCE DOOR TOUCH PAD
NNL 16 YEL	PASSENGER TEMP CONTROL (CONTROL OUT)	PASSENGER AC/HEATER
NNM 16 YEL	PASSENGER VENT CONTROL (CONTROL OUT)	PASSENGER VENT
NNN 16 YEL	CONTROL MODULE (RIGHT FRONT SLIDE)(STOP)	SLIDEOUT SWITCH (RIGHT FRONT SLIDE)
NNP 16 YEL	CONTROL MODULE (RIGHT FRONT SLIDE)(GREEN LED)	SLIDEOUT SWITCH (RIGHT FRONT SLIDE)
NNR 16 YEL	CONTROL MODULE (RIGHT FRONT SLIDE)(RED LED)	SLIDEOUT SWITCH (RIGHT FRONT SLIDE)
NNS 16 WHT	CONTROL MODULE (RIGHT FRONT SLIDE)(GROUND)	SLIDEOUT SWITCH (RIGHT FRONT SLIDEOUT)
NNT 16 YEL	CONTROL MODULE (RIGHT FRONT SLIDE)(SIGNAL)	RIGHT FRONT SLIDE,FRONT RAM (ENCODER)
NNU 16 YEL	CONTROL MODULE (RIGHT FRONT SLIDE)(+)	RIGHT FRONT SLIDE,FRONT RAM (ENCODER)
NNV 16 WHT	CONTROL MODULE (RIGHT FRONT SLIDE)(-)	RIGHT FRONT SLIDE,FRONT RAM (ENCODER)
NNW 16 YEL	CONTROL MODULE (RIGHT FRONT SLIDE)(SIGNAL)	RIGHT FRONT SLIDE,REAR RAM (ENCODER)
NNX 16 YEL	CONTROL MODULE (RIGHT FRONT SLIDE)(+)	RIGHT FRONT SLIDE,REAR RAM (ENCODER)
NNY 16 WHT	CONTROL MODULE (RIGHT FRONT SLIDE)(-)	RIGHT FRONT SLIDE,REAR RAM (ENCODER)
NNZ 10 YEL	CHASSIS BREAKER PANEL (RH FRT SLIDE)(FRT RAM)	CONTROL MODULE (RIGHT FRONT SLIDE)
PPA 10 WHT	CHASSIS GROUND BAR (RH FRT SLIDE)(FRT RAM)	CONTROL MODULE (RIGHT FRONT SLIDE)
PPB 10 YEL	CHASSIS BREAKER PANEL (RH FRT SLIDE)(REAR RAM)	CONTROL MODULE (RIGHT FRONT SLIDE)
PPC 10 WHT	CHASSIS GROUND BAR (RH FRT SLIDE)(REAR RAM)	CONTROL MODULE (RIGHT FRONT SLIDE)
PPD 10 YEL	CONTROL MODULE (RIGHT FRONT SLIDE)	RH FRT SLIDE FRT RAM (MOTOR DRIVE LINE)
PPE 10 YEL	CONTROL MODULE (RIGHT FRONT SLIDE)	RH FRT SLIDE FRT RAM (MOTOR DRIVE LINE)

WIRE IDENTIFICATION CHART

CODE/COLOR	FROM:	TO:
PPF 10 YEL	CONTROL MODULE (RIGHT FRONT SLIDE)	RH FRT SLIDE RR RAM (MOTOR DRIVE LINE)
PPG 10 YEL	CONTROL MODULE (RIGHT FRONT SLIDE)	RH FRT SLIDE RR RAM (MOTOR DRIVE LINE)
PPH 14 YEL	CHASSIS CLEARANCE LAMPS CRT #2 (REF MM)	CLEARANCE/MARKER LAMPS
PPJ 14 YEL	PASSENGER SUNVISOR SWITCH DRIVER'S SIDE	PASSENGER SUNVISOR SWITCH PASSENGER'S SIDE
PPK 14 YEL	PASSENGER SUNVISOR SWITCH DRIVER'S SIDE	PASSENGER SUNVISOR SWITCH PASSENGER'S SIDE
PPL 14 YEL	DASH RADIO ACCESSORY POWER	TV/RADIO SPEAKER SELECTOR SWITCH
PPM 12 YEL	OVERCURRENT PROTECTION (15A BREAKER TYPICAL)	LEFT FRONT SLIDEOUT LOCK SWITCH
PPN 12 WHT	LEFT FRONT SLIDEOUT LOCK SWITCH (REF PPM)	GROUND
PPP 12 YEL	OVERCURRENT PROTECTION (15A BREAKER TYPICAL)	RIGHT FRONT SLIDEOUT LOCK SWITCH
PPR 12 WHT	RIGHT FRONT SLIDEOUT LOCK SWITCH (REF PPP)	GROUND
PPS 12 YEL	LEFT FRONT SLIDEOUT LOCK SWITCH	LEFT FRONT SLIDEOUT LOCK MOTOR
PPT 12 YEL	LEFT FRONT SLIDEOUT LOCK SWITCH	LEFT FRONT SLIDEOUT LOCK MOTOR
PPU 12 YEL	RIGHT FRONT SLIDEOUT LOCK SWITCH	RIGHT FRONT SLIDEOUT LOCK MOTOR
PPV 12 YEL	RIGHT FRONT SLIDEOUT LOCK SWITCH	RIGHT FRONT SLIDEOUT LOCK MOTOR
PPW 14 YEL	SLIDEOUT LOCK SWITCH W/SLIDEOUT SWITCH #1 IN DASH	SLIDEOUT ROOM #1 SWITCH (POSITIVE)
PPX 14 YEL	SLIDEOUT LOCK SWITCH W/SLIDEOUT SWITCH #3 IN DASH	SLIDEOUT ROOM #3 SWITCH (POSITIVE)
PPY 14 YEL	SLIDEOUT LOCK SWITCH W/SLIDEOUT SWITCH #4 IN DASH	SLIDEOUT ROOM #4 SWITCH (POSITIVE)
PPZ 12 YEL	CHASSIS SUPPLIED WIRING	TRAILER TOW BATTERY FEED (7 WAY TOW CONNECTOR)
RRA 14 YEL	GENERAL SWITCH	GENERAL LAMP

WIRE IDENTIFICATION CHART

CODE/COLOR	FROM:	TO:
RRB 14 YEL	GENERAL SWITCH	GENERAL LAMP
RRC 14 YEL	GENERAL SWITCH	GENERAL LAMP
RRD 14 YEL	GALLEY CEILING FAN SWITCH	GALLEY CEILING FAN
RRE 14 YEL	10 OHM RESISTOR	LOUNGE CEILING FAN (LOW SPEED)
RRF 14 YEL	BEDROOM READING LAMP SWITCH	BEDROOM READING LAMP
RRG 14 YEL	BEDROOM READING LAMP SWITCH #1 (2 SWITCH SYSTEM)	BEDROOM READING LAMP SWITCH #2 (2 SWITCH SYSTEM)
RRH 14 YEL	BEDROOM READING LAMP SWITCH #1 (2 SWITCH SYSTEM)	BEDROOM READING LAMP SWITCH #2 (2 SWITCH SYSTEM)
RRJ 12 WHT	SEVEN PIN CONNECTOR (TRAILER CONNECTOR)	GROUND
RRK 16 YEL	2ND GALLEY HOLDING TANK	SELECTOR SWITCH
RRL 16 YEL	HOLDING TANK SELECTOR SWITCH	MONITOR PANEL
RRM 14 YEL	CENTER POWER SUNVISOR SWITCH	CENTER SUNVISOR
RRN 14 YEL	CENTER POWER SUNVISOR SWITCH	CENTER SUNVISOR
RRP 16 YEL	THERMOSTAT (LOW STAGE)	FURNACE (LOW STAGE)
RRR 16 YEL	THERMOSTAT (HIGH STAGE)	FURNACE (HIGH STAGE)
RRS 16 YEL	SLIDEOUT LOCK SWITCH (#1)	SLIDEOUT LOCK SWITCH (#2)
RRT 16 YEL	AWNING CONTROL BOX (LOCATED IN HOUSING PIN 1)	DOOR AWNING LIMIT SWITCH (LOCATED IN HOUSING PIN 1)
RRU 16 WHT	AWNING CONTROL BOX (LOCATED IN HOUSING PIN 2)	DOOR AWNING LIMIT SWITCH (LOCATED IN HOUSING PIN 2)
RRV 14 YEL	VIDEO CAMERA SWITCHER	MONITOR
RRW 14 YEL	LOCKOUT POSITIONING SWITCH	FIREPLACE LOCKOUT RECP

WIRE IDENTIFICATION CHART

CODE/COLOR	FROM:	TO:
RRX 10 YEL	12V BREAKER PANEL (30 AMP TYPICAL)	SMART FUSE BLOCK (POSITIVE)
RRY 18 YEL	SMART FUSE BLOCK (COMMUNICATION BUS)	SMART FUSE SWITCH PANEL
RRZ 18 WHT	SMART FUSE BLOCK (COMMUNICATION GROUND)	SMART FUSE SWITCH PANEL
SSA 14 WHT	FRONT LEFT SLIDE LOCK (INDICATOR OUTPUT-GROUND)	FRONT LEFT LOCK SWITCH LED
SSB 14 WHT	FRONT RIGHT SLIDE LOCK (INDICATOR OUTPUT-GROUND)	FRONT RIGHT LOCK SWITCH LED
SSC 14 YEL	JACK CONTROL PANEL (LEVEL)	REMOTE AUTO LEVEL SWITCH
SSD 14 YEL	JACK CONTROL PANEL (STORE)	REMOTE AUTO LEVEL SWITCH
SSE 14 YEL	JACK CONTROL PANEL (COMMON)	REMOTE AUTO LEVEL SWITCH (+)HWH (-)KWIKEE
SSF 14 YEL	JACK CONTROL PANEL (INDICATOR LED)	REMOTE AUTO LEVEL SWITCH (-)HWH (+)KWIKEE
SSG 18 YEL	TRANSFORMER	AUTO GENERATOR START MONITOR PANEL
SSH 18 WHT	TRANSFORMER	AUTO GENERATOR START MONITOR PANEL
SSJ 10 YEL	BRAKE CONTROLLER POWER (30-AMP BREAKER TYPICAL)	BRAKE CONTROLLER (POWER INPUT)
SSK 14 WHT	BRAKE CONTROLLER (GROUND)	GROUND
SSL 14 YEL	CHASSIS REAR LAMP WIRING (LEFT TURN ONLY)	LEFT TURN SIGNAL *NOT COMBO TURN/BRAKE*
SSM 14 YEL	CHASSIS REAR LAMP WIRING (RIGHT TURN ONLY)	RIGHT TURN SIGNAL *NOT COMBO TURN/BRAKE*
SSN 18 WHT	FRONT RIGHT SLIDEOUT LOCK END SWITCH (FROM NNS)	CONTROL MODULE (RIGHT FRONT SLIDE)(GROUND)
SSP 18 WHT	LEFT FRONT SLIDEOUT LOCK END SWITCH (FROM DS)	CONTROL MODULE (LEFT FRONT SLIDE)(GROUND)
SSR 16 YEL	EXTERIOR HOLDING TANK SELECTOR SWITCH	EXTERIOR MONITOR PANEL
SSS 16 YEL	EXTERIOR HOLDING TANK SELECTOR SWITCH	2ND GALLEY HOLDING TANK

WIRE IDENTIFICATION CHART

CODE/COLOR	FROM:	TO:
SST 14 YEL	GALLEY LAMP SWITCH #1	GALLEY LAMP SWITCH #2
SSU 14 YEL	GALLEY LAMP SWITCH #1	GALLEY LAMP SWITCH #2
SSV 14 YEL	BATH CEILING LAMP SWITCH #1 (2 SWITCH SYSTEM)	BATH CEILING LAMP SWITCH #2 (2 SWITCH SYSTEM)
SSW 14 YEL	BATH CEILING LAMP SWITCH #1 (2 SWITCH SYSTEM)	BATH CEILING LAMP SWITCH #2 (2 SWITCH SYSTEM)
SSX 12 YEL	DOOR AWNING SWITCH	DOOR AWNING CONTROL RELAY (RELAY POSITION 87A EXTEND)
SSY 12 WHT	DOOR AWNING SWITCH	DOOR AWNING LIMIT SWITCH
SSZ 14 YEL	LOUNGE CEILING ROPE LAMP SWITCH (CIRCUIT #2)	LOUNGE CEILING ROPE LAMP (REF CIRCUIT KKP)
TTA 14 YEL	LEVELING SYSTEM CONTROLS	INDICATOR LAMP/ALARM (POSITIVE)
TTB 14 WHT	LEVELING SYSTEM CONTROLS	INDICATOR LAMP/ALARM (NEGATIVE)
TTC 10 YEL	CHASSIS BATTERY	SLIDEOUT LOCK BREAKER
TTD 14 YEL	VEHICLE LEFT HEADLAMP HI BEAM CIRCUIT	LEFT HI BEAM LAMP
TTE 14 YEL	RELAY	RIGHT DOCKING LAMP
TTF 14 YEL	RELAY	LEFT DOCKING LAMP
TTG 18 YEL	FRONT THERMOSTAT (MAIN)	REMOTE SENSOR
TTH 18 YEL	FRONT THERMOSTAT (MAIN)	REMOTE SENSOR
TTJ 14 YEL	BRAKE LAMP CIRCUIT BREAKER	BRAKE LAMP RELAY
TTK 14 YEL	RIGHT TURNLAMP CIRCUIT BREAKER	RIGHT TURN LAMP RELAY
TTL 14 YEL	LEFT TURN LAMP CIRCUIT BREAKER	LEFT TURN LAMP RELAY
TTM 14 YEL	BACKUP LAMP CIRCUIT BREAKER	BACKUP LAMP RELAY

WIRE IDENTIFICATION CHART

CODE/COLOR	FROM:	TO:
TTN 14 YEL	PARK LAMP CIRCUIT BREAKER	PARK LAMP RELAY
TTP 12 YEL	AWNING CONTROL BOX	PATIO AWNING #2 (MOTOR POSITIVE)
TTR 12 WHT	AWNING CONTROL BOX	PATIO AWNING #2 (MOTOR GROUND)
TTS 16 YEL	AWNING CONTROL BOX	PATIO AWNING #2 (SWITCH EXTEND)
TTT 16 YEL	AWNING CONTROL BOX	PATIO AWNING #2 (SWITCH COMMON)
TTU 16 YEL	AWNING CONTROL BOX	PATIO AWNING #2 (SWITCH RETRACT)
TTV 16 YEL	AWNING CONTROL BOX	WIND SENSOR #2 (POSITIVE)
TTW 16 YEL	AWNING CONTROL BOX	WIND SENSOR #2 (NEGATIVE)
TTX 16 YEL	AWNING CONTROL BOX	WIND SENSOR #2 (SPEED OUTPUT)
TTY 18 YEL	CHASSIS BATT DISCONNECT RELAY (TERMINAL I)	CHASSIS BATT DISCONNECT SWITCH
TTZ 18 YEL	CHASSIS BATT DISCONNECT RELAY (TERMINAL S)	CHASSIS BATT DISCONNECT SWITCH
UUA 18 YEL	CHASSIS BATT DISCONNECT RELAY LOAD SIDE FUSE FEED	CHASSIS BATT DISCONNECT SWITCH INDICATOR LAMP
UUB 18 YEL	CHASSIS BATT DISCONNECT RELAY BATTERY SIDE FUSE FEED	CHASSIS BATT DISCONNECT SWITCH
UUC 18 WHT	CHASSIS BATT DISCONNECT SWITCH	GROUND
UUD 12 YEL	RIGHT REAR SLIDEOUT LOCK SWITCH	RIGHT REAR SLIDEOUT LOCK MOTOR
UUE 12 YEL	RIGHT REAR SLIDEOUT LOCK SWITCH	RIGHT REAR SLIDEOUT LOCK MOTOR