Table of Contents

2004 Journey/Meridian P34H Wiring Diagram Book

110 Volt Load Center/Auto Transfer Switch
AC/Heat/EMS Wiring Diagram
Antenna Installation, Radio and CB
Auto Lamps Wiring Diagram
Automotive Wiring Diagram
Backup Monitor Installation
Body, 110 Volt Wiring Diagram
Body, 110 Volt Wiring Installation
Body, 12 Volt Wiring Diagram
Body, 12 Volt Wiring Installation
Chassis Wiring Installation
Dash Radio Installation
Exterior Lamps Wiring Installation
Front End Wiring Installation
GPS Wiring Installation
Holding Tank Monitor Panel
Holding Tanks Wiring Diagram
Trip Computer Wiring Installation
TV Coax Wiring Diagram
TV/VCR, Front Wiring Installation

Electrical Parts Identification List
Wiring Identification Guide

Complete Wiring Diagram Book (701674-73-034)

Copyright © 2003 Winnebago Industries, Inc.

DANGER

Danger of electrical shock, burns or death. Always remove all power sources before attempting any repair, service or diagnostic work. Power can be present from shore power, generator, inverter or battery. All power sources must be disabled and secured before performing any service.

CAUTION

If you lack the skills, tools or equipment to perform diagnostic or repair work leave such work to an authorized Winnebago Industries dealer or other qualified shop.

Copyright © 2005 Winnebago Industries, Inc.

		P32T	P34H	P36G	P39K	P39W	
RED	12-UL	136135-07-053	136135-07-053	136135-07-053	136135-07-053	136135-07-053	
	12-CA	136136-07-053	136136-07-053	136136-07-053	136136-07-053	136136-07-053	
MAIN	6-3 UL	136139-01-027	136139-01-033	136139-01-030	136139-01-027	136139-01-027	39C
	6-3 CA	136140-01-027	136140-01-033	136140-01-030	136140-01-027	136140-01-027	39C
	4-3 UL	136141-01-027	136141-01-033	136141-01-030	136141-01-027	136141-01-027	67Q
	4-3 CA	136142-01-027	136142-01-033	136142-01-030	136142-01-027	136142-01-027	67Q
GRN	12-UL	136135-08-053	136135-08-053	136135-08-053	136135-08-053	136135-08-053	
	12-CA	136136-08-053	136136-08-053	136136-08-053	136136-08-053	136136-08-053	
INVERTER CHARGER MAIN	10-UL	136137-01-035	136137-01-035	136137-01-035	136137-01-035	136137-01-035	13X
	10-CA	136138-01-035	136138-01-035	136138-01-035	136138-01-035	136138-01-035	13X
YEL	14-UL	136131-05-086	136131-05-075	136131-05-072	136131-05-065	136131-05-075	13B
	14-CA	136134-05-086	136134-05-075	136134-05-072	136134-05-065	136134-05-075	13B
YEL-2	14-UL	136131-05-070	136131-05-075	136131-05-072	136131-05-065	136131-05-075	144 15U 79W
	14-CA	136134-05-070	136134-05-075	136134-05-072	136134-05-065	136134-05-075	144 15U 79W
GLD	12-UL	X	136135-10-096	136135-10-055	136135-10-130	136135-10-065	21M 54E
	12-CA	X	136136-10-096	136136-10-055	136136-10-130	136136-10-065	21M 54E
WHT	12 UL	136135-09-030	136135-09-030	136135-09-030	136135-09-030	136135-09-030	1B2
	12 CA	136136-09-030	136136-09-030	136136-09-030	136136-09-030	136136-09-030	1B2
INVERTER CHARGER SUB	10-UL	136137-01-035	136137-01-035	136137-01-035	136137-01-035	136137-01-035	13X
	10-CA	136138-01-035	136138-01-035	136138-01-035	136138-01-035	136138-01-035	13X
BLU	14-UL	136131-02-200	136131-02-170	136131-02-206	136131-02-165 △1	136131-02-230	
	14-CA	136134-02-200	136134-02-170	136134-02-206	136134-02-165 △1	136134-02-230	
BRN	14-UL	136131-03-130	136131-03-046	136131-03-106	136131-03-130 △1	136131-03-085	
	14-CA	136134-03-130	136134-03-046	136134-03-106	136134-03-130 △1	136134-03-085	
PUR	14-UL	136131-04-185	136131-04-151	136131-04-178	136131-04-200	136131-04-290	
	14-CA	136134-04-185	136134-04-151	136134-04-178	136134-04-200	136134-04-290	
BLK	14-UL	136131-06-093	136131-06-046	136131-06-075	136131-06-065 △1	136131-06-070	
	14-CA	136134-06-093	136134-06-046	136134-06-075	136134-06-065 △1	136134-06-070	

△1 SEE DETAIL BA FOR CONNECTOR INSTALLATION.

NOTES:

RELEASE	REV A	DATE	DWG NO 144991

REV	ZONE	REVISION RECORD	DATE	DFTR-ORIG

- 79W REFRIGERATOR-4 DOOR
- 67Q GEN-7.5KW-ONAN-QUIET DIESEL
- 13B INVERTER/CHARGER-DC/AC W/O
- 54E WASHER/DRYER
- 265 CODES/STANDARDS - CSA/CMVSS
- 21M WASHER/DRYER - PREP
- 1B1 CODES/STANDARDS - USA
- 39C GEN-6.5KW ONAN LP MARQ GOLD
- 15U REFRIGERATOR/FRZR W/ICEMAKER
- 13X INVERTER/CHARGER 2.0 KW
- 144 REFRIGERATOR - DOUBLE DOOR

1B1 265

WINNEBAGO

COPYRIGHT 2004 WINNEBAGO INDUSTRIES, INC.

DFTR | ORIG. DATE

CHKR | ALL DIMENSIONS ARE IN MILLIMETERS

P.E.

M.E. | FIRST USED

DSNR | 04 P-SERIES

UNSPECIFIED TOLERANCES ARE:

WHOLE DIM (X)	:	1
ONE-PLACE (X.X)	:	1.5
TWO-PLACE (X.XX)	:	0.50
ANGLE	:	1°

MATERIAL:

THIRD ANGLE PROJECTION

DO NOT SCALE DRAWING

TITLE: LOAD CENTER/ATS ASM

SHEET 1 OF 5 | PART NO 144991

DWG NO 144991

		P32T	P34H	P36G	P39K	P39W
GROUND MAIN		136145-01-023	136145-01-023	136145-01-023	136145-01-023	136145-01-023
GROUND SUB		136145-01-023	136145-01-023	136145-01-023	136145-01-023	136145-01-023
ATS GROUND		136145-01-020	136145-01-010	136145-01-010	136145-01-010	136145-01-010
INVERTER GROUND		136145-01-015	136145-01-010	136145-01-010	136145-01-010	136145-01-010
GENERATOR CABLE ASM	UL	136147-01-101	136147-01-105	X	X	X
	CA	136147-02-101	136147-02-105	X	X	X
GENERATOR CABLE ASM		X	----------	136148-01-119	136148-01-122	136148-01-122
		136148-02-101	136148-02-105	136148-02-119	136148-02-122	136148-02-122
THROW IN WIRE #1	14-UL	136131-03-070 (1)	136131-04-170	136131-03-085 (1)	136131-04-050 (1)	136131-04-060 (1)
	14-CA	136134-03-070 (1)	136134-04-170	136134-03-085 (1)	136134-04-050 (1)	136134-04-060 (1)
THROW IN WIRE #2	14-UL	136131-04-150	136131-03-040 (1)	136131-04-150	136131-04-006 (1)	136131-04-006 (1)
	14-CA	136134-04-150	136134-03-040 (1)	136134-04-150	136134-04-006 (1)	136134-04-006 (1)
THROW IN WIRE #3	14-UL	X	136131-06-020 (1)	----------	136131-02-085 (1)	136131-06-040 (1)
	14-CA	X	136134-06-020 (1)	----------	136134-02-085 (1)	136134-06-040 (1)
THROW IN WIRE #4	14-UL	X	---------	----------	X	136131-03-100 (1)
	14-CA	X	----------	----------	X	136134-03-100 (1)
SLIDEOUT #1 WIRE #1		136151-05-027 (2)	136151-03-017 (2)	136151-03-030 (2)	136151-03-027 (2)	136151-03-015 (2)
SLIDEOUT #1 WIRE #2		136151-03-027 (2)	136151-06-017 (2)	----------	X	136151-06-015 (2)
SLIDEOUT #2 WIRE #1		X	----------	----------	136151-04-020 (2)	136151-04-020 (2)
SLIDEOUT #3 WIRE #1		X	X	X	136151-02-017 (2)	X
SLIDEOUT #3 WIRE #2		X	X	X	136151-06-017 (2)	X

39C
39C
39C
67Q

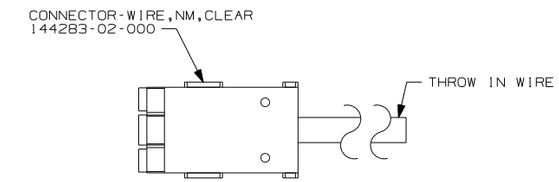

DETAIL BA

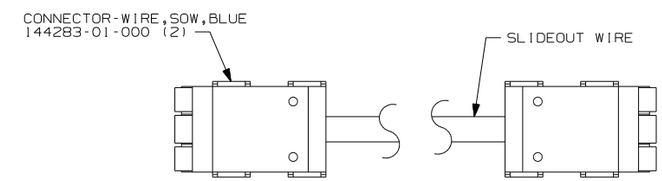

DETAIL BB

67Q GEN-7.5KW-ONAN-QUIET DIESEL
39C GEN-6.5KW ONAN LP MARQ GOLD
265 CODES/STANDARDS - CSA/CMVSS
181 CODES/STANDARDS - USA

181 265

(2) SEE DETAIL BB FOR CONNECTOR INSTALLATION.
(1) SEE DETAIL BA FOR CONNECTOR INSTALLATION.
NOTES:

FIRST USED 04 P-SERIES
DO NOT SCALE DRAWING
TITLE: LOAD CENTER/ATS ASM
SHEET 2 PART NO 144991

DWG NO 144991

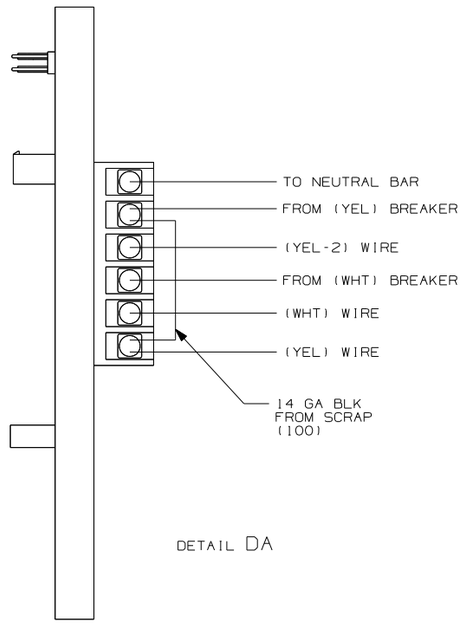

DETAIL DA

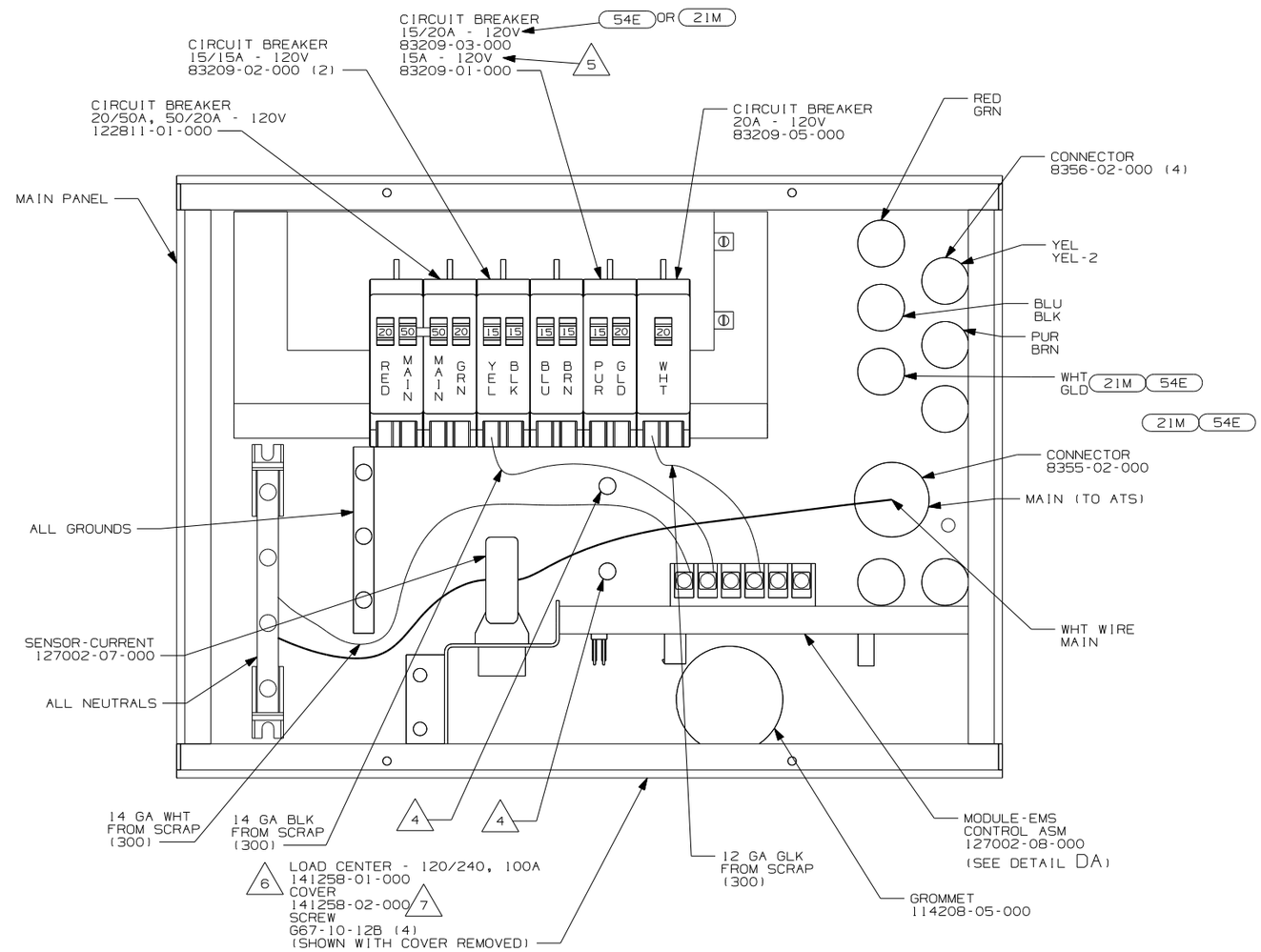

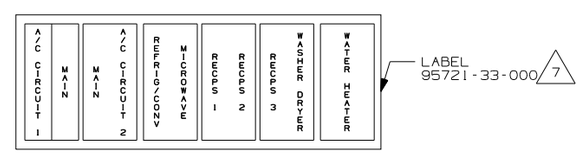

INSTALL LABEL ON FRONT PANEL BELOW BREAKERS BETWEEN MOUNTING HOLES

7 INSTALLED BY ASSEMBLY LINE.

6 ALL WIRES ARE TO BE 500MM LONG INSIDE OF BOX.

5 WITHOUT 54E OR 21M.

4 ATTACH WIRES TO BACKSIDE OF LOAD CENTER, USE EXISTING HOLES AND TIE-WIRE 116673-01-000.

3. ALL 110V STRANDED WIRE W/O TERMINALS TO BE STRIPPED 10MM AND SOLDER DIPPPED.

2. ALL WIRES ARE NOT SHOWN FOR CALARITY.

1. ALL GROUND WIRES TO BE COVERED WITH TUBING 8041-02-000.

13B INVERTER/CHARGER-DC/AC W/O

54E WASHER/DRYER

21M WASHER/DRYER PREP

265 CODES/STANDARDS-CSA/CMVSS

1B1 CODES/STANDARDS USA

1B1 265 13B

FOR ELECTRICAL TORQUE SPECIFICATIONS SEE DWG NO. 128783-01-000

X-X FOR ELECTRICAL CALLOUTS SEE DWG NO. 121339-01-000

FIRST USED 04 P-SERIES

DO NOT SCALE DRAWING

TITLE: LOAD CENTER/ATS ASM

SHEET 3 PART NO 144991

DWG NO 144991

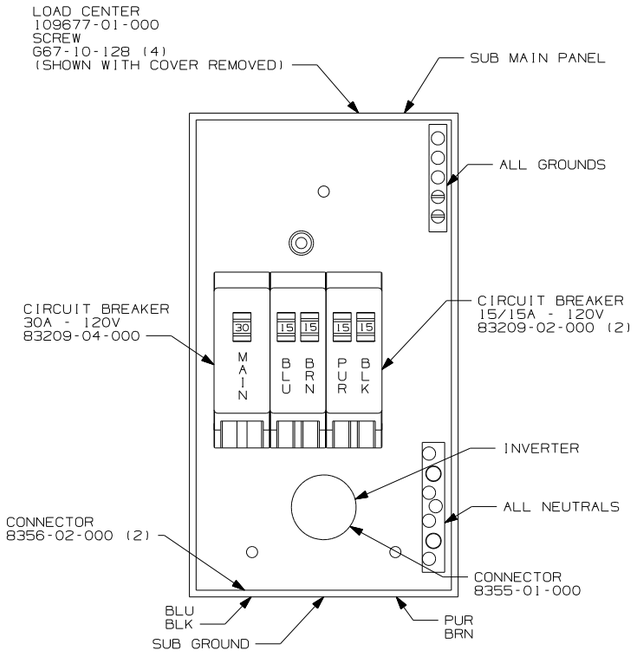

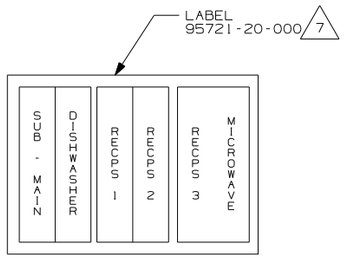

INSTALL LABEL
BELOW PANEL
ON CABINET DOOR

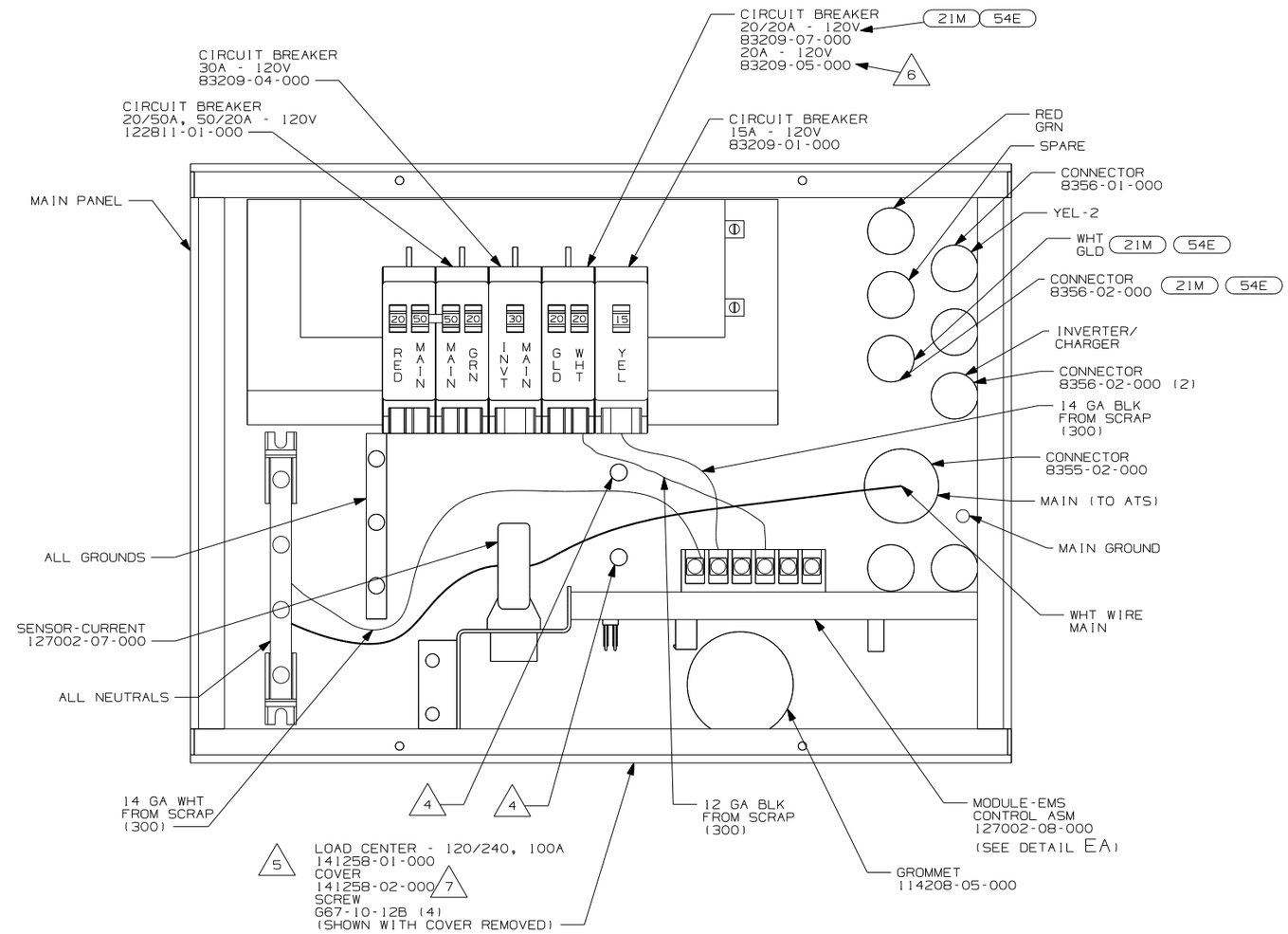

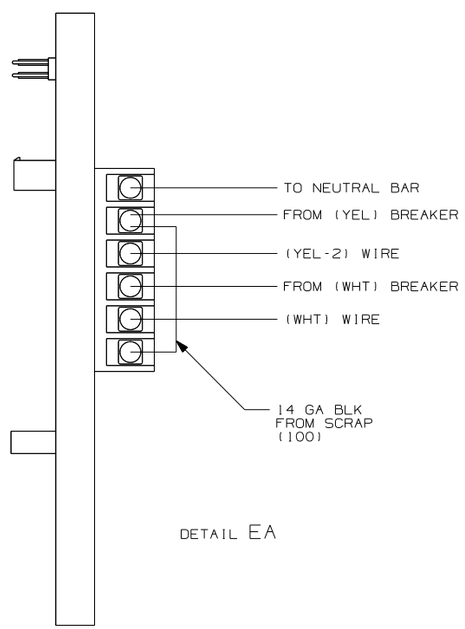

DETAIL EA

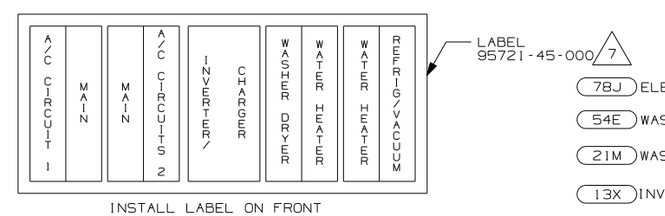

INSTALL LABEL ON FRONT
PANEL BELOW BREAKER
BETWEEN MOUNTING HOLES

78J ELECTRICAL SYSTEM-50 AMP

54E WASHER/DRYER

21M WASHER/DRYER PREP

13X INVERTER/CHARGER 2.0 KW

265 CODES/STANDARDS-CSA/CMVSS

1B1 CODES/STANDARDS USA

1B1 265 78J 13X

7 INSTALLED BY ASSEMBLY LINE.

6 WITHOUT 21M OR 54E

5 ALL WIRES ARE TO BE 500MM LONG INSIDE OF BOX.

4 ATTACH WIRES TO BACKSIDE OF LOAD CENTER, USE EXISTING HOLES AND TIE-WIRE 116673-01-000.

3. ALL 110V STRANDED WIRE W/O TERMINALS TO BE STRIPPED 10MM AND SOLDER DIPPED.

2. ALL WIRES ARE NOT SHOWN FOR CLARITY.

1. ALL GROUND WIRES TO BE COVERED WITH TUBING 8041-02-000.

NOTES:

FOR ELECTRICAL TORQUE SPECIFICATIONS SEE DWG NO. 128783-01-000

X-X FOR ELECTRICAL CALLOUTS SEE DWG NO. 121339-01-000

FIRST USED	04 P-SERIES
	DO NOT SCALE DRAWING
TITLE:	LOAD CENTER/ATS ASM
SHEET 4	PART NO 144991

DWG NO 144991

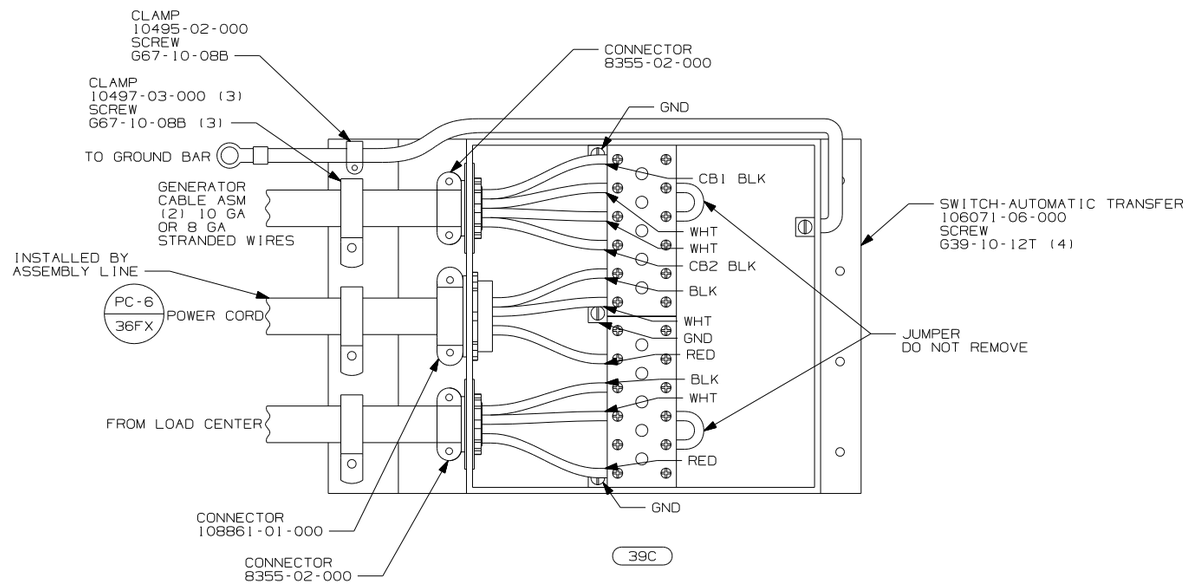

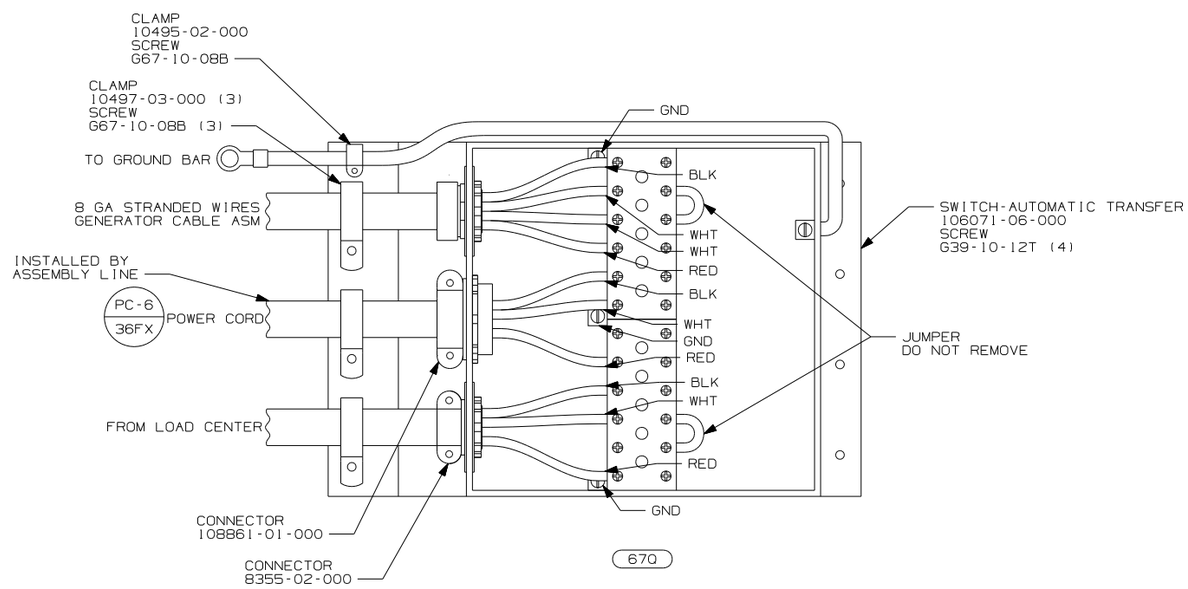

67Q GEN-7.5KW-ONAN-QUIET DIESEL

39C GEN-6.5KW ONAN LP MARQ GOLD

265 CODES/STANDARDS-CSA/CMVSS

1B1 CODES/STANDARDS USA

1B1 265

FIRST USED 04 P-SERIES

DO NOT SCALE DRAWING

TITLE: LOAD CENTER/ATS ASM

SHEET 5 PART NO 144991

FOR ELECTRICAL TORQUE SPECIFICATIONS SEE DWG NO. 128783-01-000

X-X FOR ELECTRICAL CALLOUTS SEE DWG NO. 121339-01-000

NOTES:

RELEASE	REV A	DATE	DWG NO 138913

REV	ZONE	REVISION RECORD	DATE	DFTR-ORIG

WITHOUT HEAT PUMP

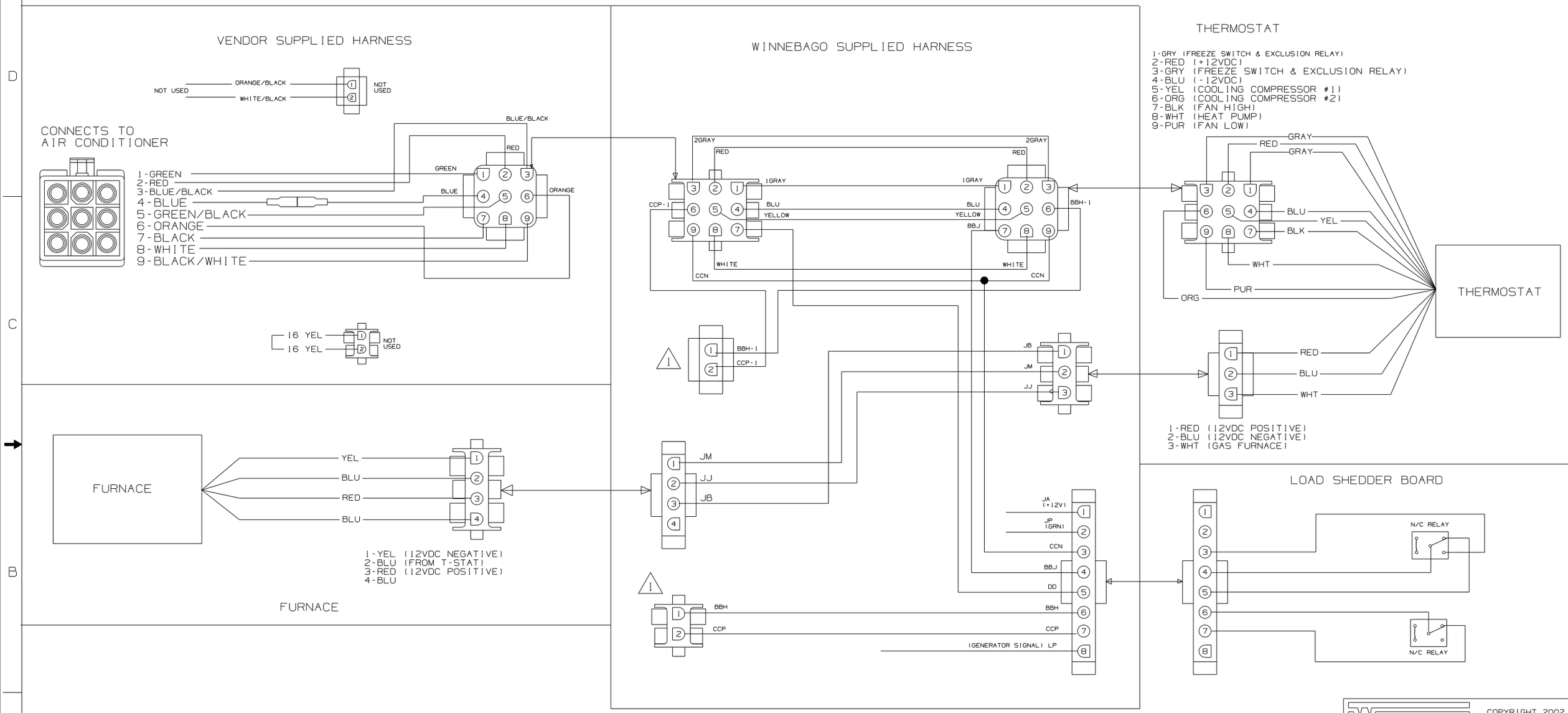

WIRING DIAGRAM-THERMOSTAT,EXT
(WIRE ASM 135131
WITHOUT HEAT PUMP)

1. CONNECT HOUSING TOGETHER.

NOTES:

COPYRIGHT 2002
WINNEBAGO
INDUSTRIES, INC.

DFTR	ORIG. DATE
CHKR	ALL DIMENSIONS ARE IN MILLIMETERS
P.E.	
M.E.	FIRST USED
DSNR	03 SERIES

UNSPECIFIED TOLERANCES ARE:
WHOLE DIM (X) :
ONE-PLACE (X.X) :
TWO-PLACE (X.XX) :
ANGLE :

MATERIAL:

THIRD ANGLE PROJECTION

DO NOT SCALE DRAWING

TITLE: WIRING DIAGRAM-AC/HEAT/EMS

SHEET 1 OF 2 | PART NO 138913

REF: 1 11/20/02

DWG NO 138913

WITH HEAT PUMP

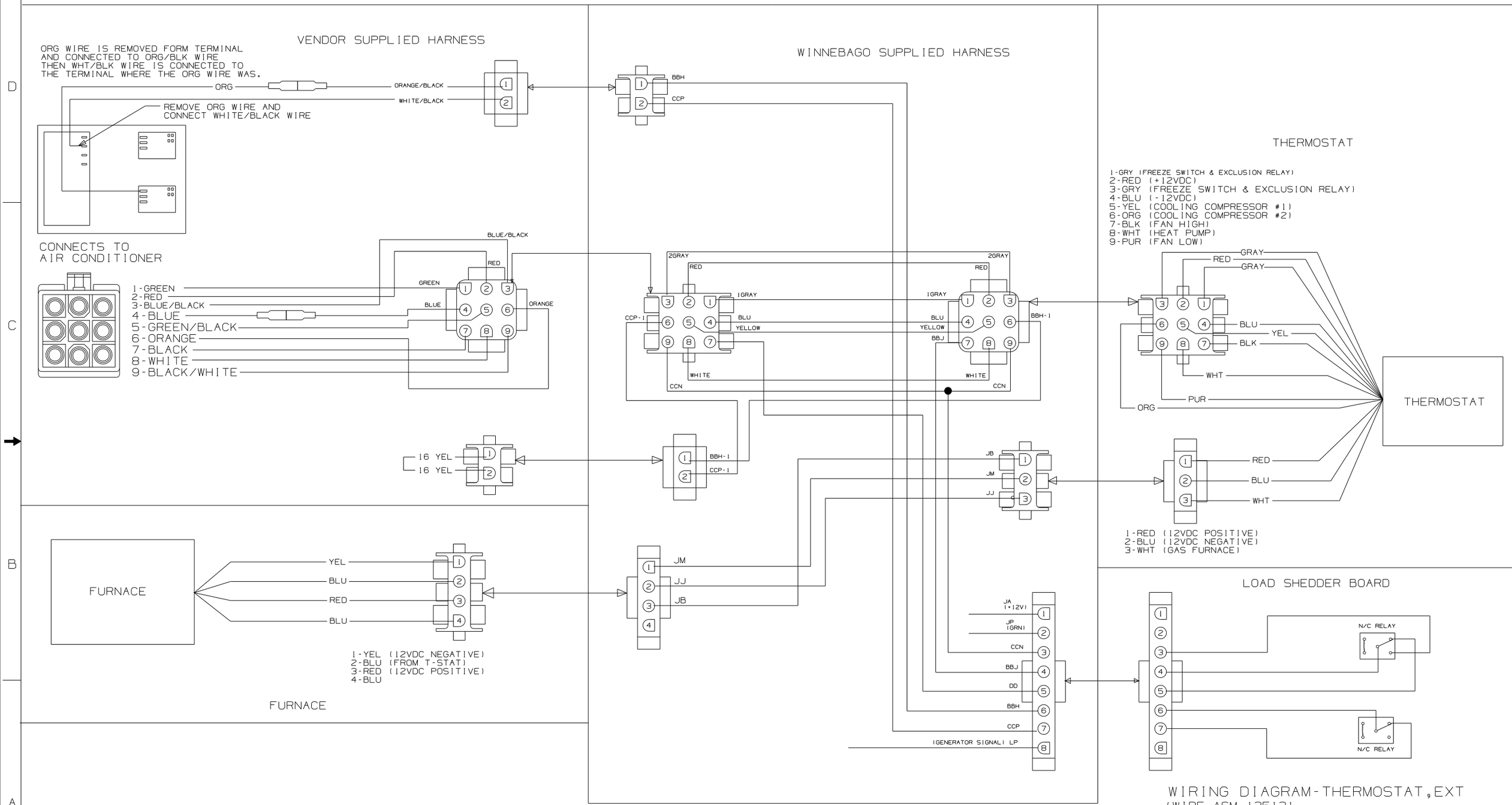

WIRING DIAGRAM-THERMOSTAT,EXT
(WIRE ASM 135131
WITH HEAT PUMP)

1. RLC FOR 2001 THIS RESET WAS DELETED.

NOTES:

FIRST USED	03 SERIES
	DO NOT SCALE DRAWING
TITLE:	WIRING DIAGRAM-AC/HEAT/EMS
SHEET 2	PART NO 138913

DWG NO	SHEET
145114-01	1
145114-02	2
145114-03	3

RELEASE	REV A	DATE	DWG NO 145114

REV	ZONE	REVISION RECORD	DATE	DFTR-ORIG

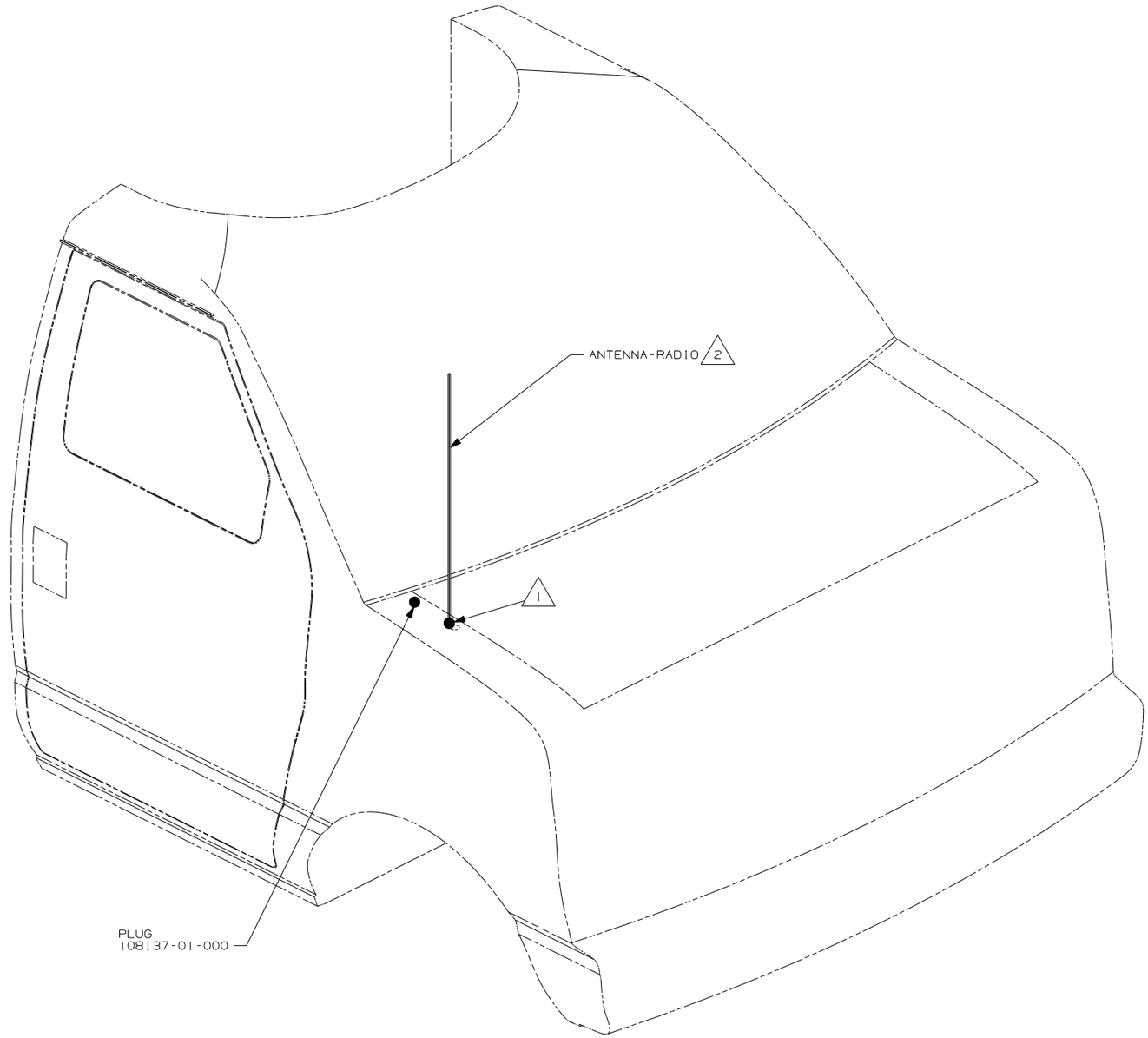

14 SEE WIRING INSTL-FRONT END FOR ADDITIONAL INFORMATION.

13 MOUNT ANTENNA SUCH THAT BASE IS SQUARE W/ REAR OF ROOF CAP & HOLE IS DIRECTLY OVER HOLE IN FIBERGLASS. SEAL HOLE IN ROOF CAP, BASE AT SCREWS.

12 TAPE CABLE EXTENSION TO CABLE ANTENNA AT CONNECTION, USE TAPE 8363-01-000.

11 USE HOLE IN BRACKET AS GUIDE TO DRILL 13 DIAMETER HOLE IN FIBERGLASS.

10 TO RADIO.

9 ATTACH ANTENNA-CB GROUND WIRE TO CAB FRAME, USE SCREW G39-08-08B.

8 SEAL AROUND ANTENNA BASE.

7 ROUTE CABLE ALONG A-POST,UNDER TRIM COVER.

6 40J CB PREP

5 MEASURED FROM REAR EDGE OF FIBERGLASS CAP.

4 SEE WIRING INSTL-FRONT END FOR LOCATION OF COAX END AND LABEL.

3 DO NOT RELOCATE ANTENNA ON SHELLS.

2 SUPPLIED WITH CHASSIS.

1 SEE FRAME ASM-CHASSIS FOR HOLE LOCATION AND SIZE.

NOTES:

FORD CHASSIS
300 SERIES
EXCEPT SHELLS

WINNEBAGO INDUSTRIES

COPYRIGHT 2005
WINNEBAGO
INDUSTRIES, INC.

DFTR	ORIG. DATE
CHKR	ALL DIMENSIONS ARE IN MILLIMETERS
P.E.	
M.E.	FIRST USED
DSNR	04 MOTORHOMES

UNSPECIFIED TOLERANCES ARE:
WHOLE DIM (X) :
ONE-PLACE (X.X) :
TWO-PLACE (X.XX) :
ANGLE :

THIRD ANGLE PROJECTION

MATERIAL:

DO NOT SCALE DRAWING

TITLE:
ANTENNA INSTL-RADIO AND CB

SHEET 1 OF 3 | PART NO 145114

REF:

DWG NO 145114

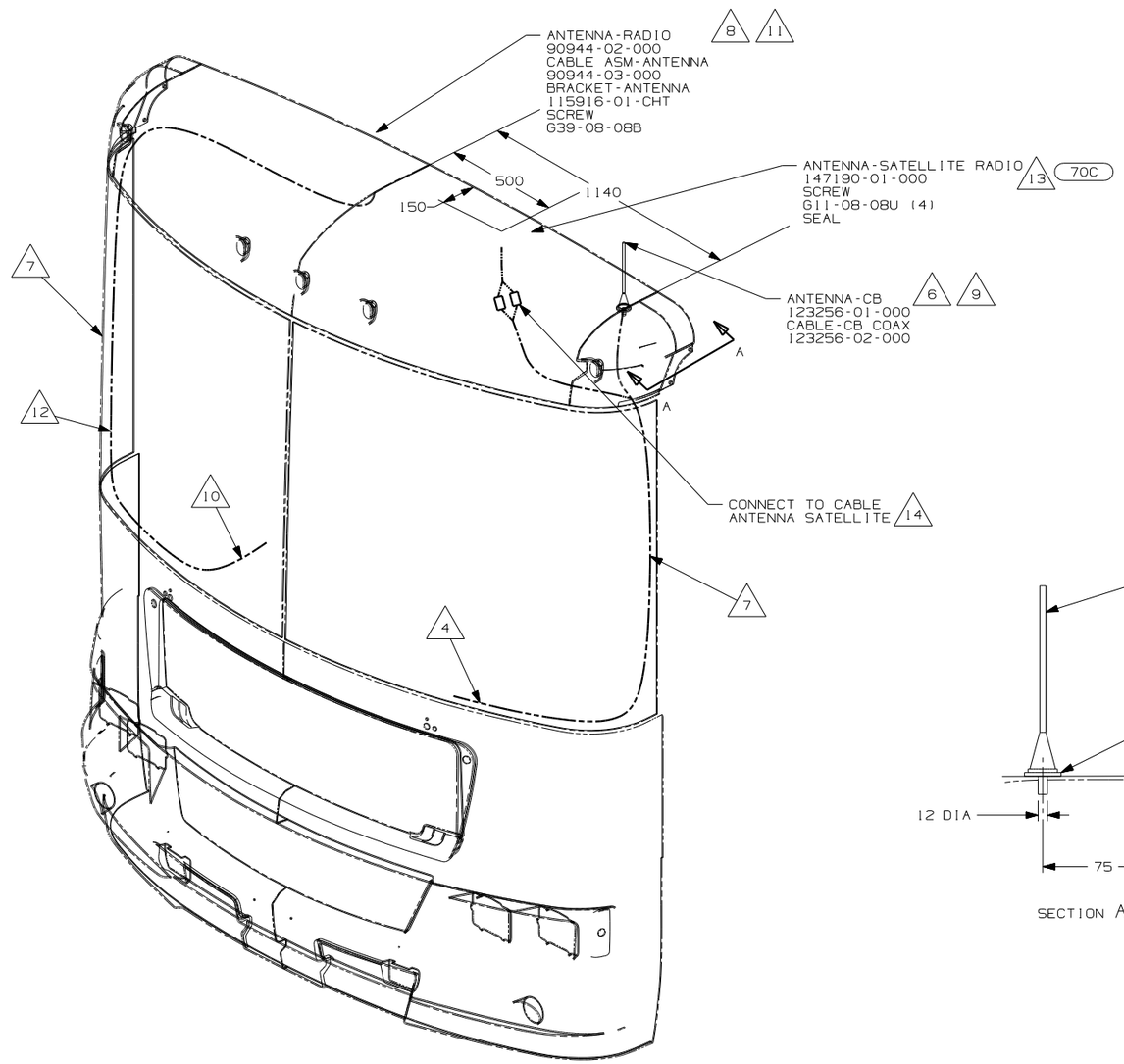

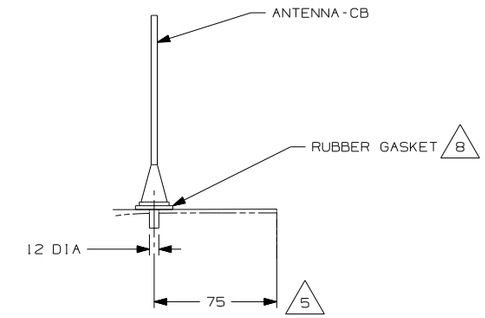

SECTION A

70C RADIO - SATELLITE

FIRST USED	D,L,F&G-SERIES,40J CB PREP
	DO NOT SCALE DRAWING
TITLE:	ANTENNA INSTL-RADIO AND CB
SHEET 2	PART NO 145114

DWG NO 145114

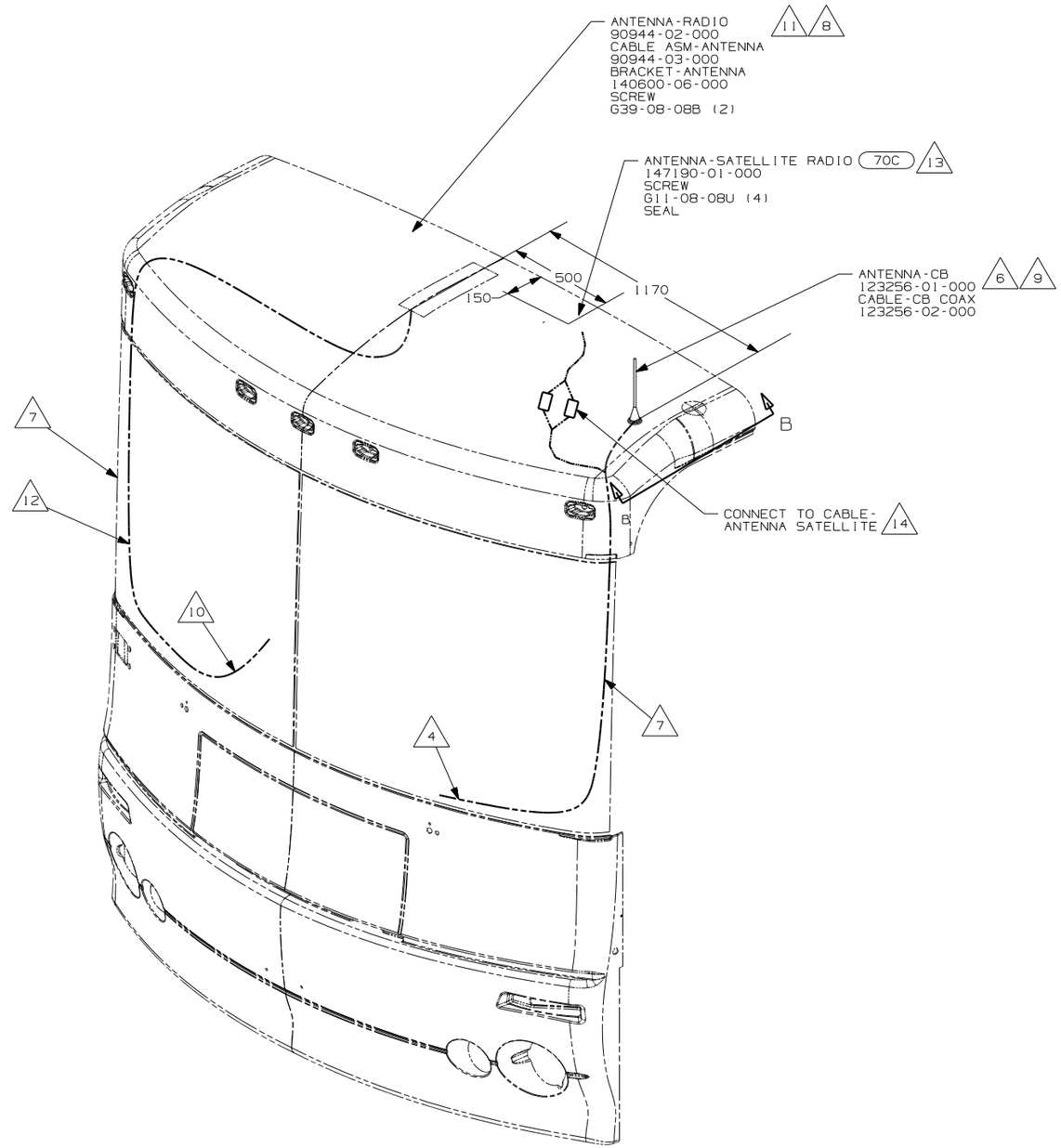

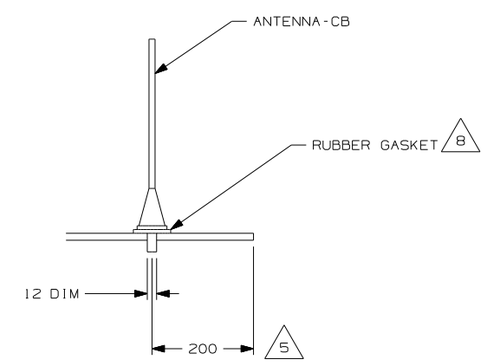

SECTION B

70C RADIO - SATELLITE

FIRST USED	P,Q & S-SERIES, 40J CB PREP
DO NOT SCALE DRAWING	
TITLE:	ANTENNA INSTL-RADIO AND CB
SHEET 3	PART NO 145114

RELEASE	REV A	DATE	DWG NO 144992
REV	ZONE	REVISION RECORD	DATE / DFTR-ORIG

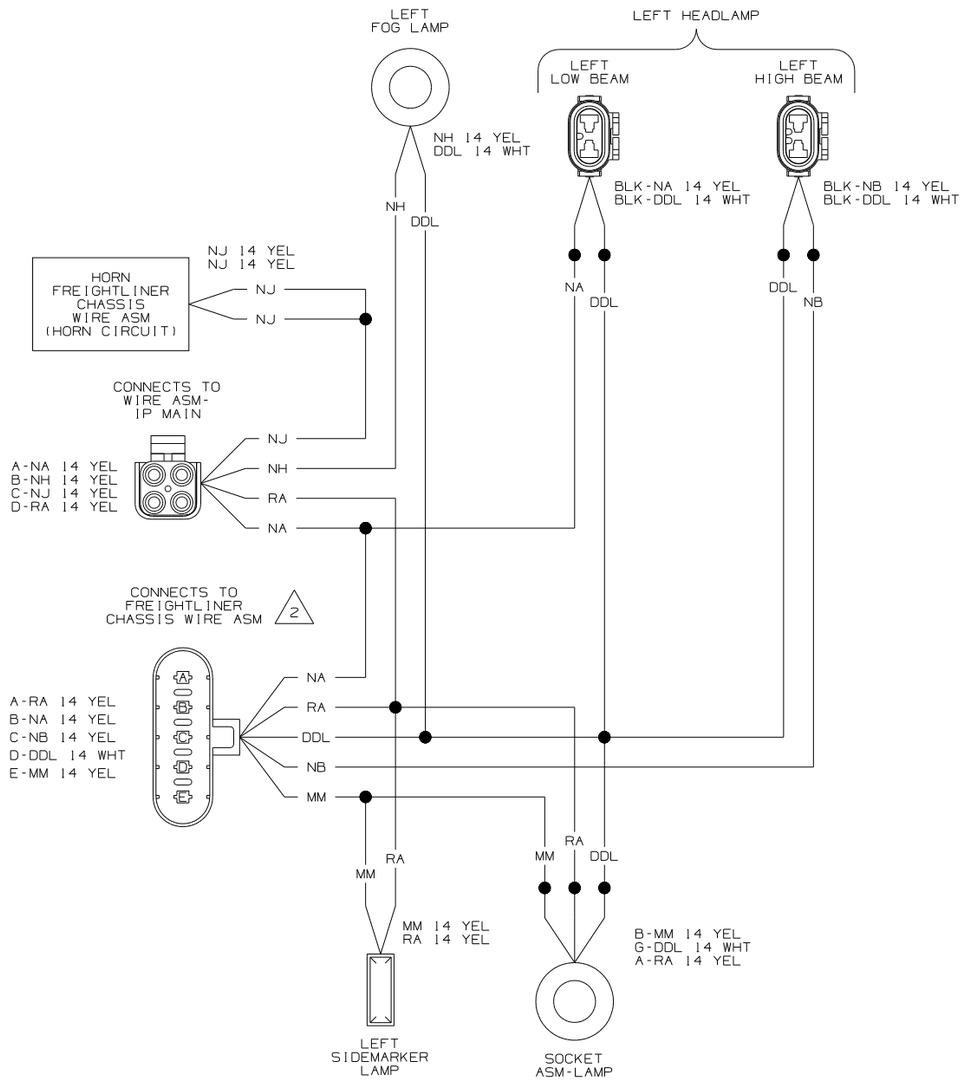

1 WIRING DIAGRAM-HEADLAMP
(WIRE ASM 144850-01 REV-D)

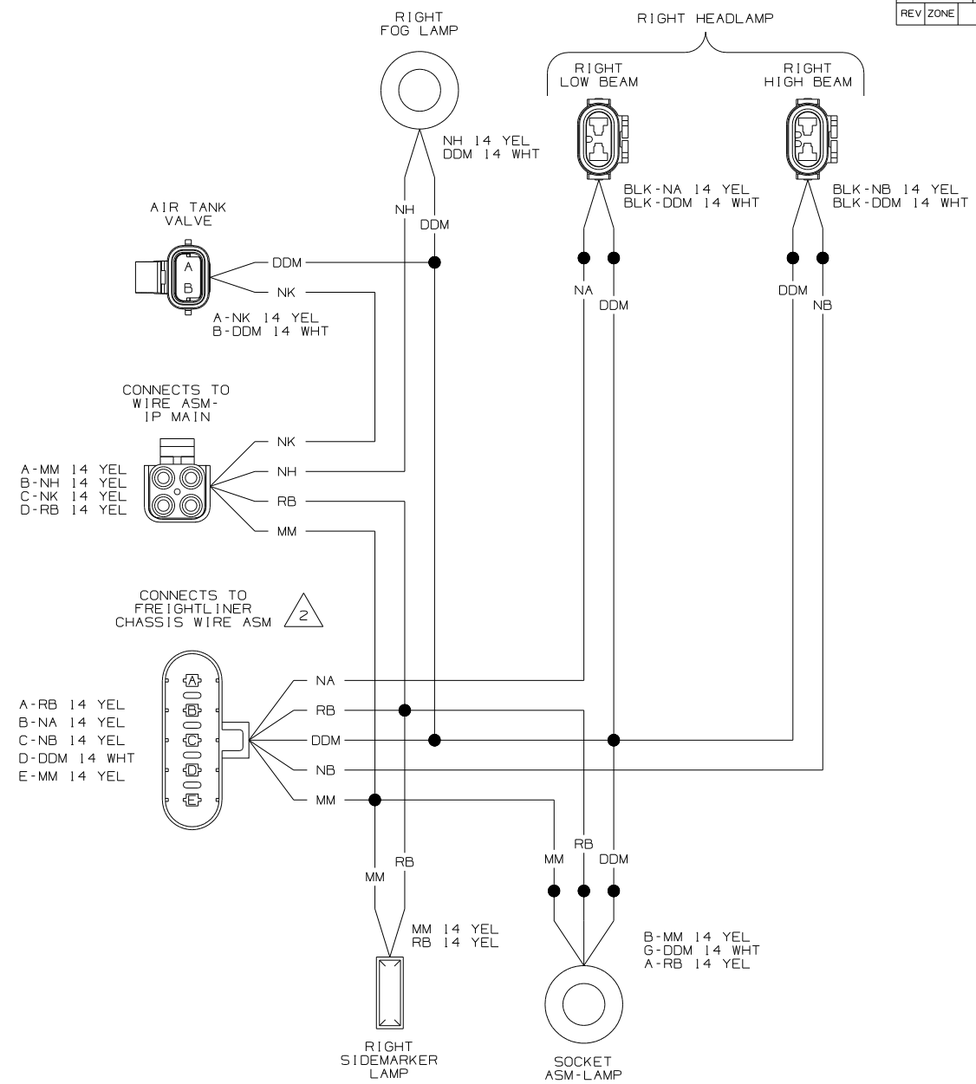

1 WIRING DIAGRAM-HEADLAMP
(WIRE ASM 144850-02 REV-D)

2 HOUSINGS LOOK DIFFERENT BETWEEN SYSTEM 3 AND MMDC WIRING, BUT THE LOADING IS THE SAME.

1 SYSTEM 3 WIRING

NOTES:

COPYRIGHT 2003
WINNEBAGO
INDUSTRIES, INC.

DFTR	ORIG. DATE
CHKR	ALL DIMENSIONS ARE IN MILLIMETERS
P.E.	
M.E.	FIRST USED 04 P-SERIES
DSNR	
UNSPECIFIED TOLERANCES ARE: WHOLE DIM (X) : ; ONE-PLACE (X.X) : ; TWO-PLACE (X.XX) : ; ANGLE :	MATERIAL:
THIRD ANGLE PROJECTION	

DO NOT SCALE DRAWING

TITLE: WIRING DIAGRAM-AUTO LAMPS

SHEET 1 OF 6 | PART NO 144992

DWG NO 144992

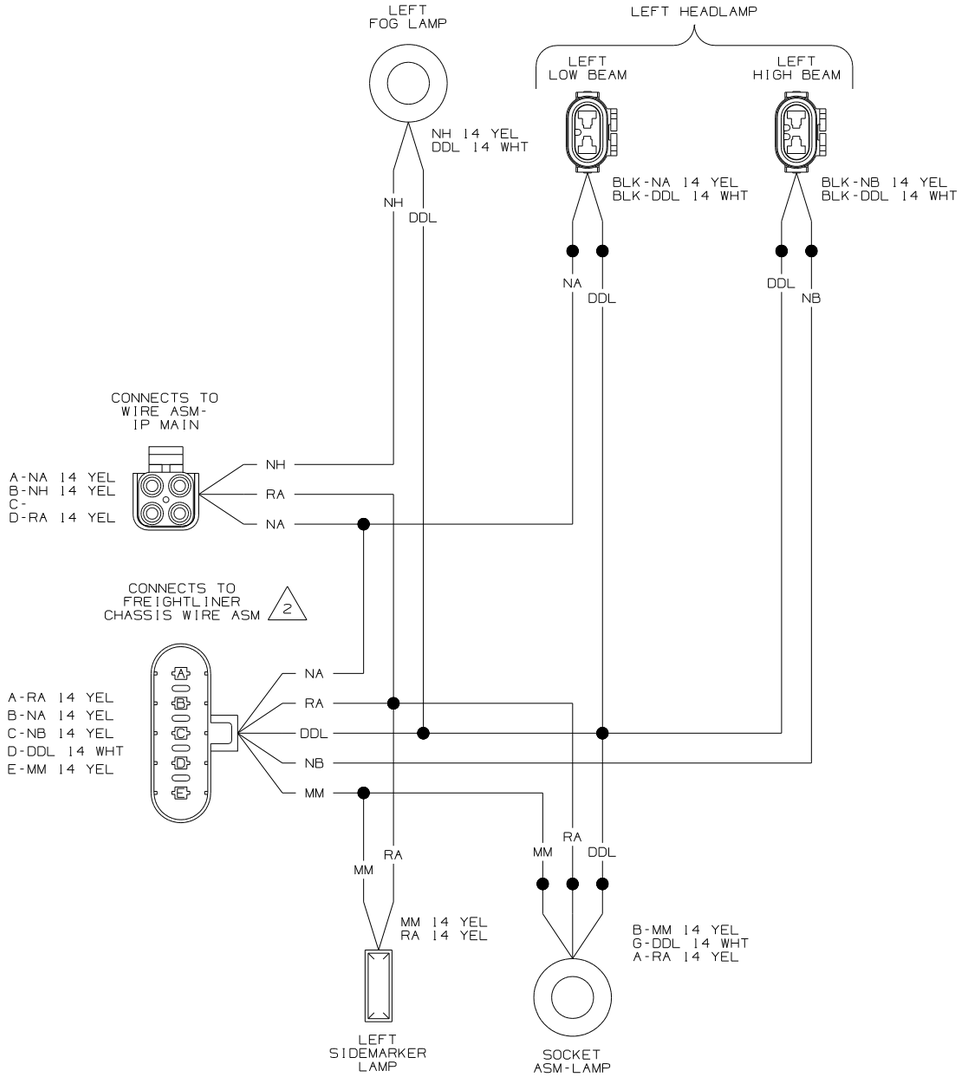

1 WIRING DIAGRAM-HEADLAMP
(WIRE ASM 144850-03 REV-D)

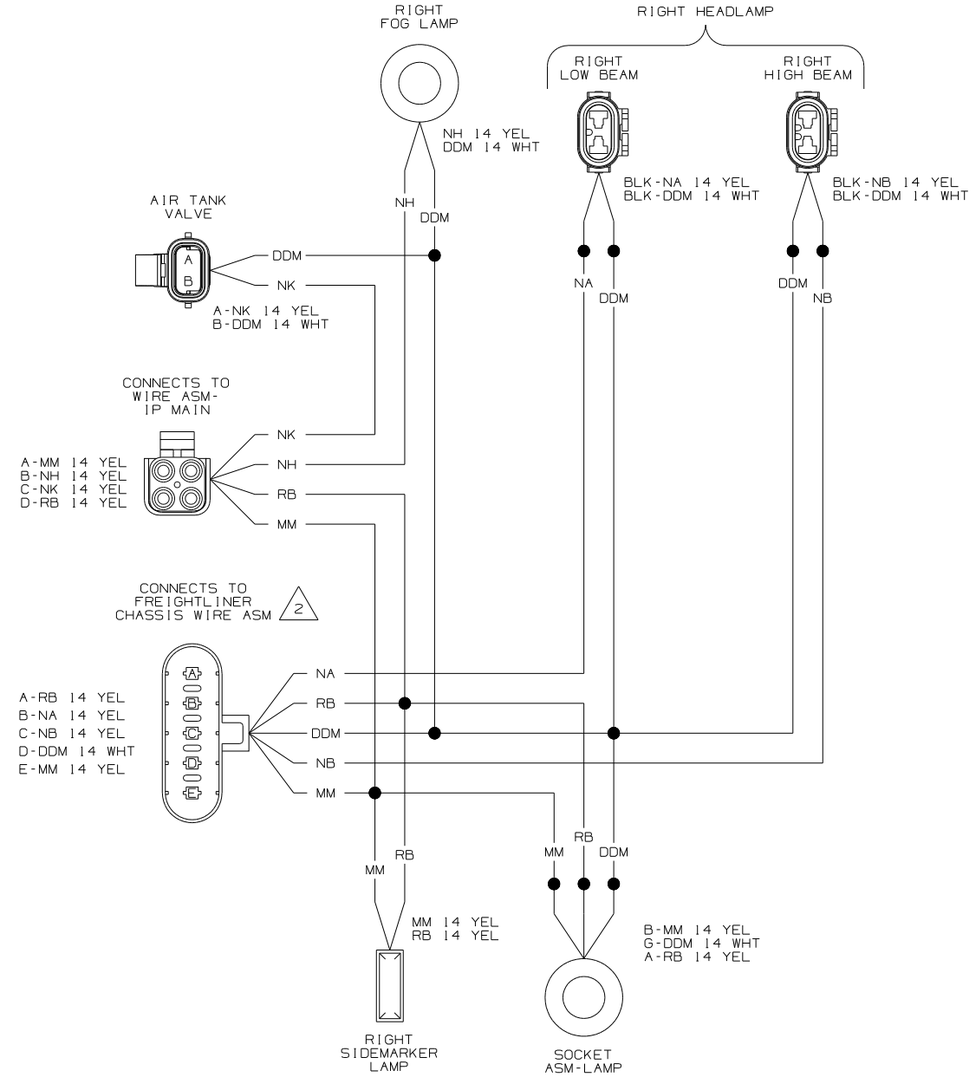

1 WIRING DIAGRAM-HEADLAMP
(WIRE ASM 144850-04 REV-D)

NOTES:

2 HOUSINGS LOOK DIFFERENT BETWEEN SYSTEM 3 AND MMDC WIRING, BUT THE LOADING IS THE SAME.

1 MMDC WIRING

FIRST USED	04 P-SERIES
	DO NOT SCALE DRAWING
TITLE:	WIRING DIAGRAM-AUTO LAMPS
SHEET 2	PART NO 144992

DWG NO 144992

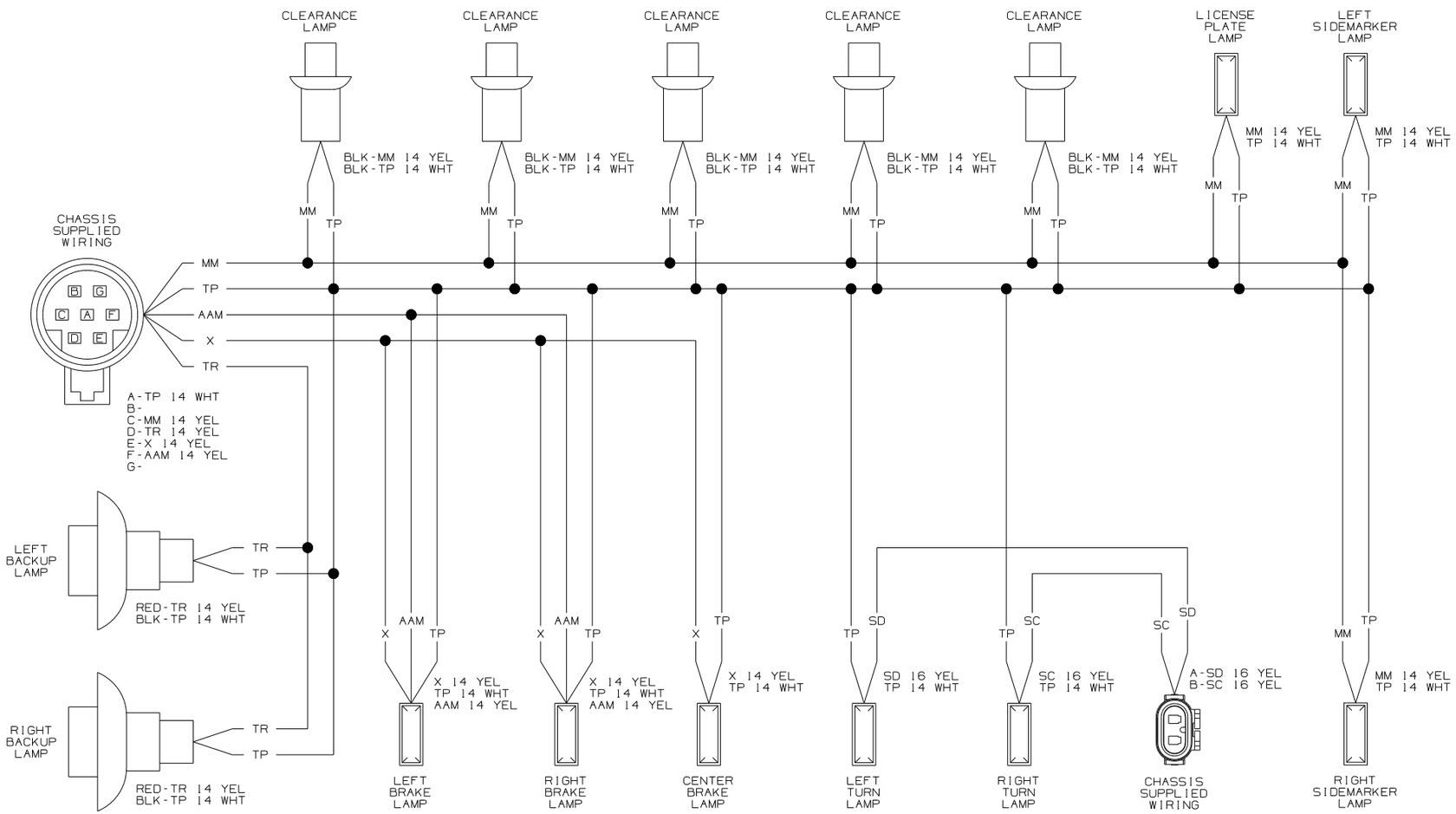

WIRING DIAGRAM-BACKWALL,FL
(WIRE ASM 146189-01 REV-C)
(WINN WITH SYSTEM 3 WIRING)

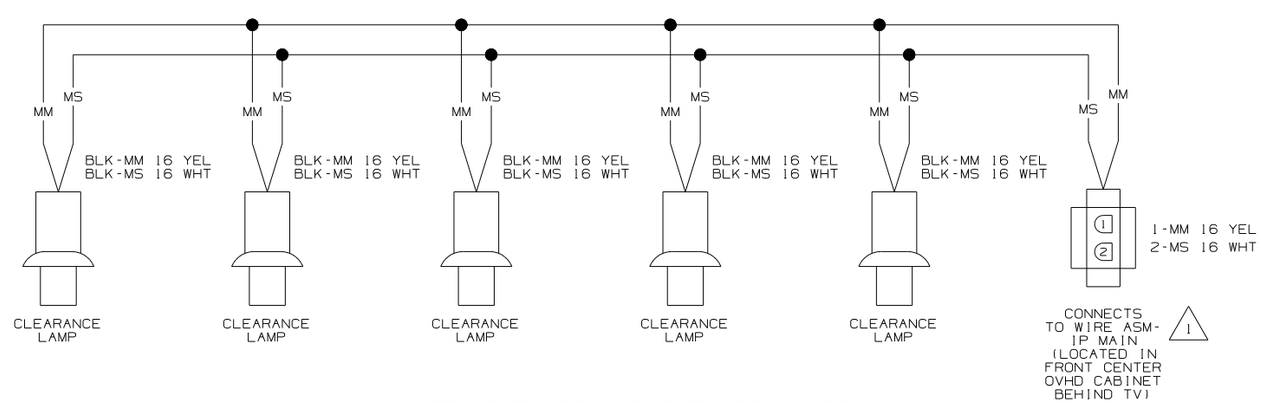

WIRING DIAGRAM-CLEARANCE LAMPS
(WIRE ASM 126486-03 REV-F)

1 SEE WIRING DIAGRAM-AUTO FOR ADDITIONAL INFORMATION.

NOTES:

FIRST USED 04 P-SERIES

DO NOT SCALE DRAWING

TITLE: WIRING DIAGRAM-AUTO LAMPS

SHEET 3 PART NO 144992

DWG NO 144992

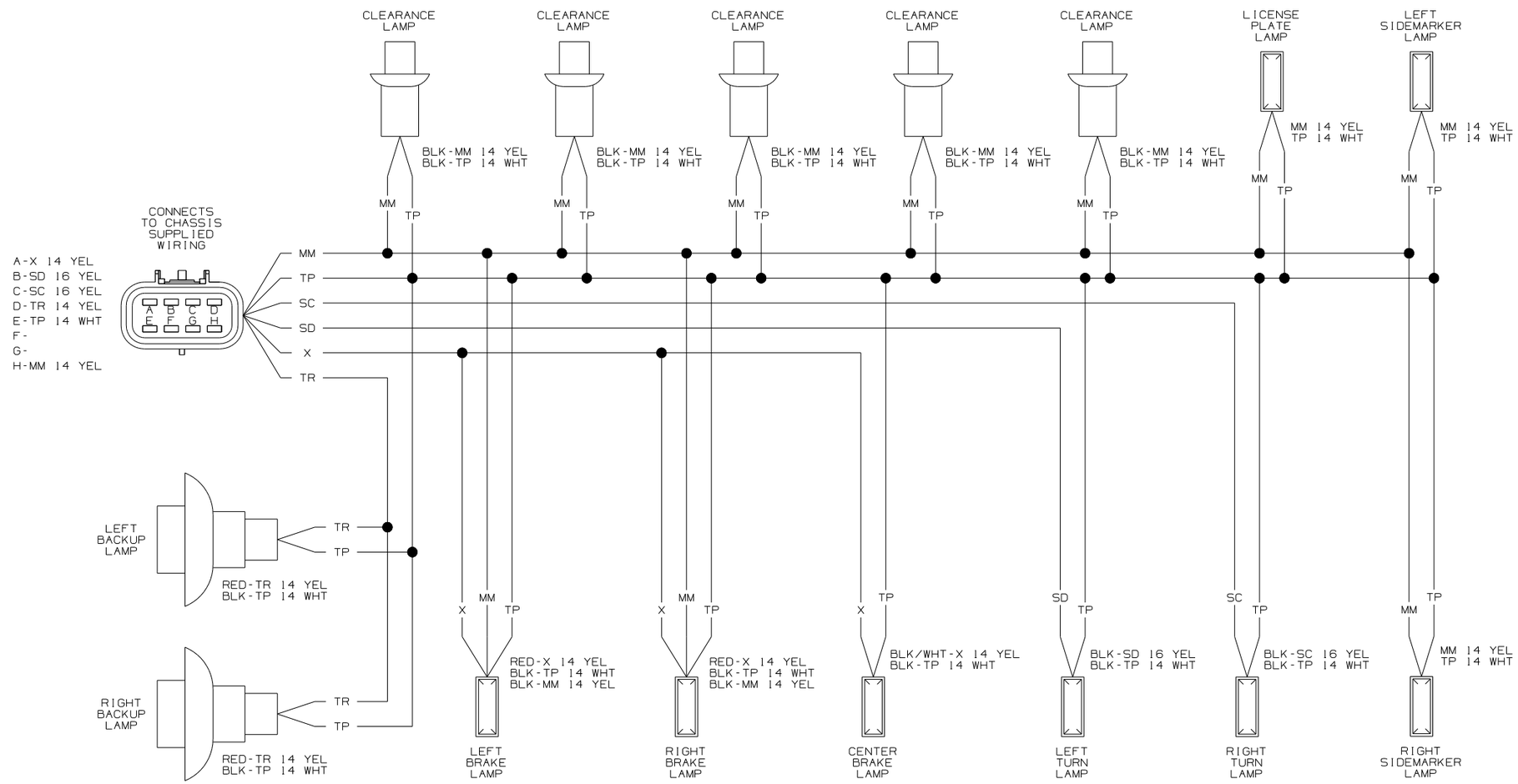

WIRING DIAGRAM-BACKWALL,FL
(WIRE ASM 146189-03 REV-C)
(WINN WITH MMDC WIRING)

FIRST USED	04 P-SERIES
DO NOT SCALE DRAWING	
TITLE: WIRING DIAGRAM-AUTO LAMPS	
SHEET 4	PART NO 144992

DWG NO 144992

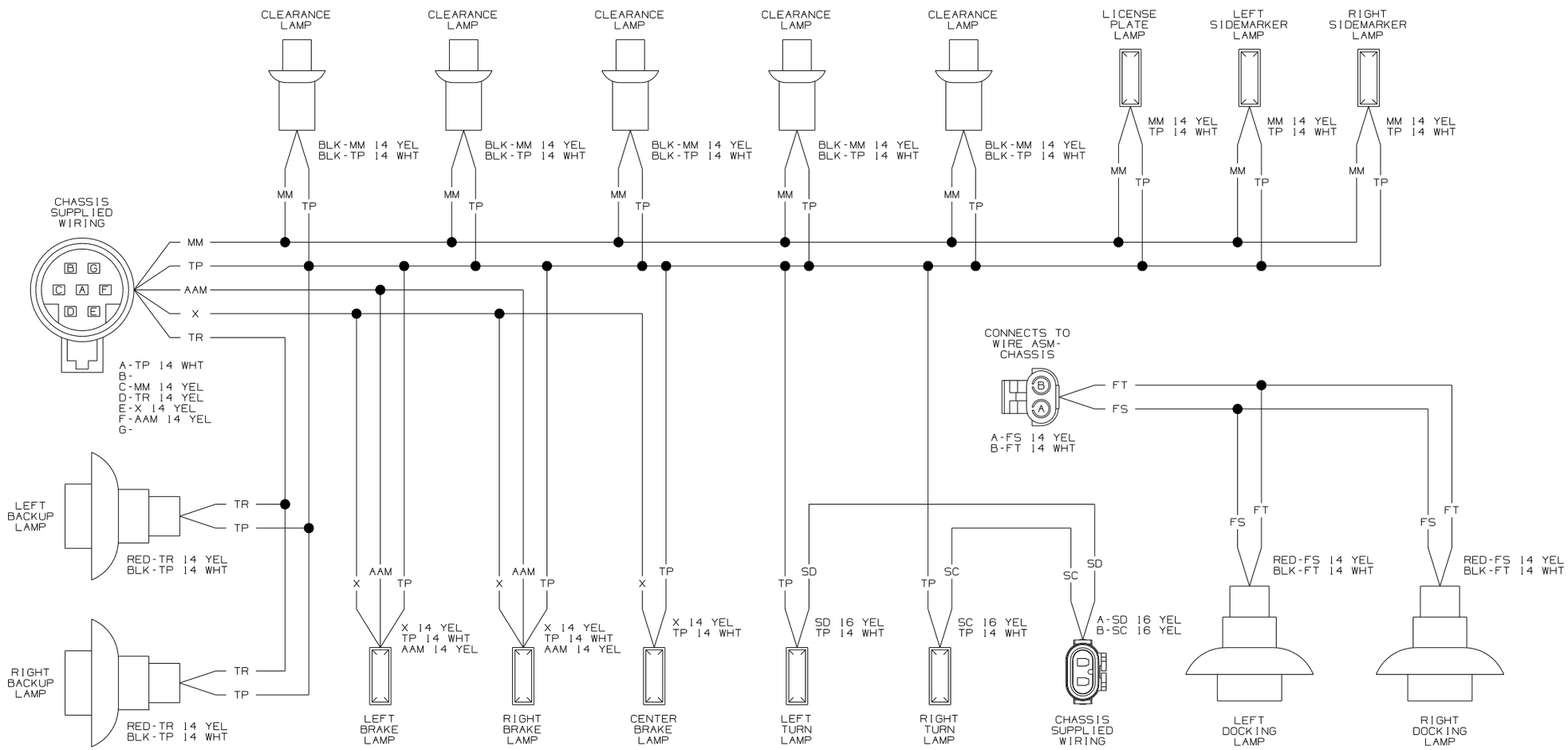

WIRING DIAGRAM-BACKWALL,FL
(WIRE ASM 146189-02 REV-C)
(ITA WITH SYSTEM 3 WIRING)

FIRST USED	04 P-SERIES
	DO NOT SCALE DRAWING
TITLE:	WIRING DIAGRAM-AUTO LAMPS
SHEET 5	PART NO 144992

DWG NO 144992

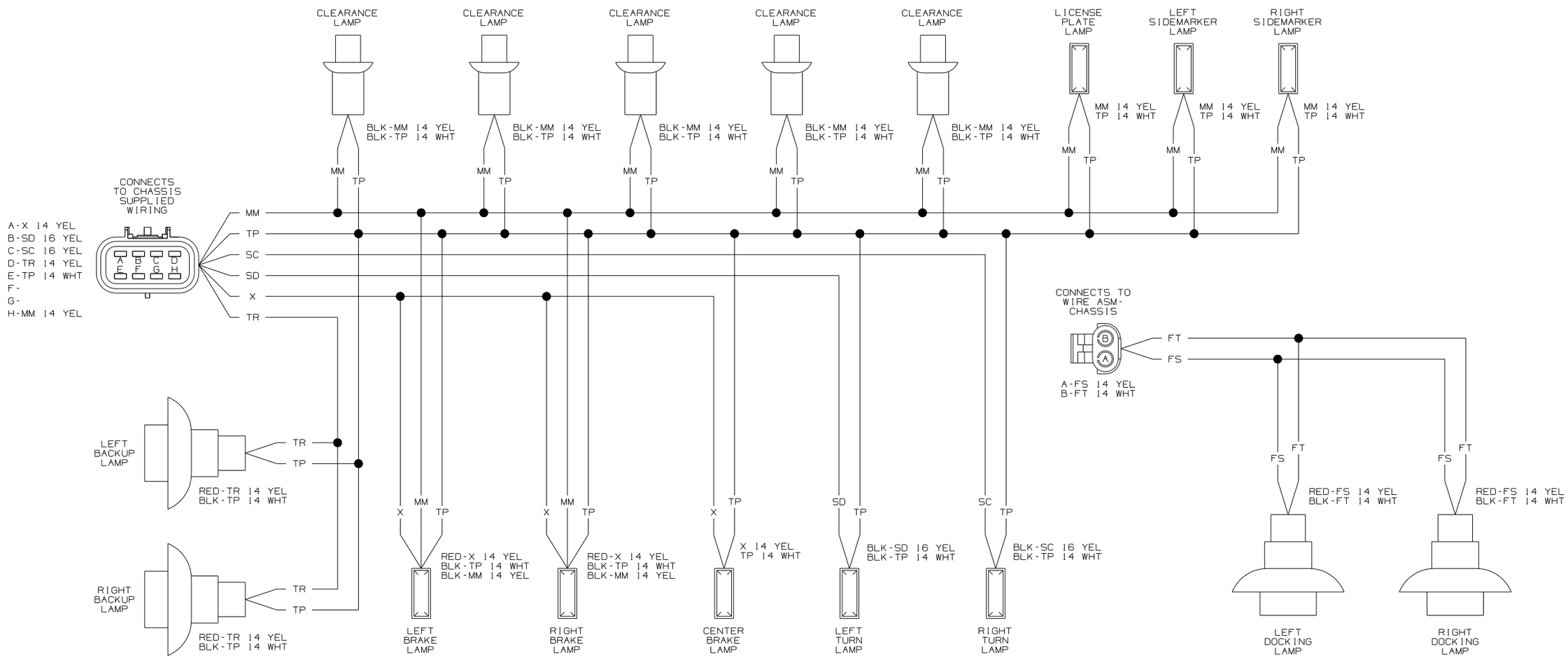

WIRING DIAGRAM-BACKWALL,FL
(WIRE ASM 146189-04 REV-C)
(ITA WITH MMDC WIRING)

FIRST USED	04 P-SERIES
	DO NOT SCALE DRAWING
TITLE:	WIRING DIAGRAM-AUTO LAMPS
SHEET 6	PART NO 144992

RELEASE	REV A	DATE	DWG NO 144980

REV	ZONE	REVISION RECORD	DATE	DFTR-ORIG

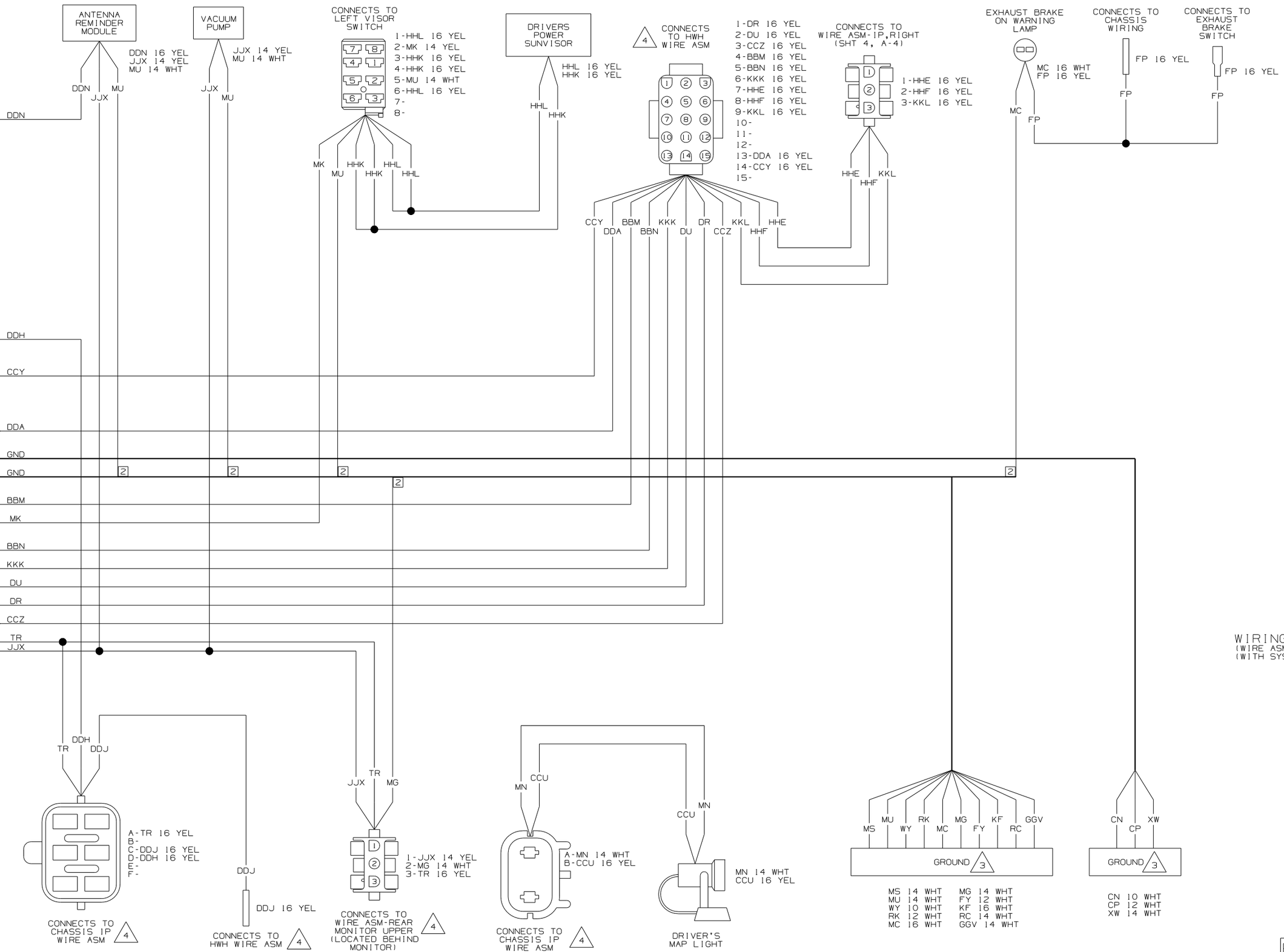

WIRING DIAGRAM IP,MAIN,FL
(WIRE ASM 145394 REV-U)
(WITH SYSTEM 3 WIRING)

COPYRIGHT 2004
WINNEBAGO
INDUSTRIES, INC.

DFTR	ORIG. DATE
CHKR	ALL DIMENSIONS ARE IN MILLIMETERS
P.E.	
M.E.	FIRST USED
DSNR	04 P-SERIES
UNSPECIFIED TOLERANCES ARE: WHOLE DIM (X) : ; ONE-PLACE (X.X) : ; TWO-PLACE (X.XX) : ; ANGLE :	MATERIAL:
THIRD ANGLE PROJECTION	

DO NOT SCALE DRAWING

TITLE: WIRING DIAGRAM-AUTO

SHEET 1 OF 5 | PART NO 144980

F1

REF: 1

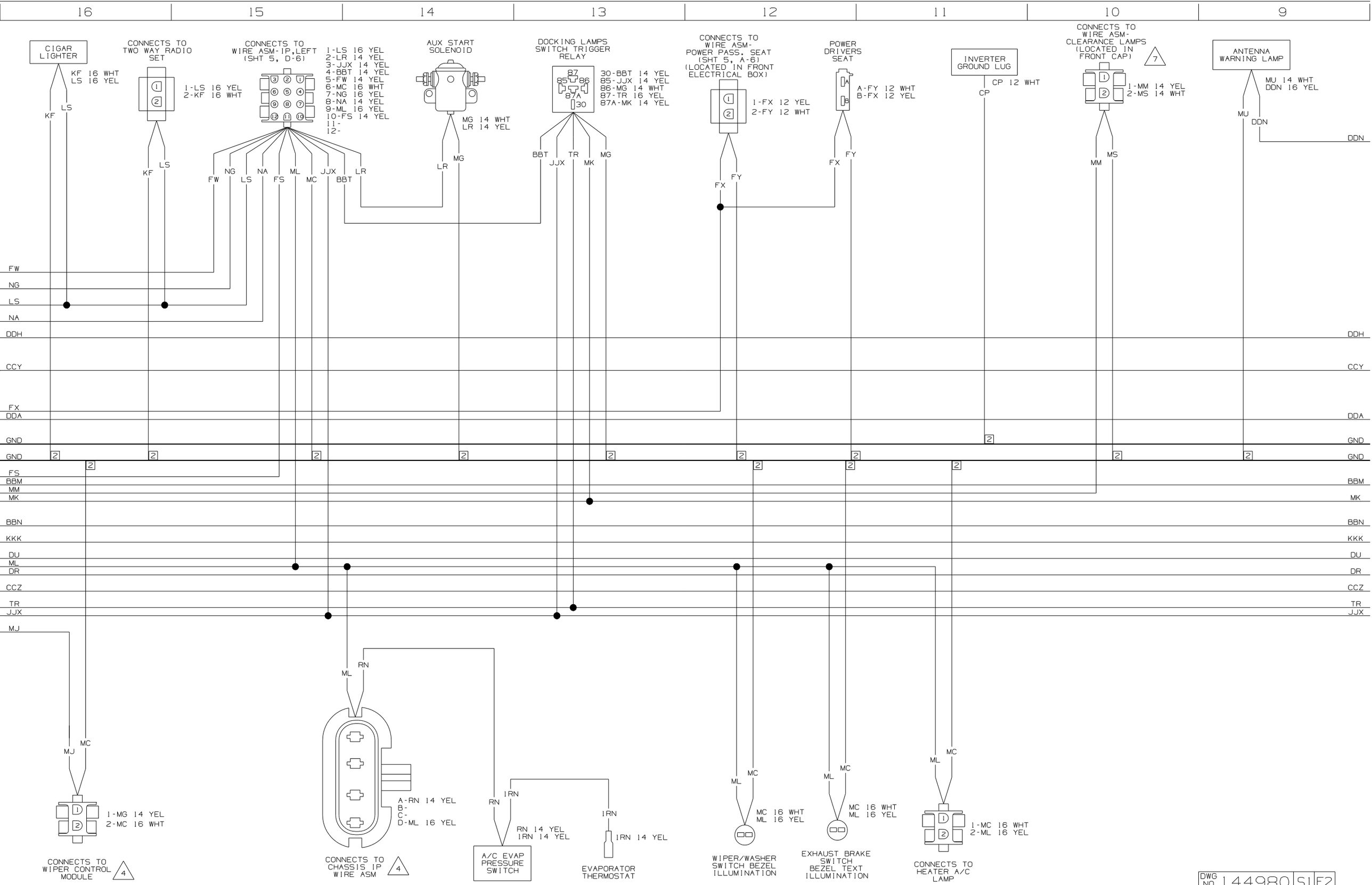
16
15
14
13
12
11
10
9
CIGAR LIGHTER
KF 16 WHT
LS 16 YEL
KF
LS
CONNECTS TO TWO WAY RADIO SET
1-LS 16 YEL
2-KF 16 WHT
CONNECTS TO WIRE ASM-IP,LEFT (SHT 5, D-6)
1-LS 16 YEL
2-LR 14 YEL
3-JJX 14 YEL
4-BBT 14 YEL
5-FW 14 YEL
6-MC 16 WHT
7-NG 16 YEL
8-NA 14 YEL
9-ML 16 YEL
10-FS 14 YEL
11-
12-
FW
NG
LS
NA
FS
ML
MC
JJX
BBT
LR
AUX START SOLENOID
MG 14 WHT
LR 14 YEL
MG
DOCKING LAMPS SWITCH TRIGGER RELAY
87
85
86
87A
30
30-BBT 14 YEL
85-JJX 14 YEL
86-MG 14 WHT
87-TR 16 YEL
87A-MK 14 YEL
TR
MK
CONNECTS TO WIRE ASM-POWER PASS. SEAT (SHT 5, A-6) (LOCATED IN FRONT ELECTRICAL BOX)
1-FX 12 YEL
2-FY 12 WHT
FX
FY
POWER DRIVERS SEAT
A-FY 12 WHT
B-FX 12 YEL
INVERTER GROUND LUG
CP 12 WHT
CP
CONNECTS TO WIRE ASM-CLEARANCE LAMPS (LOCATED IN FRONT CAP)
7
1-MM 14 YEL
2-MS 14 WHT
MM
MS
ANTENNA WARNING LAMP
MU 14 WHT
DDN 16 YEL
MU
DDN
DDH
CCY
DDA
GND
BBM
MK
BBN
KKK
DU
DR
CCZ
TR
JJX
MJ
1-MG 14 YEL
2-MC 16 WHT
CONNECTS TO WIPER CONTROL MODULE
4
RN
A-RN 14 YEL
B-
C-
D-ML 16 YEL
CONNECTS TO CHASSIS IP WIRE ASM
4
IRN
RN 14 YEL
IRN 14 YEL
A/C EVAP PRESSURE SWITCH
IRN 14 YEL
EVAPORATOR THERMOSTAT
MC 16 WHT
ML 16 YEL
WIPER/WASHER SWITCH BEZEL ILLUMINATION
MC 16 WHT
ML 16 YEL
EXHAUST BRAKE SWITCH BEZEL TEXT ILLUMINATION
1-MC 16 WHT
2-ML 16 YEL
CONNECTS TO HEATER A/C LAMP
DWG NO 144980 S1 F2

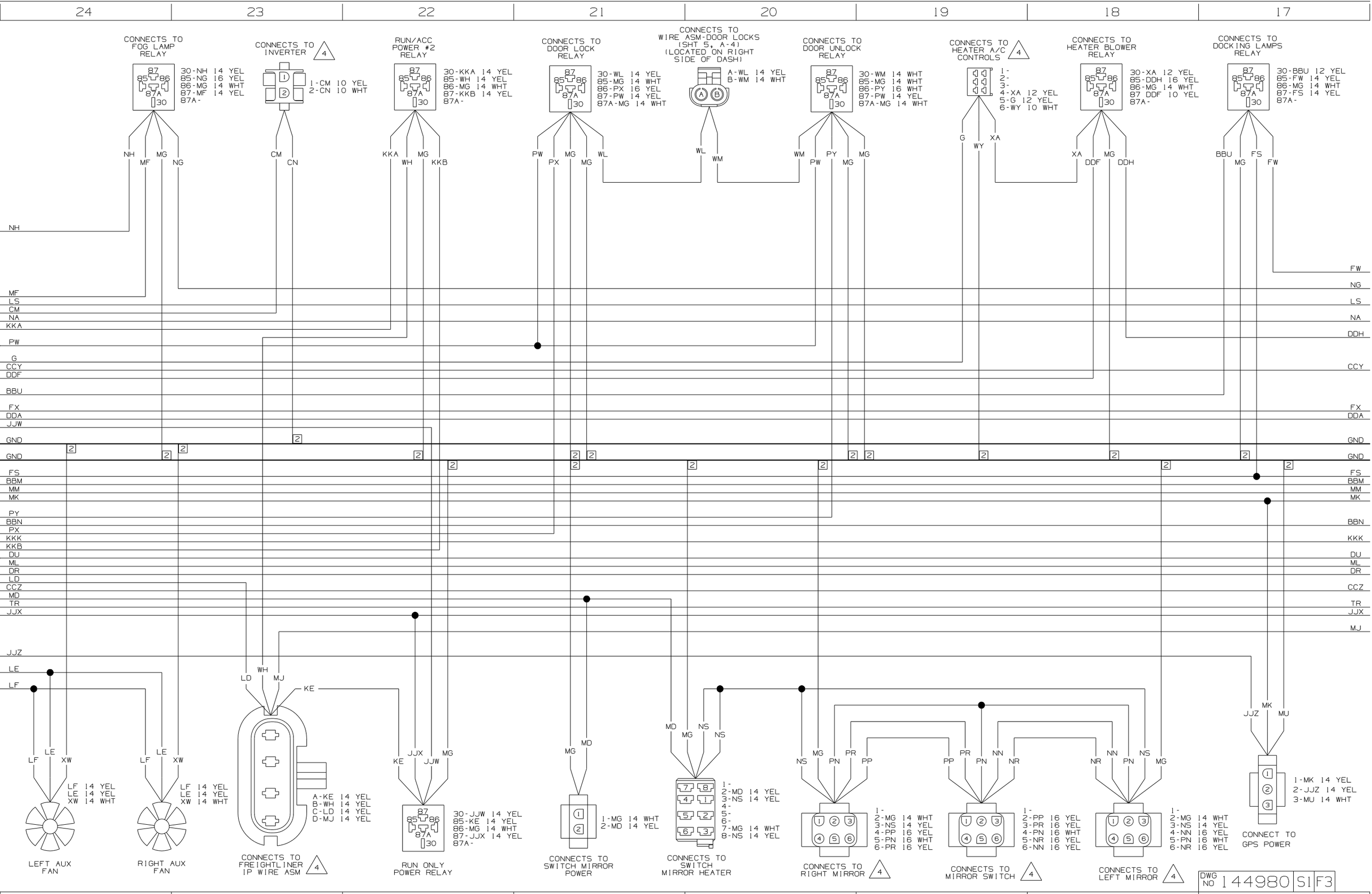
24
23
22
21
20
19
18
17
CONNECTS TO FOG LAMP RELAY
30-NH 14 YEL
85-NG 16 YEL
86-MG 14 WHT
87-MF 14 YEL
87A-
CONNECTS TO INVERTER 4
1-CM 10 YEL
2-CN 10 WHT
RUN/ACC POWER #2 RELAY
30-KKA 14 YEL
85-WH 14 YEL
86-MG 14 WHT
87-KKB 14 YEL
87A-
CONNECTS TO DOOR LOCK RELAY
30-WL 14 YEL
85-MG 14 WHT
86-PX 16 YEL
87-PW 14 YEL
87A-MG 14 WHT
CONNECTS TO WIRE ASM-DOOR LOCKS (SHT 5, A-4) (LOCATED ON RIGHT SIDE OF DASH)
A-WL 14 YEL
B-WM 14 WHT
CONNECTS TO DOOR UNLOCK RELAY
30-WM 14 WHT
85-MG 14 WHT
86-PY 16 WHT
87-PW 14 YEL
87A-MG 14 WHT
CONNECTS TO HEATER A/C CONTROLS 4
1-
2-
3-
4-XA 12 YEL
5-G 12 YEL
6-WY 10 WHT
CONNECTS TO HEATER BLOWER RELAY
30-XA 12 YEL
85-DDH 16 YEL
86-MG 14 WHT
87 DDF 10 YEL
87A-
CONNECTS TO DOCKING LAMPS RELAY
30-BBU 12 YEL
85-FW 14 YEL
86-MG 14 WHT
87-FS 14 YEL
87A-
NH
MF
LS
CM
NA
KKA
PW
G
CCY
DDF
BBU
FX
DDA
JJW
GND
FS
BBM
MM
MK
PY
BBN
PX
KKK
KKB
DU
ML
DR
LD
CCZ
MD
TR
JJX
JJZ
LE
LF
MJ
LF 14 YEL
LE 14 YEL
XW 14 WHT
LEFT AUX FAN
RIGHT AUX FAN
A-KE 14 YEL
B-WH 14 YEL
C-LD 14 YEL
D-MJ 14 YEL
CONNECTS TO FREIGHTLINER IP WIRE ASM 4
30-JJW 14 YEL
85-KE 14 YEL
86-MG 14 WHT
87-JJX 14 YEL
87A-
RUN ONLY POWER RELAY
1-MG 14 WHT
2-MD 14 YEL
CONNECTS TO SWITCH MIRROR POWER
1-
2-MD 14 YEL
3-NS 14 YEL
4-
5-
6-
7-MG 14 WHT
8-NS 14 YEL
CONNECTS TO SWITCH MIRROR HEATER
1-
2-MG 14 WHT
3-NS 14 YEL
4-PP 16 YEL
5-PN 16 WHT
6-PR 16 YEL
CONNECTS TO RIGHT MIRROR 4
1-
2-PP 16 YEL
3-PR 16 YEL
4-PN 16 WHT
5-NR 16 YEL
6-NN 16 YEL
CONNECTS TO MIRROR SWITCH 4
1-
2-MG 14 WHT
3-NS 14 YEL
4-NN 16 YEL
5-PN 16 WHT
6-NR 16 YEL
CONNECTS TO LEFT MIRROR 4
1-MK 14 YEL
2-JJZ 14 YEL
3-MU 14 WHT
CONNECT TO GPS POWER
DWG NO 144980 S1 F3
1/7/2008 Page 21

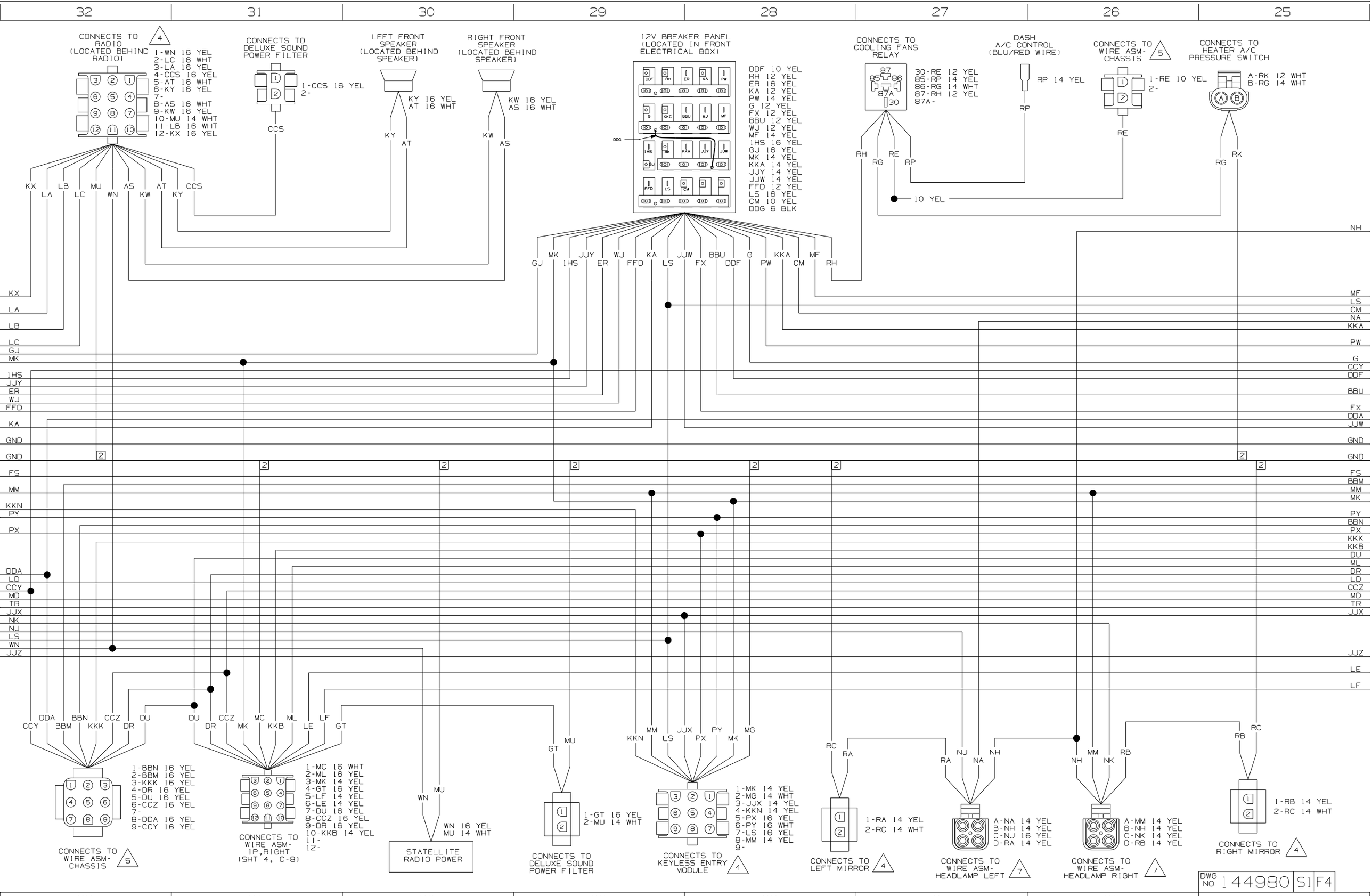
32
31
30
29
28
27
26
25
CONNECTS TO RADIO (LOCATED BEHIND RADIO)
4
1-WN 16 YEL
2-LC 16 WHT
3-LA 16 YEL
4-CCS 16 YEL
5-AT 16 WHT
6-KY 16 YEL
7-
8-AS 16 WHT
9-KW 16 YEL
10-MU 14 WHT
11-LB 16 WHT
12-KX 16 YEL
CONNECTS TO DELUXE SOUND POWER FILTER
1-CCS 16 YEL
2-
CCS
LEFT FRONT SPEAKER (LOCATED BEHIND SPEAKER)
KY 16 YEL
AT 16 WHT
KY
AT
RIGHT FRONT SPEAKER (LOCATED BEHIND SPEAKER)
KW 16 YEL
AS 16 WHT
KW
AS
12V BREAKER PANEL (LOCATED IN FRONT ELECTRICAL BOX)
DDF 10 YEL
RH 12 YEL
ER 16 YEL
KA 12 YEL
PW 14 YEL
G 12 YEL
FX 12 YEL
BBU 12 YEL
WJ 12 YEL
MF 14 YEL
IHS 16 YEL
GJ 16 YEL
MK 14 YEL
KKA 14 YEL
JJY 14 YEL
JJW 14 YEL
FFD 12 YEL
LS 16 YEL
CM 10 YEL
DDG 6 BLK
DDG
CONNECTS TO COOLING FANS RELAY
87
85
86
87A
30
30-RE 12 YEL
85-RP 14 YEL
86-RG 14 WHT
87-RH 12 YEL
87A-
DASH A/C CONTROL (BLU/RED WIRE)
RP 14 YEL
RP
CONNECTS TO WIRE ASM-CHASSIS
5
1-RE 10 YEL
2-
RE
CONNECTS TO HEATER A/C PRESSURE SWITCH
A-RK 12 WHT
B-RG 14 WHT
RK
RG
RH
RE
RP
10 YEL
KX
LA
LB
MU
WN
AS
KW
AT
KY
CCS
LC
GJ
MK
IHS
JJY
ER
WJ
FFD
KA
LS
JJW
FX
DDF
BBU
G
PW
KKA
CM
MF
NH
GND
FS
MM
KKN
PY
PX
DDA
LD
CCY
MD
TR
JJX
NK
NJ
WN
JJZ
LE
LF
CCY
DDA
BBM
BBN
KKK
CCZ
DR
DU
DU
DR
CCZ
MK
MC
KKB
ML
LE
LF
GT
1-BBN 16 YEL
2-BBM 16 YEL
3-KKK 16 YEL
4-DR 16 YEL
5-DU 16 YEL
6-CCZ 16 YEL
7-
8-DDA 16 YEL
9-CCY 16 YEL
CONNECTS TO WIRE ASM-CHASSIS
5
1-MC 16 WHT
2-ML 16 YEL
3-MK 14 YEL
4-GT 16 YEL
5-LF 14 YEL
6-LE 14 YEL
7-DU 16 YEL
8-CCZ 16 YEL
9-DR 16 YEL
10-KKB 14 YEL
11-
12-
CONNECTS TO WIRE ASM-IP,RIGHT (SHT 4, C-8)
WN
MU
WN 16 YEL
MU 14 WHT
STATELLITE RADIO POWER
GT
MU
1-GT 16 YEL
2-MU 14 WHT
CONNECTS TO DELUXE SOUND POWER FILTER
KKN
MM
LS
JJX
PX
PY
MK
MG
1-MK 14 YEL
2-MG 14 WHT
3-JJX 14 YEL
4-KKN 14 YEL
5-PX 16 YEL
6-PY 16 WHT
7-LS 16 YEL
8-MM 14 YEL
9-
CONNECTS TO KEYLESS ENTRY MODULE
4
RC
RA
1-RA 14 YEL
2-RC 14 WHT
CONNECTS TO LEFT MIRROR
4
RA
NJ
NA
NH
A-NA 14 YEL
B-NH 14 YEL
C-NJ 16 YEL
D-RA 14 YEL
CONNECTS TO WIRE ASM-HEADLAMP LEFT
7
NH
MM
NK
RB
A-MM 14 YEL
B-NH 14 YEL
C-NK 14 YEL
D-RB 14 YEL
CONNECTS TO WIRE ASM-HEADLAMP RIGHT
7
RB
RC
1-RB 14 YEL
2-RC 14 WHT
CONNECTS TO RIGHT MIRROR
4
DWG NO 144980 S1 F4
1/7/2004
Page 22

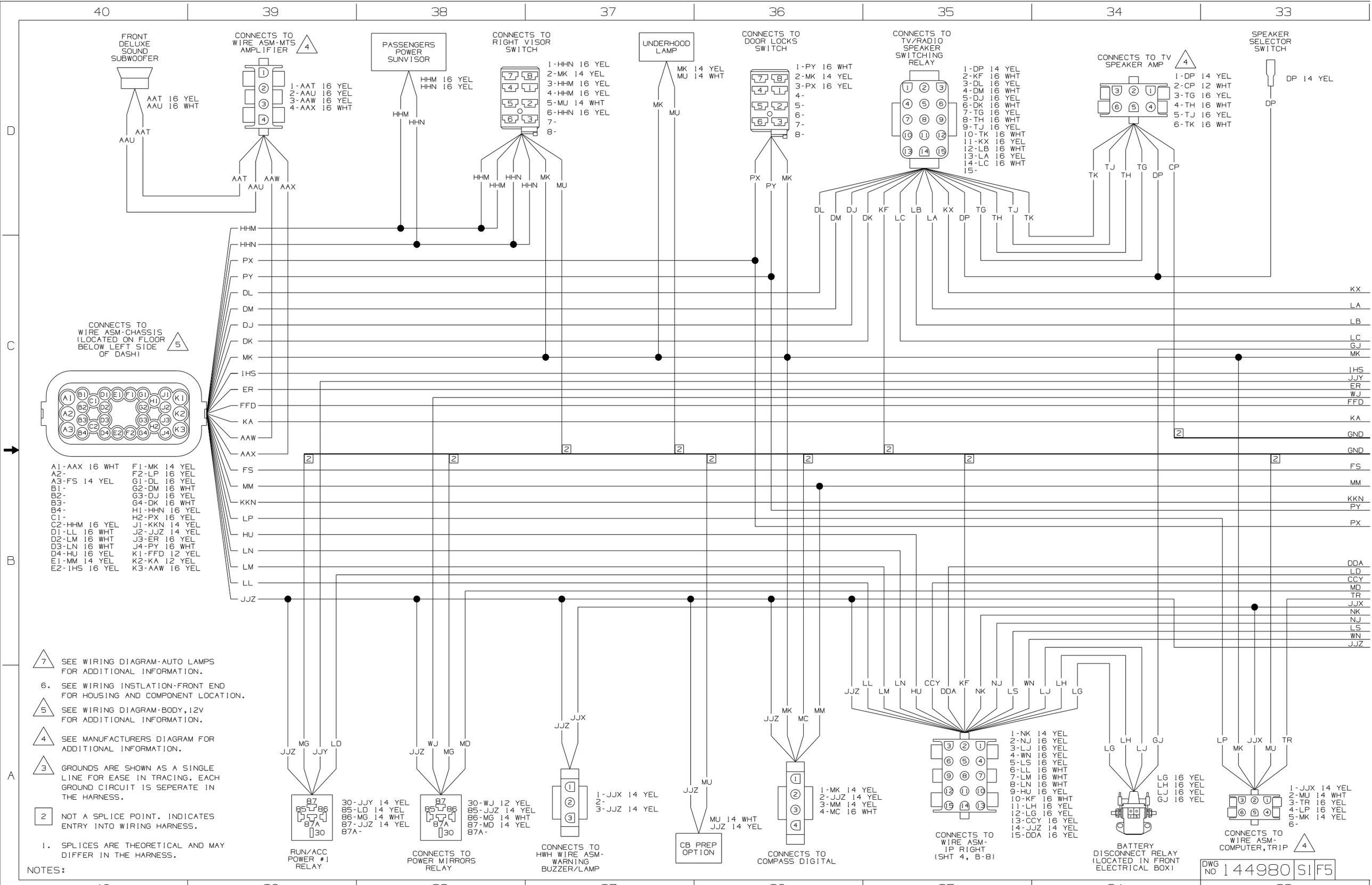
FRONT DELUXE SOUND SUBWOOFER
AAT 16 YEL
AAU 16 WHT
CONNECTS TO WIRE ASM-MTS AMPLIFIER
1-AAT 16 YEL
2-AAU 16 YEL
3-AAW 16 YEL
4-AAX 16 WHT
PASSENGERS POWER SUNVISOR
HHM 16 YEL
HHN 16 YEL
CONNECTS TO RIGHT VISOR SWITCH
1-HHN 16 YEL
2-MK 14 YEL
3-HHM 16 YEL
4-HHM 16 YEL
5-MU 14 WHT
6-HHN 16 YEL
UNDERHOOD LAMP
MK 14 YEL
MU 14 WHT
CONNECTS TO DOOR LOCKS SWITCH
1-PY 16 WHT
2-MK 14 YEL
3-PX 16 YEL
CONNECTS TO TV/RADIO SPEAKER SWITCHING RELAY
1-DP 14 YEL
2-KF 16 WHT
3-DL 16 YEL
4-DM 16 WHT
5-DJ 16 YEL
6-DK 16 WHT
7-TG 16 YEL
8-TH 16 WHT
9-TJ 16 YEL
10-TK 16 WHT
11-KX 16 YEL
12-LB 16 WHT
13-LA 16 YEL
14-LC 16 WHT
CONNECTS TO TV SPEAKER AMP
1-DP 14 YEL
2-CP 12 WHT
3-TG 16 YEL
4-TH 16 WHT
5-TJ 16 YEL
6-TK 16 WHT
SPEAKER SELECTOR SWITCH
DP 14 YEL
CONNECTS TO WIRE ASM-CHASSIS (LOCATED ON FLOOR BELOW LEFT SIDE OF DASH)
A1-AAX 16 WHT
A2-
A3-FS 14 YEL
B1-
B2-
B3-
B4-
C1-
C2-HHM 16 YEL
D1-LL 16 WHT
D2-LM 16 WHT
D3-LN 16 WHT
D4-HU 16 YEL
E1-MM 14 YEL
E2-IHS 16 YEL
F1-MK 14 YEL
F2-LP 16 YEL
G1-DL 16 YEL
G2-DM 16 WHT
G3-DJ 16 YEL
G4-DK 16 WHT
H1-HHN 16 YEL
H2-PX 16 YEL
J1-KKN 14 YEL
J2-JJZ 14 YEL
J3-ER 16 YEL
J4-PY 16 WHT
K1-FFD 12 YEL
K2-KA 12 YEL
K3-AAW 16 YEL
RUN/ACC POWER #1 RELAY
30-JJY 14 YEL
85-LD 14 YEL
86-MG 14 WHT
87-JJZ 14 YEL
87A-
CONNECTS TO POWER MIRRORS RELAY
30-WJ 12 YEL
85-JJZ 14 YEL
86-MG 14 WHT
87-MD 14 YEL
87A-
CONNECTS TO HWH WIRE ASM-WARNING BUZZER/LAMP
1-JJX 14 YEL
2-
3-JJZ 14 YEL
CB PREP OPTION
MU 14 WHT
JJZ 14 YEL
CONNECTS TO COMPASS DIGITAL
1-MK 14 YEL
2-JJZ 14 YEL
3-MM 14 YEL
4-MC 16 WHT
CONNECTS TO WIRE ASM-IP RIGHT (SHT 4, B-8)
1-NK 14 YEL
2-NJ 16 YEL
3-LJ 16 YEL
4-WN 16 YEL
5-LS 16 YEL
6-LL 16 WHT
7-LM 16 WHT
8-LN 16 WHT
9-HU 16 YEL
10-KF 16 WHT
11-LH 16 YEL
12-LG 16 YEL
13-CCY 16 YEL
14-JJZ 14 YEL
15-DDA 16 YEL
BATTERY DISCONNECT RELAY (LOCATED IN FRONT ELECTRICAL BOX)
LG 16 YEL
LH 16 YEL
LJ 16 YEL
GJ 16 YEL
CONNECTS TO WIRE ASM-COMPUTER,TRIP
1-JJX 14 YEL
2-MU 14 WHT
3-TR 16 YEL
4-LP 16 YEL
5-MK 14 YEL
6-
7 SEE WIRING DIAGRAM-AUTO LAMPS FOR ADDITIONAL INFORMATION.
6. SEE WIRING INSTLATION-FRONT END FOR HOUSING AND COMPONENT LOCATION.
5 SEE WIRING DIAGRAM-BODY,12V FOR ADDITIONAL INFORMATION.
4 SEE MANUFACTURERS DIAGRAM FOR ADDITIONAL INFORMATION.
3 GROUNDS ARE SHOWN AS A SINGLE LINE FOR EASE IN TRACING. EACH GROUND CIRCUIT IS SEPERATE IN THE HARNESS.
2 NOT A SPLICE POINT. INDICATES ENTRY INTO WIRING HARNESS.
1. SPLICES ARE THEORETICAL AND MAY DIFFER IN THE HARNESS.
NOTES:
DWG NO 144980 S1 F5

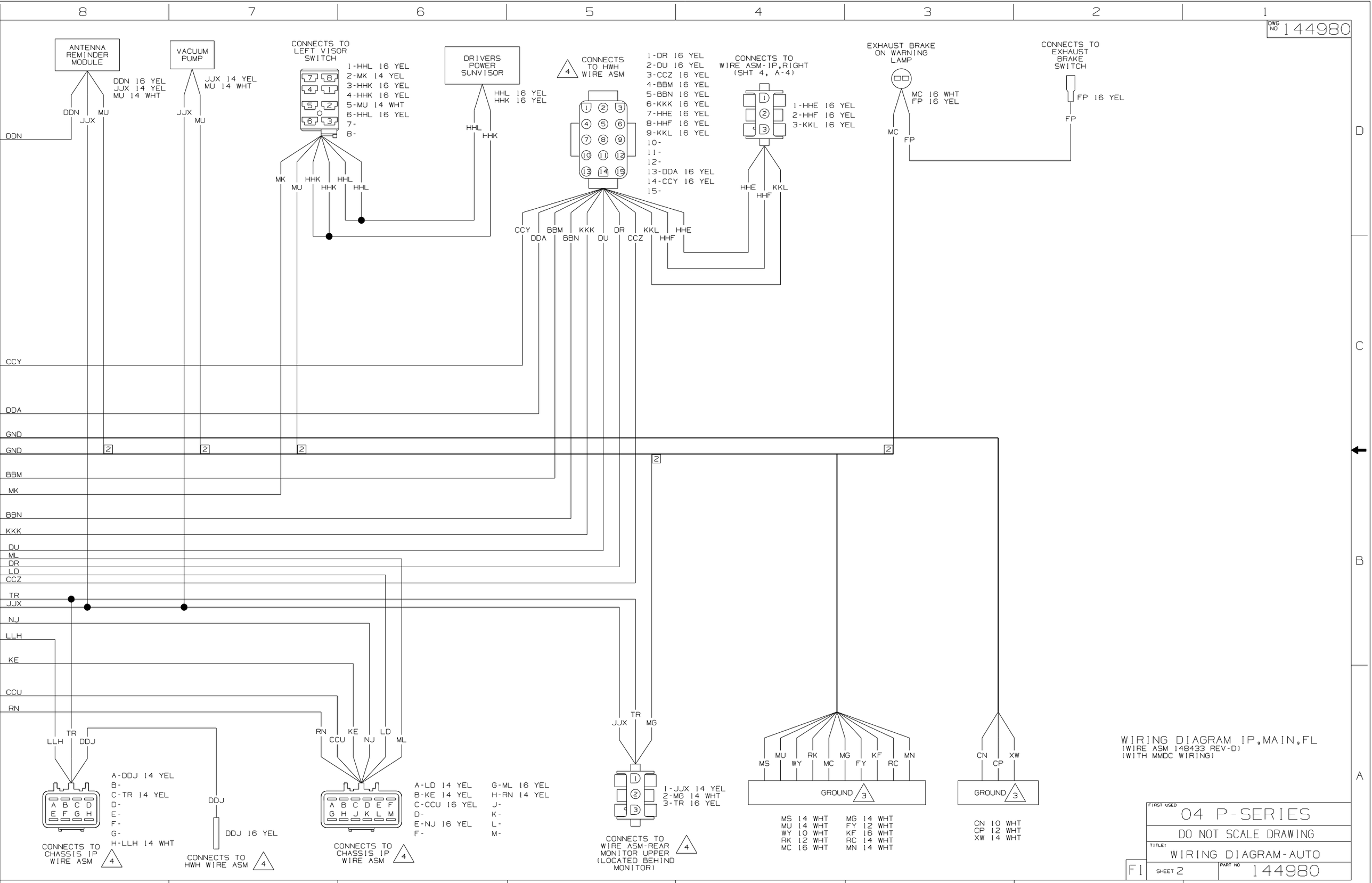
DWG NO 144980
ANTENNA REMINDER MODULE
DDN 16 YEL
JJX 14 YEL
MU 14 WHT
DDN
JJX
MU
VACUUM PUMP
JJX 14 YEL
MU 14 WHT
JJX
MU
CONNECTS TO LEFT VISOR SWITCH
1-HHL 16 YEL
2-MK 14 YEL
3-HHK 16 YEL
4-HHK 16 YEL
5-MU 14 WHT
6-HHL 16 YEL
7-
8-
MK
MU
HHK
HHK
HHL
HHL
DRIVERS POWER SUNVISOR
HHL 16 YEL
HHK 16 YEL
HHL
HHK
4
CONNECTS TO HWH WIRE ASM
1-DR 16 YEL
2-DU 16 YEL
3-CCZ 16 YEL
4-BBM 16 YEL
5-BBN 16 YEL
6-KKK 16 YEL
7-HHE 16 YEL
8-HHF 16 YEL
9-KKL 16 YEL
10-
11-
12-
13-DDA 16 YEL
14-CCY 16 YEL
15-
CCY
DDA
BBM
BBN
KKK
DU
DR
CCZ
KKL
HHF
HHE
CONNECTS TO WIRE ASM-IP,RIGHT (SHT 4, A-4)
1-HHE 16 YEL
2-HHF 16 YEL
3-KKL 16 YEL
HHE
HHF
KKL
EXHAUST BRAKE ON WARNING LAMP
MC 16 WHT
FP 16 YEL
MC
FP
CONNECTS TO EXHAUST BRAKE SWITCH
FP 16 YEL
FP
DDN
CCY
DDA
GND
GND
BBM
MK
BBN
KKK
DU
ML
DR
LD
CCZ
TR
JJX
NJ
LLH
KE
CCU
RN
2
LLH
TR
DDJ
A-DDJ 14 YEL
B-
C-TR 14 YEL
D-
E-
F-
G-
H-LLH 14 WHT
CONNECTS TO CHASSIS IP WIRE ASM
4
DDJ
DDJ 16 YEL
CONNECTS TO HWH WIRE ASM
4
RN
CCU
KE
NJ
LD
ML
A-LD 14 YEL
B-KE 14 YEL
C-CCU 16 YEL
D-
E-NJ 16 YEL
F-
G-ML 16 YEL
H-RN 14 YEL
J-
K-
L-
M-
CONNECTS TO CHASSIS IP WIRE ASM
4
JJX
TR
MG
1-JJX 14 YEL
2-MG 14 WHT
3-TR 16 YEL
CONNECTS TO WIRE ASM-REAR MONITOR UPPER (LOCATED BEHIND MONITOR)
4
MS
MU
WY
RK
MC
MG
FY
KF
RC
MN
GROUND
3
MS 14 WHT
MU 14 WHT
WY 10 WHT
RK 12 WHT
MC 16 WHT
MG 14 WHT
FY 12 WHT
KF 16 WHT
RC 14 WHT
MN 14 WHT
CN
CP
XW
GROUND
3
CN 10 WHT
CP 12 WHT
XW 14 WHT
WIRING DIAGRAM IP,MAIN,FL
(WIRE ASM 148433 REV-D)
(WITH MMDC WIRING)
FIRST USED
04 P-SERIES
DO NOT SCALE DRAWING
TITLE:
WIRING DIAGRAM-AUTO
F1
SHEET 2
PART NO
144980

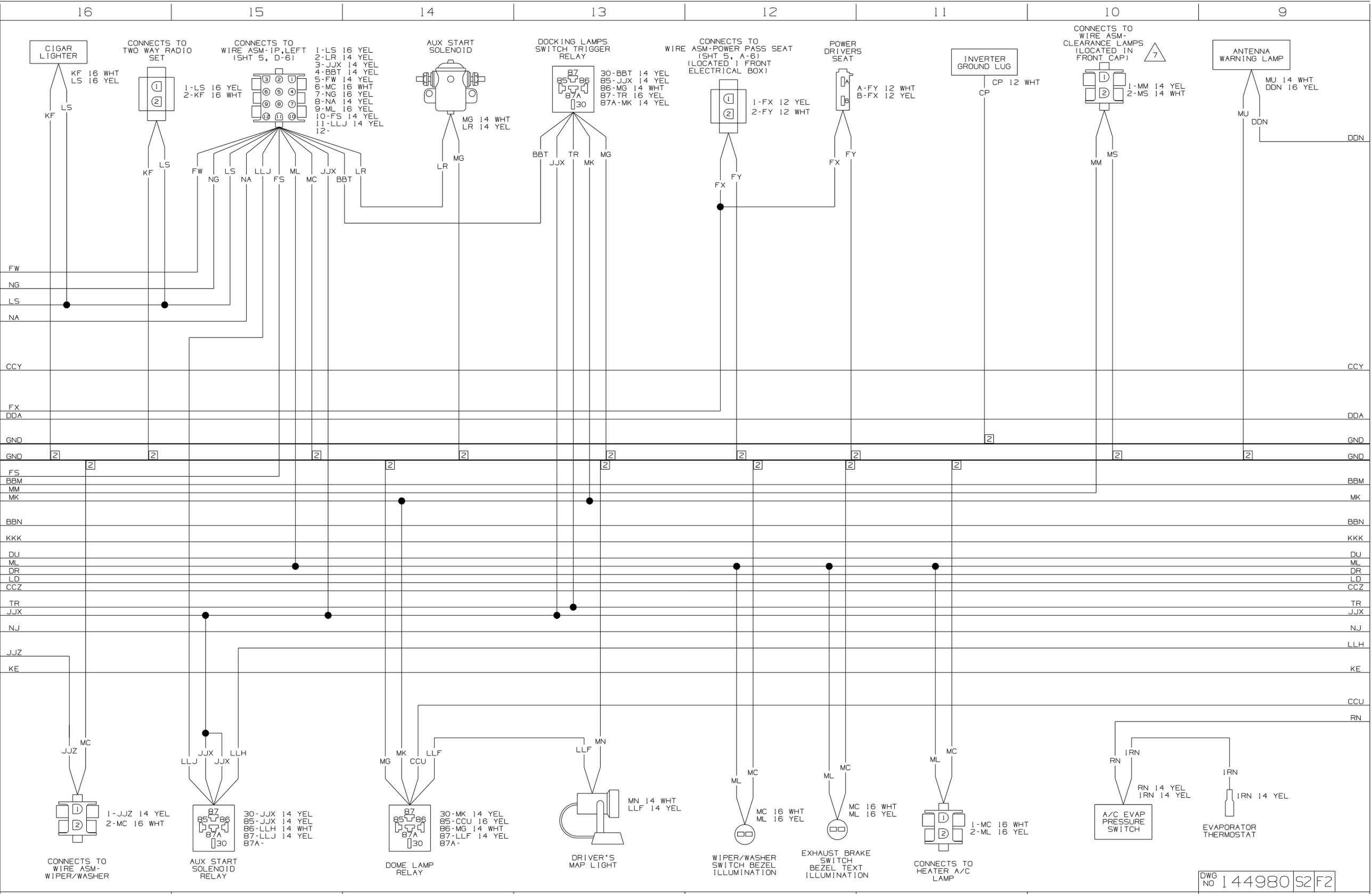
16
15
14
13
12
11
10
9
CIGAR LIGHTER
KF 16 WHT
LS 16 YEL
CONNECTS TO TWO WAY RADIO SET
1-LS 16 YEL
2-KF 16 WHT
CONNECTS TO WIRE ASM-IP,LEFT (SHT 5, D-6)
1-LS 16 YEL
2-LR 14 YEL
3-JJX 14 YEL
4-BBT 14 YEL
5-FW 14 YEL
6-MC 16 WHT
7-NG 16 YEL
8-NA 14 YEL
9-ML 16 YEL
10-FS 14 YEL
11-LLJ 14 YEL
12-
AUX START SOLENOID
MG 14 WHT
LR 14 YEL
DOCKING LAMPS SWITCH TRIGGER RELAY
30-BBT 14 YEL
85-JJX 14 YEL
86-MG 14 WHT
87-TR 16 YEL
87A-MK 14 YEL
CONNECTS TO WIRE ASM-POWER PASS SEAT (SHT 5, A-6) (LOCATED I FRONT ELECTRICAL BOX)
1-FX 12 YEL
2-FY 12 WHT
POWER DRIVERS SEAT
A-FY 12 WHT
B-FX 12 YEL
INVERTER GROUND LUG
CP 12 WHT
CONNECTS TO WIRE ASM-CLEARANCE LAMPS (LOCATED IN FRONT CAP)
1-MM 14 YEL
2-MS 14 WHT
ANTENNA WARNING LAMP
MU 14 WHT
DDN 16 YEL
FW
NG
LS
NA
CCY
FX
DDA
GND
FS
BBM
MM
MK
BBN
KKK
DU
ML
DR
LD
CCZ
TR
JJX
NJ
LLH
JJZ
KE
CCU
RN
1-JJZ 14 YEL
2-MC 16 WHT
CONNECTS TO WIRE ASM-WIPER/WASHER
30-JJX 14 YEL
85-JJX 14 YEL
86-LLH 14 WHT
87-LLJ 14 YEL
87A-
AUX START SOLENOID RELAY
30-MK 14 YEL
85-CCU 16 YEL
86-MG 14 WHT
87-LLF 14 YEL
87A-
DOME LAMP RELAY
MN 14 WHT
LLF 14 YEL
DRIVER'S MAP LIGHT
MC 16 WHT
ML 16 YEL
WIPER/WASHER SWITCH BEZEL ILLUMINATION
EXHAUST BRAKE SWITCH BEZEL TEXT ILLUMINATION
1-MC 16 WHT
2-ML 16 YEL
CONNECTS TO HEATER A/C LAMP
RN 14 YEL
IRN 14 YEL
A/C EVAP PRESSURE SWITCH
EVAPORATOR THERMOSTAT
DWG NO 144980 S2 F2

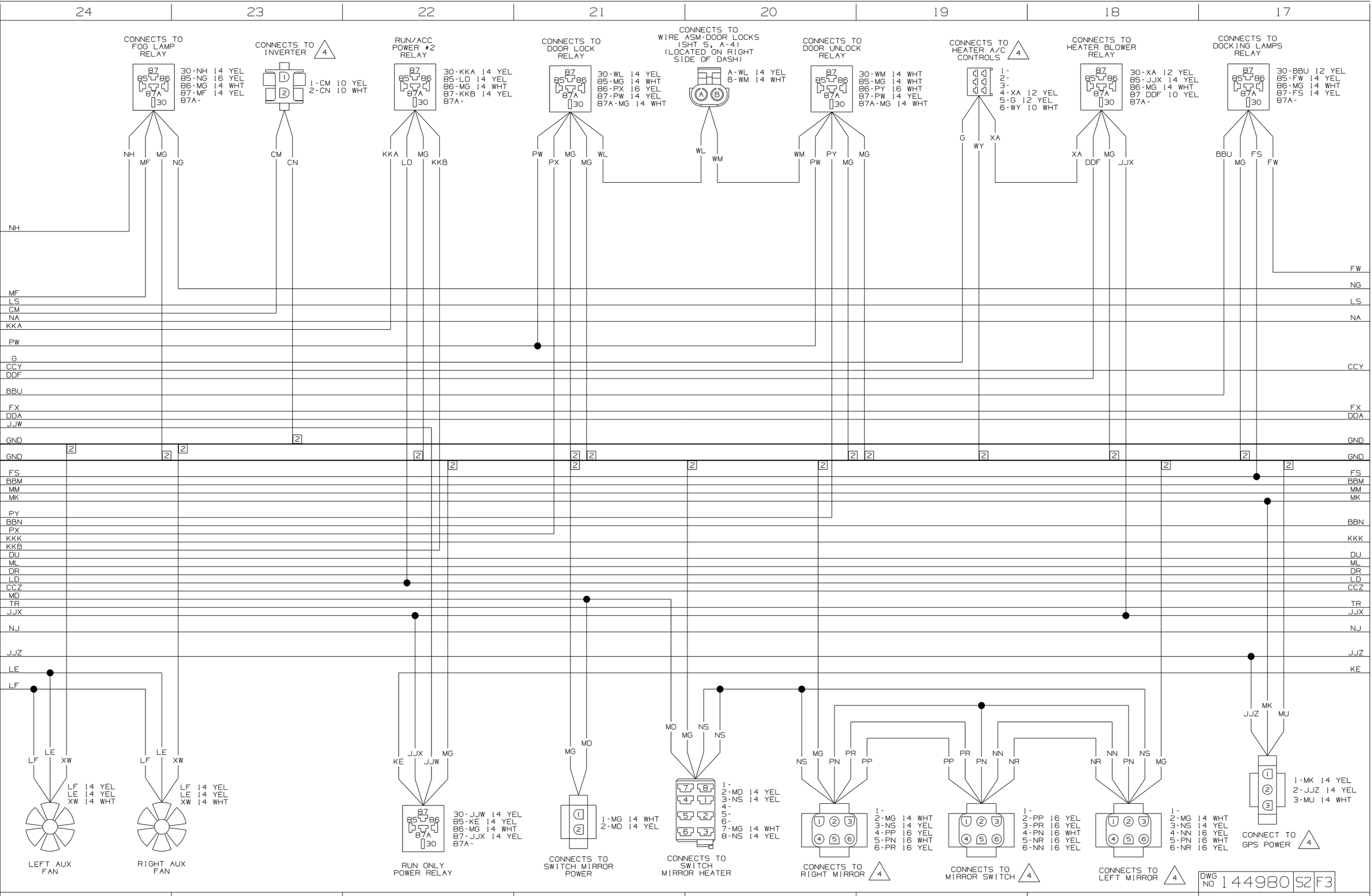
24
23
22
21
20
19
18
17
CONNECTS TO FOG LAMP RELAY
30-NH 14 YEL
85-NG 16 YEL
86-MG 14 WHT
87-MF 14 YEL
87A-
CONNECTS TO INVERTER 4
1-CM 10 YEL
2-CN 10 WHT
RUN/ACC POWER #2 RELAY
30-KKA 14 YEL
85-LD 14 YEL
86-MG 14 WHT
87-KKB 14 YEL
87A-
CONNECTS TO DOOR LOCK RELAY
30-WL 14 YEL
85-MG 14 WHT
86-PX 16 YEL
87-PW 14 YEL
87A-MG 14 WHT
CONNECTS TO WIRE ASM-DOOR LOCKS (SHT 5, A-4) (LOCATED ON RIGHT SIDE OF DASH)
A-WL 14 YEL
B-WM 14 WHT
CONNECTS TO DOOR UNLOCK RELAY
30-WM 14 WHT
85-MG 14 WHT
86-PY 16 WHT
87-PW 14 YEL
87A-MG 14 WHT
CONNECTS TO HEATER A/C CONTROLS 4
1-
2-
3-
4-XA 12 YEL
5-G 12 YEL
6-WY 10 WHT
CONNECTS TO HEATER BLOWER RELAY
30-XA 12 YEL
85-JJX 14 YEL
86-MG 14 WHT
87 DDF 10 YEL
87A-
CONNECTS TO DOCKING LAMPS RELAY
30-BBU 12 YEL
85-FW 14 YEL
86-MG 14 WHT
87-FS 14 YEL
87A-
NH
MF
LS
CM
NA
KKA
PW
G
CCY
DDF
BBU
FX
DDA
JJW
GND
FS
BBM
MM
MK
PY
BBN
PX
KKK
KKB
DU
ML
DR
LD
CCZ
MD
TR
JJX
NJ
JJZ
LE
LF
NG
KE
FW
LF 14 YEL
LE 14 YEL
XW 14 WHT
LEFT AUX FAN
RIGHT AUX FAN
30-JJW 14 YEL
85-KE 14 YEL
86-MG 14 WHT
87-JJX 14 YEL
87A-
RUN ONLY POWER RELAY
1-MG 14 WHT
2-MD 14 YEL
CONNECTS TO SWITCH MIRROR POWER
1-
2-MD 14 YEL
3-NS 14 YEL
4-
5-
6-
7-MG 14 WHT
8-NS 14 YEL
CONNECTS TO SWITCH MIRROR HEATER
1-
2-MG 14 WHT
3-NS 14 YEL
4-PP 16 YEL
5-PN 16 WHT
6-PR 16 YEL
CONNECTS TO RIGHT MIRROR 4
1-
2-PP 16 YEL
3-PR 16 YEL
4-PN 16 WHT
5-NR 16 YEL
6-NN 16 YEL
CONNECTS TO MIRROR SWITCH 4
1-
2-MG 14 WHT
3-NS 14 YEL
4-NN 16 YEL
5-PN 16 WHT
6-NR 16 YEL
CONNECTS TO LEFT MIRROR 4
1-MK 14 YEL
2-JJZ 14 YEL
3-MU 14 WHT
CONNECT TO GPS POWER 4
DWG NO 144980 S2 F3

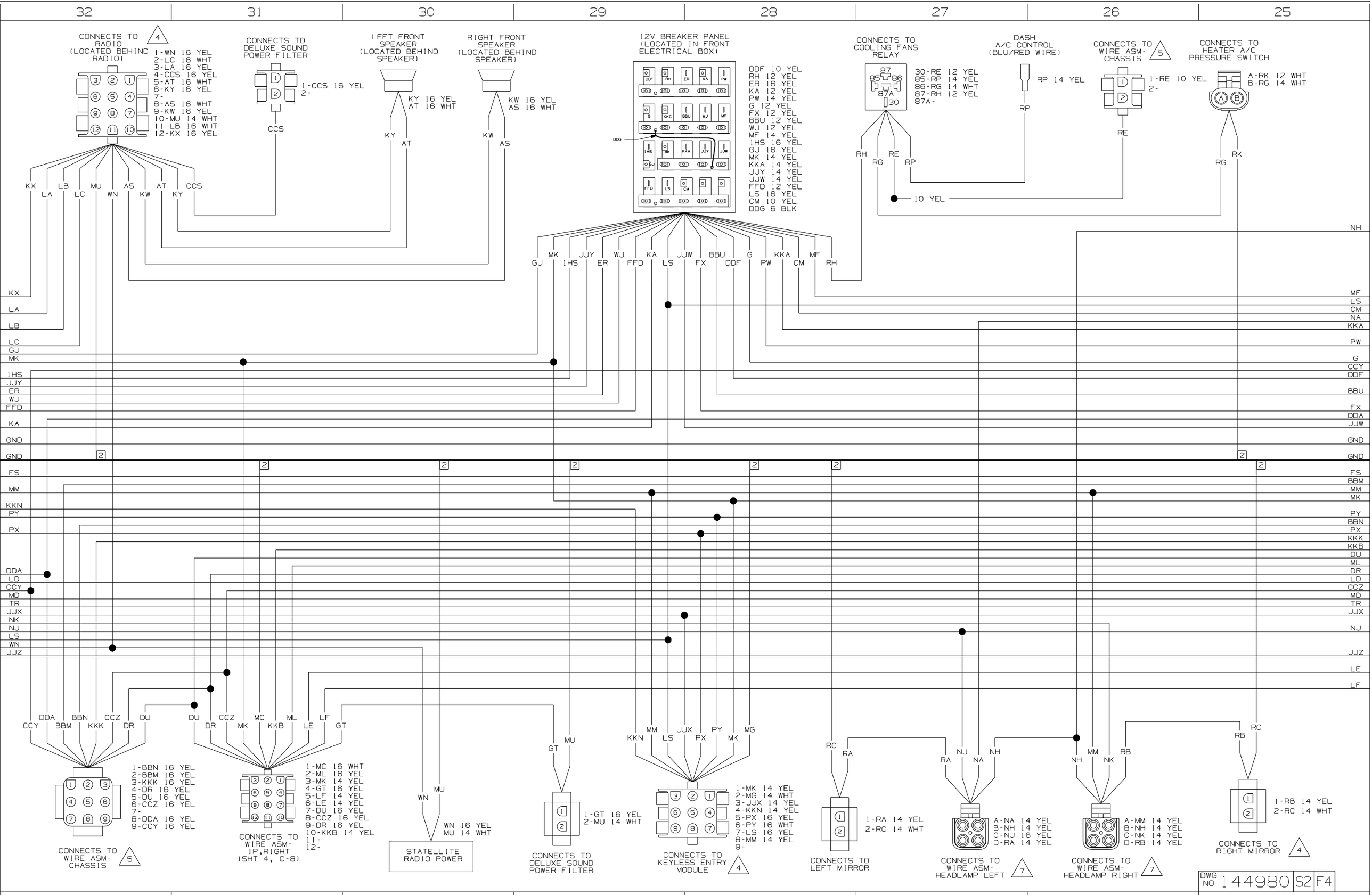
32
31
30
29
28
27
26
25
CONNECTS TO RADIO (LOCATED BEHIND RADIO)
4
1-WN 16 YEL
2-LC 16 WHT
3-LA 16 YEL
4-CCS 16 YEL
5-AT 16 WHT
6-KY 16 YEL
7-
8-AS 16 WHT
9-KW 16 YEL
10-MU 14 WHT
11-LB 16 WHT
12-KX 16 YEL
CONNECTS TO DELUXE SOUND POWER FILTER
1-CCS 16 YEL
2-
CCS
LEFT FRONT SPEAKER (LOCATED BEHIND SPEAKER)
KY 16 YEL
AT 16 WHT
KY
AT
RIGHT FRONT SPEAKER (LOCATED BEHIND SPEAKER)
KW 16 YEL
AS 16 WHT
KW
AS
12V BREAKER PANEL (LOCATED IN FRONT ELECTRICAL BOX)
DDF 10 YEL
RH 12 YEL
ER 16 YEL
KA 12 YEL
PW 14 YEL
G 12 YEL
FX 12 YEL
BBU 12 YEL
WJ 12 YEL
MF 14 YEL
IHS 16 YEL
GJ 16 YEL
MK 14 YEL
KKA 14 YEL
JJY 14 YEL
JJW 14 YEL
FFD 12 YEL
LS 16 YEL
CM 10 YEL
DDG 6 BLK
DDG
CONNECTS TO COOLING FANS RELAY
30-RE 12 YEL
85-RP 14 YEL
86-RG 14 WHT
87-RH 12 YEL
87A-
DASH A/C CONTROL (BLU/RED WIRE)
RP 14 YEL
RP
CONNECTS TO WIRE ASM-CHASSIS
5
1-RE 10 YEL
2-
RE
CONNECTS TO HEATER A/C PRESSURE SWITCH
A-RK 12 WHT
B-RG 14 WHT
RH
RG
RE
RP
RK
10 YEL
KX
LA
LB
MU
WN
AS
KW
AT
CCS
GJ
MK
JJY
WJ
FFD
KA
LS
JJW
FX
BBU
DDF
G
PW
KKA
CM
MF
NH
GND
FS
MM
KKN
PY
PX
DDA
LD
CCY
MD
TR
JJX
NK
NJ
JJZ
LE
LF
BBM
BBN
KKK
DR
DU
CCZ
MC
ML
GT
1-BBN 16 YEL
2-BBM 16 YEL
3-KKK 16 YEL
4-DR 16 YEL
5-DU 16 YEL
6-CCZ 16 YEL
7-
8-DDA 16 YEL
9-CCY 16 YEL
CONNECTS TO WIRE ASM-CHASSIS
5
1-MC 16 WHT
2-ML 16 YEL
3-MK 14 YEL
4-GT 16 YEL
5-LF 14 YEL
6-LE 14 YEL
7-DU 16 YEL
8-CCZ 16 YEL
9-DR 16 YEL
10-KKB 14 YEL
11-
12-
CONNECTS TO WIRE ASM-IP,RIGHT (SHT 4, C-8)
WN 16 YEL
MU 14 WHT
STATELLITE RADIO POWER
1-GT 16 YEL
2-MU 14 WHT
CONNECTS TO DELUXE SOUND POWER FILTER
1-MK 14 YEL
2-MG 14 WHT
3-JJX 14 YEL
4-KKN 14 YEL
5-PX 16 YEL
6-PY 16 WHT
7-LS 16 YEL
8-MM 14 YEL
9-
CONNECTS TO KEYLESS ENTRY MODULE
4
1-RA 14 YEL
2-RC 14 WHT
CONNECTS TO LEFT MIRROR
A-NA 14 YEL
B-NH 14 YEL
C-NJ 16 YEL
D-RA 14 YEL
CONNECTS TO WIRE ASM-HEADLAMP LEFT
7
A-MM 14 YEL
B-NH 14 YEL
C-NK 14 YEL
D-RB 14 YEL
CONNECTS TO WIRE ASM-HEADLAMP RIGHT
7
1-RB 14 YEL
2-RC 14 WHT
CONNECTS TO RIGHT MIRROR
4
DWG NO 144980 S2 F4

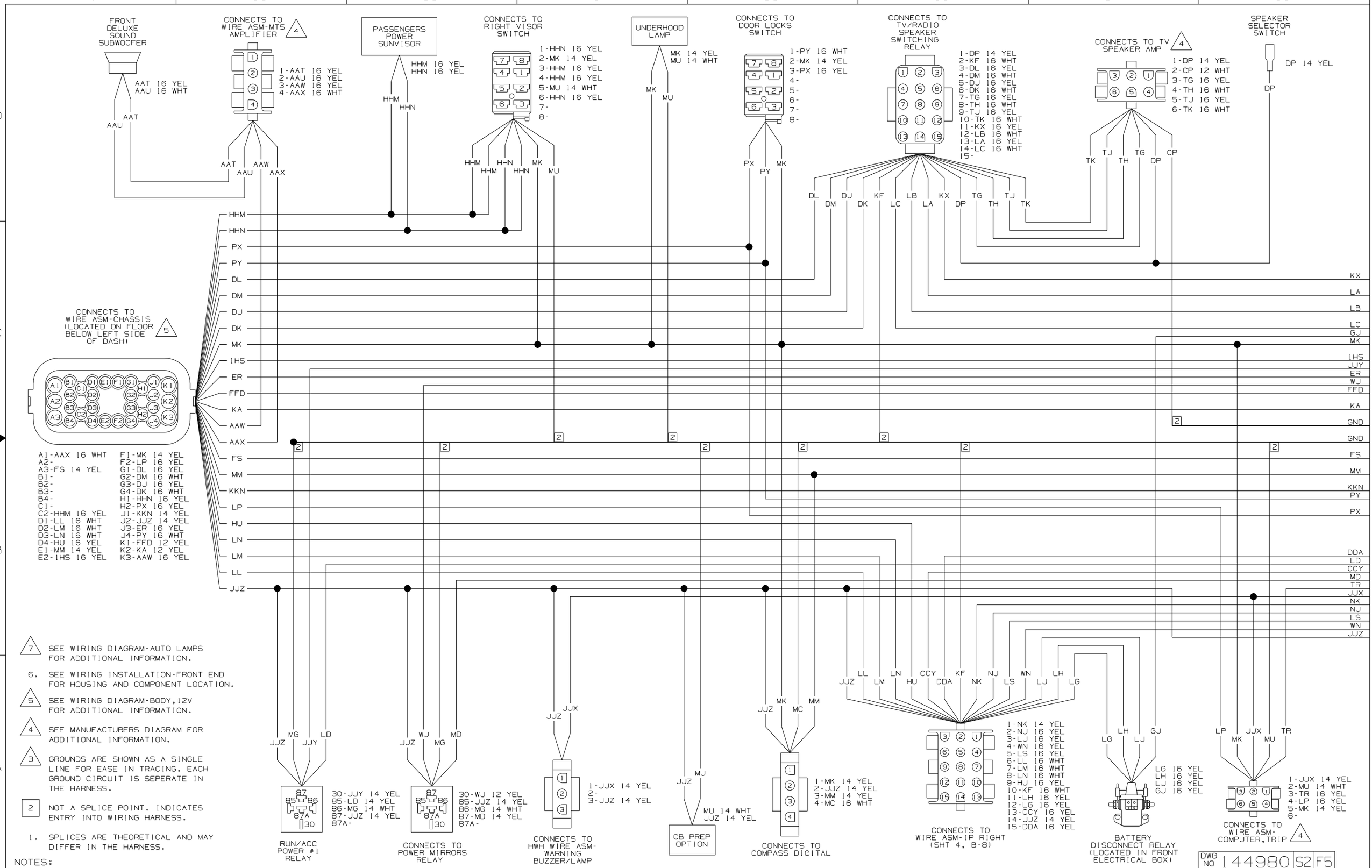
FRONT DELUXE SOUND SUBWOOFER
AAT 16 YEL
AAU 16 WHT
CONNECTS TO WIRE ASM-MTS AMPLIFIER 4
1-AAT 16 YEL
2-AAU 16 YEL
3-AAW 16 YEL
4-AAX 16 WHT
PASSENGERS POWER SUNVISOR
HHM 16 YEL
HHN 16 YEL
CONNECTS TO RIGHT VISOR SWITCH
1-HHN 16 YEL
2-MK 14 YEL
3-HHM 16 YEL
4-HHM 16 YEL
5-MU 14 WHT
6-HHN 16 YEL
UNDERHOOD LAMP
MK 14 YEL
MU 14 WHT
CONNECTS TO DOOR LOCKS SWITCH
1-PY 16 WHT
2-MK 14 YEL
3-PX 16 YEL
CONNECTS TO TV/RADIO SPEAKER SWITCHING RELAY
1-DP 14 YEL
2-KF 16 WHT
3-DL 16 YEL
4-DM 16 WHT
5-DJ 16 YEL
6-DK 16 WHT
7-TG 16 YEL
8-TH 16 WHT
9-TJ 16 YEL
10-TK 16 WHT
11-KX 16 YEL
12-LB 16 WHT
13-LA 16 YEL
14-LC 16 WHT
CONNECTS TO TV SPEAKER AMP 4
1-DP 14 YEL
2-CP 12 WHT
3-TG 16 YEL
4-TH 16 WHT
5-TJ 16 YEL
6-TK 16 WHT
SPEAKER SELECTOR SWITCH
DP 14 YEL
CONNECTS TO WIRE ASM-CHASSIS (LOCATED ON FLOOR BELOW LEFT SIDE OF DASH) 5
A1-AAX 16 WHT
A2-
A3-FS 14 YEL
B1-
B2-
B3-
B4-
C1-
C2-HHM 16 YEL
D1-LL 16 WHT
D2-LM 16 WHT
D3-LN 16 WHT
D4-HU 16 YEL
E1-MM 14 YEL
E2-IHS 16 YEL
F1-MK 14 YEL
F2-LP 16 YEL
G1-DL 16 YEL
G2-DM 16 WHT
G3-DJ 16 YEL
G4-DK 16 WHT
H1-HHN 16 YEL
H2-PX 16 YEL
J1-KKN 14 YEL
J2-JJZ 14 YEL
J3-ER 16 YEL
J4-PY 16 WHT
K1-FFD 12 YEL
K2-KA 12 YEL
K3-AAW 16 YEL
RUN/ACC POWER #1 RELAY
30-JJY 14 YEL
85-LD 14 YEL
86-MG 14 WHT
87-JJZ 14 YEL
87A-
CONNECTS TO POWER MIRRORS RELAY
30-WJ 12 YEL
85-JJZ 14 YEL
86-MG 14 WHT
87-MD 14 YEL
87A-
CONNECTS TO HWH WIRE ASM-WARNING BUZZER/LAMP
1-JJX 14 YEL
2-
3-JJZ 14 YEL
CB PREP OPTION
MU 14 WHT
JJZ 14 YEL
CONNECTS TO COMPASS DIGITAL
1-MK 14 YEL
2-JJZ 14 YEL
3-MM 14 YEL
4-MC 16 WHT
CONNECTS TO WIRE ASM-IP RIGHT (SHT 4, B-8)
1-NK 14 YEL
2-NJ 16 YEL
3-LJ 16 YEL
4-WN 16 YEL
5-LS 16 YEL
6-LL 16 WHT
7-LM 16 WHT
8-LN 16 WHT
9-HU 16 YEL
10-KF 16 WHT
11-LH 16 YEL
12-LG 16 YEL
13-CCY 16 YEL
14-JJZ 14 YEL
15-DDA 16 YEL
BATTERY DISCONNECT RELAY (LOCATED IN FRONT ELECTRICAL BOX)
LG 16 YEL
LH 16 YEL
LJ 16 YEL
GJ 16 YEL
CONNECTS TO WIRE ASM-COMPUTER,TRIP 4
1-JJX 14 YEL
2-MU 14 WHT
3-TR 16 YEL
4-LP 16 YEL
5-MK 14 YEL
7 SEE WIRING DIAGRAM-AUTO LAMPS FOR ADDITIONAL INFORMATION.
6. SEE WIRING INSTALLATION-FRONT END FOR HOUSING AND COMPONENT LOCATION.
5 SEE WIRING DIAGRAM-BODY,12V FOR ADDITIONAL INFORMATION.
4 SEE MANUFACTURERS DIAGRAM FOR ADDITIONAL INFORMATION.
3 GROUNDS ARE SHOWN AS A SINGLE LINE FOR EASE IN TRACING. EACH GROUND CIRCUIT IS SEPERATE IN THE HARNESS.
2 NOT A SPLICE POINT. INDICATES ENTRY INTO WIRING HARNESS.
1. SPLICES ARE THEORETICAL AND MAY DIFFER IN THE HARNESS.
NOTES:
DWG NO 144980 S2 F5

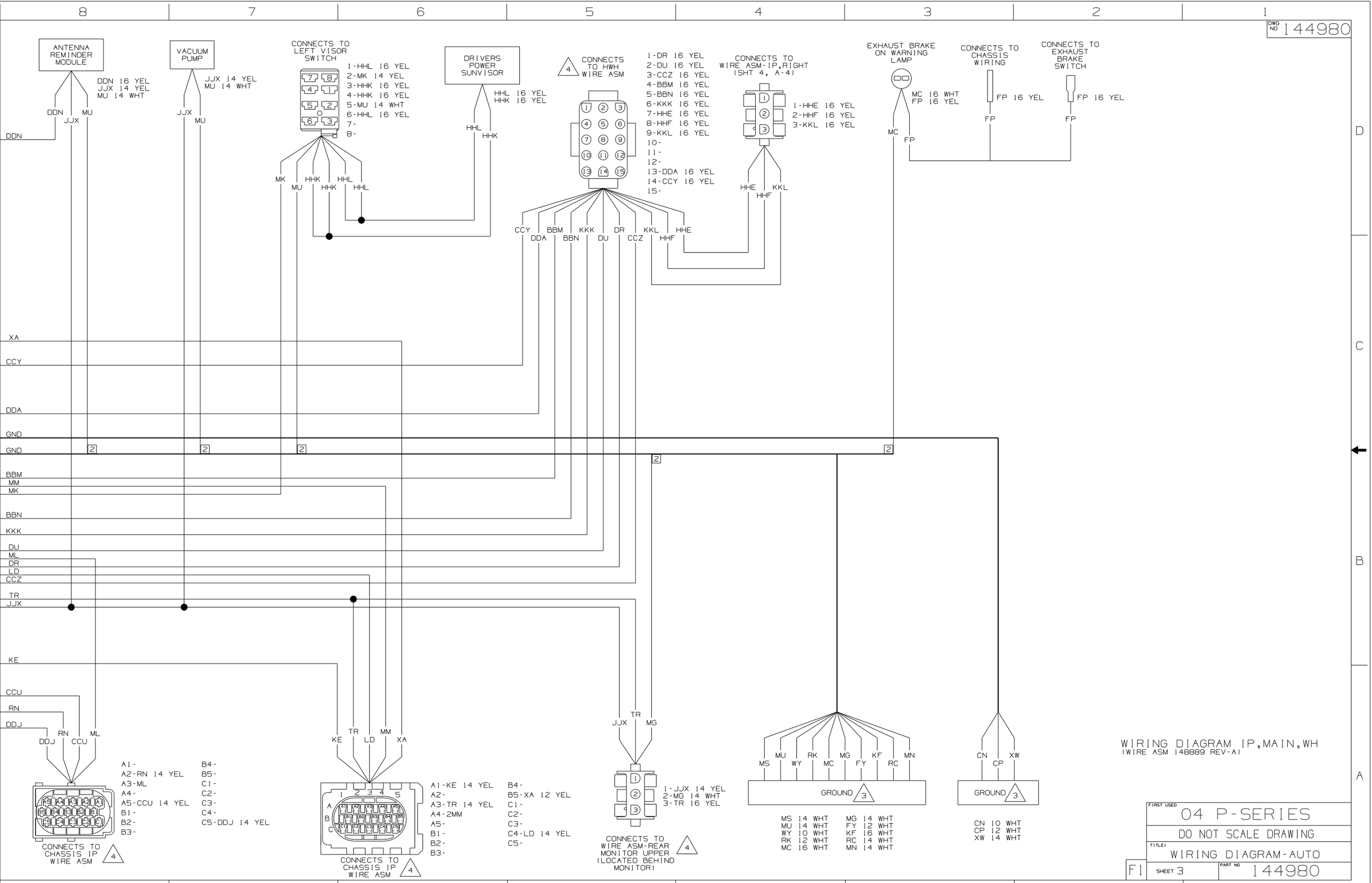
DWG NO 144980
ANTENNA REMINDER MODULE
DDN 16 YEL
JJX 14 YEL
MU 14 WHT
DDN
JJX
MU
VACUUM PUMP
JJX 14 YEL
MU 14 WHT
JJX
MU
CONNECTS TO LEFT VISOR SWITCH
1-HHL 16 YEL
2-MK 14 YEL
3-HHK 16 YEL
4-HHK 16 YEL
5-MU 14 WHT
6-HHL 16 YEL
7-
8-
MK
MU
HHK
HHK
HHL
HHL
DRIVERS POWER SUNVISOR
HHL 16 YEL
HHK 16 YEL
HHL
HHK
4
CONNECTS TO HWH WIRE ASM
1-DR 16 YEL
2-DU 16 YEL
3-CCZ 16 YEL
4-BBM 16 YEL
5-BBN 16 YEL
6-KKK 16 YEL
7-HHE 16 YEL
8-HHF 16 YEL
9-KKL 16 YEL
10-
11-
12-
13-DDA 16 YEL
14-CCY 16 YEL
15-
CCY
DDA
BBM
BBN
KKK
DU
DR
CCZ
KKL
HHF
HHE
CONNECTS TO WIRE ASM-IP,RIGHT (SHT 4, A-4)
1-HHE 16 YEL
2-HHF 16 YEL
3-KKL 16 YEL
HHE
HHF
KKL
EXHAUST BRAKE ON WARNING LAMP
MC 16 WHT
FP 16 YEL
MC
FP
CONNECTS TO CHASSIS WIRING
FP 16 YEL
FP
CONNECTS TO EXHAUST BRAKE SWITCH
FP 16 YEL
FP
XA
CCY
DDA
GND
GND
BBM
MM
MK
BBN
KKK
DU
ML
DR
LD
CCZ
TR
JJX
KE
CCU
RN
DDJ
DDJ
RN
CCU
ML
A1-
A2-RN 14 YEL
A3-ML
A4-
A5-CCU 14 YEL
B1-
B2-
B3-
B4-
B5-
C1-
C2-
C3-
C4-
C5-DDJ 14 YEL
CONNECTS TO CHASSIS IP WIRE ASM
4
KE
TR
LD
MM
XA
A1-KE 14 YEL
A2-
A3-TR 14 YEL
A4-2MM
A5-
B1-
B2-
B3-
B4-
B5-XA 12 YEL
C1-
C2-
C3-
C4-LD 14 YEL
C5-
CONNECTS TO CHASSIS IP WIRE ASM
4
JJX
TR
MG
1-JJX 14 YEL
2-MG 14 WHT
3-TR 16 YEL
CONNECTS TO WIRE ASM-REAR MONITOR UPPER (LOCATED BEHIND MONITOR)
4
MS
MU
WY
RK
MC
MG
FY
KF
RC
MN
GROUND
3
MS 14 WHT
MU 14 WHT
WY 10 WHT
RK 12 WHT
MC 16 WHT
MG 14 WHT
FY 12 WHT
KF 16 WHT
RC 14 WHT
MN 14 WHT
CN
CP
XW
GROUND
3
CN 10 WHT
CP 12 WHT
XW 14 WHT
WIRING DIAGRAM IP,MAIN,WH
(WIRE ASM 148889 REV-A)
FIRST USED
04 P-SERIES
DO NOT SCALE DRAWING
TITLE:
WIRING DIAGRAM-AUTO
F1
SHEET 3
PART NO
144980

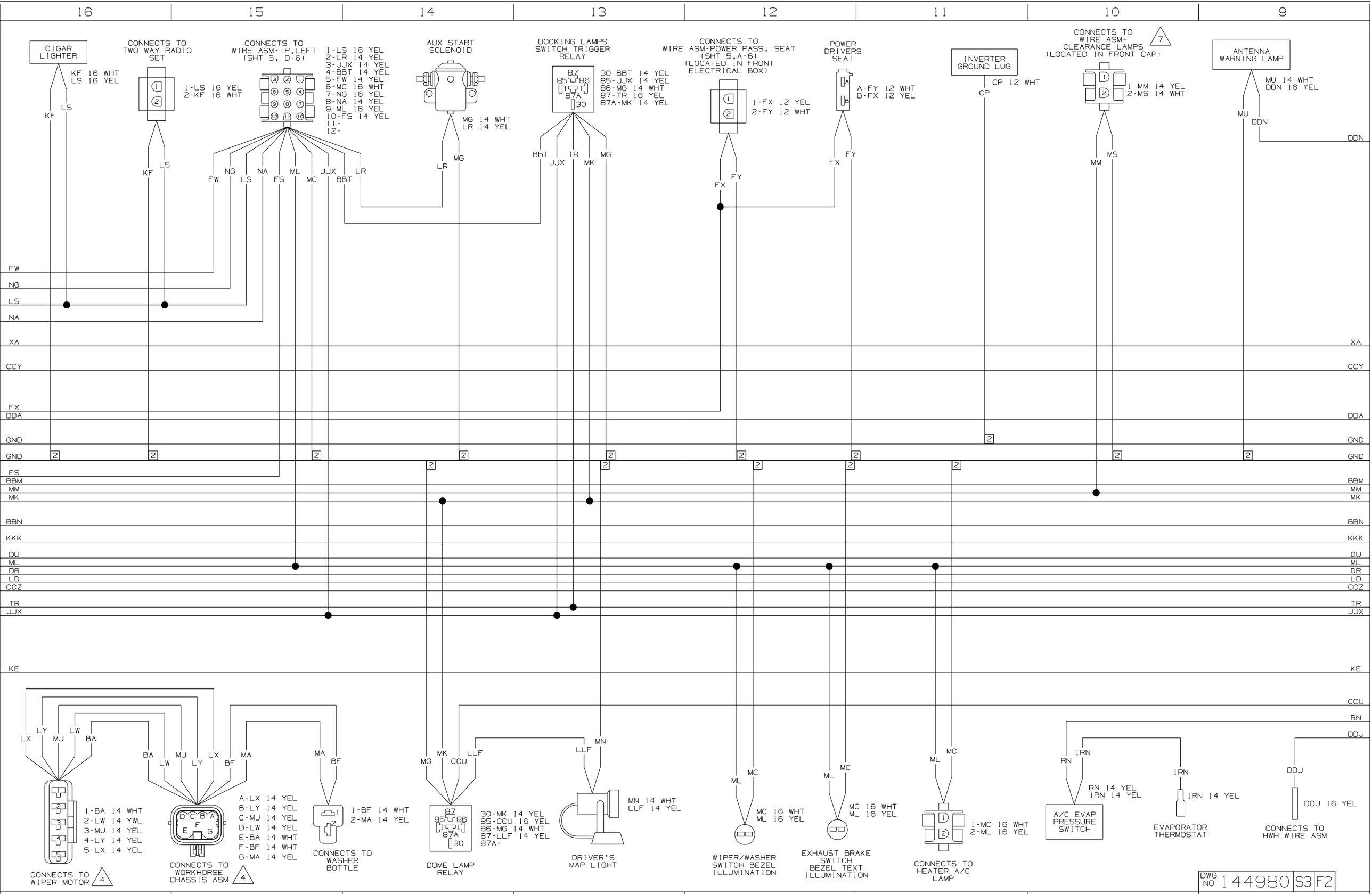
16
15
14
13
12
11
10
9
CIGAR LIGHTER
KF 16 WHT
LS 16 YEL
CONNECTS TO TWO WAY RADIO SET
1-LS 16 YEL
2-KF 16 WHT
CONNECTS TO WIRE ASM-IP,LEFT (SHT 5, D-6)
1-LS 16 YEL
2-LR 14 YEL
3-JJX 14 YEL
4-BBT 14 YEL
5-FW 14 YEL
6-MC 16 WHT
7-NG 16 YEL
8-NA 14 YEL
9-ML 16 YEL
10-FS 14 YEL
11-
12-
AUX START SOLENOID
MG 14 WHT
LR 14 YEL
DOCKING LAMPS SWITCH TRIGGER RELAY
30-BBT 14 YEL
85-JJX 14 YEL
86-MG 14 WHT
87-TR 16 YEL
87A-MK 14 YEL
CONNECTS TO WIRE ASM-POWER PASS. SEAT (SHT 5,A-6) (LOCATED IN FRONT ELECTRICAL BOX)
1-FX 12 YEL
2-FY 12 WHT
POWER DRIVERS SEAT
A-FY 12 WHT
B-FX 12 YEL
INVERTER GROUND LUG
CP 12 WHT
CONNECTS TO WIRE ASM-CLEARANCE LAMPS (LOCATED IN FRONT CAP)
1-MM 14 YEL
2-MS 14 WHT
ANTENNA WARNING LAMP
MU 14 WHT
DDN 16 YEL
FW
NG
LS
NA
XA
CCY
FX
DDA
GND
FS
BBM
MM
MK
BBN
KKK
DU
ML
DR
LD
CCZ
TR
JJX
KE
CCU
RN
DDJ
1-BA 14 WHT
2-LW 14 YWL
3-MJ 14 YEL
4-LY 14 YEL
5-LX 14 YEL
CONNECTS TO WIPER MOTOR
A-LX 14 YEL
B-LY 14 YEL
C-MJ 14 YEL
D-LW 14 YEL
E-BA 14 WHT
F-BF 14 WHT
G-MA 14 YEL
CONNECTS TO WORKHORSE CHASSIS ASM
1-BF 14 WHT
2-MA 14 YEL
CONNECTS TO WASHER BOTTLE
30-MK 14 YEL
85-CCU 16 YEL
86-MG 14 WHT
87-LLF 14 YEL
87A-
DOME LAMP RELAY
MN 14 WHT
LLF 14 YEL
DRIVER'S MAP LIGHT
MC 16 WHT
ML 16 YEL
WIPER/WASHER SWITCH BEZEL ILLUMINATION
EXHAUST BRAKE SWITCH BEZEL TEXT ILLUMINATION
1-MC 16 WHT
2-ML 16 YEL
CONNECTS TO HEATER A/C LAMP
RN 14 YEL
IRN 14 YEL
A/C EVAP PRESSURE SWITCH
EVAPORATOR THERMOSTAT
DDJ 16 YEL
CONNECTS TO HWH WIRE ASM
DWG NO 144980 S3 F2

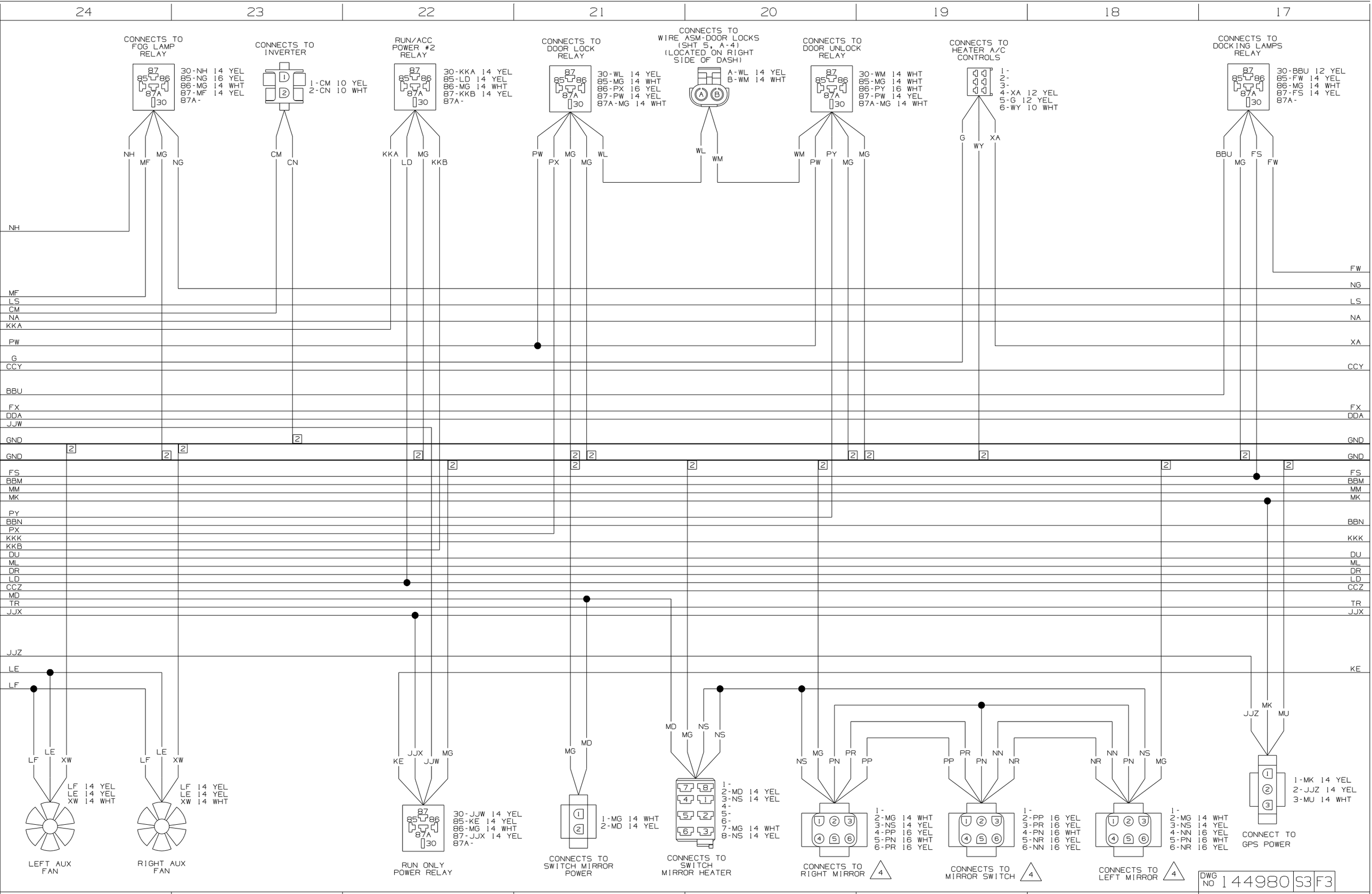
24
23
22
21
20
19
18
17
CONNECTS TO FOG LAMP RELAY
30-NH 14 YEL
85-NG 16 YEL
86-MG 14 WHT
87-MF 14 YEL
87A-
CONNECTS TO INVERTER
1-CM 10 YEL
2-CN 10 WHT
RUN/ACC POWER #2 RELAY
30-KKA 14 YEL
85-LD 14 YEL
86-MG 14 WHT
87-KKB 14 YEL
87A-
CONNECTS TO DOOR LOCK RELAY
30-WL 14 YEL
85-MG 14 WHT
86-PX 16 YEL
87-PW 14 YEL
87A-MG 14 WHT
CONNECTS TO WIRE ASM-DOOR LOCKS (SHT 5, A-4) (LOCATED ON RIGHT SIDE OF DASH)
A-WL 14 YEL
B-WM 14 WHT
CONNECTS TO DOOR UNLOCK RELAY
30-WM 14 WHT
85-MG 14 WHT
86-PY 16 WHT
87-PW 14 YEL
87A-MG 14 WHT
CONNECTS TO HEATER A/C CONTROLS
1-
2-
3-
4-XA 12 YEL
5-G 12 YEL
6-WY 10 WHT
CONNECTS TO DOCKING LAMPS RELAY
30-BBU 12 YEL
85-FW 14 YEL
86-MG 14 WHT
87-FS 14 YEL
87A-
NH
MF
LS
CM
NA
KKA
PW
G
CCY
BBU
FX
DDA
JJW
GND
FS
BBM
MM
MK
PY
BBN
PX
KKK
KKB
DU
ML
DR
LD
CCZ
MD
TR
JJX
JJZ
LE
LF
NG
XA
FW
KE
LF 14 YEL
LE 14 YEL
XW 14 WHT
LEFT AUX FAN
RIGHT AUX FAN
30-JJW 14 YEL
85-KE 14 YEL
86-MG 14 WHT
87-JJX 14 YEL
87A-
RUN ONLY POWER RELAY
1-MG 14 WHT
2-MD 14 YEL
CONNECTS TO SWITCH MIRROR POWER
1-
2-MD 14 YEL
3-NS 14 YEL
4-
5-
6-
7-MG 14 WHT
8-NS 14 YEL
CONNECTS TO SWITCH MIRROR HEATER
1-
2-MG 14 WHT
3-NS 14 YEL
4-PP 16 YEL
5-PN 16 WHT
6-PR 16 YEL
CONNECTS TO RIGHT MIRROR
4
1-
2-PP 16 YEL
3-PR 16 YEL
4-PN 16 WHT
5-NR 16 YEL
6-NN 16 YEL
CONNECTS TO MIRROR SWITCH
4
1-
2-MG 14 WHT
3-NS 14 YEL
4-NN 16 YEL
5-PN 16 WHT
6-NR 16 YEL
CONNECTS TO LEFT MIRROR
4
1-MK 14 YEL
2-JJZ 14 YEL
3-MU 14 WHT
CONNECT TO GPS POWER
DWG NO 144980 S3 F3

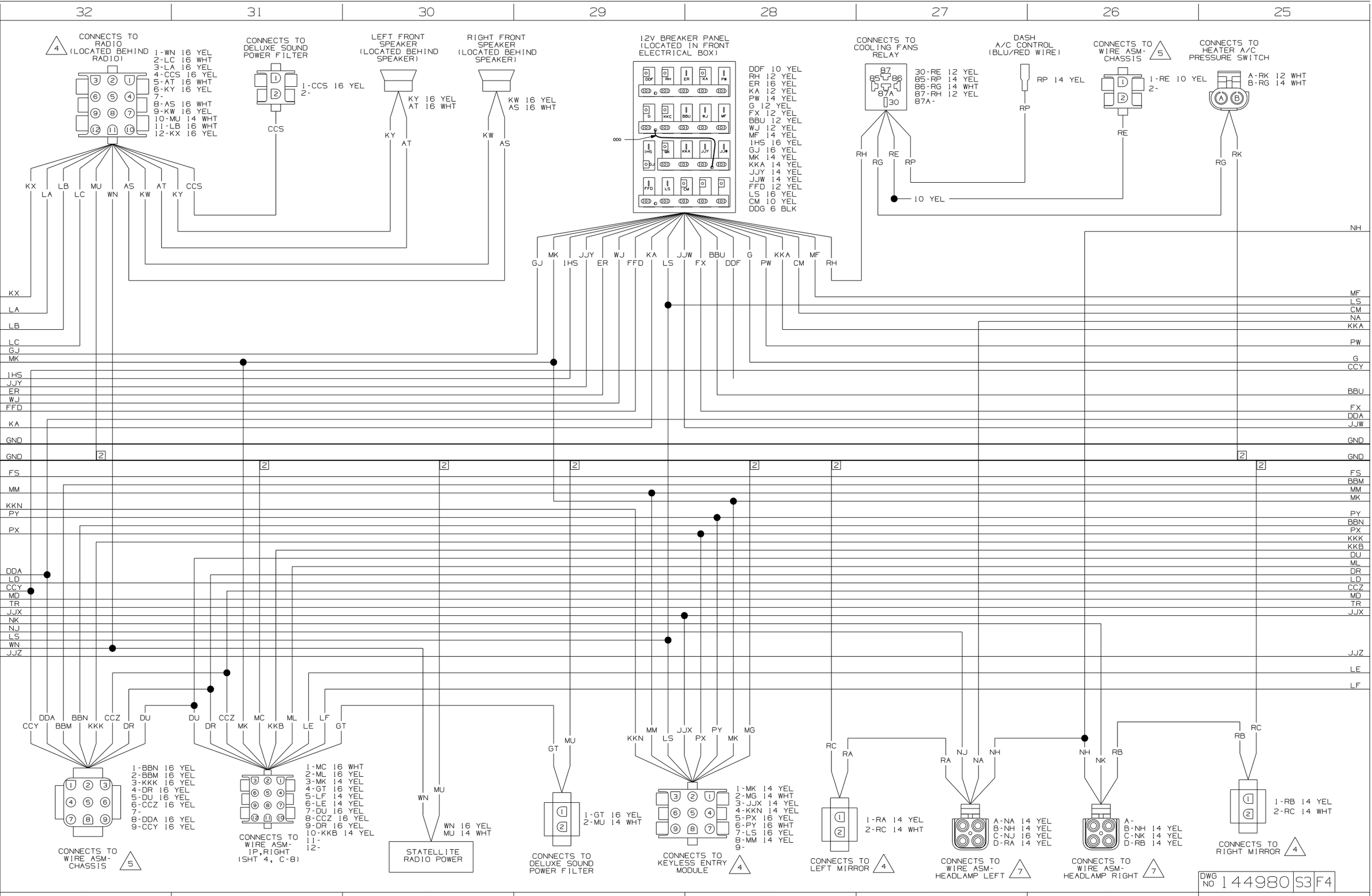
32
31
30
29
28
27
26
25
CONNECTS TO RADIO (LOCATED BEHIND RADIO)
1-WN 16 YEL
2-LC 16 WHT
3-LA 16 YEL
4-CCS 16 YEL
5-AT 16 WHT
6-KY 16 YEL
7-
8-AS 16 WHT
9-KW 16 YEL
10-MU 14 WHT
11-LB 16 WHT
12-KX 16 YEL
CONNECTS TO DELUXE SOUND POWER FILTER
1-CCS 16 YEL
2-
LEFT FRONT SPEAKER (LOCATED BEHIND SPEAKER)
KY 16 YEL
AT 16 WHT
RIGHT FRONT SPEAKER (LOCATED BEHIND SPEAKER)
KW 16 YEL
AS 16 WHT
12V BREAKER PANEL (LOCATED IN FRONT ELECTRICAL BOX)
DDF 10 YEL
RH 12 YEL
ER 16 YEL
KA 12 YEL
PW 14 YEL
G 12 YEL
FX 12 YEL
BBU 12 YEL
WJ 12 YEL
MF 14 YEL
IHS 16 YEL
GJ 16 YEL
MK 14 YEL
KKA 14 YEL
JJY 14 YEL
JJW 14 YEL
FFD 12 YEL
LS 16 YEL
CM 10 YEL
DDG 6 BLK
CONNECTS TO COOLING FANS RELAY
30-RE 12 YEL
85-RP 14 YEL
86-RG 14 WHT
87-RH 12 YEL
87A-
DASH A/C CONTROL (BLU/RED WIRE)
RP 14 YEL
CONNECTS TO WIRE ASM-CHASSIS
1-RE 10 YEL
2-
CONNECTS TO HEATER A/C PRESSURE SWITCH
A-RK 12 WHT
B-RG 14 WHT
10 YEL
1-BBN 16 YEL
2-BBM 16 YEL
3-KKK 16 YEL
4-DR 16 YEL
5-DU 16 YEL
6-CCZ 16 YEL
7-
8-DDA 16 YEL
9-CCY 16 YEL
CONNECTS TO WIRE ASM-CHASSIS
1-MC 16 WHT
2-ML 16 YEL
3-MK 14 YEL
4-GT 16 YEL
5-LF 14 YEL
6-LE 14 YEL
7-DU 16 YEL
8-CCZ 16 YEL
9-DR 16 YEL
10-KKB 14 YEL
11-
12-
CONNECTS TO WIRE ASM-IP,RIGHT (SHT 4, C-8)
WN 16 YEL
MU 14 WHT
STATELLITE RADIO POWER
1-GT 16 YEL
2-MU 14 WHT
CONNECTS TO DELUXE SOUND POWER FILTER
1-MK 14 YEL
2-MG 14 WHT
3-JJX 14 YEL
4-KKN 14 YEL
5-PX 16 YEL
6-PY 16 WHT
7-LS 16 YEL
8-MM 14 YEL
9-
CONNECTS TO KEYLESS ENTRY MODULE
1-RA 14 YEL
2-RC 14 WHT
CONNECTS TO LEFT MIRROR
A-NA 14 YEL
B-NH 14 YEL
C-NJ 16 YEL
D-RA 14 YEL
CONNECTS TO WIRE ASM-HEADLAMP LEFT
A-
B-NH 14 YEL
C-NK 14 YEL
D-RB 14 YEL
CONNECTS TO WIRE ASM-HEADLAMP RIGHT
1-RB 14 YEL
2-RC 14 WHT
CONNECTS TO RIGHT MIRROR
DWG NO 144980 S3 F4

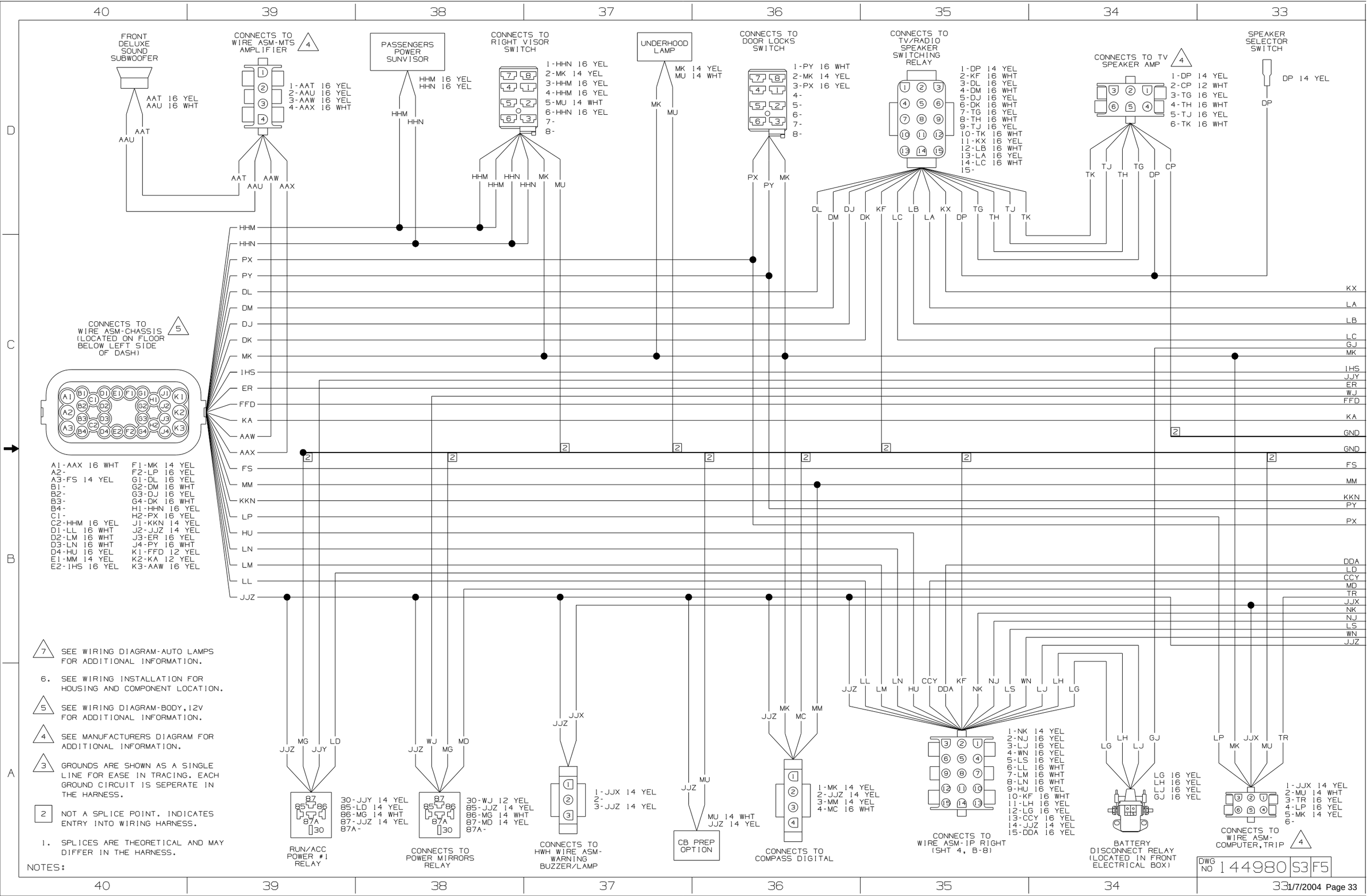
FRONT DELUXE SOUND SUBWOOFER
AAT 16 YEL
AAU 16 WHT
CONNECTS TO WIRE ASM-MTS AMPLIFIER 4
1-AAT 16 YEL
2-AAU 16 YEL
3-AAW 16 YEL
4-AAX 16 WHT
PASSENGERS POWER SUNVISOR
HHM 16 YEL
HHN 16 YEL
CONNECTS TO RIGHT VISOR SWITCH
1-HHN 16 YEL
2-MK 14 YEL
3-HHM 16 YEL
4-HHM 16 YEL
5-MU 14 WHT
6-HHN 16 YEL
UNDERHOOD LAMP
MK 14 YEL
MU 14 WHT
CONNECTS TO DOOR LOCKS SWITCH
1-PY 16 WHT
2-MK 14 YEL
3-PX 16 YEL
CONNECTS TO TV/RADIO SPEAKER SWITCHING RELAY
1-DP 14 YEL
2-KF 16 WHT
3-DL 16 YEL
4-DM 16 WHT
5-DJ 16 YEL
6-DK 16 WHT
7-TG 16 YEL
8-TH 16 WHT
9-TJ 16 YEL
10-TK 16 WHT
11-KX 16 YEL
12-LB 16 WHT
13-LA 16 YEL
14-LC 16 WHT
CONNECTS TO TV SPEAKER AMP 4
1-DP 14 YEL
2-CP 12 WHT
3-TG 16 YEL
4-TH 16 WHT
5-TJ 16 YEL
6-TK 16 WHT
SPEAKER SELECTOR SWITCH
DP 14 YEL
CONNECTS TO WIRE ASM-CHASSIS (LOCATED ON FLOOR BELOW LEFT SIDE OF DASH) 5
A1-AAX 16 WHT
A2-
A3-FS 14 YEL
B1-
B2-
B3-
B4-
C1-
C2-HHM 16 YEL
D1-LL 16 WHT
D2-LM 16 WHT
D3-LN 16 WHT
D4-HU 16 YEL
E1-MM 14 YEL
E2-IHS 16 YEL
F1-MK 14 YEL
F2-LP 16 YEL
G1-DL 16 YEL
G2-DM 16 WHT
G3-DJ 16 YEL
G4-DK 16 WHT
H1-HHN 16 YEL
H2-PX 16 YEL
J1-KKN 14 YEL
J2-JJZ 14 YEL
J3-ER 16 YEL
J4-PY 16 WHT
K1-FFD 12 YEL
K2-KA 12 YEL
K3-AAW 16 YEL
RUN/ACC POWER #1 RELAY
30-JJY 14 YEL
85-LD 14 YEL
86-MG 14 WHT
87-JJZ 14 YEL
87A-
CONNECTS TO POWER MIRRORS RELAY
30-WJ 12 YEL
85-JJZ 14 YEL
86-MG 14 WHT
87-MD 14 YEL
87A-
CONNECTS TO HWH WIRE ASM-WARNING BUZZER/LAMP
1-JJX 14 YEL
2-
3-JJZ 14 YEL
CB PREP OPTION
MU 14 WHT
JJZ 14 YEL
CONNECTS TO COMPASS DIGITAL
1-MK 14 YEL
2-JJZ 14 YEL
3-MM 14 YEL
4-MC 16 WHT
CONNECTS TO WIRE ASM-IP RIGHT (SHT 4, B-8)
1-NK 14 YEL
2-NJ 16 YEL
3-LJ 16 YEL
4-WN 16 YEL
5-LS 16 YEL
6-LL 16 WHT
7-LM 16 WHT
8-LN 16 WHT
9-HU 16 YEL
10-KF 16 WHT
11-LH 16 YEL
12-LG 16 YEL
13-CCY 16 YEL
14-JJZ 14 YEL
15-DDA 16 YEL
BATTERY DISCONNECT RELAY (LOCATED IN FRONT ELECTRICAL BOX)
LG 16 YEL
LH 16 YEL
LJ 16 YEL
GJ 16 YEL
CONNECTS TO WIRE ASM-COMPUTER,TRIP 4
1-JJX 14 YEL
2-MU 14 WHT
3-TR 16 YEL
4-LP 16 YEL
5-MK 14 YEL
6-
7 SEE WIRING DIAGRAM-AUTO LAMPS FOR ADDITIONAL INFORMATION.
6. SEE WIRING INSTALLATION FOR HOUSING AND COMPONENT LOCATION.
5 SEE WIRING DIAGRAM-BODY,12V FOR ADDITIONAL INFORMATION.
4 SEE MANUFACTURERS DIAGRAM FOR ADDITIONAL INFORMATION.
3 GROUNDS ARE SHOWN AS A SINGLE LINE FOR EASE IN TRACING. EACH GROUND CIRCUIT IS SEPERATE IN THE HARNESS.
2 NOT A SPLICE POINT. INDICATES ENTRY INTO WIRING HARNESS.
1. SPLICES ARE THEORETICAL AND MAY DIFFER IN THE HARNESS.
NOTES:
DWG NO 144980 S3 F5
1/7/2004 Page 33

DWG NO 144980

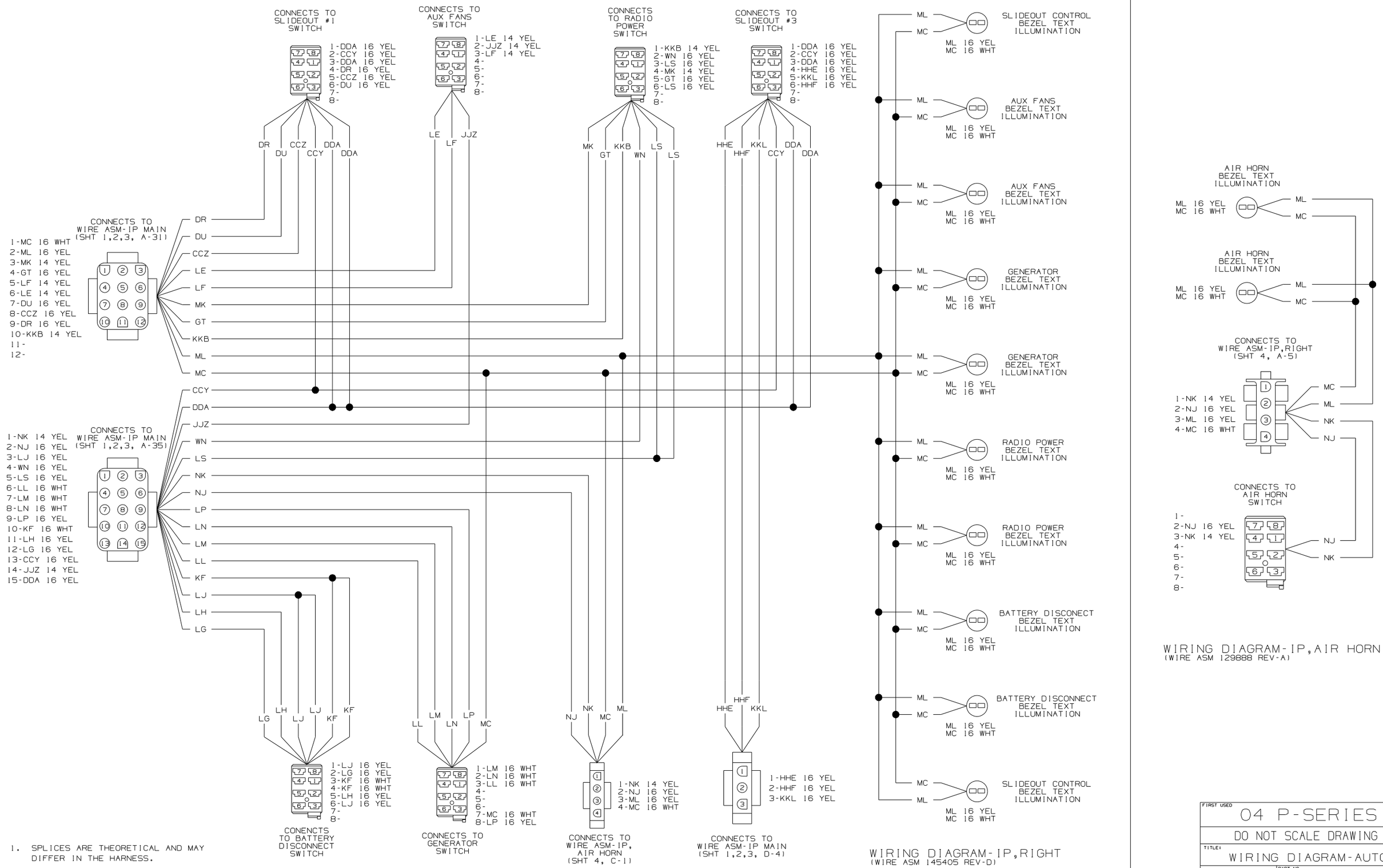

1. SPLICES ARE THEORETICAL AND MAY DIFFER IN THE HARNESS.

NOTES:

FIRST USED	04 P-SERIES
	DO NOT SCALE DRAWING
TITLE:	WIRING DIAGRAM-AUTO
SHEET 4	PART NO 144980

DWG NO 144980

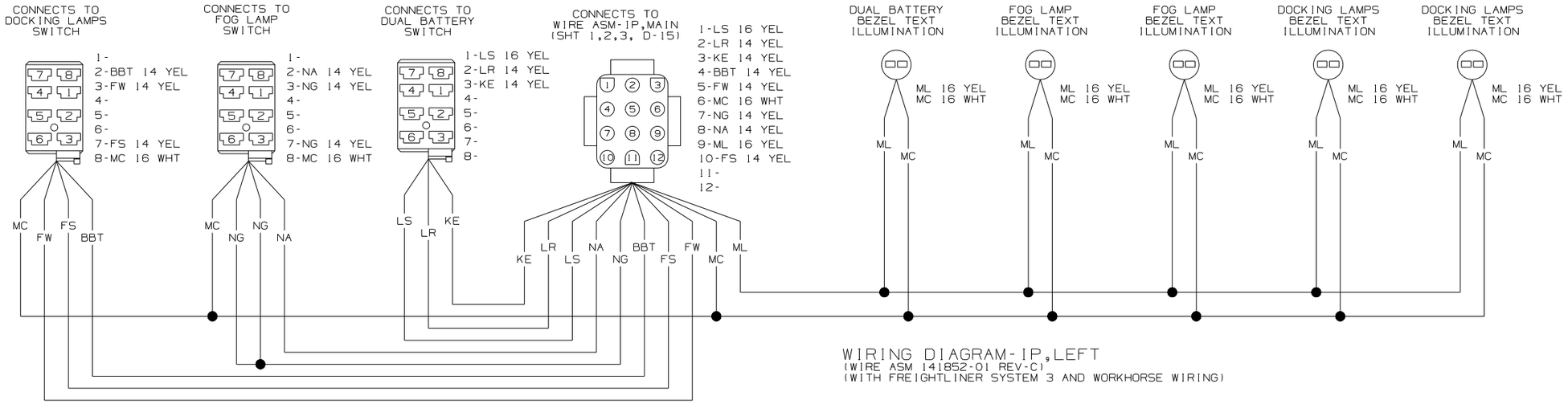

WIRING DIAGRAM-IP,LEFT
(WIRE ASM 141852-01 REV-C)
(WITH FREIGHTLINER SYSTEM 3 AND WORKHORSE WIRING)

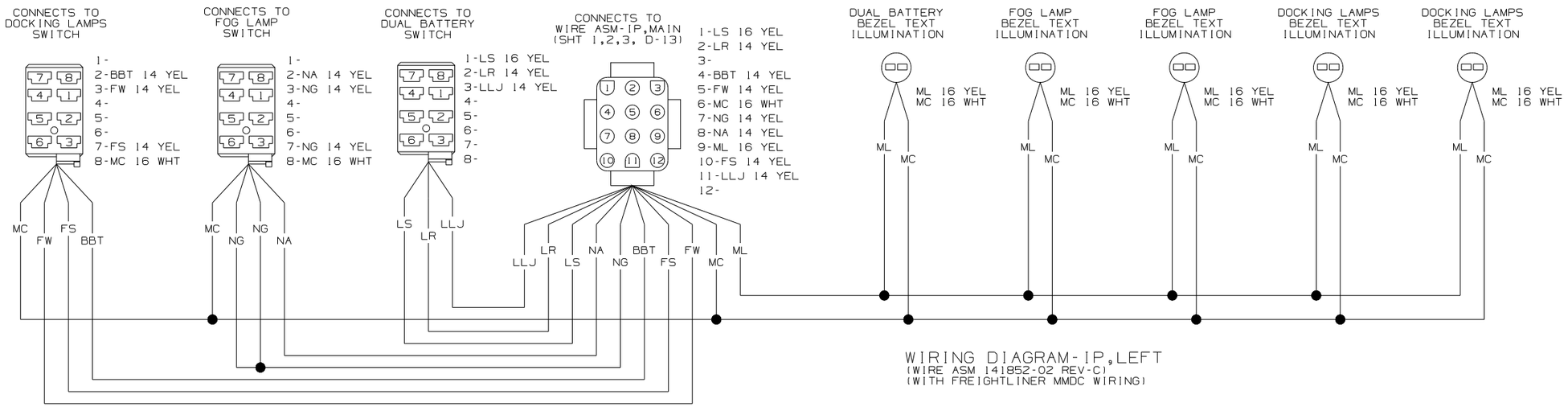

WIRING DIAGRAM-IP,LEFT
(WIRE ASM 141852-02 REV-C)
(WITH FREIGHTLINER MMDC WIRING)

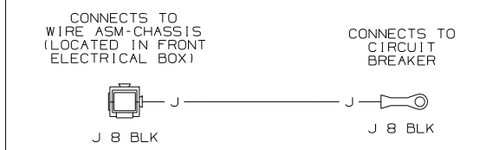

WIRING DIAGRAM-CRT BRK,POWER
(WIRE ASM 103991-01 REV-G)

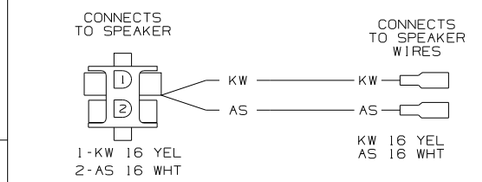

WIRING DIAGRAM-SPEAKER,ADAPTER
(WIRE ASM 124843-07 REV-H)

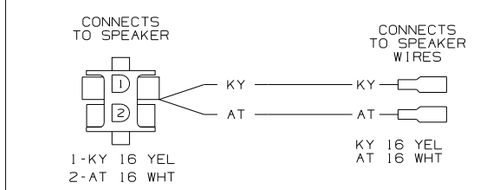

WIRING DIAGRAM-SPEAKER,ADAPTER
(WIRE ASM 124843-08 REV-H)

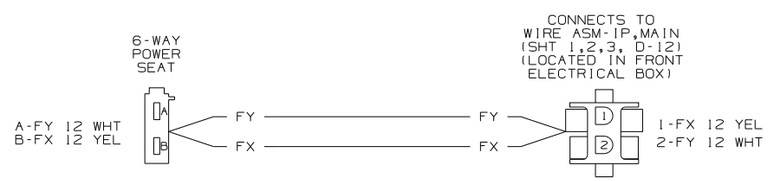

WIRING DIAGRAM-POWER DRIVER SEAT
(WIRE ASM 108029-05 REV-M)

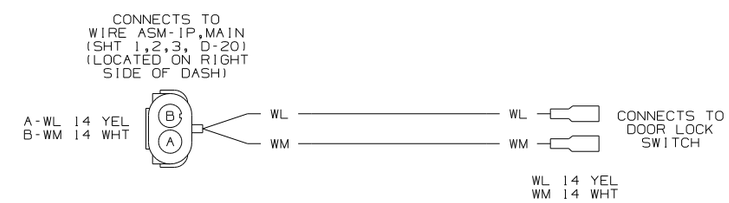

WIRING DIAGRAM-DOOR LOCK
(WIRE ASM 132267 REV-C)

1. SPLICES ARE THEORETICAL AND MAY DIFFER IN THE HARNESS.

NOTES:

FIRST USED	04 P-SERIES
	DO NOT SCALE DRAWING
TITLE:	WIRING DIAGRAM-AUTO
SHEET 5	PART NO 144980

RELEASE	REV A	DATE	DWG NO 145342
REV	ZONE	REVISION RECORD	DATE	DFTR-ORIG

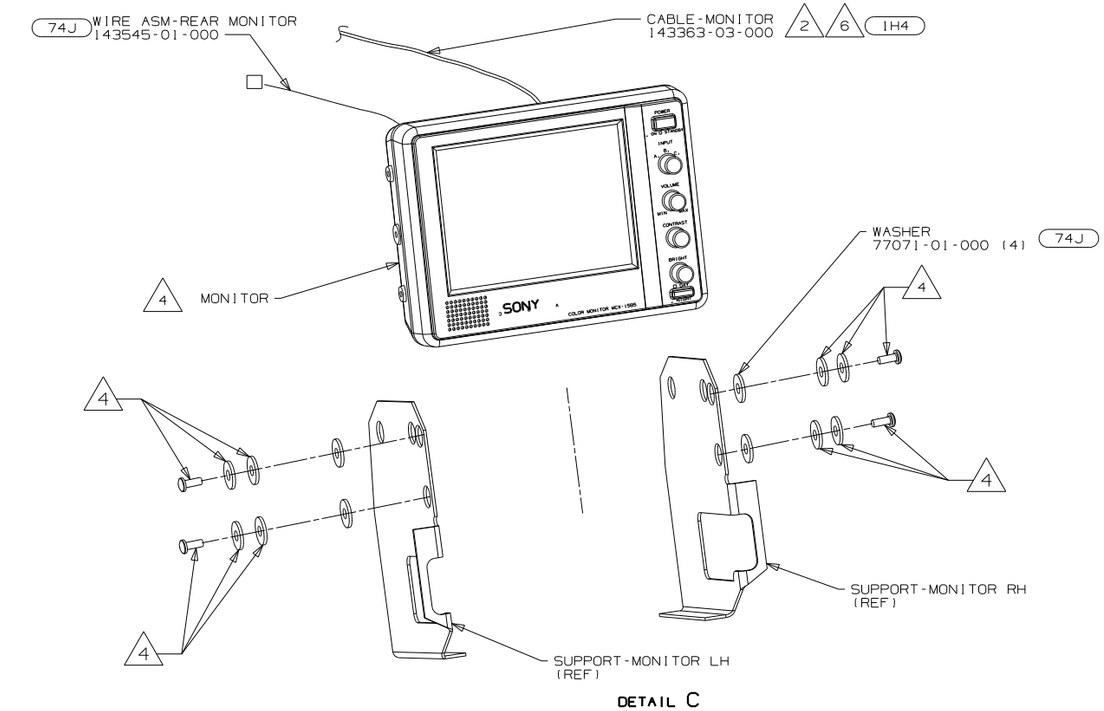

DETAIL C

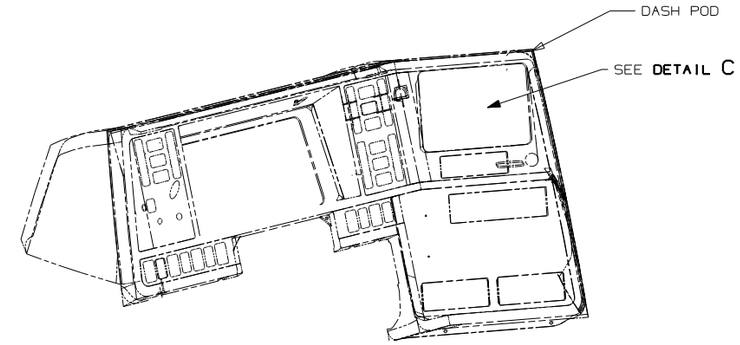

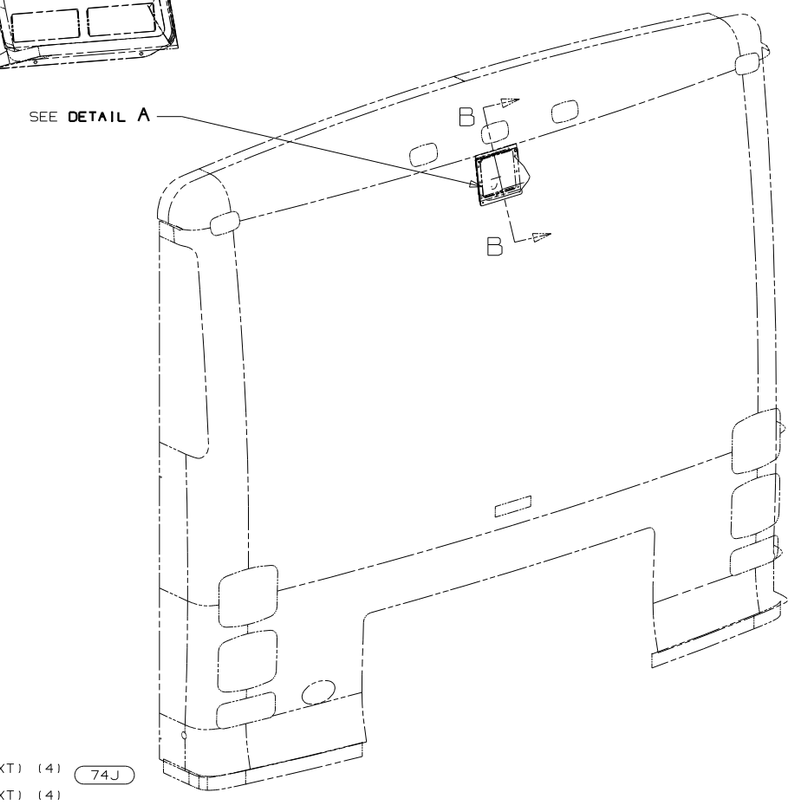

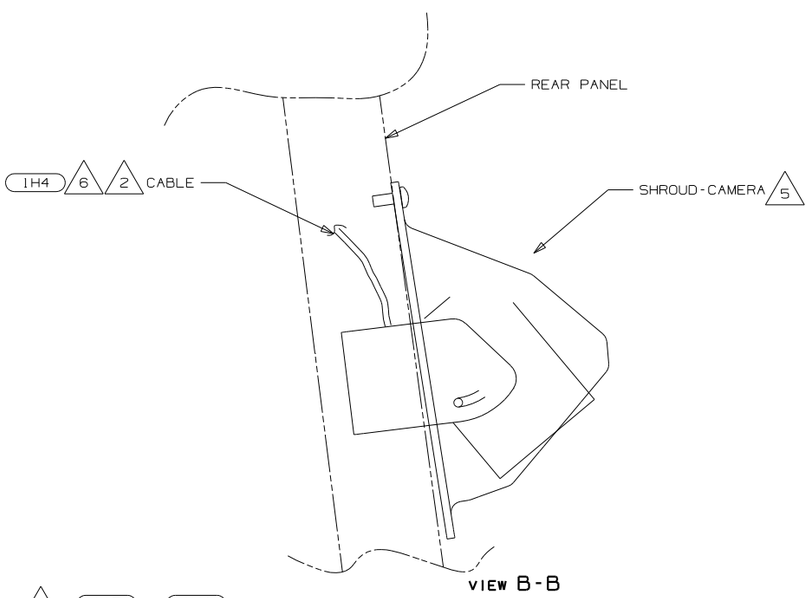

VIEW B-B

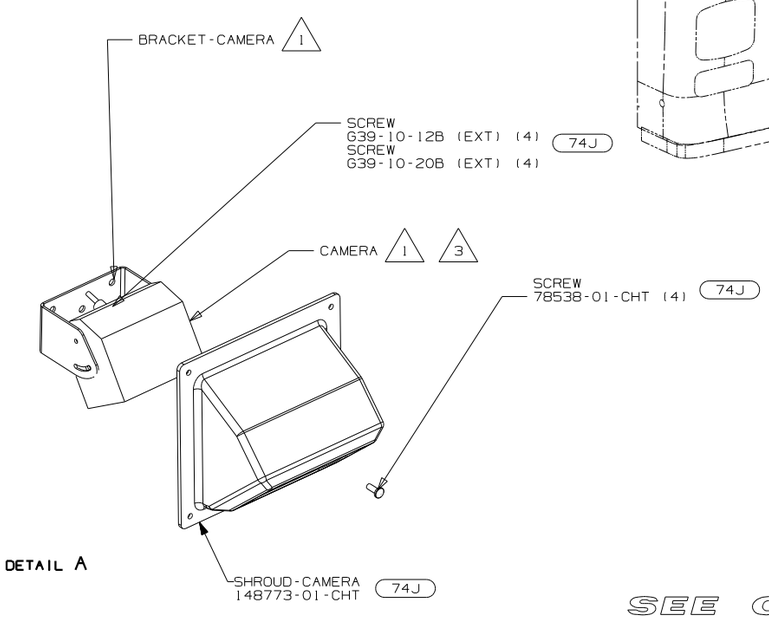

DETAIL A

74J REAR VIEW MONITOR SYSTEM
1H4 REAR VIEW MONITOR-WIRE PREP
1A5 REAR VIEW MONITOR SYS-W/O

6 1A5 OR 1H4 END STANDARD CABLE IN THIS AREA ON UNITS WITHOUT MONITOR.

5 SEE PANEL-REAR CAP FOR LOCATION.

4 PARTS SUPPLIED WITH MONITOR P/N 143363-01-000. 74J

3 ALIGN TV SYSTEM CENTER OF SHROUD OPENING

2 RUN CABLE THRU LEFT HAND COVE TO FRONT OF UNIT AND DOWN LEFT A-PILLAR TO MONITOR

1 PARTS SUPPLIED WITH REAR CAMERA 143363-05-000. 74J

NOTES:

SEE CHART
FOR COLOR VARIATIONS OF THIS PART

WINNEBAGO INDUSTRIES

COPYRIGHT 2003 WINNEBAGO INDUSTRIES, INC.

DFTR	ORIG. DATE
CHKR	ALL DIMENSIONS ARE IN MILLIMETERS
P.E.	
M.E.	FIRST USED
DSNR	04 P-SERIES

UNSPECIFIED TOLERANCES ARE:
WHOLE DIM (X) :
ONE-PLACE (X.X) :
TWO-PLACE (X.XX) :
ANGLE :

MATERIAL:

THIRD ANGLE PROJECTION

DO NOT SCALE DRAWING

TITLE: MONITOR INSTL

SHEET 1 OF 1 | PART NO 145342

RELEASE	REV A	DATE	DWG NO 144817

REV	ZONE	REVISION RECORD	DATE	DFTR-ORIG

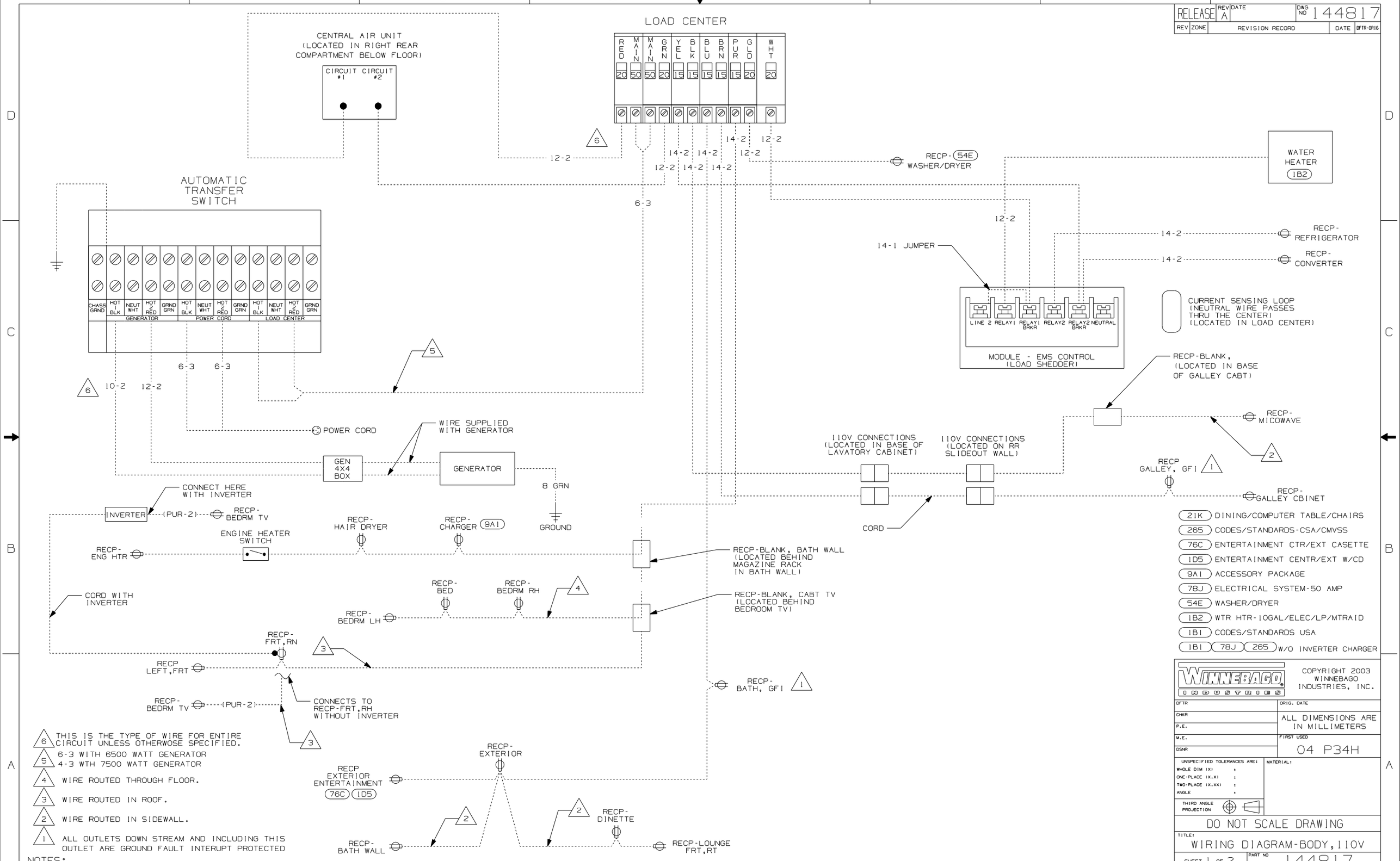

DWG NO 144817

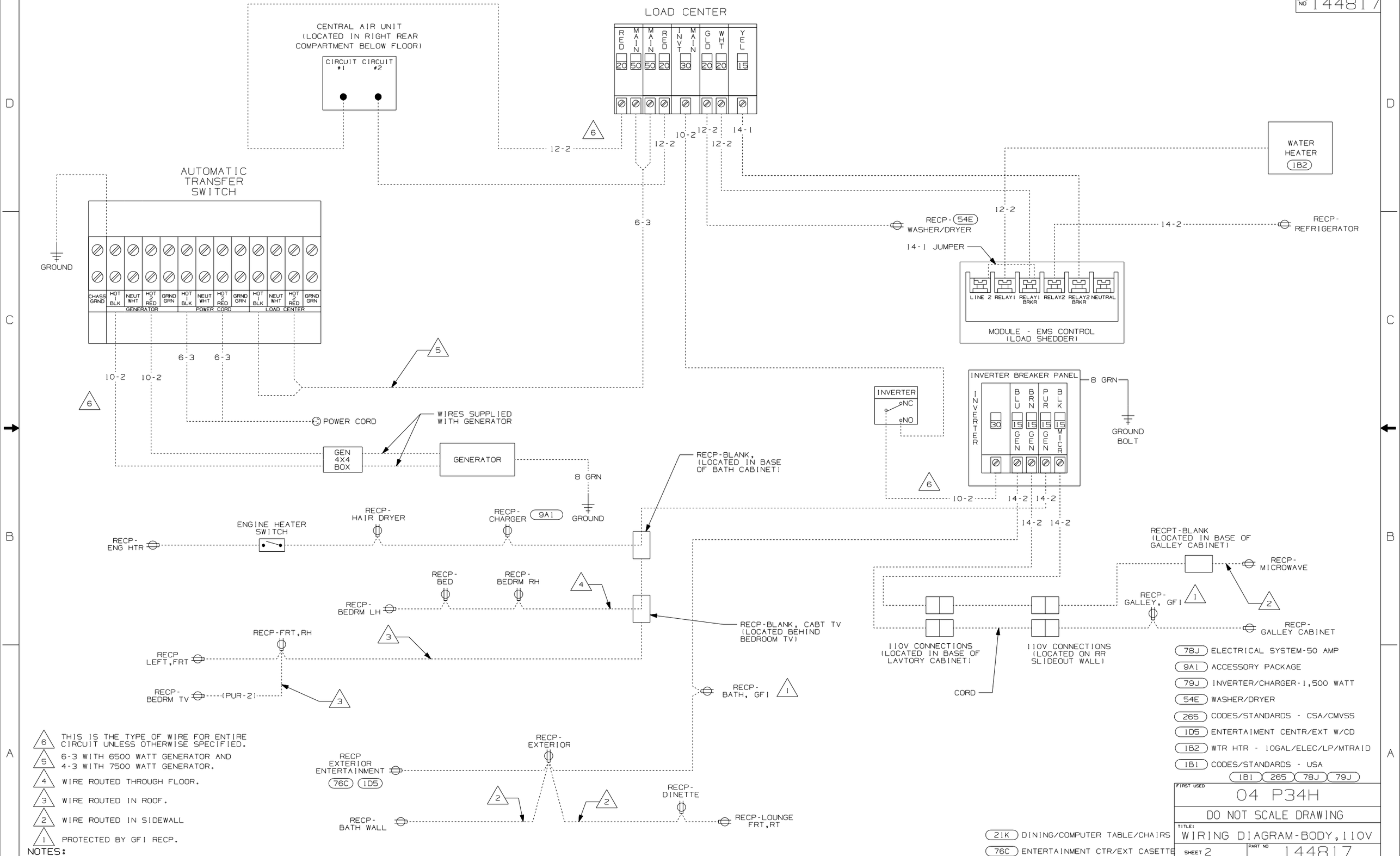

DRAWING NO.	FEATURE
144815-01	----------
144815-12	(1B1) (78J)
144815-14	(1B1) (78J) (13X)
144815-16	(265) (78J)
144815-18	(265) (78J) (13X)

RELEASE	REV A	DATE	DWG NO 144815
REV	ZONE	REVISION RECORD	DATE / DFTR-ORIG

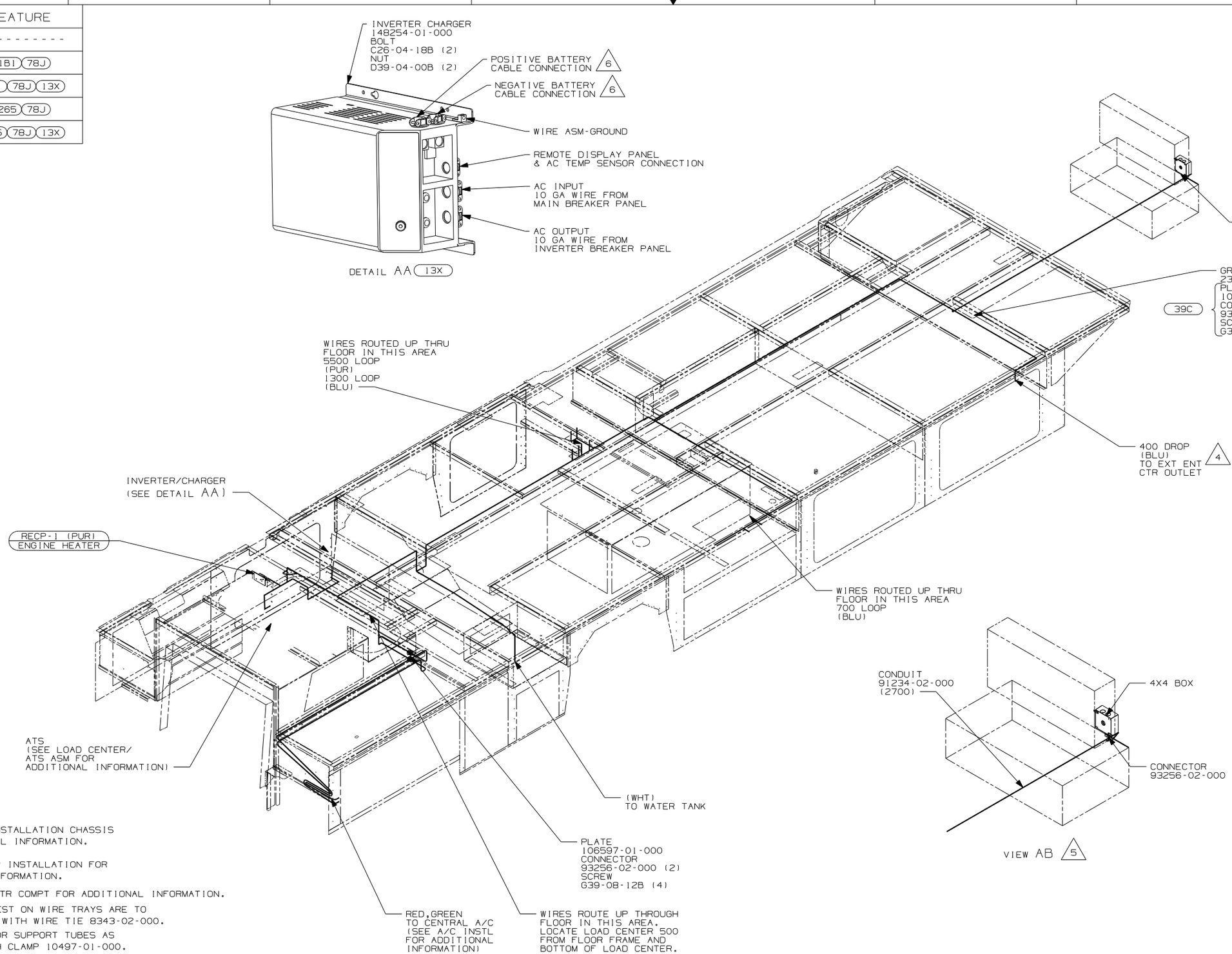

(39C) GEN-6.5KW-ONAN-LP-MARQ GOLD
(67Q) GEN-7.5KW-ONAN-QUIT DIESEL
(13X) INVERTER/CHARGER 2.0 KW
(78J) ELECTRICAL SYSTEM-50 AMP
(265) CODES/STANDARDS-CSA/CMVSS
(1B1) CODES/STANDARDS USA

(1B1) (265) (78J)

6 SEE WIRING INSTALLATION CHASSIS FOR ADDITIONAL INFORMATION.

5 SEE GENERATOR INSTALLATION FOR ADDITIONAL INFORMATION.

4 SEE EXT ENT CTR COMPT FOR ADDITIONAL INFORMATION.

3 WIRES THAT REST ON WIRE TRAYS ARE TO BE TIED DOWN WITH WIRE TIE 8343-02-000.

2 CLAMP TO FLOOR SUPPORT TUBES AS NECESSARYWITH CLAMP 10497-01-000.

1 ALL WIRES TO BE CLAMPED WITH CLAMP 10495-01-000 OR CLIP 80734-02-000 EVERY 700. USE SCREW G67-10-12B UNLESS OTHERWISE SPECIFIED.

NOTES:

FOR ELECTRICAL TORQUE SPECIFICATIONS SEE DWG NO. 128783-01-000

(X-X) FOR ELECTRICAL CALLOUTS SEE DWG NO. 121339-01-000

COPYRIGHT 2004 WINNEBAGO INDUSTRIES, INC.

DFTR	ORIG. DATE
CHKR	ALL DIMENSIONS ARE IN MILLIMETERS
P.E.	
M.E.	FIRST USED 04 P34H
DSNR	

UNSPECIFIED TOLERANCES ARE:
WHOLE DIM (X) :
ONE-PLACE (X.X) :
TWO-PLACE (X.XX) :
ANGLE :
THIRD ANGLE PROJECTION

MATERIAL:

DO NOT SCALE DRAWING

TITLE: WIRING INSTL-BODY,110V

SHEET 1 OF 4 | PART NO 144815

DWG NO 144815

RECP-BLANK GALLEY (BLK)

FROM 110V CONNECTION (SEE DETAIL DB) — FROM SIDEWALL

DETAIL BA

RECP-BLANK BATH CABT (PUR)

TO RECP-VACCUM

TO RECP-TV CABT (SEE DETAIL CA)

DETAIL BC

THROW IN WIRE #1 (PUR)

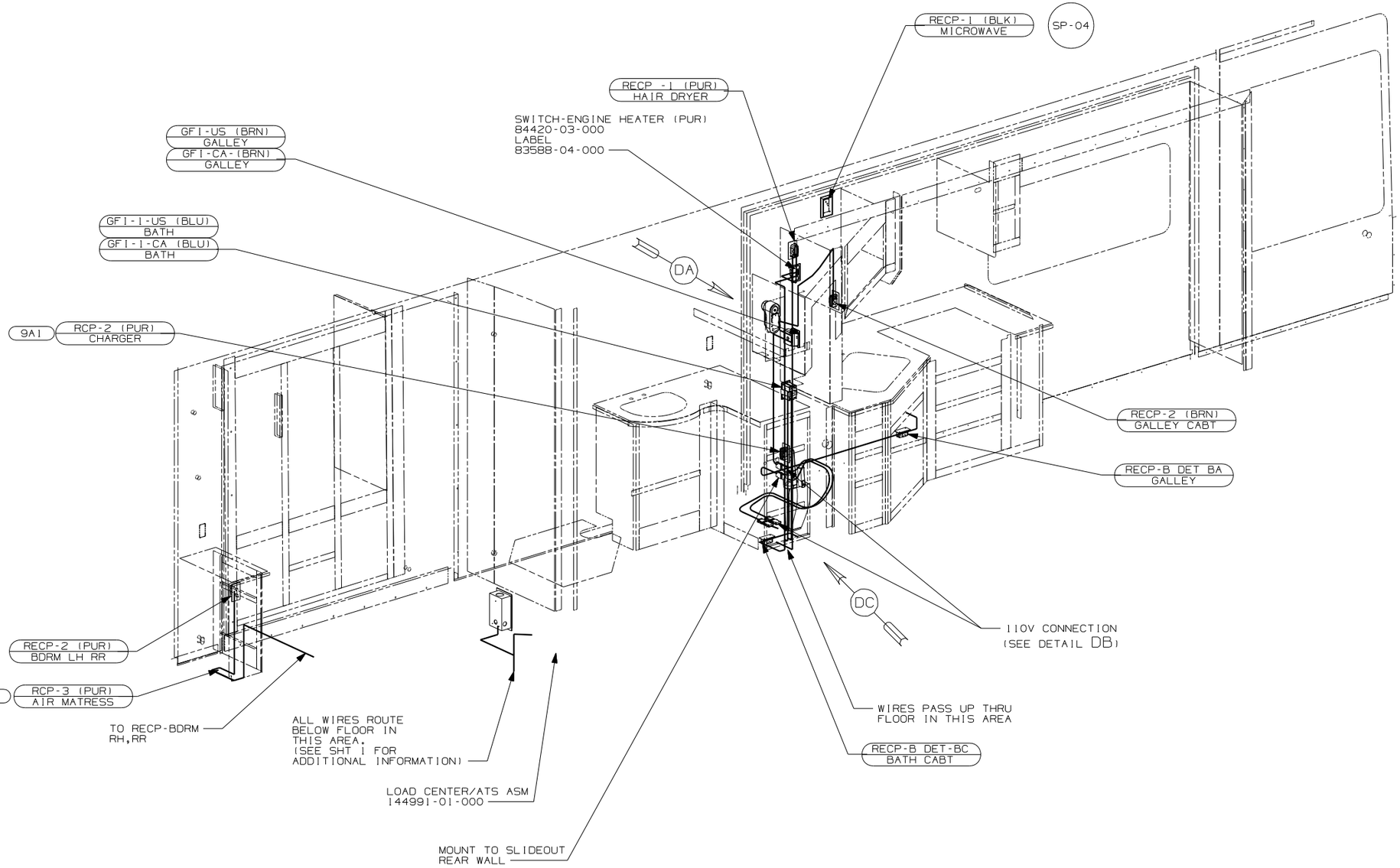

49M SLEEP NUMBER BED-QUEEN SIZE

9A1 ACCESSORY PACKAGE

78J ELECTRICAL SYSTEM-50 AMP

265 CODES/STANDARDS-CSA/CMVSS

1B1 CODES/STANDARDS USA

NOTES:

2. ALL WIRES ARE TO BE CLAMPED 10497-05-000 WITHIN 200 OF OUTLET BOXES AND SPLICES. USE SCREW G67-10-12B.

1. ALL WIRES ARE TO BE CLAMPED WITH CLAMP 10495-01-000 ARE CLIP 80734-02-000 EVERY 700. USE SCREW G67-10-12B UNLESS OTHERWISE SPECIFIED.

FOR ELECTRICAL TORQUE SPECIFICATIONS SEE DWG NO. 128783-01-000

X-X FOR ELECTRICAL CALLOUTS SEE DWG NO. 121339-01-000

1B1 265 78J

FIRST USED 04 P34H

DO NOT SCALE DRAWING

TITLE: WIRING INSTL-BODY,110V

SHEET 2 PART NO 144815

DWG NO 144815

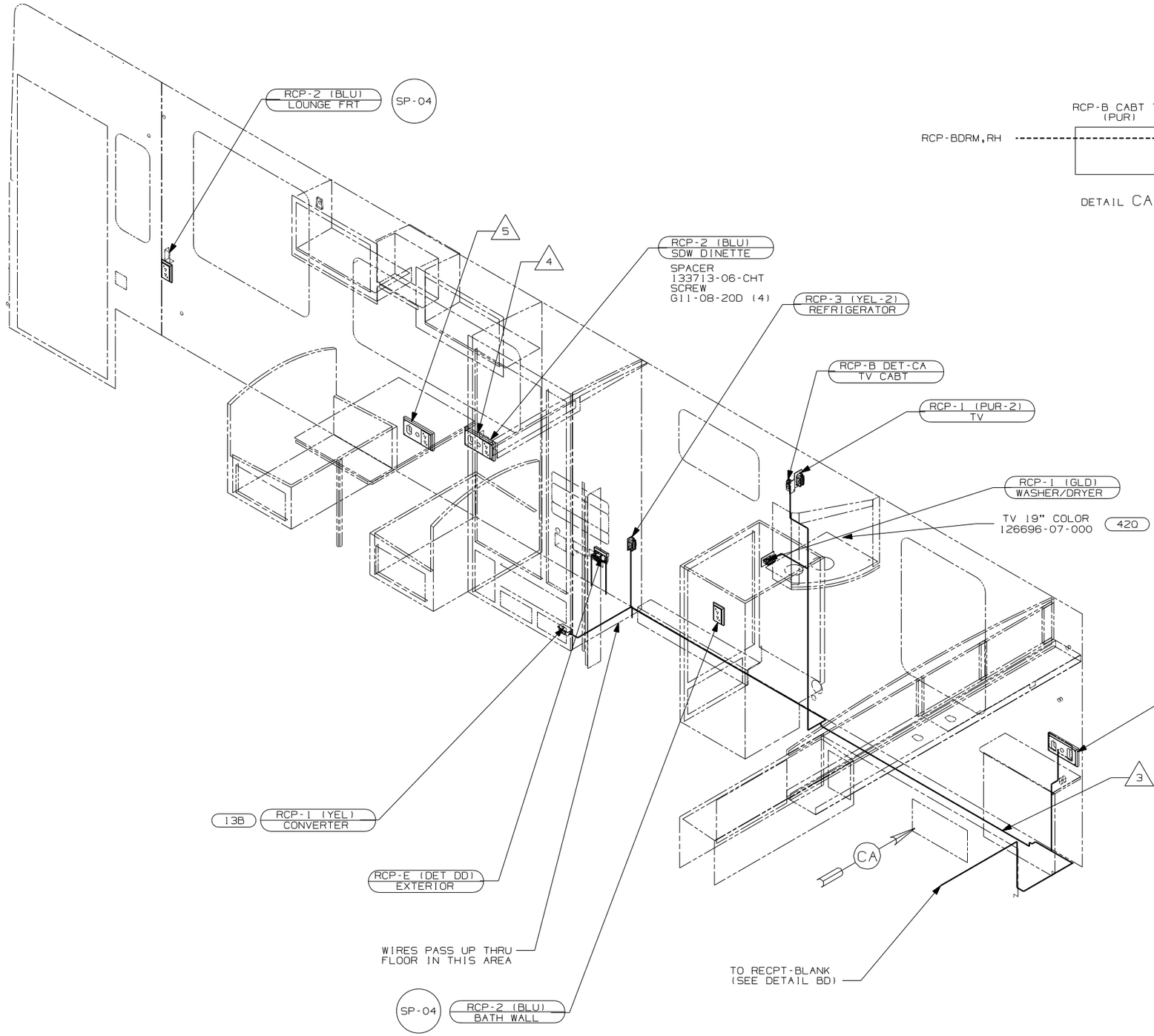

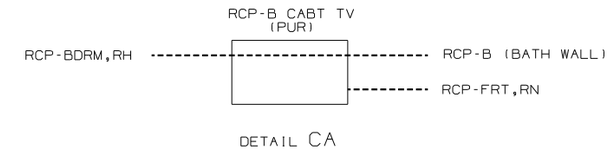

420 TV-19" WITH REMOTE
21L DINING TABLE/CHAIRS
21K DINING/COMPUTER TABLE/CHAIRS
14W DINETTE
265 CODES/STANDARDS-CSA/CMVSS
1B1 CODES/STANDARDS USA

1B1 265 78J

5. LOCATION WITH 21K .

4. LOCATION WITH 14W OR 21L .

3. ROUTE WIRES IN THE FLOOR DURING INSTALLATION

2. ALL WIRES ARE TO BE CLAMPED 10497-05-000 WITHIN 200 OF OUTLET BOXES AND SPLICES. USE SCREW G67-10-12B.

1. ALL WIRES ARE TO BE CLAMPED WITH CLAMP 10495-01-000 ARE CLIP 80734-02-000 EVERY 700. USE SCREW G67-10-12B UNLESS OTHERWISE SPECIFIED.

NOTES:

FOR ELECTRICAL TORQUE SPECIFICATIONS SEE DWG NO. 128783-01-000

X-X FOR ELECTRICAL CALLOUTS SEE DWG NO. 121339-01-000

FIRST USED 04 P34H

DO NOT SCALE DRAWING

TITLE: WIRING INSTL-BODY,110V

SHEET 3 PART NO 144815

DWG NO 144815

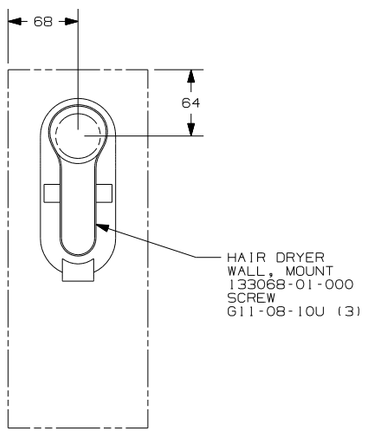

VIEW DA

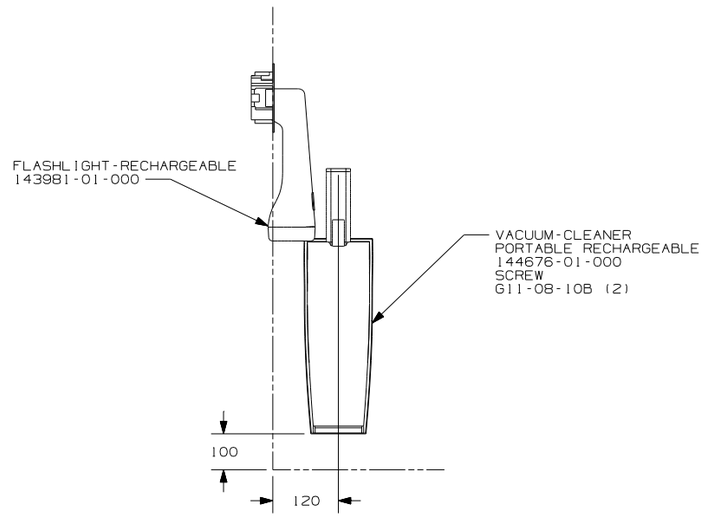

VIEW DC

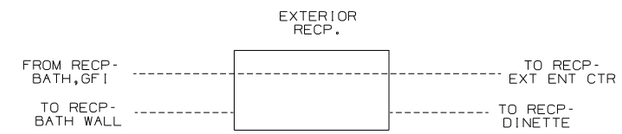

DETAIL DD

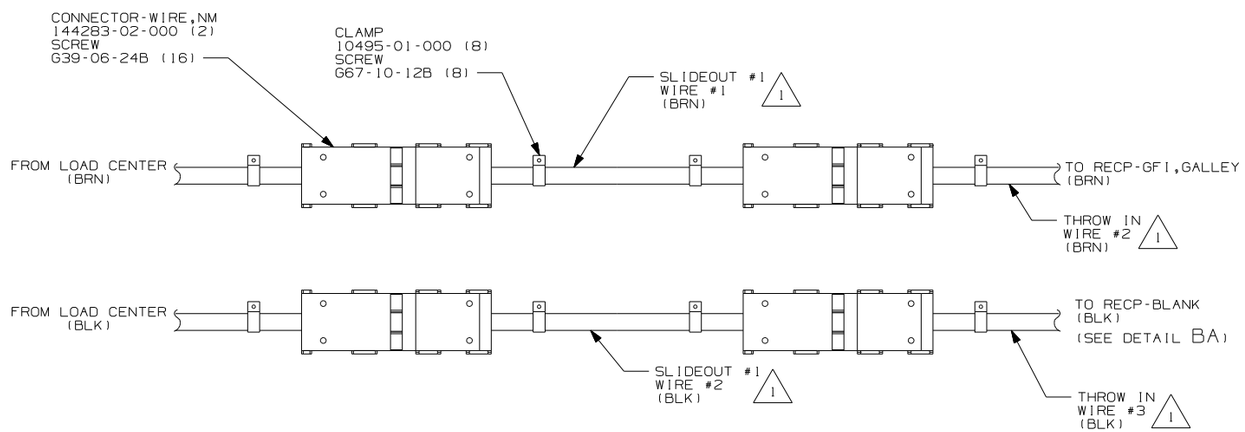

DETAIL DB

265 CODES/STANDARDS CSA/CMVSS

181 CODES/STANDARDS USA

181 265

1 SEE LOAD CENTER/ATS ASM FOR ADDITIONAL INFORMATION.

NOTES:

FOR ELECTRICAL TORQUE SPECIFICATIONS SEE DWG NO. 128783-01-000

X-X FOR ELECTRICAL CALLOUTS SEE DWG NO. 121339-01-000

FIRST USED 04 P34H

DO NOT SCALE DRAWING

TITLE: WIRING INSTL-BODY,110V

SHEET 4

PART NO 144815

RELEASE	REV A	DATE	DWG NO 144816

REV	ZONE	REVISION RECORD	DATE	DFTR-ORIG

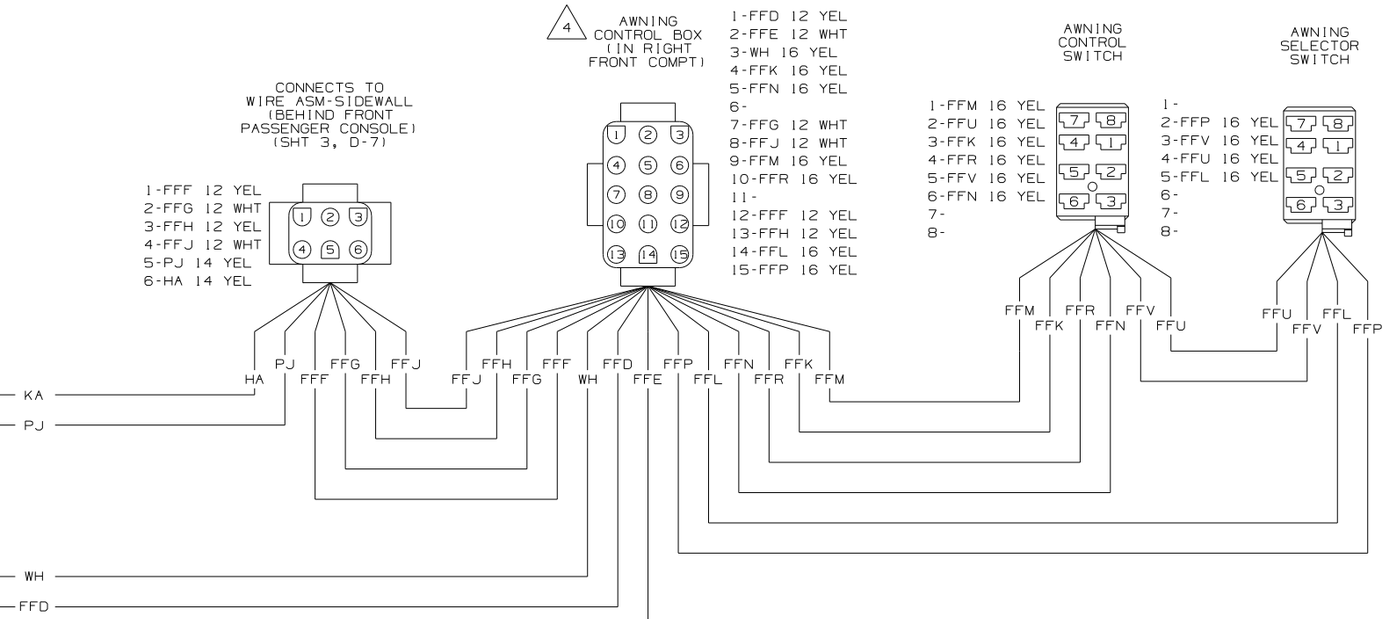

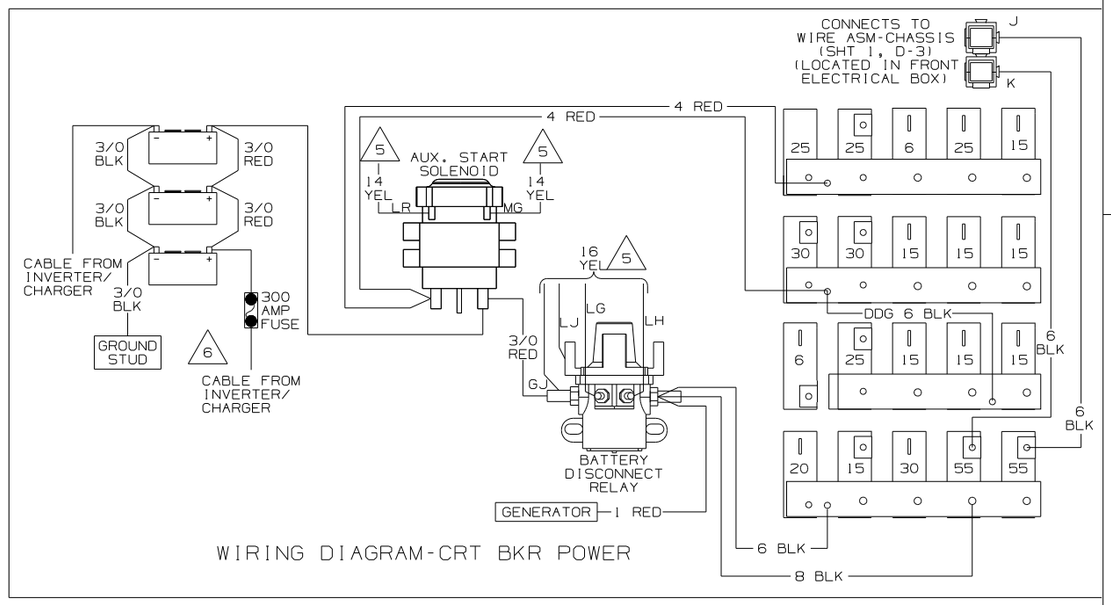

WIRING DIAGRAM-CRT BKR POWER

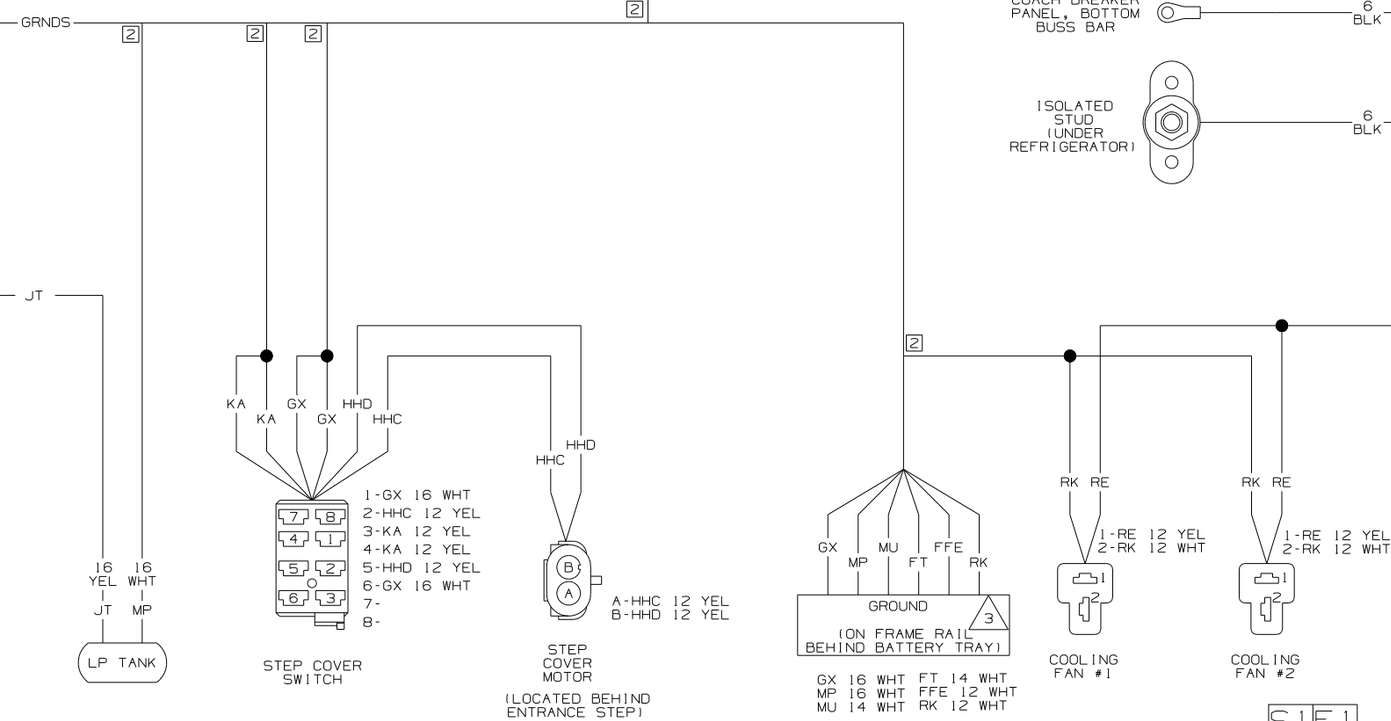

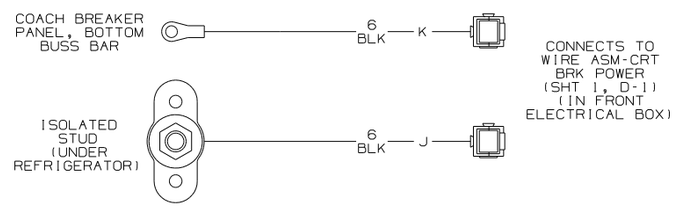

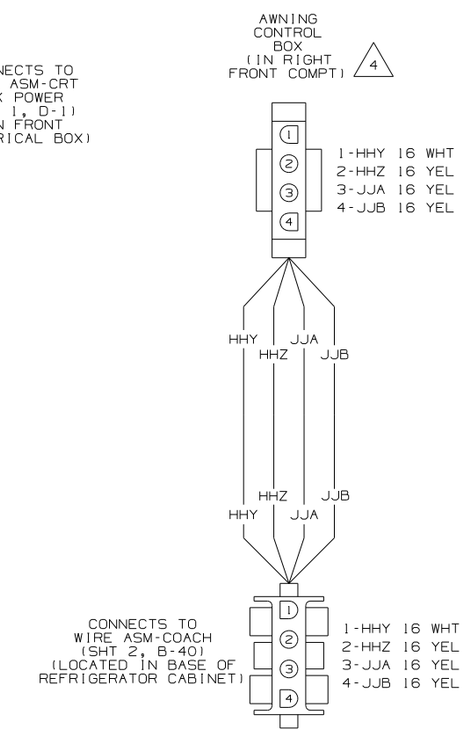

WIRING DIAGRAM-CHASSIS
(WIRE ASM 145455 REV F)

WINNEBAGO®

DFTR	ORIG. DATE
CHKR	ALL DIMENSIONS ARE IN MILLIMETERS
P.E.	
M.E.	FIRST USED 04 P34H
DSNR	
UNSPECIFIED TOLERANCES ARE: WHOLE DIM (X) : ONE-PLACE (X.X) : TWO-PLACE (X.XX) : ANGLE :	MATERIAL:
THIRD ANGLE PROJECTION	

DO NOT SCALE DRAWING

TITLE: WIRING DIAGRAM-BODY, 12V

SHEET 1 OF 9 | PART NO 144816

S1F1

REF: 142769 1

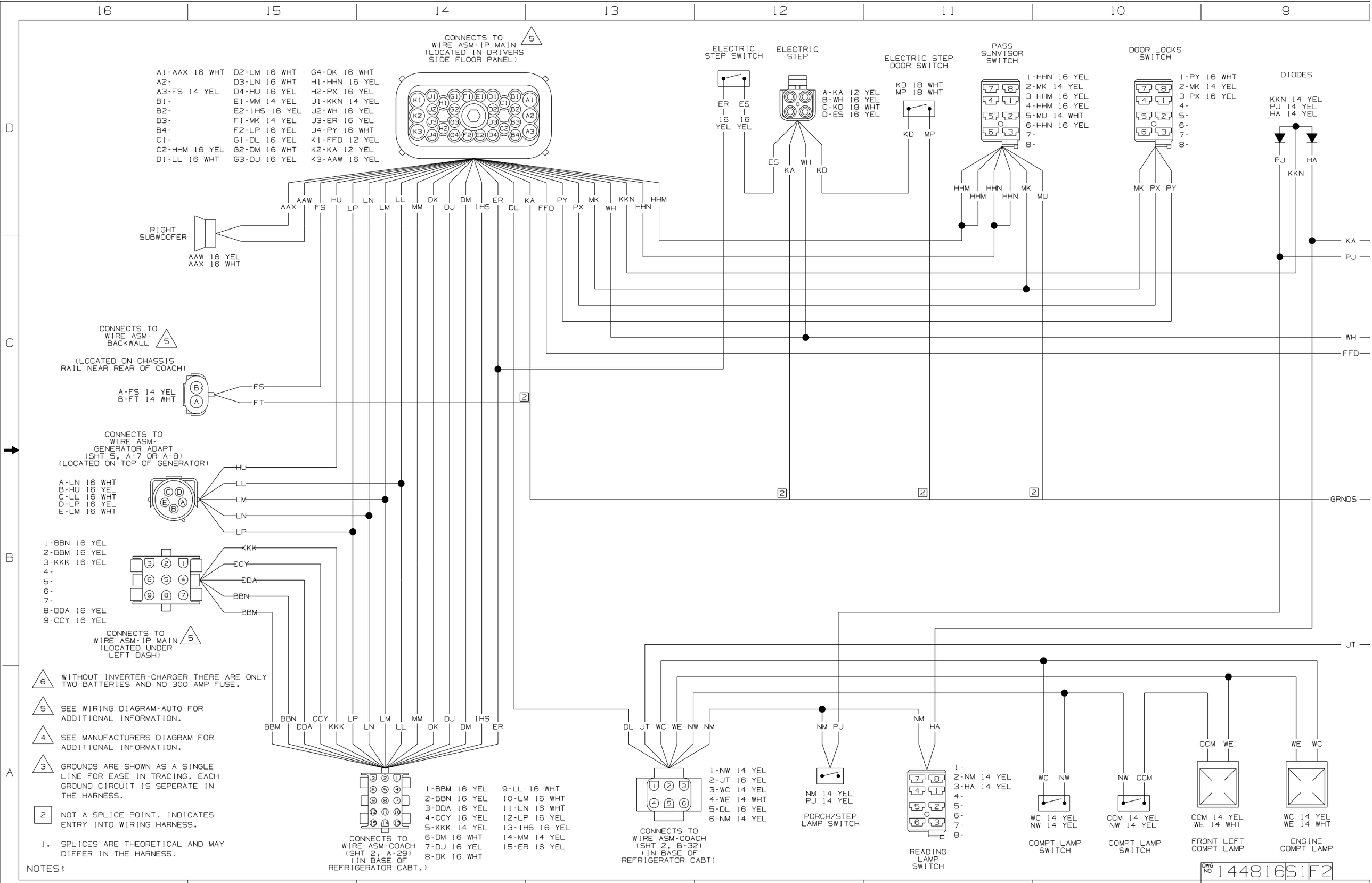
CONNECTS TO WIRE ASM-IP MAIN (LOCATED IN DRIVERS SIDE FLOOR PANEL)
A1-AAX 16 WHT
A2-
A3-FS 14 YEL
B1-
B2-
B3-
B4-
C1-
C2-HHM 16 YEL
D1-LL 16 WHT
D2-LM 16 WHT
D3-LN 16 WHT
D4-HU 16 YEL
E1-MM 14 YEL
E2-IHS 16 YEL
F1-MK 14 YEL
F2-LP 16 YEL
G1-DL 16 YEL
G2-DM 16 WHT
G3-DJ 16 YEL
G4-DK 16 WHT
H1-HHN 16 YEL
H2-PX 16 YEL
J1-KKN 14 YEL
J2-WH 16 YEL
J3-ER 16 YEL
J4-PY 16 WHT
K1-FFD 12 YEL
K2-KA 12 YEL
K3-AAW 16 YEL
ELECTRIC STEP SWITCH
ER 16 YEL
ES 16 YEL
ELECTRIC STEP
A-KA 12 YEL
B-WH 16 YEL
C-KD 18 WHT
D-ES 16 YEL
ELECTRIC STEP DOOR SWITCH
KD 18 WHT
MP 18 WHT
PASS SUNVISOR SWITCH
1-HHN 16 YEL
2-MK 14 YEL
3-HHM 16 YEL
4-HHM 16 YEL
5-MU 14 WHT
6-HHN 16 YEL
DOOR LOCKS SWITCH
1-PY 16 WHT
2-MK 14 YEL
3-PX 16 YEL
DIODES
KKN 14 YEL
PJ 14 YEL
HA 14 YEL
RIGHT SUBWOOFER
AAW 16 YEL
AAX 16 WHT
CONNECTS TO WIRE ASM-BACKWALL
(LOCATED ON CHASSIS RAIL NEAR REAR OF COACH)
A-FS 14 YEL
B-FT 14 WHT
CONNECTS TO WIRE ASM-GENERATOR ADAPT (SHT 5, A-7 OR A-8) (LOCATED ON TOP OF GENERATOR)
A-LN 16 WHT
B-HU 16 YEL
C-LL 16 WHT
D-LP 16 YEL
E-LM 16 WHT
1-BBN 16 YEL
2-BBM 16 YEL
3-KKK 16 YEL
8-DDA 16 YEL
9-CCY 16 YEL
CONNECTS TO WIRE ASM-IP MAIN (LOCATED UNDER LEFT DASH)
WITHOUT INVERTER-CHARGER THERE ARE ONLY TWO BATTERIES AND NO 300 AMP FUSE.
SEE WIRING DIAGRAM-AUTO FOR ADDITIONAL INFORMATION.
SEE MANUFACTURERS DIAGRAM FOR ADDITIONAL INFORMATION.
GROUNDS ARE SHOWN AS A SINGLE LINE FOR EASE IN TRACING. EACH GROUND CIRCUIT IS SEPERATE IN THE HARNESS.
NOT A SPLICE POINT. INDICATES ENTRY INTO WIRING HARNESS.
1. SPLICES ARE THEORETICAL AND MAY DIFFER IN THE HARNESS.
NOTES:
1-BBN 16 YEL
2-BBN 16 YEL
3-DDA 16 YEL
4-CCY 16 YEL
5-KKK 14 YEL
6-DM 16 WHT
7-DJ 16 YEL
8-DK 16 WHT
9-LL 16 WHT
10-LM 16 WHT
11-LN 16 WHT
12-LP 16 YEL
13-IHS 16 YEL
14-MM 14 YEL
15-ER 16 YEL
CONNECTS TO WIRE ASM-COACH (SHT 2, A-29) (IN BASE OF REFRIGERATOR CABT.)
1-NW 14 YEL
2-JT 16 YEL
3-WC 14 YEL
4-WE 14 WHT
5-DL 16 YEL
6-NM 14 YEL
CONNECTS TO WIRE ASM-COACH (SHT 2, B-32) (IN BASE OF REFRIGERATOR CABT)
NM 14 YEL
PJ 14 YEL
PORCH/STEP LAMP SWITCH
2-NM 14 YEL
3-HA 14 YEL
READING LAMP SWITCH
WC 14 YEL
NW 14 YEL
COMPT LAMP SWITCH
CCM 14 YEL
NW 14 YEL
COMPT LAMP SWITCH
CCM 14 YEL
WE 14 WHT
FRONT LEFT COMPT LAMP
WC 14 YEL
WE 14 WHT
ENGINE COMPT LAMP
GRNDS
JT
WH
FFD
KA
PJ
DWG NO 144816S1F2

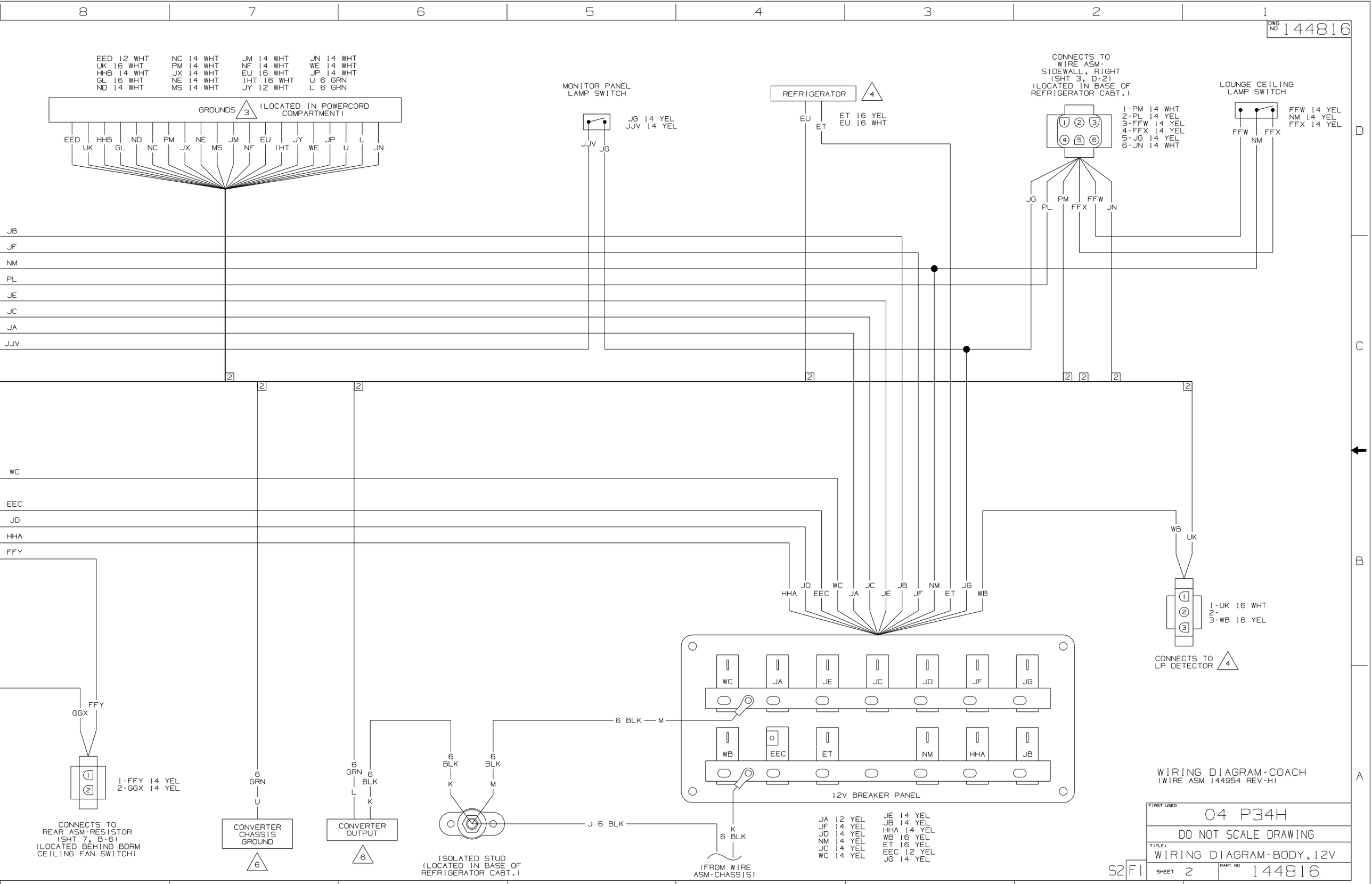
DWG NO 144816
EED 12 WHT
UK 16 WHT
HHB 14 WHT
GL 16 WHT
ND 14 WHT
NC 14 WHT
PM 14 WHT
JX 14 WHT
NE 14 WHT
MS 14 WHT
JM 14 WHT
NF 14 WHT
EU 16 WHT
IHT 16 WHT
JY 12 WHT
JN 14 WHT
WE 14 WHT
JP 14 WHT
U 6 GRN
L 6 GRN
GROUNDS 3 (LOCATED IN POWERCORD COMPARTMENT)
EED UK HHB GL ND NC PM JX NE MS JM NF EU IHT JY WE JP U L JN
MONITOR PANEL LAMP SWITCH
JJV JG
JG 14 YEL
JJV 14 YEL
REFRIGERATOR 4
EU ET
ET 16 YEL
EU 16 WHT
CONNECTS TO WIRE ASM-SIDEWALL, RIGHT (SHT 3, D-2) (LOCATED IN BASE OF REFRIGERATOR CABT.)
1-PM 14 WHT
2-PL 14 YEL
3-FFW 14 YEL
4-FFX 14 YEL
5-JG 14 YEL
6-JN 14 WHT
JG PL PM FFX FFW JN
LOUNGE CEILING LAMP SWITCH
FFW NM FFX
FFW 14 YEL
NM 14 YEL
FFX 14 YEL
JB
JF
NM
PL
JE
JC
JA
JJV
WC
EEC
JD
HHA
FFY
HHA JD EEC WC JA JC JE JB JF NM ET JG WB
WB UK
1-UK 16 WHT
2-
3-WB 16 YEL
CONNECTS TO LP DETECTOR 4
WC JA JE JC JD JF JG
WB EEC ET NM HHA JB
12V BREAKER PANEL
6 BLK M
FFY GGX
1-FFY 14 YEL
2-GGX 14 YEL
CONNECTS TO REAR ASM-RESISTOR (SHT 7, B-6) (LOCATED BEHIND BDRM CEILING FAN SWITCH)
6 GRN U
CONVERTER CHASSIS GROUND
6
6 GRN L
6 BLK K
CONVERTER OUTPUT
6
6 BLK K
6 BLK M
ISOLATED STUD (LOCATED IN BASE OF REFRIGERATOR CABT.)
J 6 BLK
K 6 BLK
(FROM WIRE ASM-CHASSIS)
JA 12 YEL
JF 14 YEL
JD 14 YEL
NM 14 YEL
JC 14 YEL
WC 14 YEL
JE 14 YEL
JB 14 YEL
HHA 14 YEL
WB 16 YEL
ET 16 YEL
EEC 12 YEL
JG 14 YEL
WIRING DIAGRAM-COACH
(WIRE ASM 144954 REV-H)
FIRST USED
04 P34H
DO NOT SCALE DRAWING
TITLE:
WIRING DIAGRAM-BODY, 12V
S2 F1
SHEET 2
PART NO 144816

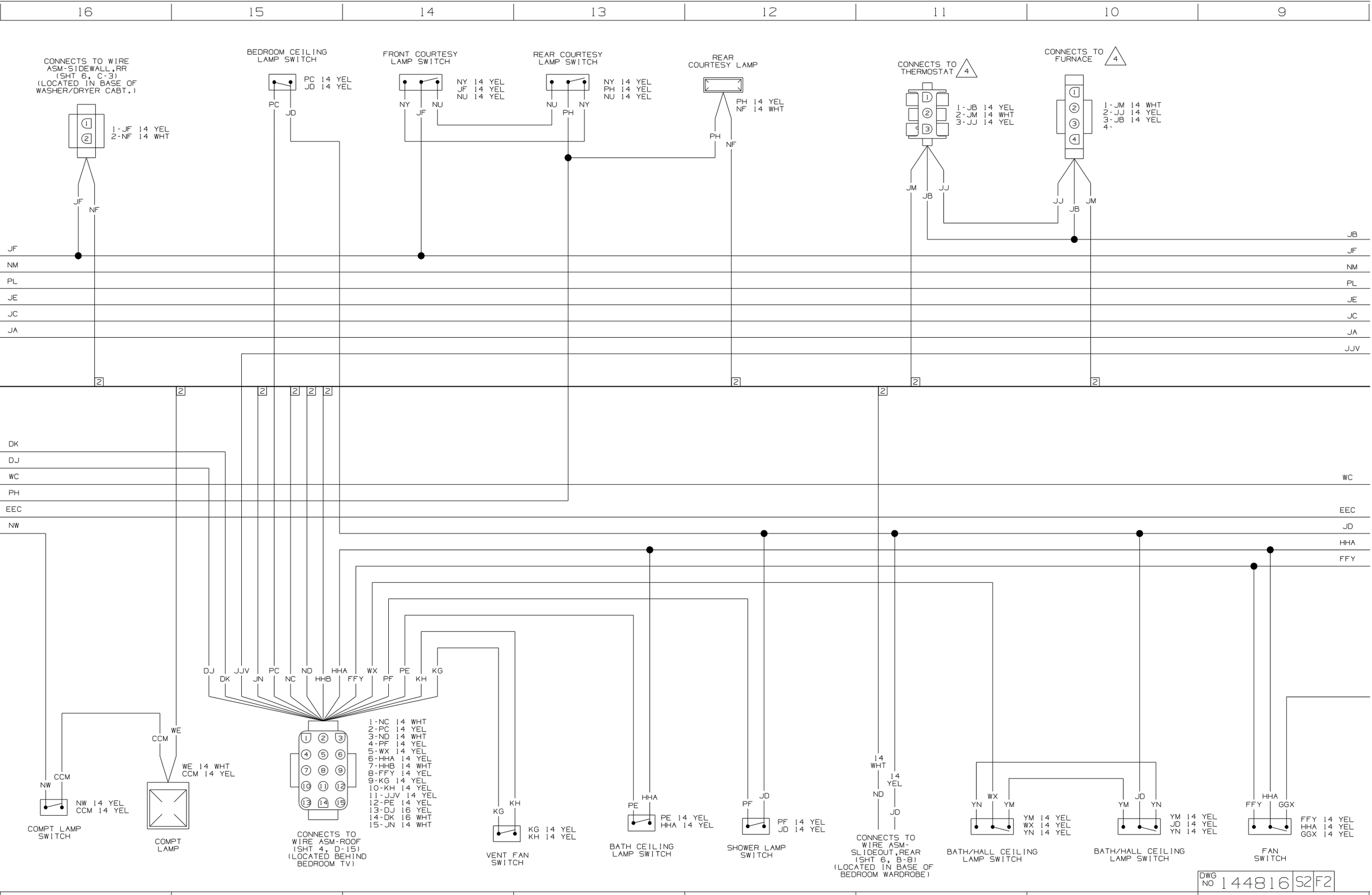
16
15
14
13
12
11
10
9
CONNECTS TO WIRE ASM-SIDEWALL,RR (SHT 6, C-3) (LOCATED IN BASE OF WASHER/DRYER CABT.)
1-JF 14 YEL
2-NF 14 WHT
BEDROOM CEILING LAMP SWITCH
PC 14 YEL
JD 14 YEL
FRONT COURTESY LAMP SWITCH
NY 14 YEL
JF 14 YEL
NU 14 YEL
REAR COURTESY LAMP SWITCH
NY 14 YEL
PH 14 YEL
NU 14 YEL
REAR COURTESY LAMP
PH 14 YEL
NF 14 WHT
CONNECTS TO THERMOSTAT 4
1-JB 14 YEL
2-JM 14 WHT
3-JJ 14 YEL
CONNECTS TO FURNACE 4
1-JM 14 WHT
2-JJ 14 YEL
3-JB 14 YEL
4-
JF
NM
PL
JE
JC
JA
JJV
DK
DJ
WC
PH
EEC
NW
JD
HHA
FFY
DJ DK JJV JN PC NC ND HHB HHA FFY WX PF PE KH KG
1-NC 14 WHT
2-PC 14 YEL
3-ND 14 WHT
4-PF 14 YEL
5-WX 14 YEL
6-HHA 14 YEL
7-HHB 14 WHT
8-FFY 14 YEL
9-KG 14 YEL
10-KH 14 YEL
11-JJV 14 YEL
12-PE 14 YEL
13-DJ 16 YEL
14-DK 16 WHT
15-JN 14 WHT
CONNECTS TO WIRE ASM-ROOF (SHT 4, D-15) (LOCATED BEHIND BEDROOM TV)
NW 14 YEL
CCM 14 YEL
COMPT LAMP SWITCH
WE 14 WHT
CCM 14 YEL
COMPT LAMP
KG 14 YEL
KH 14 YEL
VENT FAN SWITCH
PE 14 YEL
HHA 14 YEL
BATH CEILING LAMP SWITCH
PF 14 YEL
JD 14 YEL
SHOWER LAMP SWITCH
14 WHT
14 YEL
CONNECTS TO WIRE ASM-SLIDEOUT,REAR (SHT 6, B-8) (LOCATED IN BASE OF BEDROOM WARDROBE)
YM 14 YEL
WX 14 YEL
YN 14 YEL
BATH/HALL CEILING LAMP SWITCH
YM 14 YEL
JD 14 YEL
YN 14 YEL
BATH/HALL CEILING LAMP SWITCH
FFY 14 YEL
HHA 14 YEL
GGX 14 YEL
FAN SWITCH
DWG NO 144816 S2 F2

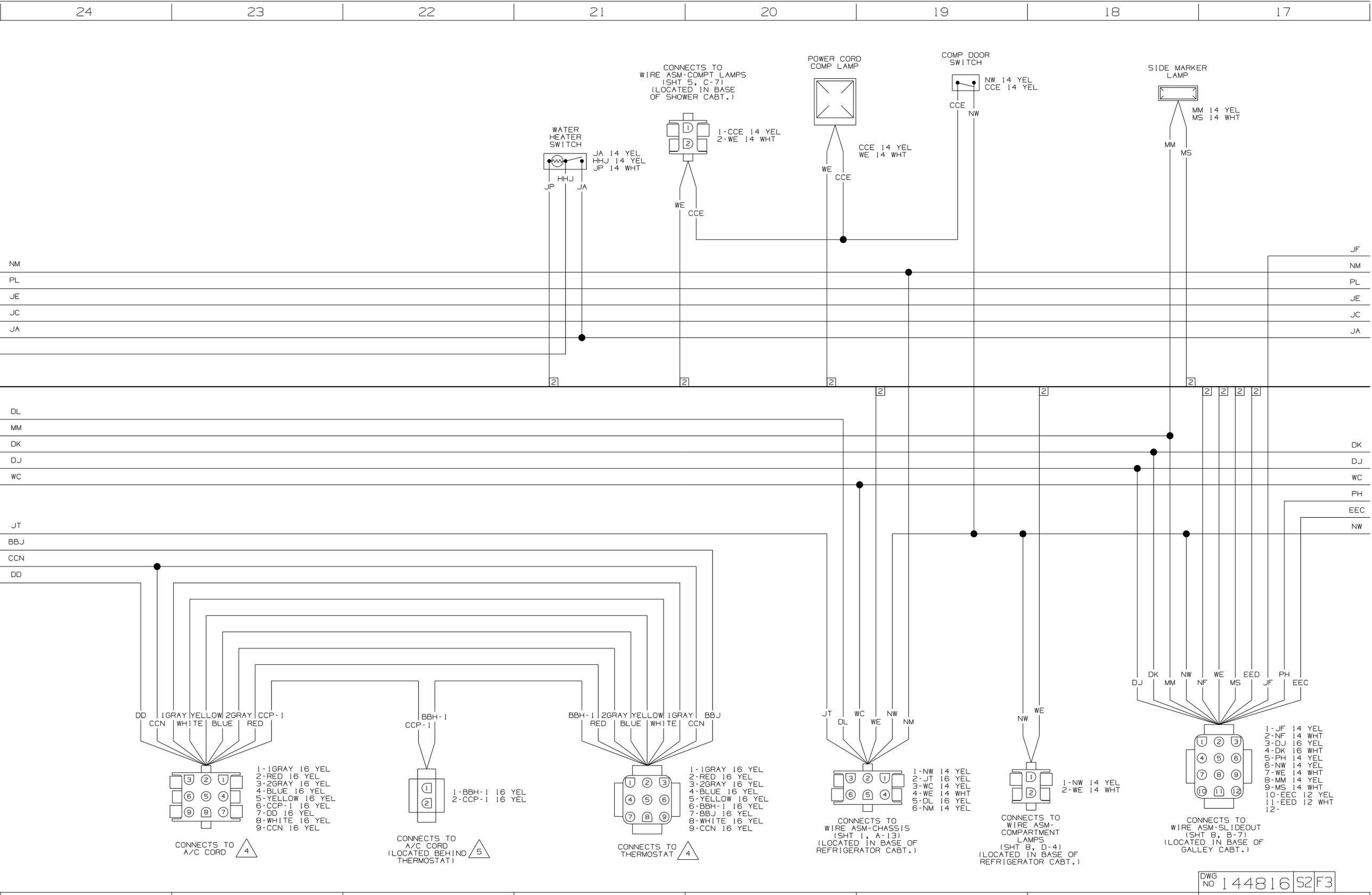
24
23
22
21
20
19
18
17
CONNECTS TO
WIRE ASM-COMPT LAMPS
(SHT 5, C-7)
(LOCATED IN BASE
OF SHOWER CABT.)
POWER CORD
COMP LAMP
COMP DOOR
SWITCH
SIDE MARKER
LAMP
NW 14 YEL
CCE 14 YEL
CCE
NW
MM 14 YEL
MS 14 WHT
MM
MS
WATER
HEATER
SWITCH
JA 14 YEL
HHJ 14 YEL
JP 14 WHT
HHJ
JP
JA
1-CCE 14 YEL
2-WE 14 WHT
WE
CCE
CCE 14 YEL
WE 14 WHT
WE
CCE
JF
NM
PL
JE
JC
JA
DL
MM
DK
DJ
WC
PH
EEC
NW
JT
BBJ
CCN
DD
DD
CCN
1GRAY
WHITE
YELLOW
BLUE
2GRAY
RED
CCP-1
1-1GRAY 16 YEL
2-RED 16 YEL
3-2GRAY 16 YEL
4-BLUE 16 YEL
5-YELLOW 16 YEL
6-CCP-1 16 YEL
7-DD 16 YEL
8-WHITE 16 YEL
9-CCN 16 YEL
CONNECTS TO
A/C CORD
4
BBH-1
CCP-1
1-BBH-1 16 YEL
2-CCP-1 16 YEL
CONNECTS TO
A/C CORD
(LOCATED BEHIND
THERMOSTAT)
5
BBH-1
RED
2GRAY
BLUE
YELLOW
WHITE
1GRAY
CCN
BBJ
1-1GRAY 16 YEL
2-RED 16 YEL
3-2GRAY 16 YEL
4-BLUE 16 YEL
5-YELLOW 16 YEL
6-BBH-1 16 YEL
7-BBJ 16 YEL
8-WHITE 16 YEL
9-CCN 16 YEL
CONNECTS TO
THERMOSTAT
4
JT
DL
WC
WE
NW
NM
1-NW 14 YEL
2-JT 16 YEL
3-WC 14 YEL
4-WE 14 WHT
5-DL 16 YEL
6-NM 14 YEL
CONNECTS TO
WIRE ASM-CHASSIS
(SHT 1, A-13)
(LOCATED IN BASE OF
REFRIGERATOR CABT.)
NW
WE
1-NW 14 YEL
2-WE 14 WHT
CONNECTS TO
WIRE ASM-
COMPARTMENT
LAMPS
(SHT 8, D-4)
(LOCATED IN BASE OF
REFRIGERATOR CABT.)
DJ
DK
MM
NW
NF
WE
MS
EED
JF
PH
EEC
1-JF 14 YEL
2-NF 14 WHT
3-DJ 16 YEL
4-DK 16 WHT
5-PH 14 YEL
6-NW 14 YEL
7-WE 14 WHT
8-MM 14 YEL
9-MS 14 WHT
10-EEC 12 YEL
11-EED 12 WHT
12-
CONNECTS TO
WIRE ASM-SLIDEOUT
(SHT 8, B-7)
(LOCATED IN BASE OF
GALLEY CABT.)
DWG NO 144816 S2 F3
24
23
22
21
20
19
18
17

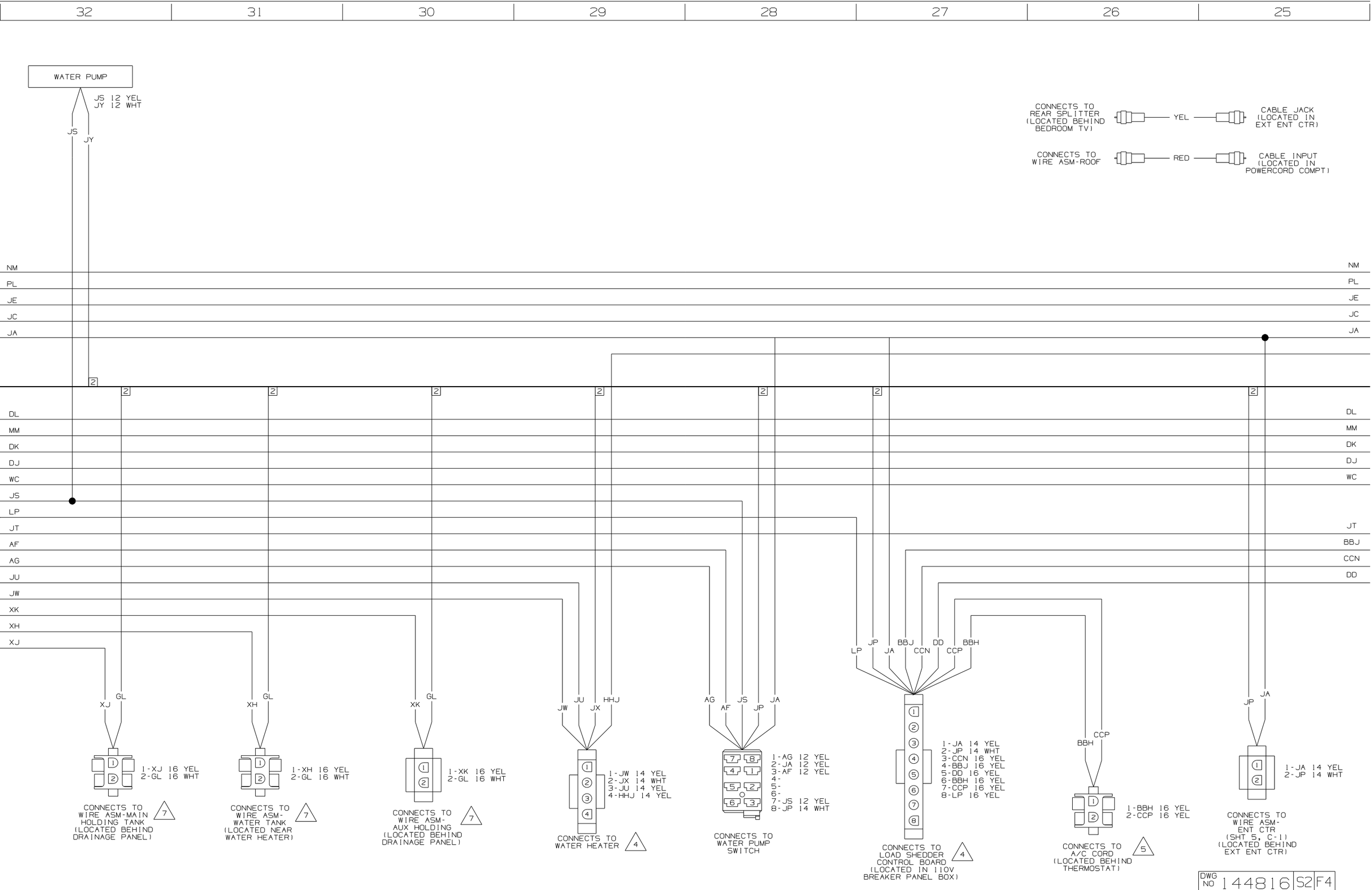
32
31
30
29
28
27
26
25
WATER PUMP
JS 12 YEL
JY 12 WHT
JS
JY
CONNECTS TO REAR SPLITTER (LOCATED BEHIND BEDROOM TV)
YEL
CABLE JACK (LOCATED IN EXT ENT CTR)
CONNECTS TO WIRE ASM-ROOF
RED
CABLE INPUT (LOCATED IN POWERCORD COMPT)
NM
PL
JE
JC
JA
DL
MM
DK
DJ
WC
JS
LP
JT
AF
AG
JU
JW
XK
XH
XJ
BBJ
CCN
DD
XJ
GL
1-XJ 16 YEL
2-GL 16 WHT
CONNECTS TO WIRE ASM-MAIN HOLDING TANK (LOCATED BEHIND DRAINAGE PANEL)
7
XH
GL
1-XH 16 YEL
2-GL 16 WHT
CONNECTS TO WIRE ASM-WATER TANK (LOCATED NEAR WATER HEATER)
7
XK
GL
1-XK 16 YEL
2-GL 16 WHT
CONNECTS TO WIRE ASM-AUX HOLDING (LOCATED BEHIND DRAINAGE PANEL)
7
JW
JU
JX
HHJ
1-JW 14 YEL
2-JX 14 WHT
3-JU 14 YEL
4-HHJ 14 YEL
CONNECTS TO WATER HEATER
4
AG
AF
JS
JP
JA
1-AG 12 YEL
2-JA 12 YEL
3-AF 12 YEL
4-
5-
6-
7-JS 12 YEL
8-JP 14 WHT
CONNECTS TO WATER PUMP SWITCH
LP
JP
JA
BBJ
CCN
DD
CCP
BBH
1-JA 14 YEL
2-JP 14 WHT
3-CCN 16 YEL
4-BBJ 16 YEL
5-DD 16 YEL
6-BBH 16 YEL
7-CCP 16 YEL
8-LP 16 YEL
CONNECTS TO LOAD SHEDDER CONTROL BOARD (LOCATED IN 110V BREAKER PANEL BOX)
4
BBH
CCP
1-BBH 16 YEL
2-CCP 16 YEL
CONNECTS TO A/C CORD (LOCATED BEHIND THERMOSTAT)
5
JP
JA
1-JA 14 YEL
2-JP 14 WHT
CONNECTS TO WIRE ASM-ENT CTR (SHT 5, C-1) (LOCATED BEHIND EXT ENT CTR)
DWG NO 144816 S2 F4

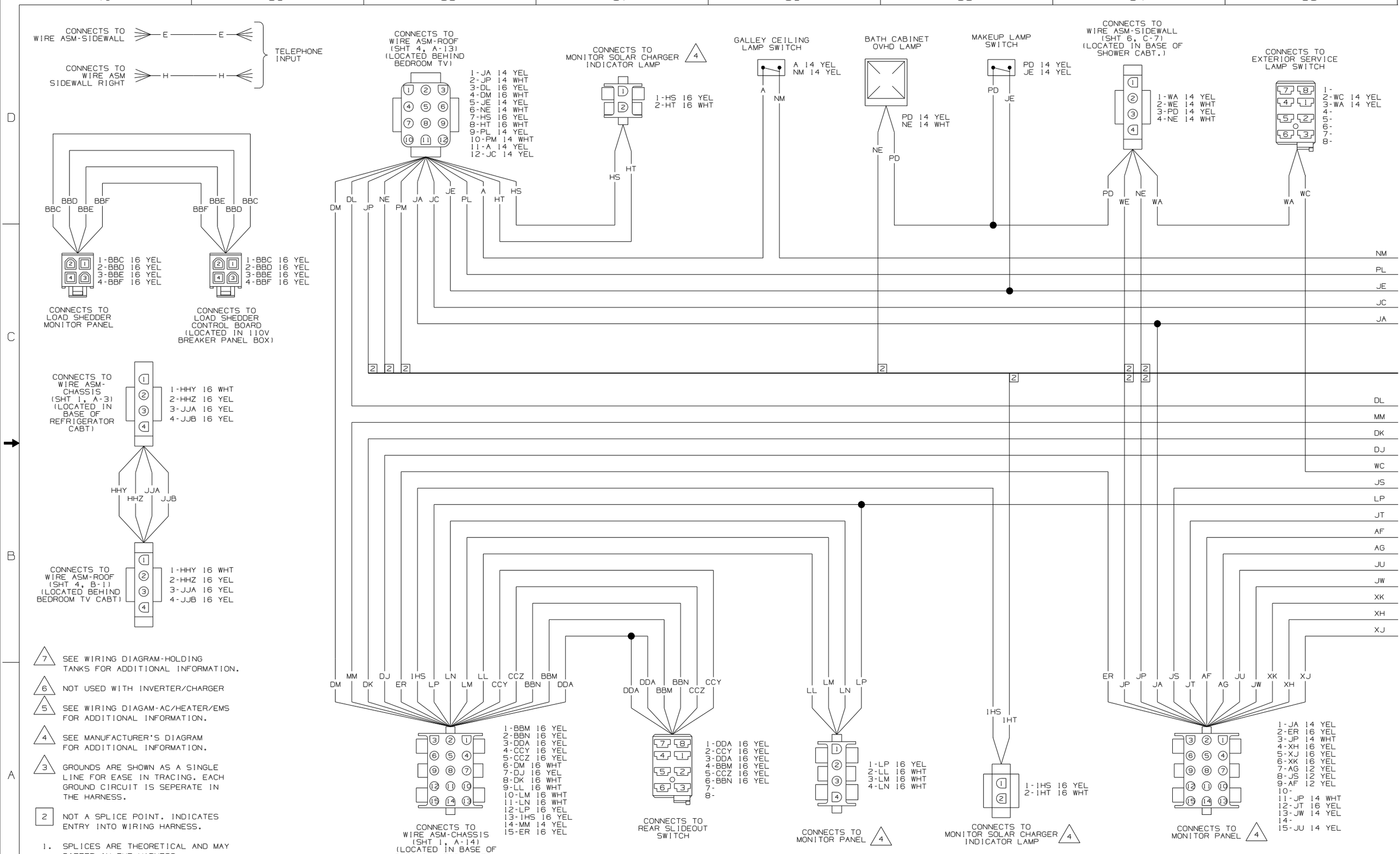
CONNECTS TO WIRE ASM-SIDEWALL
E
E
CONNECTS TO WIRE ASM SIDEWALL RIGHT
H
H
TELEPHONE INPUT
CONNECTS TO WIRE ASM-ROOF (SHT 4, A-13) (LOCATED BEHIND BEDROOM TV)
1-JA 14 YEL
2-JP 14 WHT
3-DL 16 YEL
4-DM 16 WHT
5-JE 14 YEL
6-NE 14 WHT
7-HS 16 YEL
8-HT 16 WHT
9-PL 14 YEL
10-PM 14 WHT
11-A 14 YEL
12-JC 14 YEL
CONNECTS TO MONITOR SOLAR CHARGER INDICATOR LAMP
4
1-HS 16 YEL
2-HT 16 WHT
GALLEY CEILING LAMP SWITCH
A 14 YEL
NM 14 YEL
BATH CABINET OVHD LAMP
PD 14 YEL
NE 14 WHT
MAKEUP LAMP SWITCH
PD 14 YEL
JE 14 YEL
CONNECTS TO WIRE ASM-SIDEWALL (SHT 6, C-7) (LOCATED IN BASE OF SHOWER CABT.)
1-WA 14 YEL
2-WE 14 WHT
3-PD 14 YEL
4-NE 14 WHT
CONNECTS TO EXTERIOR SERVICE LAMP SWITCH
1-
2-WC 14 YEL
3-WA 14 YEL
4-
5-
6-
7-
8-
BBD BBF BBC BBE
BBF BBE BBD BBC
1-BBC 16 YEL
2-BBD 16 YEL
3-BBE 16 YEL
4-BBF 16 YEL
CONNECTS TO LOAD SHEDDER MONITOR PANEL
CONNECTS TO LOAD SHEDDER CONTROL BOARD (LOCATED IN 110V BREAKER PANEL BOX)
CONNECTS TO WIRE ASM-CHASSIS (SHT 1, A-3) (LOCATED IN BASE OF REFRIGERATOR CABT)
1-HHY 16 WHT
2-HHZ 16 YEL
3-JJA 16 YEL
4-JJB 16 YEL
HHY HHZ JJA JJB
CONNECTS TO WIRE ASM-ROOF (SHT 4, B-1) (LOCATED BEHIND BEDROOM TV CABT)
1-HHY 16 WHT
2-HHZ 16 YEL
3-JJA 16 YEL
4-JJB 16 YEL
DM DL JP NE PM JA JC JE PL A HT HS
HS HT
NE PD
PD JE
PD WE NE WA
WA WC
NM
PL
JE
JC
JA
DL
MM
DK
DJ
WC
JS
LP
JT
AF
AG
JU
JW
XK
XH
XJ
DM MM DK DJ ER IHS LP LN LM LL CCY CCZ BBN BBM DDA
DDA BBM DDA BBN CCZ CCY
LL LM LN LP
IHS IHT
ER JP JA JS JT AF AG JU JW XK XH XJ
1-BBM 16 YEL
2-BBN 16 YEL
3-DDA 16 YEL
4-CCY 16 YEL
5-CCZ 16 YEL
6-DM 16 WHT
7-DJ 16 YEL
8-DK 16 WHT
9-LL 16 WHT
10-LM 16 WHT
11-LN 16 WHT
12-LP 16 YEL
13-IHS 16 YEL
14-MM 14 YEL
15-ER 16 YEL
CONNECTS TO WIRE ASM-CHASSIS (SHT 1, A-14) (LOCATED IN BASE OF REFRIGERATOR CABT.)
1-DDA 16 YEL
2-CCY 16 YEL
3-DDA 16 YEL
4-BBM 16 YEL
5-CCZ 16 YEL
6-BBN 16 YEL
7-
8-
CONNECTS TO REAR SLIDEOUT SWITCH
1-LP 16 YEL
2-LL 16 WHT
3-LM 16 WHT
4-LN 16 WHT
CONNECTS TO MONITOR PANEL
4
1-IHS 16 YEL
2-IHT 16 WHT
CONNECTS TO MONITOR SOLAR CHARGER INDICATOR LAMP
4
1-JA 14 YEL
2-ER 16 YEL
3-JP 14 WHT
4-XH 16 YEL
5-XJ 16 YEL
6-XK 16 YEL
7-AG 12 YEL
8-JS 12 YEL
9-AF 12 YEL
10-
11-JP 14 WHT
12-JT 16 YEL
13-JW 14 YEL
14-
15-JU 14 YEL
CONNECTS TO MONITOR PANEL
4
7 SEE WIRING DIAGRAM-HOLDING TANKS FOR ADDITIONAL INFORMATION.
6 NOT USED WITH INVERTER/CHARGER
5 SEE WIRING DIAGAM-AC/HEATER/EMS FOR ADDITIONAL INFORMATION.
4 SEE MANUFACTURER'S DIAGRAM FOR ADDITIONAL INFORMATION.
3 GROUNDS ARE SHOWN AS A SINGLE LINE FOR EASE IN TRACING. EACH GROUND CIRCUIT IS SEPERATE IN THE HARNESS.
2 NOT A SPLICE POINT. INDICATES ENTRY INTO WIRING HARNESS.
1. SPLICES ARE THEORETICAL AND MAY DIFFER IN THE HARNESS.
NOTES:
DWG NO 144816 S2 F5

DWG NO 144816

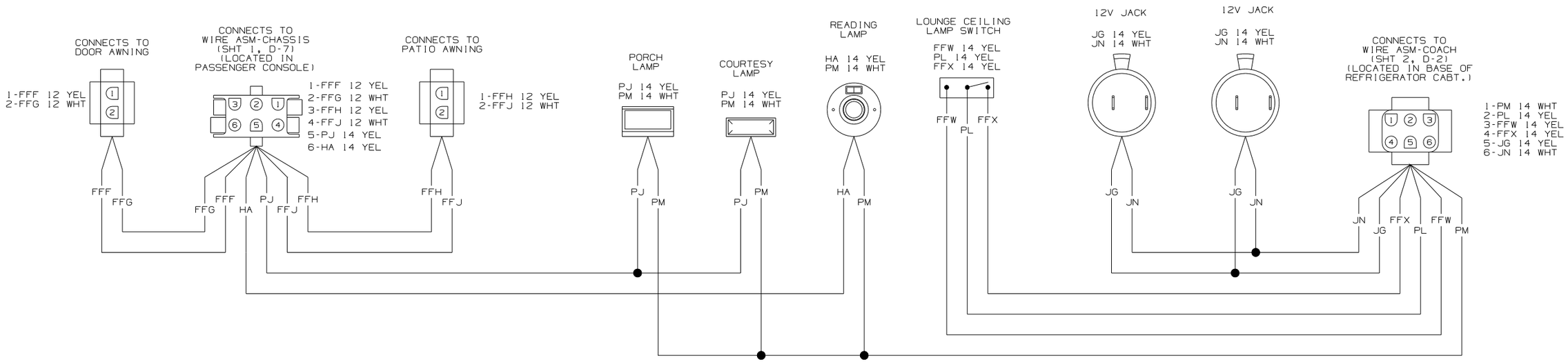

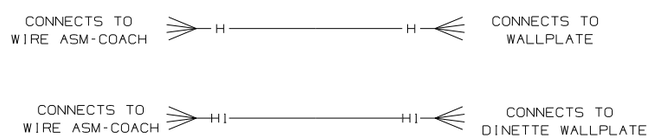

WIRING DIAGRAM-SIDEWALL,RIGHT
(WIRE ASM 144949 REV-D)

FIRST USED	04 P34H
DO NOT SCALE DRAWING	
TITLE: WIRING DIAGRAM-BODY,12V	
SHEET 3	PART NO 144816

DWG NO 144816

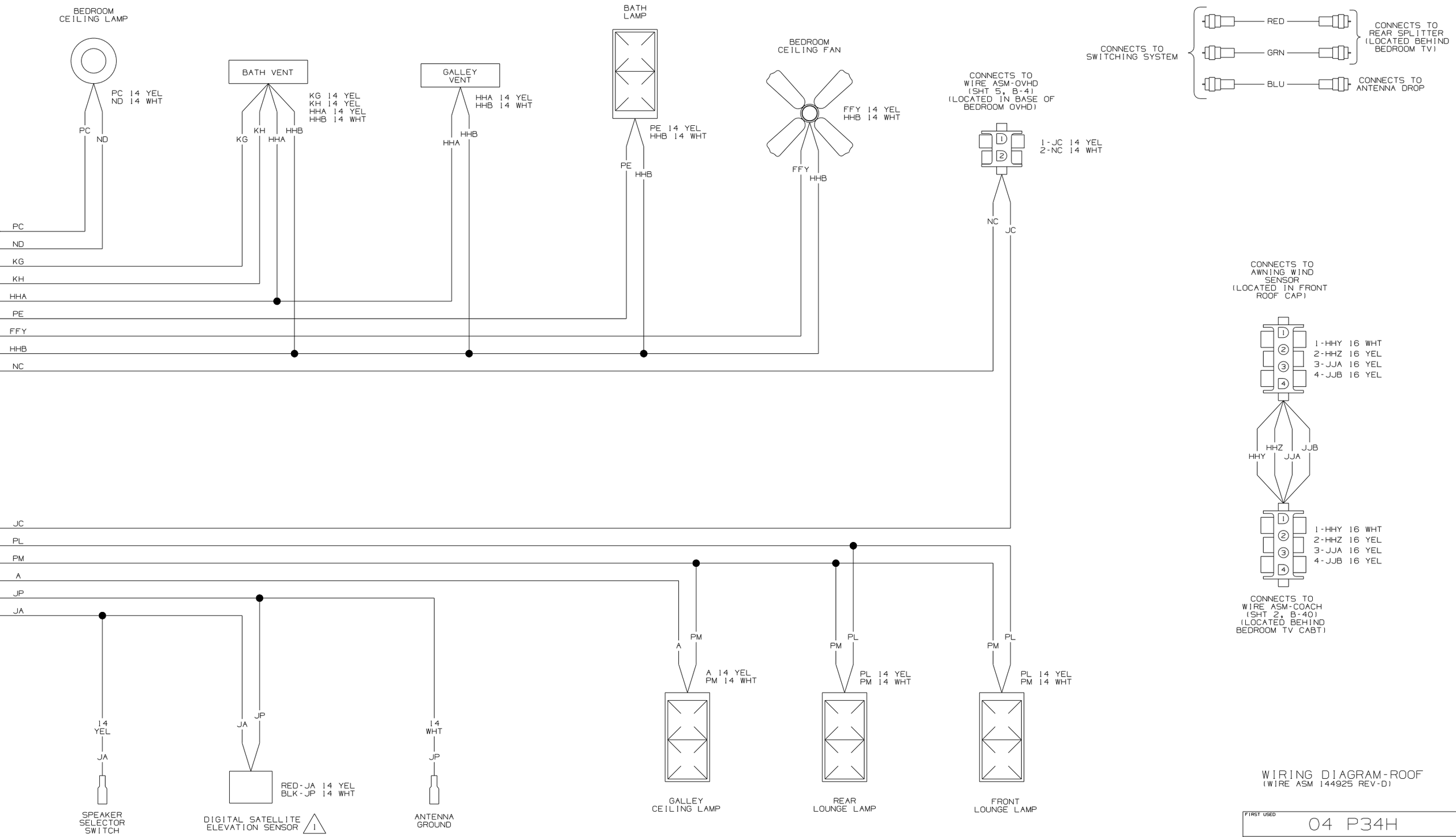

WIRING DIAGRAM-ROOF
(WIRE ASM 144925 REV-D)

FIRST USED	04 P34H
DO NOT SCALE DRAWING	
TITLE:	WIRING DIAGRAM-BODY, 12V
S4 F1 SHEET 4	PART NO 144816

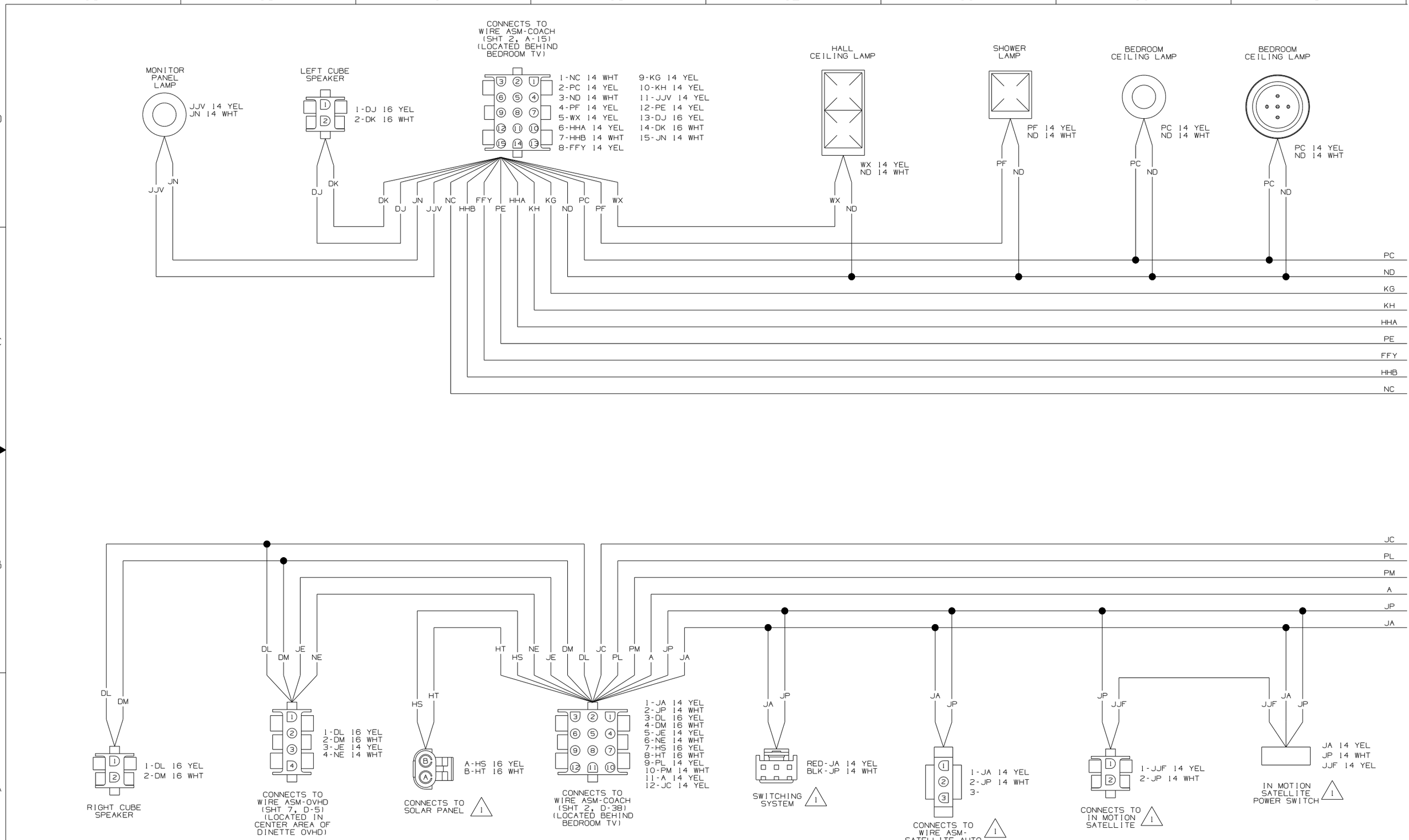

1 SEE MANUFACTURER'S DIAGRAM FOR ADDITIONAL INFORMATION.

NOTES:

DWG NO 144816 S4 F2

DWG NO 144816

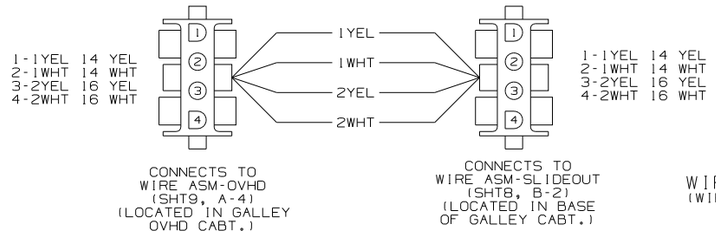

WIRING DIAGRAM-SIDEWALL
(WIRE ASM 129128-02 REV-C)

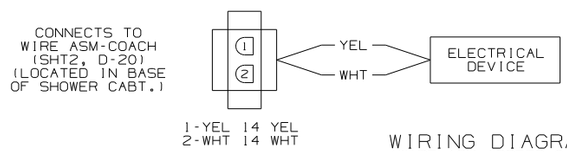

WIRING DIAGRAM-EXTENSION, 2 PIN
(WIRE ASM 133572-01-008 REV-E)

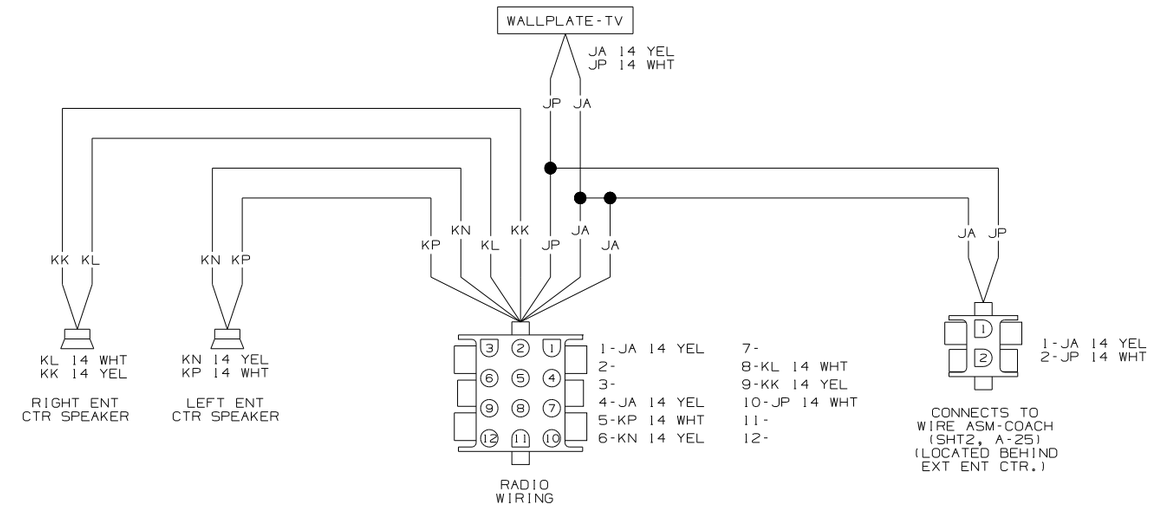

WIRING DIAGRAM-ENTERTAINMENT CENTER
(WIRE ASM 125853-04 REV-L)

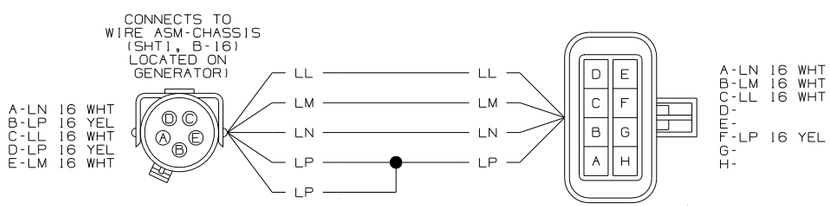

WIRING DIAGRAM-GEN ADAPTER,LP
(WIRE ASM 130332-01 REV-C)

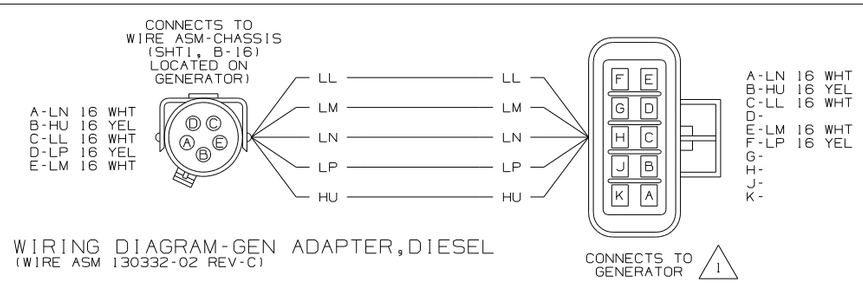

WIRING DIAGRAM-GEN ADAPTER,DIESEL
(WIRE ASM 130332-02 REV-C)

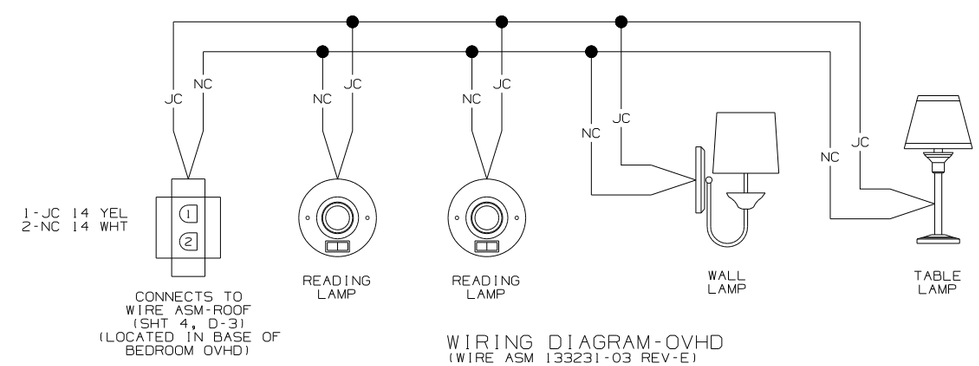

WIRING DIAGRAM-OVHD
(WIRE ASM 133231-03 REV-E)

1 SEE MANUFACTURER'S DIAGRAM FOR ADDITIONAL INFORMATION.

NOTES:

FIRST USED	04 P34H
DO NOT SCALE DRAWING	
TITLE: WIRING DIAGRAM-BODY,12V	
SHEET 5	PART NO 144816

DWG NO 144816

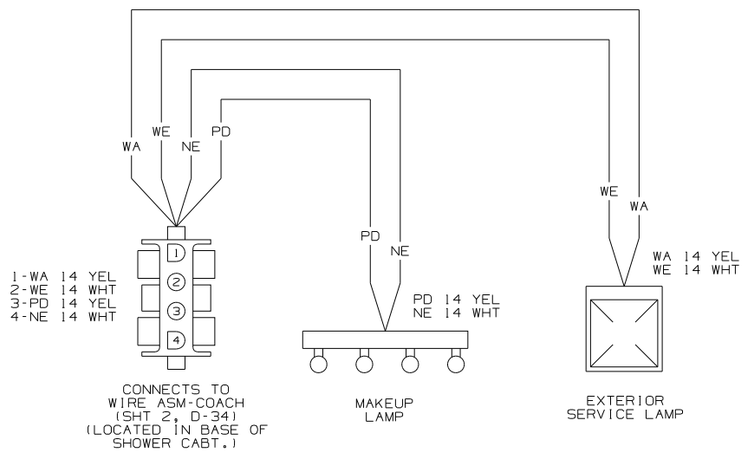

WIRING DIAGRAM-SIDEWALL
(WIRE ASM 140487 REV-A)

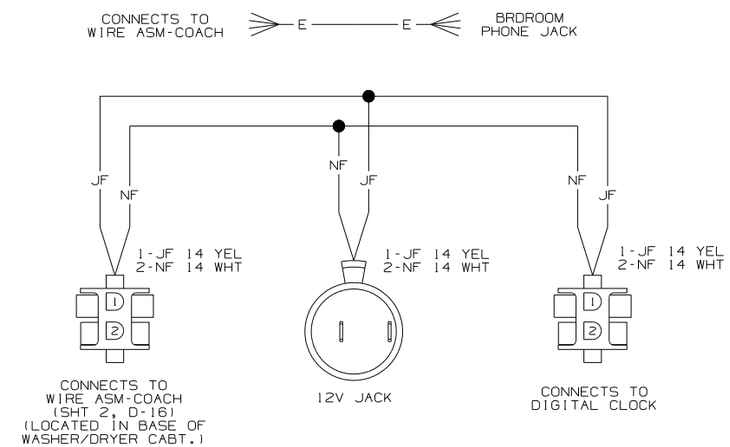

WIRING DIAGRAM-SIDEWALL,RR
(WIRE ASM 134061-03 REV-E)

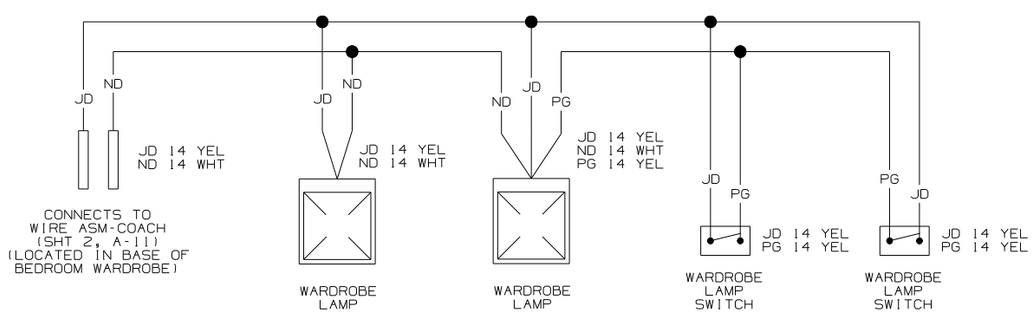

WIRING DIAGRAM-SLIDEOUT,REAR
(WIRE ASM 137456 REV-E)

FIRST USED	04 P34H
DO NOT SCALE DRAWING	
TITLE: WIRING DIAGRAM-BODY,12V	
SHEET 6	PART NO 144816

DWG NO 144816

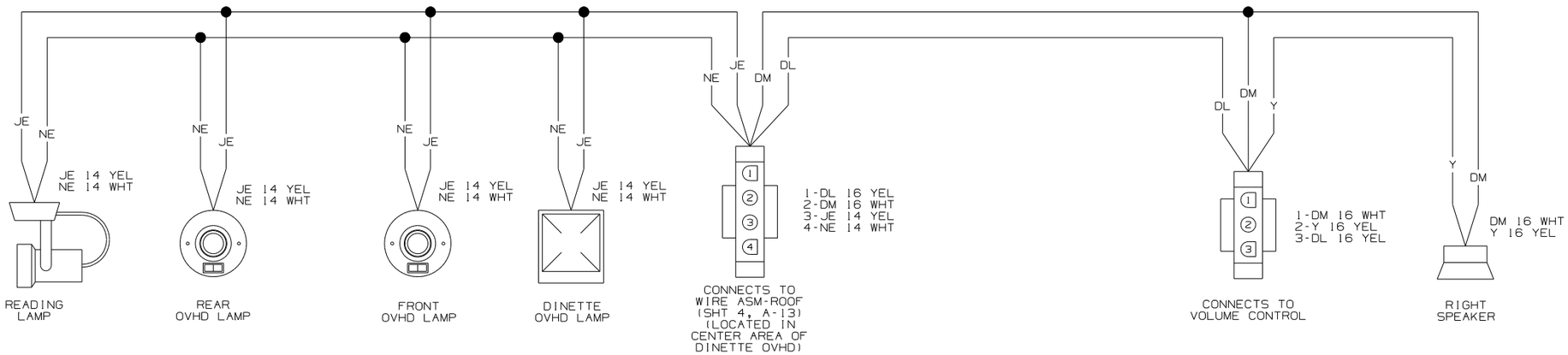

WIRING DIAGRAM-OVHD
(WIRE ASM 145000 REV-A)

WIRING DIAGRAM-RESISTOR, FAN
(WIRE ASM 140195 REV-A)

FIRST USED	04 P34H
DO NOT SCALE DRAWING	
TITLE: WIRING DIAGRAM-BOCY,12V	
SHEET 7	PART NO 144816

DWG NO 144816

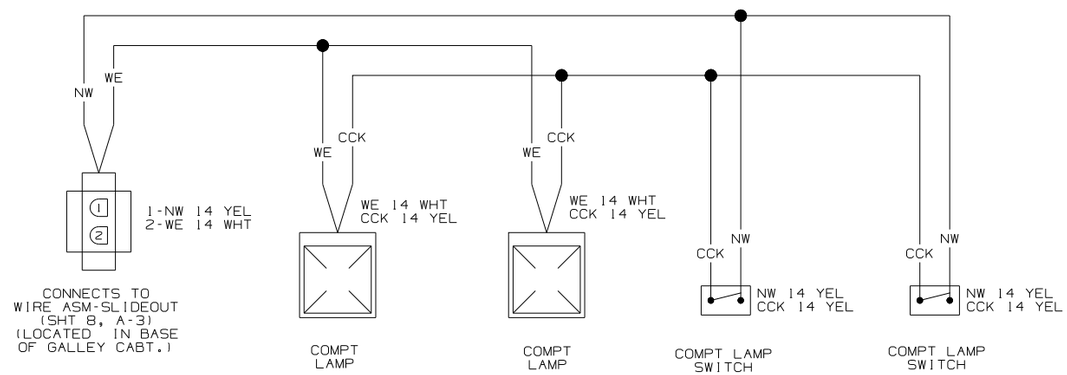

WIRING DIAGRAM-COMPT LAMPS
(WIRE ASM 138219 REV-E)

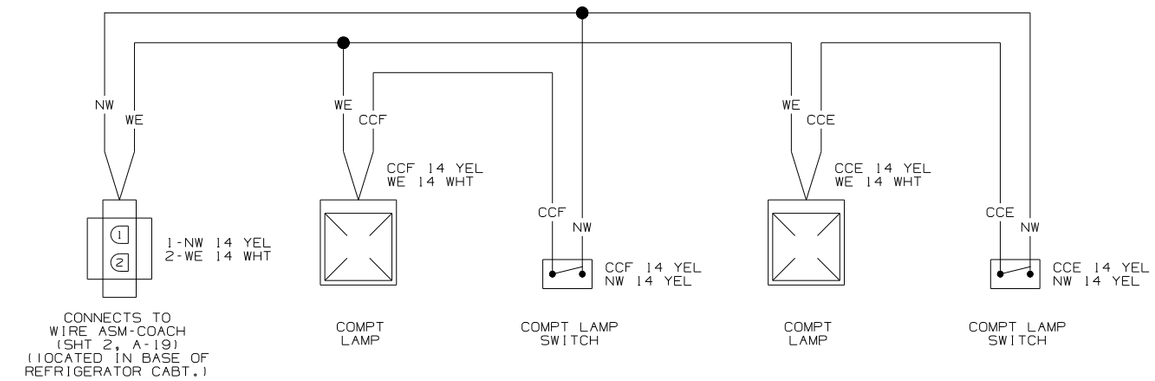

WIRING DIAGRAM-COMPT LAMPS
(WIRE ASM 140498 REV-B)

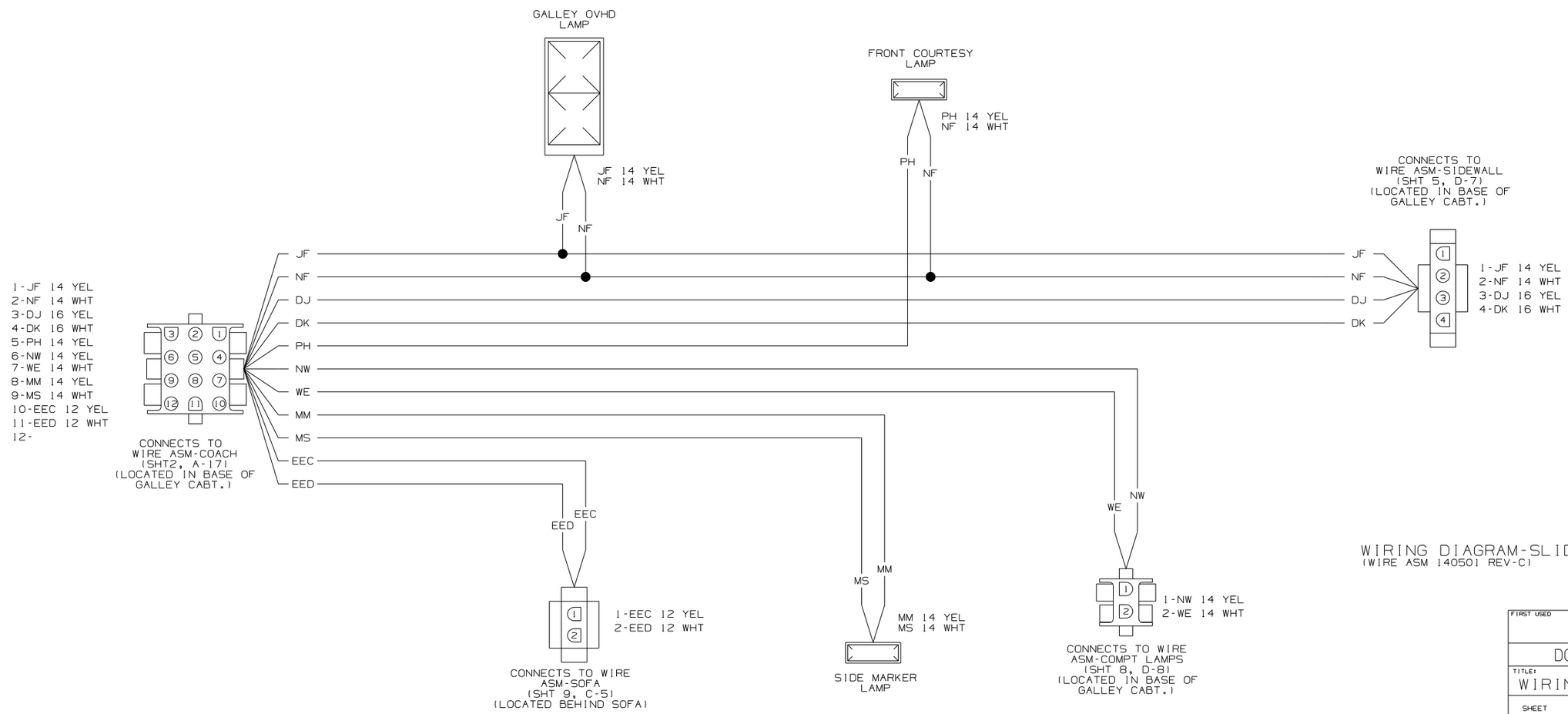

WIRING DIAGRAM-SLIDEOUT
(WIRE ASM 140501 REV-C)

FIRST USED	04 P34H
DO NOT SCALE DRAWING	
TITLE: WIRING DIAGRAM-BODY, 12 V	
SHEET 8	PART NO 144816

DWG NO 144816

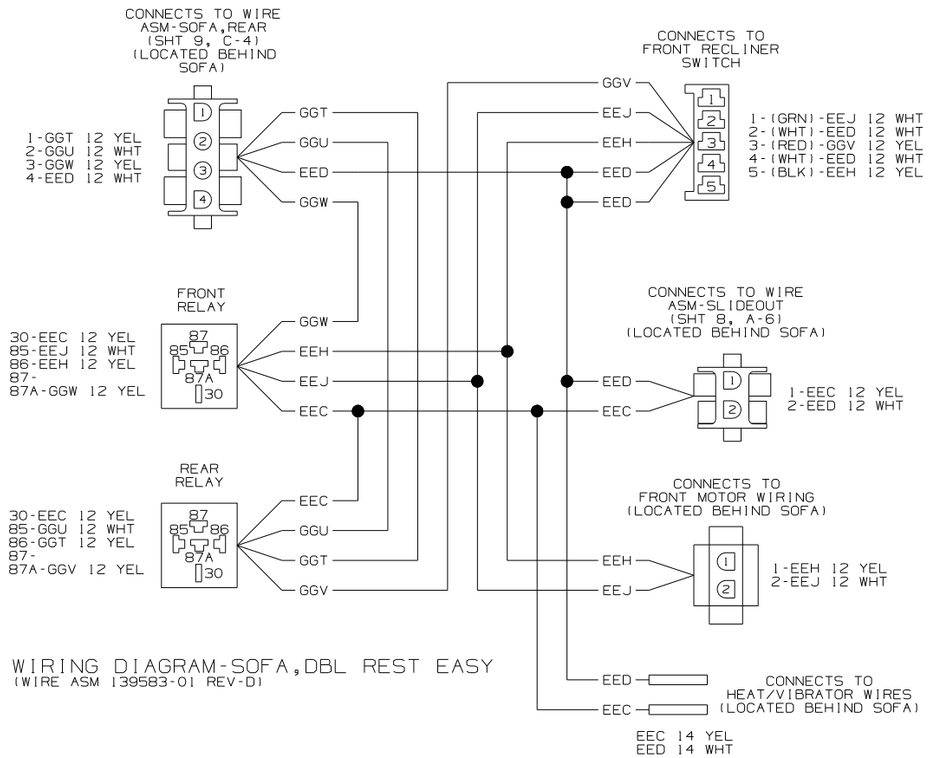

WIRING DIAGRAM-SOFA,DBL REST EASY
(WIRE ASM 139583-01 REV-D)

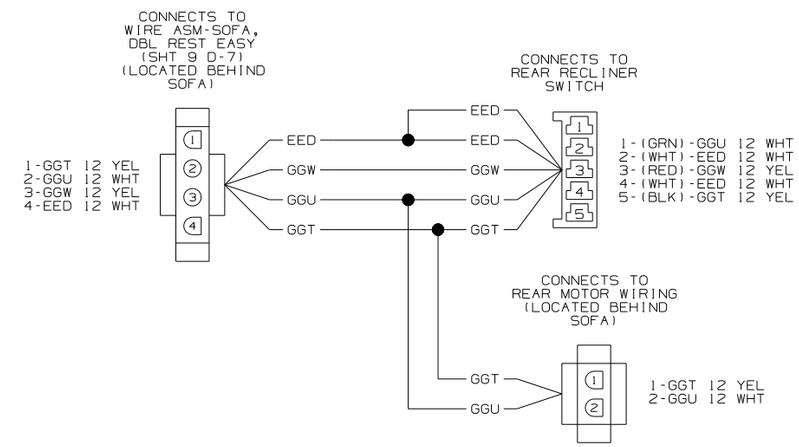

WIRING DIAGRAM-SOFA,DBL REST EASY
(WIRE ASM 139583-02 REV-D)

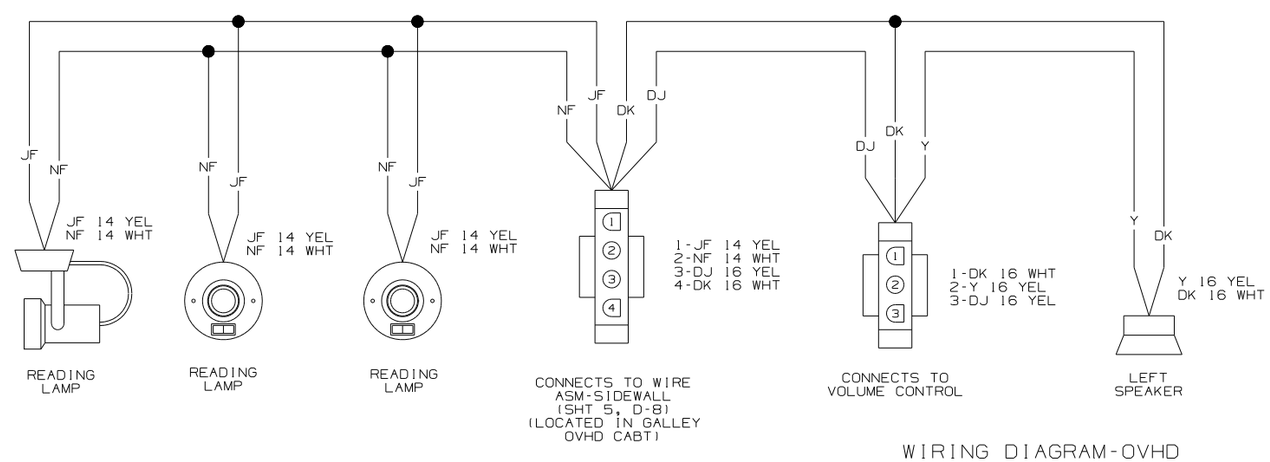

WIRING DIAGRAM-OVHD
(WIRE ASM 135015-02 REV-C)

FIRST USED	04 P34H
DO NOT SCALE DRAWING	
TITLE: WIRING DIAGRAM-BODY,12V	
SHEET X	PART NO 144816

DRAWING NO.	----------
144814-01	WIN
144814-02	ITA

RELEASE	REV A	DATE	DWG NO 144814
REV	ZONE	REVISION RECORD	DATE / DFTR-ORIG

MULTIPLE CHANGES

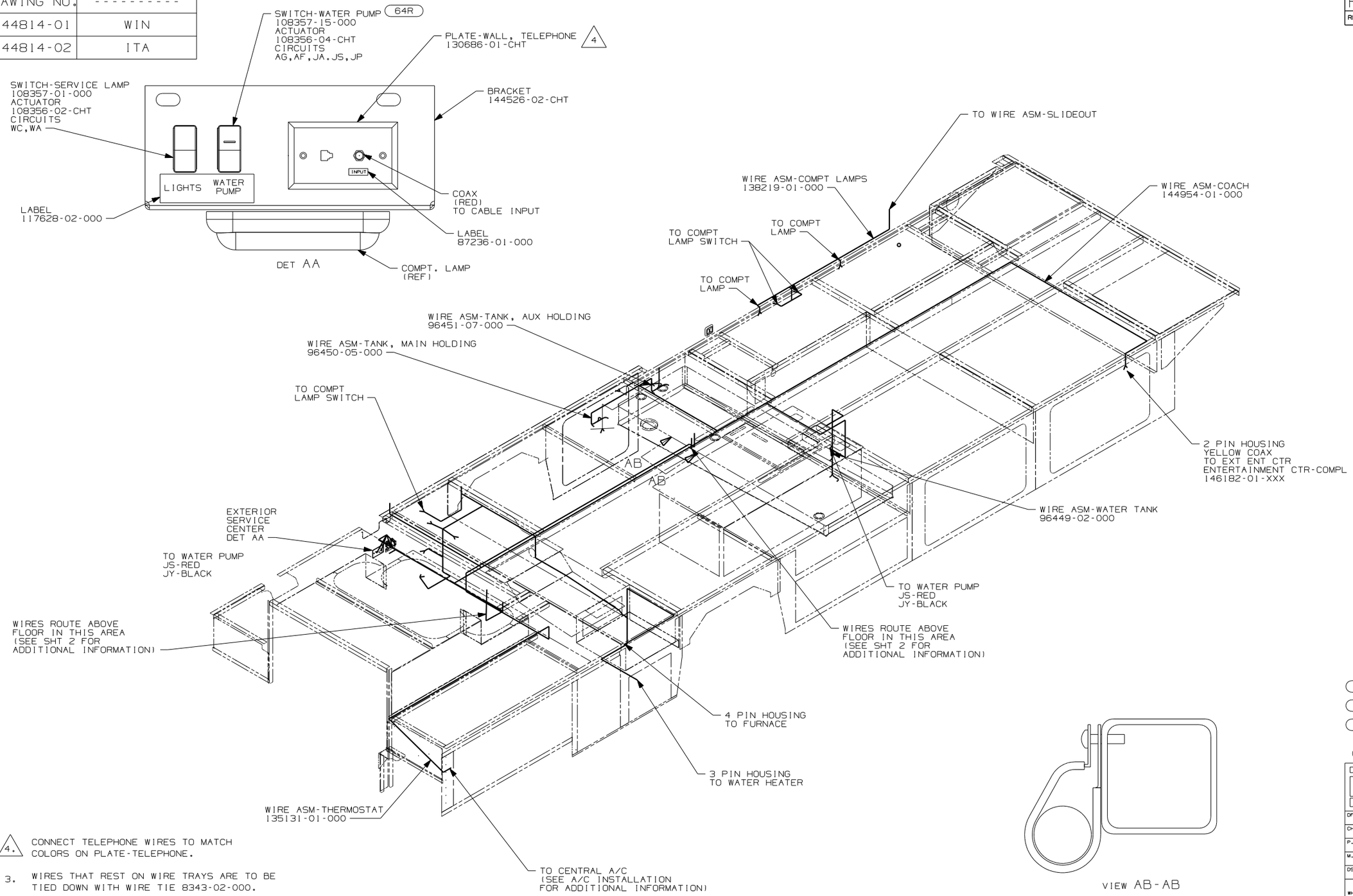

VIEW AB-AB

(64R) EXTERIOR WASH STATION

(1B1) CODES/STANDARDS USA

(265) CODES /STANDARDS-CSA/CMVSS

(1B1) (265)

4. CONNECT TELEPHONE WIRES TO MATCH COLORS ON PLATE-TELEPHONE.

3. WIRES THAT REST ON WIRE TRAYS ARE TO BE TIED DOWN WITH WIRE TIE 8343-02-000.

2. CLAMP TO FLOOR SUPPORT TUBES AS NECESSARY WITH CLAMP 10497-01-000.

1. ALL WIRE TO BE CLAMPED WITH CLAMP 10495-01-000 OR CLIP 80734-02-000 EVERY 700. USE SCREW G67-10-12B UNLESS OTHERWISE SPECIFIED.

NOTES:

FOR ELECTRICAL TORQUE SPECIFICATIONS SEE DWG NO. 128783-01-000

(X-X) FOR ELECTRICAL CALLOUTS SEE DWG NO. 121339-01-000

WINNEBAGO INDUSTRIES

COPYRIGHT 2004 WINNEBAGO INDUSTRIES, INC.

DFTR	ORIG. DATE
CHKR	ALL DIMENSIONS ARE IN MILLIMETERS
P.E.	
M.E.	FIRST USED 04 P34H
DSNR	

UNSPECIFIED TOLERANCES ARE:
WHOLE DIM (X) :
ONE-PLACE (X.X) :
TWO-PLACE (X.XX) :
ANGLE :

MATERIAL:

THIRD ANGLE PROJECTION

DO NOT SCALE DRAWING

TITLE: WIRING INSTL.-BODY, 12V

SHEET 1 OF 7 | PART NO 144814

DWG NO 144814

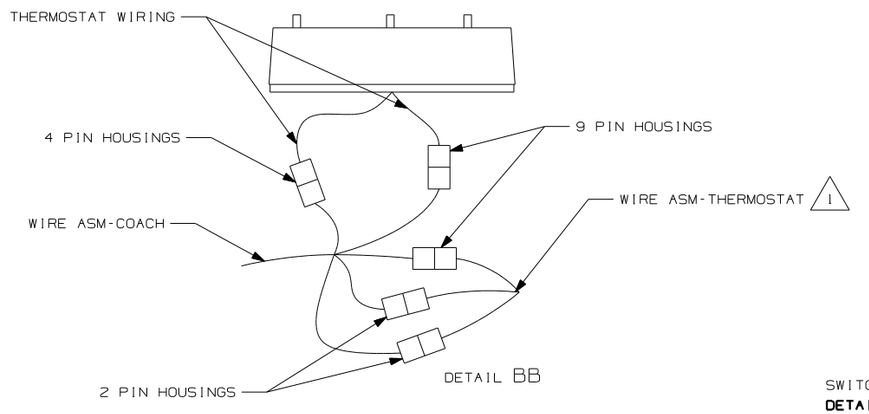

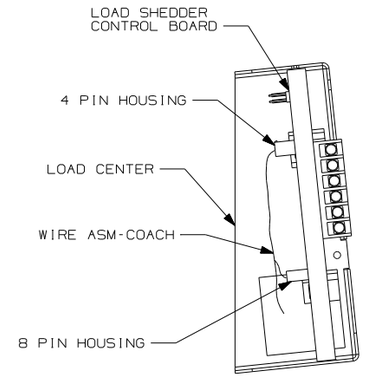

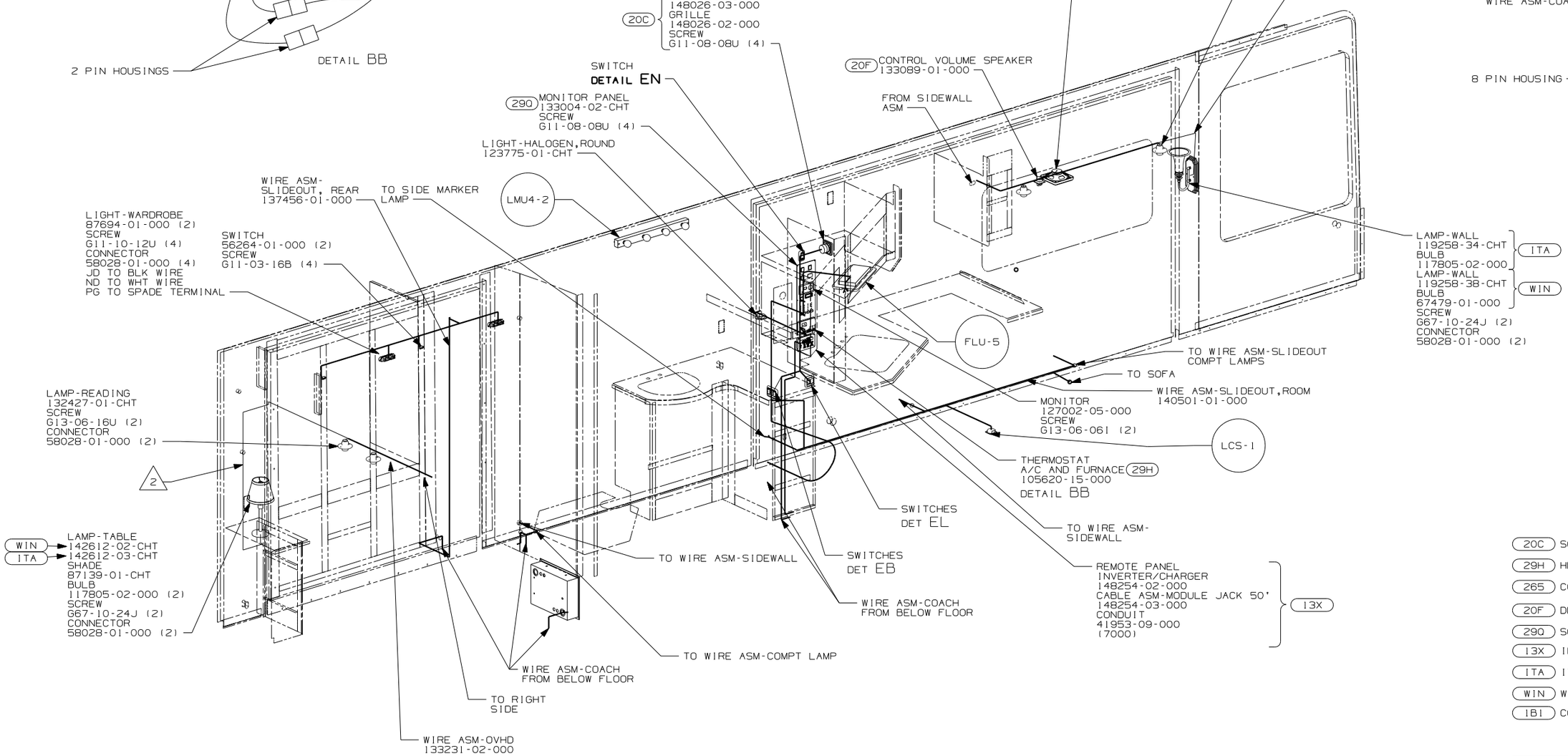

20C	SOUND SYS. DLX. W/O-SURROUND
29H	HEAT PUMP-A/C CENTRAL
265	CODES/STANDARDS-CSA/CMVSS
20F	DELUXE SOUND SYSTEM-WITHOUT
29Q	SOLAR PANEL-10 WATT
13X	INVERTER/CHARGER 2.0 KW
ITA	ITASCA ONLY
WIN	WINNEBAGO ONLY
1B1	CODES/STANDARDS USA

NOTES:

2 WIRE ROUTES OUT BACKWALL FROM OVHD AND BACK IN BACKSIDE OF NIGHTSTAND.

1 WITHOUT 29C PLUG THE TWO, TWO PIN HOUSINGS TOGETHER ON WIRE ASM-COACH.

FOR ELECTRICAL TORQUE SPECIFICATIONS SEE DWG NO. 128783-01-000

X-X FOR ELECTRICAL CALLOUTS SEE DWG NO. 121339-01-000

265 1B1

FIRST USED 04 P34H

DO NOT SCALE DRAWING

TITLE: WIRING INSTL.-BODY, 12V

SHEET 2 PART NO 144814

DWG NO 144814

FROM ROOF ASM
COAX-GRN
SPLITTER
86756-01-000
SCREW
G11-08-12B (2)
COAX-YEL
COAX-CABLE
87105-01-009
(UNMARKED)
TO CONNECTION ON TV
DETAIL CB (42Q)

PLATE-WALL, TELEPHONE
93253-01-CHT (4)
LAMP-READING
128786-01-CHT
BULB
123917-01-000
SCREW
G11-08-16J (2)
CONNECTOR
58028-01-000 (2)
WIRE ASM-OVHD
145000-01-000
WIN LIGHT-OVHD 93575-30-CHT
ITA 93575-31-CHT
BULB
WIN 117805-02-000 (3)
ITA 117805-02-000 (2)
CONNECTOR
58028-01-000 (2)
SCREW
G67-10-24J (2)
SWITCH
DETAIL EJ
SPEAKER-CUBE
148026-03-000
GRILLE
148026-02-000
SCREW
G11-08-08U (4) (20C)
4 PIN HOUSING
TO WIRE ASM-ROOF
CONTROL VOLUME SPEAKER
133089-01-000
SPEAKER-RADIO,TV
94097-01-000
GRILLE
90026-01-CHT
G11-08-08B (2) (20F)
DOOR SWITCH
DETAIL CD
RECEPTACLE-12V
132958-01-000
DETAIL CC
GROMMET
23942-01-000
SEAL
LIGHT-READING
132427-01-CHT (2)
SCREW
G13-06-16U (4)
CONNECTOR
58028-01-000 (4)
CE

42A ITA SPACER
1333713-07-CHT
WIN 133713-06-CHT
SCREW
G11-08-20D (4)
(4) PLATE-WALL,TELEPHONE (REF)
ALARM-CLOCK, DIGITAL
132738-01-CHT
SCREW
G11-06-08U (4) ITA 42A
DETAIL CF
RECEPTACLE-12V
132958-01-000
SCREW
G11-08-12B (2)
DETAIL CC

JF NF
DETAIL CC

JAMB-DOOR
SWITCH/MAGNET
STEP, ELECTRIC
11695-02-000
SCREW
G11-06-06B (4)
ROUTE WIRES THRU HOLE
GROMMET
8386-01-000
(3)
(2)
DETAIL CD (1E2)

SPLICE
PHONE WIRE
133613-01-000 (4)
TO REFRIGERATOR
(6)
TO 12 PIN HOUSING (2)
TO WIRE ASM-ROOF
COAX SPLITTER
SEE DETAIL CB
DETAIL EG
FROM WIRE
ASM-ROOF

STUD-ISOLATED
86233-01-000
NUT
D34-06-00B
SCREW
G11-08-12B (2)
BOOT
77479-02-000
J
M
FROM WIRE
ASM-CHASSIS
TO 12V BREAKER PANEL
DETAIL CA (79J) (7)

(5) WALL-PLATE,TELEPHONE
93253-01-CHT
RECPTACLE-12V
132958-01-000
SCREW
G11-08-12B (2)
DETAIL CC
DETAIL EH
(20C) SPEAKER
124884-01-000
GRILLE
124885-01-000
G11-08-12T (4)
12V BREAKER PANEL
(SEE SHT 4)
LPGD
CONVERTER
DETAIL CA
SWITCH
DETAIL EM
SWITCH
DETAIL EC
SWITCH
DETAIL EK
SWITCHES
DETAIL EA
LCS-1
CF

LAMP-WALL
119258-33-CHT
SHADE
119257-16-CHT
BULB
67479-01-000 (2) (ITA)
LAMP-WALL
119258-39-CHT
SHADE
87139-01-CHT
BULB
117805-02-000 (2) (WIN)
SCREW
G67-10-24J (2)
CONNECTOR
58028-01-000 (2)

STUD-ISOLATED
86233-01-000
NUT
D34-06-00B
SCREW
G11-08-12B (2)
BOOT
77479-02-000
CONVERTER
123058-01-000
K
J
M
WIRE FROM ASM-CHASSIS
TO GRND BAR
U,L
WIRE FROM 12V BREAKER PANEL
DETAIL CA (13B)

SWITCHES
DETAIL EF
SWITCHES
DETAIL ED
SWITCHES
DETAIL EE
SWITCH-DOORLOCKS
108357-07-000
ACTUATOR
108356-01-CHT
PLATE
98351-24-CHT
SCREW
G11-06-10J (40G)
LCS-1
DETAIL CE

(ITA) ITASCA ONLY
(WIN) WINNEBAGO ONLY
(40G) POWER DOOR LOCK WITH REMOTE
(21L) DINETTE TABLE/CHAIRS
(21K) DINING/COMPUTER TABLE/CHAIRS
(20F) DELUXE SOUND SYSTEM-WITHOUT
(14W) DINETTE
(13B) INVERTER/CHARGER-DC/AC W.O.
(1E2) ENTRANCE STEP ELEC.
(265) CODES/STANDARDS CSA/CMVSS
(1B1) CODES/STANDARDS USA

(20C) OUND SYS. DLX. W/Q-SURROUND
(42Q) TV-19" WITH REMOTE
(42A) CLOCK W/ALARM
(13X) INVERTER/CHARGER 2.0 KW

NOTES:

(4) CONNECT THE WIRES OF THE SAME COLOR TOGETHER.
(3) MOUNT SWITCH AND SPACER TO BLOCK ON JAMB ADJUST HEIGHT TO MATCH MAGNET.
(2) MOUNT MAGNET USING PILOT HOLES IN SCREEN DOOR FRAME. MOUNT WITH MAGNET TOWARD SWITCH
(1) WIRE ROUTED IN SIDEWALL
(7) REMOVE CIRCUIT K FROM LOOM AND CONNECT L & U TOGETHER WITH CONNECTOR 8312-01-000.
(6) LOCATION WITH (14W) OR (21L).
(5) LOCATION WITH (21K).

FOR ELECTRICAL TORQUE SPECIFICATIONS SEE DWG NO. 128783-01-000
(X-X) FOR ELECTRICAL CALLOUTS SEE DWG NO. 121339-01-000

(265) (1B1)

FIRST USED 04 P34H
DO NOT SCALE DRAWING
TITLE: WIRING INSTL.-BODY, 12V
SHEET 3 PART NO 144814

DWG NO 144814

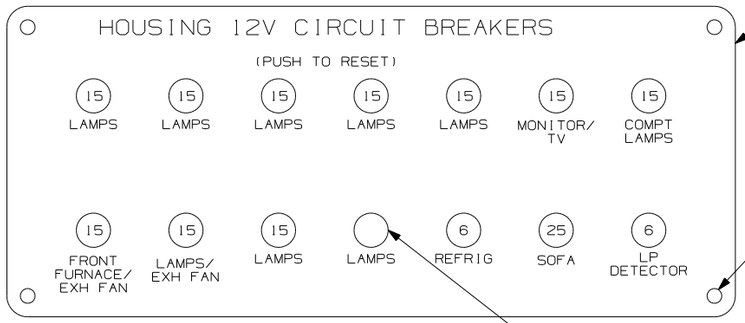

CIRCUIT BREAKER
(FRONT VIEW)

PLATE
139067-03-CHT
LABEL
92547-12-000

SCREW
G11-10-12U (4)

PLUG-PLASTIC,BLACK
81211-04-000

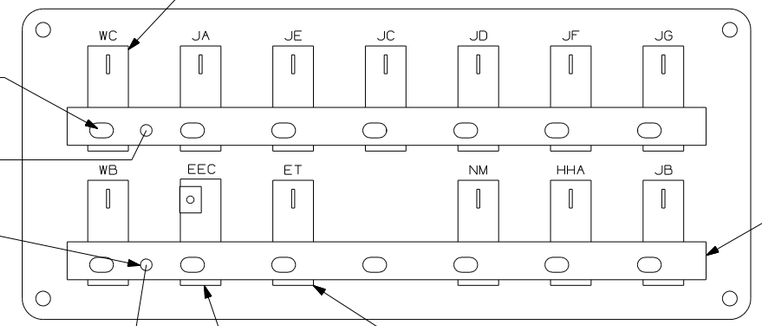

CIRCUIT BREAKER
93654-02-000 (10)

SCREW
G52-06-04B (14)

FROM WIRE J
ASM-CCOACH 6 BLK

SCREW
G39-08-06B (2)

FROM WIRE K
ASM-CHASSIS 6 BLK

DA

DA

BUSS BAR
92786-06-000 (2)

CIRCUIT BREAKER
93655-01-000
(25 AMP)
SCREW
G52-06-04B
WASHER
OME02B

CIRCUIT BREAKER
93654-01-000 (2)

CIRCUIT BREAKER
(BACK VIEW)

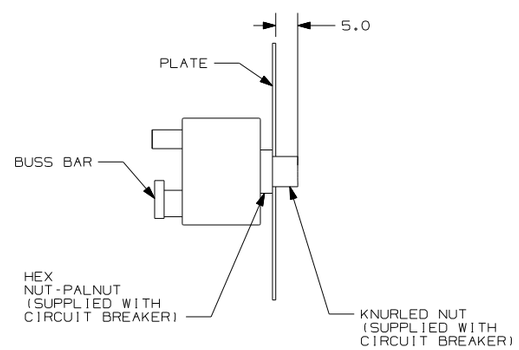

DETAIL DA

265 CODES/STANDARDS CSA/CVSS

181 CODES/STANDARDS USA

NOTES:

FOR ELECTRICAL TORQUE SPECIFICATIONS SEE DWG NO. 128783-01-000

X-X FOR ELECTRICAL CALLOUTS SEE DWG NO. 121339-01-000

181 265

FIRST USED 04 P34H

DO NOT SCALE DRAWING

TITLE: WIRING INSTL.-BODY, 12V

SHEET 4

PART NO 144814

DWG NO 144814

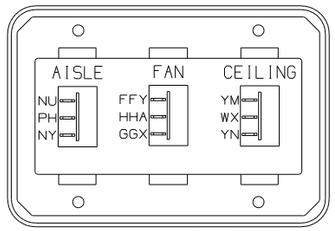

SWITCH-ROCKER
135740-02-CHT (2)
135740-04-CHT
SWITCH-BASE
135741-03-CHT
SWITCH-BEZEL
135742-23-CHT
SCREW
G11-08-08U (4)
WIRE ASM-RESISTOR,FAN (1)
140195-01-000

DETAIL EA (41Y)

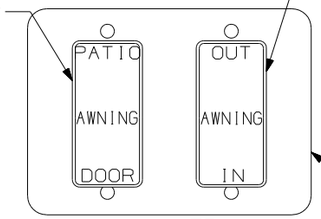

SWITCH-AWNING SELECTOR
108357-08-000
ACTUATOR
108356-13-CHT
CIRCUITS
FFU,FFP,FFV (63N)

SWITCH-AWNING CONTROL
108357-06-000
ACTUATOR
108356-12-CHT (52N)
CIRCUITS
FFK,FFU,FFM,
FFN,FFU,FFR

PLATE
98351-22-CHT
SCREW
G11-06-10U (4)

DETAIL ED (9CI)
(FRONT SIDE)

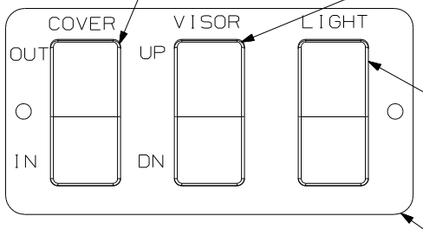

SWITCH-COVER
108357-06-000
ACTUATOR-SWITCH
108356-01-CHT
CIRCUITS
GX,HHC,KA,HHD

SWITCH-VISOR
108357-06-000
ACTUATOR-SWITCH (28J)
108356-01-CHT
CIRCUITS
HHN,MK,HHM,MN
SWITCH-BLANK (28K)
96241-03-000

SWITCH-LAMPS
108357-01-000
ACTUATOR-SWITCH
108356-01-CHT
CIRCUITS
NM,HA,O

PLATE-SWITCH
142487-01-CHT
APPLIQUE
142475-01-CHT
SCREW
G11-06-10U (2)

DETAIL EF

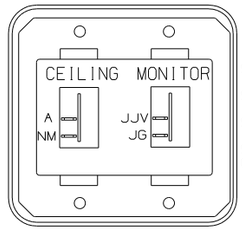

SWITCH-ROCKER
135740-01-CHT (2)
SWITCH-BASE
135741-02-CHT
SWITCH-BEZEL
135742-31-CHT
SCREW
G11-08-08U (4)

DETAIL EL

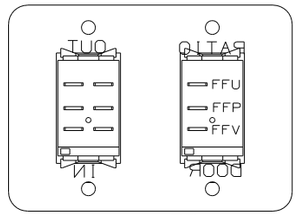

DETAIL ED (9CI)
(BACK SIDE)

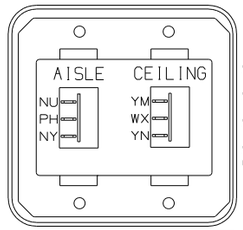

SWITCH-ROCKER
135740-02-CHT (2)
SWITCH-BASE
135741-02-CHT
SWITCH-BEZEL
135742-13-CHT
SCREW
G11-08-08U (4)

DETAIL EA (412)

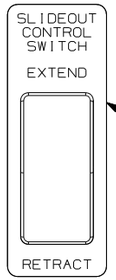

PLATE-SWITCH
144363-09-CHT
SWITCH
108357-06-CHT
ACTUATOR
108356-02-CHT
NUT
D65-08-00B (2)
LABEL
116220-01-000

LABEL-WARNING
116549-01-000

WARNING UNDERSTAND OPERATOR'S MANUAL BEFORE USING
KEEP PEOPLE AND OBSTRUCTIONS CLEAR OF
SLIDEOUT ROOM WHEN OPERATING TO AVOID
INJURY AND/OR PROPERTY DAMAGE

DETAIL EG
(FRONT VIEW)

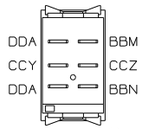

DETAIL EG
(REAR VIEW)

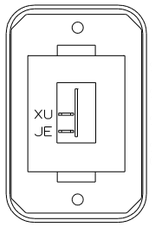

SWITCH-ROCKER
135740-01-CHT
SWITCH-BASE
135741-01-CHT
SWITCH-BEZEL
135742-01-CHT
SCREW
G11-08-08U (2)

DETAIL EJ

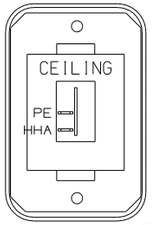

SWITCH-ROCKER
135740-01-CHT
SWITCH-BASE
135741-01-CHT
SWITCH-BEZEL
135742-07-CHT
SCREW
G11-08-08U (2)

DETAIL EM (WIN)

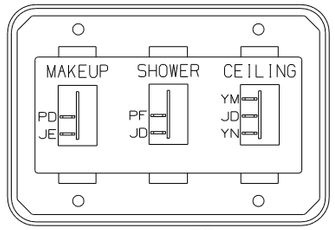

SWITCH-ROCKER
135740-01-CHT (2)
135740-02-CHT
SWITCH-BASE
135741-03-CHT
SWITCH-BEZEL
135742-28-CHT
SCREW
G11-08-08U (4)

DETAIL EB

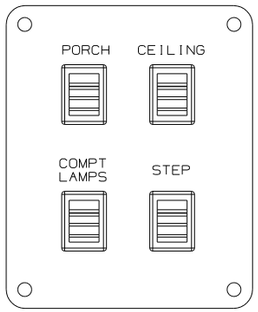

DETAIL EE
(FRONT SIDE)

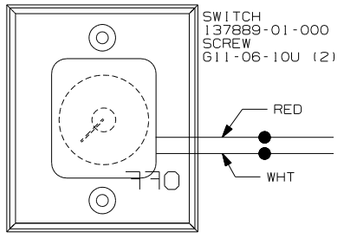

SWITCH
137889-01-000
SCREW
G11-06-10U (2)

DETAIL EK (ITA)

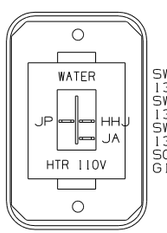

SWITCH-ROCKER
135740-06-CHT
SWITCH-BASE
135741-01-CHT
SWITCH-BEZEL
135742-35-CHT
SCREW
G11-08-08U (2)

DETAIL EN

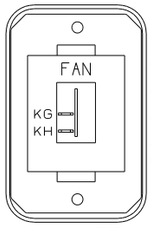

SWITCH-ROCKER
135740-01-CHT
SWITCH-BASE
135741-01-CHT
SWITCH-BEZEL
135742-12-CHT
SCREW
G11-08-08U (2)

DETAIL EC

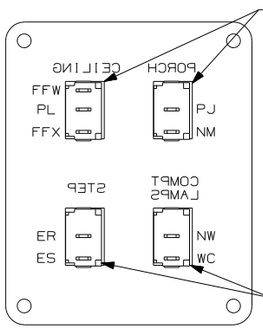

FROM WIRE
ASM-COACH

SWITCH
132180-01-CHT (3)
132180-02-CHT
PLATE-SWITCH
98351-08-CHT
SCREW
G11-06-10J (4)

FROM WIRE
ASM-CHASSIS

DETAIL EE
(BACK SIDE)

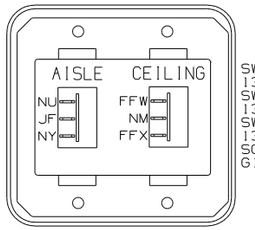

SWITCH-ROCKER
135740-02-CHT (2)
SWITCH-BASE
135741-02-CHT
SWITCH-BEZEL
135742-13-CHT
SCREW
G11-08-08U (4)

DETAIL EH

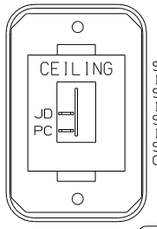

SWITCH-ROCKER
135740-01-CHT
SWITCH-BASE
135741-01-CHT
SWITCH-BEZEL
135742-07-CHT
SCREW
G11-08-08U (2)

DETAIL EK (WIN)

(ITA) ITASCA ONLY
(WIN) WINNEBAGO ONLY
(28K) SUNVISORS - MANUAL (2)
(28J) SUNVISORS - POWERED (2)
(52N) AWNING-PATIO, ELECTRIC
(63N) AWNING-ENTRANCE DR, ELECTRIC
(9CI) AWNING-ELECTRIC PACKAGE

(1) CONNECT WIRE ASM RESISTOR TO 2-PIN HOUSING
LOCATED BY SWITCH WIRES.

NOTES:

FOR ELECTRICAL TORQUE SPECIFICATIONS SEE DWG NO. 128783-01-000

(X-X) FOR ELECTRICAL CALLOUTS SEE DWG NO. 121339-01-000

FIRST USED	04 P34H
DO NOT SCALE DRAWING	
TITLE: WIRING INSTL.-BODY, 12V	
SHEET 5	PART NO 144814

DWG NO 144814

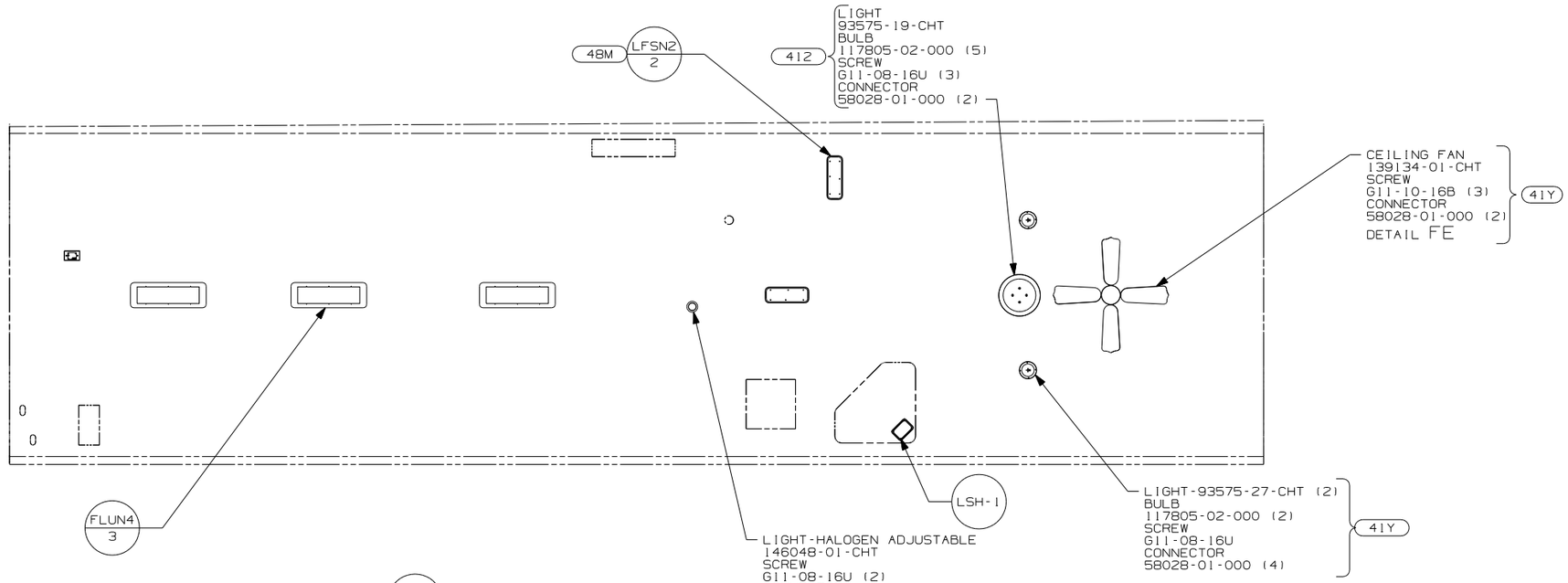

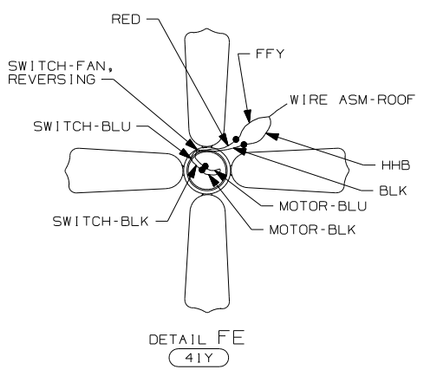

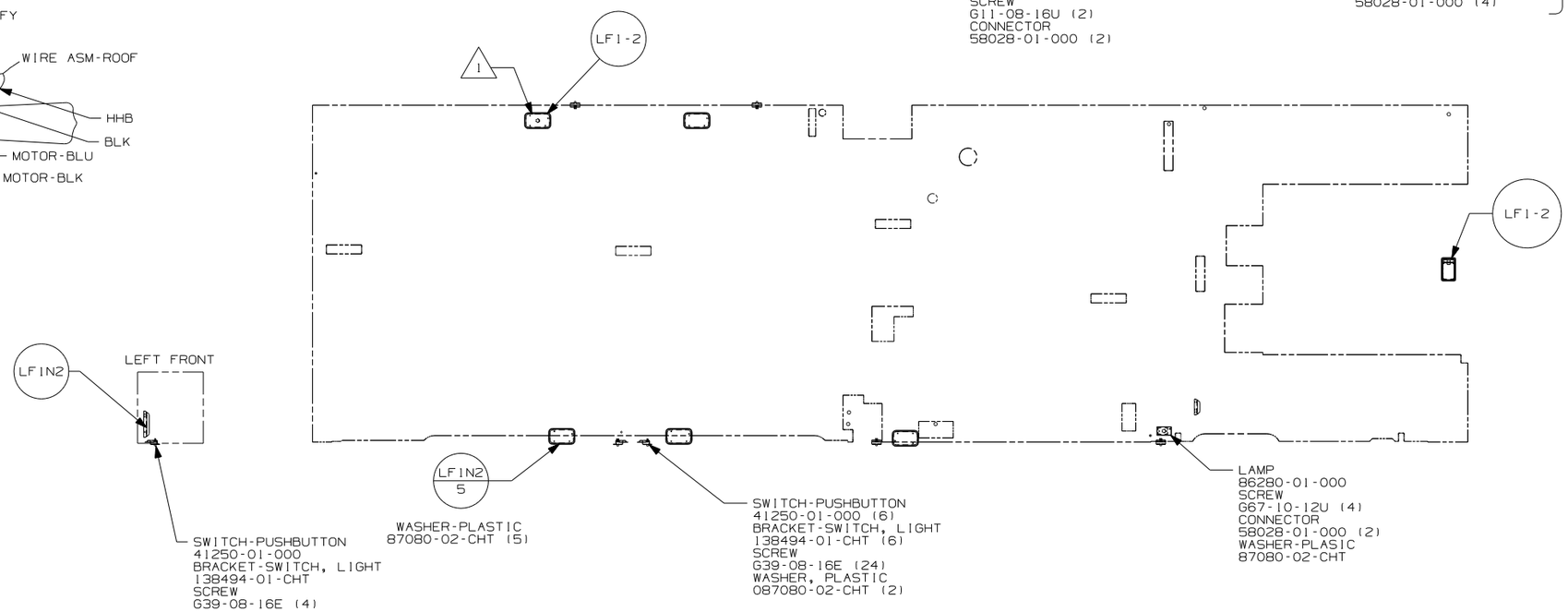

41Y	FAN-CEILING
48M	LIGHTS-ICANDESCENT
412	DECORATIVE LIGHT-CEILING
WIN	ENTERTAINMENT CTR/EXT W/CD
ITA	ITASCA ONLY
48V	LIGHTS-FLUORESCENT
265	CODES STANDARDS-CSA/CMVSS
IBI	CODES STANDARDS USA

1 LAMPS TO BE MOUNTED 75 ±20 FROM EDGE OF FLOOR.

NOTES:

FOR ELECTRICAL TORQUE SPECIFICATIONS SEE DWG NO. 128783-01-000

X-X FOR ELECTRICAL CALLOUTS SEE DWG NO. 121339-01-000

IBI 265

FIRST USED 04 P34H

DO NOT SCALE DRAWING

TITLE: WIRING INSTL.-BODY, 12V

SHEET 6 PART NO 144814

DWG NO 144814

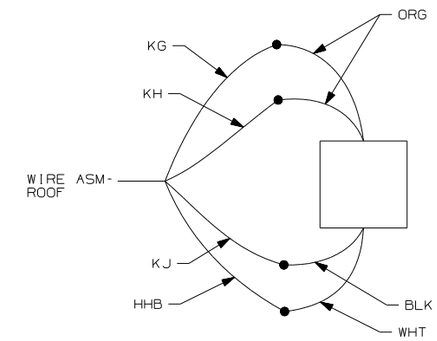

DETAIL GA

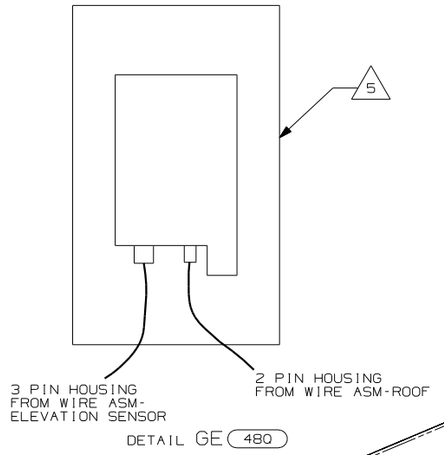

DETAIL GE (480)

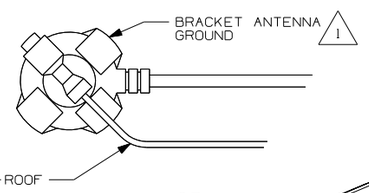

VIEW GB

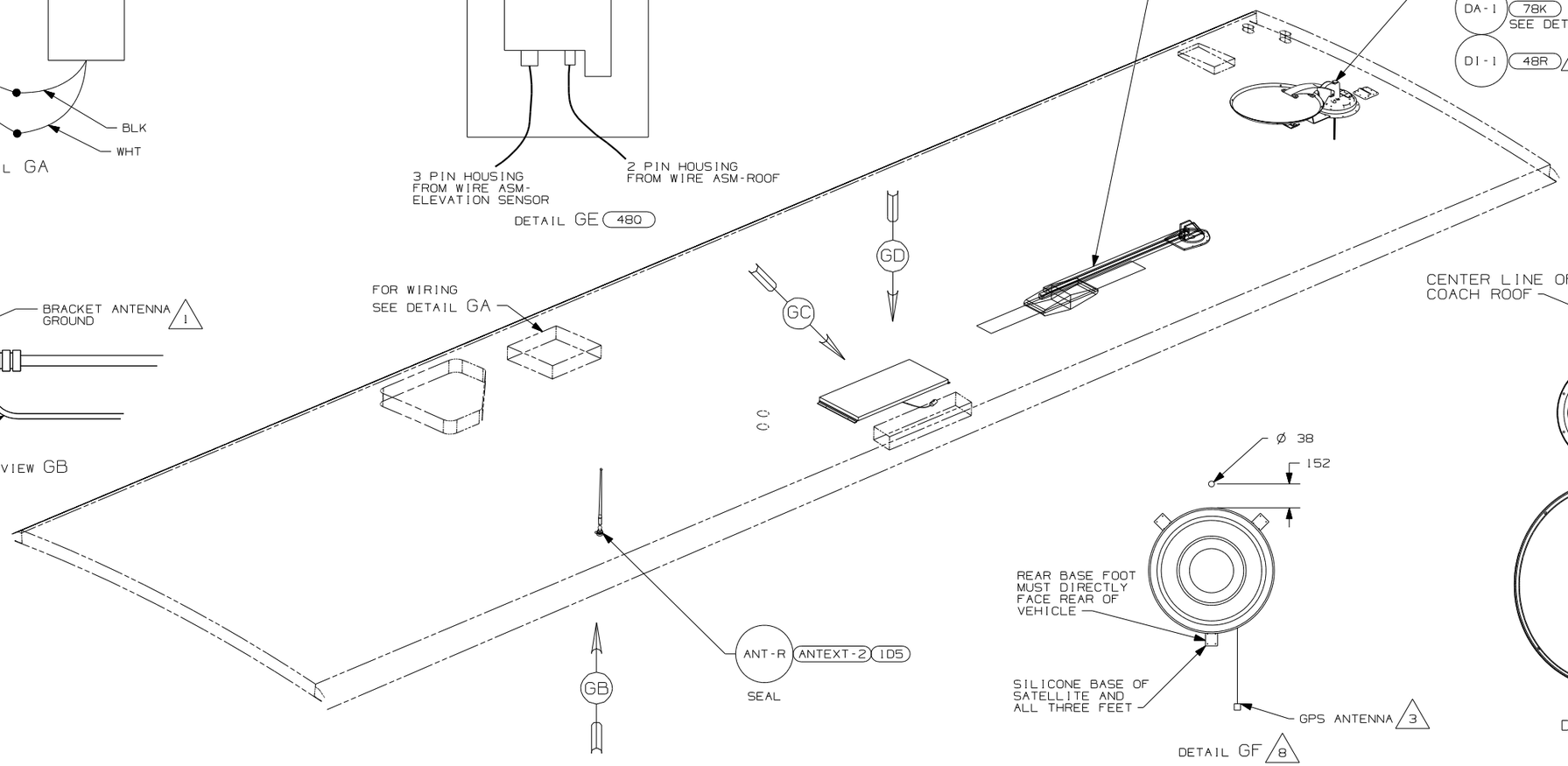

DETAIL GF 8

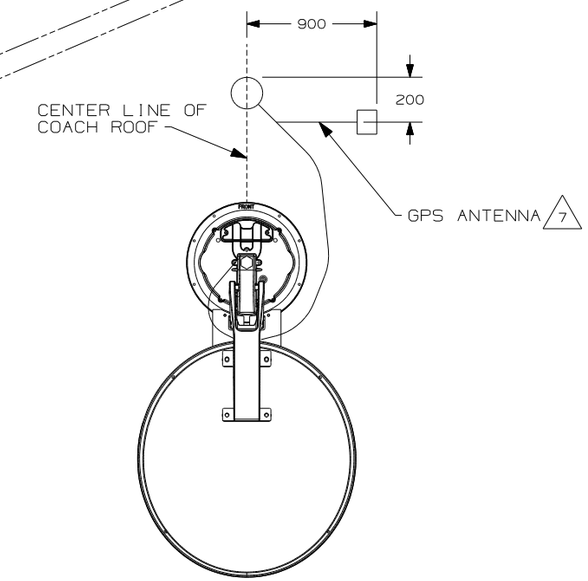

DETAIL GG

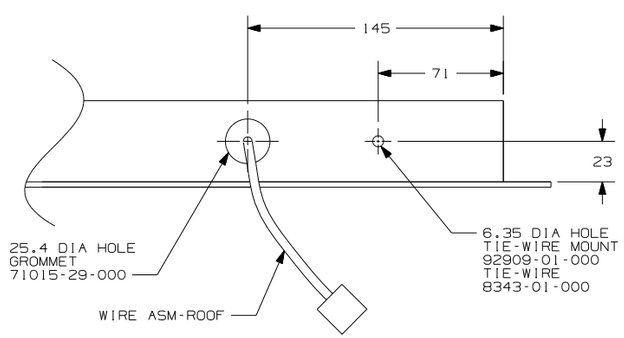

VIEW GC 6

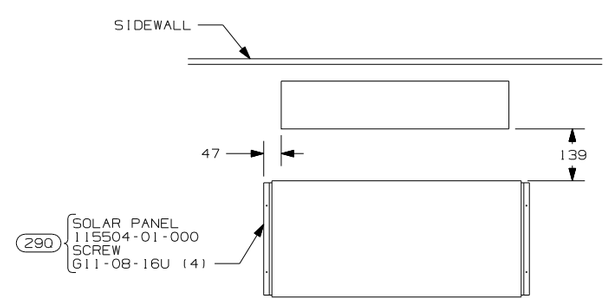

VIEW GD

8 CUT AND REMOVE SHIPPING STRAPS.

7 MOUNT GPS ANTENNA TO THE RIGHT OF THE SATELLITE AS SHOWN. SECURE CABLE WITH ROOF SEALANT.

6 FASTEN TO VENT.

5 SENSOR SUPPLIED WITH SATELLITE ASSEMBLY.

4 SEE DETAIL GE FOR ELEVATION SENSOR ASSEMBLY.

3 MOUNT GPS ANTENNA REARWARD OF ANTENNA AS FAR AS POSSIBLE & REMOVE SHIPPING STRAPS.

2 SEE DETAIL GF FOR SATELLITE LOCATION.

1 WRAP BRACKET LEGS AROUND ANTENNA BASE.

NOTES:

48R SAT SYS IN-MOTION W/O RCVR
78K SATELLITE DISH-AUTOMATIC
480 SATELLITE DISH & ELEV.SENSOR
290 SOLAR PANEL-10 WATT
1D5 ENTERTAINMENT CENTR/EXT W/CD
193 TV ANTENNA-AMPLIFIED SYSTEM
265 CODES/STANDARD-CSA/CMVSS
1B1 CODES/STANDARDS USA

1B1 265

FOR ELECTRICAL TORQUE SPECIFICATIONS SEE DWG NO. 128783-01-000

X-X FOR ELECTRICAL CALLOUTS SEE DWG NO. 121339-01-000

FIRST USED 04 P34H

DO NOT SCALE DRAWING

TITLE: WIRING INSTL.-BODY, 12V

SHEET 7 PART NO 144814

RELEASE	REV A	DATE	DWG NO 144813
REV	ZONE	REVISION RECORD	DATE / DFTR-ORIG

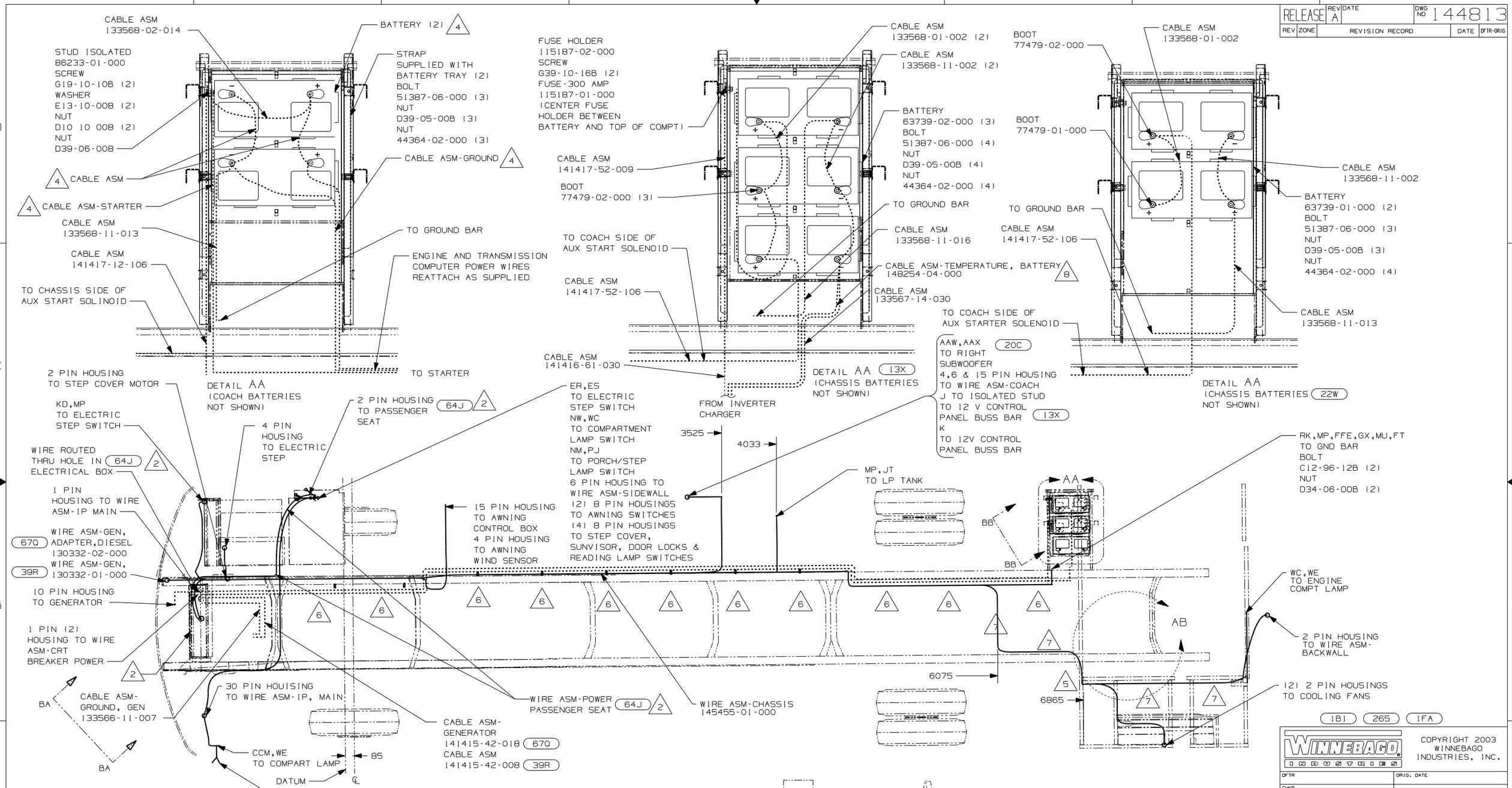

7 CLAMP 10497-03-000, SCREW G39-08-12B.

6 CLAMP 83610-01-000, SCREW G39-08-12B

5 USE WIRE TIE 8343-04-000 TO SECURE WIRES TO FLOOR SUPPORT FRAME AT LEAST ONCE EVERY 600MM.

4 SUPPLIED WITH CHASSIS.

3 SECURE CORD AWAY FROM ALL MOVING PARTS AND EXHAUST WITH TIE-WIRE 93147-01-000 AS REQUIRED

2 SEE WIRING INSTL-FRONT END FOR ADDITIONAL INFORMATION

8 CONNECT RING TERMINAL OF CABLE ASM-TEMP,BATTERY TO NEGATIVE POST AS SHOWN AND ROUTE CABLE WITH NEGATIVE BATTERY CABLE TO INVERTER.

1 LEGEND: ———— WINEBAGO: - - - - - - - - - - CABLE: —·—·—·— CHASSIS SUPPLIED WIRING

NOTES:

64J SEAT PED-6-WAY DR/PASS POWER
13X INVERTER/CHARGER-2,000 WATT
670 GEN-7.5KW-ONAN-QUIET DIESEL
39R GEN-6.5KW-ONAN-LP-MARQUIS
265 CODES/STANDARDS-CSA/CMVSS
22W BATTERY-TWO
20C SOUND SYSTEM DELUXE
1FA FRTL. 27,910,300 5.9L 5-SP
1B1 CODES/STANDARDS USA

1B1 265 1FA

WINNEBAGO INDUSTRIES

COPYRIGHT 2003 WINNEBAGO INDUSTRIES, INC.

DFTR	ORIG. DATE
CHKR	ALL DIMENSIONS ARE IN MILLIMETERS
P.E.	
M.E.	FIRST USED 04 P34H
DSNR	

UNSPECIFIED TOLERANCES ARE: WHOLE DIM (X) : ; ONE-PLACE (X.X) : ; TWO-PLACE (X.XX) : ; ANGLE :

MATERIAL: • • • •

THIRD ANGLE PROJECTION

DO NOT SCALE DRAWING

TITLE: WIRING INSTL-CHASSIS

SHEET 1 OF 2 | PART NO 144813

DWG NO 144813

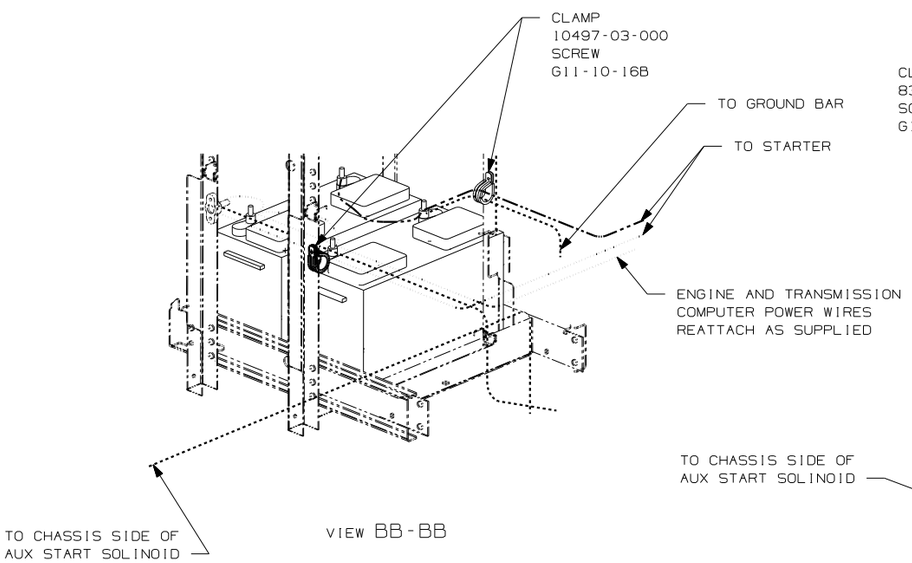

VIEW BB-BB

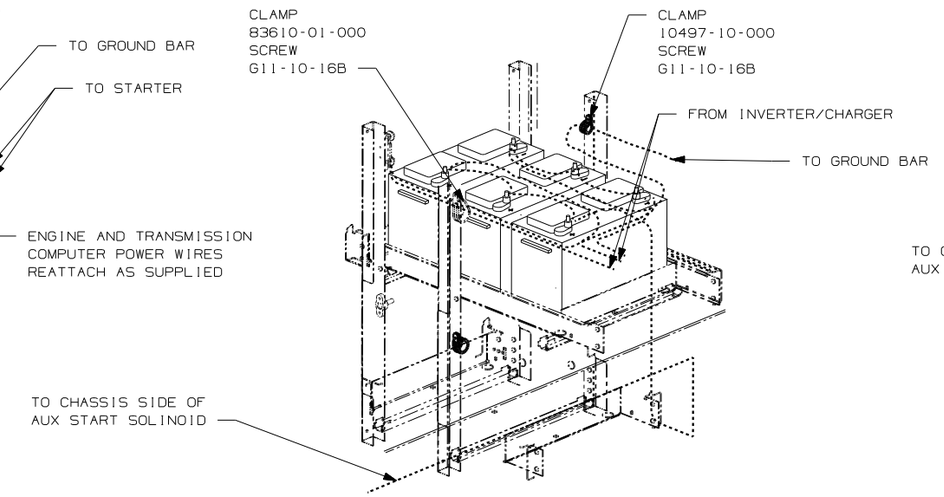

VIEW BB-BB (13X)

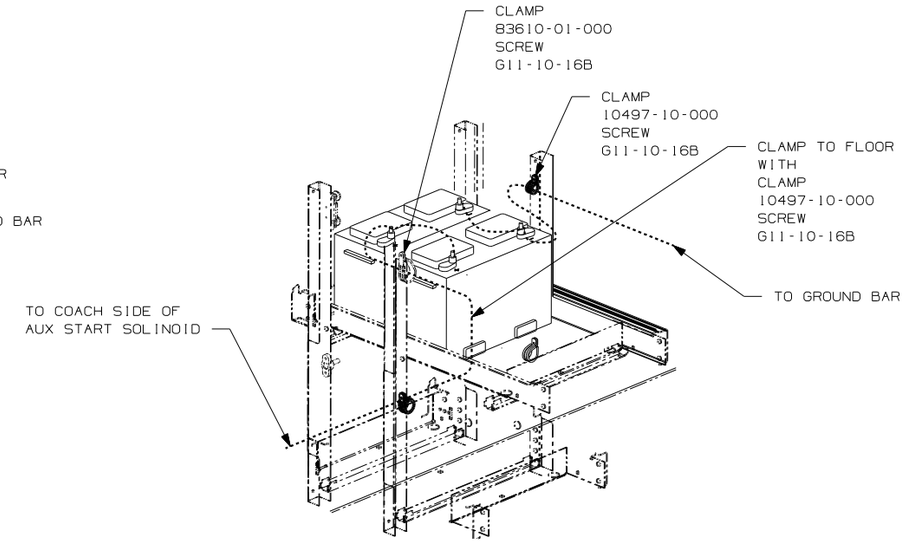

VIEW BB-BB (22W)

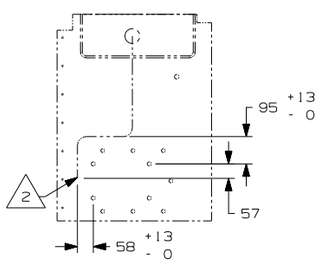

VIEW BC (64J)

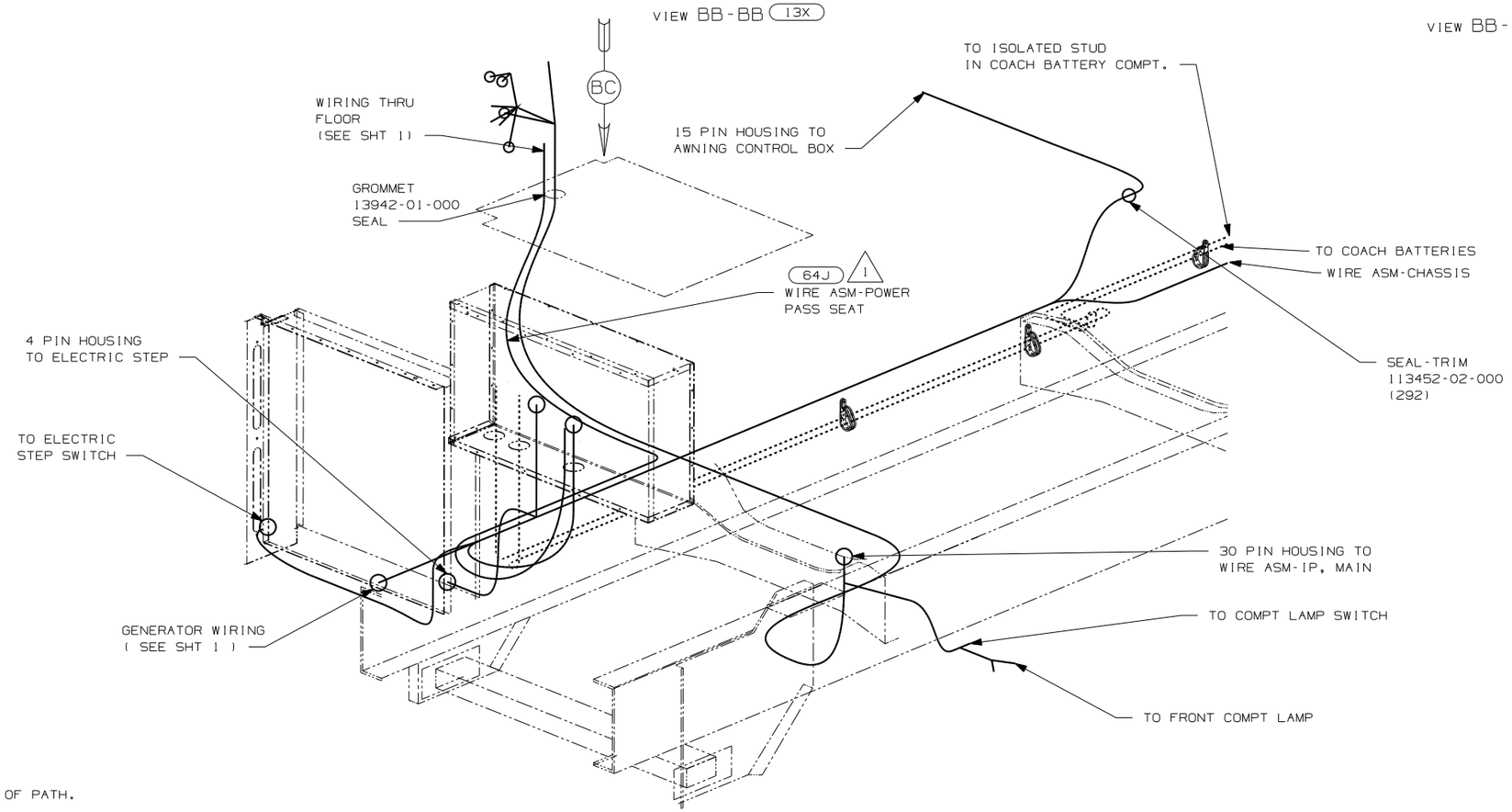

VIEW BA-BA

(64J) SEAT PED-6-WAY DR/PASS POWER
(13X) INVERTER/CHARGER-2,000 WATT
(22W) BATTERY-TWO

NOTES:

2. LEAVE 675 ± 50MM OF WIRE AT END POINT OF PATH.
1. SEE WIRING INSTL-FRONT END FOR ADDITIONAL INFORMATION.

FIRST USED	04 P34H
	DO NOT SCALE DRAWING
TITLE:	WIRING INSTL-CHASSIS
SHEET 2	PART NO 144813

DWG NO	SHEET
145057-01	1
145057-02	2
145057-03	3
145057-04	4
145057-05	5
145057-06	6
145057-07	7
145057-08	8

RELEASE	REV A	DATE	DWG NO 145057
REV	ZONE	REVISION RECORD	DATE / DFTR-ORIG

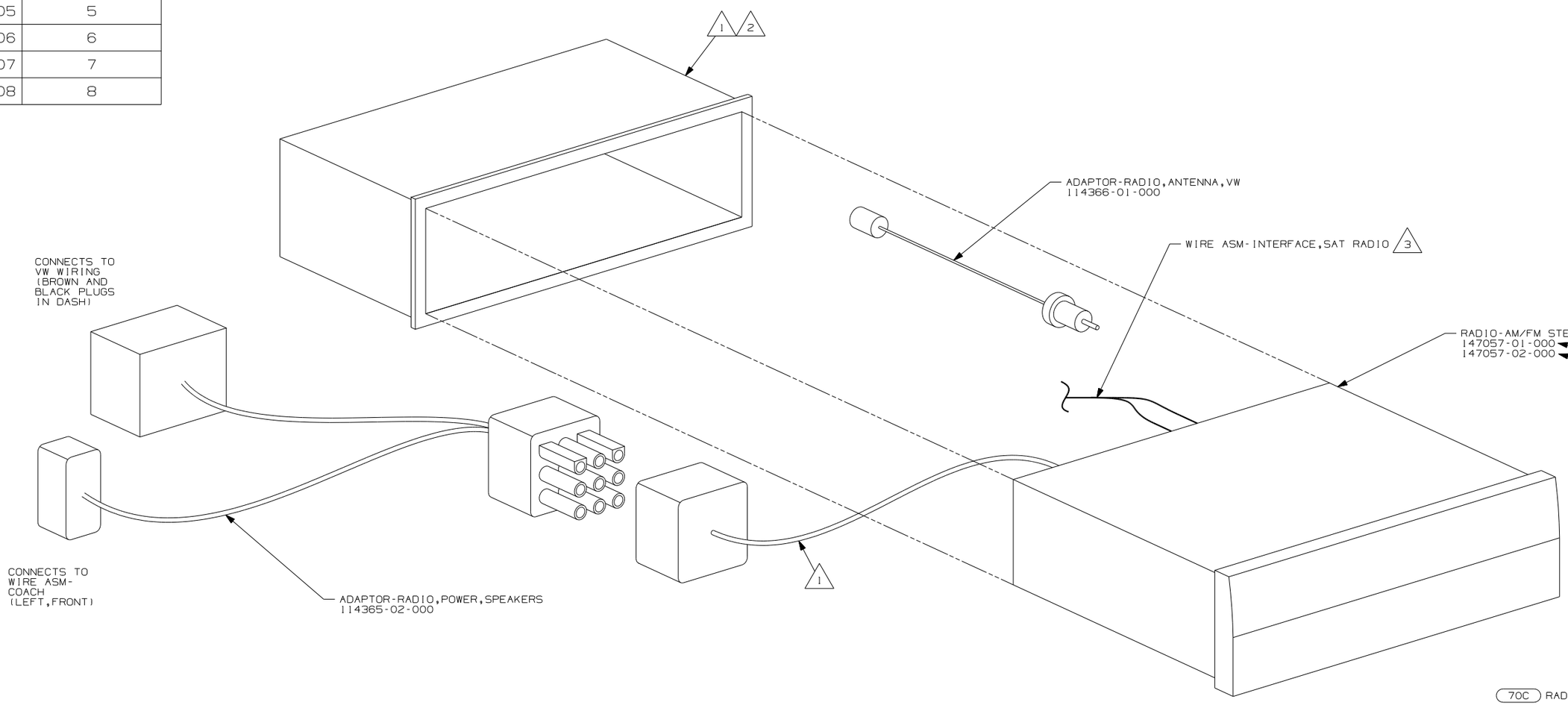

70C RADIO - SATELLITE

19V RADIO-AM/FM STEREO CD PLAYER

H-BODY, B-VAN, 200 SERIES

WINNEBAGO INDUSTRIES

COPYRIGHT 2004
WINNEBAGO
INDUSTRIES, INC.

DFTR	ORIG. DATE
CHKR	ALL DIMENSIONS ARE IN MILLIMETERS
P.E.	
M.E.	FIRST USED
DSNR	04 MOTORHOMES

UNSPECIFIED TOLERANCES ARE:
WHOLE DIM (X) :
ONE-PLACE (X.X) :
TWO-PLACE (X.XX) :
ANGLE :

MATERIAL:

THIRD ANGLE PROJECTION

DO NOT SCALE DRAWING

TITLE: RADIO INSTL

SHEET 1 OF 8 | PART NO 145057

3 TO SATELLITE RECEIVER. SEE WIRING INSTL-FRONT END FOR ADDITIONAL INFORMATION.

2 BEND TABS ON ALL 4 SIDES TO SECURE MOUNTING BRACKET TO DASH OPENING.

1 SUPPLIED WITH RADIO

NOTES:

DWG NO 145057

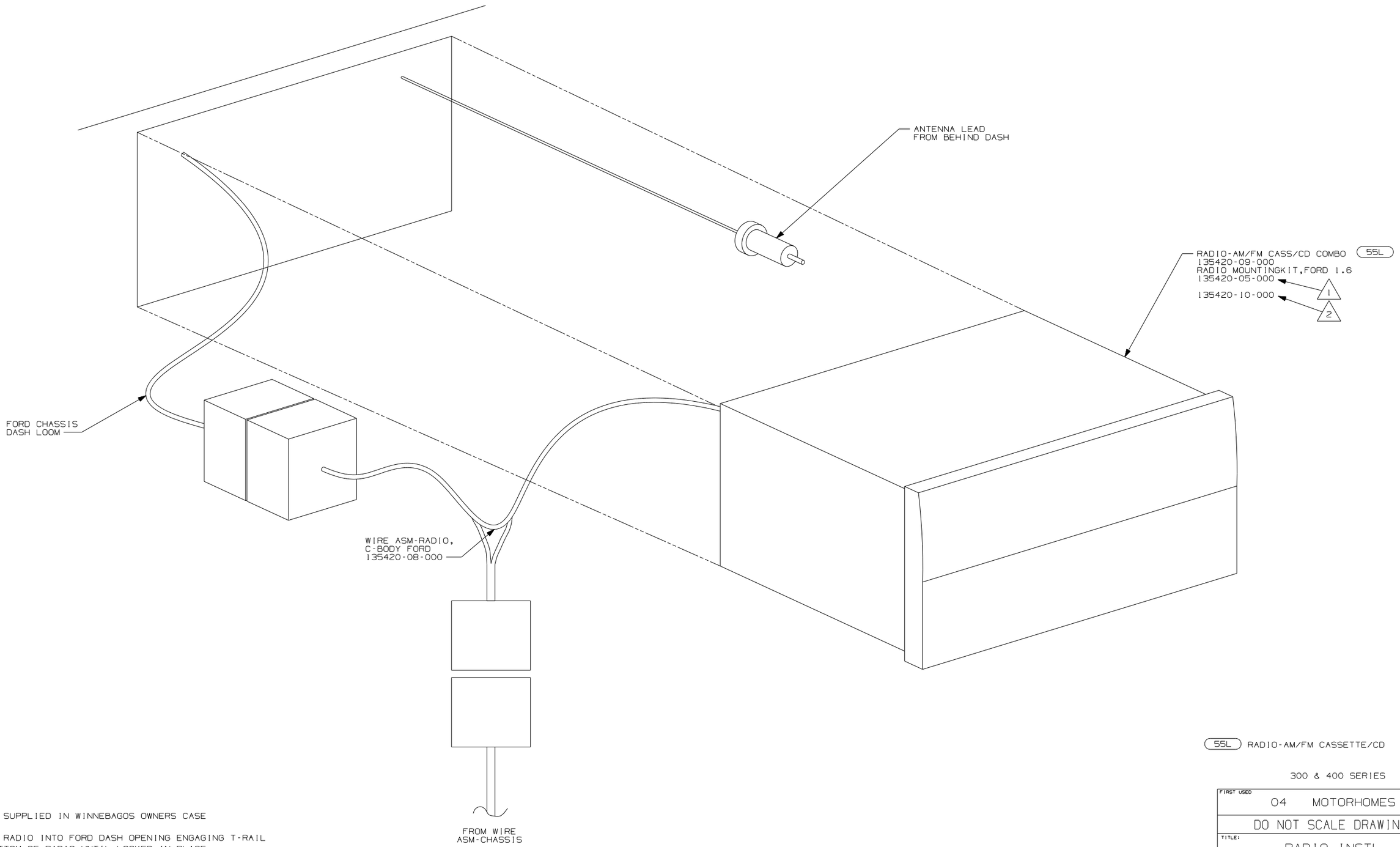

55L RADIO-AM/FM CASSETTE/CD

300 & 400 SERIES

NOTES:

2 TO BE SUPPLIED IN WINNEBAGOS OWNERS CASE

1 SLIDE RADIO INTO FORD DASH OPENING ENGAGING T-RAIL ON BOTTOM OF RADIO UNTIL LOCKED IN PLACE.

FIRST USED 04 MOTORHOMES	
DO NOT SCALE DRAWING	
TITLE: RADIO INSTL	
SHEET 2	PART NO 145057

DWG NO 145057

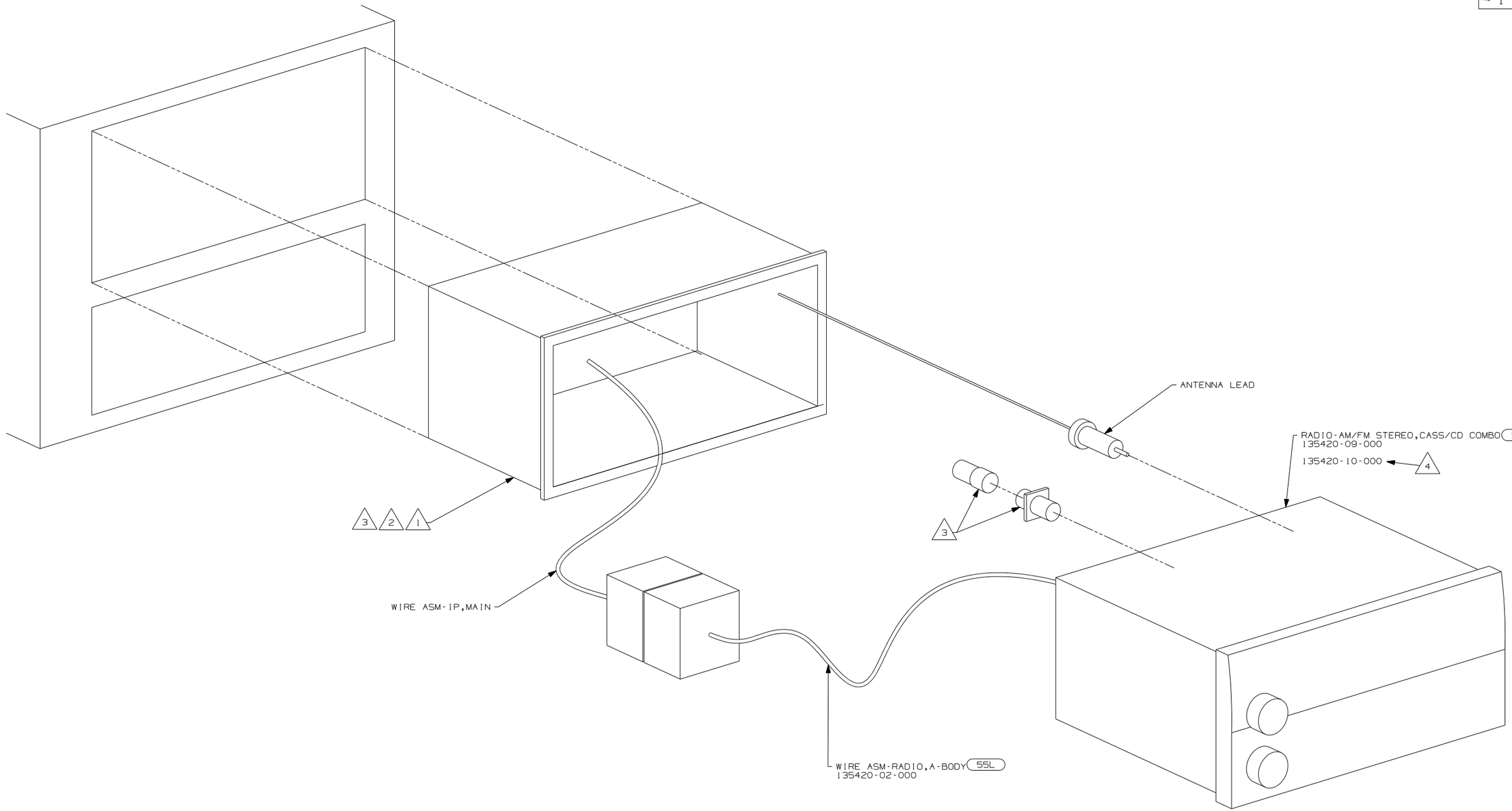

NOTES:

4. TO BE SUPPLIED IN WINNEBAGOS OWNERS CASE
3. SUPPLIED WITH MOUNTING KIT 135420-07-000 (55L) ONLY.
2. BEND TABS ON ALL 4 SIDES TO SECURE MOUNTING BRACKET TO DASH OPENING.
1. SUPPLIED WITH RADIO (24N) ONLY.

(55L) RADIO-AM/FM CASSETTE/CD

D SERIES

FIRST USED	04 MOTORHOMES
	DO NOT SCALE DRAWING
TITLE:	RADIO INSTL
SHEET 3	PART NO 145057

DWG NO 145057

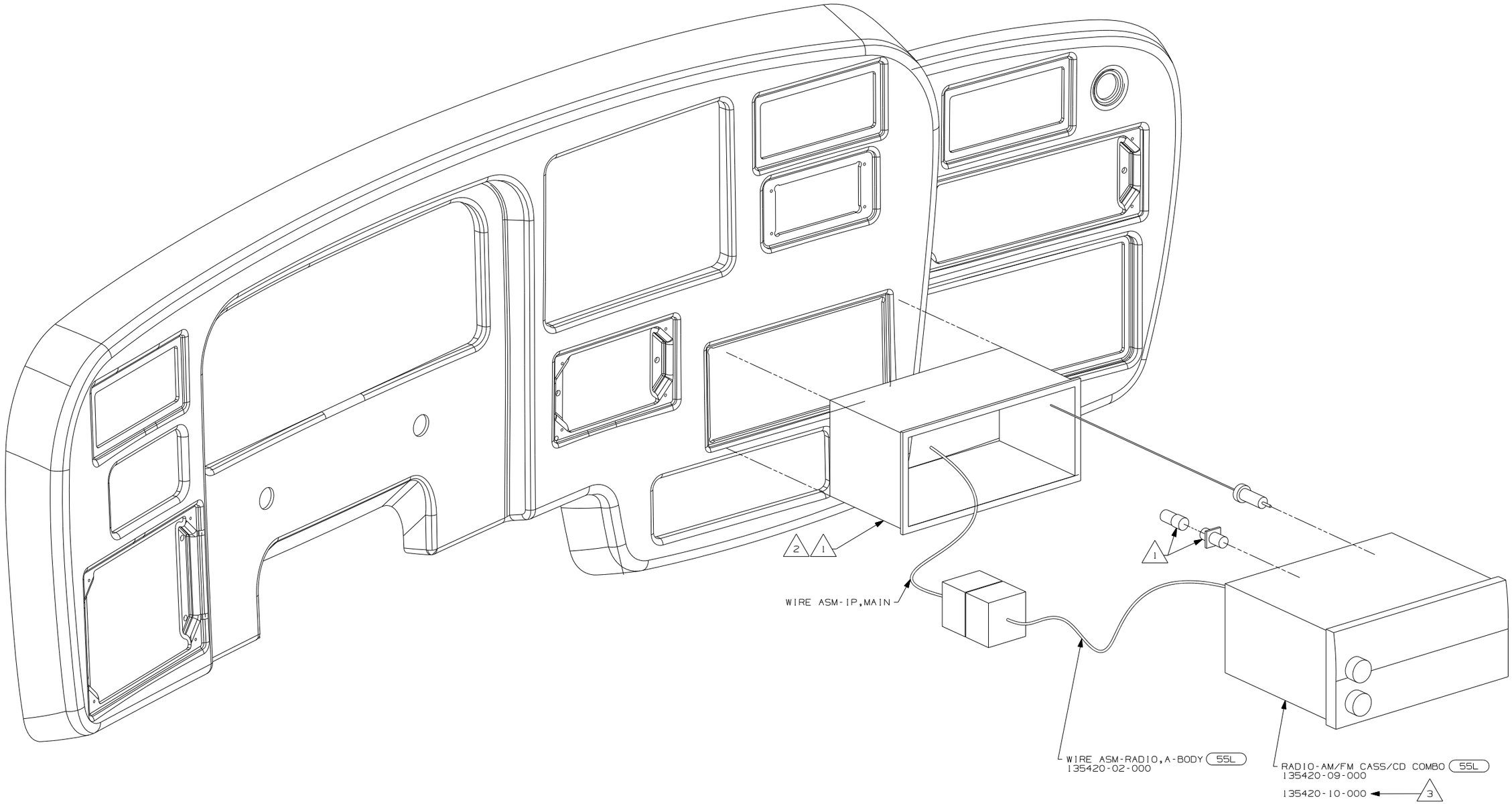

52T CD CHANGER-10 DISC

55L RADIO-AM/FM CASSETTE/CD

F & G SERIES

3 TO BE SUPPLIED IN WINNEBAGOS OWNERS CASE

2 BEND TABS ON ALL 4 SIDES TO SECURE MOUNTING BRACKET TO DASH OPENING.

1 SUPPLIED WITH MOUNTING KIT 135420-07-000.

NOTES:

FIRST USED	04 MOTORHOMES
	DO NOT SCALE DRAWING
TITLE:	RADIO INSTL
SHEET 4	PART NO 145057

DWG NO 145057

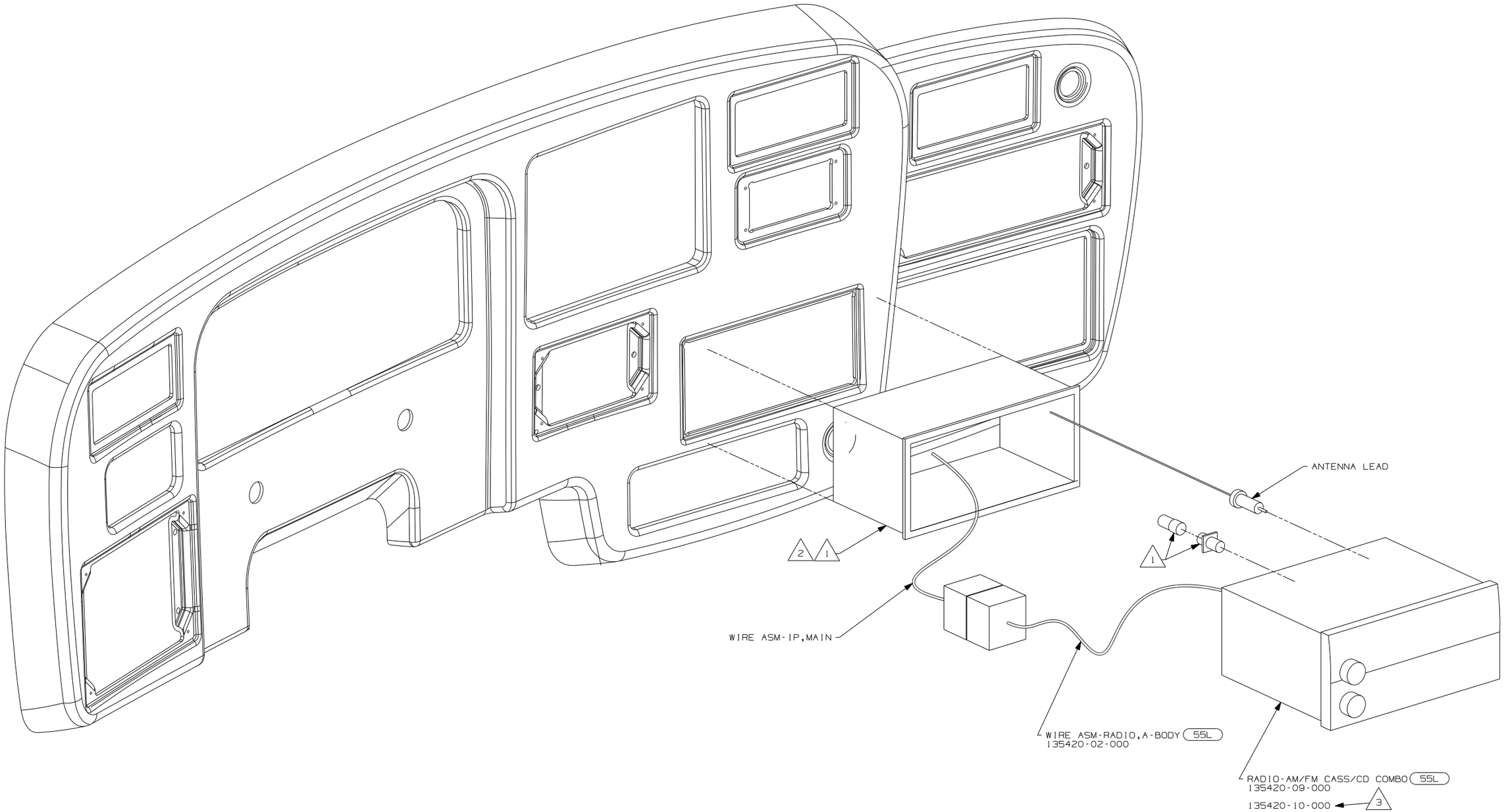

52T CD CHANGER-10 DISC

55L RADIO-AM/FM CASSETTE/CD

L SERIES

3 TO BE SUPPLIED IN WINNEBAGOS OWNERS CASE

2 BEND TABS ON ALL 4 SIDES TO SECURE MOUNTING BRACKET TO DASH OPENING.

1 SUPPLIED WITH MOUNTING KIT 135420-07-000.

NOTES:

FIRST USED 04 MOTORHOMES	
DO NOT SCALE DRAWING	
TITLE: RADIO INSTL	
SHEET 5	PART NO 145057

DWG NO 145057

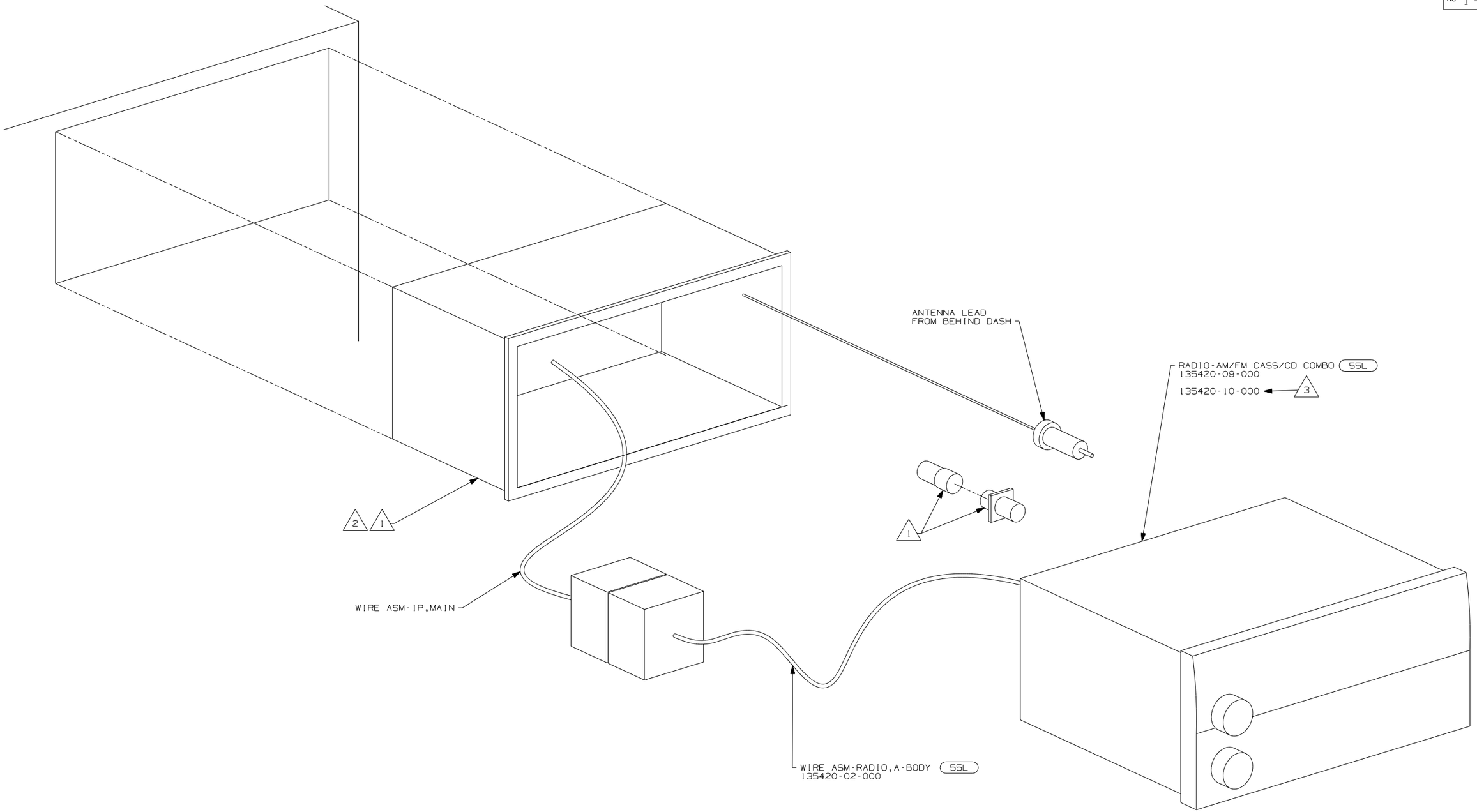

52T CD CHANGER-10 DISC

55L RADIO-AM/FM CASSETTE/CD

P SERIES

NOTES:

3. TO BE SUPPLIED IN WINNEBAGOS OWNERS CASE
2. BEND TABS ON ALL 4 SIDES TO SECURE MOUNTING BRACKET TO DASH OPENING.
1. SUPPLIED WITH MOUNTING KIT 135420-07-000.

FIRST USED	04 MOTORHOMES
	DO NOT SCALE DRAWING
TITLE:	RADIO INSTL
SHEET 6	PART NO 145057

DWG NO 145057

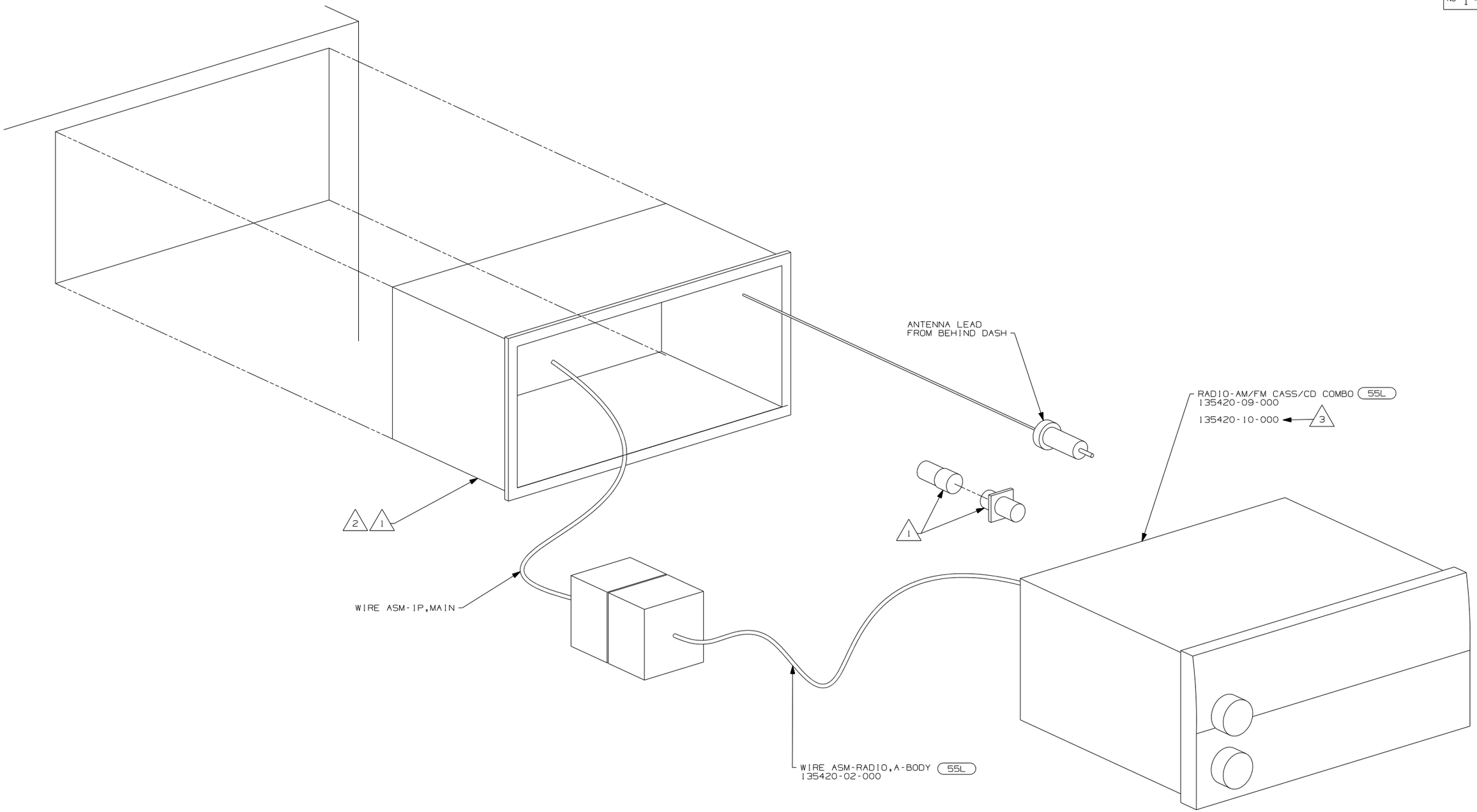

52T CD CHANGER-10 DISC

55L RADIO-AM/FM CASSETTE/CD

S SERIES

3 TO BE SUPPLIED IN WINNEBAGOS OWNERS CASE

2 BEND TABS ON ALL 4 SIDES TO SECURE MOUNTING BRACKET TO DASH OPENING.

1 SUPPLIED WITH MOUNTING KIT 135420-07-000.

NOTES:

FIRST USED	04 MOTORHOMES
	DO NOT SCALE DRAWING
TITLE:	RADIO INSTL
SHEET 7	PART NO 145057

DWG NO 145057

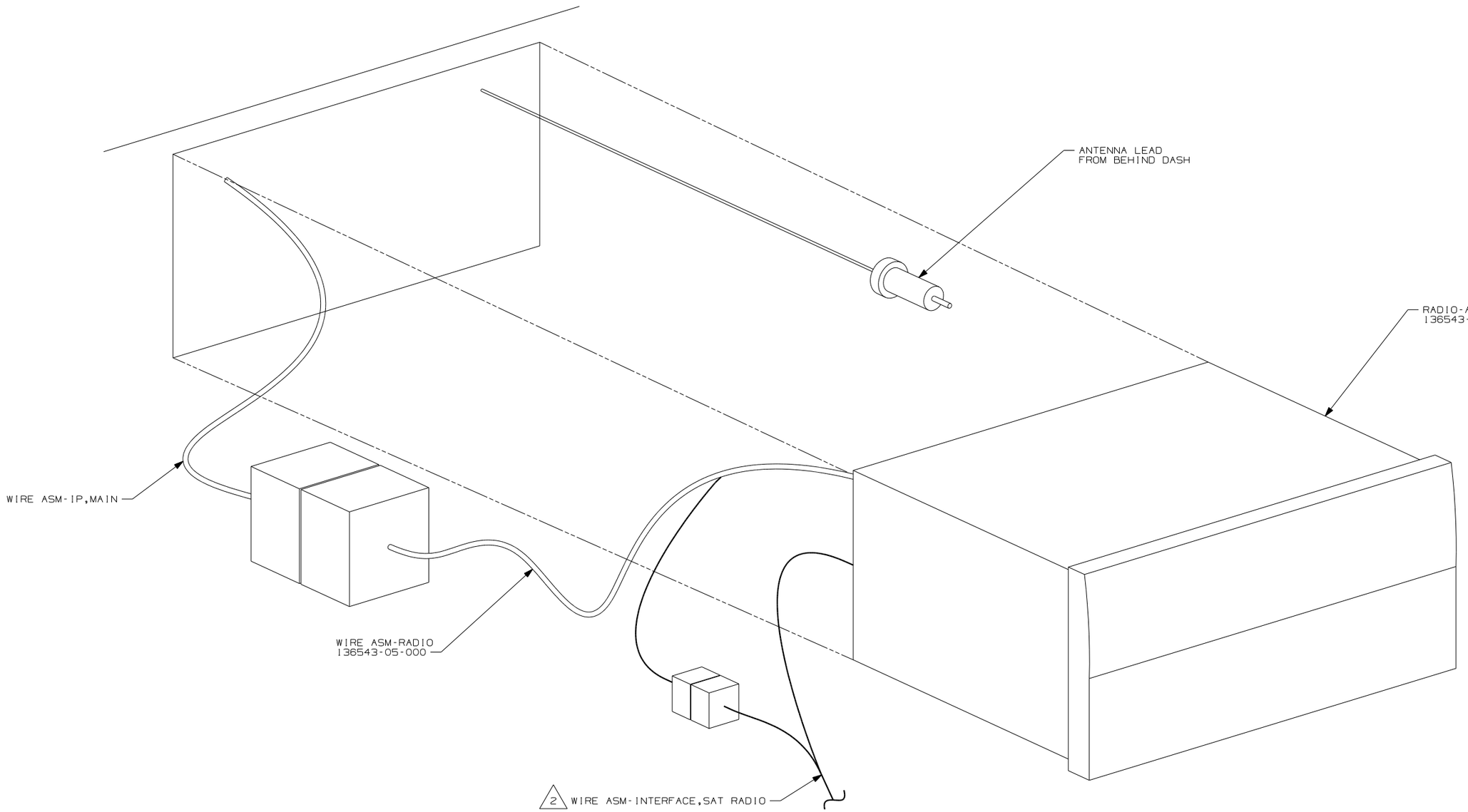

70C RADIO - SATELLITE

19V RADIO-AM/FM STEREO CD PLAYER

Q SERIES

NOTES:

2 TO SATELLITE RECEIVER. SEE WIRING INSTL-FRONT END FOR ADDITIONAL INFORMATION.

1 SLIDE RADIO IN DASH OPENING ENGAGING T-RAIL ON BOTTOM OF RADIO UNTIL LOCKED IN PLACE.

FIRST USED	04 MOTORHOMES
	DO NOT SCALE DRAWING
TITLE:	RADIO INSTL
SHEET 8	PART NO 145057

DRAWING NO.	
144812-01	WIN
144812-02	ITA

RELEASE	REV A	DATE	DWG NO 144812

REV	ZONE	REVISION RECORD	DATE	DFTR-ORIG

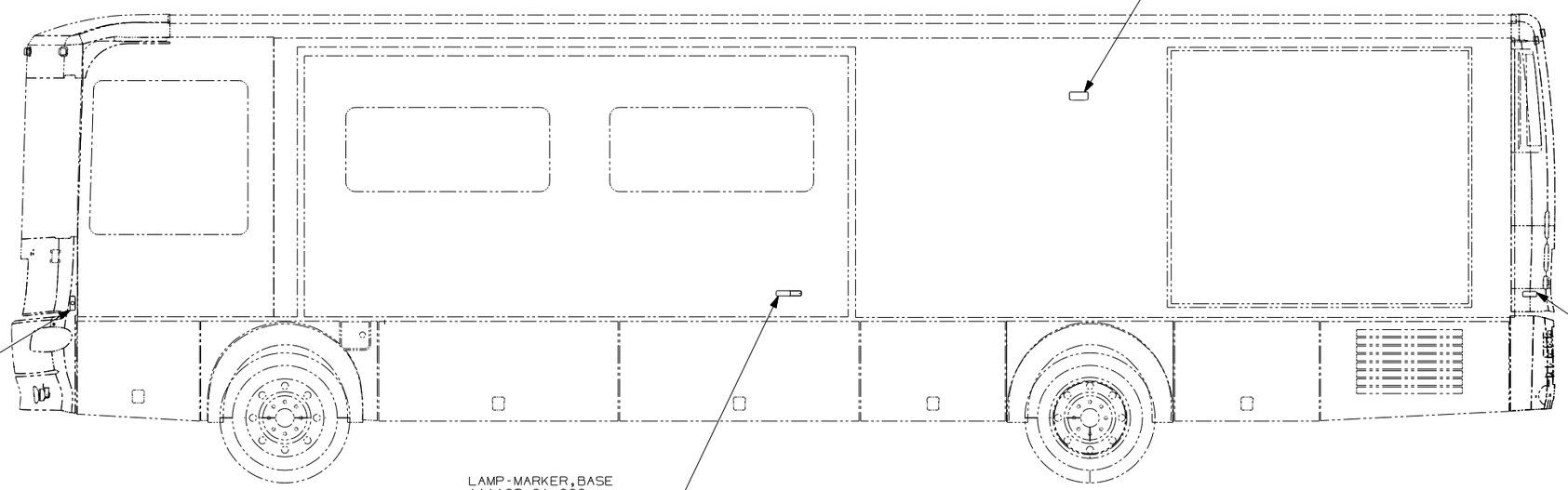

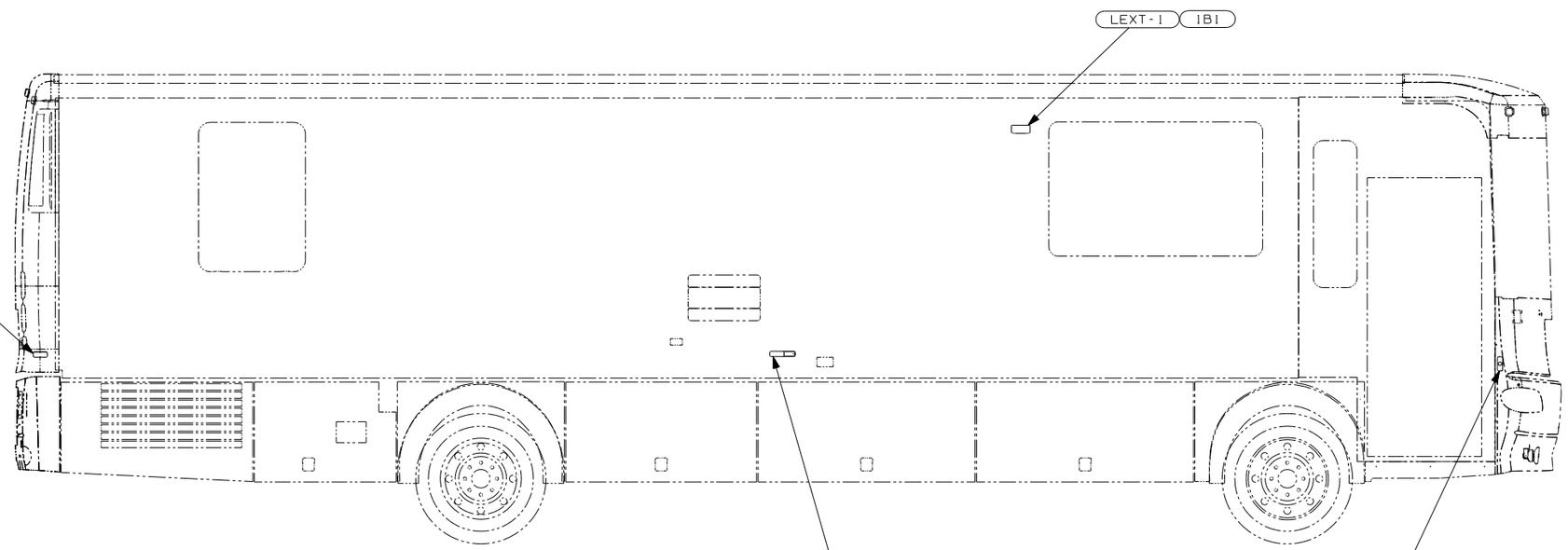

265 CODES/STANDARDS-CSA/CMVSS

IB1 CODES/STANDARDS USA

IB1 265

WINNEBAGO INDUSTRIES

COPYRIGHT 2004
WINNEBAGO
INDUSTRIES, INC.

DFTR	ORIG. DATE
CHKR	ALL DIMENSIONS ARE IN MILLIMETERS
P.E.	
M.E.	FIRST USED
DSNR	04 P-SERIES

UNSPECIFIED TOLERANCES ARE:		
WHOLE DIM (X)	:	1
ONE-PLACE (X.X)	:	1.5
TWO-PLACE (X.XX)	:	0.50
ANGLE	:	1°

THIRD ANGLE PROJECTION

MATERIAL:

DO NOT SCALE DRAWING

TITLE: WIRING INSTL-EXTERIOR LAMPS

SHEET 1 OF 2 | PART NO 144812

FOR ELECTRICAL TORQUE SPECIFICATIONS SEE DWG NO. 128783-01-000

(X-X) FOR ELECTRICAL CALLOUTS SEE DWG NO. 121339-01-000

DWG NO 144812

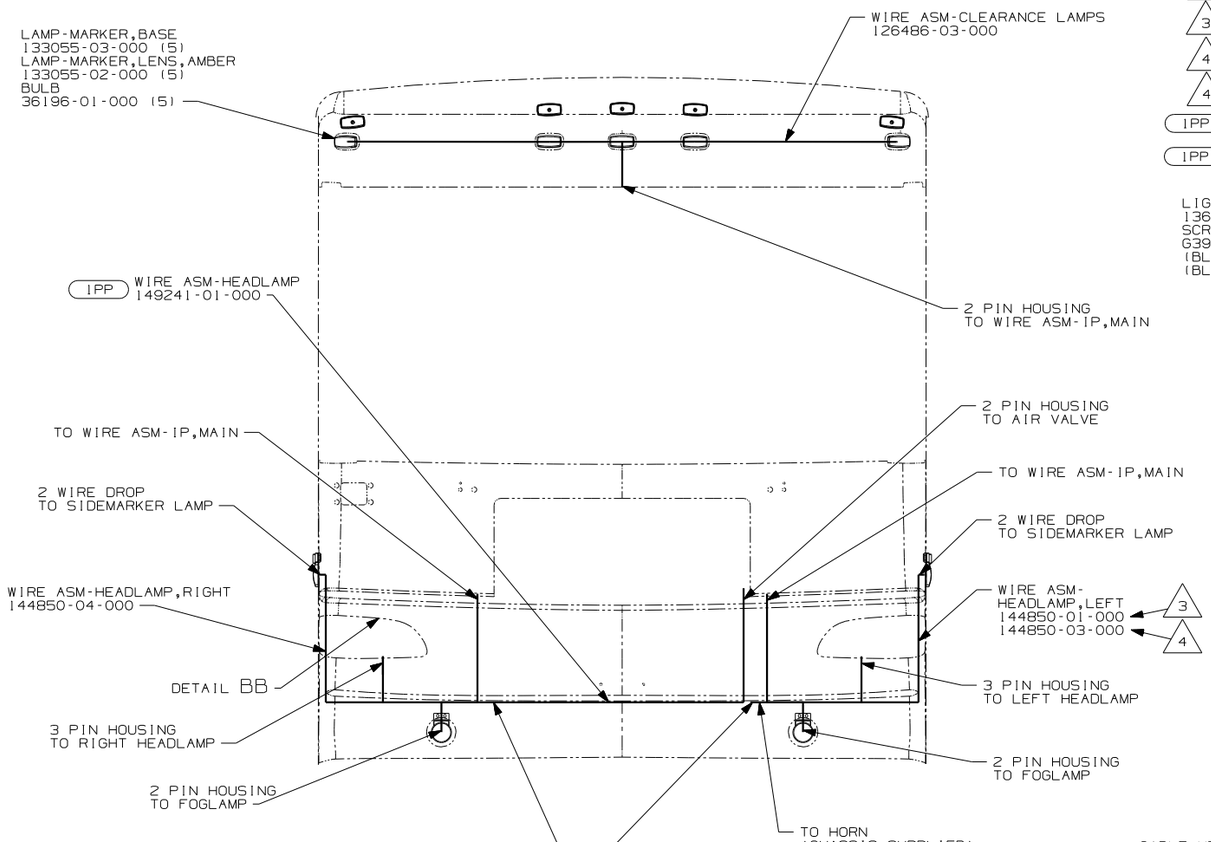

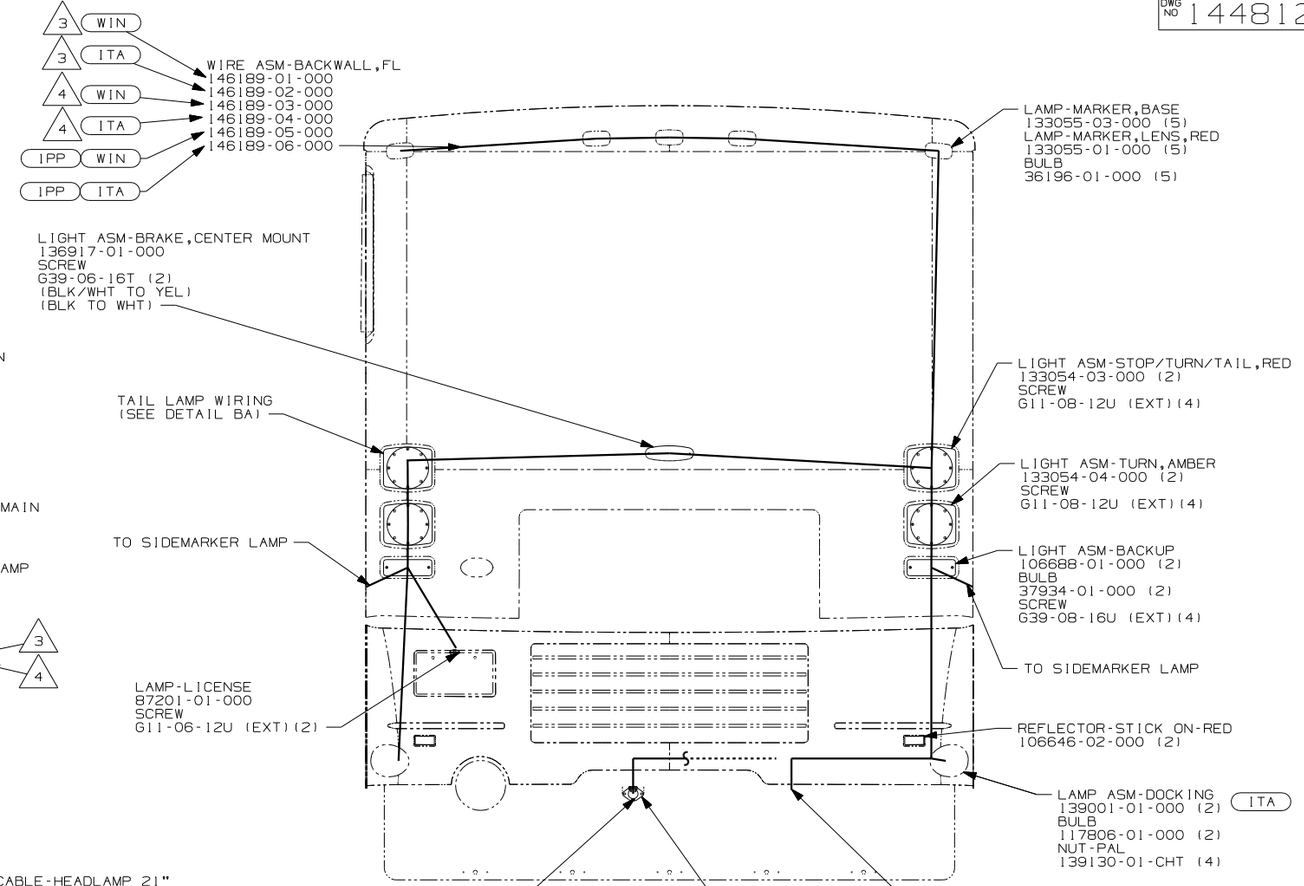

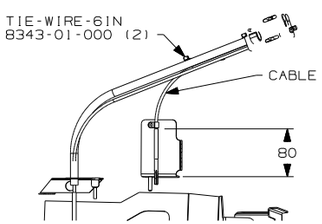

DETAIL BB
2 PLACES

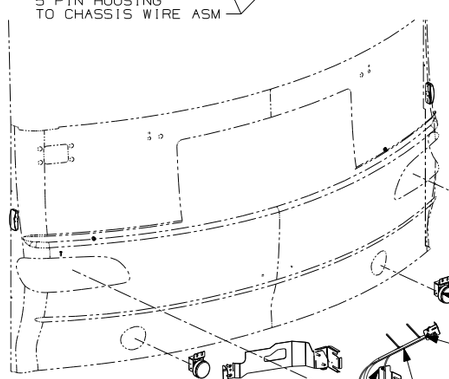

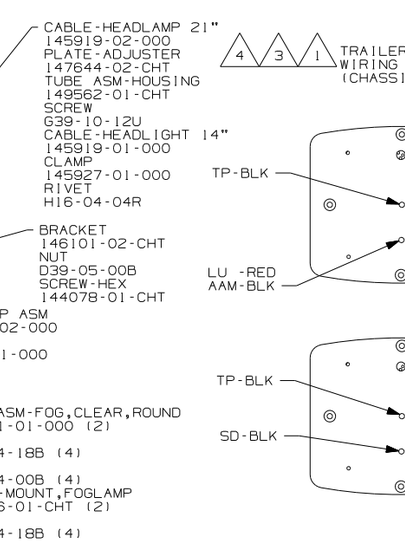

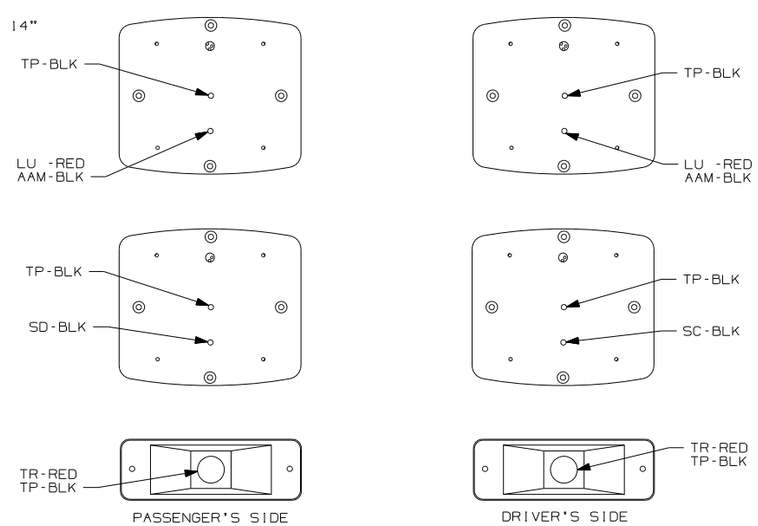

DETAIL BA
(SHOWN FROM REAR SIDE)

IFS FRTL 330HP 7.2L 6SPD AL WHLS
IFB FRTL 300HP 5.9L 6SPD AL WHLS
IFA FRTL 27,910 300 5.9L 5-SP
IPP WORKHORSE29,500 330 8.3L 6SP
WIN WINNEBAGO ONLY
ITA ITASCA ONLY
240 TRAILER HITCH

4 MMDC WIRING (IFA OR IFB OR IFS).

3 SYSTEM 3 WIRING (IFA OR IFB OR IFS).

2 LAMP TO BE ASSEMBLED TO BRACKET PRIOR TO ITS ATTACHMENT TO THE FRONT END.

1 CONNECTOR-PLUG,TRAILER (146246-01-000) TO BE SUPPLIED IN COACH.

NOTES:

FOR ELECTRICAL TORQUE SPECIFICATIONS SEE DWG NO. 128783-01-000

X-X FOR ELECTRICAL CALLOUTS SEE DWG NO. 121339-01-000

FIRST USED 04 P-SERIES

DO NOT SCALE DRAWING

TITLE: WIRING INSTL-EXTERIOR LAMPS

SHEET 2 PART NO 144812

DRAWING NO.	FEATURE
144979-01	WIN
144979-02	ITA

RELEASE	REV A	DATE	DWG NO 144979
REV	ZONE	REVISION RECORD	DATE / DFTR-ORIG

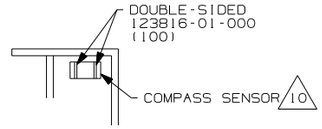

VIEW AB

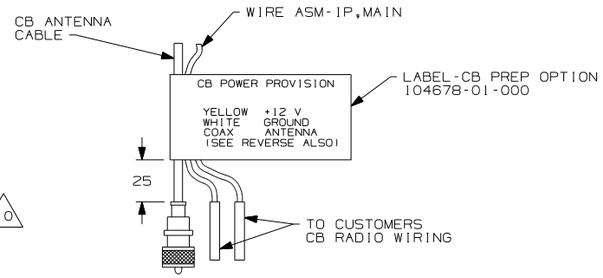

DETAIL AC

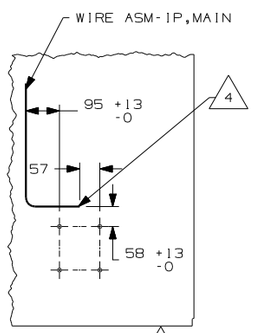

VIEW AA 12 64J 640

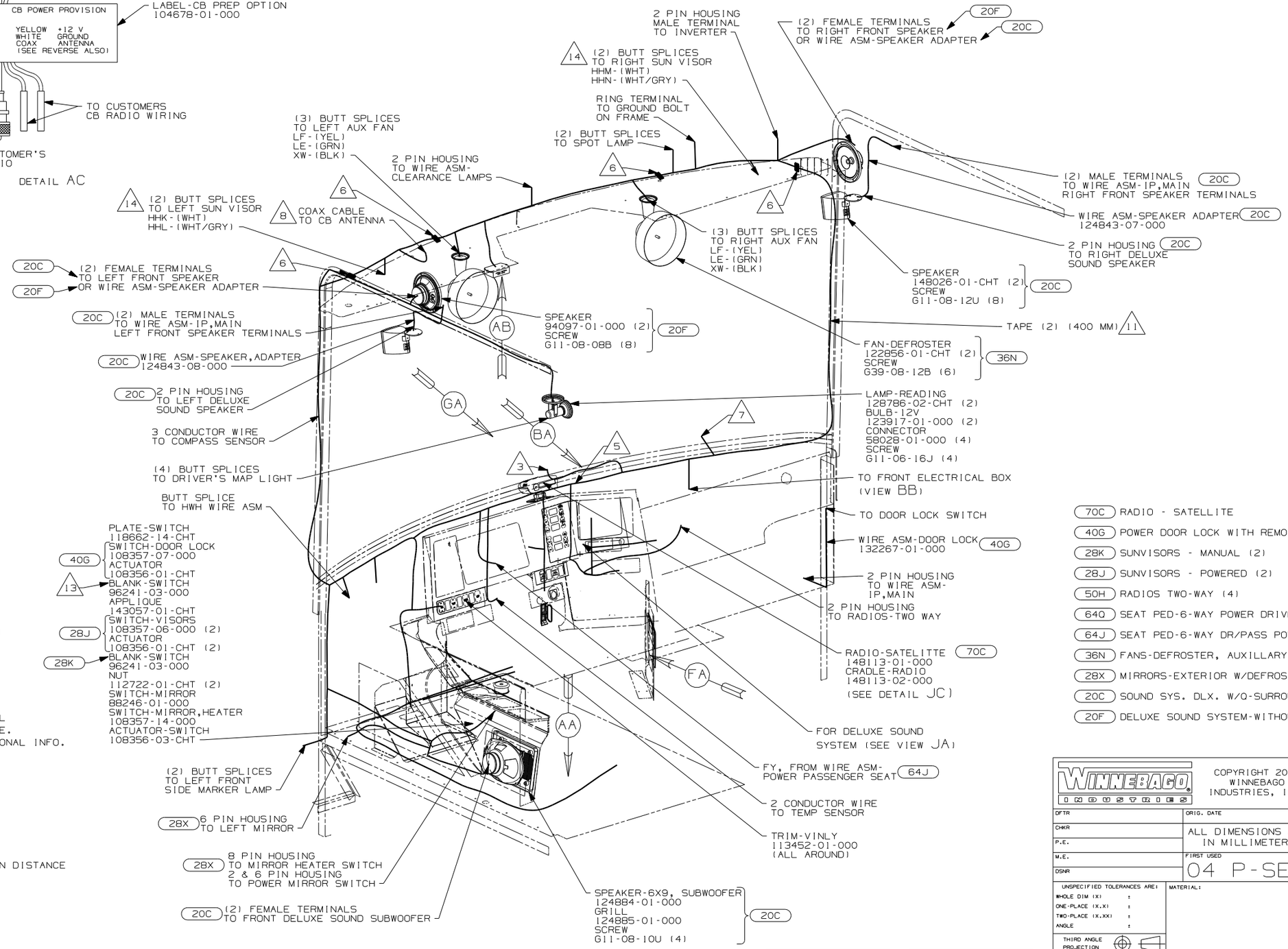

14 CUT VISOR WIRING TO 300MM BEFORE CONNECTING.

13 WITHOUT 40G .

12 WITHOUT 64J OR 640 , COIL WIRE AND TIE BACK WITH MAIN LOOM.

11 USE TAPE 136748-01-000 TO SECURE WIRES IN A-POST.

10 MOUNT SENSOR WITH DOUBLE SIDED TAPE IN BOTTOM OF FRONT OVHD SO THAT SENSOR FACES FORWARD AS STATED ON SENSOR LABEL.

9. REPLACE FLASHER WITH 7093-01 (2 EA).

8 SEE ANTENNA INSTL-CB.

7 ROUTE WASHER BOTTLE WIRE TOGETHER WITH HEATER CONTROL WIRES THROUGH HOLE IN STEEL ABOVE AND RIGHT OF ENGINE. USE GROMMET 23942-01-000. SEE SHT 14 & 15 FOR ADDITIONAL INFO.

6 USE TIE WIRE MOUNT 92901-01-000 AND TIE-WIRE 93147-01-000 TO SECURE WIRE ASM-IP,MAIN.

5 USE TAPE 8363-01-000 TO SECURE WIRE ASM-IP,MAIN CHASSIS SUPPLIED WIRE ASM-IP, CRUISE WIRING AND HEATER A/C WIRES TOGETHER EVERY 300 IN THIS AREA AFTER ROUTING AND MAKING ALL CONNECTIONS.

4 WIRE ASM MAY BE ROUTED ON EITHER SIDE OF HOLE PATTERN DISTANCE SHOWN AT END POINT OF PATH. LEAVE 675± 50MM OF WIRE.

3 ROUTE WIPER MOTOR WIRING THROUGH HOLE IN BULKHEAD ABOVE & LEFT OF ENGINE. USE GROMMET 88756-01-000. SEE SHT 14 & 15 FOR ADDITIONAL INFORMATION.

2. USE SEAL-TRIM 113452-01-000 TO PROTECT WIRES FROM SHARP EDGES.

1. FOR ADDITIONAL INFORMATION SEE WIRING INSTL-CHASSIS.

NOTES:

70C RADIO - SATELLITE
40G POWER DOOR LOCK WITH REMOTE
28K SUNVISORS - MANUAL (2)
28J SUNVISORS - POWERED (2)
50H RADIOS TWO-WAY (4)
64Q SEAT PED-6-WAY POWER DRIVER
64J SEAT PED-6-WAY DR/PASS POWER
36N FANS-DEFROSTER, AUXILLARY
28X MIRRORS-EXTERIOR W/DEFROST
20C SOUND SYS. DLX. W/Q-SURROUND
20F DELUXE SOUND SYSTEM-WITHOUT

FOR ELECTRICAL TORQUE SPECIFICATIONS SEE DWG NO. 128783-01-000

X-X FOR ELECTRICAL CALLOUTS SEE DWG NO. 121339-01-000

WINNEBAGO INDUSTRIES

COPYRIGHT 2004 WINNEBAGO INDUSTRIES, INC.

DFTR | ORIG. DATE
CHKR | ALL DIMENSIONS ARE IN MILLIMETERS
P.E.
M.E. | FIRST USED 04 P-SER
DSNR

UNSPECIFIED TOLERANCES ARE:
WHOLE DIM (X) ±
ONE-PLACE (X.X) ±
TWO-PLACE (X.XX) ±
ANGLE ±

MATERIAL:

THIRD ANGLE PROJECTION

DO NOT SCALE DRAWING

TITLE: WIRING INSTL-FRONT END

SHEET 1 OF 10 | PART NO 144979

DWG NO 144979

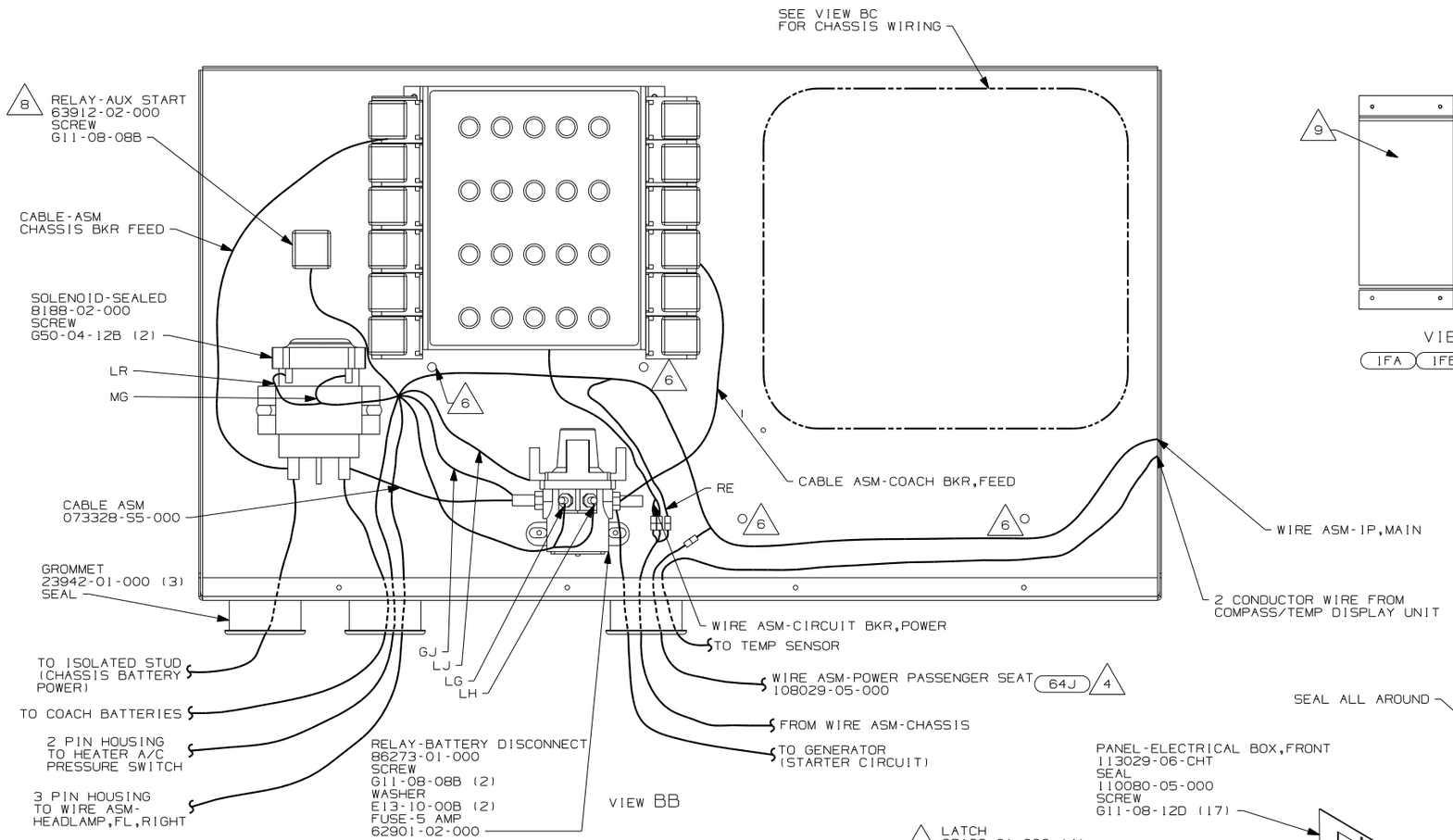

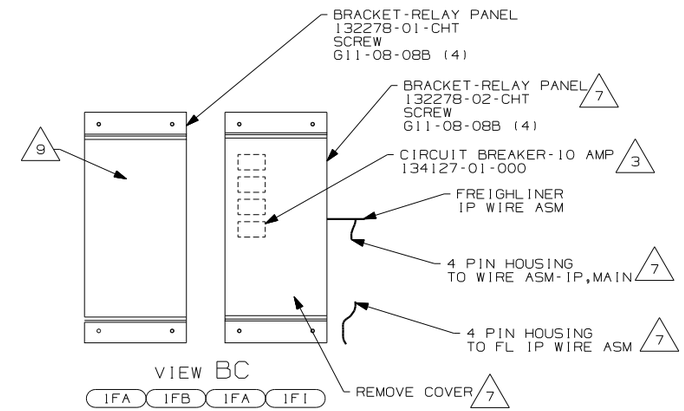

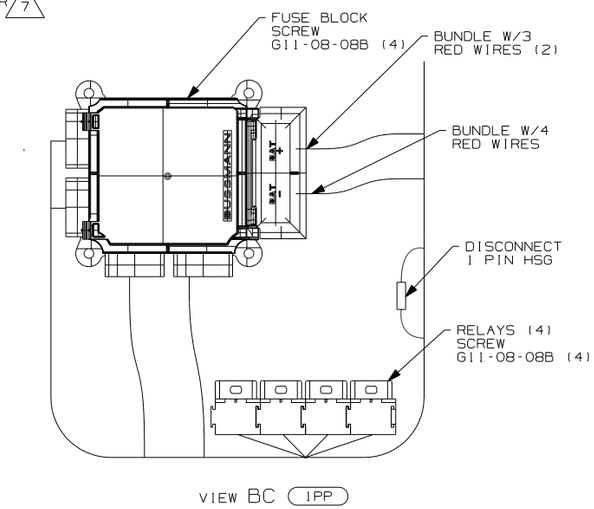

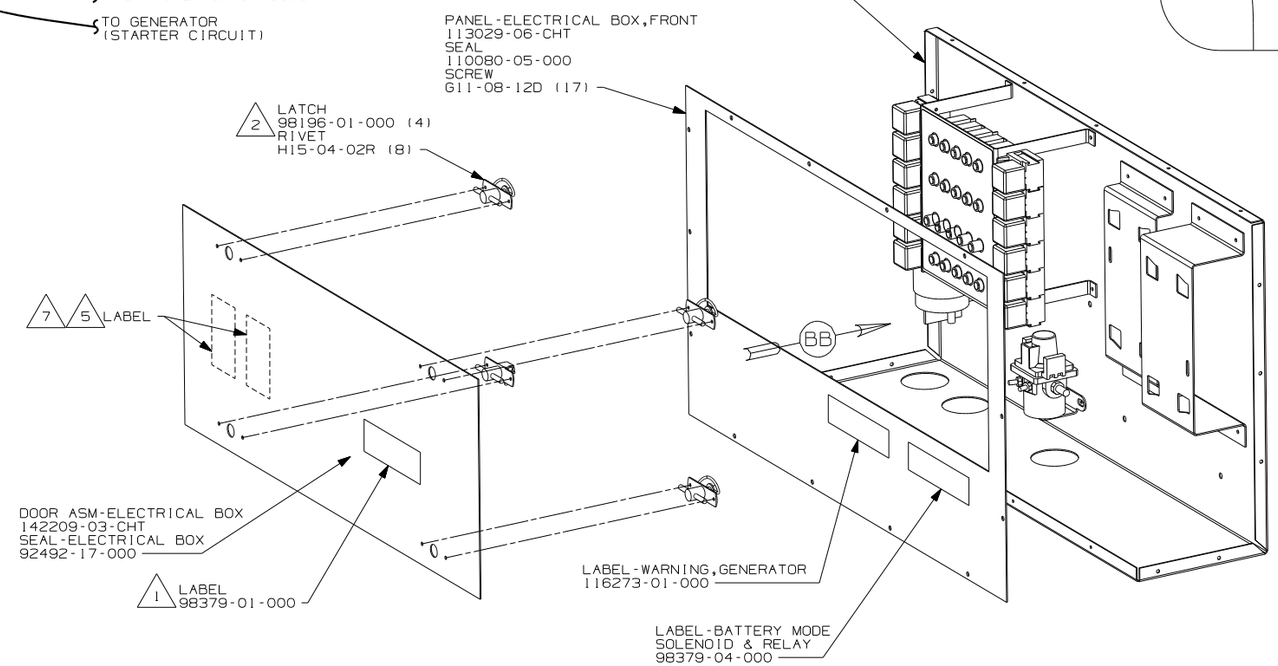

9 DO NOT REMOVE CHASSIS SUPPLIED FUSE PANEL COVER WITH MMDC WIRING.

8 MMDC WIRING

7 SYSTEM 3 WIRING

6 USE TIE-WIRE 8343-02-000 (4)
TIE-WIRE,MOUNT, 92909-01-000 (4)

5 CHASSIS SUPPLIED.

4 COIL WIRE ASM UP OUTSIDE ELECTRICAL BOX.
TO BE ROUTED WITH WIRE ASM-CHASSIS.

3 REMOVE 10 AMP FUSE AND REPLACE WITH NOTED BREAKER.

2 MOUNT LATCHES WITH TABS TOWARD CENTER OF DOOR.

1 TRIM LABEL AS NECESSARY.

NOTES:

640 SEAT PED-6-WAY POWER DRIVER
64J SEAT PED-6-WAY DR/PASS POWER
1PP WORKHORSE29,500 330 8.3L 6SP
1FI FRTL 27,910 350HP 7.2L 6SPD
1FS FRTL 330HP 7.2L 6SPD AL WHLS
1FB FRTL 300HP 5.9L 6SPD AL WHLS
1FA FRTL 27,910 300 5.9L 5-SP

FOR ELECTRICAL TORQUE SPECIFICATIONS SEE DWG NO. 128783-01-000

X-X FOR ELECTRICAL CALLOUTS SEE DWG NO. 121339-01-000

FIRST USED 04 P-SER

DO NOT SCALE DRAWING

TITLE: WIRING INSTL-FRONT END

SHEET 2 PART NO 144979

DWG NO 144979

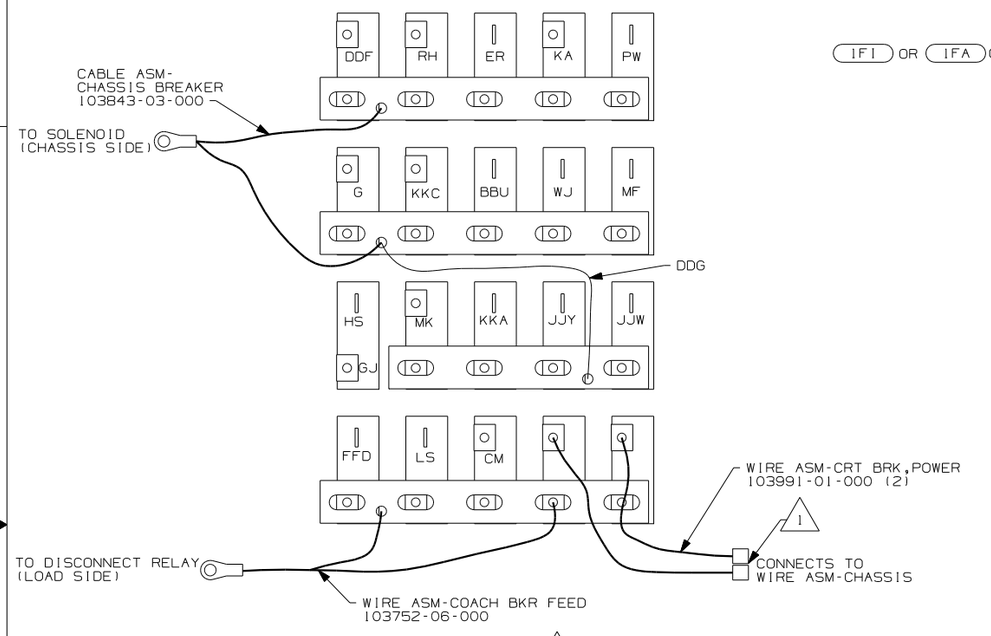

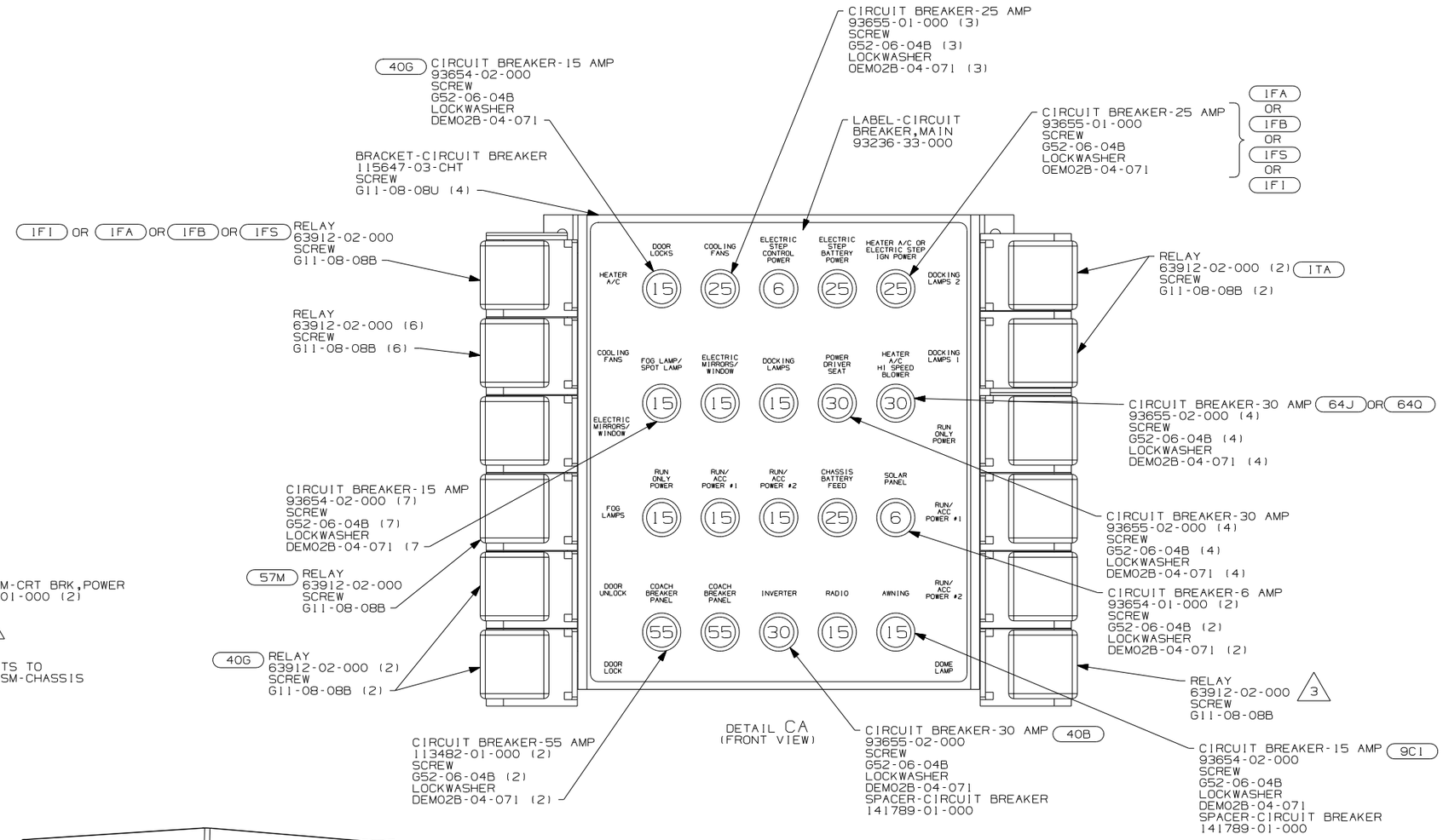

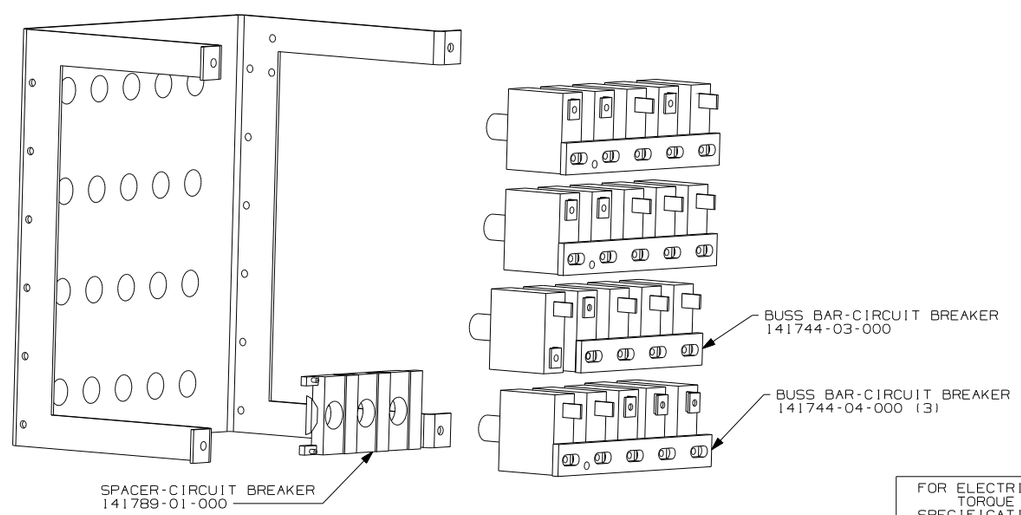

IFI	FRTL 27,910 350HP 7.2L 6SPD
IFS	FRTL 330HP 7.2L 6SPD AL WHLS
IFB	FRTL 300HP 5.9L 6SPD AL WHLS
IFA	FRTL 27,910 300 5.9L 5-SP
40G	POWER DOOR LOCK WITH REMOTE
ITA	ITASCA ONLY
63F	AWNING-ENTRANCE DOOR
9C1	AWNING-ELECTRIC PACKAGE
64J	SEAT PED-6-WAY DR/PASS POWER
64Q	SEAT PED-6-WAY POWER DRIVER
57M	LAMPS-FOG
40B	INVERTER-DC/AC, 300 WATT
28X	MIRRORS-EXTERIOR W/DEFROST

3 MMDC WIRING

2 CIRCUITS LABELED ON BREAKER ARE FROM WIRE ASM-IP,MAIN UNLESS OTHERWISE NOTED.

1 CONNECT HOUSINGS TOGETHER.

NOTES:

FOR ELECTRICAL TORQUE SPECIFICATIONS SEE DWG NO. 128783-01-000

X-X FOR ELECTRICAL CALLOUTS SEE DWG NO. 121339-01-000

FIRST USED 04 P-SER

DO NOT SCALE DRAWING

TITLE: WIRING INSTL-FRONT END

SHEET 3 PART NO 144979

DWG NO 144979

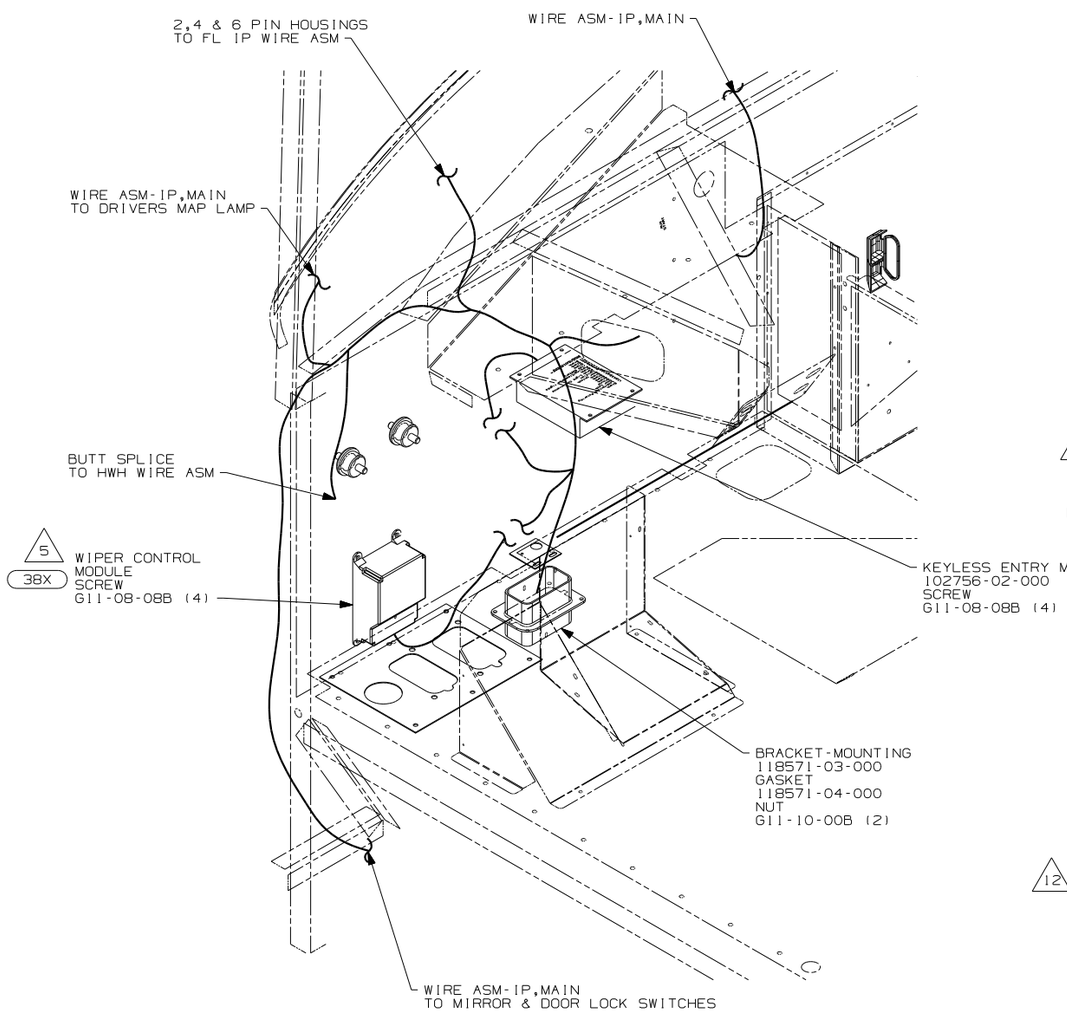

VIEW DA
(WINNEBAGO WIRING SHOWN)

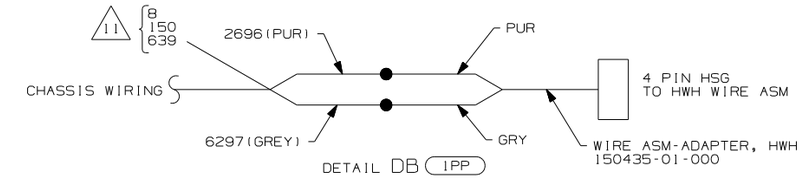

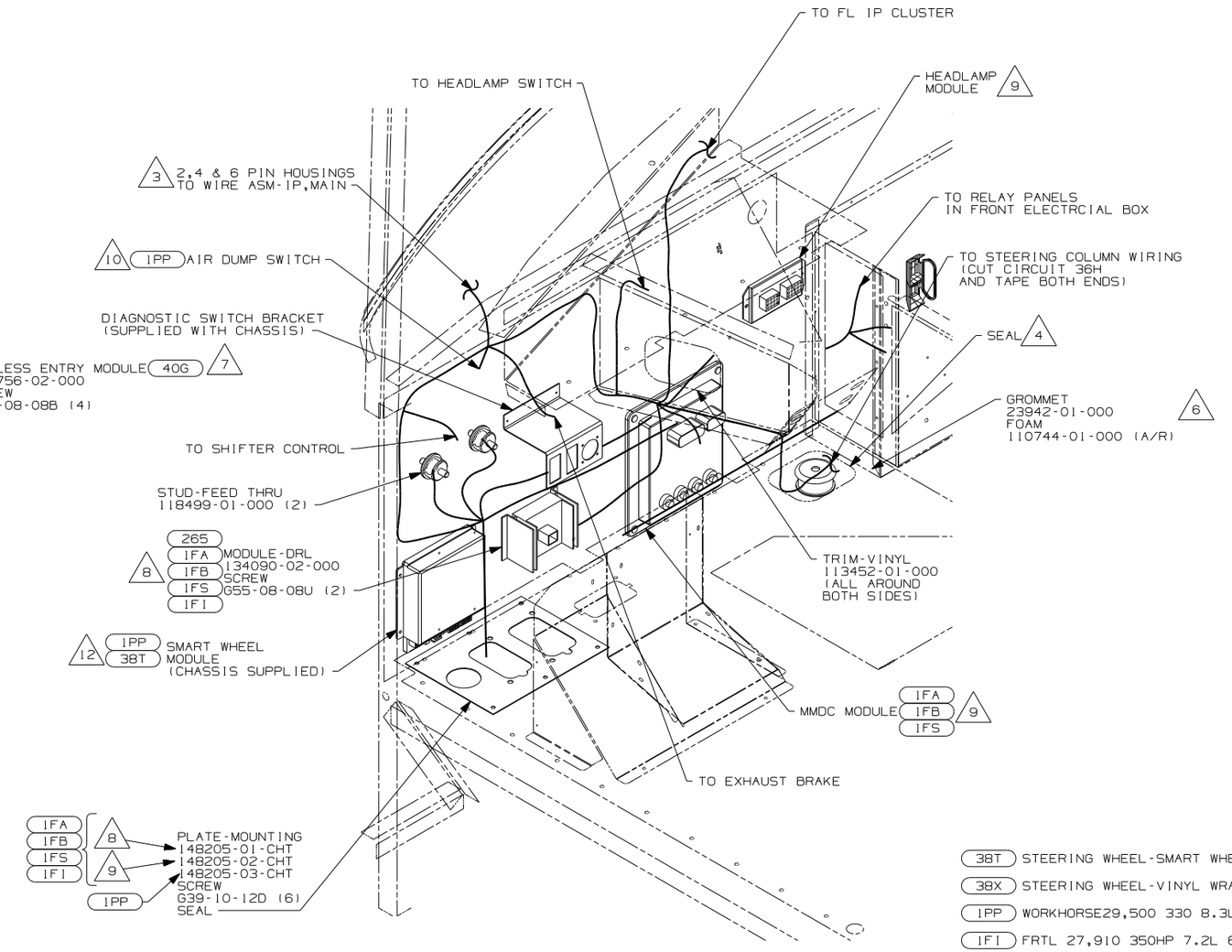

VIEW DA 2
(CHASSIS WIRING SHOWN)

9 MMDC WIRING

8 SYSTEM 3 WIRING

7 MOUNT TO PLENUM PANEL AS SHOWN.

6 PUT 1 SEAL IN FRONT OF HOLE AT CAB PREP.

5 SEE WIPER CONTROL INFORMATION FOR INSTALLATION INSTRUCTION.

4 ROUTE PARK BRAKE VALVE AND AIR LINES FOR DASH GAUGES THRU HERE. COVER WITH CONVOLUTE TUBING 41953 WHERE VISIBLE.

3 DO NOT USE SEAT BELT 2 PIN HOUSING.

2 FL IP WIRE ASM SHOULD BE TIED PRIOR TO INSTALLATION. SEE DETAIL HA FOR TYING INSTRUCTIONS.

1. BUNDLE AND SECURE ALL EXCESS WIRE.

12 CONNECT RED WIRE TO J5 & YELLOW WIRE TO J6.

11 TAPE EACH CIRCUIT INDIVIDUALLY & TAPE BACK INTO LOOM WITH TAPE 8363-01-000.

10 CUT TERMINALS & HSG FROM WORKHORSE SUPPLIED AIR DUMP SWITCH AND RECONNECT AS SHOWN IN DETAIL DB.

NOTES:

38T STEERING WHEEL-SMART WHEEL
38X STEERING WHEEL-VINYL WRAPPED
1PP WORKHORSE29,500 330 8.3L 6SP
1FI FRTL 27,910 350HP 7.2L 6SPD
1FS FRTL 330HP 7.2L 6SPD AL WHLS
1FB FRTL 300HP 5.9L 6SPD AL WHLS
1FA FRTL 27,910 300 5.9L 5-SP
265 CODES/STANDARDS-CSA/CMVSS

FOR ELECTRICAL TORQUE SPECIFICATIONS SEE DWG NO. 128783-01-000

X-X FOR ELECTRICAL CALLOUTS SEE DWG NO. 121339-01-000

FIRST USED 04 P-SER

DO NOT SCALE DRAWING

TITLE: WIRING INSTL-FRONT END

SHEET 4 PART NO 144979

DWG NO 144979

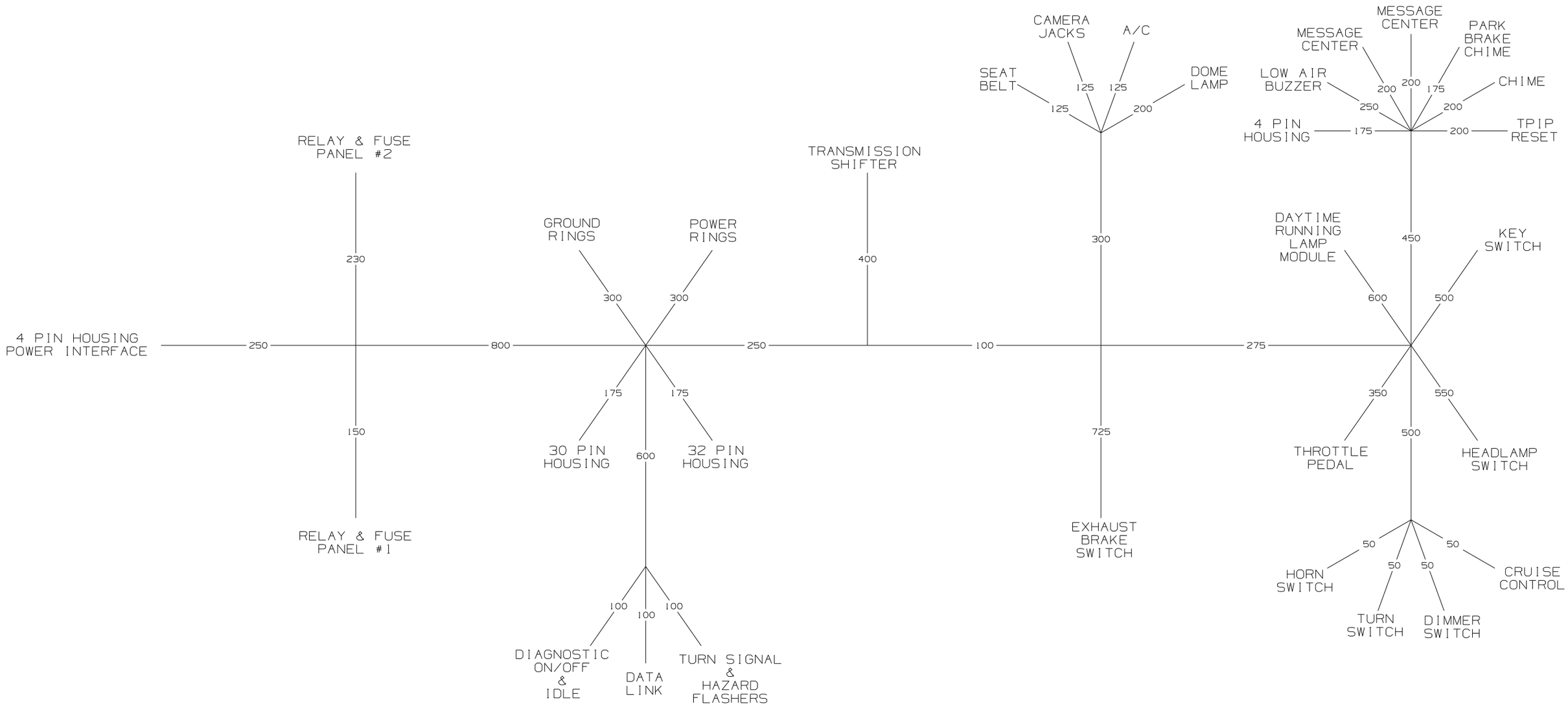

1. USE WIRE TIES TO FORM FREIGHTLINER IP WIRE INTO THIS CONFIGURATION.

NOTES:

FOR ELECTRICAL TORQUE SPECIFICATIONS SEE DWG NO. 128783-01-000

X-X FOR ELECTRICAL CALLOUTS SEE DWG NO. 121339-01-000

SYSTEM 3 WIRING

FIRST USED 04 P-SER

DO NOT SCALE DRAWING

TITLE: WIRING INSTL-FRONT END

SHEET 5 PART NO 144979

DWG NO 144979

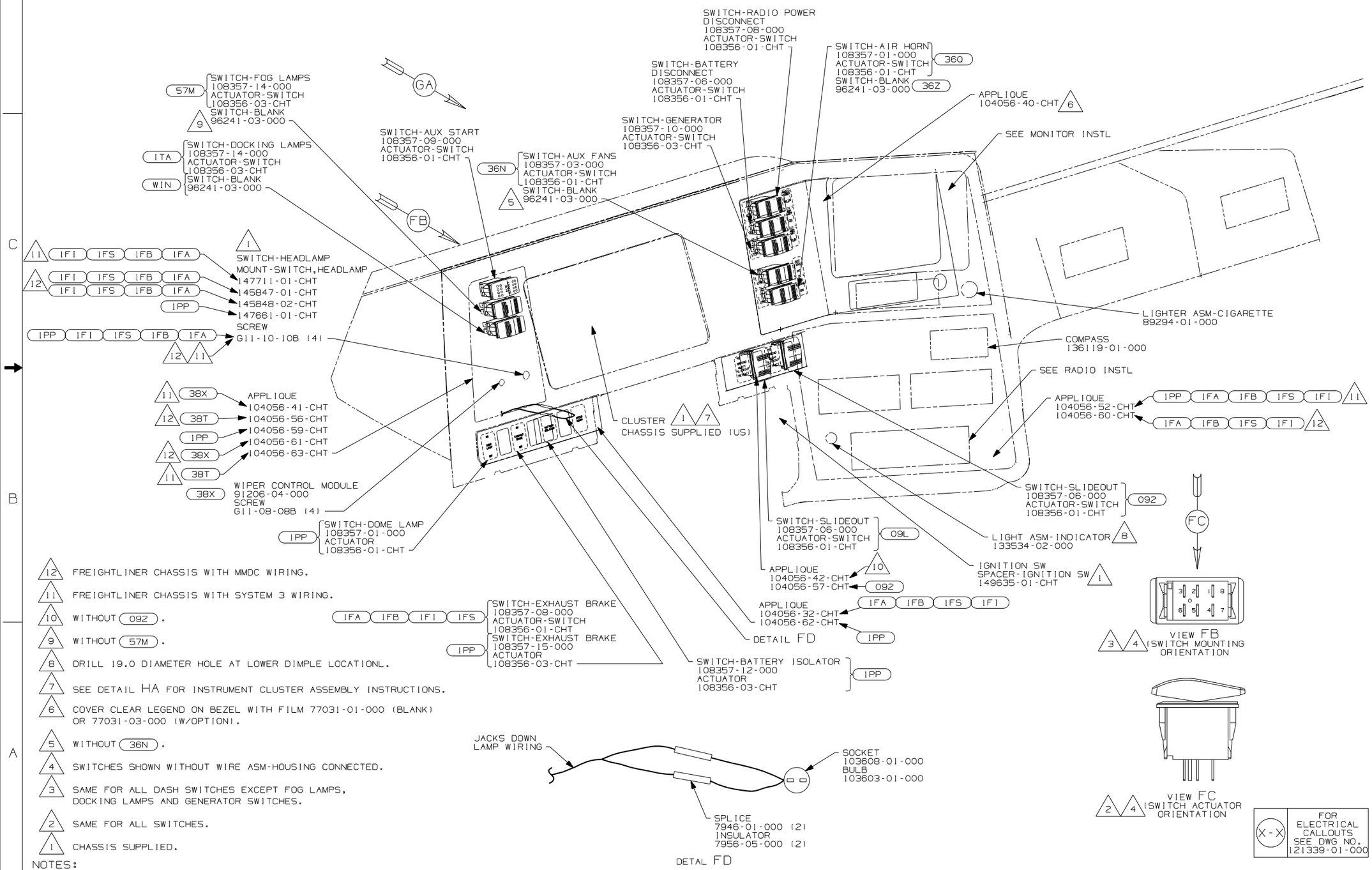

12 FREIGHTLINER CHASSIS WITH MMDC WIRING.

11 FREIGHTLINER CHASSIS WITH SYSTEM 3 WIRING.

10 WITHOUT 092 .

9 WITHOUT 57M .

8 DRILL 19.0 DIAMETER HOLE AT LOWER DIMPLE LOCATIONL.

7 SEE DETAIL HA FOR INSTRUMENT CLUSTER ASSEMBLY INSTRUCTIONS.

6 COVER CLEAR LEGEND ON BEZEL WITH FILM 77031-01-000 (BLANK) OR 77031-03-000 (W/OPTION).

5 WITHOUT 36N .

4 SWITCHES SHOWN WITHOUT WIRE ASM-HOUSING CONNECTED.

3 SAME FOR ALL DASH SWITCHES EXCEPT FOG LAMPS, DOCKING LAMPS AND GENERATOR SWITCHES.

2 SAME FOR ALL SWITCHES.

1 CHASSIS SUPPLIED.

NOTES:

38T STEERING WHEEL-SMART WHEEL
38X STEERING WHEEL-VINYL WRAPPED
1PP WORKHORSE29,500 330 8.3L 6SP
1FS FRTL 330HP 7.2L 6SPD AL WHLS
1FI FRTL 27,910 350HP 7.2L 6SPD
1FB FRTL 300HP 5.9L 6SPD AL WHLS
1FA FRTL 27,910 300 5.9L 5-SP
092 SLIDEOUT ROOM - FRONT RIGHT
09L SLIDEOUT ROOM FRONT LEFT
36Z AIR HORNS - WITHOUT
57M LAMPS-FOG
36Q AIR HORNS-CHROME
36N FANS-DEFROSTER, AUXILIARY

X-X FOR ELECTRICAL CALLOUTS SEE DWG NO. 121339-01-000

FIRST USED 04 P-SER

DO NOT SCALE DRAWING

TITLE: WIRING INSTL-FRONT END

SHEET 6 PART NO 144979

DWG NO 144979

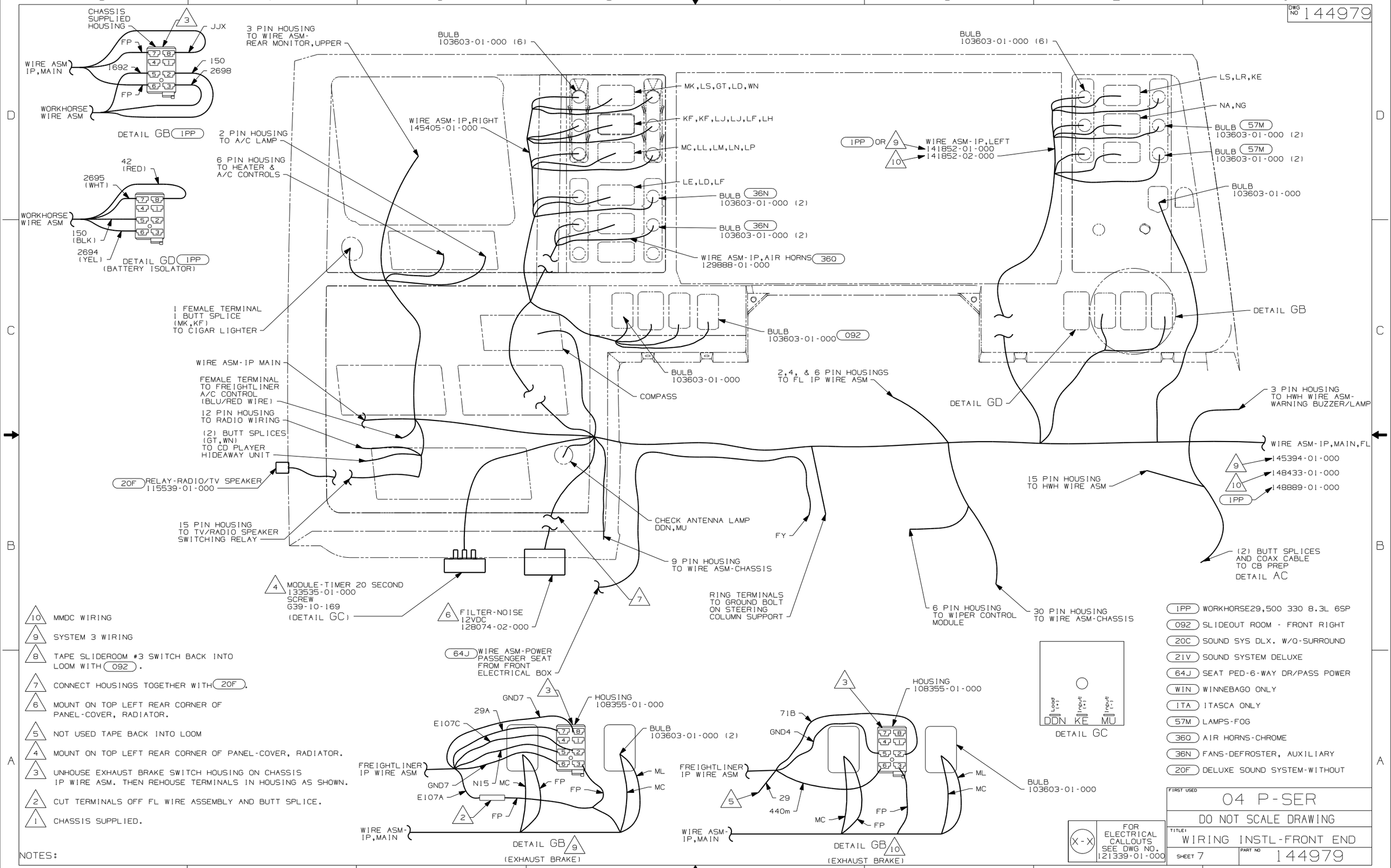

DWG NO 144979

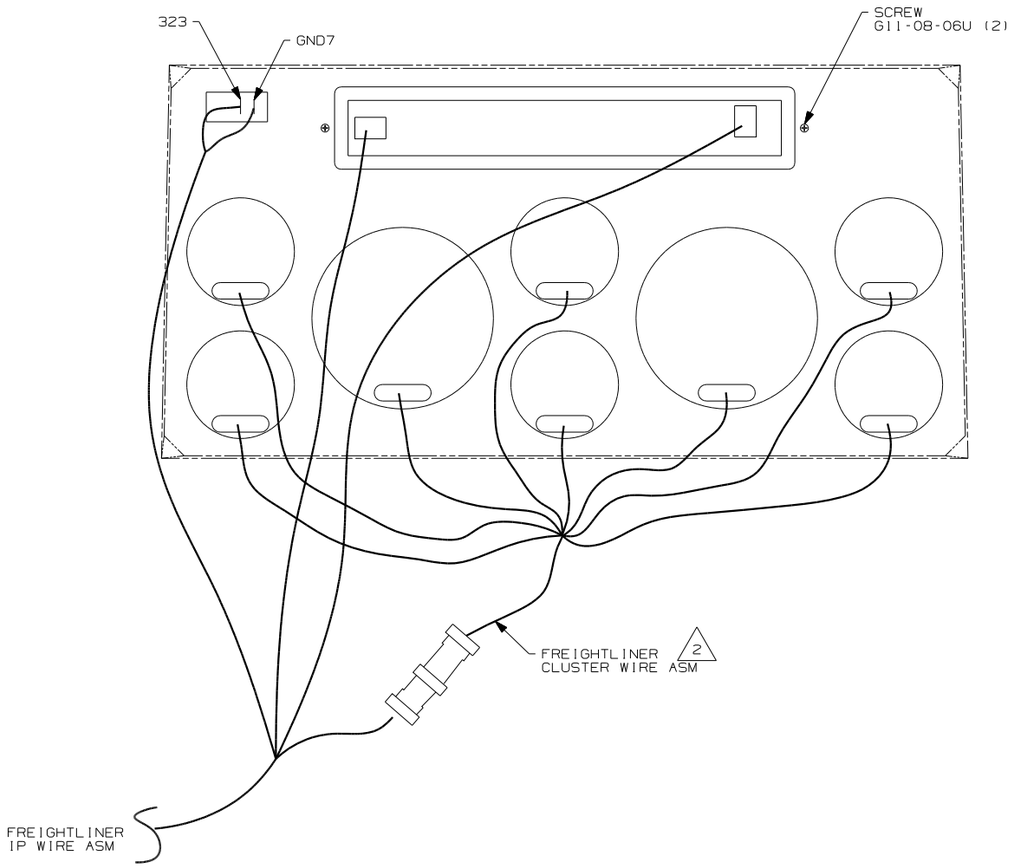

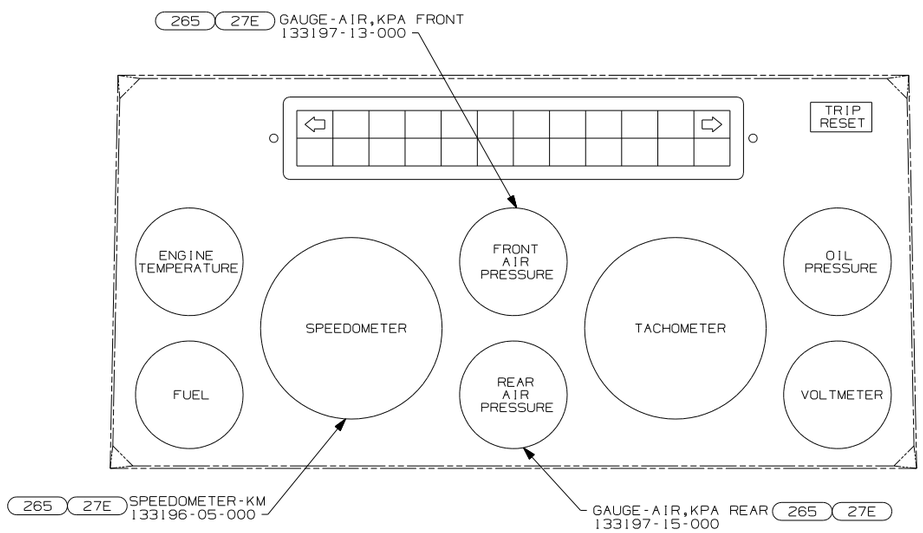

DETAIL HA

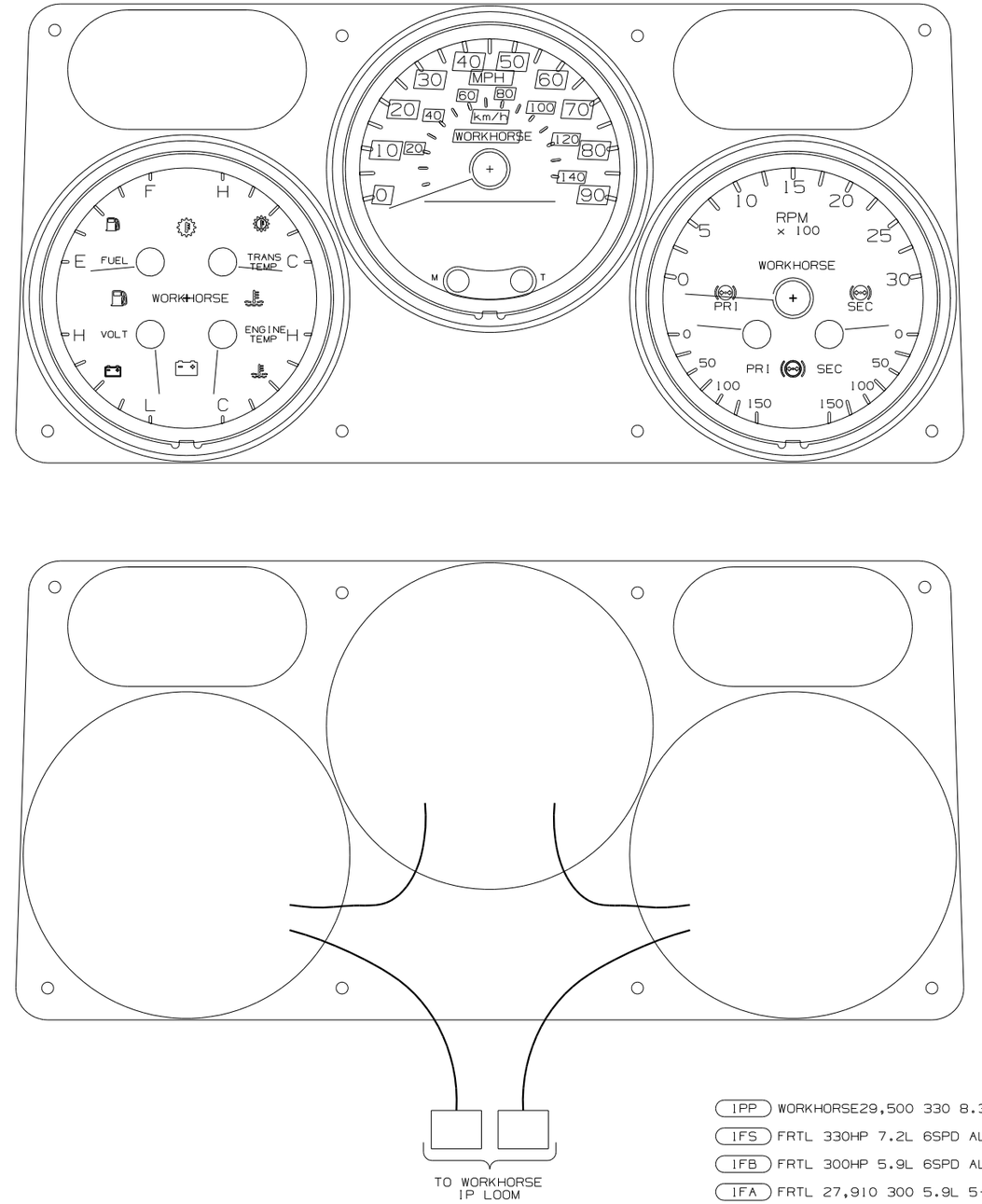

1PP WORKHORSE29,500 330 8.3L 6SP
1FS FRTL 330HP 7.2L 6SPD AL WHLS
1FB FRTL 300HP 5.9L 6SPD AL WHLS
1FA FRTL 27,910 300 5.9L 5-SP
27E CODES/STANDARDS-CMVSS
265 CODES/STANDARDS-CSA/CMVSS

2 ANY PLUG ON CLUSTER WIRE ASM WILL FIT ANY GAUGE.

1. ALL GAUGES, RETAINER CLIPS AND FASTENERS ARE CHASSIS SUPPLIED.

NOTES:

1FA 1FB 1FS

1PP

FOR ELECTRICAL TORQUE SPECIFICATIONS SEE DWG NO. 128783-01-000

X-X FOR ELECTRICAL CALLOUTS SEE DWG NO. 121339-01-000

1B1 265

FIRST USED 04 P-SER

DO NOT SCALE DRAWING

TITLE: WIRING INSTL-FRONT END

SHEET 8 PART NO 144979

DWG NO 144979

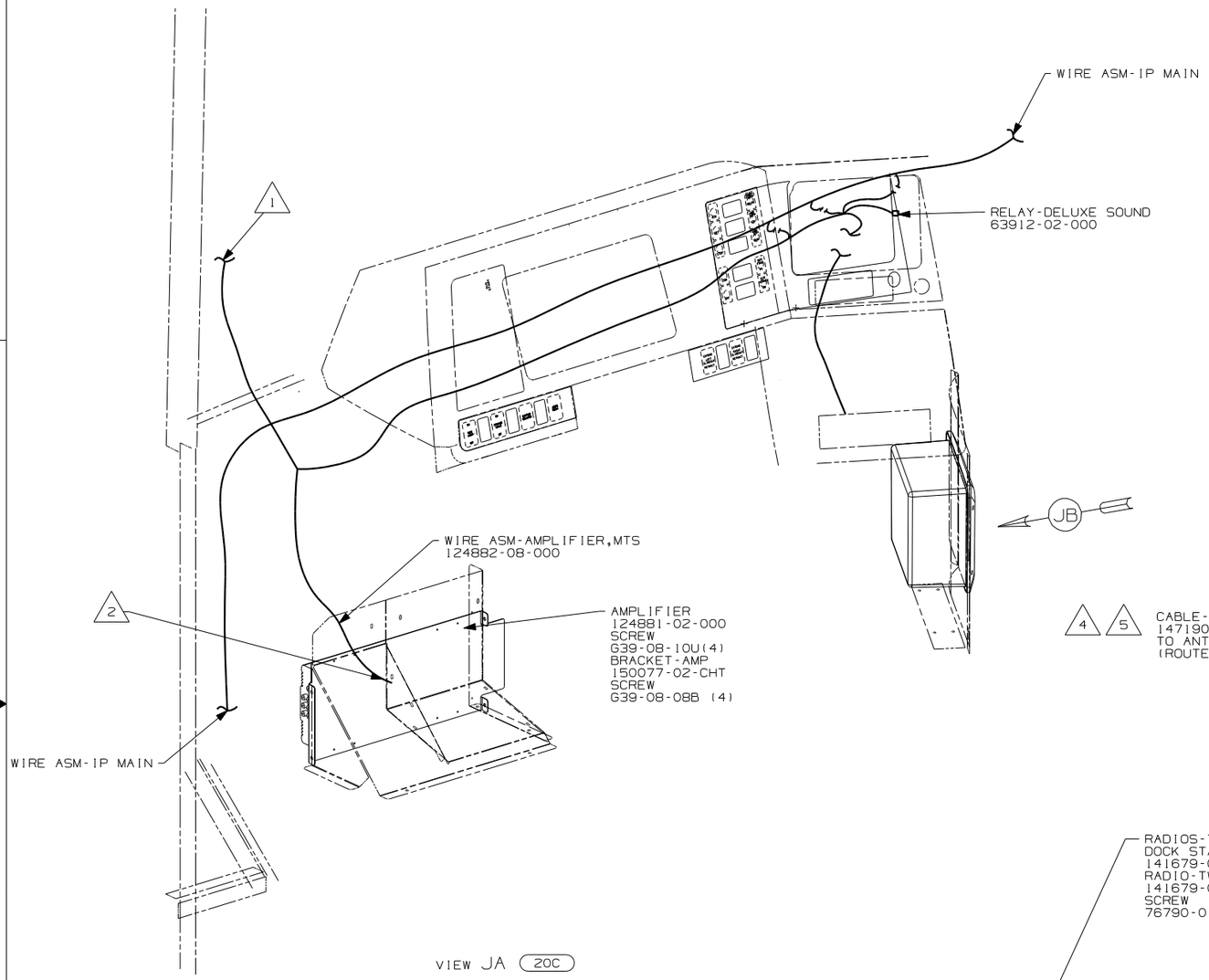

VIEW JA 20C

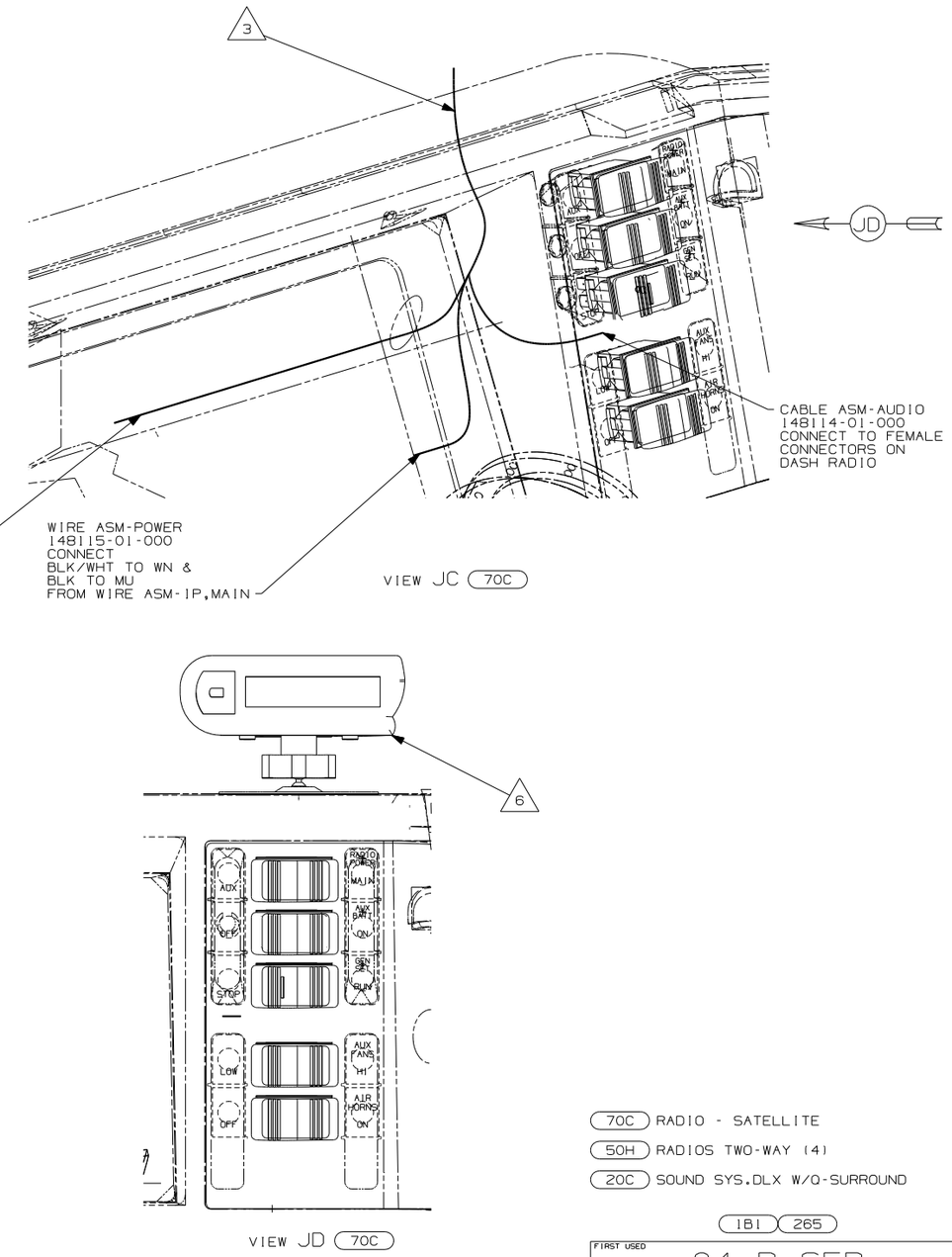

VIEW JC 70C

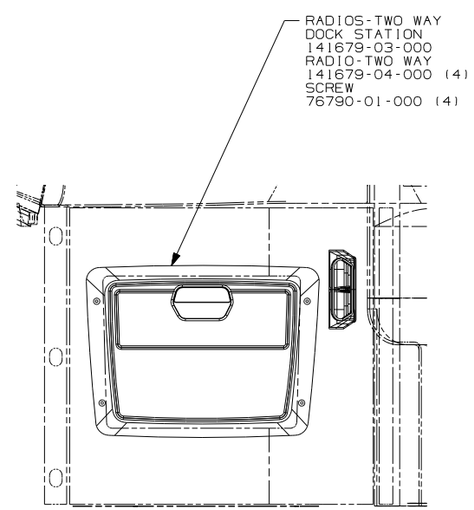

VIEW JB 50H

VIEW JD 70C

6 MOUNT TUNER SO IT IS CENTERED ON SWITCHES AND FRONT EDGE OF BRACKET TO BE FLUSH WITH DASH POD.

5 PLUG CABLE MARKED TERR TO TERR INPUT & THE CABLE MARKED SAT INTO THE SAT INPUT ON THE SATELLITE RECIEVER, REAR OF SATELLITE TUNER.

4 SEE ANTENNA INSTL-RADIO & CB FOR ADDITIONAL INFORMATION.

3 DRILL 19mm HOLE IN BACK OF DASH POD DIRECTLY BEHIND MOUNTING BRACKET. USE GROMMET 71015-40-000. COVER WIRES WITH CONDUIT 41953-01-000 (300mm) AND ROUTE THROUGH GROMMET.

2 PLUG RCA CABLES INTO PORTS MARKED STEREO TV INPUT.

1 RUN DELUXE SOUND RCA CABLES AND 2 PIN HOUSING UP THE LEFT A-PILLAR TO TV AND CENTER CHANNEL SPEAKER.

NOTES:

70C RADIO - SATELLITE

50H RADIOS TWO-WAY (4)

20C SOUND SYS.DLX W/Q-SURROUND

IBI 265

FOR ELECTRICAL TORQUE SPECIFICATIONS SEE DWG NO. 128783-01-000

X-X FOR ELECTRICAL CALLOUTS SEE DWG NO. 121339-01-000

FIRST USED 04 P-SER

DO NOT SCALE DRAWING

TITLE: WIRING INSTL-FRONT END

SHEET 9 PART NO 144979

DWG NO 144979

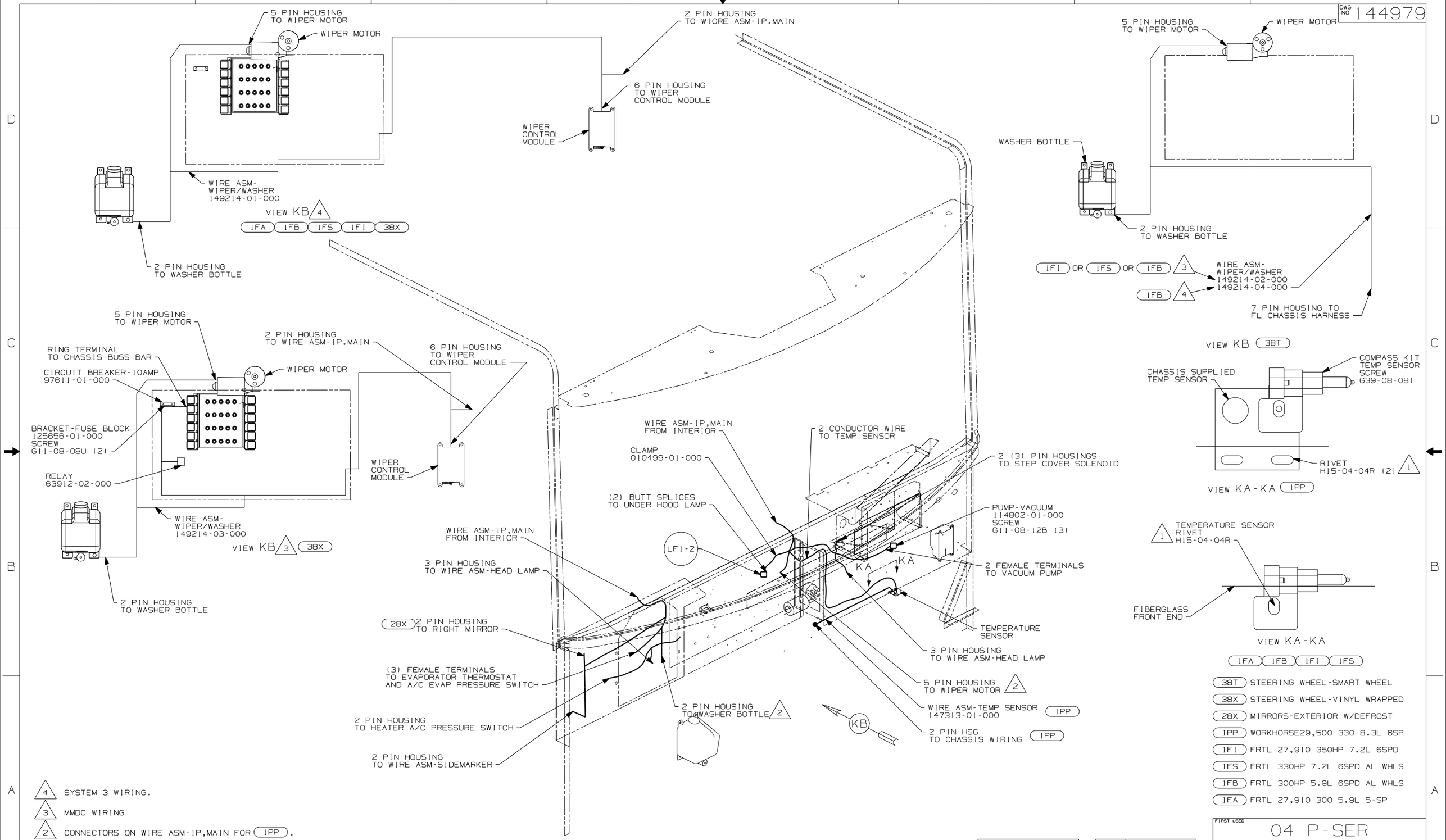

1FA 1FB 1FI 1FS

38T STEERING WHEEL-SMART WHEEL
38X STEERING WHEEL-VINYL WRAPPED
28X MIRRORS-EXTERIOR W/DEFROST
1PP WORKHORSE29,500 330 8.3L 6SP
1FI FRTL 27,910 350HP 7.2L 6SPD
1FS FRTL 330HP 7.2L 6SPD AL WHLS
1FB FRTL 300HP 5.9L 6SPD AL WHLS
1FA FRTL 27,910 300 5.9L 5-SP

4 SYSTEM 3 WIRING.
3 MMDC WIRING
2 CONNECTORS ON WIRE ASM-IP,MAIN FOR 1PP.
1 DRILL 4.8 DIA HOLE AND MOUNT ON LOWER FLANGE OF FRONT END.

NOTES:

FOR ELECTRICAL TORQUE SPECIFICATIONS SEE DWG NO. 128783-01-000

X-X FOR ELECTRICAL CALLOUTS SEE DWG NO. 121339-01-000

FIRST USED 04 P-SER

DO NOT SCALE DRAWING

TITLE: WIRING INSTL-FRONT END

SHEET 10 PART NO 144979

DRAWING NO.	MODEL	SHEETS
148395-01	F-SERIES	1,3
148395-02	G-SERIES	1,3
148395-03	P-SERIES	2,3

RELEASE	REV A	DATE	DWG NO 148395
REV	ZONE	REVISION RECORD	DATE / DFTR-ORIG

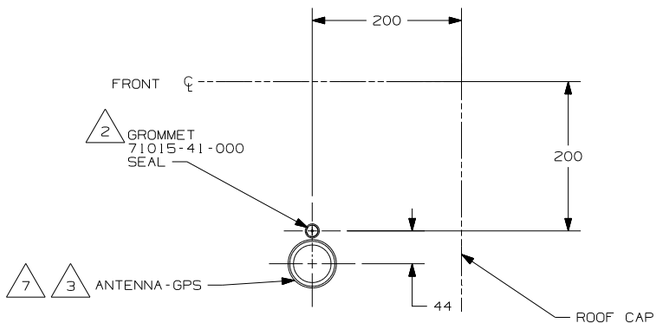

VIEW AA

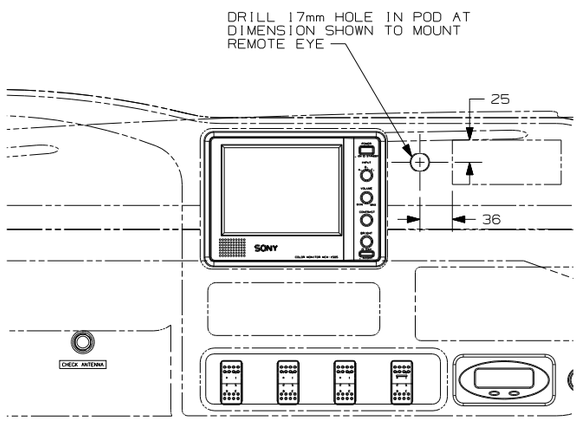

VIEW AB

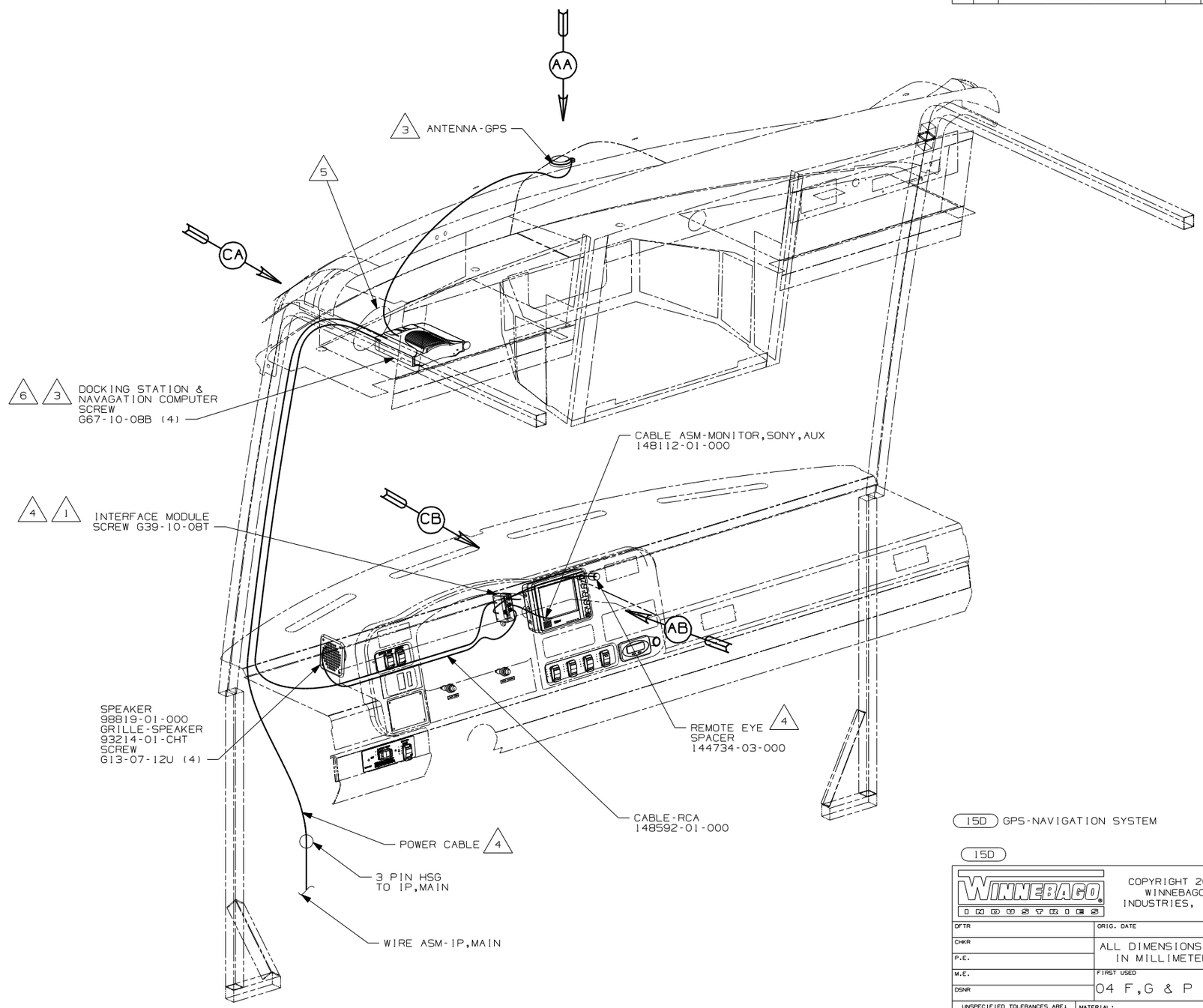

7 USE 076322-02-000 (100mm) TAPE-FOAM DBI COATED TO ATTACH ANTENNA-GPS TO ROOF.

6 DOCKING STATION MUST FACE EXACTLY STRAIGHT AHEAD AND PARALLEL WITH CENTER LINE OF COACH TO FUNCTION PROPERLY.

5 WIRES ROUTED THROUGH BACK OF OVERHEAD.

4 COMPONENT INCLUDED IN P/N 148158-02-000.

3 COMPONENT INCLUDED IN P/N 148158-01-000.

2 DRILL 15 mm HOLE IN FIBERGLASS CAP, CUT GROMMET AND SLIDE ANTENNA WIRE INTO GROMMET & SEAL.

1 MOUNT INTERFACE MODULE TO MONITOR SIDE OF STEEL BRACKET.

NOTES:

15D GPS-NAVIGATION SYSTEM

15D

WINNEBAGO INDUSTRIES

COPYRIGHT 2004
WINNEBAGO
INDUSTRIES, INC.

DFTR	ORIG. DATE
CHKR	ALL DIMENSIONS ARE IN MILLIMETERS
P.E.	
M.E.	FIRST USED
DSNR	04 F,G & P SER

UNSPECIFIED TOLERANCES ARE:
WHOLE DIM (X) :
ONE-PLACE (X.X) :
TWO-PLACE (X.XX) :
ANGLE :

THIRD ANGLE PROJECTION

MATERIAL:

DO NOT SCALE DRAWING

TITLE: WIRING INSTL-GPS

SHEET 1 OF 3 | PART NO 148395

DWG NO 148395

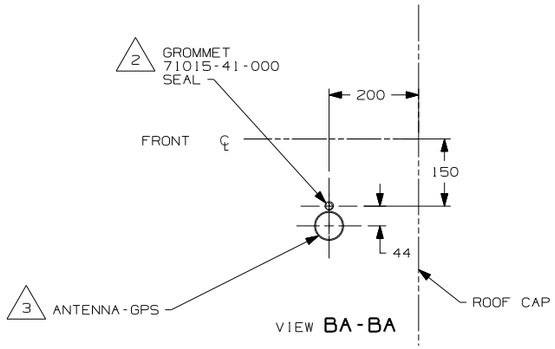

VIEW BA-BA

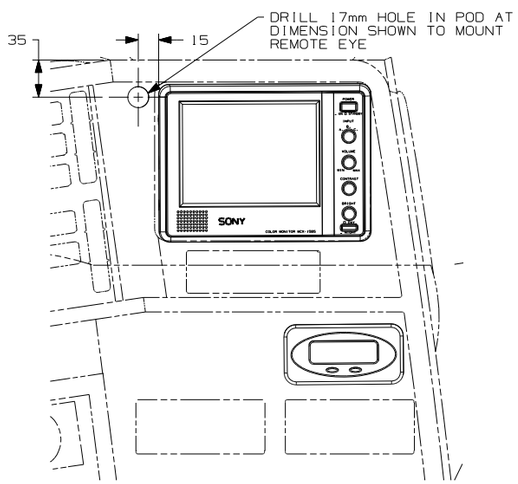

VIEW BB

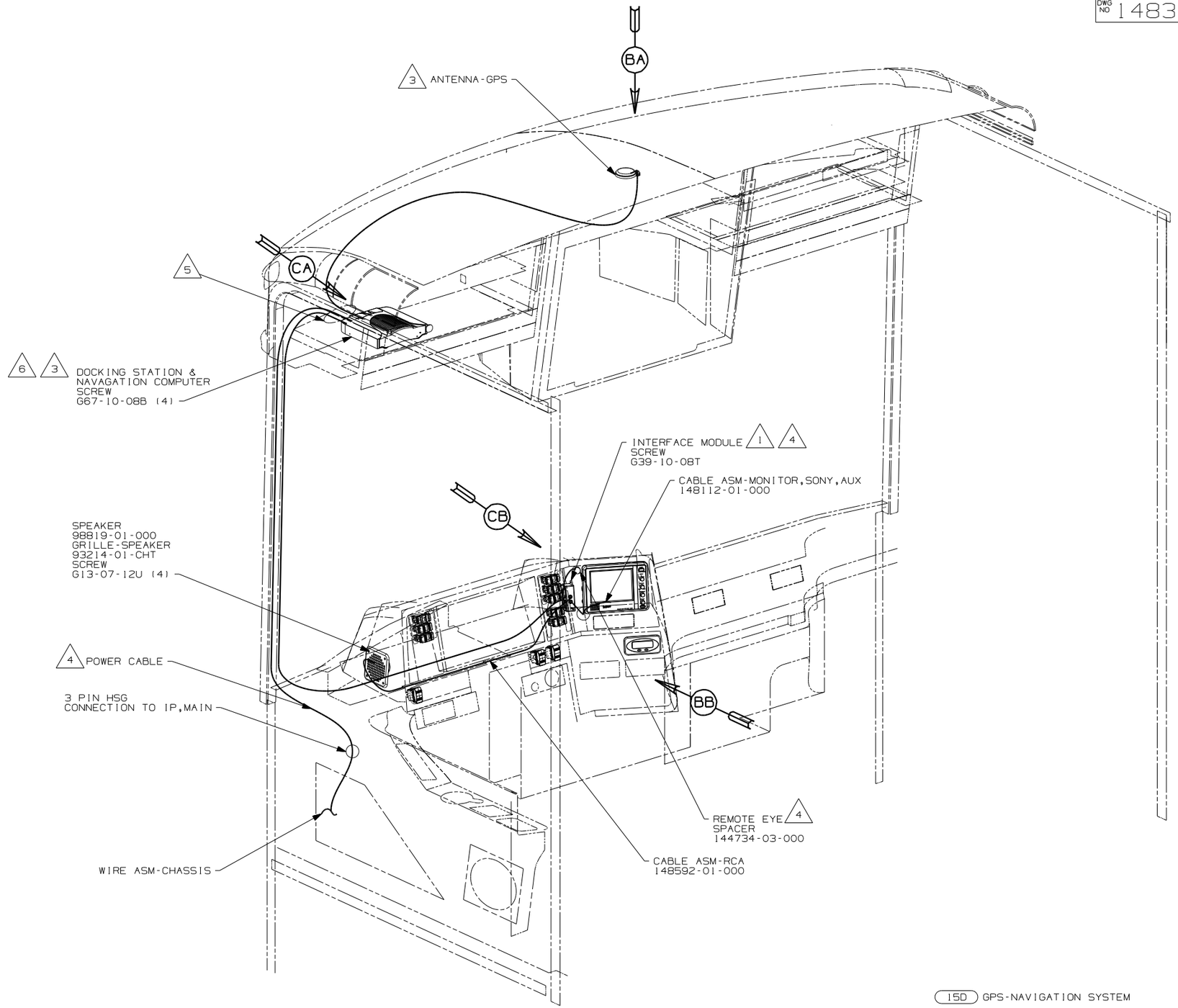

6 DOCKING STATION MUST FACE EXACTLY STRAIGHT AHEAD AND PARALLEL WITH CENTER LINE OF COACH TO FUNCTION PROPERLY.

5 WIRES ROUTED THROUGH BACK OF OVERHEAD.

4 COMPONENT INCLUDED IN P/N 148158-02-000.

3 COMPONENT INCLUDED IN P/N 148158-01-000.

2 DRILL 15 mm HOLE IN FIBERGLASS CAP, CUT GROMMET AND SLIDE ANTENNA WIRE INTO GROMMET & SEAL.

1 MOUNT INTERFACE MODULE TO MONITOR SIDE OF STEEL BRACKET.

NOTES:

15D GPS-NAVIGATION SYSTEM

15D

FIRST USED	04 P-SER
DO NOT SCALE DRAWING	
TITLE:	WIRING INSTL-GPS
SHEET 2	PART NO 148395

DWG NO 148395

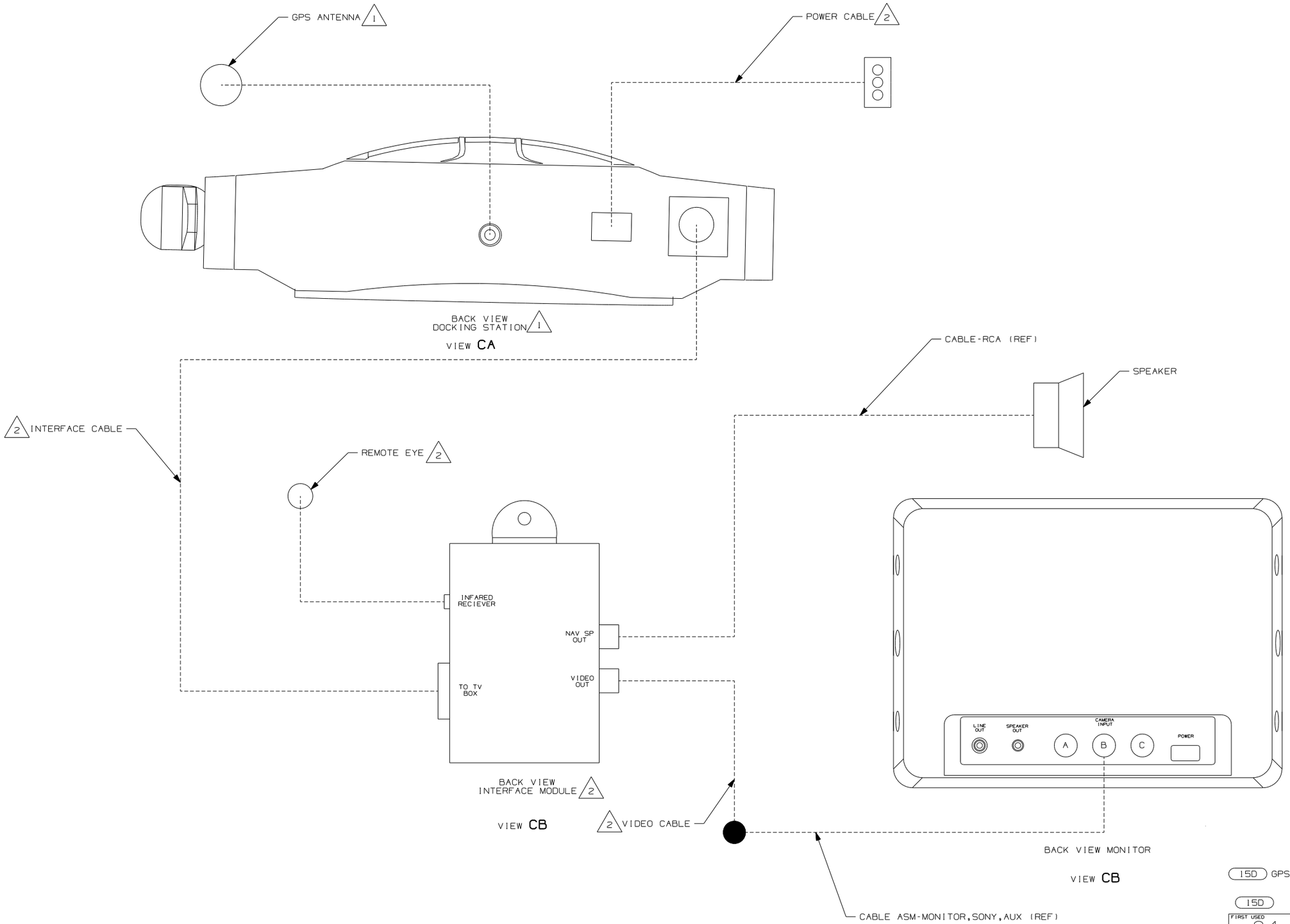

2 COMPONENT INCLUDED IN P/N 148158-02-000

1 COMPONENT INCLUDED IN P/N 148158-01-000

NOTES:

15D GPS-NAVIGATION SYSTEM

15D

FIRST USED 04 F,G & P SER	
DO NOT SCALE DRAWING	
TITLE: WIRING INSTL-GPS	
SHEET 3	PART NO 148395

DWG NO	SHEET	DESCRIPTION
133004-01	1	2TK,DIG VOLT
133004-02	2	2T,DIG VOLT,SOLAR
133004-03	3	2TK, W/SOL & PAN
133004-04	4	2TK, W/O WAT HEAT
133004-05	5,6,7	2T,SOLAR/SENSOR

RELEASE	REV A	DATE	DWG NO 133004
REV	ZONE	REVISION RECORD	DATE / DFTR-ORIG

PIN #
1. 16 RED GENERATOR METER (+)
2. 16 YEL GENERATOR START
3. 16 GRN GENERATOR STOP
4. 16 BLK GENERATOR)-)

HOUSING-AMP
(UNIVERSAL MATE-N-LOK)
1-480702-0
CONTACT-PIN
350538-1

PIN #
1. 14 BLK (HOUSE +12VDC)
2. 14 (CHASSIS +12VDC)
3. 14 WHT (GROUND)
4. 20 RED (WATER TANK)
5. 20 BRN (BLACK TANK)
6. 20 GRY (GRAY TANK)
7. 12 RED/WHT (REMOTE WATER PUMP SWITCH)
8. 12 RED (WATER PUMP SWITCH)
9. 12 WHT/RED (REMOTE WATER PUMP)
10. BLANK
11. BLANK
12. 20 WHT/GRN (LP TANK SENSOR)
13. 16 YEL (WATER HEATER IGNITION)
14. BLANK
15. 20 WHT/BLU (WATER HEATER INDICATOR)

HOUSING-AMP
(UNIVERSAL MATE-N-LOK)
1-480710-0
CONTACT-PIN
350538-1

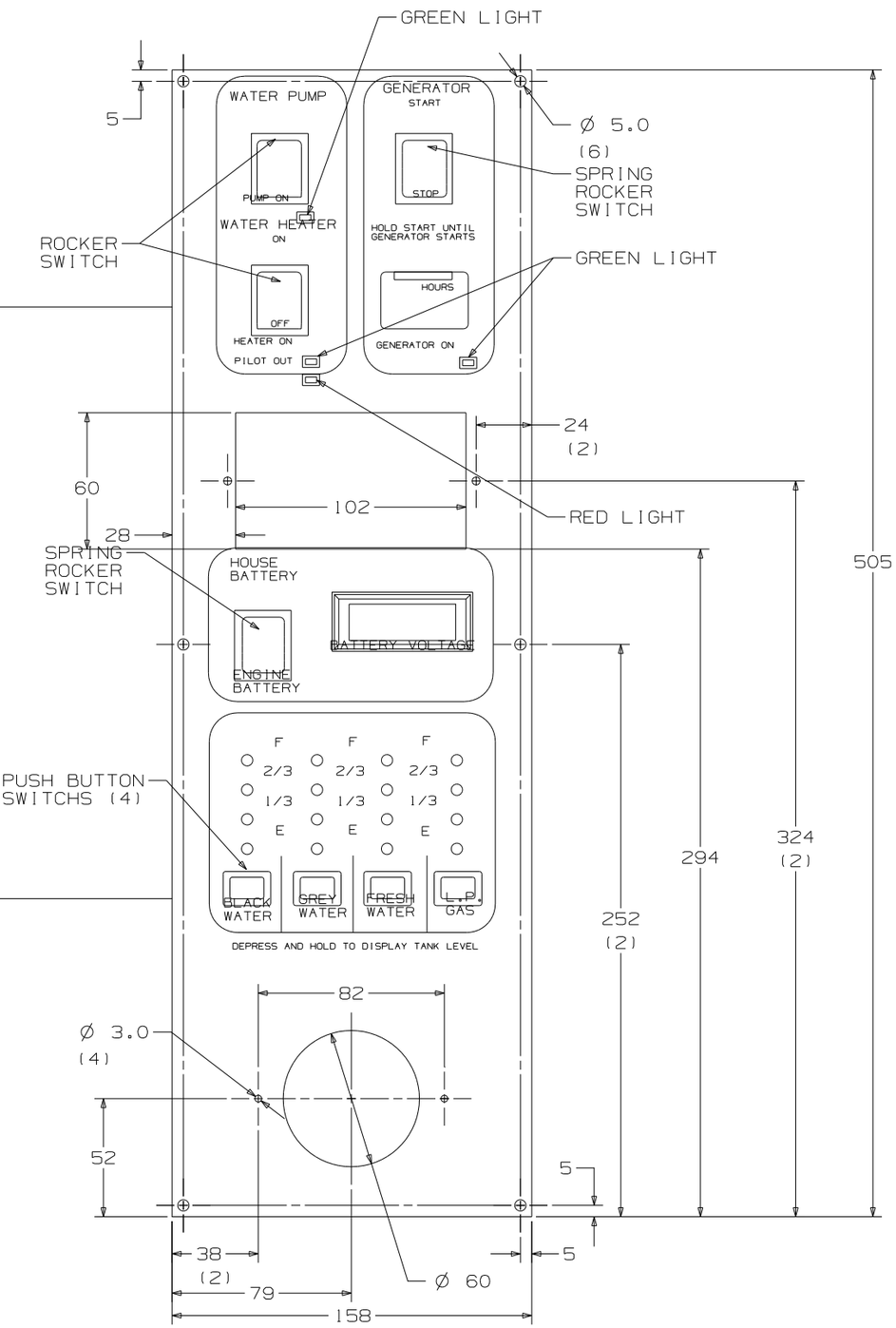

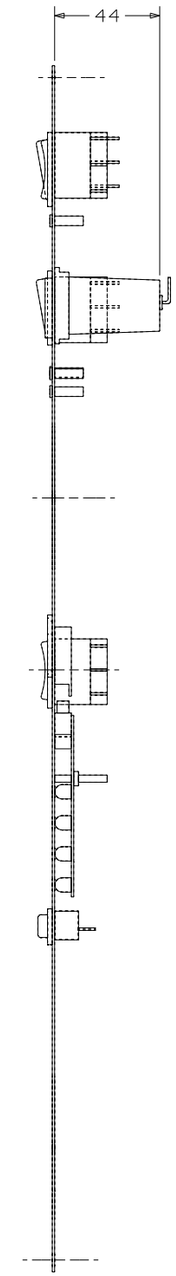

5. SWITCH RATING SHALL BE EMBOSSED ON THE SIDE OF THE 12V SWITCHES.
4. CUTOUT FOR PANEL TO BE 135 X 350 MIN/ 140 X 380 MAX.
3. LETTERS ON MAIN HEADING TO BE 5MM HIGH.
2. BLACK PANEL WITH WHITE GRAPHICS.
1. SUGGESTED VENDOR: VENLINE.

NOTES:

SEE CHART
FOR COLOR VARIATIONS OF THIS PART

WINNEBAGO INDUSTRIES

COPYRIGHT 2004 WINNEBAGO INDUSTRIES, INC.

DFTR	ORIG. DATE
CHKR	ALL DIMENSIONS ARE IN MILLIMETERS
P.E.	
M.E.	FIRST USED
DSNR	STANDARDS

UNSPECIFIED TOLERANCES ARE:
WHOLE DIM (X) : 1
ONE-PLACE (X.X) :
TWO-PLACE (X.XX) :
ANGLE :

MATERIAL:

THIRD ANGLE PROJECTION

DO NOT SCALE DRAWING

TITLE: PANEL-MONITOR

SHEET 1 OF 7 | PART NO 133004

REF: 1 5/5/2004

DWG NO 133004

PIN #
1. 16 RED GENERATOR METER (+)
2. 16 YEL GENERATOR START
3. 16 GRN GENERATOR STOP
4. 16 BLK GENERATOR)-)

HOUSING-AMP
(UNIVERSAL MATE-N-LOK)
1-480702-0
CONTACT-PIN
350538-1

PIN #
1. 14 BLK (HOUSE +12VDC)
2. 14 (CHASSIS +12VDC)
3. 14 WHT (GROUND)
4. 20 RED (WATER TANK)
5. 20 BRN (BLACK TANK)
6. 20 GRY (GRAY TANK)
7. 12 RED/WHT (REMOTE WATER PUMP SWITCH)
8. 12 RED (WATER PUMP SWITCH)
9. 12 WHT/RED (REMOTE WATER PUMP)
10. BLANK
11. BLANK
12. 20 WHT/GRN (LP TANK SENSOR)
13. 16 YEL (WATER HEATER IGNITION)
14. BLANK
15. 20 WHT/BLU (WATER HEATER INDICATOR)

HOUSING-AMP
(UNIVERSAL MATE-N-LOK)
1-480710-0
CONTACT-PIN
350538-1

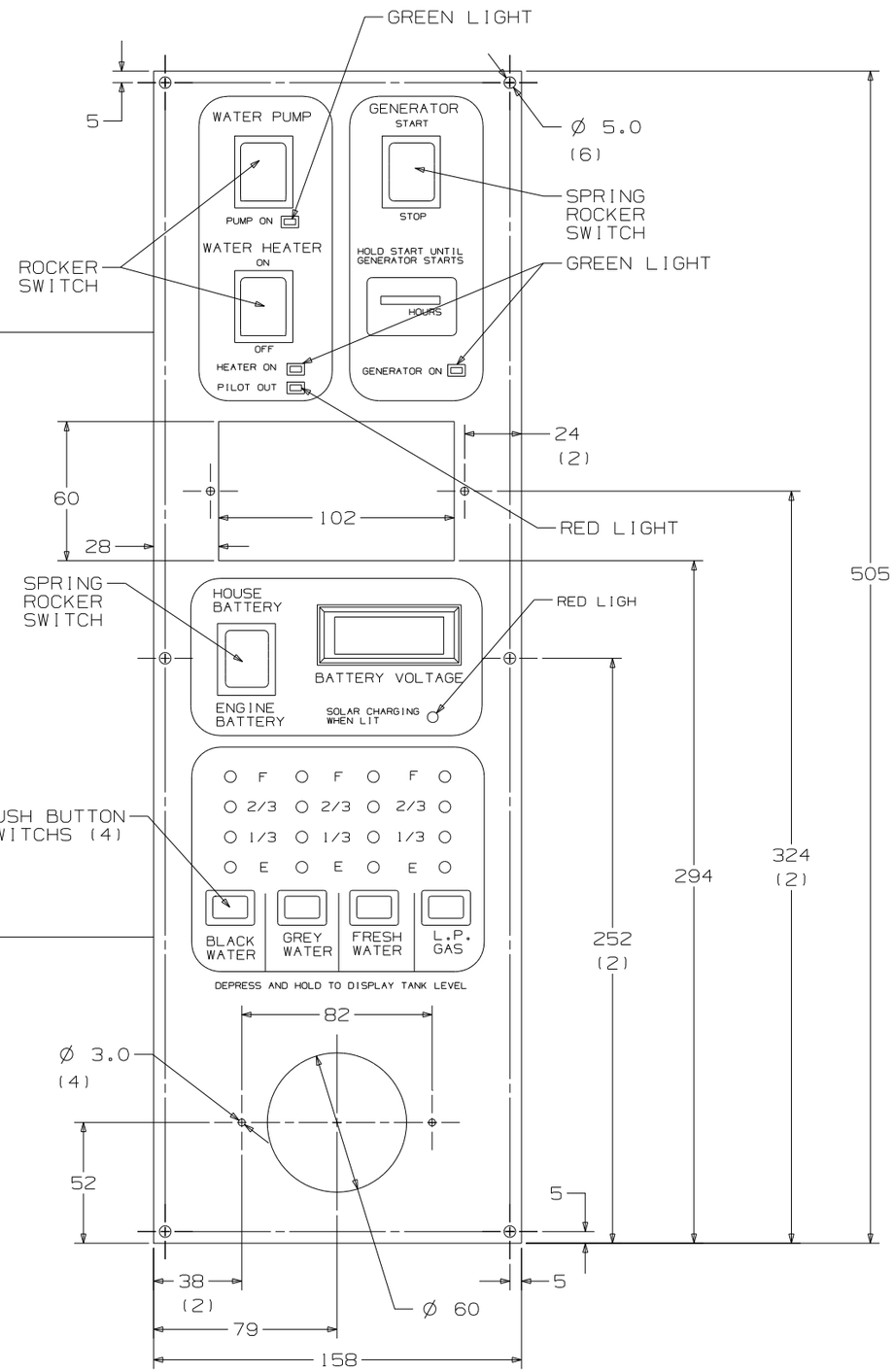

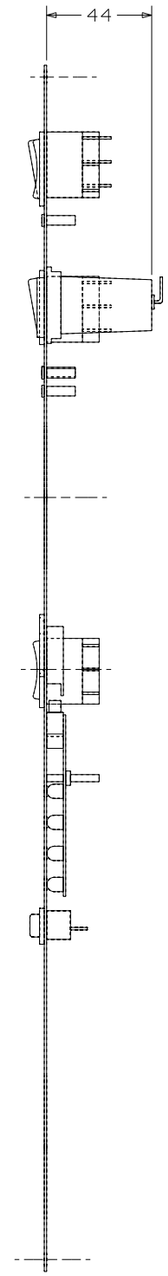

FIRST USED	STANDARDS
	DO NOT SCALE DRAWING
TITLE:	PANEL-MONITOR
SHEET 2	PART NO 133004

DWG NO 133004

PIN #
1. 16 RED GENERATOR METER (+)
2. 16 YEL GENERATOR START
3. 16 BRN GENERATOR STOP
4. 16 BLK GENERATOR (-)

HOUSING-AMP
(INIVERSAL MATE-N-LOK)
1-480702-0
CONTACT-PIN
350538-1

PIN #
1. 14 BLK (HOUSE +12VDC)
2. 14 (CHASSIS +12VDC)
3. 14 WHT (GROUND)
4. 20 RED (WATER TANK)
5. 20 BRN (BLACK TANK)
6. 20 GRY (GRAY TANK)
7. 12 RED/WHT (REMOTE WATER PUMP SWITCH)
8. 12 RED (WATER PUMP SWITCH
9. 12 WHT/RED (REMOTE WATER PUMP)
10. BLANK
11. BLANK
12. 20 WHT/GRN (LP TANK SENSOR)
13. 16 YEL (WATER HEATER IGNITION)
14. BLANK
15. 20 WHT/BLU (WATER HEATER INDICATOR)

HOUSING-AMP
(INIVERSAL MATE-N-LOK)
1-480710-0
CONTACT-PIN
350538-1

HOUSING-AMP
(UNIVERSAL-MATE-N-LOK)
1-480698-0
PIN
350538-0

PIN #
1. 16 BLK
2. 16 RED

HOUSING-AMP
(UNIVERSAL-MATE-N-LOK)
1-480699-0
PIN
350537-0

PIN #
1. 16 GRN
2. 16 RED

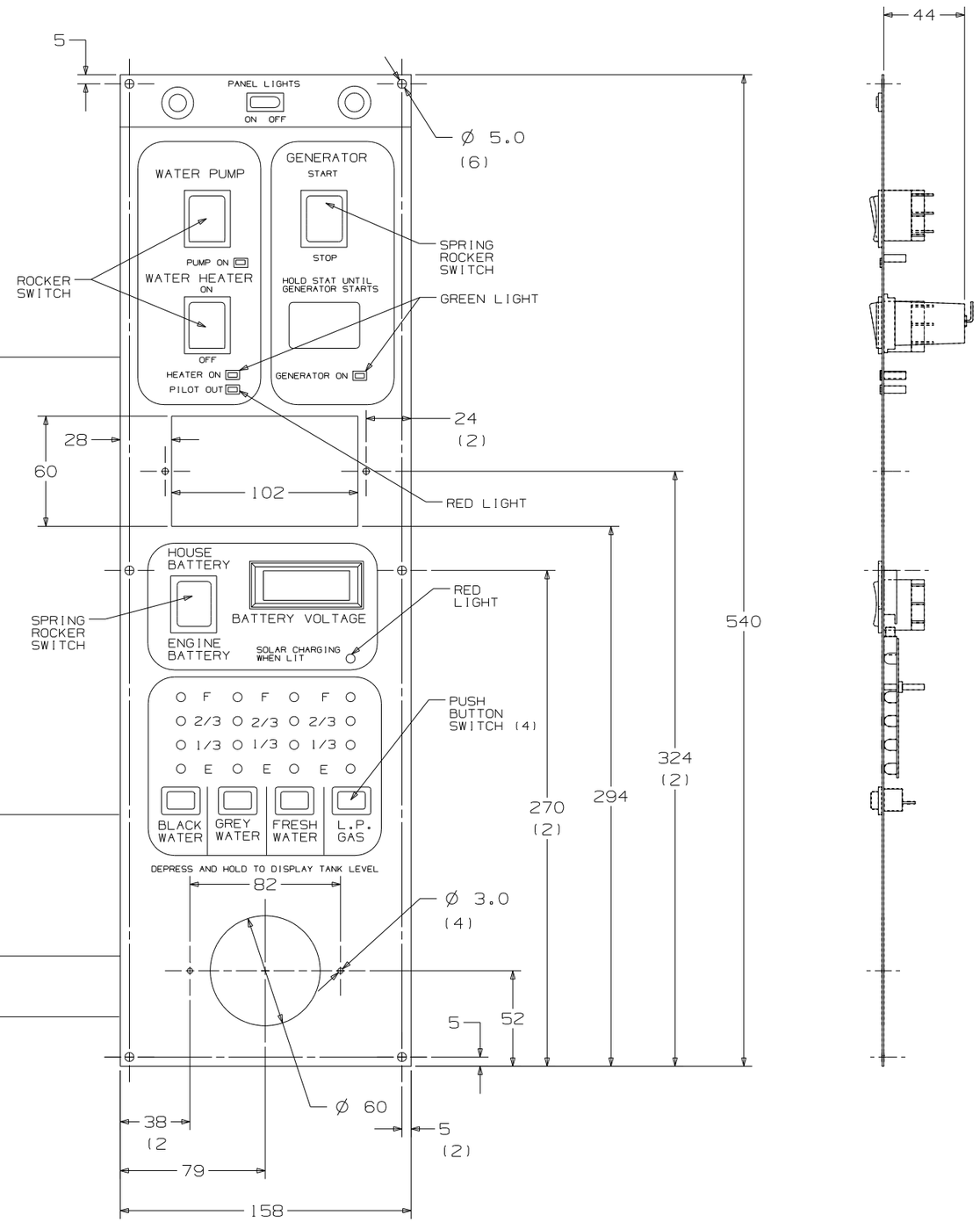

FIRST USED	STANDARD
	DO NOT SCALE DRAWING
TITLE:	PANEL-MONITOR
SHEET 3	PART NO 133004

DWG NO 133004

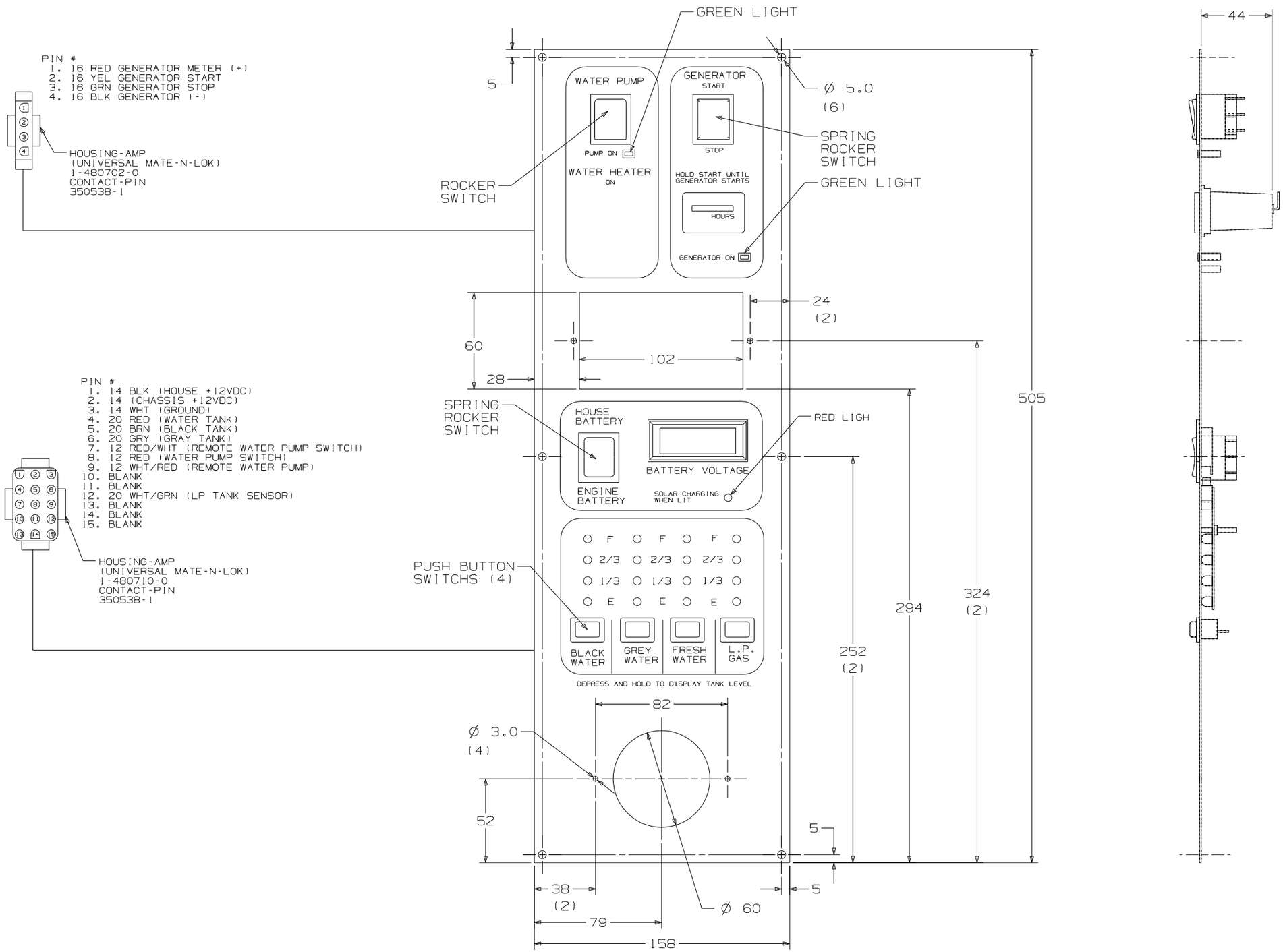

FIRST USED	STANDARDS
	DO NOT SCALE DRAWING
TITLE:	PANEL-MONITOR
SHEET 4	PART NO 133004

DWG NO 133004

CONFIDENTIAL
THIS DOCUMENT, INCLUDING ALL INFORMATION CONTAINED HEREIN, IS THE EXCLUSIVE AND CONFIDENTIAL PROPERTY OF VENTLINE DIVISION OF TOMKINS INDUSTRIES INC. THE DOCUMENT AND INFORMATION ARE NOT TO BE COPIED, REPRODUCED OR DELIVERED TO OTHERS, IN WHOLE OR IN PART, WITHOUT THE EXPRESS WRITTEN PERMISSION OF VENTLINE. THE DOCUMENT IS TO BE RETURNED PROMPTLY TO VENTLINE AFTER HAVING SERVED THE PURPOSE FOR WHICH DELIVERED.
©1995 VENTLINE DIVISION, TOMKINS INDUSTRIES, INC.
All Rights Reserved, including the right to reproduce this document or any part thereof

LTR.	DESCRIPTION	DATE	DG. BY	CK. BY
LTR	DESCRIP ECN 16261	DATE	CHG BY	CHKBY
A	SEE PAGE 3 ECN 16381	4-6-04	RJL	RJL
B	L5130-02 WAS L5113-04 ECN 16394	4-21-04	RJL	RJL

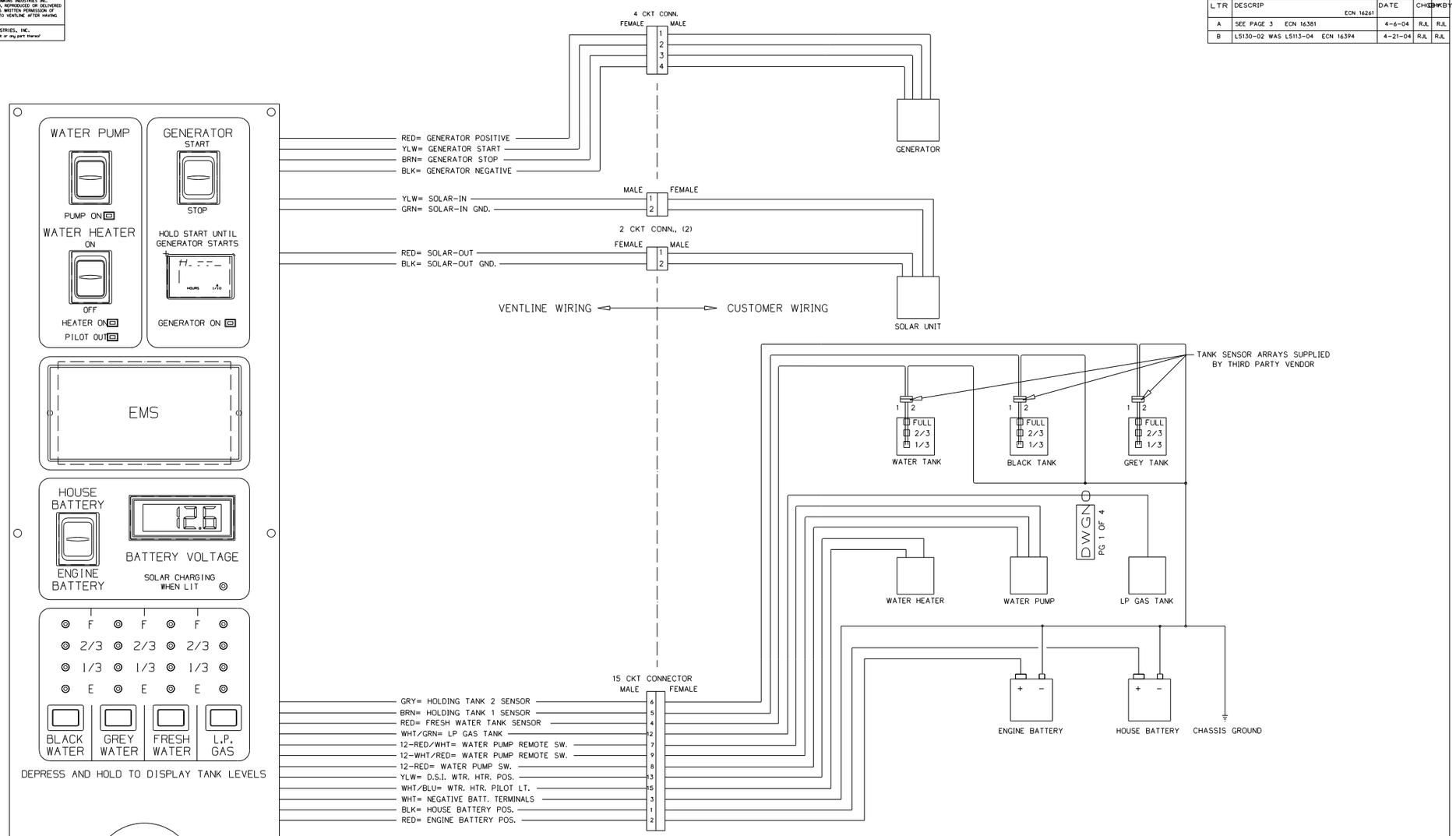

NOTES:

1. UNLESS OTHERWISE SPECIFIED ALL WIRE IS 22 AWG.
2. REF. DWG.'S:
   HARNESS, INTERNAL & SWITCH= L7785-01, -02
   HARNESS, GEN. INTERNAL & SWITCH= L7786-00
   HARNESS, SOLAR LIGHT= L7722-00
   PCB= L5130-02
   HARNESS, TEST= L8012-00
   TEST BOX= L8506-00
3. ALL PIGTAILS TO BE SUPPLIED BY CUSTOMER.
4. BEFORE PACKING, SECURE HARNESS WITH VD0169-00 TIE WRAP ON RIGHT SIDE POST.

PART NO.	REQ'D	MATERIAL	DESCRIPTION	DWG SIZE

BLANK SIZE BLANK WGT | USED ON USEDON

DRAWN DATE DRWNDATE | MATERIAL MATL MATL MATL MATL | PHILIPS IND. INC. VENTLINE DIVISION BRISTOL, INDIANA 46507

CHECKED DATE | NAME DWGNAME DWGNAME DWGNAME | SCALE: SCALE

CHECKED DATE | DWG. NO. PG 1 OF 4 DWGNO

APPV'D DATE

ENGLISH (TOLERANCE UNLESS SPECIFIED) 0 PL.: .040 1 PL.: .020 2 PL.: .010 3 PL.: .005 FRACTIONS ±1/64

FIRST USED STANDARD

DO NOT SCALE DRAWING

TITLE: PANEL-MONITOR

SHEET 5 | PART NO 133004

DWG NO 133004

CONFIDENTIAL
THIS DOCUMENT, INCLUDING ALL INFORMATION CONTAINED HEREIN, IS THE EXCLUSIVE AND CONFIDENTIAL PROPERTY OF VENTLINE DIVISION OF TOMKINS INDUSTRIES INC. THE DOCUMENT AND INFORMATION ARE NOT TO BE COPIED, REPRODUCED OR DELIVERED TO OTHERS, IN WHOLE OR IN PART, WITHOUT THE EXPRESS WRITTEN PERMISSION OF VENTLINE. THE DOCUMENT IS TO BE RETURNED PROMPTLY TO VENTLINE AFTER HAVING SERVED THE PURPOSE FOR WHICH DELIVERED.
©1995 VENTLINE DIVISION, TOMKINS INDUSTRIES, INC.
All Rights Reserved, including the right to reproduce this document or any part thereof

LTR.	DESCRIPTION	DATE	CHG. BY	CHK. BY
LTR	DESCRIP ECN 16261	DATE	CHG	CHKBY
A	ADDED LABEL DETAIL ECN 16381	4-6-04	RJL	RJL
B	L5130-02 WAS L5113-04 ECN 16394	4-21-04	RJL	RJL

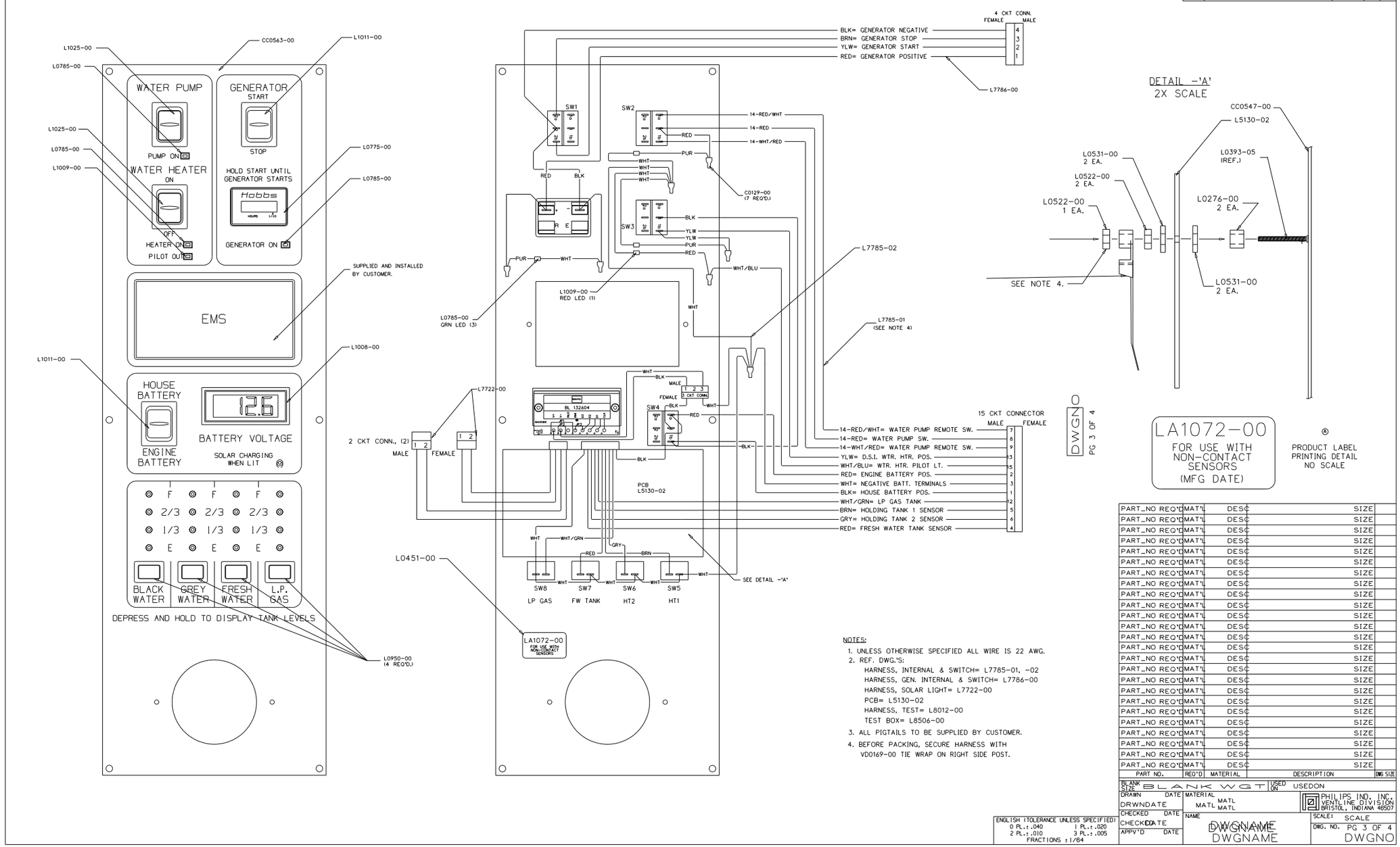

NOTES:

1. UNLESS OTHERWISE SPECIFIED ALL WIRE IS 22 AWG.
2. REF. DWG.'S:
   HARNESS, INTERNAL & SWITCH= L7785-01, -02
   HARNESS, GEN. INTERNAL & SWITCH= L7786-00
   HARNESS, SOLAR LIGHT= L7722-00
   PCB= L5130-02
   HARNESS, TEST= L8012-00
   TEST BOX= L8506-00
3. ALL PIGTAILS TO BE SUPPLIED BY CUSTOMER.
4. BEFORE PACKING, SECURE HARNESS WITH VD0169-00 TIE WRAP ON RIGHT SIDE POST.

PART_NO REQ'D	MAT'L	DESC	SIZE
PART_NO REQ'D	MAT'L	DESC	SIZE
PART_NO REQ'D	MAT'L	DESC	SIZE
PART_NO REQ'D	MAT'L	DESC	SIZE
PART_NO REQ'D	MAT'L	DESC	SIZE
PART_NO REQ'D	MAT'L	DESC	SIZE
PART_NO REQ'D	MAT'L	DESC	SIZE
PART_NO REQ'D	MAT'L	DESC	SIZE
PART_NO REQ'D	MAT'L	DESC	SIZE
PART_NO REQ'D	MAT'L	DESC	SIZE
PART_NO REQ'D	MAT'L	DESC	SIZE
PART_NO REQ'D	MAT'L	DESC	SIZE
PART_NO REQ'D	MAT'L	DESC	SIZE
PART_NO REQ'D	MAT'L	DESC	SIZE
PART_NO REQ'D	MAT'L	DESC	SIZE
PART_NO REQ'D	MAT'L	DESC	SIZE
PART_NO REQ'D	MAT'L	DESC	SIZE
PART_NO REQ'D	MAT'L	DESC	SIZE
PART_NO REQ'D	MAT'L	DESC	SIZE
PART_NO REQ'D	MAT'L	DESC	SIZE
PART_NO REQ'D	MAT'L	DESC	SIZE
PART_NO REQ'D	MAT'L	DESC	SIZE
PART_NO REQ'D	MAT'L	DESC	SIZE
PART_NO REQ'D	MAT'L	DESC	SIZE
PART_NO REQ'D	MAT'L	DESC	SIZE
PART_NO REQ'D	MAT'L	DESC	SIZE
PART_NO REQ'D	MAT'L	DESC	SIZE
PART NO.	REQ'D	MATERIAL	DESCRIPTION	DWG SIZE

BLANK SIZE BLANK WGT | USED ON USEDON

DRAWN DATE DRWNDATE | MATERIAL MATL MATL | PHILIPS IND. INC. VENTLINE DIVISION BRISTOL, INDIANA 46507

CHECKED DATE CHECKDATE | NAME DWGNAME DWGNAME DWGNAME | SCALE: SCALE

APPV'D DATE | DWG. NO. PG 3 OF 4 DWGNO

ENGLISH (TOLERANCE UNLESS SPECIFIED) 0 PL.±.040 1 PL.±.020 2 PL.±.010 3 PL.±.005 FRACTIONS ±1/64

FIRST USED STANDARD

DO NOT SCALE DRAWING

TITLE: PANEL-MONITOR

SHEET 6 | PART NO 133004

DWG NO 133004

CONFIDENTIAL
THIS DOCUMENT, INCLUDING ALL INFORMATION CONTAINED HEREIN, IS THE EXCLUSIVE AND CONFIDENTIAL PROPERTY OF VENTLINE DIVISION OF TOMKINS INDUSTRIES INC. THE DOCUMENT AND INFORMATION ARE NOT TO BE COPIED, REPRODUCED OR DELIVERED TO OTHERS, IN WHOLE OR IN PART, WITHOUT THE EXPRESS WRITTEN PERMISSION OF VENTLINE. THE DOCUMENT IS TO BE RETURNED PROMPTLY TO VENTLINE AFTER HAVING SERVED THE PURPOSE FOR WHICH DELIVERED.

©1995 VENTLINE DIVISION, TOMKINS INDUSTRIES, INC.
All Rights Reserved, including the right to reproduce this document or any part thereof

LTR.	DESCRIPTION	DATE	DWN BY	CHK BY
LTR	DESCRIP ECN 16261	DATE	CHKD	CHKBY
A	SEE PAGE 3 ECN 16381	4-6-04	RJL	RJL
B	L5130-02 WAS L5113-04 ECN 16394	4-21-04	RJL	RJL

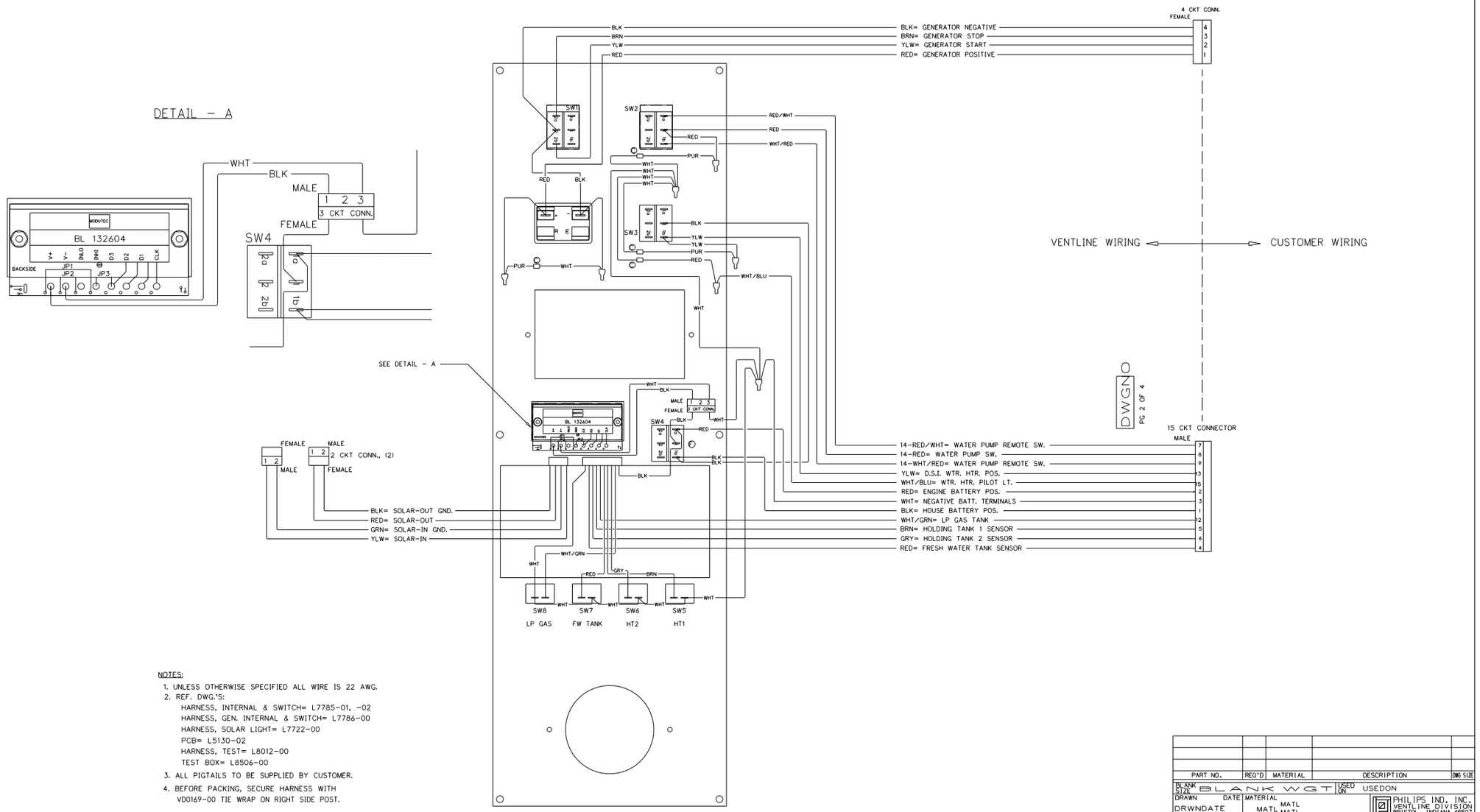

NOTES:

1. UNLESS OTHERWISE SPECIFIED ALL WIRE IS 22 AWG.
2. REF. DWG.'S:
   HARNESS, INTERNAL & SWITCH= L7785-01, -02
   HARNESS, GEN. INTERNAL & SWITCH= L7786-00
   HARNESS, SOLAR LIGHT= L7722-00
   PCB= L5130-02
   HARNESS, TEST= L8012-00
   TEST BOX= L8506-00
3. ALL PIGTAILS TO BE SUPPLIED BY CUSTOMER.
4. BEFORE PACKING, SECURE HARNESS WITH VD0169-00 TIE WRAP ON RIGHT SIDE POST.

PART NO.	REQ'D	MATERIAL	DESCRIPTION	DWG SIZE

BLANK SIZE BLANK WGT USED ON USEDON

DRAWN DATE DRWNDATE
MATERIAL MATL MATL MATL MATL
CHECKED DATE CHECKDATE
APPV'D DATE
NAME DWGNAME DWGNAME DWGNAME
SCALE: SCALE
DWG. NO. PG 2 OF 4 DWGNO

PHILIPS IND. INC.
VENTLINE DIVISION
BRISTOL, INDIANA 46507

ENGLISH (TOLERANCE UNLESS SPECIFIED)
0 PL.: .040 1 PL.: .020
2 PL.: .010 3 PL.: .005
FRACTIONS ±1/64

FIRST USED STANDARD

DO NOT SCALE DRAWING

TITLE: PANEL-MONITOR

SHEET 7 PART NO 133004

RELEASE	REV A	DATE	DWG NO 110664
REV	ZONE	REVISION RECORD	DATE / DFTR-ORIG

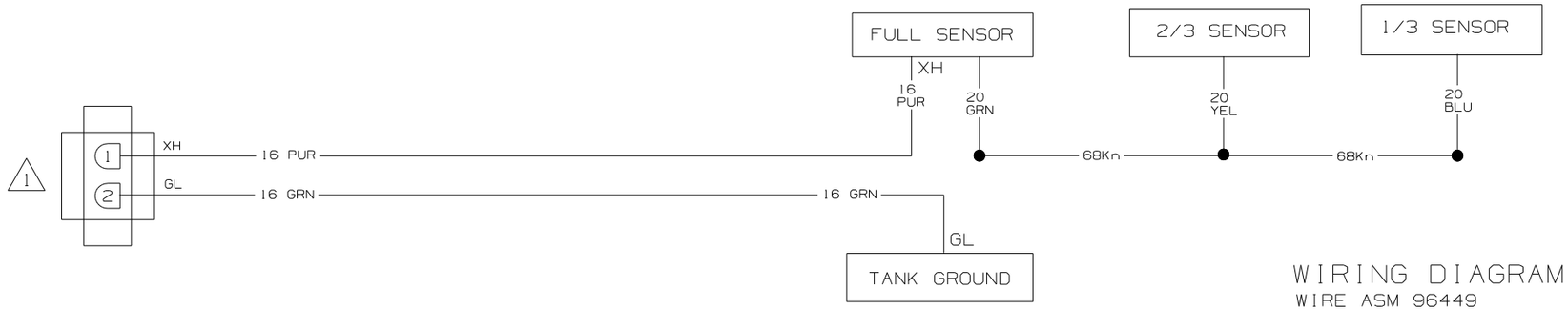

WIRING DIAGRAM-TANK, WATER
WIRE ASM 96449

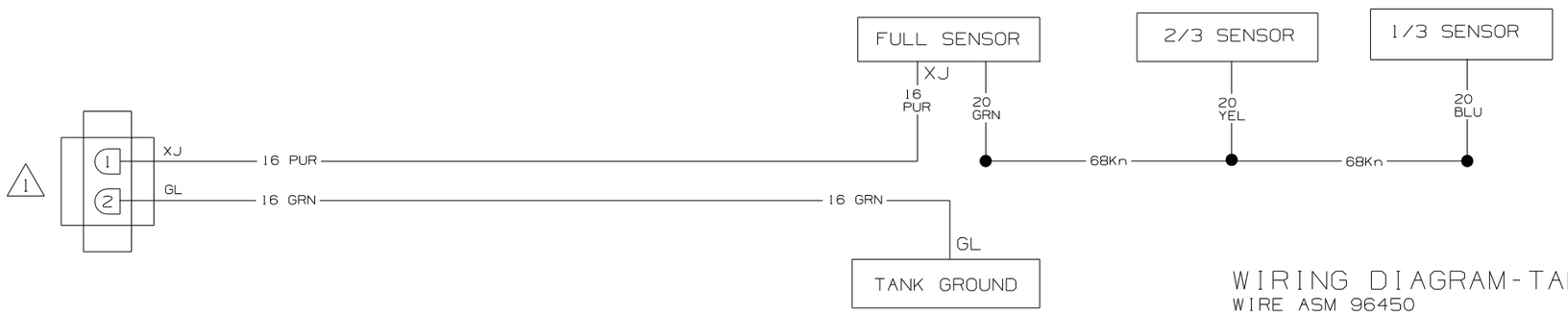

WIRING DIAGRAM-TANK, MAIN HOLDING
WIRE ASM 96450

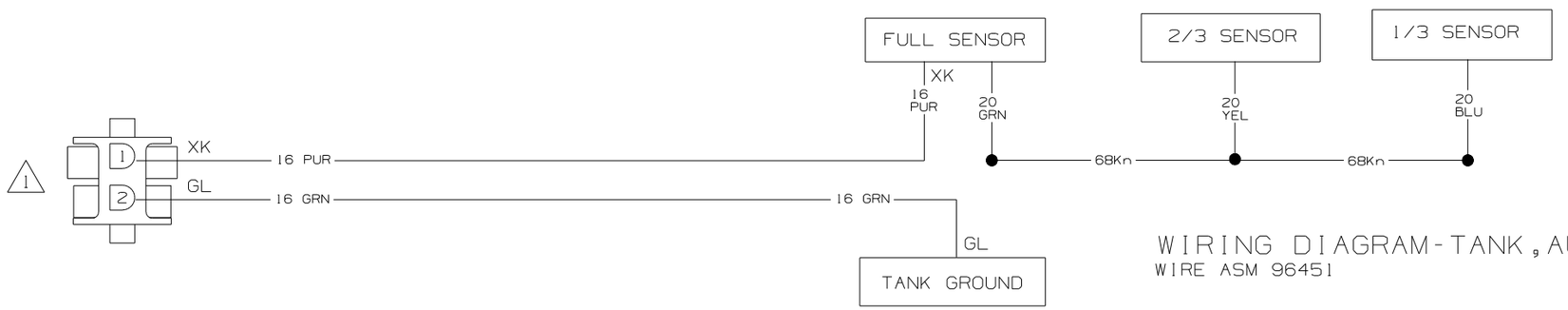

WIRING DIAGRAM-TANK, AUX HOLDING
WIRE ASM 96451

COPYRIGHT 2002
WINNEBAGO
INDUSTRIES, INC.

DFTR	ORIG. DATE
CHKR	ALL DIMENSIONS ARE IN MILLIMETERS
P.E.	
M.E.	FIRST USED
DSNR	03 SERIES

UNSPECIFIED TOLERANCES ARE:
WHOLE DIM (X) :
ONE-PLACE (X.X) :
TWO-PLACE (X.XX) :
ANGLE :

MATERIAL:

THIRD ANGLE PROJECTION

DO NOT SCALE DRAWING

TITLE: WIRING DIAGRAM-HOLDING TANKS

SHEET 1 OF 1 | PART NO 110664

1. SEE WIRING DIAGRAM-BODY FOR ADDITIONAL INFORMATION.

NOTES:

DRAWING NO.	MODELS	SHEET
144995-01	P-SERIES	1
144995-02	Q-SERIES	2
144995-02	S-SERIES	3

RELEASE	REV A	DATE	DWG NO 144995

REV	ZONE	REVISION RECORD	DATE	DFTR-ORIG

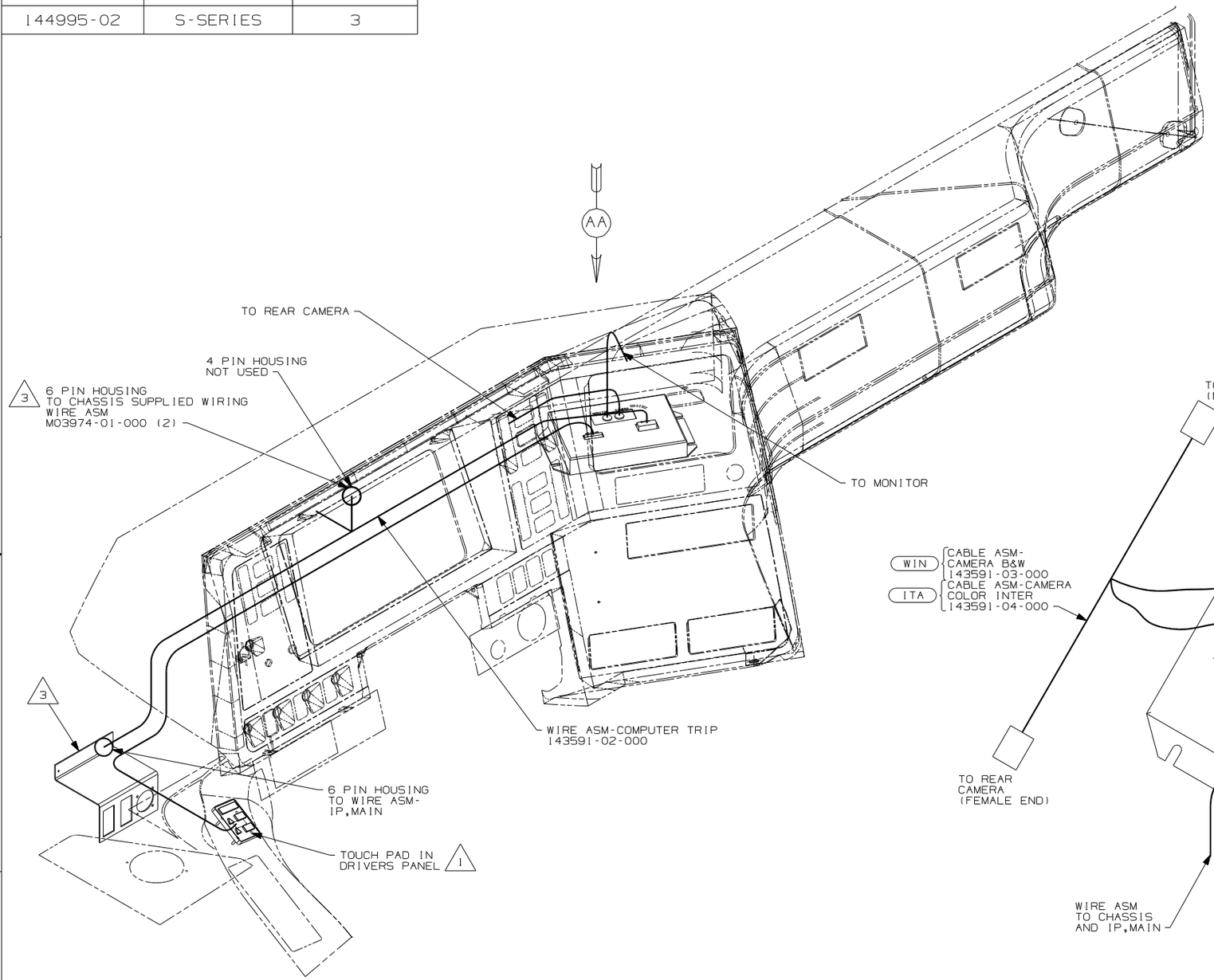

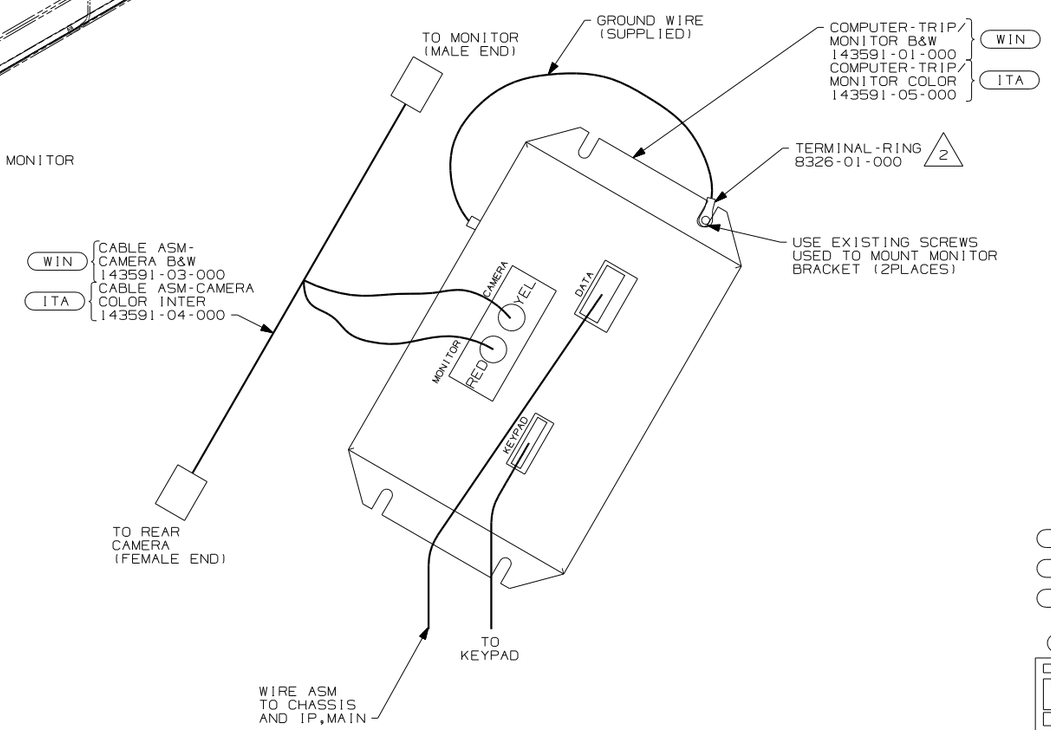

VIEW AA

ITA ITASCA ONLY

WIN WINNEBAGO ONLY

42V VDC/SWITCHING SYSTEM

3 REMOVE TRIP TEK'S 6 POSITION HOUSING, LOCATE THE CHASSIS DIAGNOSTIC CONNECTOR AND SPLICE AT LEAST 150MM FROM CONNECTOR INTO THE TWISTED PAIR CIRCUITS WITH CONNECTOR 58028-01-000 AS FOLLOWS: FREIGHTLINER (MMDC WIRING)-RED TO GREEN, WHITE TO ORANGE. WORKHORSE DIESEL PUSHER-RED TO TAN/BLK, WHITE TO WHT/BLK.

2 ADD RING TERMINAL TO EXISTING GROUND AND MOUNT UNDER COMPUTER MOUNTING SCREW.

1 USE VENDER SUPPLIED NUTS.

NOTES:

42V P-SERIES

WINNEBAGO INDUSTRIES

COPYRIGHT 2004
WINNEBAGO
INDUSTRIES, INC.

DFTR	ORIG. DATE
CHKR	ALL DIMENSIONS ARE IN MILLIMETERS
P.E.	
M.E.	FIRST USED
DSNR	04 P,Q&S SER

UNSPECIFIED TOLERANCES ARE:
WHOLE DIM (X) :
ONE-PLACE (X.X) : 1.0
TWO-PLACE (X.XX) : 0.50
ANGLE :

MATERIAL:

THIRD ANGLE PROJECTION

DO NOT SCALE DRAWING

TITLE:
WIRING INSTL-TRIP COMPUTER

SHEET 1 OF 3 PART NO 144995

DWG NO 144995

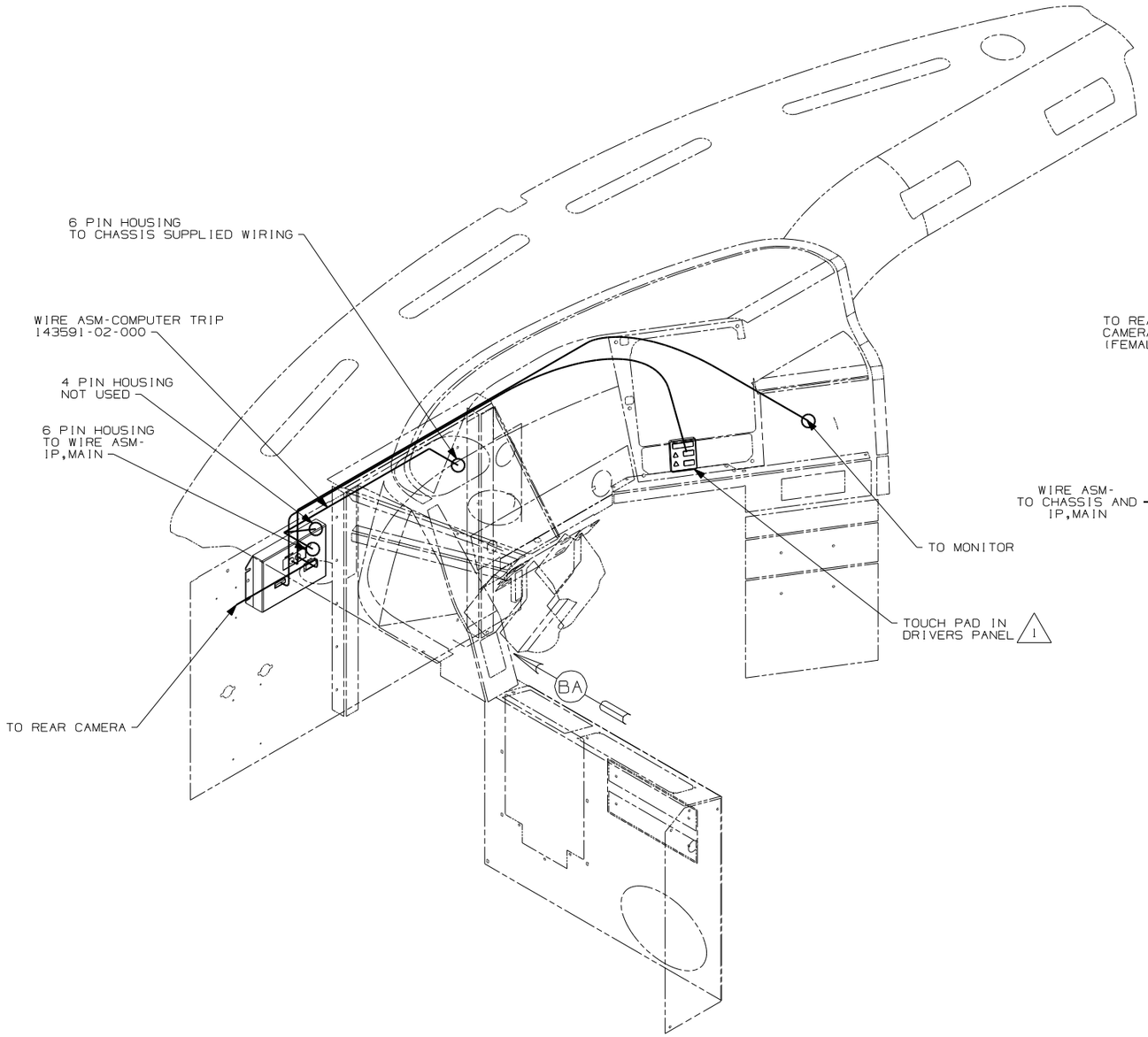

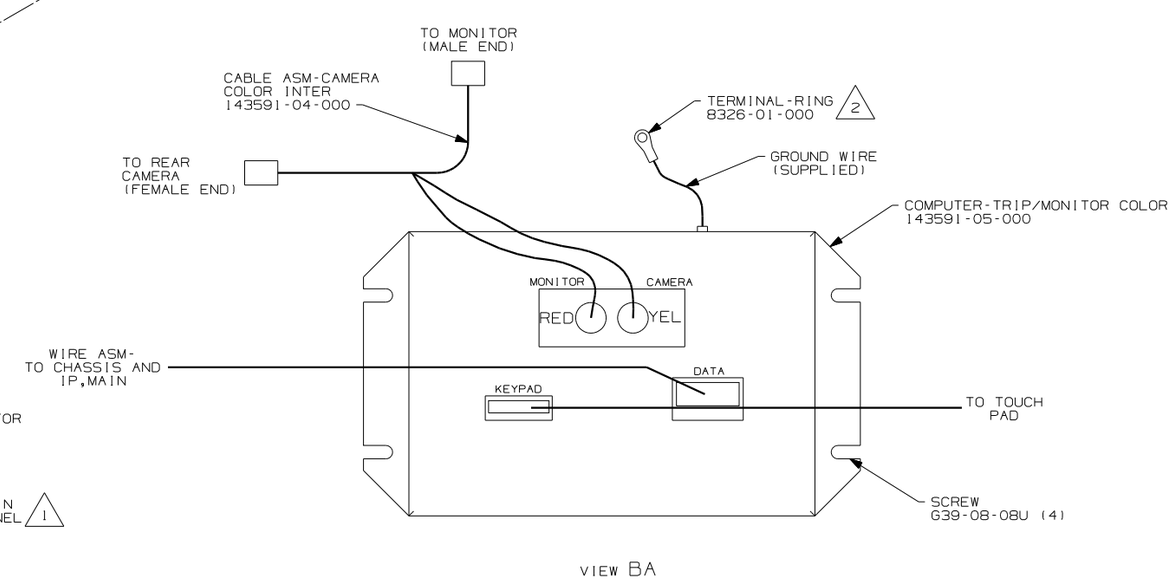

VIEW BA

2 ATTACH RING TERMINAL TO GROUND STUD NEAR STEERING COLUMN.

1 USE VENDER SUPPLIED NUTS.

NOTES:

42V VCR/SWITCHING SYSTEM

42V Q-SERIES

FIRST USED 04 P, Q&S SER

DO NOT SCALE DRAWING

TITLE: WIRING INSTL-TRIP COMPUTER

SHEET 2 PART NO 144995

DWG NO 144995

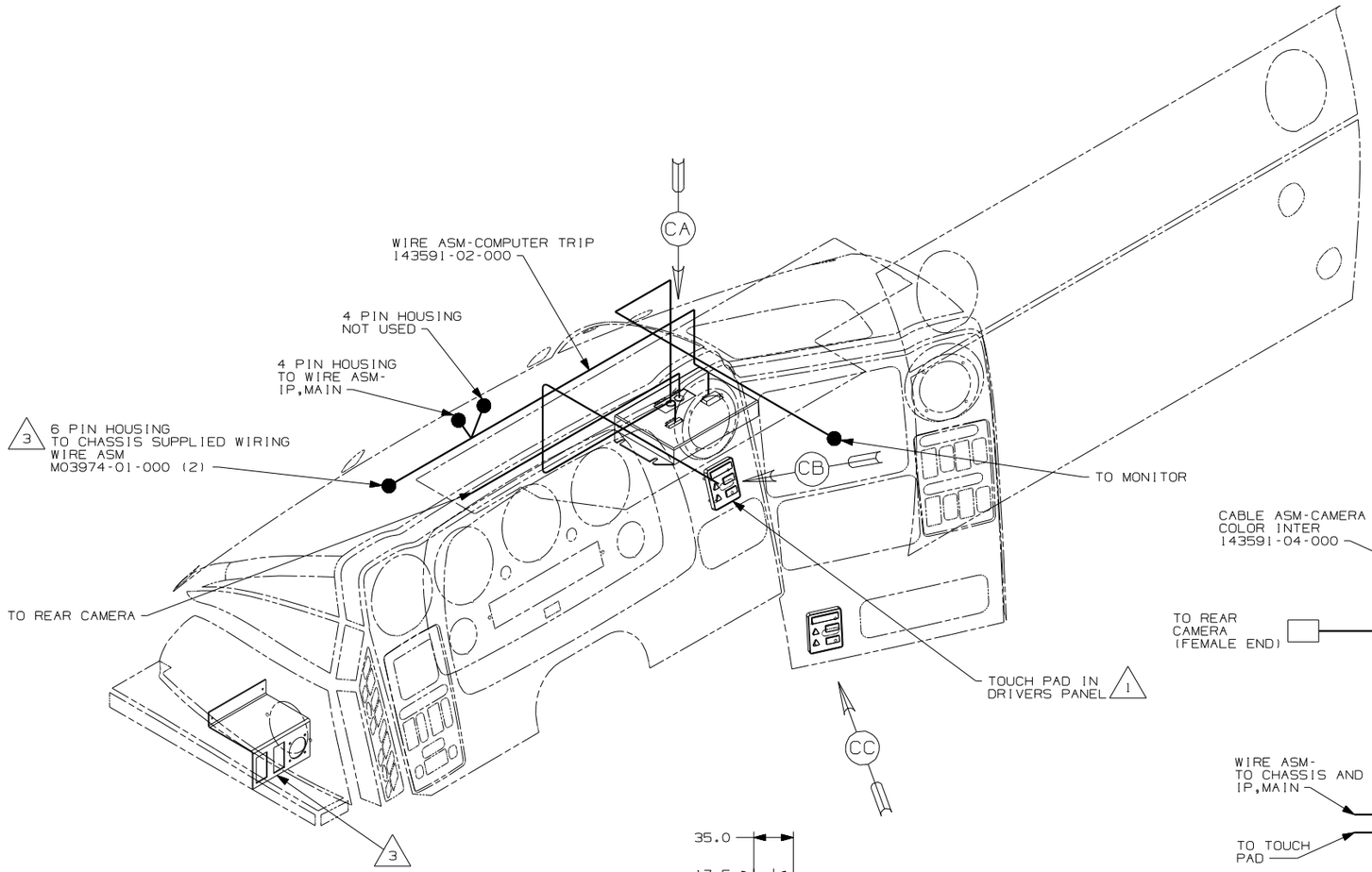

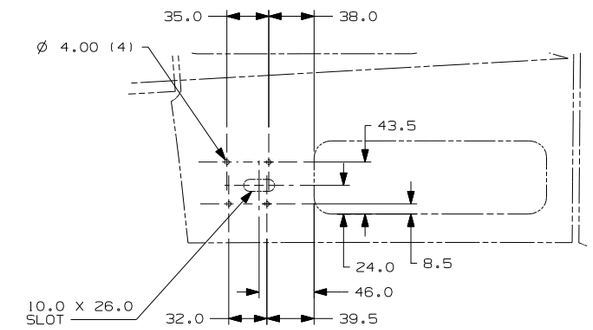

VIEW CC 5

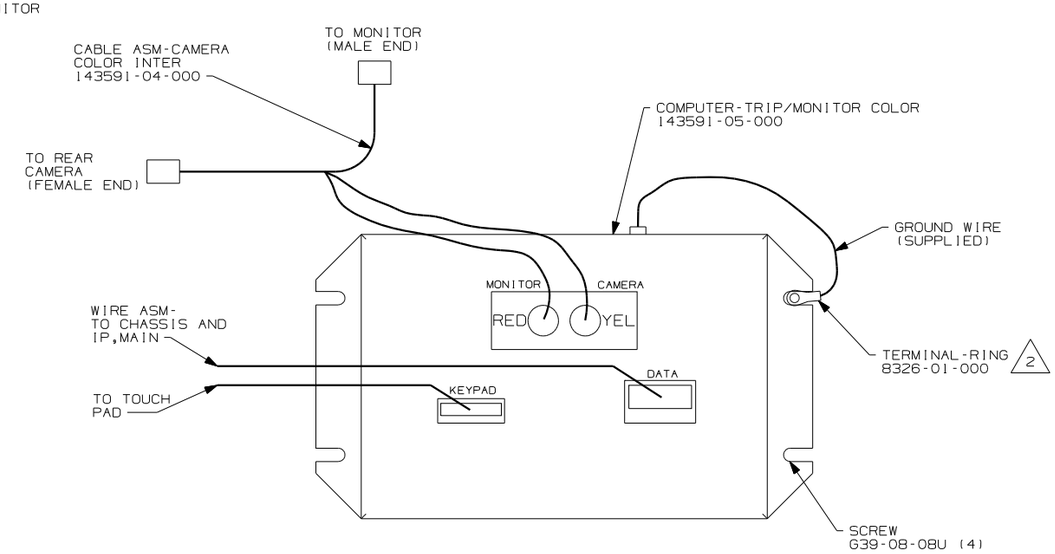

VIEW CA

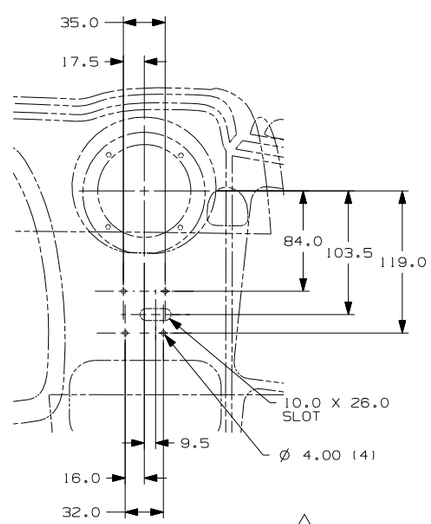

VIEW CB 4

5 LOCATION ON CHASSIS W/MMDC WIRING

4 LOCATION ON CHASSIS W/SYSTEM 3 WIRING

3 REMOVE TRIP TEK'S 6 POSITION HOUSING, LOCATE THE CHASSIS DIAGNOSTIC CONNECTOR AND SPLICE AT LEAST 150MM FROM CONNECTOR INTO THE TWISTED PAIR CIRCUITS WITH CONNECTOR 58028-01-000 AS FOLLOWS: FREIGHTLINER (MMDC WIRING)-RED TO GREEN, WHITE TO ORANGE. WORKHORSE DIESEL PUSHER-RED TO TAN/BLK, WHITE TO WHT/BLK.

2 ADD RING TERMINAL TO EXISTING GROUND AND MOUNT UNDER COMPUTER MOUNTING SCREW.

1 USE VENDOR SUPPLIED NUTS.

NOTES:

X-X FOR ELECTRICAL CALLOUTS SEE DWG NO. 121339-01-000

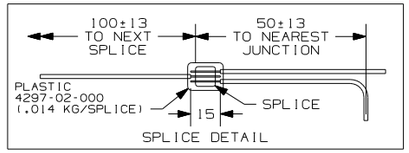

SPLICE DETAIL

42V VCR/SWITCHING SYSTEM

42V S-SERIES

FIRST USED 04 P,Q&S SER

DO NOT SCALE DRAWING

TITLE: WIRING INSTL-TRIP COMPUTER

SHEET 3 PART NO 144995

RELEASE	REV A	DATE	DWG NO 110138

REV	ZONE	REVISION RECORD	DATE	DFTR-ORIG

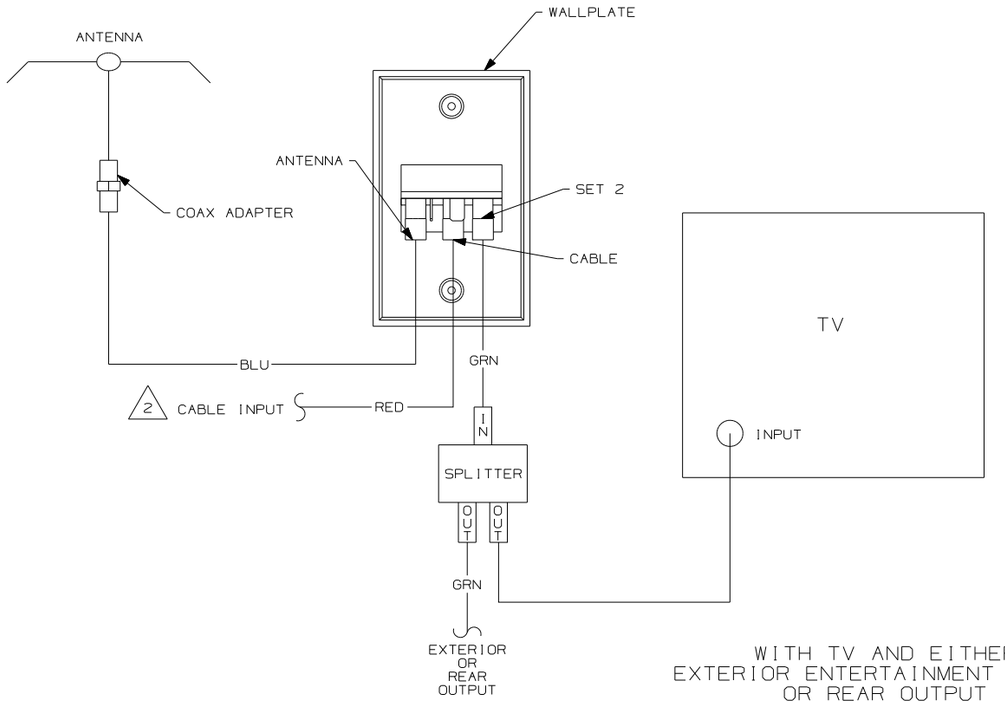

WITH TV AND EITHER EXTERIOR ENTERTAINMENT CENTER OR REAR OUTPUT

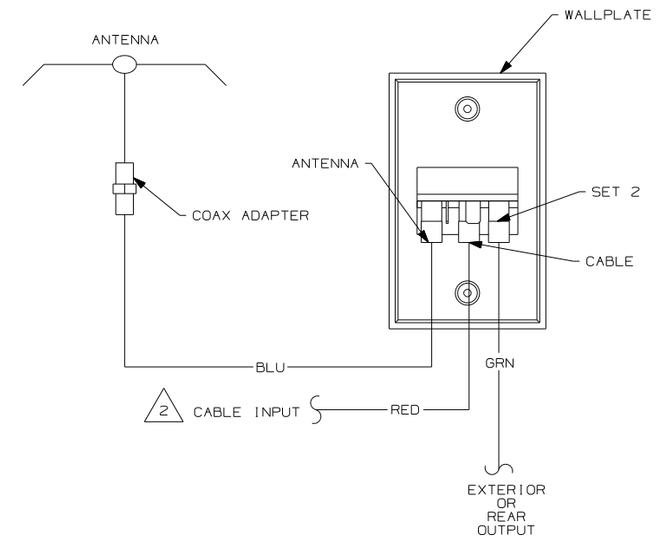

WITH EITHER EXTERIOR ENTERTAINMENT CENTER OR REAR OUTPUT

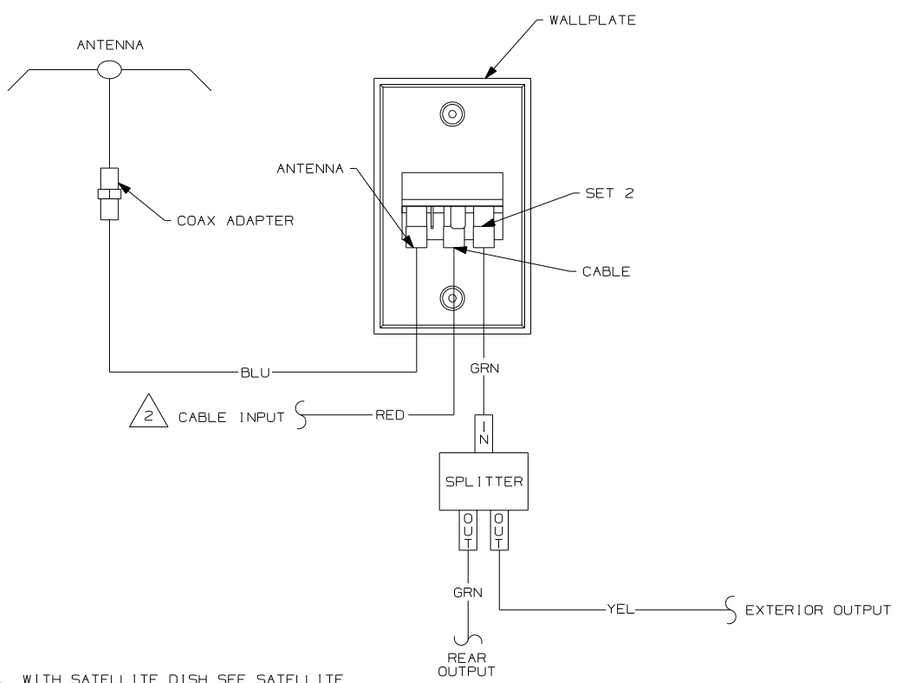

WITH EXTERIOR ENTERTAINMENT CENTER AND REAR OUTPUT

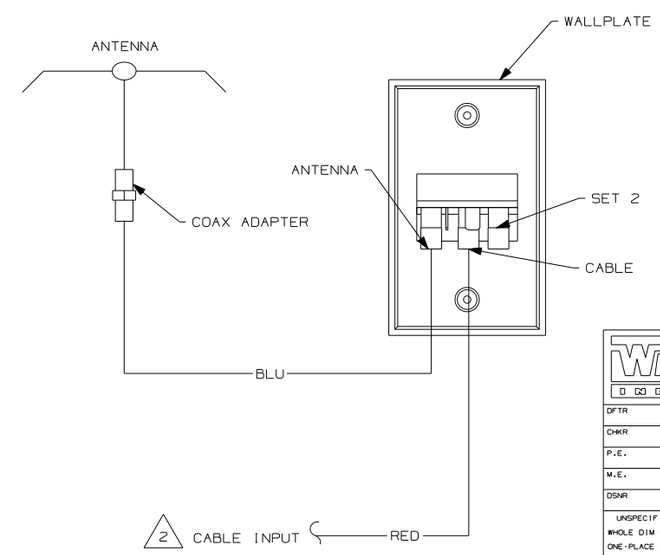

WITHOUT EITHER EXTERIOR ENTERTAINMENT CENTER OR REAR OUTPUT

NOTES:

2 WITH SATELLITE DISH SEE SATELLITE DISH VIEW SHT 2 BOTTOM LEFT.

1 COLOR INDICATES IDENTIFICATION TAPE.

WINNEBAGO INDUSTRIES

COPYRIGHT 2002 WINNEBAGO INDUSTRIES, INC.

DFTR	ORIG. DATE
CHKR	ALL DIMENSIONS ARE IN MILLIMETERS
P.E.	
M.E.	FIRST USED
DSNR	93 MOTORHAMES

UNSPECIFIED TOLERANCES ARE:
WHOLE DIM (X) :
ONE-PLACE (X.X) :
TWO-PLACE (X.XX) :
ANGLE :

THIRD ANGLE PROJECTION

MATERIAL:

DO NOT SCALE DRAWING

TITLE: WIRING DIAGRAM-TV COAX

SHEET 1 OF 2 | PART NO 110138

REF: 1 04/29/03

DWG NO 110138

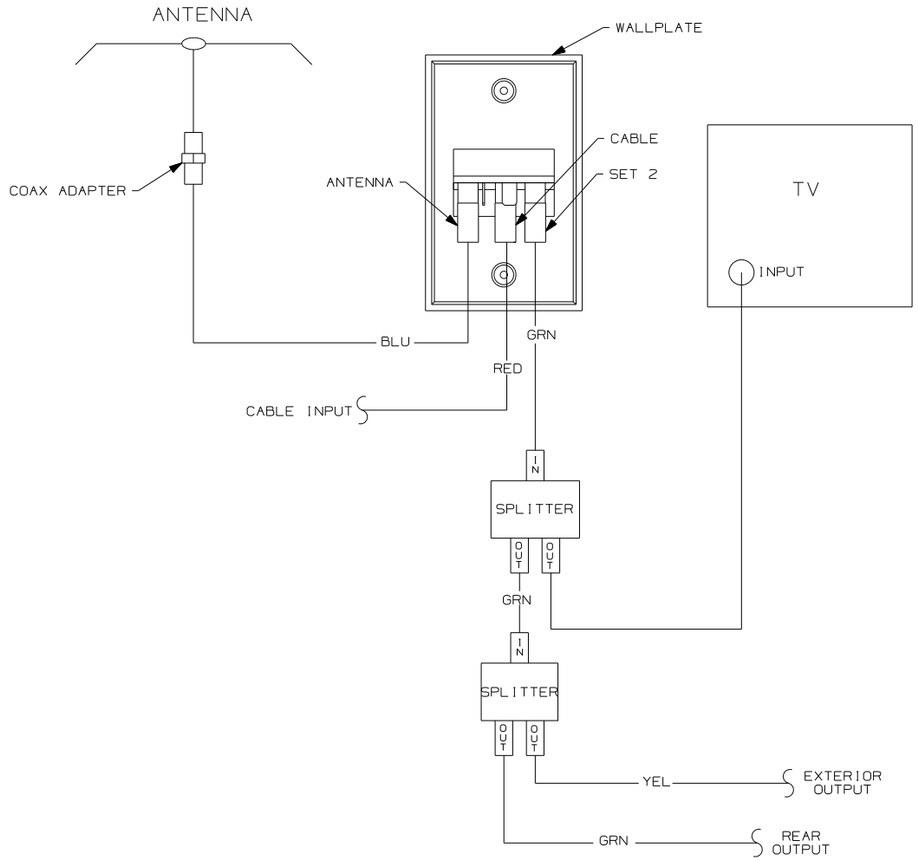

WITH TV,
EXTERIOR ENTERTAINMENT CENTER
AND REAR OUTPUT

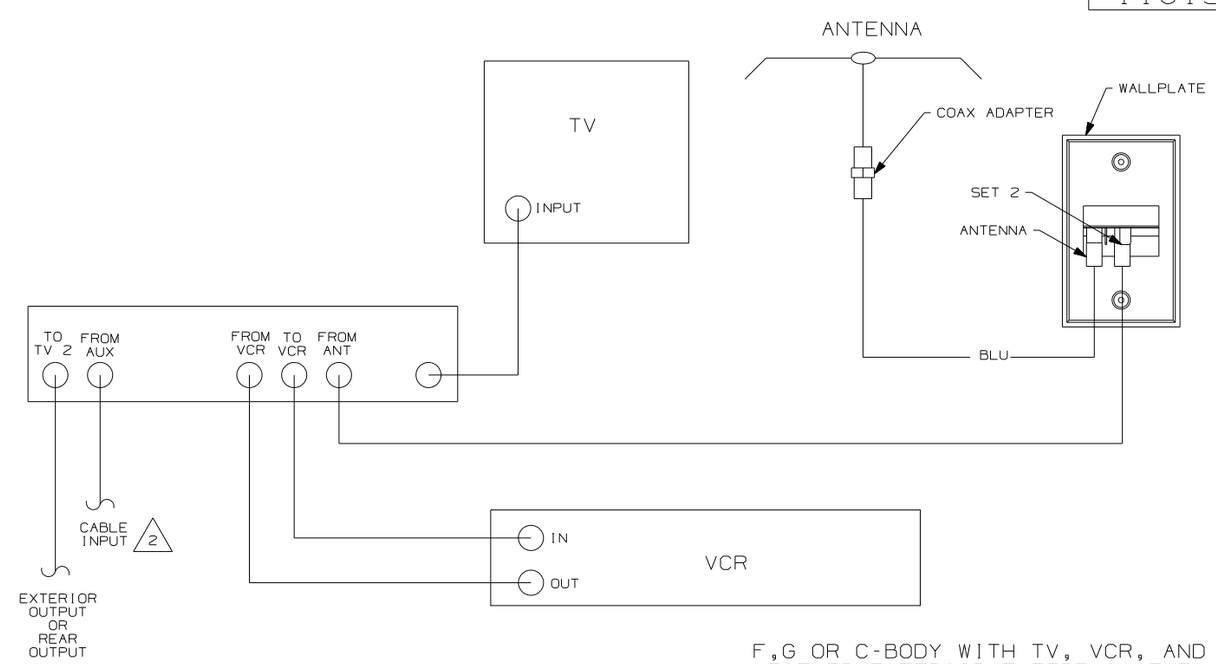

F,G OR C-BODY WITH TV, VCR, AND
EITHER EXTERIOR ENTERTAINMENT
CENTER OR REAR OUTPUT

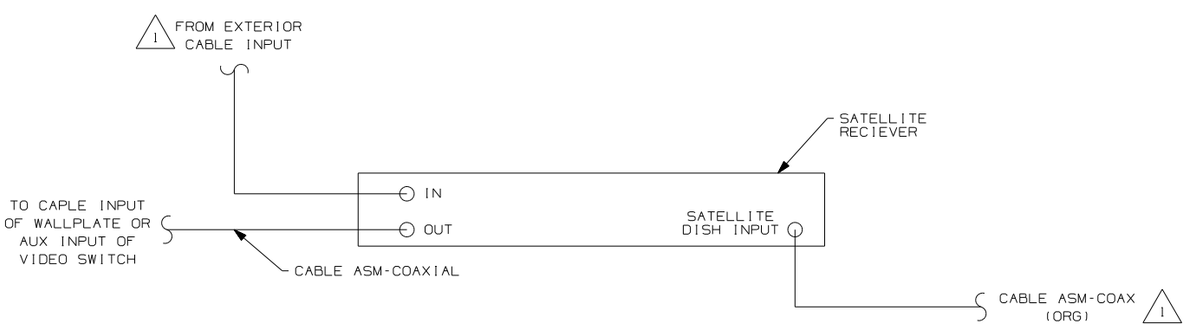

2 WITH SATELLITE DISH SEE SATELLITE DISH VIEW BOTTOM LEFT.

1 CONNECT TV COAX TO JACK ON FRONT OF WALLPLATE.

NOTES:

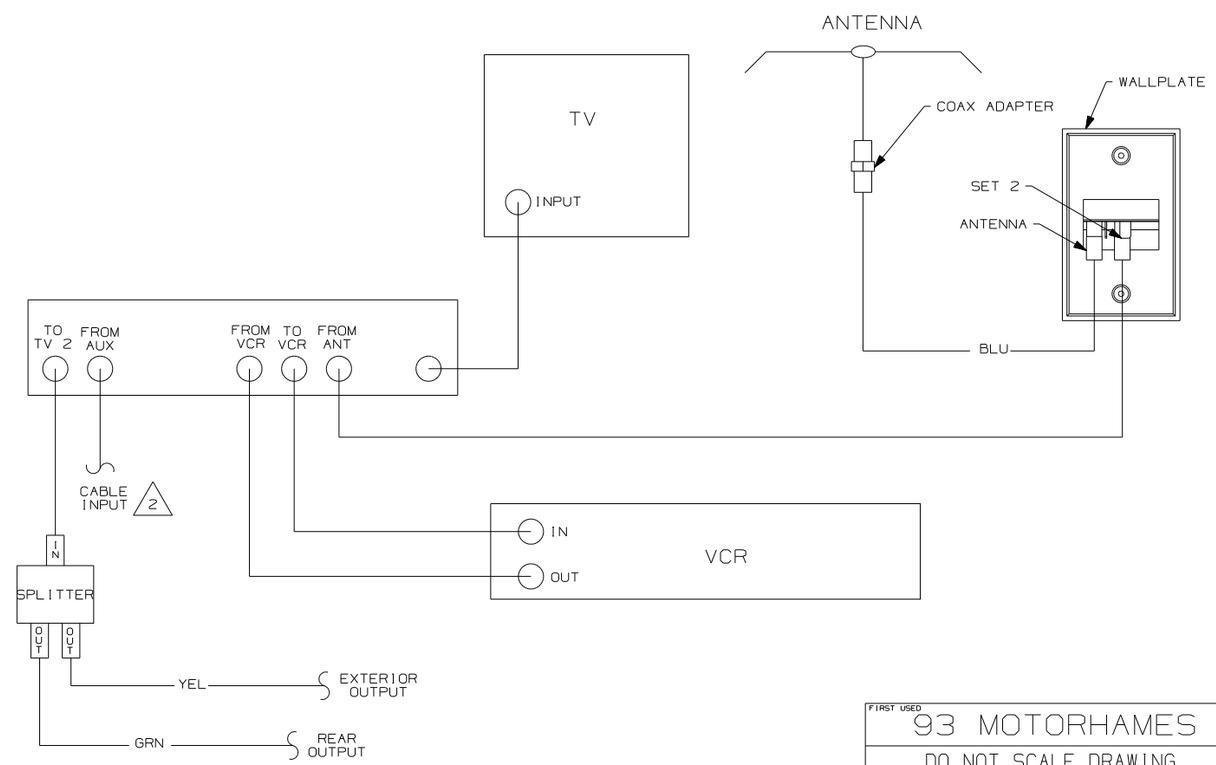

N,M OR P-SERIES WITH TV AND VCR OR
F,G OR C-BODY WITH TV, VCR, EXTERIOR
ENTERTAINMENT CENTER AND REAR OUTPUT

FIRST USED	93 MOTORHAMES
	DO NOT SCALE DRAWING
TITLE:	WIRING DIAGRAM-TV COAX
SHEET 2	PART NO 110138

DRAWING NO.	SHEET	UNIT
144832-01	1,7,8	D
144832-02	2,8	F
144832-03	3,8	G
144832-04	---	L
144832-05	4,8	P
144832-06	5,8	S
144832-07	6,9	Q

5

RELEASE	REV A	DATE	DWG NO 144832
REV	ZONE	REVISION RECORD	DATE / DFTR-ORIG

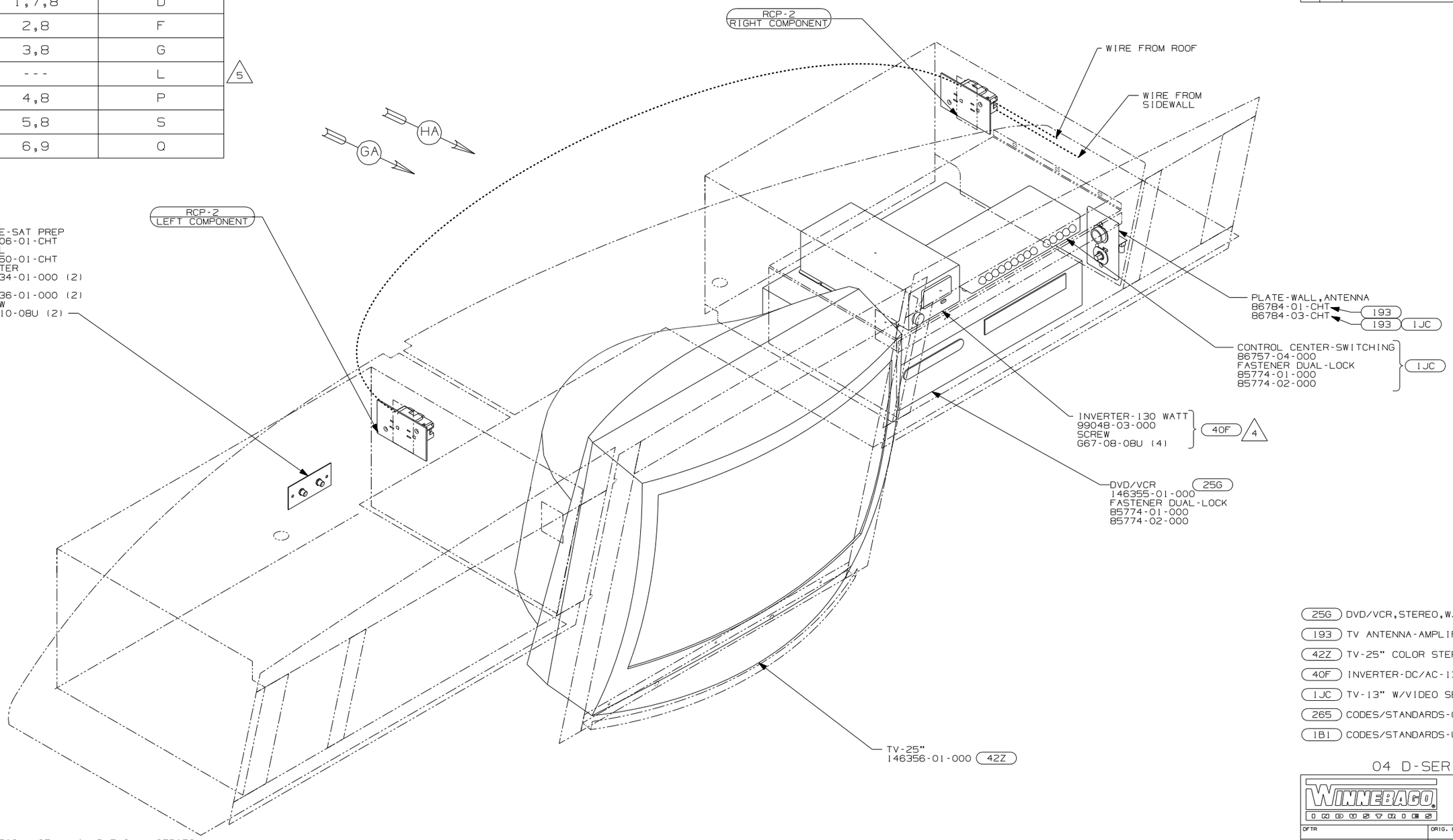

25G DVD/VCR,STEREO,W/REMOTE
193 TV ANTENNA-AMPLIFIED SYSTEM
42Z TV-25" COLOR STEREO
40F INVERTER-DC/AC-130 WATT
1JC TV-13" W/VIDEO SELECTION SYS
265 CODES/STANDARDS-CSA/CMVSS
1B1 CODES/STANDARDS-USA

04 D-SERIES

5 FRONT TV OPTION NOT AVAILABLE ON L-SERIES.

4 WHEN THE INVERTER IS USED IN CONJUNCTION WITH VINYL COVERED PANEL REMOVE FABRIC FROM HOLES SUPPLIED IN DIELECTRIC PANEL FOR VENTILATION.

3. WHERE WIRES PASS THROUGH HOLES IN STEEL AND NOT OTHERWISE PROTECTED, USE GROMMET 92908-02-000.

2. ALL WIRES TO BE SECURED WITH CLAMP 10495-01-000 OR CLIP 80734-01-000 EVERY 600MM. USE SCREW G39-10-12B UNLESS OTHERWISE SPECIFIED.

1. 110V WIRES TO BE SECURED WITH CLAMP 10497-05-000 & SCREW G39-10-12B OR TIE-WIRE MOUNT 92909-01-000 & TIE-WIRE 8343-03-000 WITHIN 200MM OF OUTLET BOXES.

NOTES:

X-X FOR ELECTRICAL CALLOUTS SEE DWG NO. 121339-01-000

WINNEBAGO INDUSTRIES
COPYRIGHT 2004 WINNEBAGO INDUSTRIES, INC.

DFTR | ORIG. DATE
CHKR | ALL DIMENSIONS ARE IN MILLIMETERS
P.E.
M.E. | FIRST USED 04 A-BODIES
DSNR

UNSPECIFIED TOLERANCES ARE:
WHOLE DIM (X) ±
ONE-PLACE (X.X) ±
TWO-PLACE (X.XX) ±
ANGLE ±
THIRD ANGLE PROJECTION
MATERIAL:

DO NOT SCALE DRAWING

TITLE: WIRING INSTL-TV/VCR,FRONT

SHEET 1 OF 9 | PART NO 144832

DWG NO 144832

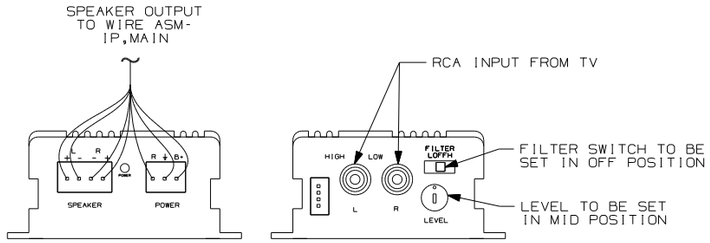

DETAIL BD

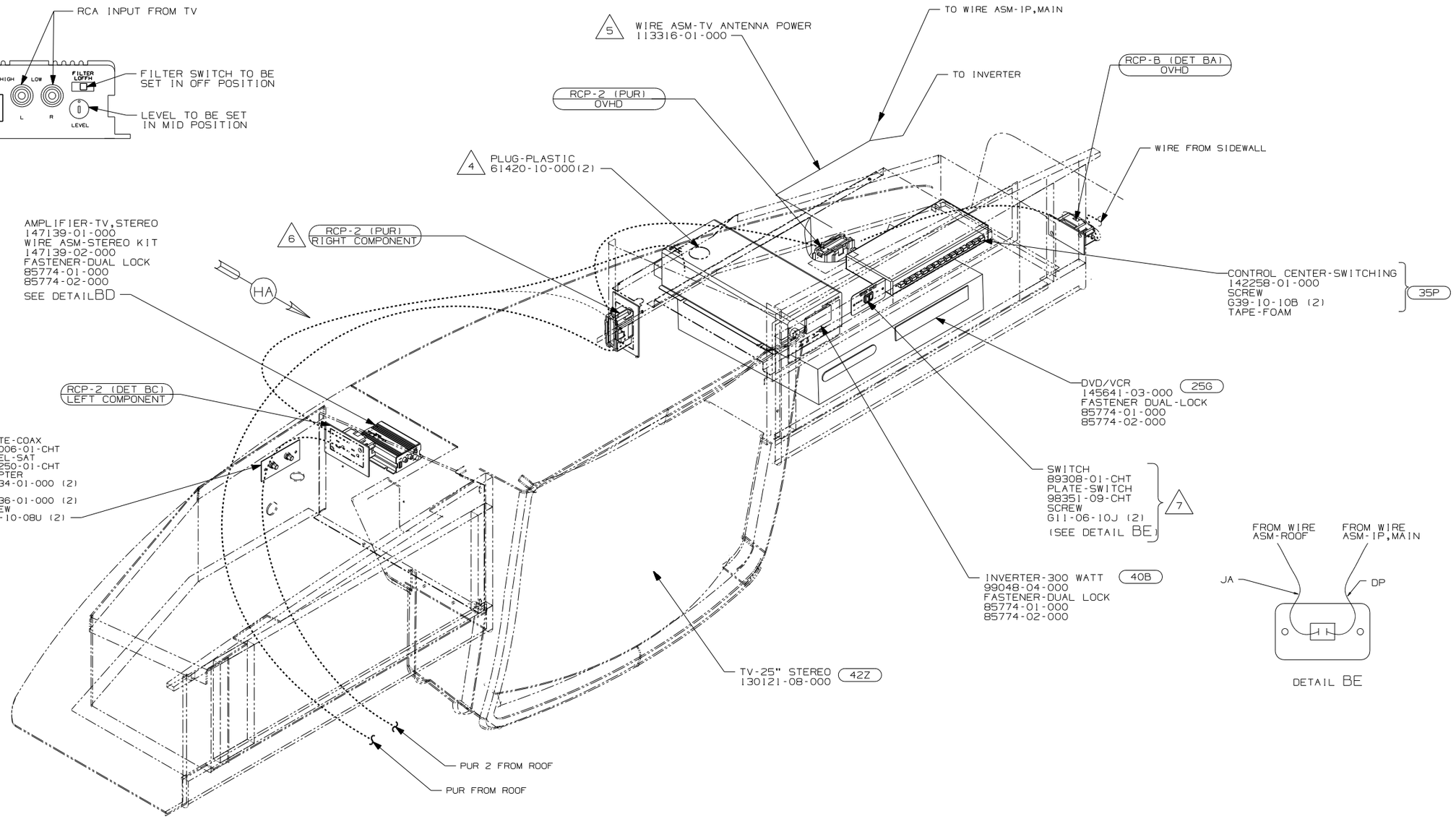

DETAIL BE

7 REMOVE VINYL FROM CUTOUT AT INSTALLATION.

6 CONNECT PURPLE-2 TO INVERTER WITH FEATURE 40B

5 FOR USE WITH SHELLS ONLY.

4 SLIT AS NEEDED TO RUN WIRES.

3. WHERE WIRES PASS THROUGH HOLES IN STEEL AND NOT OTHERWISE PROTECTED, USE GROMMET 92908-02-000.

2. ALL WIRES TO BE SECURED WITH CLAMP 10495-01-000 OR CLIP 80734-01-000 EVERY 600MM. USE SCREW G39-10-12B UNLESS OTHERWISE SPECIFIED.

1. 110V WIRES TO BE SECURED WITH CLAMP 10497-05-000 & SCREW G39-10-12B OR TIE-WIRE MOUNT 92909-01-000 & TIE-WIRE 8343-03-000 WITHIN 200MM OF OUTLET BOXES.

NOTES:

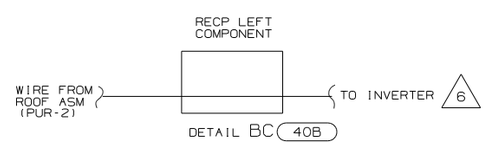

DETAIL BC 40B

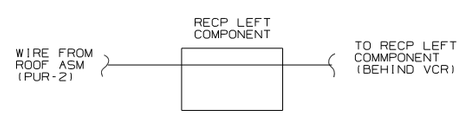

DETAIL BC

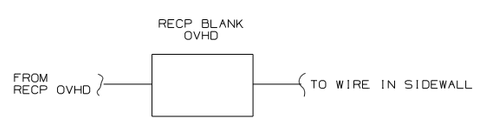

DETAIL BA

42Z TV-25" COLOR STEREO

40B INVERTER-DC/AC, 300 WATT

35P VIDEO SELECTION SYSTEM

25G DVD/VCR,STEREO,W/REMOTE

04 F-SERIES

X-X FOR DETAIL CALLOUTS SEE DWG NO. 130375-01-000

FIRST USED: 04 A-BODIES

DO NOT SCALE DRAWING

TITLE: WIRING INSTL-TV/VCR,FRONT

SHEET 2

PART NO 144832

DWG NO 144832

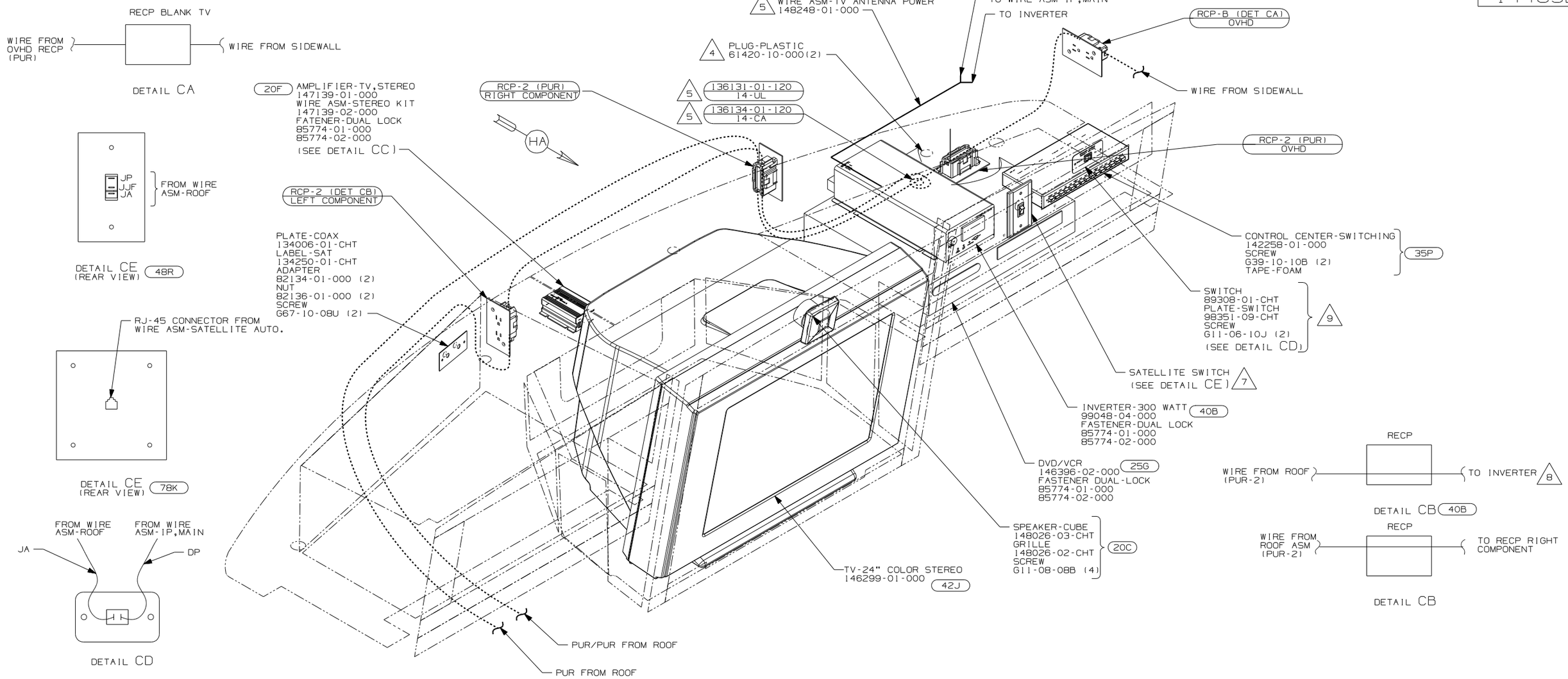

9 REMOVE VINYL FROM CUTOUT AT INSTALLATION.

8 CONNECT PURPLE-2 TO INVERTER WITH FEATURE 40B

7 SWITCH SUPPLIED WITH SATELLITE DISH, SEE WIRING INSTL-BODY,12V FOR ADDITIONAL INFORMATION.

6 NOT USED WITH FEATURE 20C

5 FOR USE WITH SHELLS ONLY.

4 SLIT AS NEEDED TO RUN WIRES.

3. WHERE WIRES PASS THROUGH HOLES IN STEEL AND NOT OTHERWISE PROTECTED, USE GROMMET 92908-02-000.

2. ALL WIRES TO BE SECURED WITH CLAMP 10495-01-000 OR CLIP 80734-01-000 EVERY 600MM. USE SCREW G39-10-12B UNLESS OTHERWISE SPECIFIED.

1. 110V WIRES TO BE SECURED WITH CLAMP 10497-05-000 & SCREW G39-10-12B OR TIE-WIRE MOUNT 92909-01-000 & TIE-WIRE 8343-03-000 WITHIN 200MM OF OUTLET BOXES.

NOTES:

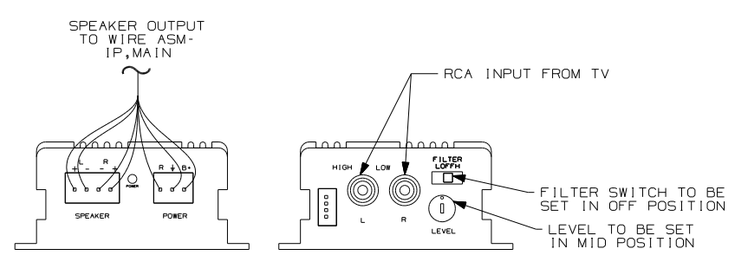

20F DETAIL CC 6

78K SATELLITE DISH-AUTOMATIC
48R SAT SYS IN-MOTION W/O RCVR
42J TV-24" COLOR,STEREO W/REMOTE
40B INVERTER-DC/AC, 300 WATT
35P VIDEO SELECTION SYSTEM
25G DVD/VCR,STEREO,W/REMOTE
20F DELUXE SOUND SYSTEM-WITHOUT
20C SOUND SYS. DLX. W/O-SURROUND

X-X FOR ELECTRICAL CALLOUTS SEE DWG NO. 121339-01-000

04 G-SERIES

FIRST USED 04 A-BODIES

DO NOT SCALE DRAWING

TITLE: WIRING INSTL-TV/VCR,FRONT

SHEET 3 PART NO 144832

DWG NO 144832

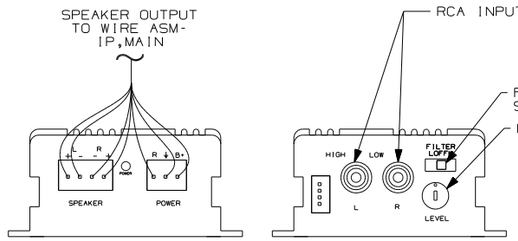

20F DETAIL DA 5

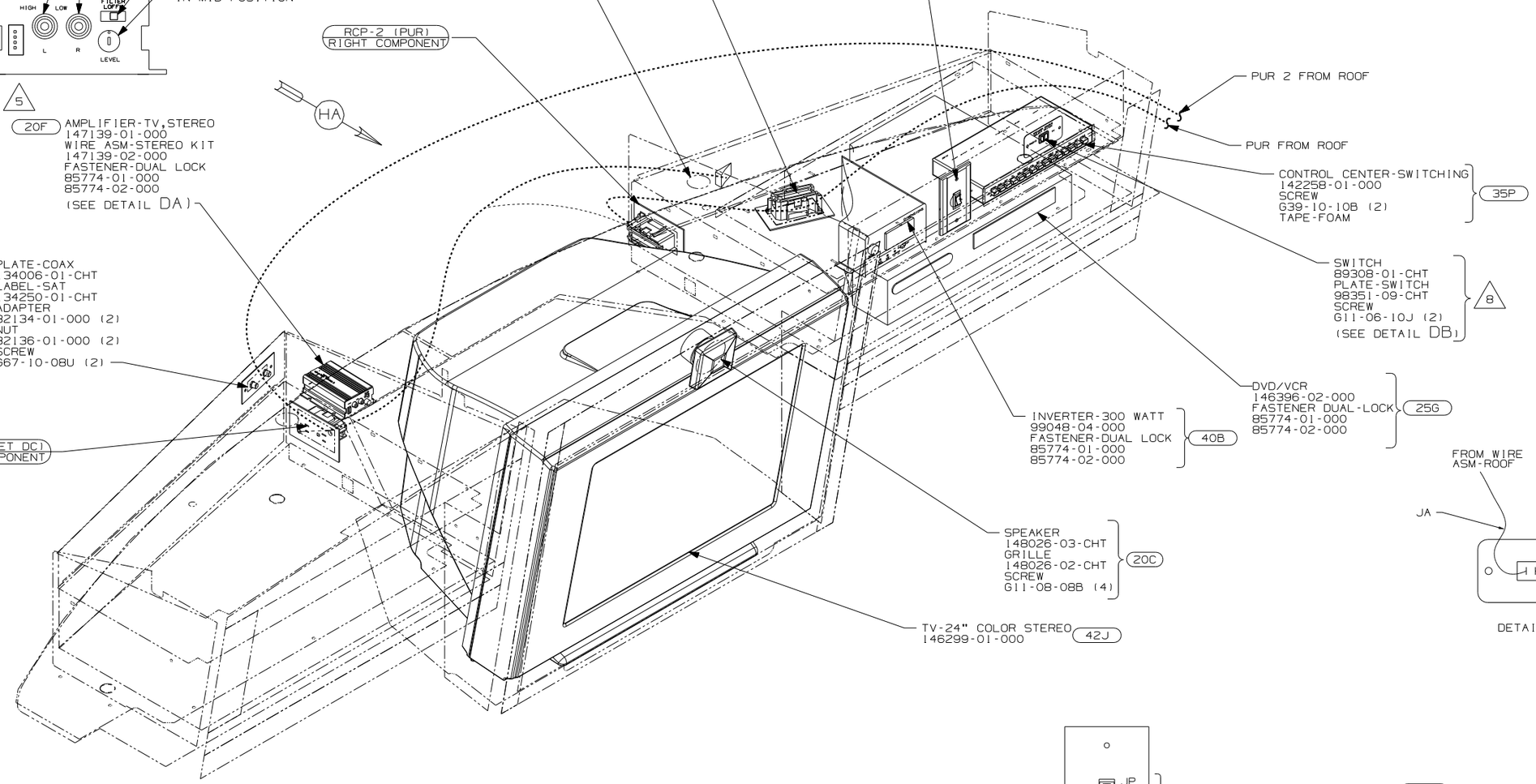

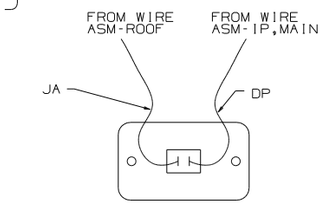

DETAIL DB

8 REMOVE VINYL FROM CUTOUT AT INSTALLATION.

7 CONNECT PURPLE-2 TO INVERTER WITH FEATURE 40B

6 SWITCH SUPPLIED WITH SATELLITE DISH, SEE WIRING INSTL-BODY,12V FOR ADDITIONAL INFORMATION.

5 NOT USED WITH FEATURE 20C

4 SLIT AS NEEDED TO RUN WIRES.

3. WHERE WIRES PASS THROUGH HOLES IN STEEL AND NOT OTHERWISE PROTECTED, USE GROMMET 92908-02-000.

2. ALL WIRES TO BE SECURED WITH CLAMP 10495-01-000 OR CLIP 80734-01-000 EVERY 600MM. USE SCREW G39-10-12B UNLESS OTHERWISE SPECIFIED.

1. 110V WIRES TO BE SECURED WITH CLAMP 10497-05-000 & SCREW G39-10-12B OR TIE-WIRE MOUNT 92909-01-000 & TIE-WIRE 8343-03-000 WITHIN 200MM OF OUTLET BOXES.

NOTES:

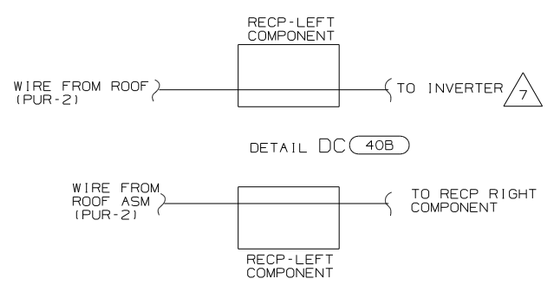

DETAIL DC 40B

DETAIL DC 79J

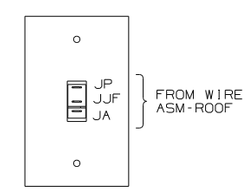

DETAIL DE (REAR VIEW) 48R

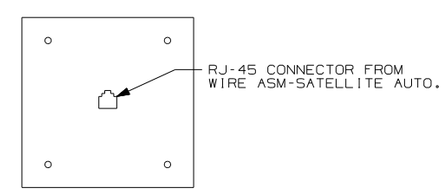

DETAIL DE (REAR VIEW) 78K

79J INVERTER/CHARGER-1,500 WATT
78K SATELLITE DISH-AUTOMATIC
48R SAT SYS IN-MOTION W/O RCVR
42J TV-24" COLOR,STEREO W/REMOTE
40B INVERTER-DC/AC, 300 WATT
35P VIDEO SELECTION SYSTEM
25G DVD/VCR,STEREO,W/REMOTE
20F DELUXE SOUND SYSTEM-WITHOUT
20C SOUND SYS. DLX. W/O-SURROUND

04 P-SERIES

FIRST USED 04 A-BODIES

DO NOT SCALE DRAWING

TITLE: WIRING INSTL-TV/VCR,FRONT

SHEET 4 PART NO 144832

DWG NO 144832

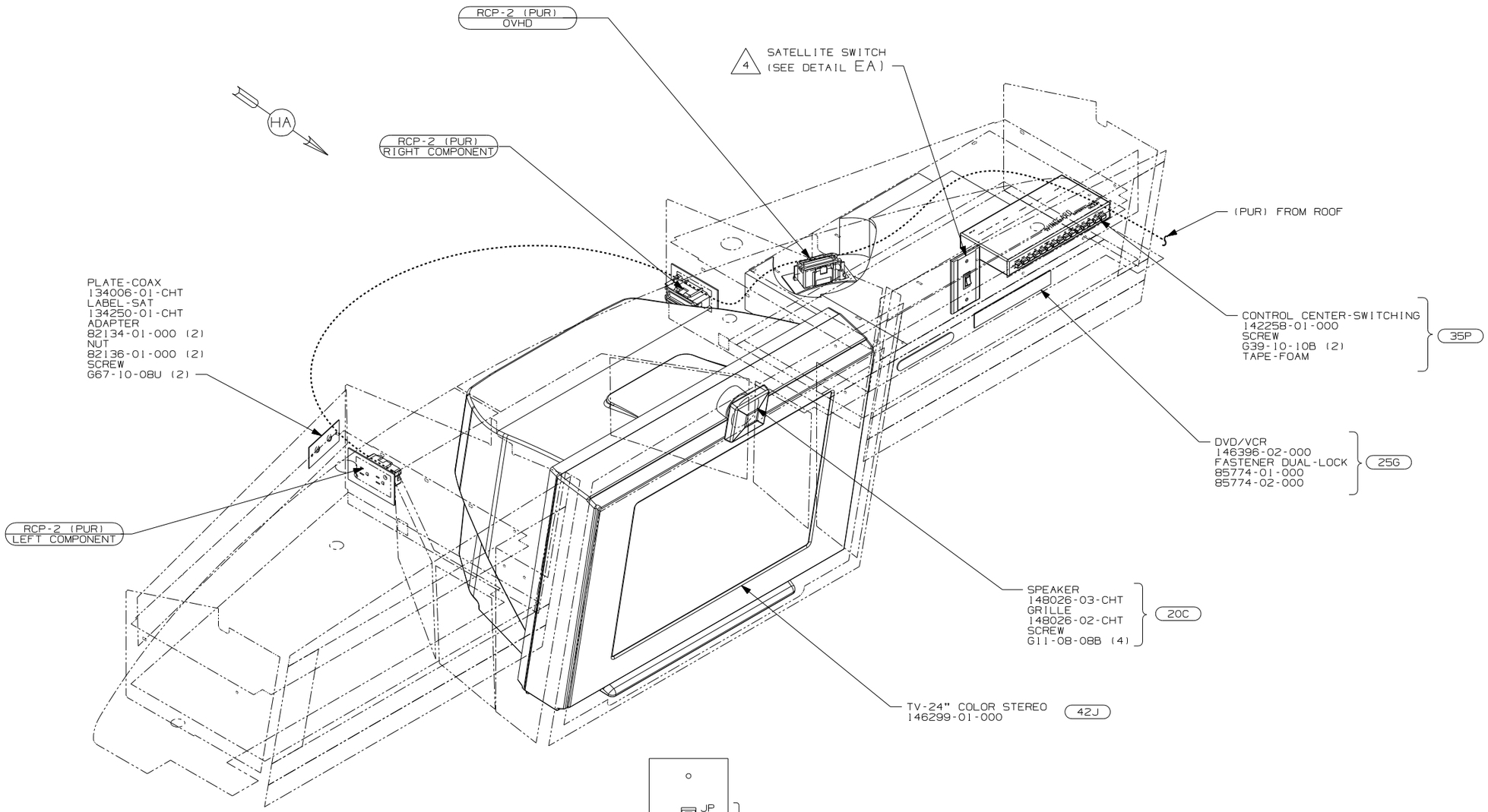

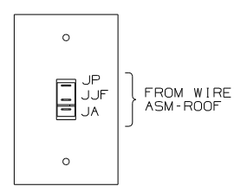

DETAIL EA (REAR VIEW) 48R

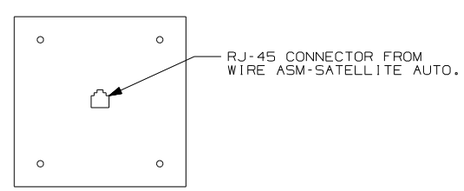

DETAIL EA (REAR VIEW) 78K

78K SATELLITE DISH-AUTOMATIC
48R SAT SYS IN-MOTION W/O RCVR
42J TV-24" COLOR,STEREO W/REMOTE
35P VIDEO SELECTION SYSTEM
25G DVD/VCR,STEREO,W/REMOTE
20C SOUND SYS. DLX. W/O-SURROUND

NOTES:

4. SWITCH SUPPLIED WITH SATELLITE DISH, SEE WIRING INSTL-BODY,12V FOR ADDITIONAL INFORMATION.

3. WHERE WIRES PASS THROUGH HOLES IN STEEL AND NOT OTHERWISE PROTECTED, USE GROMMET 92908-02-000.

2. ALL WIRES TO BE SECURED WITH CLAMP 10495-01-000 OR CLIP 80734-01-000 EVERY 600MM. USE SCREW G39-10-12B UNLESS OTHERWISE SPECIFIED.

1. 110V WIRES TO BE SECURED WITH CLAMP 10497-05-000 & SCREW G39-10-12B OR TIE-WIRE MOUNT 92909-01-000 & TIE-WIRE 8343-03-000 WITHIN 200MM OF OUTLET BOXES.

04 S-SERIES

FIRST USED 04 A-BODIES

DO NOT SCALE DRAWING

TITLE: WIRING INSTL-TV/VCR,FRONT

SHEET 5 PART NO 144832

DWG NO 144832

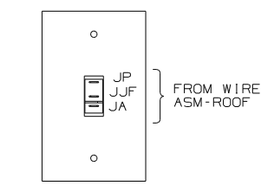

DETAIL FB (REAR VIEW) 48R

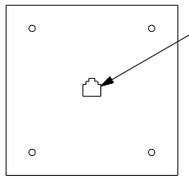

RJ-45 CONNECTOR FROM WIRE ASM-SATELLITE AUTO.

DETAIL FB (REAR VIEW) 78K

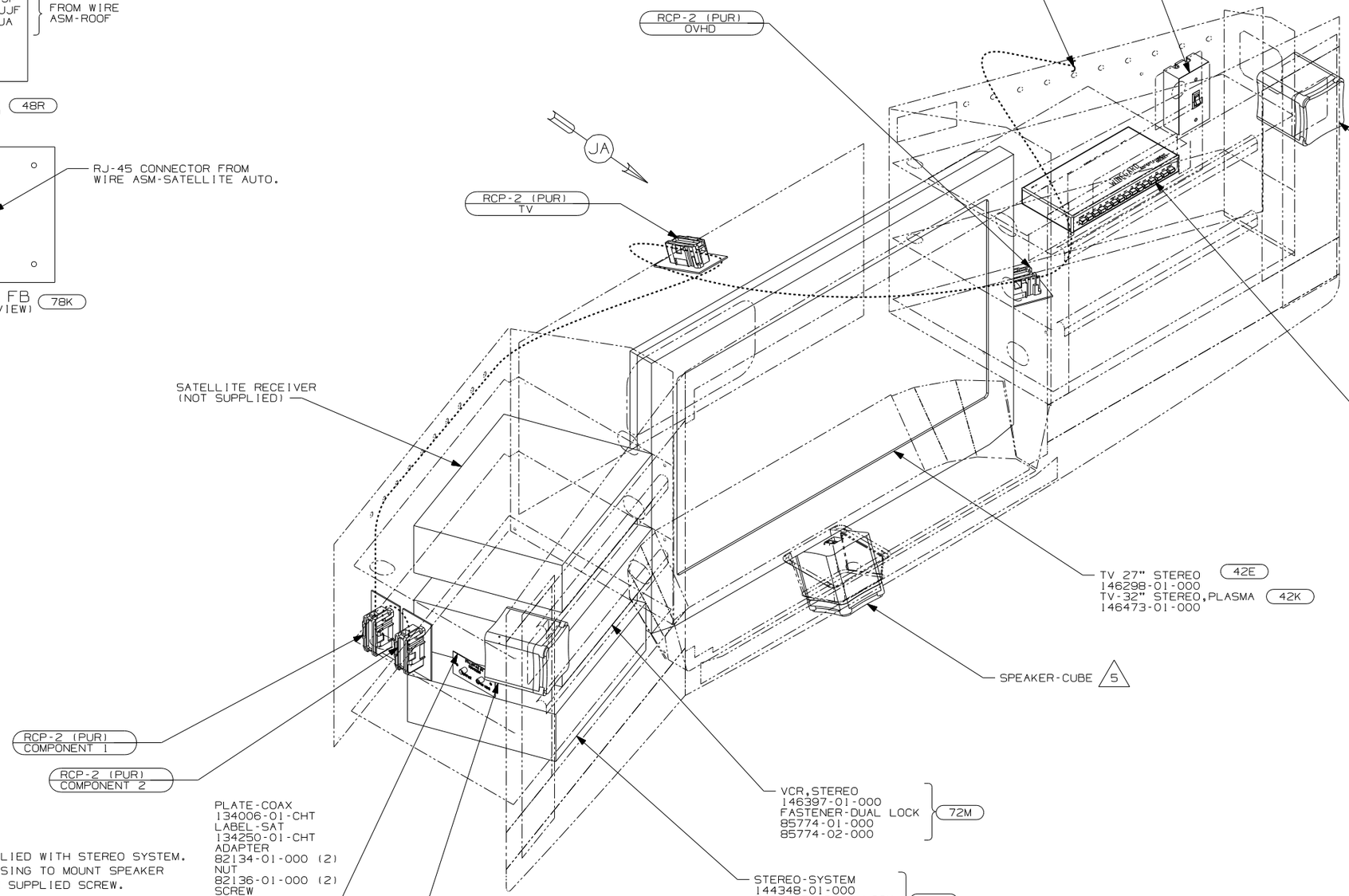

5 SPEAKER IS SUPPLIED WITH STEREO SYSTEM. REMOVE REAR HOUSING TO MOUNT SPEAKER IN CABINET WITH SUPPLIED SCREW.

4 SWITCH SUPPLIED WITH SATELLITE DISH, SEE WIRING INSTL-BODY,12V FOR ADDITIONAL INFORMATION.

3 SPEAKER IS SUPPLIED WITH STEREO SYSTEM. REMOVE REAR HOUSING TO MOUNT SPEAKER IN CABINET WITH SCREWS CALLED OUT.

2. ALL WIRES TO BE SECURED WITH CLAMP 10495-01-000 OR CLIP 80734-01-000 EVERY 600MM. USE SCREW G39-10-12B UNLESS OTHERWISE SPECIFIED.

1. 110V WIRES TO BE SECURED WITH CLAMP 10497-05-000 & SCREW G39-10-12B OR TIE-WIRE MOUNT 92909-01-000 & TIE-WIRE 8343-03-000 WITHIN 200MM OF OUTLET BOXES.

NOTES:

78K SATELLITE DISH-AUTOMATIC
72M VCR-STEREO
48R SAT SYS IN-MOTION W/O RCVR
42K TV-32" COLOR,STEREO W/REMOTE
42E TV-27" COLOR,STEREO W/REMOTE
35P VIDEO SELECTION SYSTEM
21V SOUND SYSTEM DELUXE

04 Q-SERIES ADVANTAGE

FIRST USED 04 A-BODIES

DO NOT SCALE DRAWING

TITLE: WIRING INSTL-TV/VCR,FRONT

SHEET 6 PART NO 144832

DWG NO 144832

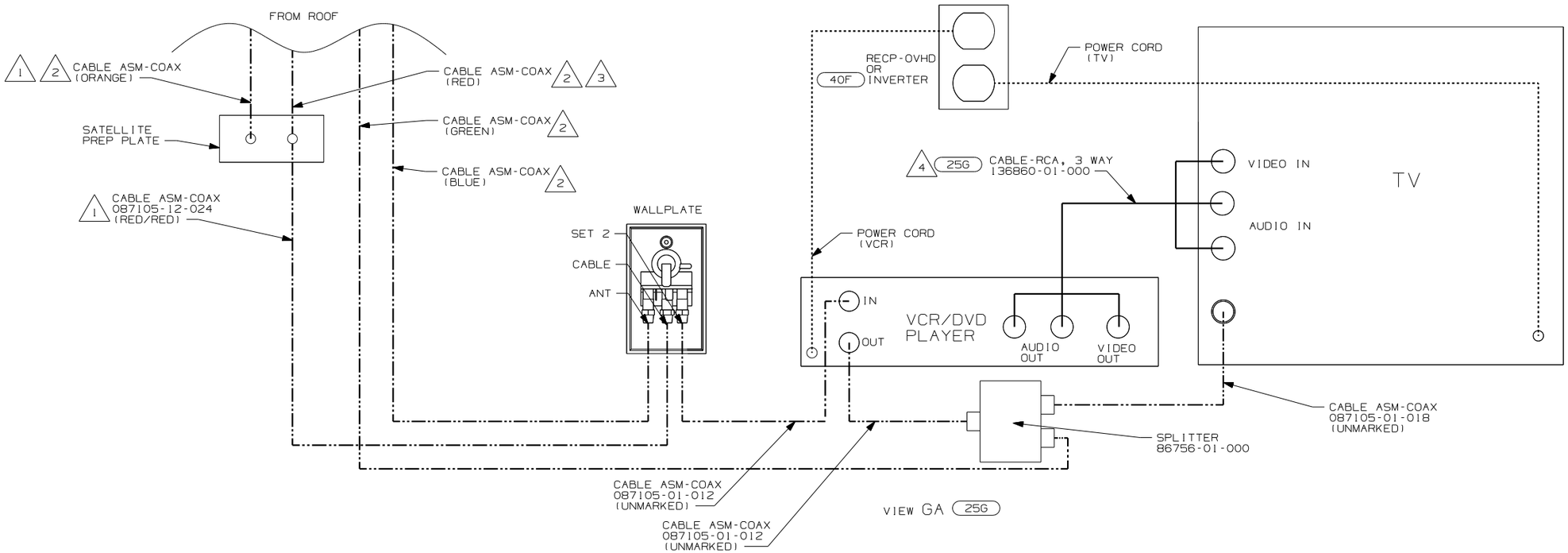

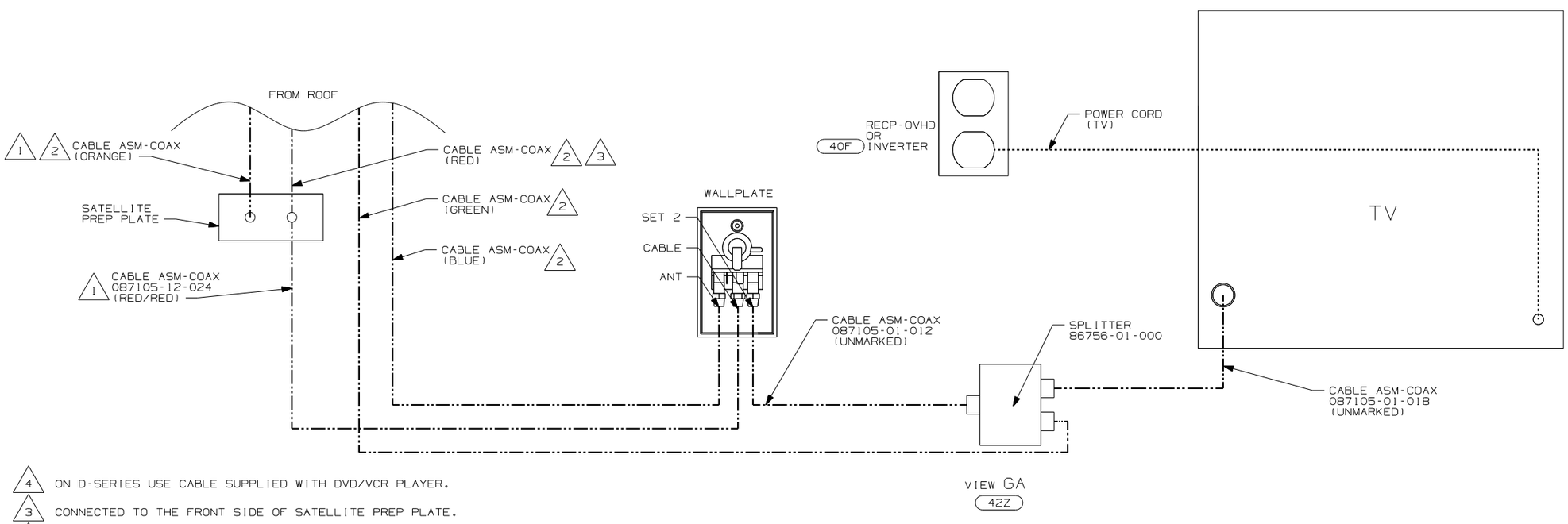

42Z TV-25" COLOR STEREO

40F INVERTER-DC/AC-130 WATT

25G DVD/VCR,STEREO,W/REMOTE

1JC TV-13" W/VIDEO SELECTION SYS

WITHOUT 1JC

4 ON D-SERIES USE CABLE SUPPLIED WITH DVD/VCR PLAYER.

3 CONNECTED TO THE FRONT SIDE OF SATELLITE PREP PLATE.

2 CABLE ROUTED IN ROOF.

1 CONNECTED TO THE REAR SIDE OF SATELLITE PREP PLATE.

NOTES:

FIRST USED	04 A-BODIES
DO NOT SCALE DRAWING	
TITLE: WIRING INSTL-TV/VCR,FRONT	
SHEET 7	PART NO 144832

DWG NO 144832

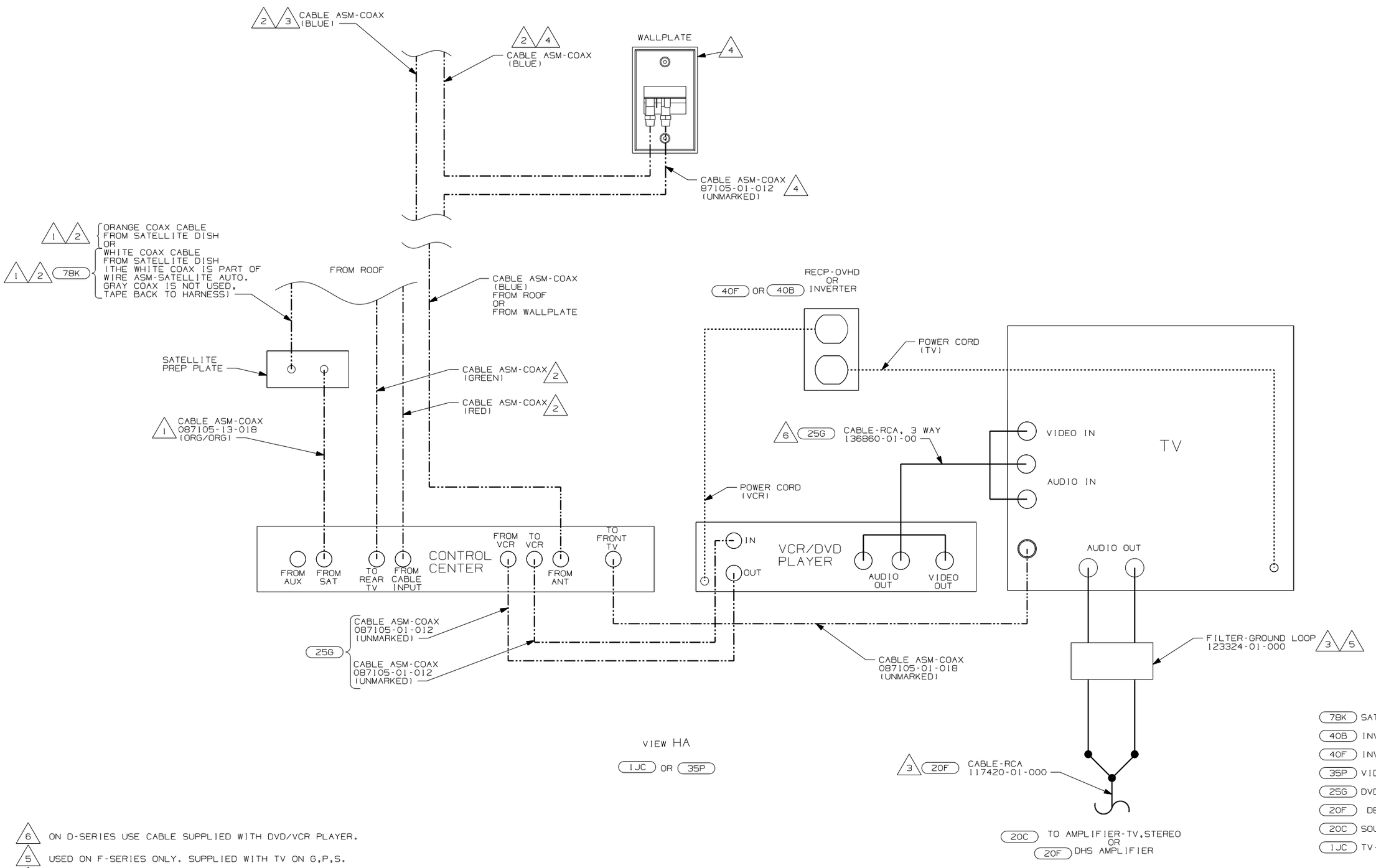

78K SATELLITE DISH-AUTOMATIC
40B INVERTER-DC/AC, 300 WATT
40F INVERTER-DC/AC-130 WATT
35P VIDEO SELECTION SYSTEM
25G DVD/VCR,STEREO,W/REMOTE
20F DELUXE SOUND SYSTEM-WITHOUT
20C SOUND SYS. DLX. W/Q-SURROUND
1JC TV-13" W/VIDEO SELECTION SYS

6 ON D-SERIES USE CABLE SUPPLIED WITH DVD/VCR PLAYER.
5 USED ON F-SERIES ONLY. SUPPLIED WITH TV ON G,P,S.
4 D-SERIES ONLY
3 NOT USED ON THE D-SERIES.
2 CABLE ROUTED IN ROOF.
1 CONNECTED TO THE REAR SIDE OF SATELLITE PREP PLATE.

FIRST USED	04 A-BODIES
DO NOT SCALE DRAWING	
TITLE: WIRING INSTL-TV/VCR,FRONT	
SHEET 8	PART NO 144832

DWG NO 144832

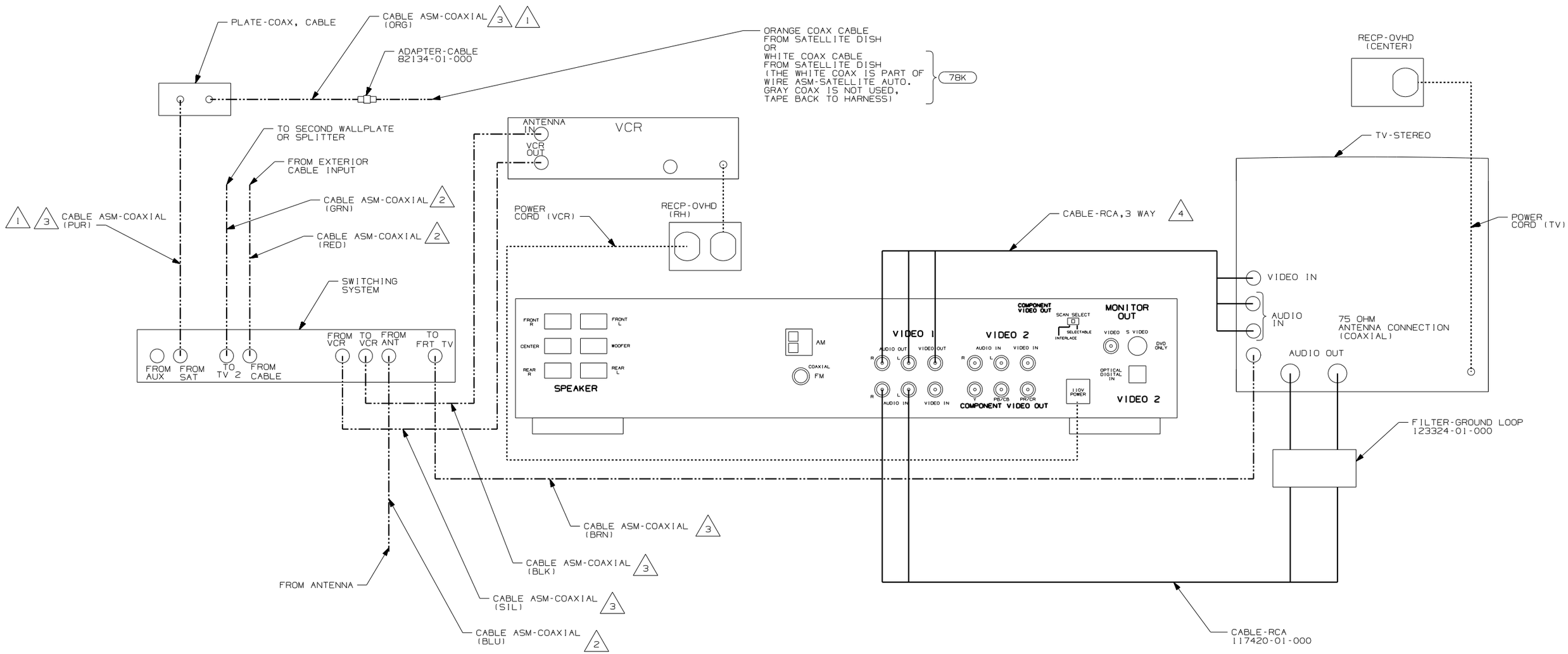

VIEW JA

78K SATELLITE DISH-AUTOMATIC

4 SUPPLIED WITH DVD PLAYER

3 CABLE IS PART OF WIRE ASM-COAX,FRONT ENT CTR 136766-01-00

2 CABLE ROUTED IN ROOF.

1 CONNECTED TO THE REAR SIDE OF SATELLITE PREP PLATE.

FIRST USED	04 A-BODIES
DO NOT SCALE DRAWING	
TITLE: WIRING INSTL-TV/VCR,FRONT	
SHEET 9	PART NO 144832

RELEASE	REV A	DATE	DWG NO 121339

REV	ZONE	REVISION RECORD	DATE	DFTR-ORIG

CG --- SCREW G13-07-12U WAS G13-08-10U ON LSH-3 05/17/07 3677-2245

TERMINALS

NO.	PART NUMBER	DESCRIPTION
B-1	50003-01	TERMINAL-PIN, 16-14 GA,.156 DIA
B-2	50004-01	TERMINAL-RECP, 16-14 GA,.156 DIA
B-11	50003-02	TERMINAL-PIN, 16-14 GA,.180 DIA
B-12	50004-02	TERMINAL-RECP, 16-14 GA,.180 DIA
WP-1	106950-01	TERMINAL-PIN, 16-14 GA
WP-2	106950-02	TERMINAL-PIN, 10-12 GA
WP-3	106950-03	TERMINAL-PIN, 8 GA
R-1	35416-01	TERMINAL-RING, #10 STD, 8 GA
R-2	35416-02	TERMINAL-RING, #10 STD, 6 GA
R-3	35416-03	TERMINAL-RING, #10 STD, 10-12 GA
R-4	35416-04	TERMINAL-RING, #10 STD, 14-16 GA
R-5	37018-01	TERMINAL-RING, 5/16 STD, 12-10 GA
R-6	102777-01	TERMINAL-RING, #6 STD, 14-16 GA
R-7	102777-02	TERMINAL-RING, #6 STD, 10-12 GA
R-8	102777-03	TERMINAL-RING, #6 STD, 8 GA
R-9	33787-01	TERMINAL-RING, #10 STD, 14 GA
R-60	8325-01	TERMINAL-RING, 1/4 STD, 14-16 GA
R-61	8326-01	TERMINAL-RING, 3/8 STD, 14-16 GA
R-62	8327-01	TERMINAL-RING, #10 STD, 14-16 GA
R-63	8328-01	TERMINAL-RING, #10 STD, 10-12 GA
R-64	8328-02	TERMINAL-RING, 3/8 STD, 10-12 GA
R-65	8329-01	TERMINAL-RING, 3/8 STD, 8 GA
R-66	8331-01	TERMINAL-RING, 3/8 STD, 4 GA
R-67	8332-01	TERMINAL-RING, 1/4 STD, 6 GA
R-68	8332-02	TERMINAL-RING, 1/4 STD, 10 GA
R-69	8350-01	TERMINAL-RING, 3/8 STD, 6 GA
R-70	99275-02	TERMINAL-RING, 7/16 STD, 8 GA
R-71	101397-01	TERMINAL-RING, #10 STD, 14-16 GA
R-91	88791-01	TERMINAL-RING, 3/8, 90°, 1/0 GA
R-92	88791-02	TERMINAL-RING, 3/8, 90°, 2 GA
R-93	8348-01	TERMINAL-RING, 3/8 STD, 2 GA
R-94	99275-01	TERMINAL-RING, 7/16 STD, 1/0 GA
RF-51	7944-01	TERMINAL-SPADE, 12-10 GA, #8 STUD
RF-52	7945-01	TERMINAL-SPADE, 18-14 GA, #8 STUD
TR-1	47443-01	TERMINAL-RECP, 16-14 GA,.25, INS
TR-2	47443-02	TERMINAL-RECP, 12-10 GA,.25, INS
TR-3	47443-05	TERMINAL-RECP, 22-18 GA,.25, INS
TR-11	47443-03	TERMINAL-RECP, 16-14 GA,.19, INS
TR-12	47443-04	TERMINAL-RECP, 16-14 GA,.11, INS
TR-21	80015-01	TERMINAL-RECP, 22-18 GA,.250, 90 DEG FOR USE WITH TAB THICKNESS .032
TR-22	80015-02	TERMINAL-RECP, 16-14 GA,.187, 90 DEG FOR USE WITH TAB THICKNESS .032
TR-23	80015-03	TERMINAL-RECP, 16-14 GA,.250, 90 DEG FOR USE WITH TAB THICKNESS .032
TR-24	80015-04	TERMINAL-RECP, 16-14 GA,.187, 90 DEG FOR USE WITH TAB THICKNESS .020
TR-51	7940-01	TERMINAL-RECP, 16-12 GA,.25, UNINS
TR-52	23809-01	TERMINAL-RECP, 16-14 GA,.19, UNINS
TR-53	23809-02	TERMINAL-RECP, 18-20 GA,.25, UNINS
TR-54	49270-01	TERMINAL-RECP, 18-20 GA,.19, UNINS
TR-55	7940-02	TERMINAL-RECP, 10 GA, .25, UNINS
TT-1	85745-02	TERMINAL-TAB, 16-14 GA,.25, INS
TT-2	85745-03	TERMINAL-TAB, 10-12 GA,.25, INS
TT-11	85745-04	TERMINAL-TAB, 18-22 GA,.19, INS
TT-51	7942-01	TERMINAL-TAB, 16-14 GA,.25, UNINS
TT-52	7943-01	TERMINAL-TAB, 14-10 GA,.25, UNINS
MF6-1	129236-01	TERMINAL-FEM, M/P, 630, 10-12
MF6-2	129236-02	TERMINAL-FEM, M/P, 630, 14-16

SPLICES

NO.	PART NUMBER	DESCRIPTION
BS-1	31876-01	SPLICE-BUTT, 16-14 GA, BLUE
BS-2	31876-02	SPLICE-BUTT, 12-10 GA, YELLOW
BS-3	31876-03	SPLICE-BUTT, 22-18 GA, RED
BS-SB	100070-01	SPLICE-BUTT, 14-16 GA, SHRINK,BLUE
BS-RB	112823-01	SPLICE-BUTT, 14-22 GA, REDUCER
S-1	7946-01	SPLICE, 1-6 MM²
S-2	23808-01	SPLICE, 6-9 MM²
I-2	7956-02	SHRINK WRAP .375 DIA
I-5	7956-05	SHRINK WRAP .25 DIA
SH-1	58028-01	SPLICE-HAT
S-10	101173-01	SPLICE-BARREL, 26300 CMA

NO.	PART NUMBER	DESCRIPTION
SP-1	90986-02	PLUG ASM-ELECTRIC STEP
SP-2	142524-01-000 098261-01-000 098262-07-000 098261-02-000 (3) 098262-01-000 (3)	HOUSING-4 PIN SOCKET-CONNECTOR SEAL-CONNECTOR SOCKET-CONNECTOR SEAL-CONNECTOR
HR-1	63910-01	HOUSING-RELAY
MP-8 MP-10 MPP CAV-1 CON-3	125323-02 125323-01 125324-01 125325-01 98262-03	HOUSING-PIN, 8 CAVITY HOUSING-PIN, 10 CAVITY TERMINAL-MALE, M/P, 150 SEAL-CAVITY, 150-SERIES M/P SEAL-CONNECTOR
LS-8 LS-10	125323-03 125323-04	LOCK-SECONDARY 8 POSITION LOCK-SECONDARY 10 POSITION
H-8 H-12	108355-01 108355-02	HOUSING-SWITCH, 8 POSITION HOUSING-SWITCH, 12 POSITION

NO.	PART NUMBER	DESCRIPTION
GEN-1	125323-02-000 125324-01-000 (4) 098262-03-000 (4) 125325-01-000 (4) 125323-03-000	HOUSING-8 POSN, MALE ,150 SERIES TERMINAL-MALE, M/P, 150 SEAL-CONNECTOR SEAL-CAVITY, 150 SERIES M/P LOCK-SECONDARY 8 POSITION
GEN-2	125323-01-000 125324-01-000 (5) 098262-03-000 (5) 125325-01-000 (5) 125323-04-000	HOUSING-10 POSN, MALE ,150 SERIES TERMINAL-MALE, M/P, 150 SEAL-CONNECTOR SEAL-CAVITY, 150 SERIES M/P LOCK-SECONDARY 10 POSITION

HOUSINGS AND TERMINALS

NO.	PART NUMBER	DESCRIPTION
HS-2	88474-10	HOUSING-SOCKET, 2 CAVITY
HS-3	88474-09	HOUSING-SOCKET, 3 CAVITY
HS-4	88474-08	HOUSING-SOCKET, 4 CAVITY
HS-5	88474-07	HOUSING-SOCKET, 5 CAVITY
HS-6	88474-06	HOUSING-SOCKET, 6 CAVITY
HS-7	88474-05	HOUSING-SOCKET, 6 CAVITY-IN LINE
HS-9	88474-03	HOUSING-SOCKET, 9 CAVITY
HS-12	88474-01	HOUSING-SOCKET, 12 CAVITY
HS-15	88474-02	HOUSING-SOCKET, 15 CAVITY
HS-2-R	88474-12	HOUSING-SOCKET, 2 CAVITY-RED
HP-2	88473-10	HOUSING-PIN, 2 CAVITY
HP-3	88473-09	HOUSING-PIN, 3 CAVITY
HP-4	88473-08	HOUSING-PIN, 4 CAVITY
HP-5	88473-07	HOUSING-PIN, 5 CAVITY
HP-6	88473-06	HOUSING-PIN, 6 CAVITY
HP-7	88473-05	HOUSING-PIN, 6 CAVITY-IN LINE
HP-8	88473-04	HOUSING-PIN, 8 CAVITY-IN LINE
HP-9	88473-03	HOUSING-PIN, 9 CAVITY
HP-12	88473-01	HOUSING-PIN, 12 CAVITY
HP-15	88473-02	HOUSING-PIN, 15 CAVITY
HP-2-R	88473-15	HOUSING-PIN, 2 CAVITY-RED
HP-3-B	88473-12	HOUSING-PIN, 3 CAVITY-BLUE
HP-3-G	88473-13	HOUSING-PIN, 3 CAVITY-GREEN
HP-3-R	88473-14	HOUSING-PIN, 3 CAVITY-RED
TS-1	88476-01	SOCKET-CONNECTOR, 20-14 GA
TS-2	88476-02	SOCKET-CONNECTOR, 12-10 GA
TP-1	88475-01	PIN-CONNECTOR, 20-14 GA
TP-2	88475-02	PIN-CONNECTOR, 12-10 GA
HS2HA	137208-01	HOUSING-SOCKET, 2 CAVITY-HIGH AMP
HP2HA	137207-01	HOUSING-PIN, 2 CAVITY-HIGH AMP
TS-HA	137210-01	SOCKET-CONNECTOR, 10AWG HIGH AMP
TP-HA	137209-01	PIN-CONNECTOR, 10AWG HIGH AMP
H-HA	104100-01	HOUSING, 1 CAVITY 75 AMP
T-HA	104100-03	TERMINAL 10 AWG - 6 AWG 75 AMP

BALLOON CALLOUT LEGEND

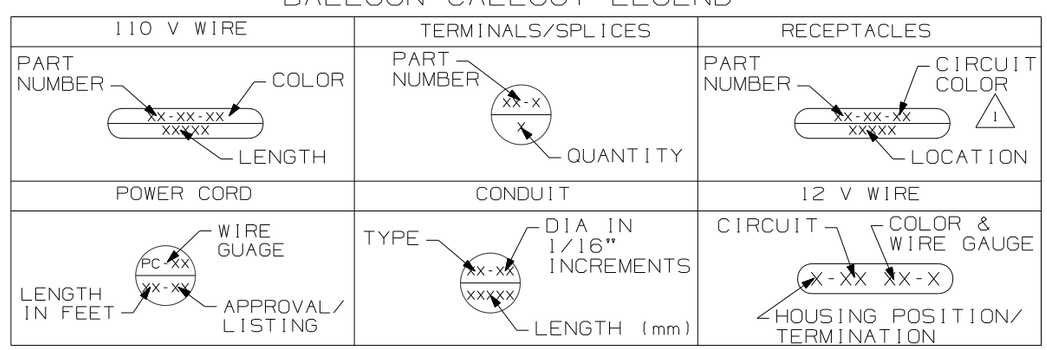

NOTES:

1. FOR RECP-BLANK, DET-X DENOTES DETAIL VIEW.
2. CONTACT WIRE PREP PRIOR TO USING FOR TOOLING PURPOSES.

COPYRIGHT 2006 WINNEBAGO INDUSTRIES, INC.

DFTR	ORIG. DATE
CHKR	ALL DIMENSIONS ARE IN MILLIMETERS
P.E.	
M.E.	FIRST USED 96 MH'S
DSNR	
UNSPECIFIED TOLERANCES ARE: WHOLE DIM (X) : ONE-PLACE (X.X) : TWO-PLACE (X.XX) : ANGLE : THIRD ANGLE PROJECTION	MATERIAL:

DO NOT SCALE DRAWING

TITLE: PART LISTING-ELECTRICAL

SHEET 1 OF 7 | PART NO 121339 | REV

DWG NO 121339

WIRE-SINGLE INS CONDUCTOR, STRANDED

NO.	PART NUMBER	DESCRIPTION
18-W	156658-01	WIRE, 18 GA. WHITE, PVC
18-Y	156658-02	WIRE, 18 GA. YELLOW, PVC
16-Y	89360-01	WIRE, 16 GA. YELLOW, PVC
16-W	89360-02	WIRE, 16 GA. WHITE, PVC
14-Y	48554-02	WIRE, 14 GA. YELLOW, PVC
14-W	48554-04	WIRE, 14 GA. WHITE, PVC
12-Y	48555-02	WIRE, 12 GA. YELLOW, PVC
12-W	48555-04	WIRE, 12 GA. WHITE, PVC
10-Y	8000-03	WIRE, 10 GA. YELLOW, PVC
10-W	8000-05	WIRE, 10 GA. WHITE, PVC
8-B	8005-01	WIRE, 8 GA. BLACK, PVC
8-G	8005-03	WIRE, 8 GA. GREEN, PVC
6-B	70065-01	WIRE, 6 GA. BLACK, PVC
6-G	70065-03	WIRE, 6 GA. GREEN, PVC
18-WX	121015-01	WIRE, 18 GA. WHITE, XLPE
18-YX	121015-02	WIRE, 18 GA. YELLOW, XLPE
16-YX	116675-01	WIRE, 16 GA. YELLOW, XLPE
16-WX	116675-02	WIRE, 16 GA. WHITE, XLPE
14-YX	98586-01	WIRE, 14 GA. YELLOW, XLPE
14-WX	98586-02	WIRE, 14 GA. WHITE, XLPE
12-YX	98609-01	WIRE, 12 GA. YELLOW, XLPE
12-WX	98609-02	WIRE, 12 GA. WHITE, XLPE
10-YX	116676-03	WIRE, 10 GA. YELLOW, XLPE
10-WX	116676-04	WIRE, 10 GA. WHITE, XLPE
8-BX	116674-01	WIRE, 8 GA. BLACK, XLPE
8-GX	116674-02	WIRE, 8 GA. GREEN, XLPE
6-BX	116687-01	WIRE, 6 GA. BLACK, XLPE
6-GX	116687-02	WIRE, 6 GA. GREEN, XLPE

WIRE-NM SHEATHED CABLE

NO.	PART NUMBER	DESCRIPTION
14 UL	8027-01-000	WIRE 14-2 ROMEX W/GROUND (UL)
14 CA	8023-02-000	WIRE 14-2 ROMEX W/GROUND (CAN)
12 UL	8026-01-000	WIRE 12-2 ROMEX W/GROUND (UL)
12 CA	8023-01-000	WIRE 12-2 ROMEX W/GROUND (CAN)
12-3 UL	8026-03-000	WIRE 12-3 ROMEX W/GROUND (UL)
12-3 CA	8023-03-000	WIRE 12-3 ROMEX W/GROUND (CAN)
10 UL	8022-01-000	WIRE 10-2 ROMEX W/GROUND (UL)
10 CA	24743-01-000	WIRE 10-2 ROMEX W/GROUND (CAN)
6-3 UL	108914-01-000	WIRE 6-3 ROMEX W/GROUND (UL)
6-3 CA	113136-01-000	WIRE 6-3 ROMEX W/GROUND (CAN)
6-2 UL	108914-02-000	WIRE 6-2 ROMEX W/GROUND (UL)
4-3 UL	128375-01-000	WIRE 4-3 ROMEX W/GROUND (UL)
4-3 CA	128375-01-000	WIRE 4-3 ROMEX W/GROUND (CAN)

CONDUIT

NO.	PART NUMBER	DESCRIPTION	TEMP.
C-4	41953-07-000	CONDUIT-CONVOLUTE,SLIT .25"ID	194° F
C-6	41953-06-000	CONDUIT-CONVOLUTE,SLIT .38"ID	194° F
C-8	41953-01-000	CONDUIT-CONVOLUTE,SLIT .50"ID	194° F
C-10	41953-02-000	CONDUIT-CONVOLUTE,SLIT .63"ID	194° F
C-16	41953-03-000	CONDUIT-CONVOLUTE,SLIT 1.0"ID	194° F
C-24	41953-08-000	CONDUIT-CONVOLUTE,SLIT 1.5"ID	194° F
C-32	41953-15-000	CONDUIT-CONVOLUTE,SLIT 2.0"ID	194° F
CX-8	41953-09-000	CONDUIT-CONVOLUTE,SLIT .50"ID	239° F
CX-12	41953-10-000	CONDUIT-CONVOLUTE,SLIT .75"ID	239° F
CX-16	41953-11-000	CONDUIT-CONVOLUTE,SLIT 1.0"ID	239° F
CX-20	41953-13-000	CONDUIT-CONVOLUTE,SLIT 1.25"ID	239° F
CX-24	41953-14-000	CONDUIT-CONVOLUTE,SLIT 1.50"ID	239° F
CX-32	41953-16-000	CONDUIT-CONVOLUTE,SLIT 2.0"ID	239° F
CN-10	41953-05-000	CONDUIT-CONVOLUTE,NOT SLIT .63"ID	194° F
CN-16	41953-12-000	CONDUIT-CONVOLUTE,NOT SLIT 1.0"ID	194° F

POWER CORDS

NO.	PART NUMBER	DESCRIPTION
PC-10/28	8054-01-000	POWER CORD 10 GA, 30 AMP, 28 FT. (UL/CA)
PC-10/35	8054-02-000	POWER CORD 10 GA, 30 AMP, 35 FT. (UL/CA)
PC-10/30-CA	8052-01-000	SUPERCEEDED BY 8054-01-000
PC-6/36	108934-01-000	POWER CORD 6 GA, 50 AMP, 36 FT. (UL/CA)
PC-6/36-FX	108934-02-000	POWER CORD 6 GA, 50 AMP, 36 FT. (UL/CSA) SUPERFLEX
PC-6/36-CA	113096-01-000	SUPERCEEDED BY 108934-02-000

BATTERY CABLE LEGEND

COLOR	DESCRIPTION
PURPLE	CHASSIS BATTERY TO SOLENOID
BLUE	HYDRAULIC JACKS PUMP
RED	BATTERY TO STARTER
GREEN	BATTERY TO GENERATOR
YELLOW	COACH BATTERY TO SOLENOID

RECEPTACLES

NO.	PART NUMBER	DESCRIPTION
RCP-1	86738-02-CHT	RECEPTACLE-SINGLE, FLUSH MOUNT
RCP-2	86738-01-CHT	RECEPTACLE-DOUBLE, FLUSH MOUNT
RCP-3	58707-01-000	RECEPTACLE-SINGLE, SURFACE MOUNT
RCP-4	157360-01-000	RECEPTACLE-SINGLE,SURFACE MOUNT,20A
RCP-5	160984-01-CHT	RECEPTACLE-SINGLE,FLUSH MOUNT,20A
RCP-B	58707-02-000	RECEPTACLE-BLANK, JUNCTION
RCP-E	131826-01-CHT	INCLUDES COVER & GASKET

CIRCUIT COLOR LEGEND

110V CIRCUIT	WIRE COLOR	COAXIAL CIRCUIT
A/C CIRCUIT 1	RED	CABLE INPUT W/O SPLITTER
A/C CIRCUIT 2	GRN	REAR TV W/O SPLITTER
GENERAL RECPS 1	BLU	ANTENNA
GENERAL RECPS 2	BRN	FRONT TV
GENERAL RECPS 3	PUR	VCR INPUT
GENERAL RECPS 4	GRY	
REFRIGERATOR/ CONVERTER	YEL	EXT ENT CTR
MICROWAVE	BLK	AUX INPUT
WATER HEATER	WHT	
WASHER/DRYER	GLD	
DISHWASHER	SIL	
	ORG	SATELLITE PLATE INPUT
	ORG/ORG	SATELLITE PLATE OUTPUT
	RED/RED	CABLE INPUT W/SPLITTER
	GRN/GRN	REAR TV W/SPLITTER
	PUR/PUR	VCR OUTPUT

FIRST USED 96 MH'S

DO NOT SCALE DRAWING

TITLE: PART LISTING-ELECTRICAL

SHEET 2 | PART NO 121339 | REV

DWG NO 121339

LAMP ASM-PACKAGE,PANCAKE

NO	PART NUMBER	DESCRIPTION
LF1-1	LAMP 98024-01-CHT SCREW G11-08-16U (4) CONNECTOR 58028-01-000 (2)	LAMP ASM, FROSTED LENS, 1 BULB W/SWITCH PROGRESSIVE DYNAMICS INC.
LF2-1	LAMP 98024-03-CHT SCREW G11-08-16U (6) CONNECTOR 58028-01-000 (2)	LAMP ASM, FROSTED LENS, 2 BULB W/SWITCH PROGRESSIVE DYNAMICS INC.
LO1-1	LAMP 98024-05-CHT SCREW G11-08-16U (4) CONNECTOR 58028-01-000 (2)	LAMP ASM, OPTI CLEAR LENS, 1 BULB W/SWITCH PROGRESSIVE DYNAMICS INC.
LO2-1	LAMP 98024-06-CHT SCREW G11-08-16U (6) CONNECTOR 58028-01-000 (2)	LAMP ASM, OPTI CLEAR LENS, 2 BULB W/SWITCH PROGRESSIVE DYNAMICS INC.
LF1N1	LAMP 98024-07-CHT SCREW G11-08-16U (4) CONNECTOR 58028-01-000 (2)	LAMP ASM, FROSTED LENS, 1 BULB W/O SWITCH PROGRESSIVE DYNAMICS INC.
LF2N1	LAMP 98024-08-CHT SCREW G11-08-16U (6) CONNECTOR 58028-01-000 (2)	LAMP ASM, FROSTED LENS, 2 BULB W/O SWITCH PROGRESSIVE DYNAMICS INC.
LFSN1	LAMP 98024-09-CHT SCREW G11-08-16U (6) CONNECTOR 58028-01-000 (2)	LAMP ASM, SINGLE FROSTED LENS, 2 BULB W/O SWITCH PROGRESSIVE DYNAMICS INC.

LAMP ASM-PACKAGE,HALOGEN

NO	PART NUMBER	DESCRIPTION
HAL	LAMP 123775-01-CHT SCREW (SUPPLIED) CONNECTOR 58028-01-000 (2)	LAMP ASM-HALOGEN, READING 1 BULB
HAL-S	LAMP 123775-01-CHT SPACER 123775-02-CHT SCREW G13-06-16U (3) CONNECTOR 58028-01-000 (2)	LAMP ASM-HALOGEN, READING WITH 3/4" SPACER 1 BULB

LAMP ASM-PACKAGE,PANCAKE

NO	PART NUMBER	DESCRIPTION
LF1-2	LAMP 137417-01-CHT SCREW G11-08-16U (4) CONNECTOR 58028-01-000 (2)	LAMP ASM, FROSTED LENS, 1 BULB W/SWITCH PROGRESSIVE DYNAMICS INC.
LF2-2	LAMP 137417-04-CHT SCREW G11-08-16U (6) CONNECTOR 58028-01-000 (2)	LAMP ASM, FROSTED LENS, 2 BULB W/SWITCH PROGRESSIVE DYNAMICS INC.
LO1-2	LAMP 137417-02-CHT SCREW G11-08-16U (4) CONNECTOR 58028-01-000 (2)	LAMP ASM, OPTI CLEAR LENS, 1 BULB W/SWITCH PROGRESSIVE DYNAMICS INC.
LO2-2	LAMP 137417-05-CHT SCREW G11-08-16U (6) CONNECTOR 58028-01-000 (2)	LAMP ASM, OPTI CLEAR LENS, 2 BULB W/SWITCH PROGRESSIVE DYNAMICS INC.
LF1N2	LAMP 137417-03-CHT SCREW G11-08-16U (4) CONNECTOR 58028-01-000 (2)	LAMP ASM, FROSTED LENS, 1 BULB W/O SWITCH PROGRESSIVE DYNAMICS INC.
LFSN2	LAMP 137417-06-CHT SCREW G11-08-16U (6) CONNECTOR 58028-01-000 (2)	LAMP ASM, SINGLE FROSTED LENS, 2 BULB W/O SWITCH PROGRESSIVE DYNAMICS INC.

LAMP ASM-PACKAGE,PORCH

NO	PART NUMBER	DESCRIPTION
LEXT-1	LAMP 97917-01-CHT SCREW G67-10-129 (4) CONNECTOR 58028-01-000 (2)	LAMP ASM-PORCH, SURFACE MOUNT BARGMAN
LEXT-2UL	LAMP 8089-01-000 SCREW G68-06-10E (2) CONNECTOR 58028-01-000 (2)	LAMP ASM-PORCH, RECESSED UL LIST JRV PROD
LEXT-2CA	LAMP 8089-02-000 SCREW G68-06-10E (2) CONNECTOR 58028-01-000 (2)	LAMP ASM-PORCH, RECESSED CAN LIST JRV PROD

LEGEND

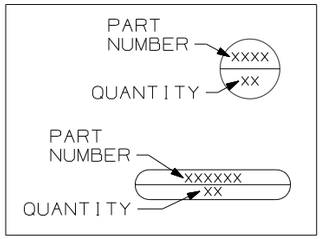

FIRST USED 96 MH'S

DO NOT SCALE DRAWING

TITLE: PART LISTING-ELECTRICAL

SHEET 3 | PART NO 121339 | REV

DWG NO 121339

LAMP ASM-PACKAGE,FLUORESCENT

NO	PART NUMBER	DESCRIPTION
FLU-1	LAMP 91936-02-CHT SCREW G11-08-12U (4) CONNECTOR 58028-01-000 (2)	LAMP ASM-FLUORESCENT 12" 2 BULB W/SWITCH THIN-LITE
FLU-2	LAMP 91936-01-CHT SCREW G11-08-12U (4) CONNECTOR 58028-01-000 (2)	LAMP ASM-FLUORESCENT 18" 2 BULB W/SWITCH THIN-LITE
FLU-3	LAMP 127327-01-CHT SCREW G11-08-12U (2) CONNECTOR 58028-01-000 (2)	LAMP ASM-FLUORESCENT 18" 1-12" BULB W/SWITCH THIN-LITE
FLU-4	LAMP 130338-01-CHT SCREW G11-08-12U (4) CONNECTOR 58028-01-000 (2)	LAMP ASM-FLUORESCENT 18" 2 BULB SURFACE MOUNT W/SWITCH THIN-LITE
FLU-5	LAMP 153464-02-CHT SCREW G11-08-12U (4) CONNECTOR 58028-01-000 (2)	LAMP ASM-FLUORESCENT 12" 2 BULB W/SWITCH COOL WHITE BULB THIN-LITE CUTOUT-122 X 336
FLU-6	LAMP 130338-02-CHT SCREW G11-08-12U (4) CONNECTOR 58028-01-000 (2)	LAMP ASM-FLUORESCENT 18" 2 BULB SURFACE MOUNT WARM WHITE BULB W/SWITCH THIN-LITE
FLU-7	LAMP 153464-05-CHT SCREW G11-08-12U (4) CONNECTOR 58028-01-000 (2)	LAMP ASM-FLUORESCENT 12" 2 BULB W/SWITCH WARM WHITE BULB THIN-LITE CUTOUT-122 X 336
FLUN1	LAMP 91936-04-CHT SCREW G11-08-12U (4) CONNECTOR 58028-01-000 (2)	LAMP ASM-FLUORESCENT 12" 2 BULB W/O SWITCH THIN-LITE
FLUN2	LAMP 91936-03-CHT SCREW G11-08-12U (4) CONNECTOR 58028-01-000 (2)	LAMP ASM-FLUORESCENT 18" 2 BULB W/O SWITCH THIN-LITE
FLUN3	LAMP 153464-01-CHT SCREW G11-08-12U (4) CONNECTOR 58028-01-000 (2)	LAMP ASM-FLUORESCENT 12" 2 BULB W/O SWITCH COOL WHITE BULB THIN-LITE CUTOUT-122 X 336

LAMP ASM-PACKAGE,FLUORESCENT

NO	PART NUMBER	DESCRIPTION
FLUN4	LAMP 153464-03-CHT SCREW G11-08-12U (6) CONNECTOR 58028-01-000 (2)	LAMP ASM-FLUORESCENT 18" 2 BULB W/O SWITCH COOL WHITE BULB THIN-LITE CUTOUT-122 X 480
FLUN5	LAMP 153464-06-CHT SCREW G11-08-12U (6) CONNECTOR 58028-01-000 (2)	LAMP ASM-FLUORESCENT 18" 2 BULB W/O SWITCH WARM WHITE BULB THIN-LITE CUTOUT-122 X 480
FLUN6	LAMP 153464-04-CHT SCREW G11-08-12U (6) CONNECTOR 58028-01-000 (2)	LAMP ASM-FLUORESCENT 12" 2 BULB W/O SWITCH WARM WHITE BULB THIN-LITE CUTOUT-122 X 336

LAMP ASM-PACKAGE,MAKEUP LAMP

NO	PART NUMBER	DESCRIPTION
LMU3-1	LAMP 110235-01-CHT SCREW W/SPACER (SUPPLIED) CONNECTOR 58028-01-000 (2)	LAMP ASM-MAKEUP (W/O MIRROR) 3 BULB (SUPPLIED) PROGRESSIVE DYNAMICS
LMM3-2	LAMP 123774-03-CHT SCREW (SUPPLIED) BULB 123918-01-000 (3) CONNECTOR 58028-01-000 (2)	LAMP ASM-MAKEUP (W/MIRROR) 3 BULB GUSTOFSON
LMU3-2	LAMP 138116-01-CHT SCREW (SUPPLIED) BULB 123918-01-000 (3) CONNECTOR 58028-01-000 (2)	LAMP ASM-MAKEUP (W/O MIRROR) 3 BULB GUSTOFSON
LMU3-3	LAMP 162446-01-CHT SCREW (SUPPLIED) BULB 123918-01-000 (3) CONNECTOR 58028-01-000 (2)	LAMP ASM-MAKEUP (W/O MIRROR) 3 BULB GUSTOFSON
LMU4-1	LAMP 110235-02-CHT SCREW G11-08-16U (2) CONNECTOR 58028-01-000 (2)	LAMP ASM-MAKEUP (W/O MIRROR) 4 BULB PROGRESSIVE DYNAMICS
LMU4-2	LAMP 138116-02-CHT SCREW (SUPPLIED) BULB 123918-01-000 (4) CONNECTOR 58028-01-000 (2)	LAMP ASM-MAKEUP (W/O MIRROR) 4 BULB GUSTOFSON
LMU4-3	LAMP 162446-02-CHT SCREW (SUPPLIED) BULB 123918-01-000 (4) CONNECTOR 58028-01-000 (2)	LAMP ASM-MAKEUP (W/O MIRROR) 4 BULB GUSTOFSON
LMM4-2	LAMP 123774-01-CHT SCREW G11-08-16U (2) BULB 123918-01-000 (4) CONNECTOR 58028-01-000 (2)	LAMP ASM-MAKEUP (W/MIRROR) 4 BULB GUSTOFSON

LAMP ASM-PACKAGE,OTHER

NO	PART NUMBER	DESCRIPTION
LSH-1	LAMP 121935-01-CHT SCREW G11-08-16U (4) CONNECTOR 58028-01-000 (2)	LAMP ASM-SHOWER PROGRESSIVE DYNAMICS INC.
LSH-2	LAMP 164039-01-CHT SCREW G11-08-16U (3) CONNECTOR 58028-01-000 (2)	LIGHT-DOME,SHOWER
LSH-3	LAMP 164040-01-CHT SCREW G13-07-12U (3) CONNECTOR 58028-01-000 (2)	LIGHT-DOME,SHOWER GLASS
LCR-1	LAMP 61424-01-000 SCREW G11-08-12U (4) CONNECTOR 58028-01-000 (2)	LAMP ASM-COURTESY,AISLE RAMCO (RECTANGULAR)
LCS-1	LAMP 108354-01-CHT SCREW G11-08-12U (4) CONNECTOR 58028-01-000 (2)	LAMP ASM-COURTESY,AISLE ITC MARINE (SQUARE)
READ-1	LIGHT-READING 132427-01-CHT SCREW SUPPLIED W/ LIGHT CLIP-U 141395-02-CHT (2) CONNECTOR 58028-01-000 (2)	LIGHT-READING,SWIVEL,ROUND 1 BULB
READ-2	LIGHT-READING 128786-02-CHT SCREW G11-08-16J (2) BULB 123917-01-000 CONNECTOR 58028-01-000 (2)	LIGHT,READING,SWIVEL

LEGEND

PART NUMBER — XXXX
QUANTITY — XX

PART NUMBER — XXXXXX
QUANTITY — XX

FIRST USED	96 MH'S
	DO NOT SCALE DRAWING
TITLE:	PART LISTING-ELECTRICAL
SHEET 4	PART NO 121339 REV

DWG NO 121339

ANTENNA ASM-PACKAGE

NO	PART NUMBER	DESCRIPTION
ANT-1	ANTENNA 76319-24-000 HARDWARE-INTERIOR 76319-25-000 BUMPER 69726-02-000 (2) CLIP 80734-02-000	ROOF MOUNT TV ANTENNA ASM 25.5" MAST 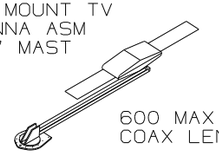 600 MAX COAX LENGTH
ANT-2	ANTENNA 76319-23-000 HARDWARE-INTERIOR 76319-25-000 BUMPER 69726-02-000 (2) ADAPTER SUPPLIED W/ANTENNA	ROOF MOUNT TV ANTENNA ASM 44.5" MAST 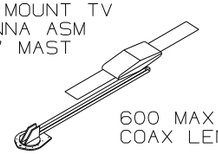 600 MAX COAX LENGTH
ANT-2W	ANTENNA 76319-23-000 HARDWARE-INTERIOR 76319-25-000 BUMPER 69726-02-000 (2) ADAPTER SUPPLIED W/ANTENNA WEDGE 76319-26-000	ROOF MOUNT TV ANTENNA ASM 44.5" MAST 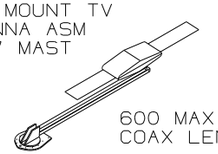 600 MAX COAX LENGTH
ANTA-1	ANTENNA 158270-01-CHT BUMPER 69726-02-000 (2) ADAPTER SUPPLIED W/ANTENNA	ROOF MOUNT TV ANTENNA ASM AUTOMATIC 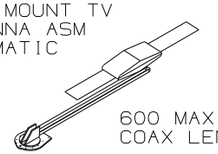 600 MAX COAX LENGTH
ANT-3	ANTENNA-TV ROOF MNT,ROUND 132935-01-000 PLATE-ROOF, CABLE ENTRY 146488-01-000 SCREW G67-10-129 (10) CABLE ASM-COAX 87105-01-006 ADAPTER 82134-01-000	ROOF MOUNT OMNI- DIRECTIONAL ANTENNA MOUNTING SCREWS SUPPLIED WITH ANTENNA 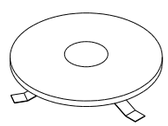

SENSORS

NO	PART NUMBER	DESCRIPTION
LPGD	LP GAS DETECTOR 150138-01-CHT SCREW G68-06-10U (2)	DETECTOR-LP GAS 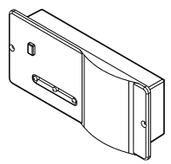

PANELS

NO	PART NUMBER	DESCRIPTION
SOLAR	PANEL-SOLAR 10 WATT 151647-01-000 SCREW G11-08-12U (4)	SOLAR PANEL 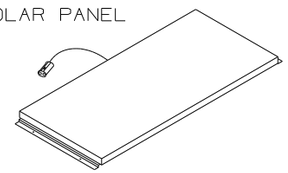

ANTENNA ASM-PACKAGE

ANTEXT-1	CABLE ASM-EXTENS 77069-02-000	RADIO ANTENNA CABLE EXTENSION 2400MM USABLE LENGTH 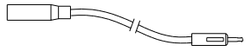
ANTKIT-1	ADAPTER-PLATE 76319-06-000 SCREW G11-08-08T (6) CLIP-WIRE 80734-02-000 SCREW G11-08-08T	PLATE ASM-ADAPTERS CABLE ROOF MOUNTING PLATE W/ CABLE-CABLE ADAPTER, FITTINGS, AND CABLE RETAINING CLIP 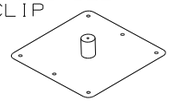
ANT-R	ANTENNA-RADIO 90944-01-000 EXTENDER-SHAFT ANTENNA 109889-04-000 BRACKET-ANTENNA GROUND 147741-01-CHT	ROOF MOUNT RADIO ANTENNA
ANTEXT-2	CABLE ASM-EXTENS 77069-03-000	RADIO ANTENNA CABLE EXTENSION 6600 MM USABLE LENGTH

SATELLITE DISH INSTL

NO	PART NUMBER	DESCRIPTION
DM-1	SATELLITE DISH 137135-02-000 SCREW G67-10-12B (8) PLATE & BRACKET (SUPPLIED) SCREW G67-10-12B (10)	SATELLITE DISH ANTENNA ASM MANUAL SETUP 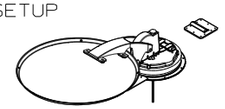
DA-1	SATELLITE DISH 163598-01-CHT PLATE-ROOF,CABLE ENTRY QUAD 146488-03-000 SCREW G67-10-12U (8) (FOR PLATE) SCREW G39-10-12U (12) (FOR SATELLITE DISH)	SATELLITE DISH ANTENNA ASM AUTOMATIC SETUP 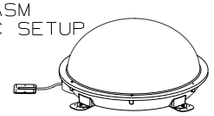
DI-1	SATELLITE DISH 154474-04-CHT SCREW G39-10-12B (12) PLATE 146488-01-000 SCREW G67-10-12B (10)	SATELLITE DISH ANTENNA ASM IN MOTION SETUP 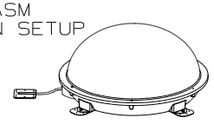

SATELLITE DISH INSTL

NO	PART NUMBER	DESCRIPTION
DA-2	SATELLITE DISH 163598-01-CHT PLATE-ROOF,CABLE ENTRY QUAD 146488-03-000 CABLE ASM-COAX 9" 163598-04-000 ADAPTOR-CABLE TO CABLE 82134-01-000 SCREW G67-10-12U (8) (FOR PLATE) SCREW G39-10-12U (12) (FOR SATELLITE DISH)	SATELLITE DISH ANTENNA ASM AUTOMATIC SETUP 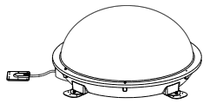
DI-2	SATELLITE DISH 154474-04-CHT PLATE-ROOF,CABLE ENTRY QUAD 146488-03-000 CABLE ASM-COAX 9" 163598-04-000 ADAPTOR-CABLE TO CABLE 82134-01-000 SCREW G67-10-12U (8) (FOR PLATE) SCREW G39-10-12U (12) (FOR SATELLITE DISH)	SATELLITE DISH ANTENNA ASM AUTOMATIC SETUP 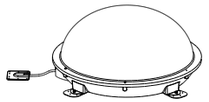
DM-2	SATELLITE DISH 137135-05-000 PLATE-ROOF,ENTRY (SUPPLIED WITH SATELLITE DISH) SCREW G67-10-12U (8) (FOR ROOF PLATE) SCREW G67-10-12U (10) (FOR SATELLITE DISH)	SATELLITE DISH ANTENNA ASM MANUAL SETUP 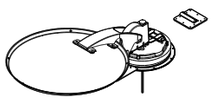

LEGEND

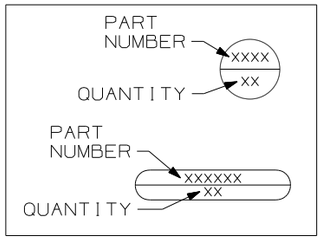

FIRST USED
96 MH'S

DO NOT SCALE DRAWING

TITLE:
PART LISTING-ELECTRICAL

SHEET 5 | PART NO 121339 | REV

DWG NO 121339

RECEPTACLE PACKAGE-GFI

NO	PART NUMBER	DESCRIPTION
GFI US	RECEPTACLE 163319-01-CHT BOX 91910-02-000 WIRE-BONDING 133678-03-000 SCREW G13-07-12B (4) CONNECTOR 8313-01-000 TUBING-VINYL 8041-02-000 (300MM) 1	GFI RECEPTACLE WITH COVER AND BOX FOR US APPLICATION 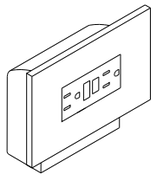
GFI CAN	RECEPTACLE 163319-01-CHT BOX 91910-01-000 WIRE-BONDING 133678-03-000 SCREW G13-07-12B (4) CONNECTOR 8313-01-000 TUBING-VINYL 8041-02-000 (300MM) 1	GFI RECEPTACLE WITH COVER AND BOX FOR CANADA APPLICATION 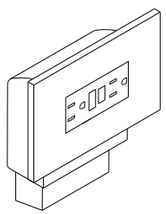

RECEPTACLE PACKAGE-GFI

NO	PART NUMBER	DESCRIPTION
GFI-1 US	RECEPTACLE 163319-01-CHT BOX 133070-01-000 WIRE-BONDING 133678-03-000 SCREW G13-07-12B (4) CONNECTOR 8313-01-000 TUBING-VINYL 8041-02-000 (300MM) 1	GFI RECEPTACLE WITH COVER AND BOX FOR US APPLICATION 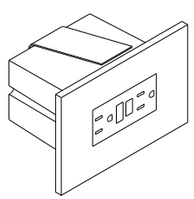
GFI-1 CAN	RECEPTACLE 163319-01-CHT BOX 133070-02-000 WIRE-BONDING 133678-03-000 SCREW G13-07-12B (4) CONNECTOR 8313-01-000 TUBING-VINYL 8041-02-000 (300MM) 1	GFI RECEPTACLE WITH COVER AND BOX FOR CANADA APPLICATION 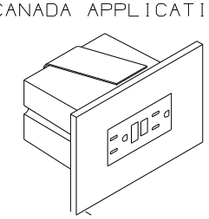

SPACERS

NO	PART NUMBER	DESCRIPTION
SP-01	SPACER 102568-01-XXX	STANDARD 110V RECEPTACLE SPACER (WOOD,VYL RAP,OG) 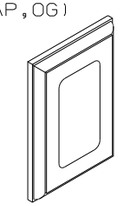
SP-02	SPACER 102568-02-XXX	WOOD SPACER FOR CEILING MOUNTED A/C PREP BOX (US) (WOOD,VYL RAP,OG) 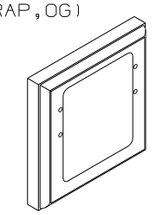
SP-03	SPACER 102568-03-XXX	WOOD SPACER FOR CEILING MOUNTED A/C PREP BOX (CANADA) (WOOD,VYL RAP,OG) 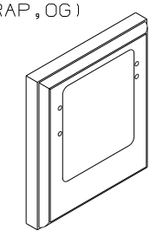
SP-04	SPACER 133713-01-CHT	STANDARD 110V RECEPTACLE SPACER (WOOD,VYL RAP,BEV) 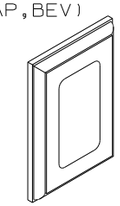
SP-05	SPACER 133713-20-XXX	STANDARD 110V RECEPTACLE SPACER (WOOD,BEV) 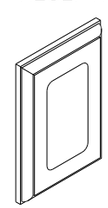
SP-21	SPACER 126052-01-XXX	WOOD SPACER FOR 1 - 110V RECEPTACLE AND 1 - REAR TV (12V) JACK (WOOD,BEV) 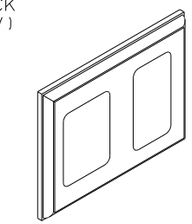

LEGEND

MISC.	SPACER
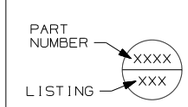	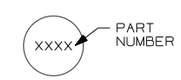

1 APPLY TUBING TO BARE GROUND WIRES.

NOTES:

FIRST USED	96 MH'S
DO NOT SCALE DRAWING	
TITLE:	PART LISTING-ELECTRICAL
SHEET 6	PART NO 121339 REV

DWG NO 121339

PREP-A/C,RECESSED (W/OUT FACTORY A/C)

NO	PART NUMBER	DESCRIPTION
PREP A/C-US	BOX 91910-02-000 COVER 84099-02-CHT LABEL 91243-01-000 SCREW G13-07-12B (4) CONNECTOR 8313-01-000 (3)	BOX AND EQUIPMENT USED FOR A/C PREP (W/OUT FACTORY A/C). US APPLICATION (RECESSED IN ROOF) 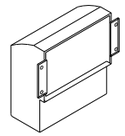
PREP A/C-CAN	BOX 91910-01-000 COVER 84099-02-CHT LABEL 91243-01-000 SCREW G13-07-12B (4) CONNECTOR 8313-01-000 (3)	BOX AND EQUIPMENT USED FOR A/C PREP (W/OUT FACTORY A/C). CANADA APPLICATION (RECESSED IN ROOF) 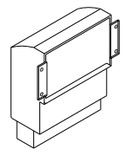

CONNECTION BOX-POWER CORD

NO	PART NUMBER	DESCRIPTION
J-PC 30 J-PC 30-US J-PC 30-CA	BOX 8289-01-000 COVER 8294-01-000 SCREW G67-10-10B (2) WIRE ASM-GROUND 133678-02-000 CONNECTOR 8314-01-000 (3) SCREW-GRND 103291-01-000 CONNECTOR 8356-02-000 CONNECTOR (PC) 8355-01-000	CONNECTION BOX IN POWER CORD COMPT FOR POWER CORD (US & CA APPLICATION) 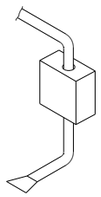

CONNECTION BOX-GENERATOR RECEPTACLE

NO	PART NUMBER	DESCRIPTION
J-RCP 30 J-RCP 30-US J-RCP 30-CA	BOX 8289-01-000 RECEPTACLE 24924-02-000 COVER 69238-01-000 SCREW G67-10-10B (2) WIRE ASM-GROUND 133678-02-000 133678-04-000 SCREW-GRND 103291-01-000 CONNECTOR 8314-01-000 TUBING-VINYL 8041-02-000 △1 (150MM)	CONNECTION BOX IN POWER CORD COMPT FOR THE GENERATOR RECEPTACLE (US & CA APPLICATION) 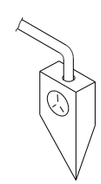

CONNECTION BOX, GENERATOR SERVICE FEED

NO	PART NUMBER	DESCRIPTION
J-GEN 30 J-GEN 30-US J-GEN 30-CA	BOX 8289-01-000 COVER 8294-01-000 SCREW G67-10-10B (2) WIRE ASM-GROUND 133678-02-000 WIRE NUT-GREY 8314-01-000 (3) SCREW-GRND 103291-01-000 CONNECTOR-WIRE 8356-01-000	BOX AND EQUIPMENT USED FOR CONNECTING THE GENERATOR LEADS TO THE SERVICE ENTRANCE WIRES (US & CA APPLICATION) 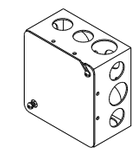

PREP-A/C,SURFACE (W/OUT FACTORY A/C)

NO	PART NUMBER	DESCRIPTION
PREP SURF	BOX 93603-01-000 COVER 53337-01-000 LABEL 91243-01-000 SCREW-GRND 103291-01-000 WIRE-BONDING 8019-01-000 SCREW G11-08-12B (2) TERMINAL 8328-01-000 CONNECTOR 8313-01-000 (2) CONNECTOR 8311-01-000	SURFACE MOUNT, US AND CANADA, BOX AND EQUIPMENT FOR A/C PREP (W/OUT FACTORY A/C). TYPICALLY LOCATED ON OVERHEAD CABINET INNER WALL OR ON CEILING. 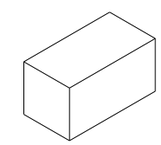

LEGEND

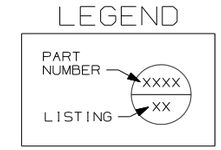

△1 APPLY TUBING TO BARE GROUND WIRES.

NOTES:

FIRST USED	96 MH'S
DO NOT SCALE DRAWING	
TITLE: PART LISTING-ELECTRICAL	
SHEET 7	PART NO 121339 REV

WIRE IDENTIFICATION CHART

CODE/COLOR	FROM:	TO:
A 14 YEL	GALLEY CEILING LAMP SWITCH	GALLEY CEILING LAMP
B 12 YEL	OVERCURRENT PROTECTION (30A BREAKER TYPICAL)	POWER PASSENGER SEAT ("BUDDY SEAT")
C 12 WHT	POWER PASSENGER SEAT	GROUND
D 14 YEL	SHOWER OVHD LAMP SWITCH SEE WIRE PF, START OF 97	SHOWER OVHD LAMP
E 095038-01-	PHONE INPUT JACK	REAR PHONE JACK
F 095038-01-	PHONE INPUT JACK	EXTERIOR PHONE JACK
G 12/ 10 YEL	OVERCURRENT PROTECTION (30A BREAKER TYPICAL)	HIGH SPEED HEATER FAN (USE 10 IF OVER 6' RUN)
H 095038-01-	PHONE INPUT JACK	FRONT PHONE JACK
J 6 BLK	OVERCURRENT PROTECTION (45 OR 55A BREAKER TYP)	COACH 12V PANEL/ CONVERTER BATTERY CHARGE
K 6 BLK	OVERCURRENT PROTECTION (45 OR 55A BREAKER TYP)	COACH 12V PANEL
L 6 GRN	CONVERTER 45 OR 55 AMP	GROUND
M 6 BLK	OVERCURRENT PROTECTION (45 OR 50A BREAKER)	CONVERTER BATTERY CHARGE
N 10 WHT	REFRIGERATOR	GROUND
P 10YEL(BLK)	OVERCURRENT PROTECTION (20A FUSE TYPICAL)	REFRIGERATOR (3 WAY)
R 8 GRN	REFRIGERATOR CHASSIS	GROUND
S 8 OR 6 GRN	GROUND BAR (LEFT SIDE)	CHASSIS GROUND
T 8 OR 6 GRN	GROUND BAR (RIGHT SIDE)	CHASSIS GROUND
U 6 GRN	CONVERTER CHASSIS	GROUND
W 8 GRN	- GROUND STUD	- GROUND STUD

WIRE IDENTIFICATION CHART

CODE/COLOR	FROM:	TO:
X 14 YEL	- CHASSIS BRAKE LAMP CIRCUIT	- CENTER MOUNT BRAKE LAMP
Y 16 YEL	VOLUME CONTROL	RADIO/TV SPEAKER
Z 6 BLK	OVERCURRENT PROTECTION (45 OR 55A BREAKER TYP)	COACH 12V PANEL
AA 16 WHT	SERVICE ENGINE SOON LAMP	VEHICLE SERVICE ENGINE SOON LAMP CIRCUIT
AB 16 WHT	WATER TANK LEVEL SENSORS	GROUND
AC 16 WHT	MAIN HOLDING TANK SENSORS (BLACK WATER)	GROUND
AD 16 WHT	AUXILIARY HOLDING TANK #1 (GRAY WATER)	GROUND
AE 16 WHT	AUXILIARY HOLDING TANK #2 (GRAY WATER)	GROUND
AF 12 YEL	WATER PUMP SWITCH #1	MONITOR PANEL WATER PUMP SWITCH
AG 12 YEL	WATER PUMP SWITCH #1	MONITOR PANEL WATER PUMP SWITCH
AH 14 YEL	OVERCURRENT PROTECTION (10A FUSE TYPICAL)	BRAKE LAMP SWITCH WARNING LAMP (IGNITION RUN/START FED)
AJ 12 WHT	CHASSIS GROUND	BODY GROUND
AK 12 WHT	CHASSIS GROUND	BODY GROUND
AL 12 YEL	HEATER CONTROL (LOW SPEED)	BLOWER MOTOR (LOW SPEED)
AM 12YEL(WHT)	HEATER CONTROL (MEDIUM/LOW SPEED)	BLOWER MOTOR (MEDIUM/LOW SPEED)
AN 12 YEL	HEATER CONTROL (MEDIUM/HIGH SPEED)	BLOWER MOTOR (MEDIUM/HIGH SPEED)
AP 14 YEL	IGNITION SWITCH ACCESSORY FEED	OVERCURRENT PROTECTION (15A FUSE TYPICAL)
AR 14 WHT	HORN, FOG LAMPS	GROUND
AS 18 WHT	DASH RADIO	RIGHT FRONT SPEAKER (NEGATIVE)

WIRE IDENTIFICATION CHART

CODE/COLOR	FROM:	TO:
AT 18 WHT	DASH RADIO	LEFT FRONT SPEAKER (NEGATIVE)
AU 16 YEL	OVERCURRENT PROTECTION (15A BREAKER TYPICAL)	FRONT CARGO LAMP SWITCH (IGNITION ACCESSORY FED)
AW 16 YEL	FRONT CARGO LAMP SWITCH	REAR CARGO LAMP SWITCH
AX 16 YEL	FRONT CARGO LAMP SWITCH	REAR CARGO LAMP SWITCH
AY 16 YEL	REAR CARGO LAMP SWITCH	CARGO LAMPS
BA 14 WHT	WINDSHIELD WIPER MOTOR	GROUND
BB 16 YEL	OVERCURRENT PROTECTION (6A BREAKER TYPICAL)	INSTRUMENT PANEL GAUGES (IGNITION ACCESSORY FED)
BC 14 WHT	INDICATOR LAMPS	GROUND
BD 14 YEL	OVERCURRENT PROTECTION (10A FUSE TYPICAL)	BRAKE LAMP SWITCH
BE 12 WHT	BLOWER MOTOR	GROUND
BF 14 WHT	WASHER BOTTLE PUMP/HORN	GROUND
BG 14 YEL	FUEL SENDER	FUEL GAUGE
BH 14 YEL	RUN ONLY POWER RELAY	ENGINE WIRING
BJ 16 YEL	OVERCURRENT PROTECTION (10A FUSE TYPICAL)	ENGINE WIRING (IGNITION RUN/START FED)
BK 14 YEL	OVERCURRENT PROTECTION (10A FUSE TYPICAL)	HORN RELAY FEED
BL 16 WHT	CIGAR LIGHTER	GROUND
BM 16 YEL	CHASSIS BATTERY POWER	CIGAR LIGHTER
BN 16 YEL	ACCESSORY POWER	SPOTLAMP
BP 14 WHT	POWER MIRROR	GROUND

WIRE IDENTIFICATION CHART

CODE/COLOR	FROM:	TO:
BR 14 YEL	POWER MIRROR (RIGHT SIDE)	POWER MIRROR CONTROL SWITCH
BS 14 YEL	POWER MIRROR HEAT SWITCH	POWER MIRRORS
BT 14 YEL	POWER MIRROR (LEFT SIDE)	POWER MIRROR CONTROL SWITCH
BU 14 YEL	RUN ONLY POWER	POWER MIRROR HEAT/ CONTROL SWITCHES
BW 12 YEL	IGNITION SWITCH	ACCESSORY CIRCUIT FEED
BX 12YEL(ORN)	IGNITION SWITCH RUN ONLY SOURCE	GENERAL(TURN, BACK UP,DASH IGNITION CIRCUIT,ETC)
BY 12YEL/8BLK	OVERCURRENT PROTECTION (16GA FUSELINK)(8GA PASSTHRU)	CHASSIS BATTERY SOURCE(AUTO AC BLOWER,POWER DRIVER SEAT,ETC)
CA 12 YEL	OVERCURRENT PROTECTION (16GA FUSELINK TYPICAL)	CHASSIS BATTERY SOURCE
CB 12 YEL	IGNITION SWITCH START SOURCE	START CIRCUIT SOURCE
CC 16 YEL	ALTERNATOR	ALTERNATOR WARNING LAMP
CD 16 YEL	OIL PRESSURE WARNING SENDER	OIL PRESSURE WARNING LAMP
CE 16 YEL	WATER TEMPERATURE WARNING SENDER	WATER TEMPERATURE WARNING LAMP
CF 14 YEL	REAR TV JACK	POWER FEED SWITCH
CG 14 YEL	CLUTCH/NEUTRAL SWITCH	START ISOLATION RELAY
CH 14 YEL	START RELAY	ENGINE WIRING
CJ 14 YEL	WINDSHIELD WIPER/WASHER CONTROL SWITCH	WINDSHIELD WASHER PUMP
CK 16 YEL	TELEVISION	SPEAKER (POSITIVE)
CL 16 WHT	TELEVISION	SPEAKER (NEGATIVE)
CM 10 YEL	OVERCURRENT PROTECTION (15A BREAKER TYPICAL)	INVERTER FEED

WIRE IDENTIFICATION CHART

CODE/COLOR	FROM:	TO:
CN 10 WHT	INVERTER	GROUND
CP 12 WHT	INVERTER CHASSIS	GROUND
CR 16 WHT	VEHICLE CHECK ENGINE LAMP CIRCUIT	CHECK ENGINE LAMP
CS 16 WHT	REMOTE THERMOSTAT (RC TERM/ORG EXPORT AIR)	GROUND
CT 16 YEL	DAYTIME RUNNING LAMP MODULE OUTPUT(PIN 30)	LOW BEAM HEADLAMP CIRCUIT
CU 16 YEL	DAYTIME RUNNING LAMP MODULE ENABLE(PIN 85)	RUN/START CIRCUIT
CW 14 YEL	DAYTIME RUNNING LAMP MODULE POWER(PIN 87A)	CHASSIS BATTERY POWER
CX 16 WHT	DAYTIME RUNNING LAMP MODULE GROUND(PIN 87)	GROUND
CY 16 YEL	DAYTIME RUNNING LAMP MODULE HIGH BEAM DISABLE(PIN 86)	HIGH BEAM HEADLAMP CIRCUIT
DA 12 YEL	SHOWER SUMP SYSTEM PUMP SWITCH	SHOWER SUMP SYSTEM PUMP
DB 12 WHT	SHOWER SUMP SYSTEM PUMP	GROUND
DC 16 YEL	REAR ROOF AIR CONDITIONER EXHAUST CIRCUIT	THERMOSTAT
DD 16 YEL	REAR ROOF AIR CONDITIONER COOL CIRCUIT	THERMOSTAT (Y TERM-EXPORT AIR/YEL)
DE 16 YEL	REAR ROOF AIR CONDITIONER HIGH SPEED FAN CIRCUIT	THERMOSTAT (H TERM-EXPORT AIR/BLU)
DF 16 YEL	REAR ROOF AIR CONDITIONER LOW SPEED FAN CIRCUIT	THERMOSTAT (G TERM-EXPORT AIR/RED)
DG 12YEL(GRY)	IGNITION SWITCH	ACCESSORY/RUN FEED
DH 14 YEL	EMERGENCY SHUTDOWN GAUGE	FUEL SOLENOID (DIESEL ENGINE)
DJ 16 YEL	TV/RADIO SPEAKER SWITCHING RELAY OUTPUT	LEFT REAR SPEAKER POSITIVE
DK 16 WHT	TV/RADIO SPEAKER SWITCHING RELAY OUTPUT	LEFT REAR SPEAKER NEGATIVE

WIRE IDENTIFICATION CHART

CODE/COLOR	FROM:	TO:
DL 16 YEL	TV/RADIO SPEAKER SWITCHING RELAY OUTPUT	RIGHT REAR SPEAKER POSITIVE
DM 16 WHT	TV/RADIO SPEAKER SWITCHING RELAY OUTPUT	RIGHT REAR SPEAKER NEGATIVE
DN 10 YEL	BATTERY DISCONNECT RELAY	CIRCUIT BREAKER SLIDEOUT ROOM CIRCUIT BRKR
DP 14 YEL	TV/RADIO SPEAKER FEED SELECT SWITCH	TV/RADIO SPEAKER SWITCHING RELAY COIL INPUT OR AMPLIFIER
DR 16 YEL	HWH WIRING OR KWIKEE FRONT SLIDE MODULE	SLIDEOUT SWITCH (ROOM ONE EXTEND)
DS 16 WHT	CONTROL MODULE (FRONT SLIDE)(GROUND)	SLIDEOUT SWITCH (FRONT SLIDEOUT)
DT 16 YEL	SLIDEOUT ROOM RELAY (PIN 30)	SLIDEOUT ROOM CONTROL SWITCH
DU 16 YEL	HWH WIRING OR KWIKEE FRONT SLIDE MODULE	SLIDEOUT SWITCH (ROOM ONE RETRACT)
DW 16 WHT	SLIDEOUT ROOM SWITCH (G) (SWITCHED GROUND TO PUMP)	HWH WIRING (SWITCHED GROUND TO PUMP)
DX 16 WHT	HWH WIRING (G) (GROUND)	SLIDEOUT ROOM SWITCH (GROUND)
DY 16 WHT	HWH WIRING (G) (JACK SENSE; SWITCHED GROUND)	SLIDEOUT ROOM RELAY (JACK SENSE; SWITCHED GROUND)
EA 16 YEL	HWH WIRING (G) (ACCESSORY POWER)	SLIDEOUT ROOM RELAY (ACCESSORY POWER)
EB 16 YEL	SLIDEOUT ROOM RELAY (G) (SWITCHED ACCESSORY POWER)	FRT/RR SLIDEOUT ROOM SWITCH (SWITCHED EXTEND/RETRACT PWR)
EC 10 YEL	CHASSIS BATTERY POWER SOURCE (BATTERY MODE SOLENOID POST)	THRU FUSE TO AMP SOURCE SELECT RELAY(PIN 87)(OPTION 21V,95 Q)
ED 10 YEL	COACH BATTERY POWER SOURCE (BATTERY MODE SOLENOID POST)	THRU FUSE TO AMP SOURCE SELECT RELAY(PIN 87A)(OPTION 21V,95Q)
EE 16 YEL	AIR RIDE SUSPENSION LEFT DOWN SWITCH POSITION	AIR RIDE SUSPENSION LEFT HEIGHT CONTROL BOX
EF 16 YEL	AIR RIDE SUSPENSION LEFT UP SWITCH POSITION	AIR RIDE SUSPENSION LEFT HEIGHT CONTROL BOX
EG 16 WHT	AIR RIDE SUSPENSION WIRE ASM GROUND	AIR RIDE SUSPENSION CONTROL LAMP GROUNDS
EH 16 YEL	AIR RIDE SUSPENSION RIGHT DOWN SWITCH POSITION	AIR RIDE SUSPENSION RIGHT HEIGHT CONTROL BOX

WIRE IDENTIFICATION CHART

CODE/COLOR	FROM:	TO:
EJ 16 YEL	AIR RIDE SUSPENSION RIGHT UP SWITCH POSITION	AIR RIDE SUSPENSION RIGHT HEIGHT CONTROL BOX
EK 16 YEL	AIR RIDE SUSPENSION AUTO MODE SWITCH POSITION	AIR RIDE SUSPENSION HEIGHT CONTROL BOXES
EL 16 YEL	RUN ONLY POWER	AIR RIDE SUSPENSION AUTO/MANUAL MODE SWITCH
EM 16 YEL	AIR RIDE SUSPENSION COMPRESSOR	COMPRESSOR ON WARNING LAMP
EN 16 YEL	AIR RIDE SUSPENSION MANUAL MODE SWITCH POSITION	LEVEL CONTROL SWITCHES AND INDICATOR LAMP
EP 14 YEL	OVERCURRENT PROTECTION (15A BREAKER TYPICAL)	SPOTLAMP
ER 16 YEL	OVERCURRENT PROTECTION (6A BREAKER TYPICAL)	ELECTRIC STEP KILL SWITCH
ES 16 YEL	ELECTRIC STEP KILL SWITCH	ELECTRIC STEP
ET 16 YEL	OVERCURRENT PROTECTION (6A BREAKER TYPICAL)	REFRIGERATOR (2 WAY)
EU 16 WHT	REFRIGERATOR (2 WAY)	GROUND
EW 14 YEL	FUEL HEATER SWITCH	FUEL HEATER (DIESEL ENGINE)
EX 14 YEL	TELEVISION POWER SWITCH	TELEVISION WALL PLATE
EY 12YELLTBLU	OVERCURRENT PROTECTION (16GA FUSELINK TYPICAL)	IGNITION SWITCH FEED #2
FA 14 YEL	DRIVER'S DOOR PASSENGER SIDE POWER WINDOW SWITCH(DOWN,PIN2)	PASSENGER'S POWER WINDOW SWITCH(PIN 2)
FB 14 YEL	DRIVER'S DOOR PASSENGER SIDE POWER WINDOW SWITCH(UP,PIN 4)	PASSENGER'S POWER WINDOW SWITCH(PIN 4)
FC 14 YEL	PASSENGER'S DOOR POWER WINDOW SWITCH(DOWN,PIN 1)	PASSENGER'S DOOR POWER WINDOW MOTOR(DOWN)
FD 14 YEL	PASSENGER'S DOOR POWER WINDOW SWITCH(UP,PIN 5)	PASSENGER'S DOOR POWER WINDOW MOTOR(UP)
FG 10 YEL	AMPLIFIER POWER SOURCE SELECT RELAY (PIN 30)	AMPLIFIER POWER FEED (DELUXE SOUND SYSTEM,95 LUXOR)
FH 10 WHT	AMPLIFIER (DELUXE SOUND SYSTEM,95 LUXOR)	GROUND

WIRE IDENTIFICATION CHART

CODE/COLOR	FROM:	TO:
FJ 12 YEL	WATER PUMP SWITCH #2 (THREE SWITCH SYSTEM)	WATER PUMP SWITCH #1 (THREE SWITCH SYSTEM)
FK 12 YEL	WATER PUMP SWITCH #2 (THREE SWITCH SYSTEM)	WATER PUMP SWITCH #1 (THREE SWITCH SYSTEM)
FL 14 YEL	SECOND PORCH LAMP SWITCH	SECOND PORCH LAMP
FM 14 WHT	SOLENOID MOUNTING BOLT	GROUND
FN 16 YEL	SOURCE SELECTOR SWITCH (DELUXE SOUND SYSTEM,95 LUXOR)	AMP & EQUALIZER REMOTE TRIGGER (DELUXE SOUND SYSTEM,95 LUXOR)
FP 16 YEL	EXHAUST BRAKE SWITCH (DIESEL PUSHER CHASSIS)	CHASSIS EXHAUST BRAKE HARNESS & BRAKE ON DASH INDICATOR LAMP
FR 14 YEL	FORD RUN/ACCESSORY IGNITON CIRCUIT(WHT/PUR,10A FUSED)	DOCKING LAMPS, RELAY TRIGGER, REAR MONITOR CAMERA FEED
FS 14 YEL	DOCKING LAMPS RELAY(PIN 87)	DOCKING LAMPS
FT 14 WHT	DOCKING LAMPS	GROUND
FU 14 YEL	AUTOMOTIVE AIR WIRING	FORD A/C COMPRESSOR CLUTCH SWITCH CIRCUIT
FW 14 YEL	DOCKING LAMPS SWITCH	DOCKING LAMPS RELAY(PIN 30)
FX 12 YEL	OVERCURRENT PROTECTION (30A BRKR OR FUSE)	POWER DRIVER SEAT (I.E.,6 WAY)
FY 12 WHT	POWER DRIVER SEAT (I.E.,6 WAY)	GROUND
GA 14 YEL	WATER SYSTEM WINTERIZATION SWITCH	WINTERIZATION VALVE
GB 14 YEL	WATER HEATER BYPASS SWITCH	WATER HEATER BYPASS VALVE
GC 16 YEL	SLIDEOUT ROOM SPDT SWITCH (M) (SWITCHED WIRE)	HWH WIRING (SWITCHED WIRE)
GD 16 YEL	WIPER CONTROL MODULE	WIPER MOTOR (S TERMINAL)
GE 16 YEL	SWITCHED DOME LAMP FEED	DOME LAMP
GF 16 WHT	COMMON REAR CHANNEL SPEAKER RETURN	REAR SPEAKERS

WIRE IDENTIFICATION CHART

CODE/COLOR	FROM:	TO:
GG 16 YEL	RADIO REMOTE TRIGGER (DELUXE SOUND OPTION)	SOURCE SELECTOR SWITCH (LUXOR)
GH 14 WHT	GLOW PLUG WAIT LAMP (DIESEL ENGINE)	ENGINE SENDER
GJ 16 YEL	COACH BATTERY POWER (UPSTREAM OF DISCONNECT)	LP DETECTOR AND/OR SOLAR PANEL WIRING OVERCURRENT PROTECTION
GK 14 YEL	AIR HORN SWITCH	CHASSIS HORN
GL 16 WHT	WATER/HOLDING TANKS LEVEL SENSORS	GROUND
GM 16 YEL	JET AIR RIDE SUSPENSION PRESSURE SENSORS	CHECK REAR AIR SUSPENSION DASH WARNING LAMP
GN 16 YEL	REAR TV SPEAKER OUTPUT (POSITIVE)	REAR TV SPEAKER (POSITIVE)
GP 16 WHT	REAR TV SPEAKER OUTPUT (NEGATIVE)	REAR TV SPEAKER (NEGATIVE)
GR 14 YEL	THERMOSTATICALLY CONTROLLED ROOF VENT (SEND)	THERMOSTAT (RETURN)
GS 14 YEL	THERMOSTATICALLY CONTROLLED ROOF VENT (RETURN)	THERMOSTAT (RETURN)
GT 16 YEL	RADIO POWER SWITCH (MEMORY FEED)	RADIO (MEMORY FEED)
GU 16 YEL	DEFOG MODULE OUTPUT	DEFOG RELAY, INDICATOR LAMP
GW 16 WHT	DEFOG SWITCH ON/OFF	DEFOG MODULE ON/OFF
GX 16/12 WHT	STEP COVER SWITCH (REF AAA-16/KA-12)	GROUND
GY 12 YEL	DEFOG RELAY	DEFOG UNIT
HA 14 YEL	READING LAMPS SWITCH (93 VANS)	READING LAMPS
HB 14 YEL	"MOOD" LAMPS SWITCH (93 VANS)	"MOOD" LAMPS
HC 14 YEL	12V POWER SOURCE (93 VANS)	OVERCURRENT PROTECTION (15A FUSE TYPICAL)
HD 14 YEL	SOFA SLIDE MOTOR POSITIVE (94 VANS)	SOFA MONOPLEX CONTROLLER

WIRE IDENTIFICATION CHART

CODE/COLOR	FROM:	TO:
HE 14 WHT	SOFA SLIDE MOTOR NEGATIVE (94 VANS)	SOFA MONOPLEX CONTROLLER
HF 14 YEL	SOFA RECLINE MOTOR POSITIVE (94 VANS)	SOFA MONOPLEX CONTROLLER
HG 14 WHT	SOFA RECLINE MOTOR NEGATIVE (94 VANS)	SOFA MONOPLEX CONTROLLER
HH 16 YEL	SOFA MONOPLEX SWITCH (94 VANS)	SOFA MONOPLEX CONTROLLER
HJ 16 WHT	SOFA MONOPLEX SWITCH (94 VANS)	GROUND
HK 14 WHT	SOFA MONOPLEX CONTROLLER (94 VANS)	GROUND
HL 14 YEL	FLOOD LAMP SWITCH (94 VANS)	FLOOD LAMP
HM 16 YEL	REAR TV SPEAKER OUTPUT (POSITIVE)	REAR TV SPEAKER (POSITIVE)
HN 16 WHT	REAR TV SPEAKER OUTPUT (NEGATIVE)	REAR TV SPEAKER (NEGATIVE)
HP 16 YEL	OVERCURRENT PROTECTION (94 VANS)	REAR AC
HR 14 YEL	SWITCH (94 1200 MODEL VAN)	12VOLT RECEPTACLE
HS 16 YEL	SOLAR PANEL (1HS INDICATOR TO BATTERY)	COACH BATTERY THRU OVERCURRENT PROTECTION
HT 16 WHT	SOLAR PANEL (1HT INDICATOR TO GROUND)	GROUND
HU 16 YEL	GENERATOR SWITCH (LED)	GENERATOR (POSITIVE SIGNAL)
HW 16 YEL	LICENSE PLATE LAMP FEED	LICENSE PLATE LAMP
HX 16 YEL	CHASSIS CLEARANCE LAMP CRT #2	CLEARANCE/MARKER LAMPS
HY 12 WHT	DEFOG UNIT	GROUND
JA 14 YEL	OVERCURRENT PROTECTION (15A FUSE/BREAKER TYPICAL)	WATER PUMP,MONITOR PANEL,ETC ("CLEAN CIRCUIT",REF JP)
JB 14 YEL	OVERCURRENT PROTECTION (15A FUSE/BREAKER TYPICAL)	FURNACE, ROOF VENT,ETC (REF JM)

WIRE IDENTIFICATION CHART

CODE/COLOR	FROM:	TO:
JC 14 YEL	OVERCURRENT PROTECTION (15A FUSE/BREAKER TYPICAL)	COACH LIGHTING, ETC CIRCUIT #1 (REF NC)
JD 14 YEL	OVERCURRENT PROTECTION (15A FUSE/BREAKER TYPICAL)	COACH LIGHTING, ETC CIRCUIT #2 (REF ND)
JE 14 YEL	OVERCURRENT PROTECTION (15A FUSE/BREAKER TYPICAL)	COACH LIGHTING, ETC CIRCUIT #3 (REF NE)
JF 14 YEL	OVERCURRENT PROTECTION (15A FUSE/BREAKER TYPICAL)	COACH LIGHTING, ETC CIRCUIT #4 (REF NF)
JG 14 YEL	OVERCURRENT PROTECTION (15A FUSE/BREAKER TYPICAL)	COACH LIGHTING, ETC(ALT CLEAN) CIRCUIT #5 (REF JN)
JH 14 YEL	MAIN FURNACE (12V POWER)	MAIN FURNACE THERMOSTAT
JJ 14 YEL	MAIN FURNACE (HEAT)	MAIN FURNACE THERMOSTAT
JK 14 YEL	AUXILIARY FURNACE	AUXILIARY FURNACE THERMOSTAT
JL 14 YEL	AUXILIARY FURNACE	AUXILIARY FURNACE THERMOSTAT
JM 14 WHT	MAIN FURNACE	GROUND
JN 14 WHT	COACH LIGHTING CIRCUIT #5 (REF JG)	GROUND(ALTERNATE CLEAN CIRCUIT FOR LINEAR CONVERTER)
JP 14 WHT	"CLEAN CIRCUIT" DEVICES (REF JA)	GROUND
JR 16 YEL	MONITOR PANEL	LP TANK #2 LEVEL SENSOR
JS 12 YEL	MONITOR PANEL WATER PUMP SWITCH	WATER PUMP
JT 16 YEL	MONITOR PANEL	LP TANK #1 LEVEL SENSOR
JU 14 YEL	MONITOR PANEL WATER HEATER SWITCH	WATER HEATER (BLU)
JW 14 YEL	MONITOR PANEL WATER HEATER SWITCH	WATER HEATER (BRN)
JX 14 WHT	WATER HEATER	GROUND
JY 12 WHT	WATER PUMP	GROUND

WIRE IDENTIFICATION CHART

CODE/COLOR	FROM:	TO:
KA 12 YEL	OVERCURRENT PROTECTION (25A BREAKER TYPICAL)	ELECTRIC STEP BATTERY POWER
KB 10 YEL	OVERCURRENT PROTECTION (25A BREAKER TYPICAL)	ELECTRIC STEP KILL SWITCH (OLD STEP WIRING STYLE)
KC 10 YEL	ELECTRIC STEP KILL SWITCH (OLD STEP WIRING STYLE)	ELECTRIC STEP
KD 18 WHT	ELECTRIC STEP DOOR JAMB SWITCH	ELECTRIC STEP
KE 14 YEL	RUN ONLY POWER SOURCE	GENERAL PURPOSE(RELAY TRIGGER, REAR AUTO HTR,DRL,MONITOR,ETC)
KF 16 WHT	COACH BATTERY DISCONNECT RELAY SWITCH	GROUND
KG 14 YEL	POWER LIFT VENT (BLU)	POWER LIFT SWITCH(UP)
KH 14 YEL	POWER LIFT VENT (RED)	POWER LIFT SWITCH(DOWN)
KJ 14 YEL	POWER LIFT VENT (BLK)	FAN SWITCH
KK 18 YEL	REAR STEREO	RIGHT SPEAKER (POSITIVE)
KL 18 WHT	REAR STEREO	RIGHT SPEAKER (NEGATIVE)
KM 14 YEL	POWER LIFT VENT LAMP	LAMP SWITCH
KN 18 YEL	REAR STEREO	LEFT SPEAKER (POSITIVE)
KP 18 WHT	REAR STEREO	LEFT SPEAKER (NEGATIVE)
KR 14 WHT	REAR STEREO ANTENNA	GROUND
KS 14 YEL	REAR AUTO HEATER SWITCH (HIGH SPEED)	REAR AUTO HEATER
KT 14 YEL	REAR AUTO HEATER SWITCH (MEDIUM SPEED)	REAR AUTO HEATER
KU 14 YEL	REAR AUTO HEATER SWITCH (LOW SPEED)	REAR AUTO HEATER
KW 18 YEL	DASH RADIO	RIGHT FRONT SPEAKER (POSITIVE)

WIRE IDENTIFICATION CHART

CODE/COLOR	FROM:	TO:
KX 18 YEL	DASH RADIO	RIGHT REAR SPEAKER (POSITIVE)
KY 18 YEL	DASH RADIO	LEFT FRONT SPEAKER (POSITIVE)
LA 18 YEL	DASH RADIO	LEFT REAR SPEAKER (POSITIVE)
LB 18 WHT	DASH RADIO	RIGHT REAR SPEAKER (NEGATIVE)
LC 18 WHT	DASH RADIO	LEFT REAR SPEAKER (NEGATIVE)
LD 14 YEL	IGNITION SWITCH ACCESSORY POWER SOURCE	GENERAL PURPOSE(AUX FANS,RELAY TRIGGER,ETC.)
LE 14 YEL	AUXILIARY DEFROST FANS SWITCH (HIGH SPEED)	AUXILIARY DEFROST FANS (BLK)
LF 14 YEL	AUXILIARY DEFROST FANS SWITCH (LOW SPEED)	AUXILIARY DEFROST FANS (RED)
LG 16 YEL	COACH BATTERY DISCONNECT RELAY (TERMINAL I)	COACH BATTERY DISCONNECT RELAY SWITCH
LH 16 YEL	COACH BATTERY DISCONNECT RELAY (TERMINAL S)	COACH BATTERY DISCONNECT RELAY SWITCH
LJ 16 YEL	COACH BATTERY DISCONNECT RELAY BATTERY SIDE FUSE FEED	COACH BATTERY DISCONNECT RELAY SWITCH
LK 16 YEL	COACH BATTERY DISCONNECT RELAY LOAD SIDE FUSE FEED	COACH BATTERY DISCONNECT RELAY SWITCH/INDICATOR LAMP
LL 16 WHT	GENERATOR SWITCH (START)	GENERATOR (RED)
LM 16 WHT	GENERATOR SWITCH (STOP)	GENERATOR (ORN)
LN 16 WHT	GENERATOR SWITCH/INDICATOR (GROUND)	GENERATOR (GRN)
LP 16 YEL	GENERATOR SWITCH/INDICATOR (RUN)	GENERATOR (BLU)
LR 14 YEL	BATTERY MODE SWITCH (AUX START SWITCH)	BATTERY MODE SOLENOID (AUX START SOLENOID)
LS 12 YEL	OVERCURRENT PROTECTION 20A BREAKER TYPICAL,COACH FEED	GENERAL PURPOSE(BATTERY MODE, RADIO POWER,BATTERY CONDITION)
LT 16 YEL	BATTERY CONDITION SWITCH	VOLTMETER (POWER FEED)

WIRE IDENTIFICATION CHART

CODE/COLOR	FROM:	TO:
LU 14 YEL	CHASSIS BRAKE LAMP CIRCUIT	VEHICLE BRAKES, TAG AXLE CONTROL MODULE,ETC.
LW 14 YEL	WIPER CONTROL MODULE (PARK)	WINDSHIELD WIPER MOTOR (FRONT)
LX 14 YEL	WIPER CONTROL MODULE (LOW SPEED)	WINDSHIELD WIPER MOTOR (FRONT)
LY 14 YEL	WIPER CONTROL MODULE (HIGH SPEED)	WINDSHIELD WIPER MOTOR (FRONT)
MA 14 YEL	WIPER CONTROL MODULE (WASHER BOTTLE PUMP)	WINDSHIELD WASHER BOTTLE PUMP (FRONT)
MB 14 YEL	CHASSIS WINDSHIELD WIPER FEED CIRCUIT	OVERCURRENT PROTECTION (6A BREAKER TYPICAL)
MC 16 WHT	INSTRUMENT PANEL LAMPS	GROUND
MD 14 YEL	OVERCURRENT PROTECTION (15A BREAKER TYPICAL)	REMOTE MIRROR RELAY/POWER WINDOW FEED
ME 14 YEL	OVERCURRENT PROTECTION (15A BREAKER TYPICAL)	AIR HORN RELAY FEED/ MARKER LAMPS RELAY FEED
MF 14 YEL	OVERCURRENT PROTECTION (15A BREAKER TYPICAL)	FOG LAMP RELAY FEED/ SPOT LAMP FEED
MG 14 WHT	GENERAL PURPOSE(RELAYS,DASH DEVICES,ETC.)	GROUND
MH 16 WHT	CHASSIS CHOKE LAMP INDICATOR CIRCUIT	CHOKE LAMP
MJ 14 YEL	CHASSIS WINDSHIELD WIPER FEED CIRCUIT	WIPER CONTROL MODULE (POWER FEED)
MK 14 YEL	CHASSIS BATTERY POWER FEED CIRCUIT	GENERAL PURPOSE(CIGAR LIGHTER, DOME/COURTESY LAMPS,ETC)
ML 16 YEL	CHASSIS INSTRUMENT PANEL LAMPS FEED CIRCUIT	INSTRUMENT PANEL LAMPS
MM 14 YEL	CHASSIS CLEARANCE LAMP CRT #1 (BRN TYPICAL)	CLEARANCE/MARKER LAMPS
MN 14 WHT	DOME LAMP SWITCHED GROUND	DOME LAMP SWITCH(DOOR JAMB, INSTRUMENT PANEL SWITCH,ETC)
MP 18/16 WHT	ELEC STEP DOOR JAMB SWITCH, LP TANK SENDER, ETC	GROUND
MR 14 YEL	REAR WINDOW WIPER SWITCH (LOW SPEED)	REAR WINDOW WIPER MOTOR (LOW SPEED)

WIRE IDENTIFICATION CHART

CODE/COLOR	FROM:	TO:
MS 14 WHT	CLEARANCE/MARKER LAMPS	GROUND
MT 8 WHT	ELECTRIC STEP	GROUND
MU 14 WHT	GENERAL PURPOSE(CIGAR LIGHTER, DOME LAMPS,12 V OUTLETS,ETC)	GROUND
MW 16 YEL	VEHICLE CHECK ENGINE LAMP CIRCUIT	CHECK ENGINE LAMP
MX 16 YEL	WINDSHIELD WIPER SWITCH	WIPER RELAY
MY 14 YEL	VEHICLE HEADLAMP FEED CIRCUIT	DIMMER MODULE
NA 14 YEL	VEHICLE HEADLAMP LOW BEAM CIRCUIT	DIMMER MODULE
NB 14 YEL	VEHICLE HEADLAMP HIGH BEAM CIRCUIT	DIMMER MODULE
NC 14 WHT	COACH LIGHTING CIRCUIT #1 (REF JC)	GROUND
ND 14 WHT	COACH LIGHTING CIRCUIT #2 (REF JD)	GROUND
NE 14 WHT	COACH LIGHTING CIRCUIT #3 (REF JE)	GROUND
NF 14 WHT	COACH LIGHTING CIRCUIT #4 (REF JF)	GROUND
NG 16 YEL	FOG LAMPS SWITCH	FOG LAMPS RELAY
NH 14 YEL	FOG LAMPS RELAY	FOG LAMPS
NJ 16 YEL	CHASSIS HORN FEED CIRCUIT	AIR HORN SWITCH
NK 14 YEL	AIR HORN SWITCH	AIR HORN AIR TANK AIR RELEASE VALVE
NL 14 YEL	AR HORN RELAY	AIR HORN AIR COMPRESSOR
NM 14 YEL	OVERCURRENT PROTECTION (15A FUSE TYPICAL)	COACH LIGHTING CIRCUIT #6 (REF PM)
NN 16 YEL	LEFT POWER MIRROR MOTOR (HORIZONTAL CONTROL,YEL)	POWER MIRROR CONTROL SWITCH

WIRE IDENTIFICATION CHART

CODE/COLOR	FROM:	TO:
NR 16 YEL	LEFT POWER MIRROR (VERTICAL CONTROL, WHT)	POWER MIRROR CONTROL SWITCH
NS 14 YEL	POWER MIRROR HEATER SWITCH	POWER MIRRORS (RED)
NT 14 YEL	POWER MIRROR RELAY	POWER MIRROR CONTROL SWITCH
NU 14 YEL	AISLE LAMPS SWITCH #1	AISLE LAMPS SWITCH #2
NW 14 YEL	FRONT COMPARTMENT LAMPS SWITCH	COMPARTMENT LAMPS
NX 14 YEL	INTERSTATE COMMERCE COMMITTEE COURTESY BLINK SWITCH	CLEARANCE LAMPS
NY 14 YEL	AISLE LAMPS SWITCH #1	AISLE LAMPS SWITCH #2
PA 14 WHT	REAR AUTO HEATER	GROUND
PB 14 WHT	REAR WINDOW WIPER MOTOR	GROUND
PC 14 YEL	BEDROOM CEILING LAMP SWITCH	BEDROOM CEILING LAMP
PD 14 YEL	MAKE UP LAMP #1 SWITCH	MAKE UP LAMP #1
PE 14 YEL	BATH CEILING LAMP SWITCH	BATH CEILING LAMP
PF 14 YEL	SHOWER LAMP SWITCH WIRE D WAS FIRST USED ON C'S	SHOWER LAMP
PG 14 YEL	WARDROBE LAMP SWITCH	WARDROBE LAMP
PH 14 YEL	AISLE LAMPS SWITCH	AISLE LAMPS
PJ 14 YEL	PORCH LAMP SWITCH	PORCH LAMP
PK 14 YEL	STRIP LAMP SWITCH	STRIP LAMP
PL 14 YEL	FRONT CEILING LAMP SWITCH	FRONT CEILING LAMP
PM 14 WHT	COACH LIGHTING CIRCUIT #6 (REF NM)	GROUND

WIRE IDENTIFICATION CHART

CODE/COLOR	FROM:	TO:
PN 16 WHT	RIGHT POWER MIRROR (COMMON,BLK)	POWER MIRROR CONTROL SWITCH
PP 16 YEL	RIGHT POWER MIRROR (HORIZONTAL CONTROL,YEL)	POWER MIRROR CONTROL SWITCH
PR 16 YEL	RIGHT POWER MIRROR (VERTICAL CONTROL,WHT)	POWER MIRROR CONTROL SWITCH
PS 14 YEL	MAP LAMP SWITCH	MAP LAMP
PT 14 YEL	BEVERAGE TRAY LAMP SWITCH	BEVERAGE TRAY LAMP
PU 14 YEL	DUMP LAMP SWITCH	DUMP LAMP
PW 14 YEL	OVERCURRENT PROTECTION (15A BREAKER TYPICAL)	POWER DOOR LOCK/UNLOCK RELAY (PIN 30)
PX 16 YEL	POWER DOOR LOCK SWITCH (LOCK) (PIN 1)	POWER DOOR LOCK RELAY (PIN 86)
PY 16 YEL	POWER DOOR LOCK SWITCH (UNLOCK) (PIN 5)	POWER DOOR UNLOCK RELAY (PIN 86)
RA 14 YEL	VEHICLE LEFT FRONT TURN SIGNAL CIRCUIT	LEFT FRONT TURN SIGNAL/MARKER LAMP
RB 14 YEL	VEHICLE RIGHT FRONT TURN SIGNAL CIRCUIT	RIGHT FRONT TURN SIGNAL/MARKER LAMP
RC 14 WHT	FRONT AUTOMOTIVE LAMPS(TURN, MARKER,ETC)	GROUND
RD 14 YEL	OVERCURRENT PROTECTION (15 A FUSE TYPICAL)	HAZARD FLASHER, HORN RELAY
RE 12 YEL	RADIATOR FAN RELAY#1 (COMMON)	RADIATOR FAN #1
RF 12 YEL	RADIATOR FAN RELAY #2 (COMMON)	RADIATOR FAN #2
RG 14 WHT	RADIATOR FAN THERMOSTAT SWITCH	RADIATOR FAN RELAYS (COILS,TRIGGER)
RH 12YEL(BLK)	OVERCURRENT PROTECTION (25A BREAKER TYPICAL)	RADIATOR FAN RELAY #1 (NORMALLY OPEN)
RJ 12YEL(BLK)	OVERCURRENT PROTECTION (25A BREAKER TYPICAL)	RADIATOR FAN RELAY #2 (NORMALLY OPEN)
RK 12 WHT	RADIATOR FAN #1	GROUND

WIRE IDENTIFICATION CHART

CODE/COLOR	FROM:	TO:
RL 12 WHT	RADIATOR FAN #2	GROUND
RM 14 WHT	VEHICLE IGNITION SWITCH GROUND DURING START CIRCUIT	BULB CHECK(LOW TAG AIR,PARK BRAKE,ETC)
RN 14 YEL	AUTOMOTIVE AIR CONDITIONER THERMOSTAT CUTOFF SWITCH	AUTOMOTIVE AIR CONDITIONER COMPRESSOR CLUTCH
RP 14 YEL	AUTOMOTIVE AIR CONDITIONER COOLANT FAN CONTROL	COOLANT FAN RELAY
RR 14 YEL	BRAKE LAMP SWITCH	TURN SIGNAL SWITCH
RS 14 YEL	HEADLAMP SWITCH INSTRUMENT PANEL LAMP FEED SWITCH	OVERCURRENT PROTECTION (5A FUSE TYPICAL)
RT 14 YEL	HORN RELAY (COMMON)	HORN
RU 14 YEL	HORN RELAY (COIL)	HORN SWITCH
RW 14 YEL	HAZARD FLASHER	TURN SIGNAL SWITCH
RX 14 YEL	EUL WARNING LAMP	EUL MODULE
RY 14 WHT	INSTRUMENT CLUSTER/ EUL MODULE	GROUND
SA 14 YEL	ENGINE WATER TEMPERATURE SENDER	ENGINE WATER TEMPERATURE GAUGE
SB 14 YEL	ENGINE OIL PRESSURE SENDER	ENGINE OIL PRESSURE GAUGE
SC 14 YEL	VEHICLE RIGHT REAR TURN SIGNAL/BRAKE LAMP CIRCUIT	RIGHT REAR TURN SIGNAL/ BRAKE LAMPS
SD 14 YEL	VEHICLE LEFT REAR TURN SIGNAL/BRAKE LAMP CIRCUIT	LEFT REAR TURN SIGNAL/ BRAKE LAMPS
SE 16YEL(WHT)	SPEED SENSOR (TWISTED PAIR)	SPEEDOMETER AND SPEED CONTROL MODULE
SF 16WHT(BLK)	SPEED SENSOR (TWISTED PAIR)	SPEEDOMETER AND SPEED CONTROL MODULE
SG 14 YEL	IGNITION SWITCH START FEED	GENERAL(NEUTRAL SAFETY SWITCH, FUEL PUMP RELAY COIL,ETC)
SH 14 YEL	IGNITION SWITCH RUN/START FEED	GENERAL(IGNITION COIL RELAY NORMALLY OPEN CONTACT,ETC)

WIRE IDENTIFICATION CHART

CODE/COLOR	FROM:	TO:
SJ 12YEL(BLK)	OVERCURRENT PROTECTION (16GA FUSELINK TYPICAL)	CHASSIS BATTERY FEED
SK 12YEL(WHT)	OVERCURRENT PROTECTION (16GA FUSELINK TYPICAL)	CHASSIS BATTERY HEADLAMP SWITCH FEED #1
SL 12YEL(BLU)	OVERCURRENT PROTECTION (16GA FUSELINK TYPICAL)	CHASSIS BATTERY IGNITION SWITCH FEED #1
SM 12YEL(BLK)	OVERCURRENT PROTECTION (16GA FUSELINK TYPICAL)	RADIATOR FAN #1 CIRCUIT BREAKER FEED
SN 12YEL(BLK)	OVERCURRENT PROTECTION (16GA FUSELINK TYPICAL)	RADIATOR FAN #2 CIRCUIT BREAKER FEED
SP 14 YEL	HEADLAMP SWITCH MARKER CIRCUIT FEED	OVERCURRENT PROTECTION (15A FUSE TYPICAL)
SR 12YEL(BRN)	IGNITION SWITCH RUN ONLY FEED	OVERCURRENT PROTECTION (15A FUSE TYPICAL)
SS 12YEL(WHT)	IGNITION SWITCH ACCESSORY FEED	OVERCURRENT PROTECTION (15A FUSE TYPICAL)
ST 14 YEL	OVERCURRENT PROTECTION (15A FUSE TYPICAL)	TURNS/BACK UP CIRCUIT FEED
SU	STARTER SOLENOID BATTERY TERMINAL	ALTERNATOR BATTERY TERMINAL
SW 14 YEL	TURN SIGNAL FLASHER	TURN SIGNAL SWITCH
SX 14 YEL	REAR WINDOW WASHER SWITCH	REAR WINDOW WASHER BOTTLE PUMP
SY 14 YEL	IGNITION COIL	TACHOMETER
TA 14 YEL	OVERCURRENT PROTECTION (15A FUSE TYPICAL)	IGNITION RUN ONLY GENERAL FEED (RADIATOR FAN RELAY COIL,ETC)
TB 12 YEL	OVERCURRENT PROTECTION (25A FUSE TYPICAL)	IGNITION RUN ONLY GENERAL FEED (AUTO AC BLOWER(NOT HIGH),ETC)
TC 14 YEL	OVERCURRENT PROTECTION (15A FUSE TYPICAL)	IGNITION RUN ONLY GENERAL FEED (DOOR LOCKS,REAR WIPER,ETC.)
TD 14 YEL	OVERCURRENT PROTECTION (15A FUSE TYPICAL)	CHASSIS BATTERY GENERAL FEED
TE 16 WHT	GENERATOR	GENERATOR LOW OIL INDICATOR LAMP
TF 16 YEL	GENERATOR	GENERATOR LOW OIL INDICATOR LAMP

WIRE IDENTIFICATION CHART

CODE/COLOR	FROM:	TO:
TG 16 YEL	TELEVISION	SPEAKER RIGHT (POSITIVE)
TH 16 WHT	TELEVISION	SPEAKER RIGHT (NEGATIVE)
TJ 16 YEL	TELEVISION	SPEAKER LEFT (POSITIVE)
TK 16 WHT	TELEVISION	SPEAKER LEFT (NEGATIVE)
TL 16 YEL	FRONT RIGHT TV SPEAKER NEGATIVE,SERIES CONNECTION	FRONT LEFT TV SPEAKER POSITIVE,SERIES CONNECTION
TM 16 WHT	STEP COVER SWITCH	STEP COVER SOLENOID MOVES STEP OUT
TN 14 YEL	STARTER SOLENOID BATTERY TERMINAL	ALTERNATOR REGULATOR
TP 14 WHT	REAR AUTOMOTIVE LAMPS(TURN, MARKER,ETC)	GROUND
TR 14 YEL	VEHICLE BACK UP CIRCUIT FEED	BACK UP LAMPS
TS 14 YEL	STARTER SOLENOID (I TERMINAL)	ENGINE WIRING (IGNITION MODULE)
TT 14 YEL	NEUTRAL SAFETY SWITCH	STARTER SOLENOID (S TERMINAL)
TU 14 WHT	IGNITION COIL RELAY (COIL)	GROUND
TW 14 YEL	IGNITION SWITCH START/RUN FEED	IGNITION COIL
TX 14 YEL	IGNITION COIL RELAY (COMMON)	IGNITION COIL
TY 14 YEL	ALTERNATOR (T TERMINAL)	CHOKE HEATER
UA 14 YEL	FUEL PUMP FUSE	OIL PRESSURE CUTOUT SWITCH/ FUEL PUMP RELAY(NO),ETC
UB 14 YEL	INERTIA SWITCH (FUEL PUMP SHUTOFF)	FUEL PUMP RELAY (NORMALLY CLOSED)
UC 14 YEL	FUEL PUMP RELAY (COMMON)	FUEL PUMP
UD 16 WHT	FUEL GAUGE	FUEL SENDER

WIRE IDENTIFICATION CHART

CODE/COLOR	FROM:	TO:
UE 14 YEL	INERTIA SWITCH (FUEL PUMP SHUTOFF)	OIL PRESSURE CUTOFF SWITCH
UF 14 WHT	FUEL PUMP	GROUND
UG 14 WHT	FUEL PUMP RELAY (COIL)	GROUND
UH 16 YEL	LP DETECTOR (SHUTOFF SYSTEM,YEL)	LP SAFETY VALVE
UJ 16 YEL	LP DETECTOR (SHUTOFF SYSTEM,YEL)	LP SAFETY SWITCH
UK 16 WHT	LP DETECTOR (BLK)(REF WB)	GROUND
UL 16 WHT	EUL LAMP	EUL MODULE
UM 16 WHT	DOOR JAMB DOME LAMP SWITCH	GROUND
UN 16 WHT	SEAT BELT LAMP	EUL MODULE
UP 16 YEL	SEAT BELT LAMP	SEAT BELT BUZZER
UR 16 WHT	PARK BRAKE SWITCH	PARK BRAKE LAMP
US 16 YEL	OVERCURRENT PROTECTION (6A BREAKER TYPICAL)	COACH BATTERY FEED TO BATTERY CONDITION SWITCH
UT 14 YEL	DOOR JAMB DOME LAMP SWITCH (SWITCH POSITIVE)	DOME LAMP
UU 16 YEL	WATER HEATER	VACUUM VALVE SOLENOID
UW 16 WHT	VACUUM VALVE SOLENOID	GROUND
UX 16 YEL	LP DETECTOR #2 (SHUTOFF SYSTEM,YEL)	LP SAFETY VALVE
UY 16 YEL	LP DETECTOR #2 (SHUTOFF SYSTEM,YEL)	LP SAFETY VALVE
WA 14 YEL	EXTERIOR SERVICE LAMP SWITCH	EXTERIOR SERVICE LAMP
WB 16 YEL	OVERCURRENT PROTECTION (6A BREAKER TYPICAL)	LP DETECTOR (REF UK)

WIRE IDENTIFICATION CHART

CODE/COLOR	FROM:	TO:
WC 14 YEL	DDVRCURRENT PROTECTION (15A BREAKER TYPICAL)	COMPARTMENT LAMPS (REF WE)
WD 14 WHT	AISLE LAMPS	GROUND
WE 14 WHT	COMPARTMENT LAMPS (REF WC)	GROUND
WF 12YEL(WHT)	OVERCURRENT PROTECTION (30A BREAKER TYPICAL)	PARK BRAKE COMPRESSOR SOENOID
WG 12YEL(BLK)	OVERCURRENT PROTECTION (30A BREAKER TYPICAL)	IGNITION RELAY
WH 14 YEL	OVERCURRENT PROTECTION (15A BREAKER TYPICAL)	IGNITION SWITCH RUN ONLY FEED
WJ 12 YEL	OVERCURRENT PROTECTION (20A BREAKER TYPICAL)	IGNITION SWITCH ACCESSORY FEED RELAY
WK 14 YEL	OVERCURRENT PROTECTION (15A BREAKER TYPICAL)	IGNITION SWITCH ACCESSORY FEED
WL 14 YEL	POWER DOOR LOCK RELAY (PIN 30)	POWER DOOR LOCK MOTOR(S) (LOCK)
WM 14 WHT	POWER DOOR UNLOCK RELAY (PIN 30)	POWER DOOR LOCK MOTOR(S) (UNLOCK)
WN 16 YEL	RADIO POWER SWITCH (ACCESSORY POWER)	DASH RADIO (ACCESSORY POWER)
WP 10 YEL	OVERCURRENT PROTECTION (25A BREAKER TYPICAL)	FRONT PANEL LOADS(INVERTER, RADIO)(96 M-SERIES)
WR 14 YEL	OVERCURRENT PROTENTION (15A BREAKER TYPICAL)	POWER SEAT LIFT SWITCH
WS 14 WHT	POWER SEAT LIFT SWITCH	GROUND
WT 14 YEL	POWER SEAT LIFT SWITCH (UP)	MOTOR (POSITIVE UP)
WU 14 WHT	POWER SEAT LIFT SWITCH (DOWN)	MOTOR (POSITIVE DOWN)
WW 14 WHT	SPOT LAMP SWITCH	GROUND
WX 14 YEL	HALLWAY CEILING LAMP SWITCH	HALLWAY CEILING LAMP
WY 10 WHT	AUTOMOTIVE AIR CONDITIONER MOTOR	GROUND

WIRE IDENTIFICATION CHART

CODE/COLOR	FROM:	TO:
XA 12/10 YEL	VEHICLE AUTOMOTIVE AIR FEED CIRCUIT	AUTOMOTIVE AIR CONDITIONER BLOWER (USE 10 IF OVER 6')
XB 14 YEL	DRIVER'S DOOR POWER WINDOW SWITCH(PIN 5)	DRIVER'S DOOR POWER WINDOW MOTOR(POSITIVE UP)
XC 14 WHT	DRIVER'S DOOR POWER WINDOW SWITCH(PIN 1)	DRIVER'S DOOR POWER WINDOW MOTOR(POSITIVE DOWN)
XD 16 WHT	MONITOR PANEL	HOLDING TANK LEVEL SENSOR (FULL)
XE 16 WHT	MONITOR PANEL	HOLDING TANK LEVEL SENSOR (3/4)
XF 16 WHT	MONITOR PANEL	HOLDING TANK LEVEL SENSOR (1/2)
XG 16 WHT	MONITOR PANEL	HOLDING TANK LEVEL SENSOR (1/4)
XH 16 YEL	MONITOR PANEL	WATER TANK LEVEL SENSOR
XJ 16 YEL	MONITOR PANEL	BLACK HOLDING LEVEL SENSOR (MAIN TANK)
XK 16 YEL	MONITOR PANEL	GRAY AUXILIARY HOLDING TANK #1 LEVEL SENSOR (AUX TANK #1)
XL 16 YEL	MONITOR PANEL	GRAY AUXILIARY HOLDING TANK #2 LEVEL SENSOR (AUX TANK #2)
XM 14 YEL	OVERCURRENT PROTECTION (18GA FUSELINK TYPICAL)	IGNITION START RELAY
XN 16 YEL	FRONT ROOF AIR CONDITIONER (EXHAUST)	THERMOSTAT (EX TERMINAL)
XP 16 YEL	FRONT ROOF AIR CONDITIONER (COOL)	THERMOSTAT (Y TERMINAL)(Y EXPORT AIR)
XR 16 YEL	FRONT ROOF AIR CONDITIONER (HIGH SPEED BLOWER)	THERMOSTAT (GH TERMINAL)(H EXPORT AIR)
XS 16 YEL	FRONT ROOF AIR CONDITIONER (LOW SPEED BLOWER)	THERMOSTAT (GL TERMINAL)(G EXPORT AIR)
XT 14 YEL	IGNITION START RELAY #1 (NORMALLY CLOSED CONTACT)	IGNITION START RELAY #2 (COMMON CONTACT)
XU 14 YEL	DINETTE OVHD LAMP SWITCH	DINETTE OVHD LAMP
XW 14 WHT	IGNITION SWITCH ACCESSORY FEED RELAY CIRCUIT	GROUND

WIRE IDENTIFICATION CHART

CODE/COLOR	FROM:	TO:
XX 14 YEL	GALLEY LAMP SWITCH	GALLEY LAMP
XY 14 YEL	MAKE UP LAMP #2 SWITCH	MAKE UP LAMP #2
YA 14 YEL	TAG AXLE PRESSURE CONTROL SWITCH	COMPRESSOR SOLENOID/ SOLENOID AIR VALVE
YB 14 WHT	LOW AIR PRESSURE SWITCH	GROUND
YC 10YEL(BLU)	OVERCURRENT PROTECTION (30A BREAKER TYPICAL)	TAG AXLE COMPRESSOR SOLENOID
YD 14 WHT	TAG AXLE MOUNTING PLATE SCREW	GROUND
YE 10 WHT	TAG AXLE COMPRESSOR	GROUND
YF 12 WHT	TAG AXLE BRAKE CONTROL MODULE/BRAKE MAGNET	GROUND
YG 12YEL(BLK)	OVERCURRENT PROTECTION (20A BREAKER TYPICAL)	TAG AXLE BRAKE CONTROL MODULE
YH 12YEL(BLU)	TAG AXLE BRAKE CONTROL MODULE	TAG AXLE BRAKE MAGNET
YJ 10YEL(WHT)	TAG AXLE COMPRESSOR SOLENOID	TAG AXLE COMPRESSOR
YK 14 YEL	BEDROOM CEILING LAMP SWITCH#1 (2 SWITCH SYSTEM)	BEDROOM CEILING LAMP SWITCH #2 (2 SWITCH SYSTEM)
YL 14 YEL	BEDROOM CEILING LAMP SWITCH #1 (2 SWITCH SYSTEM)	BEDROOM CEILING LAMP SWITCH #2 (2 SWITCH SYSTEM)
YM 14 YEL	HALLWAY CEILING LAMP SWITCH #1 (2 SWITCH SYSTEM)	HALLWAY CEILING LAMP SWITCH #2 (2 SWITCH SYSTEM)
YN 14 YEL	HALLWAY CEILING LAMP SWITCH #1 (2 SWITCH SYSTEM)	HALLWAY CEILING LAMP SWITCH #2 (2 SWITCH SYSTEM)
YP 14 YEL	VALANCE LAMP SWITCH #1 (3 WAY SWITCH)	VALANCE LAMP SWITCH #2 (3 WAY SWITCH)
YR 14 YEL	VALANCE LAMP SWITCH #1 (3 WAY SWITCH)	VALANCE LAMP SWITCH #2 (3 WAY SWITCH)
YS 14 YEL	VALANCE LAMP SWITCH	VALANCE LAMP
YT 14 YEL	FRONT VALANCE LAMP SWITCH	FRONT VALANCE LAMP

WIRE IDENTIFICATION CHART

CODE/COLOR	FROM:	TO:
YU 14 YEL	REAR VALANCE LAMP SWITCH	REAR VALANCE LAMP
YW 14 WHT	DOOR BELL SWITCH	DOOR BELL
YX 14 YEL	IGNITION SWITCH RUN/START FEED	ALTERNATOR WARNING LAMP
YY 14 YEL	ALTERNATOR VOLTAGE REGULATOR	ALTERNATOR WARNING LAMP
AAA 16 WHT	STEP COVER SWITCH (REF GX)	STEP COVER SOLENOID MOVES STEP IN
AAB 14 YEL	DINETTE READING LAMPS	DINETTE READING LAMP SWITCH
AAC 14 YEL	LOUNGE READING LAMPS	LOUNGE READING LAMP SWITCH
AAD 14 YEL	FORD CHASSIS TRAILER MARKER LAMP CIRCUIT (BR/WHT)	TRAILER CONNECTOR SOCKET MARKER LAMPS
AAE 14 YEL	FORD CHASSIS TRAILER BACKUP LAMP CIRCUIT (BLK/LT GRN)	TRAILER CONNECTOR SOCKET BACKUP LAMPS
AAF 14 YEL	FORD CHASSIS TRAILER LEFT TURN/BRAKE LAMP CIRCUIT (YEL)	TRAILER CONNECTOR SOCKET LEFT TURN/BRAKE LAMP
AAG 14 YEL	FORD CHASSIS TRAILER RIGHT TURN/BRAKE LAMP CIRCUIT (DKG)	TRAILER CONNECTOR SOCKET RIGHT TURN/BRAKE LAMP
AAH 14 YEL	BATH-VENT,POWER	BATH-VENT, THERMOSTAT
AAJ 14 YEL	BATH-VENT,POWER	BATH-VENT, THERMOSTAT
AAK 16 WHT	SWITCH-WATER PUMP (MULTIPLEX SYSTEM)	LATCHING RELAY (WITH 4 OR MORE SWITCHES)
AAL 16 WHT	SWITCH-WATER PUMP (MULTIPLEX SYSTEM)	GROUND
AAM 14 YEL	CHASSIS SUPPLIED WIRE ASM (DARK BLUE)(GM)	RIGHT TAIL LAMP PARK (WIE)
AAN 14 YEL	CHASSIS SUPPLIED WIRE ASM (PURPLE) (GM)	LEFT TAIL LAMP PARK (WIE)
AAP 10 YEL	55 AMP BREAKER JUMPER WIRE	30 AMP BREAKER
AAR 14 YEL	TV/RADIO SPEAKER FEED SELECTOR SWITCH	TV SPEAKER AMPLIFIER

WIRE IDENTIFICATION CHART

CODE/COLOR	FROM:	TO:
AAS 16 YEL	SPEAKER (NEGATIVE) SPEAKERS IN SERIES	SPEAKER (POSITIVE)
AAT 16 YEL	AMPLIFIER POSITIVE OUT (AAU NEGATIVE)	FRONT WOOFER (WITH DELUXE SOUND SYSTEM)
AAU 16 WHT	AMPLIFIER NEGATIVE OUT (AAT POSITIVE)	FRONT WOOFER (WITH DELUXE SOUND SYSTEM)
AAW 16 YEL	AMPLIFIER POSITIVE OUT (AAX NEGATIVE)	REAR WOOFER (WITH DELUXE SOUND SYSTEM)
AAX 16 WHT	AMPLIFIER NEGATIVE OUT (AAW POSITIVE)	REAR WOOFER (WITH DELUXE SOUND SYSTEM)
AAY 12 YEL	SLIDEOUT ROOM CONTROL SWITCH (RAM #1)	SLIDEOUT DRIVE MOTOR LEAD #1
AAZ 12 YEL	SLIDEOUT ROOM CONTROL SWITCH (RAM #1)	SLIDEOUT DRIVE MOTOR LEAD #2
BBA 16 WHT	SLIDEOUT WIRING (PARK BRAKE SW)(SWITCHED GRD)	SLIDEOUT ROOM RELAY (GROUND TERMINAL)
BBB 16 YEL	SLIDEOUT ROOM CIRCUIT BREAKER (6 AMP)	SLIDEOUT ROOM RELAY (PIN 86 & 87)
BBC 16 YEL	LOAD SHEDDER MONITOR PANEL (RED WIRE)	LOAD SHEDDER CONTROL BOARD (RED WIRE)
BBD 16 YEL	LOAD SHEDDER MONITOR PANEL (BLUE WIRE)	LOAD SHEDDER CONTROL BOARD (BLUE WIRE)
BBE 16 YEL	LOAD SHEDDER MONITOR PANEL (BLACK WIRE)	LOAD SHEDDER CONTROL BOARD (BLACK WIRE)
BBF 16 YEL	LOAD SHEDDER MONITOR PANEL (GRAY WIRE)	LOAD SHEDDER CONTROL BOARD (GRAY WIRE)
BBG 14 YEL	DINETTE CEILING LAMP SWITCH	DINETTE CEILING LAMP
BBH 16 YEL	REAR COMPRESSOR SIGNAL REAR THERMOSTAT	LOAD SHEDDER CONTROL BOARD
BBJ 16 YEL	LOAD SHEDDER CONTROL BOARD	REAR A/C (COOL)
BBK 12 WHT	JET AIR/TAG AXLE WIRING	GROUND, CHASSIS
BBL 14 YEL	OVHD SWITCH	OVHD HALOGEN LAMPS
BBM 16 YEL	SLIDEOUT ROOM SWITCH (ROOM TWO EXTEND)	HWH WIRING (ROOM TWO EXTEND)

WIRE IDENTIFICATION CHART

CODE/COLOR	FROM:	TO:
BBN 16 YEL	SLIDEOUT ROOM SWITCH (ROOM TWO RETRACT)	HWH WIRING (ROOM TWO RETRACT)
BBP 14 YEL	ICC COURTESY BLINK SWITCH	ICC COURTESY BLINK RELAY
BBR 14 YEL	ICC COURTESY BLINK RELAY	CLEARANCE LAMPS
BBS 14 YEL	CHASSIS FUSE PANEL	ICC COURTESY BLINK RELAY
BBT 14 YEL	DOCKING LAMP SWITCH TRIGGER RELAY	DOCKING LAMP SWITCH
BBU 12 YEL	DOCKING LAMP CIRCUIT BREAKER	DOCKING LAMP RELAY
BBW 14 YEL	VEHICLE LEFT HEADLAMP LOW BEAM CIRCUIT	LEFT LOW BEAM LAMP
BBX 14 YEL	VEHICLE RIGHT HEADLAMP LOW BEAM CIRCUIT	RIGHT LOW BEAM LAMP
BBY 14 YEL	SWITCH-MONITOR PANEL (IN EXT. WATER CENTER)	EXTERIOR MONITOR PANEL (IN EXT. WATER CENTER)
BBZ 14 YEL	OVERCURRENT PROTECTION (15A FUSE/BREAKER TYPICAL)	AUXILIARY FURNACE (CCA)
CCA 14 WHT	AUXILIARY FURNACE	GROUND
CCB 16 YEL	EXTERIOR MONITOR PANEL	WATER TANK LEVEL SENSOR
CCC 16 YEL	EXTERIOR MONITOR PANEL	MAIN HOLDING TANK LEVEL SENSOR
CCD 16 YEL	EXTERIOR MONITOR PANEL	AUX HOLDING TANK LEVEL SENSOR
CCE 14 YEL	COMPARTMENT LAMP SWITCH	COMPARTMENT LAMP
CCF 14 YEL	COMPARTMENT LAMP SWITCH	COMPARTMENT LAMP
CCG 14 YEL	COMPARTMENT LAMP SWITCH	COMPARTMENT LAMP
CCH 14 YEL	COMPARTMENT LAMP SWITCH	COMPARTMENT LAMP
CCJ 14 YEL	COMPARTMENT LAMP SWITCH	COMPARTMENT LAMP

WIRE IDENTIFICATION CHART

CODE/COLOR	FROM:	TO:
CCK 14 YEL	COMPARTMENT LAMP SWITCH	COMPARTMENT LAMP
CCL 14 YEL	COMPARTMENT LAMP SWITCH	COMPARTMENT LAMP
CCM 14 YEL	COMPARTMENT LAMP SWITCH	COMPARTMENT LAMP
CCN 16 YEL	THERMOSTATE LOW SPEED FAN SIGNAL	CENTRAL AIR AND LOAD SHEDDER
CCP 16 YEL	LOAD SHEDDER COMPRESSOR TWO CONTROL RELAY	CENTRAL A/C COMPRESSOR TWO
CCR 14 YEL	SWITCH-MONITOR PANEL (IN EXT. WATER CENTER)	EXTERIOR MONITOR PANEL (IN EXT. WATER CENTER)
CCS 16 YEL	NOISE FILTER	RADIO POWER INPUT
CCT 16 YEL	REAR RIGHT TV SPEAKER NEGATIVE,SERIES CONNECTION	REAR LEFT TV SPEAKER POSITIVE,SERIES CONNECTION
CCU 16 YEL	GM DOME LAMP POWER	DOME LAMP
CCW 12 YEL	DUAL MODE SOLENOID (CHASSIS SIDE)	FUSE HOLDER (30 AMP)
CCX 16 YEL	ORG WIRE ON AIR COMPRESSOR	AIR PRESSURE SWITCH ON AIR TANK
CCY 16 YEL	HWH WIRING (BATTERY POWER)	SLIDEOUT ROOM SWITCH (POSITIVE)
CCZ 16 YEL	HWH WIRING (SWITCHED BATTERY POWER)	SLIDEOUT ROOM #1 SWITCH (POSITIVE)
DDA 16 YEL	HWH WIRING (PUMP RELAY CONTROL)	SLIDEOUT ROOM SWITCH (POSITIVE)
DDB 14 YEL	REAR AUTO HEATER CIRCUIT BREAKER	REAR AUTO HEATER RELAY (POWER)
DDC 14 YEL	REAR AUTO HEATER RELAY (SWITCHED POWER)	REAR AUTO HEATER SWITCH (COMMON TERMINAL)
DDD 14 YEL	MODULE-CHARGE CONTROL RELAY OUTPUT	AUX-START SOLENOID RELAY
DDE 14 YEL	AUX-START SOLENOID RELAY	AUX-START SOLENOID
DDF 10 YEL	HEATER BLOWER CIRCUIT BREAKER	HEATER BLOWER RELAY

WIRE IDENTIFICATION CHART

CODE/COLOR	FROM:	TO:
DDG 10 YEL	CIRCUIT BREAKER BUSS BAR	CHASSIS BATTERY FEED CIRCUIT BREAKER
DDH 14 YEL	FREIGHTLINER RUN ONLY TRIGGER CIRCUIT	HEATER BLOWER RELAY
DDJ 16 WHT	CHASSIS PARKING BRAKE TRIGGER CIRCUIT	LEVELING SYSTEM PARKING BRAKE SENSOR WIRE
DDK 16 YEL	HWH WIRING (PUMP RELAY CONTROL)	REAR SLIDEOUT ROOM SWITCH (POSITIVE)
DDL 14 WHT	FRONT LEFT AUTOMOTIVE LAMPS	GROUND
DDM 14 WHT	FRONT RIGHT AUTOMOTIVE LAMPS	GROUND
DDN 16 YEL	TIMER MODULE	CHECK ANTENNA LIGHT
DDP 12 YEL	OVERCURRENT PROTECTION (20A BREAKER TYPICAL)	INVERTER FEED (INVERTER NUMBER 2)
DDR 12 WHT	INVERTER (INVERTER NUMBER 2)	GROUND
DDS 12 WHT	INVERTER CHASSIS (INVERTER NUMBER 2)	GROUND
DDT 12 YEL	POWER COMPT DOOR LOCK RELAY (RIGHT SIDE)	POWER COMPT DOOR LOCK MOTOR(S) (RIGHT SIDE)
DDU 12 WHT	POWER COMPT DOOR UNLOCK RELAY (RIGHT SIDE)	POWER COMPT LOCK MOTOR(S) (UNLOCK) (RIGHT SIDE)
DDV 12 YEL	POWER COMPT DOOR LOCK RELAY (LEFT SIDE)	POWER COMPT LOCK MOTOR(S) (LOCK) (LEFT SIDE)
DDW 12 WHT	POWER COMPT DOOR UNLOCK RELAY (LEFT SIDE)	POWER COMPT LOCK MOTOR(S) (UNLOCK) (LEFT SIDE)
DDX 12 YEL	OVERCURRENT PROTECTION (20A BREAKER TYPICAL)	POWER COMPT DOOR LOCK/ UNLOCK RELAY (RIGHT SIDE)
DDY 12 YEL	OVERCURRENT PROTECTION (20A BREAKER TYPICAL)	POWER COMPT DOOR LOCK/ UNLOCK RELAY (LEFT SIDE)
DDZ 12 YEL	POWER COMPT DOOR LOCK SWITCH (LOCK) (PIN 1)	POWER COMPT DOOR LOCK RELAY (PIN 86)
EEA 12 WHT	POWER COMPT DOOR LOCK SWITCH (UNLOCK) (PIN 5)	POWER COMPT DOOR UNLOCK RELAY (PIN 86)
EEB 12 WHT	POWER COMPT DOOR LOCK RELAYS (LEFT SIDE)	GROUND

WIRE IDENTIFICATION CHART

CODE/COLOR	FROM:	TO:
EEC 12 YEL	25 AMP BREAKER IN 12 VOLT PANEL	SOFA RECLINER SWITCH SOFA 4-WAY RECLINER
EED 12 WHT	SOFA RECLINER SWITCH SOFA 4-WAY RECLINER	GROUND
EEE 14 YEL	OVERCURRENT PROTECTION (15A BREAKER TYPICAL)	12V POWER JACK
EEF 14 WHT	12V POWER JACK	GROUND
EEG 12 WHT	POWER COMPT DOOR LOCK RELAYS (RIGHT SIDE)	GROUND
EEH 12 YEL	SOFA RECLINER SWITCH EXTEND	SOFA RECLINER MOTOR SOFA 4-WAY
EEJ 12 YEL	SOFA RECLINER SWITCH RETRACT	SOFA RECLINER MOTOR SOFA 4-WAY
EEK 18 YEL	AUDIO AMPLIFIER	LH FRT SPKR (+)
EEL 18 WHT	AUDIO AMPLIFIER	LH FRT SPKR (-)
EEM 18 YEL	AUDIO AMPLIFIER	RH FRT SPKR (+)
EEN 18 WHT	AUDIO AMPLIFIER	RH FRT SPKR (-)
EEP 18 YEL	AUDIO AMPLIFIER	LH RR SPKR (+)
EER 18 WHT	AUDIO AMPLIFIER	LH RR SPKR (-)
EES 18 YEL	AUDIO AMPLIFIER	RH RR SPKR (+)
EET 18 WHT	AUDIO AMPLIFIER	RH RR SPKR (-)
EEU 18 YEL	AUDIO AMPLIFIER	CTR CHANNEL SPKR (+)
EEW 18 WHT	AUDIO AMPLIFIER	CTR CHANNEL SPKR (-)
EEX 12/10 YEL	PASSENGER AUTO A/C FEED CIRCUIT	PASSENGER AUTO A/C BLOWER (USE 10 IF OVER 6')
EEY 10 WHT	PASSENGER AUTO A/C MOTOR	GROUND

WIRE IDENTIFICATION CHART

CODE/COLOR	FROM:	TO:
EEZ 12/10 YEL	OVERCURRENT PROTECTION (30A BREAKER TYPICAL)	PASSENGER HI-SPEED HEATER FAN (USER 10 IF OVER 6')
FFA 10 YEL	PASSENGER HEATER BLOWER CIRCUIT BREAKER	PASSENGER HEATER BLOWER RELAY
FFB 10 YEL	OVERCURRENT PORTECTION (30A BREAKER TYPICAL)	POWER LOUNGE CHAIR
FFC 10 WHT	POWER LOUNGE CHAIR	GROUND
FFD 12 YEL	OVERCURRENT PROTECTION (30A BREAKER TYPICAL)	AWNING CONTROL BOX (12V POSITIVE)
FFE 12 WHT	AWNING CONTROL BOX	GROUND
FFF 12 YEL	AWNING CONTROL BOX	DOOR AWNING (MOTOR POSITIVE)
FFG 12 WHT	DOOR AWNING (MOTOR GROUND)	AWNING CONTROL BOX
FFH 12 YEL	AWNING CONTROL BOX	PATIO AWNING (MOTOR POSITIVE)
FFJ 12 WHT	PATIO AWNING (MOTOR GROUND)	AWNING CONTROL BOX
FFK 16 YEL	AWNING CONTROL BOX	DOOR AWNING SWITCH (EXTEND)
FFL 16 YEL	DOOR AWNING SWITCH (COMMON)	AWNING CONTROL BOX
FFM 16 YEL	AWNING CONTROL BOX	DOOR AWNING SWITCH (RETRACT)
FFN 16 YEL	AWNING CONTROL BOX	PATIO AWNING SWITCH (EXTEND)
FFP 16 YEL	PATIO AWNING SWITCH (COMMON)	AWNING CONTOL BOX
FFR 16 YEL	AWNING CONTOL BOX	PATIO AWNING SWITCH (RETRACT)
FFS 14 WHT	RELAY (PIN 30)	AWNING CONTROL BOX
FFT 14 WHT	PATIO AWNING SWITCH	AWNING CONTROL BOX
FFU 16 YEL	AWNING SELECTOR SWITCH (DOOR AWNING)	AWNING CONTROL SWITCH (DOOR AWNING)

WIRE IDENTIFICATION CHART

CODE/COLOR	FROM:	TO:
FFV 16 YEL	AWNING SELECTOR SWITCH (PATIO AWNING)	AWNING CONTROL SWITCH (PATIO AWNING)
FFW 14 YEL	LOUNGE LAMPS SWITCH #1	LOUNGE LAMPS SWITCH #2
FFX 14 YEL	LOUNGE LAMPS SWITCH #1	LOUNGE LAMPS SWITCH #2
FFY 14 YEL	CEILING FAN SWITCH	CEILING FAN
FFZ 14 YEL	OVERCURRENT PROTECTION (15A FUSE/BREAKER TYPICAL)	COACH LIGHTING,ETC CIRCUIT #7 (REF GGA)
GGA 14 WHT	COACH LIGHTING (REF-FFZ)	GROUND
GGB 14 YEL	POWER LIFT VENT	POWER LIFT SWITCH (UP)
GGC 14 YEL	POWER LIFT VENT	POWER LIFT SWITCH (DOWN)
GGD 16 YEL	CONTROL MODULE (LEFT FRONT SLIDE)(STOP)	SLIDEOUT SWITCH (LEFT FRONT SLIDE)
GGE 16 YEL	CONTROL MODULE (LEFT FRONT SLIDE)(GREEN LED)	SLIDEOUT SWITCH (LEFT FRONT SLIDE)
GGF 16 YEL	CONTROL MODULE (LEFT FRONT SLIDE)(RED LED)	SLIDEOUT SWITCH (LEFT FRONT SLIDE)
GGG 16 YEL	CONTROL MODULE (LEFT FRONT SLIDE)(SIGNAL)	LEFT FRONT SLIDE,FRONT RAM (ENCODER)
GGH 16 YEL	CONTROL MODULE (LEFT FRONT SLIDE)(+)	LEFT FRONT SLIDE,FRONT RAM (ENCODER)
GGJ 16 WHT	CONTROL MODULE (LEFT FRONT SLIDE)(-)	LEFT FRONT SLIDE,FRONT RAM (ENCODER)
GGK 16 YEL	CONTROL MODULE (LEFT FRONT SLIDE)(SIGNAL)	LEFT FRONT SLIDE,REAR RAM (ENCODER)
GGL 16 YEL	CONTROL MODULE (LEFT FRONT SLIDE)(+)	LEFT FRONT SLIDE,REAR RAM (ENCODER)
GGM 16 WHT	CONTROL MODULE (LEFT FRONT SLIDE)(-)	LEFT FRONT SLIDE,REAR RAM (ENCODER)
GGN 12 YEL	CONTROL MODULE (RAM #2)	SLIDEOUT ACTUATOR DRIVE LEAD #1
GGP 12 YEL	CONTROL MODULE (RAM #2)	SLIDEOUT ACTUATOR DRIVE LEAD #2

WIRE IDENTIFICATION CHART

CODE/COLOR	FROM:	TO:
GGR 16 YEL	FRONT ROOF HEAT PUMP	THERMOSTAT (W TERMINAL)
GGS 16 YEL	REAR ROOF HEAT PUMP	THERMOSTAT (W TERMINAL)
GGT 12 YEL	SOFA RECLINER SWITCH EXTEND	SOFA RECLINER MOTOR SOFA 4-WAY
GGU 12 YEL	SOFA RECLINER SWITCH RETRACT	SOFA RECLINER MOTOR SOFA 4-WAY
GGV 14 WHT	GPS (BLACK WIRE)	GROUND
GGW 16 YEL	GPS (GREEN/WHITE WIRE)	VEHICLE SPEED SENSOR (CHASSIS SUPPLIED)
GGX 14 YEL	10 OHM RESISTOR *	BEDROOM CEILING FAN (LOW SPEED)
GGY 14 YEL	BATHROOM VENT SWITCH	BATHROOM VENT
GGZ 14 YEL	BEDROOM VENT SWITCH	BEDROOM VENT
HHA 14 YEL	OVERCURRENT PROTECTION (15A FUSE/BREAKER TYPICAL)	COACH VENTS/LAMPS (REF HHB)
HHB 14 WHT	COACH VENTS/LAMPS (REF HHA)	GROUND
HHC 12 YEL	STEP COVER SWITCH	STEP COVER MOTOR (+)RETRACT,(-)EXTEND
HHD 12 YEL	STEP COVER SWITCH	STEP COVER MOTOR (-)EXTEND,(+)RETRACT
HHE 16 YEL	SLIDEOUT ROOM SWITCH (ROOM THREE EXTEND)	HWH WIRING (ROOM THREE EXTEND)
HHF 16 YEL	SLIDEOUT ROOM SWITCH (ROOM THREE RETRACT)	HWH WIRING (ROOM THREE RETRACT)
HHG 16 YEL	SLIDEOUT ROOM SWITCH (ROOM FOUR EXTEND)	HWH WIRING (ROOM FOUR EXTEND)
HHH 16 YEL	SLIDEOUT ROOM SWITCH (ROOM FOUR RETRACT)	SLIDEOUT ROOM SWITCH (ROOM FOUR RETRACT)
HHJ 14 YEL	110V WATER HEATER TRIGGER SWITCH	WATER HEATER RELAY
HHK 14 YEL	DRIVER'S POWER SUNVISOR SWITCH	DRIVER'S POWER SUNVISOR

WIRE IDENTIFICATION CHART

CODE/COLOR	FROM:	TO:
HHL 14 YEL	DRIVER'S POWER SUNVISOR SWITCH	DRIVER'S POWER SUNVISOR
HHM 14 YEL	PASS POWER SUNVISOR SWITCH	PASS POWER SUNVISOR
HHN 14 YEL	PASS POWER SUNVISOR SWITCH	PASS POWER SUNVISOR
HHP 14 YEL	HOT WATER HEAT CONTROL BOARD (F1)	ZONE 1 FAN SPEED SWITCH
HHR 14 YEL	ZONE 1 FAN SPEED SWITCH	ZONE 1 HEATER FAN
HHS 16 YEL	HOT WATER HEAT CONTROL BOARD (TC)	ZONE 2 & 3 THERMOSTAT
HHT 16 YEL	HOT WATER HEAT CONTROL BOARD (T2)	ZONE 2 THERMOSTAT
HHU 14 YEL	HOT WATER HEAT CONTROL BOARD (F2)	ZONE 2 FAN SPEED SWITCH
HHV 14 YEL	ZONE 2 FAN SPEED SWITCH	ZONE 2 HEATER FAN
HHW 16 YEL	HOT WATER HEAT CONTROL BOARD (T3)	ZONE 3 THERMOSTAT
HHX 14 YEL	HOT WATER HEAT CONTROL BOARD (F3)	ZONE 3 HEATER FAN
HHY 16 WHT	AWNING CONTROL BOX	WIND SENSOR (NEGATIVE)
HHZ 16 YEL	AWNING CONTROL BOX	WIND SENSOR (POSITIVE)
JJA 16 YEL	AWNING CONTROL BOX	WIND SENSOR TEMPERATURE OUTPUT
JJB 16 YEL	AWNING CONTROL BOX	WIND SENSOR SPEED OUTPUT
JJC 14 YEL	ENGINE HEATER CIRCULATING PUMP SWITCH	HOT WATER HEAT CONTROL PANEL (BLU/BLK WIRE)
JJD 10 YEL	OVERCURRENT PROTECTION (25 FUSE TYPICAL)	HOT WATER HEAT CONTROL BOARD
JJE 10 WHT	HOT WATER HEAT CONTROL BOARD	GROUND
JJF 14 YEL	SATELLITE POWER SWITCH	SATELLITE-AUTO SEEK

WIRE IDENTIFICATION CHART

CODE/COLOR	FROM:	TO:
JJG 12 YEL	OVERCURRENT PROTECTION (20 AMP BREAKER TYPICAL)	SLIDEOUT ROOM CONTROL SWITCH (RAM #3)
JJH 12 WHT	SLIDEOUT ROOM CONTROL SWITCH (RAM #3)	GROUND
JJJ 12 YEL	SLIDEOUT ROOM CONTROL SWITCH (RAM #3)	SLIDEOUT DRIVE MOTOR LEAD #1
JJK 12 YEL	SLIDEOUT ROOM CONTROL SWITCH (RAM #3)	SLIDEOUT DRIVE MOTOR LEAD #2
JJL 12 YEL	OVERCURRENT PROTECTION (20 AMP BREAKER TYPICAL)	SLIDEOUT ROOM CONTROL SWITCH (RAM #2)
JJM 16 YEL	HWH WIRING (SWITCHED BATTERY POWER)	SLIDEOUT ROOM SWITCH #2 (SWITCHED EXTEND/RETRACT PWR)
JJN 16 YEL	HWH WIRING (SWITCHED BATTERY POWER)	SLIDEOUT ROOM SWITCH #3 (SWITCHED EXTEND/RETRACT PWR)
JJP 16 YEL	HWH WIRING (SWITCHED BATTERY POWER)	SLIDEOUT ROOM SWITCH #4 (SWITCHED EXTEND/RETRACT PWR)
JJR 16 YEL	REMOTE SWITCH (EXTEND)	PATIO AWNING CONTROL MODULE (RELAY POSITION 87A,EXTEND)
JJS 12 YEL	REMOTE SWITCH	DOOR AWNING CONTROL RELAY (RELAY POSITION 87A,EXTEND)
JJT 14 YEL	OVERCURRENT PROTECTION (15A FUSE/BREAKER TYPICAL)	COACH 12V RECEPTACLES (REF JJU)
JJU 14 WHT	COACH 12V RECEPTACLES (REF JJT)	GROUND
JJV 14 YEL	MONITOR PANEL LAMP SWITCH	MONITOR PANEL LAMP
JJW 14 YEL	RUN ONLY POWER BREAKER	RUN ONLY POWER RELAY
JJX 14 YEL	RUN ONLY POWER RELAY	GENERAL PURPOSE (RUN ONLY FEED)
JJY 14 YEL	RUN/ACC POWER #1 BREAKER	RUN/ACC POWER #1 RELAY
JJZ 14 YEL	RUN/ACC POWER #1 RELAY (REF LLD)	GENERAL PURPOSE (RUN/ACC FEED #1)
KKA 14 YEL	RUN/ACC POWER #2 BREAKER	RUN/ACC POWER #2 RELAY
KKB 14 YEL	RUN/ACC POWER #2 RELAY (REF LLE)	GENERAL PURPOSE (RUN/ACC FEED #2)

WIRE IDENTIFICATION CHART

CODE/COLOR	FROM:	TO:
KKC 12 YEL	POWER SEAT RELAY	POWER SEAT (HEATER)
KKD 16 YEL	CONFIRMATION EMERGENCY SHUT OFF SWITCH (IN COACH)	EMERGENCY SHUT OFF SWITCH (ON REMOTE FILL BRACKET)
KKE 16 YEL	EMERGENCY SHUT OFF SWITCH (ON REMOTE FILL BRACKET)	EMERGENCY SHUT OFF SOLENOID (ON LP TANK)
KKF 6 BLK	BATTERY DISCONNECT RELAY	COACH BUSS BAR
KKG 8 BLK	BATTERY MODE SOLENOID	CHASSIS BUSS BAR
KKH 14 YEL	EXTERIOR SERVICE LAMP SWITCH #1	EXTERIOR SERVICE LAMP SWITCH #2
KKJ 14 YEL	EXTERIOR SERVICE LAMP SWITCH #1	EXTERIOR SERVICE LAMP SWITCH #2
KKK 16 YEL	HWH WIRING (SWITCHED BATTERY POWER)	SLIDEOUT ROOM #2 SWITCH (POSITIVE)
KKL 16 YEL	HWH WIRING (SWITCHED BATTERY POWER)	SLIDEOUT ROOM #3 SWITCH (POSITIVE)
KKM 16 YEL	HWH WIRING (SWITCHED BATTERY POWER)	SLIDEOUT ROOM #4 SWITCH (POSITIVE)
KKN 14 YEL	KEYLESS ENTRY PORCH LIGHT OUTPUT	PORCH/STEP/MAP LAMP
KKP 14 YEL	LOUNGE CEILING ROPE LAMP SWITCH (CIRCUIT #1)	LOUNGE CEILING ROPE LAMP (REF CIRCUIT SSZ)
KKR 14 YEL	BEDROOM CEILING ROPE LAMP SWITCH	BEDROOM CEILING ROPE LAMP
KKS 14 YEL	BEDROOM VALANCE LAMP SWITCH	BEDROOM VALANCE LAMP
KKT 14 YEL	BEDROOM "MOOD" LAMP SWITCH	BEDROOM "MOOD" LAMP
KKU 16 YEL	REAR TV SPEAKER OUTPUT (RIGHT POSITIVE)	RIGHT SPEAKER (POSITIVE)
KKV 16 WHT	REAR TV SPEAKER OUTPUT (RIGHT NEGATIVE)	RIGHT SPEAKER (NEGATIVE)
KKW 16 YEL	REAR TV SPEAKER OUTPUT (LEFT POSITIVE)	LEFT SPEAKER (POSITIVE)
KKX 16 WHT	REAR TV SPEAKER OUTPUT (LEFT NEGATIVE)	LEFT SPEAKER (NEGATIVE)

WIRE IDENTIFICATION CHART

CODE/COLOR	FROM:	TO:
KKY 14 YEL	OVERCURRENT PROTECTION (15A FUSE/BREAKER TYPICAL)	COACH LIGHTING,ETC CIRCUIT #8 (REF KKZ)
KKZ 14 WHT	COACH LIGHTING (REF KKY)	GROUND
LLA 14 YEL	OVERCURRENT PROTECTION (15A FUSE/BREAKER TYPICAL)	COACH LIGHTING,ETC CIRCUIT #9 (REF LLB)
LLB 14 WHT	COACH LIGHTING (REF LLA)	GROUND
LLC 14 YEL	SEAT HEATER BREAKER (15 AMP BREAKER TYPICAL)	SEAT HEATER RELAY POSITION 30
LLD 14 WHT	RUN/ACC FEED #1 (REF JJZ)	GROUND
LLE 14 WHT	RUN/ACC FEED #2 (REF KKB)	GROUND
LLF 14 YEL	DOME LAMP RELAY	DOME LAMP
LLG 10/12 YEL	TRAILER BRAKE SIGNAL (OUTPUT FROM CONTROLLER)	TRAILER CONNECTOR (ELECTRIC BRAKES)
LLH 14 WHT	RUN ONLY GROUND SOURCE (CHASSIS SUPPLIED)	AUX START RELAY
LLJ 14 YEL	AUX START RELAY (RUN ONLY POWER)	AUX START SWITCH
LLK 10 YEL	CHASSIS BREAKER PANEL (LH FRT SLIDE)(FRT RAM)	CONTROL MODULE (LH FRT SLIDE)
LLL 10 WHT	CHASSIS GROUND BAR (LH FRT SLIDE)(FRT RAM)	CONTROL MODULE (LH FRT SLIDE)
LLM 10 YEL	CHASSIS BREAKER PANEL (LH FRT SLIDE)(REAR RAM)	CONTROL MODULE (LH FRT SLIDE)
LLN 10 WHT	CHASSIS GROUND BAR (LH FRT SLIDE)(REAR RAM)	CONTROL MODULE (LH FRT SLIDE)
LLP 10 YEL	CHASSIS BREAKER PANEL (REAR SLIDE RAM)	CONTROL MODULE (REAR SLIDE)
LLR 10 WHT	CHASSIS GROUND BAR (REAR SLIDE RAM)	CONTROL MODULE (REAR SLIDE)
LLS 10 YEL	CONTROL MODULE (LEFT FRONT SLIDE)	LT FRT SLIDE FRT RAM (MOTOR DRIVE LINE)
LLT 10 YEL	CONTROL MODULE (LEFT FRONT SLIDE)	LT FRT SLIDE FRT RAM (MOTOR DRIVE LINE)

WIRE IDENTIFICATION CHART

CODE/COLOR	FROM:	TO:
LLU 10 YEL	CONTROL MODULE (LEFT FRONT SLIDE)	LT FRT SLIDE RR RAM (MOTOR DRIVE LINE)
LLV 10 YEL	CONTROL MODULE (REAR SLIDE)	REAR SLIDEOUT RAM (MOTOR DRIVE LINE)
LLW 10 YEL	CONTROL MODULE (LEFT FRONT SLIDE)	LT FRT SLIDE RR RAM (MOTOR DRIVE LINE)
LLX 10 YEL	CONTROL MODULE (REAR SLIDE)	REAR SLIDEOUT RAM (MOTOR DRIVE LINE)
LLY 16 WHT	CONTROL MODULE (REAR SLIDE)(GROUND)	SLIDEOUT SWITCH (REAR SLIDEOUT)
LLZ 16 YEL	CONTROL MODULE (REAR SLIDE)(RETRACT)	SLIDEOUT SWITCH (REAR SLIDEOUT)
MMA 16 YEL	CONTROL MODULE (REAR SLIDE)(STOP)	SLIDEOUT SWITCH (REAR SLIDEOUT)
MMB 16 YEL	CONTROL MODULE (REAR SLIDE)(GREEN LED)	SLIDEOUT SWITCH (REAR SLIDEOUT)
MMC 16 YEL	CONTROL MODULE (REAR SLIDE)(EXTEND)	SLIDEOUT SWITCH (REAR SLIDEOUT)
MMD 16 YEL	CONTROL MODULE (REAR SLIDE)(RED LED)	SLIDEOUT SWITCH (REAR SLIDEOUT)
MME 10 YEL	CHASSIS SIDE OF SOLENOID (FRT LT/REAR SLIDE RAMS)	BREAKER PANEL BUSS BAR (FRT LT/REAR SLIDE RAMS)
MMF 10 YEL	CHASSIS SIDE OF SOLENOID (FRT RT SLIDE RAMS)	BREAKER PANEL BUSS BAR (FRT RT SLIDE RAMS)
MMG 10 YEL	CHASSIS SIDE OF SOLENOID (REAR SLIDE RAM)	BREAKER PANEL (REAR SLIDE RAM)
MMH 16 YEL	OVERCURRENT PROTECTION (6 AMP BREAKER TYPICAL)	POWER SUNVISOR SWITCH
MMJ 16 WHT	GROUND	POWER SUNVISOR SWITCH
MMK 16 YEL	BEDROOM STEREO (LEFT SPEAKER REF)	CROSS OVER BOX (POSITIVE)
MML 16 WHT	BEDROOM STEREO (LEFT SPEAKER REF)	CROSS OVER BOX (NEGATIVE)
MMM 16 YEL	BEDROOM STEREO (RIGHT SPEAKER REF)	CROSS OVER BOX (POSITIVE
MMN 16 WHT	BEDROOM STEREO (RT/WOOFER SPKER REF)	CROSS OVER BOX (NEGATIVE)

WIRE IDENTIFICATION CHART

CODE/COLOR	FROM:	TO:
MMP 16 YEL	CROSS OVER COIL (POSITIVE)	SUBWOOFER (BEDROOM)
MMR 14 YEL	CHASSIS TOW MARKER LAMPS CIRCUIT	TRAILER CONNECTOR (TAIL/MARKER LAMPS)
MMS 12 YEL	+12V	PASSENGER AC/HEATER CONTROLS
MMT 12 YEL	PASSENGER FAN SWITCH (LOW SPEED)	PASSENGER FAN
MMU 12 YEL	PASSENGER FAN SWITCH (MED SPEED)	PASSENGER FAN
MMV 12 YEL	PASSENGER FAN SWITCH (HIGH SPEED)	PASSENGER FAN
MMW 16 YEL	+12V	PASSENGER CONTROL PANEL LAMPS
MMX 16 WHT	PASSENGER CONTROL PANEL LAMPS	GROUND
MMY 16 WHT	PASSENGER TEMP AND VENT CONTROL	GROUND
MMZ 12 YEL	SLIDEOUT ROOM CONTROL SWITCH (RAM #1)	SLIDEOUT DRIVE MOTOR LEAD #1
NNA 12 YEL	SLIDEOUT ROOM CONTROL SWITCH (RAM #1)	SLIDEOUT DRIVE MOTOR LEAD #2
NNB 16 YEL	CONTROL MODULE (FRONT SLIDE) (SIGNAL)	FRONT SLIDE FRONT RAM (ENCODER)
NNC 16 YEL	CONTROL MODULE (FRONT SLIDE) (+)	FRONT SLIDE FRONT RAM (ENCODER)
NND 16 WHT	CONTROL MODULE (FRONT SLIDE) (-)	FRONT SLIDE FRONT RAM (ENCODER)
NNE 16 YEL	CONTROL MODULE (FRONT SLIDE) (SIGNAL)	FRONT SLIDE REAR RAM (ENCODER)
NNF 16 YEL	CONTROL MODULE (FRONT SLIDE) (+)	FRONT SLIDE REAR RAM (ENCODER)
NNG 16 WHT	CONTROL MODULE (FRONT SLIDE) (-)	FRONT SLIDE REAR RAM (ENCODER)
NNH 12 YEL	CONTROL MODULE (RAM #2)	SLIDEOUT ACTURATOR DRIVE LEAD #1
NNJ 12 YEL	CONTROL MODULE (RAM #2)	SLIDEOUT ACTURATOR DRIVE LEAD #2

WIRE IDENTIFICATION CHART

CODE/COLOR	FROM:	TO:
NNK 16 YEL	KEYLESS ENTRY TOUCH PAD SIGNAL	ENTRANCE DOOR TOUCH PAD
NNL 16 YEL	PASSENGER TEMP CONTROL (CONTROL OUT)	PASSENGER AC/HEATER
NNM 16 YEL	PASSENGER VENT CONTROL (CONTROL OUT)	PASSENGER VENT
NNN 16 YEL	CONTROL MODULE (RIGHT FRONT SLIDE)(STOP)	SLIDEOUT SWITCH (RIGHT FRONT SLIDE)
NNP 16 YEL	CONTROL MODULE (RIGHT FRONT SLIDE)(GREEN LED)	SLIDEOUT SWITCH (RIGHT FRONT SLIDE)
NNR 16 YEL	CONTROL MODULE (RIGHT FRONT SLIDE)(RED LED)	SLIDEOUT SWITCH (RIGHT FRONT SLIDE)
NNS 16 WHT	CONTROL MODULE (RIGHT FRONT SLIDE)(GROUND)	SLIDEOUT SWITCH (RIGHT FRONT SLIDEOUT)
NNT 16 YEL	CONTROL MODULE (RIGHT FRONT SLIDE)(SIGNAL)	RIGHT FRONT SLIDE,FRONT RAM (ENCODER)
NNU 16 YEL	CONTROL MODULE (RIGHT FRONT SLIDE)(+)	RIGHT FRONT SLIDE,FRONT RAM (ENCODER)
NNV 16 WHT	CONTROL MODULE (RIGHT FRONT SLIDE)(-)	RIGHT FRONT SLIDE,FRONT RAM (ENCODER)
NNW 16 YEL	CONTROL MODULE (RIGHT FRONT SLIDE)(SIGNAL)	RIGHT FRONT SLIDE,REAR RAM (ENCODER)
NNX 16 YEL	CONTROL MODULE (RIGHT FRONT SLIDE)(+)	RIGHT FRONT SLIDE,REAR RAM (ENCODER)
NNY 16 WHT	CONTROL MODULE (RIGHT FRONT SLIDE)(-)	RIGHT FRONT SLIDE,REAR RAM (ENCODER)
NNZ 10 YEL	CHASSIS BREAKER PANEL (RH FRT SLIDE)(FRT RAM)	CONTROL MODULE (RIGHT FRONT SLIDE)
PPA 10 WHT	CHASSIS GROUND BAR (RH FRT SLIDE)(FRT RAM)	CONTROL MODULE (RIGHT FRONT SLIDE)
PPB 10 YEL	CHASSIS BREAKER PANEL (RH FRT SLIDE)(REAR RAM)	CONTROL MODULE (RIGHT FRONT SLIDE)
PPC 10 WHT	CHASSIS GROUND BAR (RH FRT SLIDE)(REAR RAM)	CONTROL MODULE (RIGHT FRONT SLIDE)
PPD 10 YEL	CONTROL MODULE (RIGHT FRONT SLIDE)	RH FRT SLIDE FRT RAM (MOTOR DRIVE LINE)
PPE 10 YEL	CONTROL MODULE (RIGHT FRONT SLIDE)	RH FRT SLIDE FRT RAM (MOTOR DRIVE LINE)

WIRE IDENTIFICATION CHART

CODE/COLOR	FROM:	TO:
PPF 10 YEL	CONTROL MODULE (RIGHT FRONT SLIDE)	RH FRT SLIDE RR RAM (MOTOR DRIVE LINE)
PPG 10 YEL	CONTROL MODULE (RIGHT FRONT SLIDE)	RH FRT SLIDE RR RAM (MOTOR DRIVE LINE)
PPH 14 YEL	CHASSIS CLEARANCE LAMPS CRT #2 (REF MM)	CLEARANCE/MARKER LAMPS
PPJ 14 YEL	PASSENGER SUNVISOR SWITCH DRIVER'S SIDE	PASSENGER SUNVISOR SWITCH PASSENGER'S SIDE
PPK 14 YEL	PASSENGER SUNVISOR SWITCH DRIVER'S SIDE	PASSENGER SUNVISOR SWITCH PASSENGER'S SIDE
PPL 14 YEL	DASH RADIO ACCESSORY POWER	TV/RADIO SPEAKER SELECTOR SWITCH
PPM 12 YEL	OVERCURRENT PROTECTION (15A BREAKER TYPICAL)	LEFT FRONT SLIDEOUT LOCK SWITCH
PPN 12 WHT	LEFT FRONT SLIDEOUT LOCK SWITCH (REF PPM)	GROUND
PPP 12 YEL	OVERCURRENT PROTECTION (15A BREAKER TYPICAL)	RIGHT FRONT SLIDEOUT LOCK SWITCH
PPR 12 WHT	RIGHT FRONT SLIDEOUT LOCK SWITCH (REF PPP)	GROUND
PPS 12 YEL	LEFT FRONT SLIDEOUT LOCK SWITCH	LEFT FRONT SLIDEOUT LOCK MOTOR
PPT 12 YEL	LEFT FRONT SLIDEOUT LOCK SWITCH	LEFT FRONT SLIDEOUT LOCK MOTOR
PPU 12 YEL	RIGHT FRONT SLIDEOUT LOCK SWITCH	RIGHT FRONT SLIDEOUT LOCK MOTOR
PPV 12 YEL	RIGHT FRONT SLIDEOUT LOCK SWITCH	RIGHT FRONT SLIDEOUT LOCK MOTOR
PPW 14 YEL	SLIDEOUT LOCK SWITCH W/SLIDEOUT SWITCH #1 IN DASH	SLIDEOUT ROOM #1 SWITCH (POSITIVE)
PPX 14 YEL	SLIDEOUT LOCK SWITCH W/SLIDEOUT SWITCH #3 IN DASH	SLIDEOUT ROOM #3 SWITCH (POSITIVE)
PPY 14 YEL	SLIDEOUT LOCK SWITCH W/SLIDEOUT SWITCH #4 IN DASH	SLIDEOUT ROOM #4 SWITCH (POSITIVE)
PPZ 12 YEL	CHASSIS SUPPLIED WIRING	TRAILER TOW BATTERY FEED (7 WAY TOW CONNECTOR)
RRA 14 YEL	GENERAL SWITCH	GENERAL LAMP

WIRE IDENTIFICATION CHART

CODE/COLOR	FROM:	TO:
RRB 14 YEL	GENERAL SWITCH	GENERAL LAMP
RRC 14 YEL	GENERAL SWITCH	GENERAL LAMP
RRD 14 YEL	GALLEY CEILING FAN SWITCH	GALLEY CEILING FAN
RRE 14 YEL	10 OHM RESISTOR	LOUNGE CEILING FAN (LOW SPEED)
RRF 14 YEL	BEDROOM READING LAMP SWITCH	BEDROOM READING LAMP
RRG 14 YEL	BEDROOM READING LAMP SWITCH #1 (2 SWITCH SYSTEM)	BEDROOM READING LAMP SWITCH #2 (2 SWITCH SYSTEM)
RRH 14 YEL	BEDROOM READING LAMP SWITCH #1 (2 SWITCH SYSTEM)	BEDROOM READING LAMP SWITCH #2 (2 SWITCH SYSTEM)
RRJ 12 WHT	SEVEN PIN CONNECTOR (TRAILER CONNECTOR)	GROUND
RRK 16 YEL	2ND GALLEY HOLDING TANK	SELECTOR SWITCH
RRL 16 YEL	HOLDING TANK SELECTOR SWITCH	MONITOR PANEL
RRM 14 YEL	CENTER POWER SUNVISOR SWITCH	CENTER SUNVISOR
RRN 14 YEL	CENTER POWER SUNVISOR SWITCH	CENTER SUNVISOR
RRP 16 YEL	THERMOSTAT (LOW STAGE)	FURNACE (LOW STAGE)
RRR 16 YEL	THERMOSTAT (HIGH STAGE)	FURNACE (HIGH STAGE)
RRS 16 YEL	SLIDEOUT LOCK SWITCH (#1)	SLIDEOUT LOCK SWITCH (#2)
RRT 16 YEL	AWNING CONTROL BOX (LOCATED IN HOUSING PIN 1)	DOOR AWNING LIMIT SWITCH (LOCATED IN HOUSING PIN 1)
RRU 16 WHT	AWNING CONTROL BOX (LOCATED IN HOUSING PIN 2)	DOOR AWNING LIMIT SWITCH (LOCATED IN HOUSING PIN 2)
RRV 14 YEL	VIDEO CAMERA SWITCHER	MONITOR
RRW 14 YEL	LOCKOUT POSITIONING SWITCH	FIREPLACE LOCKOUT RECP

WIRE IDENTIFICATION CHART

CODE/COLOR	FROM:	TO:
RRX 10 YEL	12V BREAKER PANEL (30 AMP TYPICAL)	SMART FUSE BLOCK (POSITIVE)
RRY 18 YEL	SMART FUSE BLOCK (COMMUNICATION BUS)	SMART FUSE SWITCH PANEL
RRZ 18 WHT	SMART FUSE BLOCK (COMMUNICATION GROUND)	SMART FUSE SWITCH PANEL
SSA 14 WHT	FRONT LEFT SLIDE LOCK (INDICATOR OUTPUT-GROUND)	FRONT LEFT LOCK SWITCH LED
SSB 14 WHT	FRONT RIGHT SLIDE LOCK (INDICATOR OUTPUT-GROUND)	FRONT RIGHT LOCK SWITCH LED
SSC 14 YEL	JACK CONTROL PANEL (LEVEL)	REMOTE AUTO LEVEL SWITCH
SSD 14 YEL	JACK CONTROL PANEL (STORE)	REMOTE AUTO LEVEL SWITCH
SSE 14 YEL	JACK CONTROL PANEL (COMMON)	REMOTE AUTO LEVEL SWITCH (+)HWH (-)KWIKEE
SSF 14 YEL	JACK CONTROL PANEL (INDICATOR LED)	REMOTE AUTO LEVEL SWITCH (-)HWH (+)KWIKEE
SSG 18 YEL	TRANSFORMER	AUTO GENERATOR START MONITOR PANEL
SSH 18 WHT	TRANSFORMER	AUTO GENERATOR START MONITOR PANEL
SSJ 10 YEL	BRAKE CONTROLLER POWER (30-AMP BREAKER TYPICAL)	BRAKE CONTROLLER (POWER INPUT)
SSK 14 WHT	BRAKE CONTROLLER (GROUND)	GROUND
SSL 14 YEL	CHASSIS REAR LAMP WIRING (LEFT TURN ONLY)	LEFT TURN SIGNAL *NOT COMBO TURN/BRAKE*
SSM 14 YEL	CHASSIS REAR LAMP WIRING (RIGHT TURN ONLY)	RIGHT TURN SIGNAL *NOT COMBO TURN/BRAKE*
SSN 18 WHT	FRONT RIGHT SLIDEOUT LOCK END SWITCH (FROM NNS)	CONTROL MODULE (RIGHT FRONT SLIDE)(GROUND)
SSP 18 WHT	LEFT FRONT SLIDEOUT LOCK END SWITCH (FROM DS)	CONTROL MODULE (LEFT FRONT SLIDE)(GROUND)
SSR 16 YEL	EXTERIOR HOLDING TANK SELECTOR SWITCH	EXTERIOR MONITOR PANEL
SSS 16 YEL	EXTERIOR HOLDING TANK SELECTOR SWITCH	2ND GALLEY HOLDING TANK

WIRE IDENTIFICATION CHART

CODE/COLOR	FROM:	TO:
SST 14 YEL	GALLEY LAMP SWITCH #1	GALLEY LAMP SWITCH #2
SSU 14 YEL	GALLEY LAMP SWITCH #1	GALLEY LAMP SWITCH #2
SSV 14 YEL	BATH CEILING LAMP SWITCH #1 (2 SWITCH SYSTEM)	BATH CEILING LAMP SWITCH #2 (2 SWITCH SYSTEM)
SSW 14 YEL	BATH CEILING LAMP SWITCH #1 (2 SWITCH SYSTEM)	BATH CEILING LAMP SWITCH #2 (2 SWITCH SYSTEM)
SSX 12 YEL	DOOR AWNING SWITCH	DOOR AWNING CONTROL RELAY (RELAY POSITION 87A EXTEND)
SSY 12 WHT	DOOR AWNING SWITCH	DOOR AWNING LIMIT SWITCH
SSZ 14 YEL	LOUNGE CEILING ROPE LAMP SWITCH (CIRCUIT #2)	LOUNGE CEILING ROPE LAMP (REF CIRCUIT KKP)
TTA 14 YEL	LEVELING SYSTEM CONTROLS	INDICATOR LAMP/ALARM (POSITIVE)
TTB 14 WHT	LEVELING SYSTEM CONTROLS	INDICATOR LAMP/ALARM (NEGATIVE)
TTC 10 YEL	CHASSIS BATTERY	SLIDEOUT LOCK BREAKER
TTD 14 YEL	VEHICLE LEFT HEADLAMP HI BEAM CIRCUIT	LEFT HI BEAM LAMP
TTE 14 YEL	RELAY	RIGHT DOCKING LAMP
TTF 14 YEL	RELAY	LEFT DOCKING LAMP
TTG 18 YEL	FRONT THERMOSTAT (MAIN)	REMOTE SENSOR
TTH 18 YEL	FRONT THERMOSTAT (MAIN)	REMOTE SENSOR
TTJ 14 YEL	BRAKE LAMP CIRCUIT BREAKER	BRAKE LAMP RELAY
TTK 14 YEL	RIGHT TURNLAMP CIRCUIT BREAKER	RIGHT TURN LAMP RELAY
TTL 14 YEL	LEFT TURN LAMP CIRCUIT BREAKER	LEFT TURN LAMP RELAY
TTM 14 YEL	BACKUP LAMP CIRCUIT BREAKER	BACKUP LAMP RELAY

WIRE IDENTIFICATION CHART

CODE/COLOR	FROM:	TO:
TTN 14 YEL	PARK LAMP CIRCUIT BREAKER	PARK LAMP RELAY
TTP 12 YEL	AWNING CONTROL BOX	PATIO AWNING #2 (MOTOR POSITIVE)
TTR 12 WHT	AWNING CONTROL BOX	PATIO AWNING #2 (MOTOR GROUND)
TTS 16 YEL	AWNING CONTROL BOX	PATIO AWNING #2 (SWITCH EXTEND)
TTT 16 YEL	AWNING CONTROL BOX	PATIO AWNING #2 (SWITCH COMMON)
TTU 16 YEL	AWNING CONTROL BOX	PATIO AWNING #2 (SWITCH RETRACT)
TTV 16 YEL	AWNING CONTROL BOX	WIND SENSOR #2 (POSITIVE)
TTW 16 YEL	AWNING CONTROL BOX	WIND SENSOR #2 (NEGATIVE)
TTX 16 YEL	AWNING CONTROL BOX	WIND SENSOR #2 (SPEED OUTPUT)
TTY 18 YEL	CHASSIS BATT DISCONNECT RELAY (TERMINAL I)	CHASSIS BATT DISCONNECT SWITCH
TTZ 18 YEL	CHASSIS BATT DISCONNECT RELAY (TERMINAL S)	CHASSIS BATT DISCONNECT SWITCH
UUA 18 YEL	CHASSIS BATT DISCONNECT RELAY LOAD SIDE FUSE FEED	CHASSIS BATT DISCONNECT SWITCH INDICATOR LAMP
UUB 18 YEL	CHASSIS BATT DISCONNECT RELAY BATTERY SIDE FUSE FEED	CHASSIS BATT DISCONNECT SWITCH
UUC 18 WHT	CHASSIS BATT DISCONNECT SWITCH	GROUND
UUD 12 YEL	RIGHT REAR SLIDEOUT LOCK SWITCH	RIGHT REAR SLIDEOUT LOCK MOTOR
UUE 12 YEL	RIGHT REAR SLIDEOUT LOCK SWITCH	RIGHT REAR SLIDEOUT LOCK MOTOR