Table of Contents

2004 Brave/Sunrise F34D Wiring Diagram Book

110 Volt Load Center/Auto Transfer Switch
Antenna Installation, Radio and CB
Auto Lamps Wiring Diagram
Automotive Wiring Diagram
Backup Monitor Installation
Body, 110 Volt Wiring Diagram
Body, 110 Volt Wiring Installation
Body, 12 Volt Wiring Diagram
Body, 12 Volt Wiring Installation
Chassis Wiring Installation
Dash Radio Installation
Exterior Lamps Wiring Installation
Front End Wiring Installation
GPS Wiring Installation
Holding Tank Monitor Panel
Holding Tanks Wiring Diagram
TV Coax Wiring Diagram
TV/VCR, Front Wiring Installation

Electrical Parts Identification List
Wiring Identification Guide

Complete Wiring Diagram Book (701674-73-023)

Copyright © 2003 Winnebago Industries, Inc.

DANGER

Danger of electrical shock, burns or death. Always remove all power sources before attempting any repair, service or diagnostic work. Power can be present from shore power, generator, inverter or battery. All power sources must be disabled and secured before performing any service.

CAUTION

If you lack the skills, tools or equipment to perform diagnostic or repair work leave such work to an authorized Winnebago Industries dealer or other qualified shop.

Copyright © 2005 Winnebago Industries, Inc.

		F30W	F32V	F34D	F36M	
BLK	14-UL	136131-06-070	136131-06-035	136131-06-035	136131-06-119	276 29R
	14-CA	136134-06-070	136134-06-035	136134-06-035	136134-06-119	276 29R
BLK	12-UL	136135-06-070	N/A	N/A	N/A	1F7
	12-CA	136136-06-070	N/A	N/A	N/A	1F7
BLU	14-UL	136131-02-157	136131-02-081	136131-02-081	136131-02-195	
	14-CA	136134-02-157	136134-02-081	136134-02-081	136134-02-195	
BRN	14-UL	136131-03-070	136131-03-097	136131-03-135	136131-03-171	
	14-CA	136134-03-070	136134-03-097	136134-03-135	136134-03-171	
GLD	12-UL	N/A	N/A	136135-10-130	136135-10-112	21M 54E
	12-CA	N/A	N/A	136136-10-130	136136-10-112	21M 54E
GRN	12-UL	N/A	136135-08-118	136135-08-118	136135-08-027	276 29R 78J
	12-CA	N/A	136136-08-118	136136-08-118	136136-08-027	276 29R 78J
GRN	12-UL	136135-08-075	136135-08-100	136135-08-105	136135-08-056	276 29R 12D
	12-CA	136136-08-075	136136-08-100	136136-08-105	136136-08-056	276 29R 12D
GRN 2	12-UL	136135-14-067	136135-14-069	136135-14-066	136135-14-054	276 29R 12D
	12-CA	136136-14-067	136136-14-069	136136-14-066	136136-14-054	276 29R 12D
PUR	14-UL	136131-04-100	136131-04-230	136131-04-210	136131-04-096	
	14-CA	136134-04-100	136134-04-230	136134-04-210	136134-04-096	
RED	12-UL	136135-07-096	136135-07-112	136135-07-109	136135-07-027	
	12-CA	136136-07-096	136136-07-112	136136-07-109	136136-07-027	
WHT	12-UL	136135-09-079	136135-09-085	136135-09-085	136135-09-095	53D
	12-CA	136136-09-079	136136-09-085	136136-09-085	136136-09-095	53D
YEL	14-UL	136131-05-028	N/A	N/A	N/A	1F7
	14-CA	136134-05-028	N/A	N/A	N/A	1F7
YEL	14-UL	136131-05-014	136131-05-035	136131-05-035	136131-05-119	276 29R
	14-CA	136134-05-014	136134-05-035	136134-05-035	136134-05-119	276 29R
YEL 2	14-UL	136131-13-028	136131-13-055	136131-13-055	136131-13-101	276 29R
	14-CA	136134-13-028	136134-13-055	136134-13-055	136134-13-101	276 29R
MAIN	10-UL	136137-01-075	136137-01-100	136137-01-105	136137-01-056	12D
	10-CA	136138-01-075	136138-01-100	136138-01-105	136138-01-056	12D
	6-3 UL	136139-01-075	136139-01-100	136139-01-105	136139-01-056	78J
	6-3 CA	136140-01-075	136140-01-100	136140-01-105	136140-01-056	78J
MAIN GROUND		136145-01-020	136145-01-034	136145-01-034	136145-01-040	
ATS GROUND		136145-01-060	136145-01-065	136145-01-070	136145-01-026	276 29R
THROW IN WIRE #1	14-UL	136131-03-080	136131-03-062	136131-03-068	136131-03-072	
	14-CA	136134-03-080	136134-03-062	136134-03-068	136134-03-072	
SLIDEOUT WIRE #1		136151-03-030	136151-03-028	136151-03-028	136151-03-028	
SLIDEOUT WIRE #2		136151-04-026	136151-04-017	136151-04-017	136151-04-017	
SLIDEOUT WIRE #3		136152-06-030	N/A	N/A	N/A	

RELEASE | REV A | DATE | DWG NO 144656

REV	ZONE	REVISION RECORD	DATE	DFTR-ORIG

78J ELECTRICAL SYSTEM - 50 AMP
54E WASHER/DRYER COMBINATION
53D WTR HTR - 6 GAL/ELE/LP/MOTORAID
29R HEAT PUMPS - 2-HI EFF
276 A/C ROOF - HI EFF (2) W/EMS
265 CODES/STANDARDS - CSA/CMVSS
21M WASHER/DRYER PREP
1F7 ENERGY MANAGEMENT SYSTEM W/O
1B1 CODES/STANDARDS - USA
12D ELECTRICAL SYSTEM - 30 AMP

1B1 265

COPYRIGHT 2004
WINNEBAGO
INDUSTRIES, INC.

DFTR	ORIG. DATE
CHKR	ALL DIMENSIONS ARE IN MILLIMETERS
P.E.	
M.E.	FIRST USED
DSNR	04 F-SERIES

UNSPECIFIED TOLERANCES ARE:
WHOLE DIM (X) : 1
ONE-PLACE (X.X) : 1.5
TWO-PLACE (X.XX) : 0.50
ANGLE : 1°
THIRD ANGLE PROJECTION

MATERIAL:

DO NOT SCALE DRAWING

TITLE: LOAD CENTER/ATS ASM

SHEET 1 OF 5 | PART NO 144656

DWG NO 144656

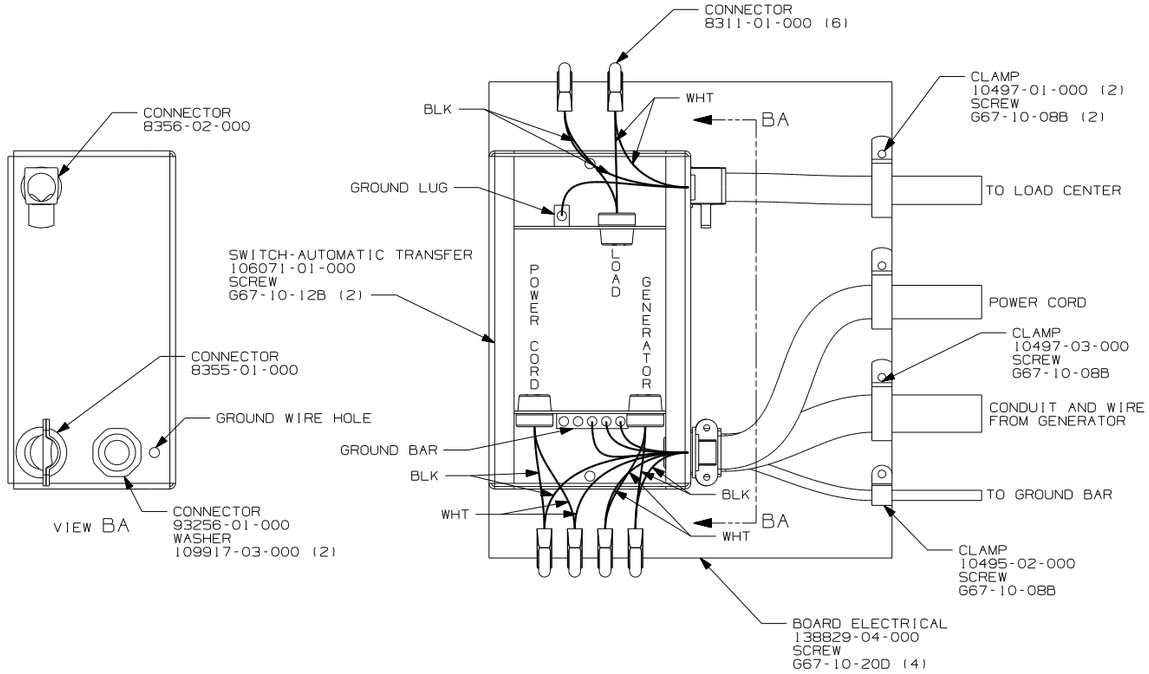

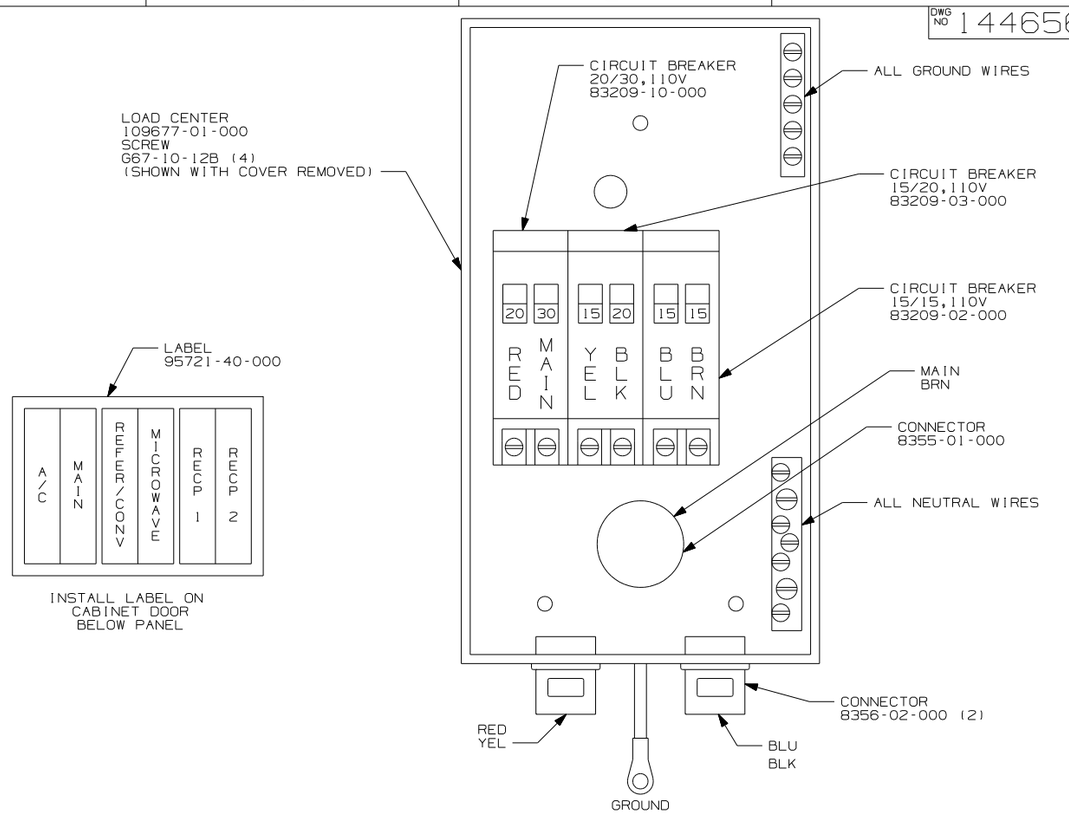

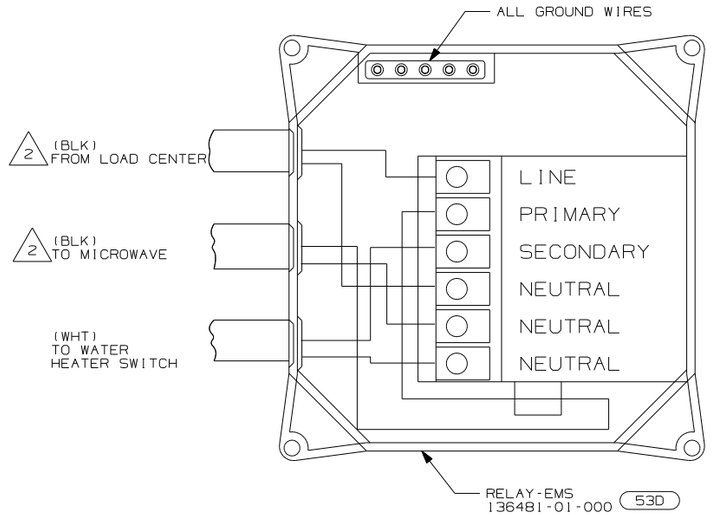

53D WTR HTR-6 GAL/ELE/LP/MOTORAID
265 CODES/STANDARDS - CSA/CMVSS
1F7 ENERGY MANAGEMENT SYSTEM W/O
1B1 CODES/STANDARDS - USA
12D ELECTRICAL SYSTEM - 30 AMP

12D 1B1 1F7 265

2 MEASURE 1000MM FROM THE BACK OF THE LOAD CENTER, LOOP THE BLACK WIRE AND CONNECT AS SHOWN.

NOTES:

1. ALL GROUND WIRES TO BE COVERED WITH TUBING 8041-02-000.

FOR ELECTRICAL TORQUE SPECIFICATIONS SEE DWG NO. 128783-01-000

X-X FOR ELECTRICAL CALLOUTS SEE DWG NO. 121339-01-000

FIRST USED 04 F-SERIES

DO NOT SCALE DRAWING

TITLE: LOAD CENTER/ATS ASM

SHEET 2 PART NO 144656

DWG NO 144656

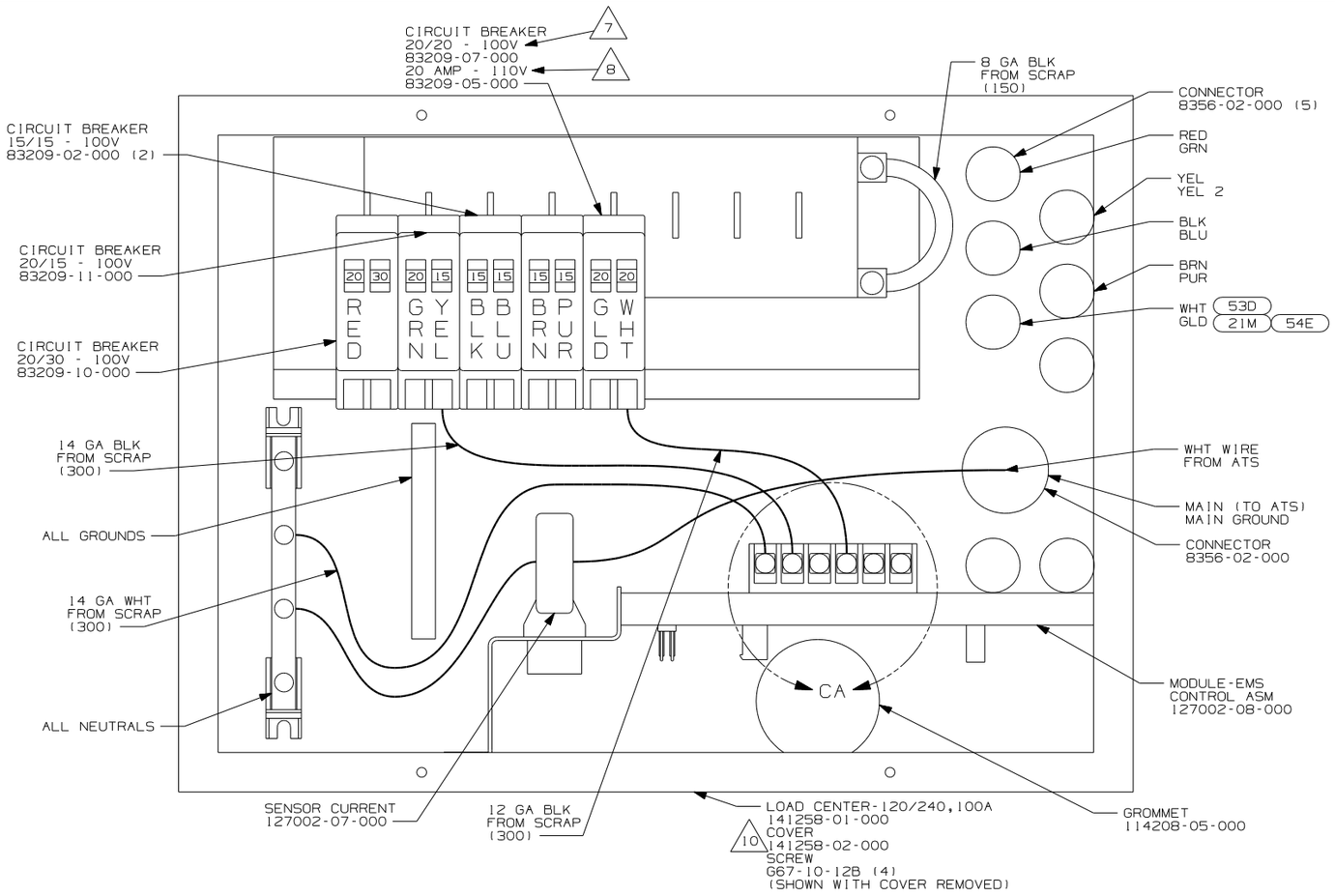

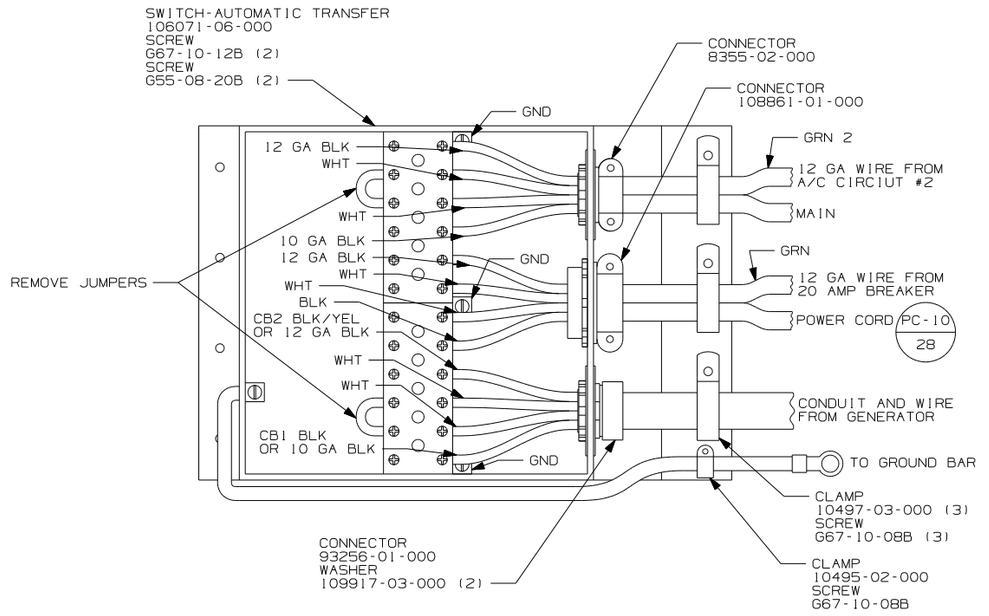

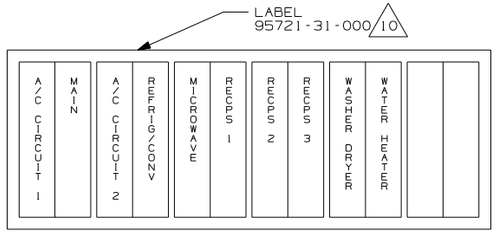

INSTALL LABEL ON FRONT PANEL BELOW BREAKERS BETWEEN MOUNTING HOLES

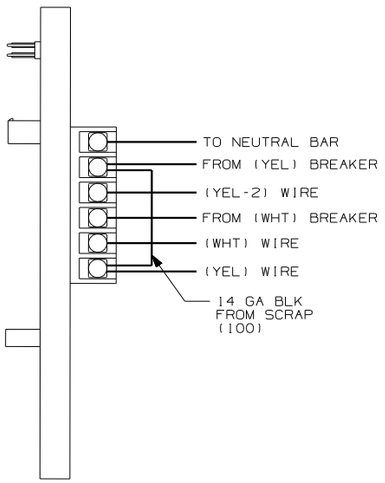

DETAIL CA

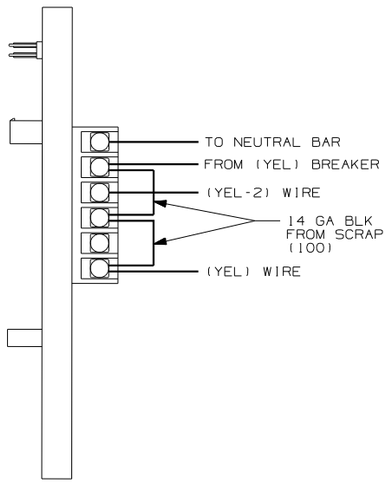

DETAIL CA 9

10 INSTALLED BY ASSEMBLY LINE.

9 WITHOUT (53D).

8 WITH (21M) WITHOUT (53D), OR WITH (54E) WITHOUT (53D), OR WITH (53D) WITHOUT (21M) (54E) ONLY.

7 WITH (21M) (53D) OR (54E) (53D) ONLY.

6. ALL WIRES MUST BE 500MM LONG INSIDE LOAD CENTER.

5. ATTACH WIRES TO BACKSIDE OF LOAD CENTER, USE EXISTING HOLES AND TIE-WIRE 116673-01-000.

4. ALL 110V STRANDED WIRE W/O TERMINALS TO BE STRIPPED 10MM AND SOLDER DIPPED.

3. ALL WIRES TO BE CLAMPED WITHIN 200MM OF ATS.

2. GROUND WIRES ARE NOT SHOWN FOR CLARITY.

1. ALL GROUND WIRES TO BE COVERED WITH TUBING 8041-02-000.

NOTES:

(54E) WASHER/DRYER
(53D) WTR HTR - 6 GAL/ELE/LP/MOTORAID
(29R) HEAT PUMPS-2-HI EFF
(276) A/C ROOF - HI EFF (2) W/EMS
(265) CODES/STANDARDS - CSA/CMVSS
(21M) WASHER/DRYER PREP
(1B1) CODES/STANDARDS - USA
(12D) ELECTRICAL SYSTEM - 30 AMP

(12D) (1B1) (265) (276) (29R)

FOR ELECTRICAL TORQUE SPECIFICATIONS SEE DWG NO. 128783-01-000

X-X FOR ELECTRICAL CALLOUTS SEE DWG NO. 121339-01-000

FIRST USED 04 F-SERIES

DO NOT SCALE DRAWING

TITLE: LOAD CENTER/ATS ASM

SHEET 3 PART NO 144656

DWG NO 144656

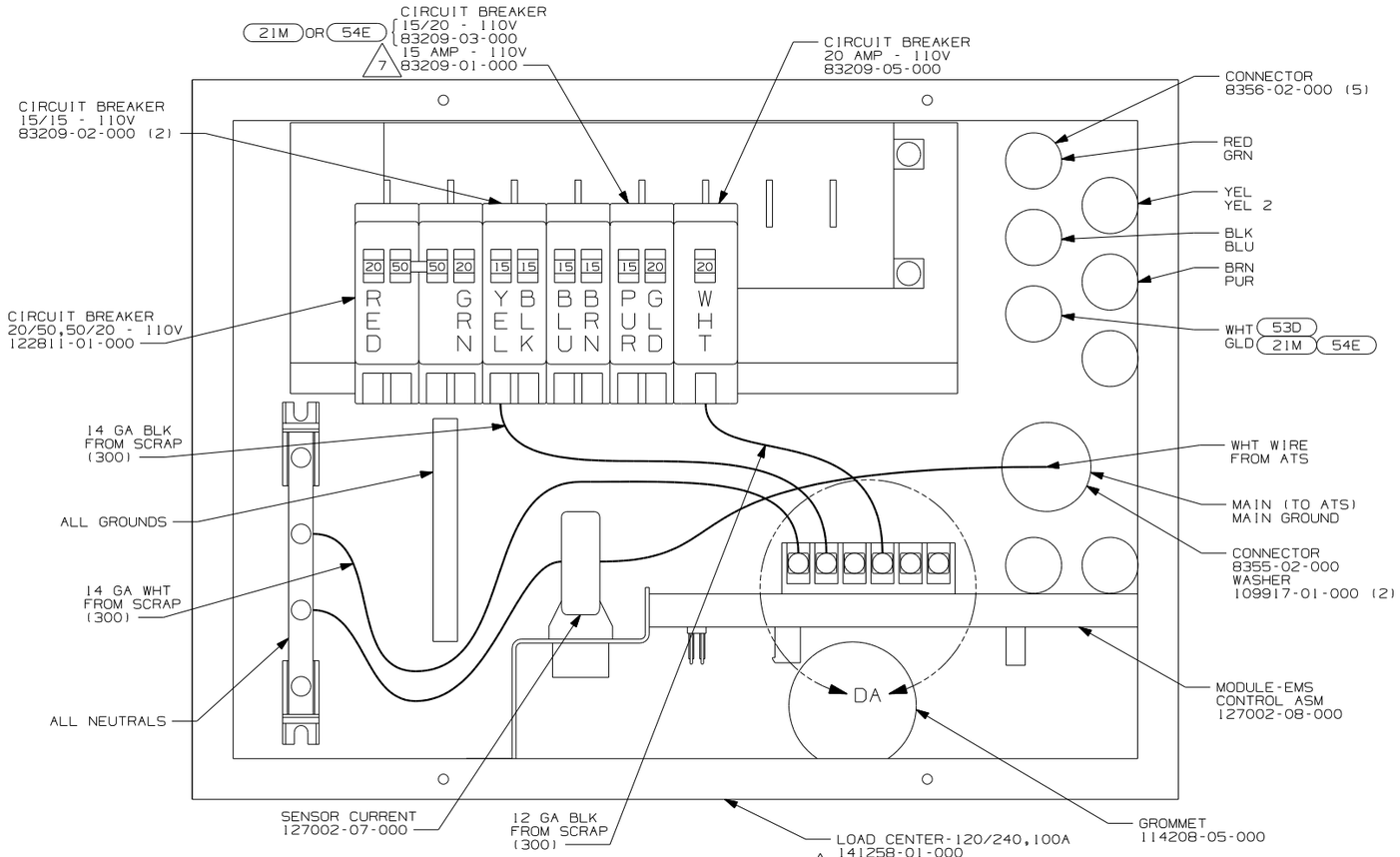

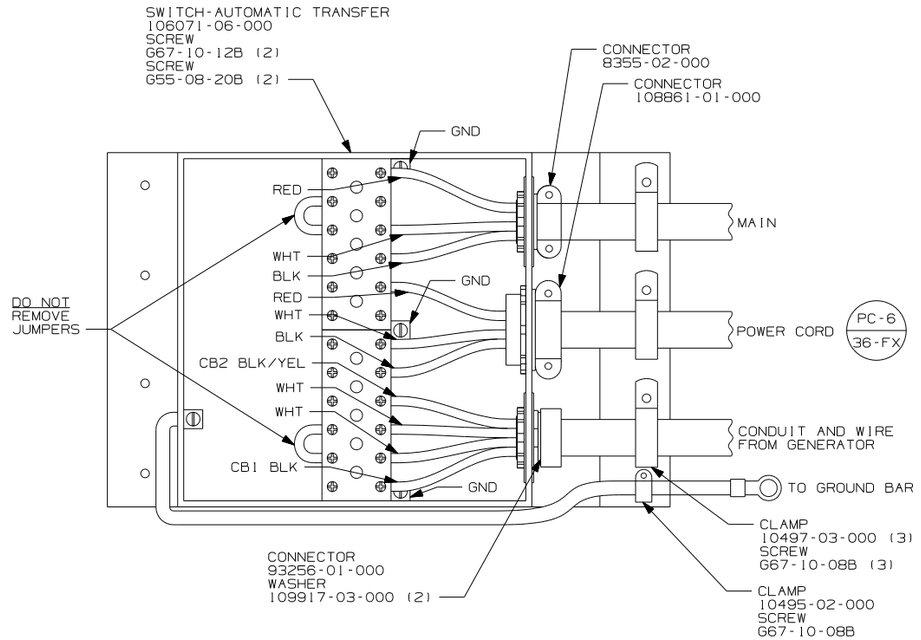

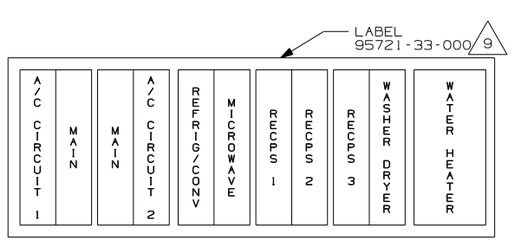

INSTALL LABEL ON FRONT COVER PLATE BELOW THE BREAKERS

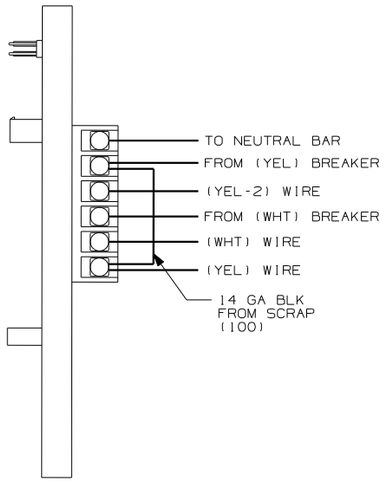

DETAIL DA

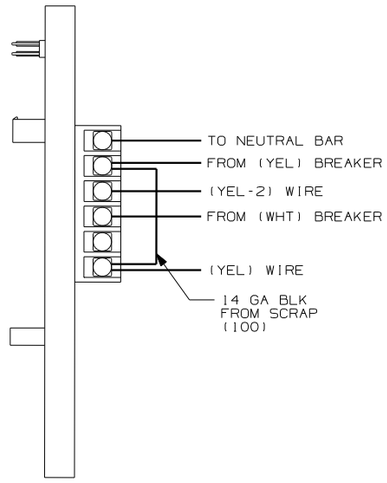

DETAIL DA 8

9 INSTALLED BY ASSEMBLY LINE.

8 WITHOUT (53D).

7 WITHOUT (21M) OR (54E).

6. ALL WIRES MUST BE 500MM LONG INSIDE LOAD CENTER.

5. ATTACH WIRES TO BACKSIDE OF LOAD CENTER, USE EXISTING HOLES AND TIE-WIRE 116673-01-000.

4. ALL 110V STRANDED WIRE W/O TERMINALS TO BE STRIPPED 10MM AND SOLDER DIPPED.

3. ALL WIRES TO BE CLAMPED WITHIN 200MM OF ATS.

2. GROUND WIRES ARE NOT SHOWN FOR CLARITY.

1. ALL GROUND WIRES TO BE COVERED WITH TUBING 8041-02-000.

NOTES:

(78J) ELECTRICAL SYSTEM - 50 AMP
(54E) WASHER/DRYER
(29R) HEAT PUMPS-2-HI EFF
(276) A/C ROOF-HI EFF (2) W/EMS
(265) CODES/STANDARDS - CSA/CMVSS
(21M) WASHER/DRYER PREP
(1F7) ENERGY MANAGEMENT SYSTEM W/O
(1B1) CODES/STANDARDS - USA

(1B1) (265) (276) (29R) (78J)

FOR ELECTRICAL TORQUE SPECIFICATIONS SEE DWG NO. 128783-01-000

(X-X) FOR ELECTRICAL CALLOUTS SEE DWG NO. 121339-01-000

FIRST USED 04 F-SERIES

DO NOT SCALE DRAWING

TITLE: LOAD CENTER/ATS ASM

SHEET 4 PART NO 144656

DWG NO 144656

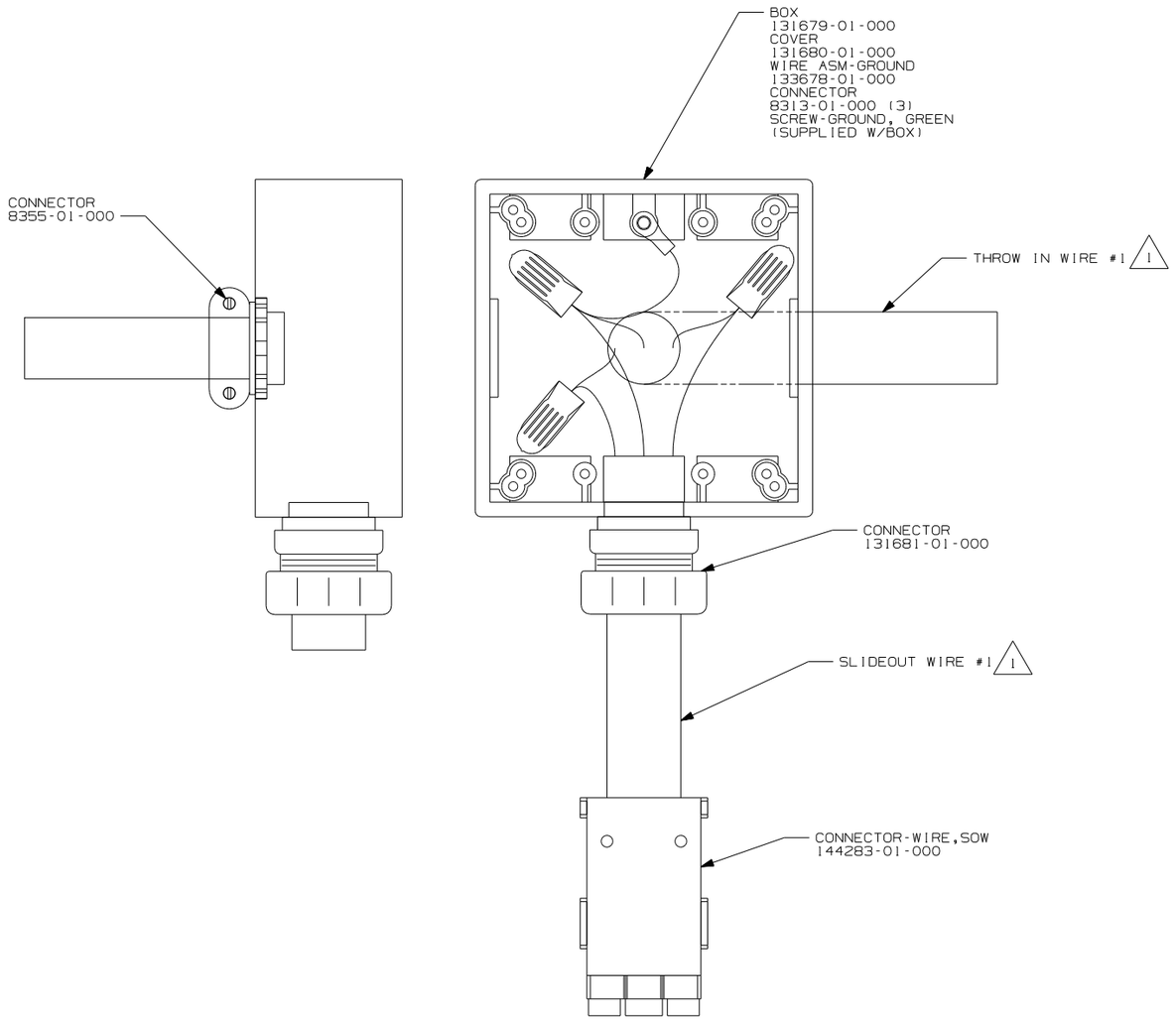

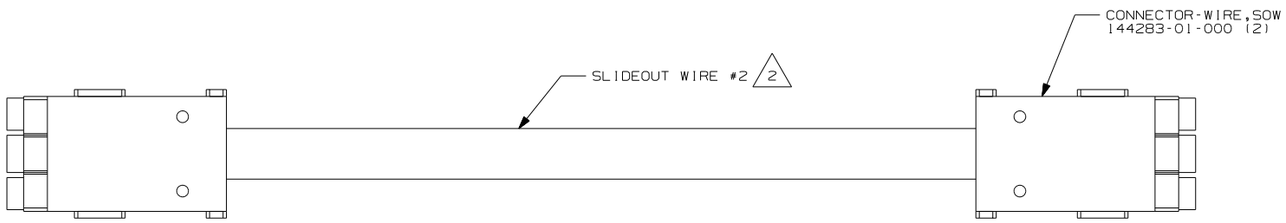

78J ELECTRICAL SYSTEM - 50 AMP
265 CODES/STANDARDS - CSA/CMVSS
1B1 CODES/STANDARDS - USA
12D ELECTRICAL SYSTEM - 30 AMP

12D 1B1 265 78J

2 THIS APPLIES TO THE F30W, F32V, F34D, AND F36M.

1 THIS APPLIES TO THE F32V, F34D, AND F36M.

NOTES:

FIRST USED 04 F-SERIES

DO NOT SCALE DRAWING

TITLE: LOAD CENTER/ATS ASM

SHEET 5 PART NO 144656

DWG NO	SHEET
145114-01	1
145114-02	2
145114-03	3

RELEASE	REV A	DATE	DWG NO 145114

REV	ZONE	REVISION RECORD	DATE	DFTR-ORIG

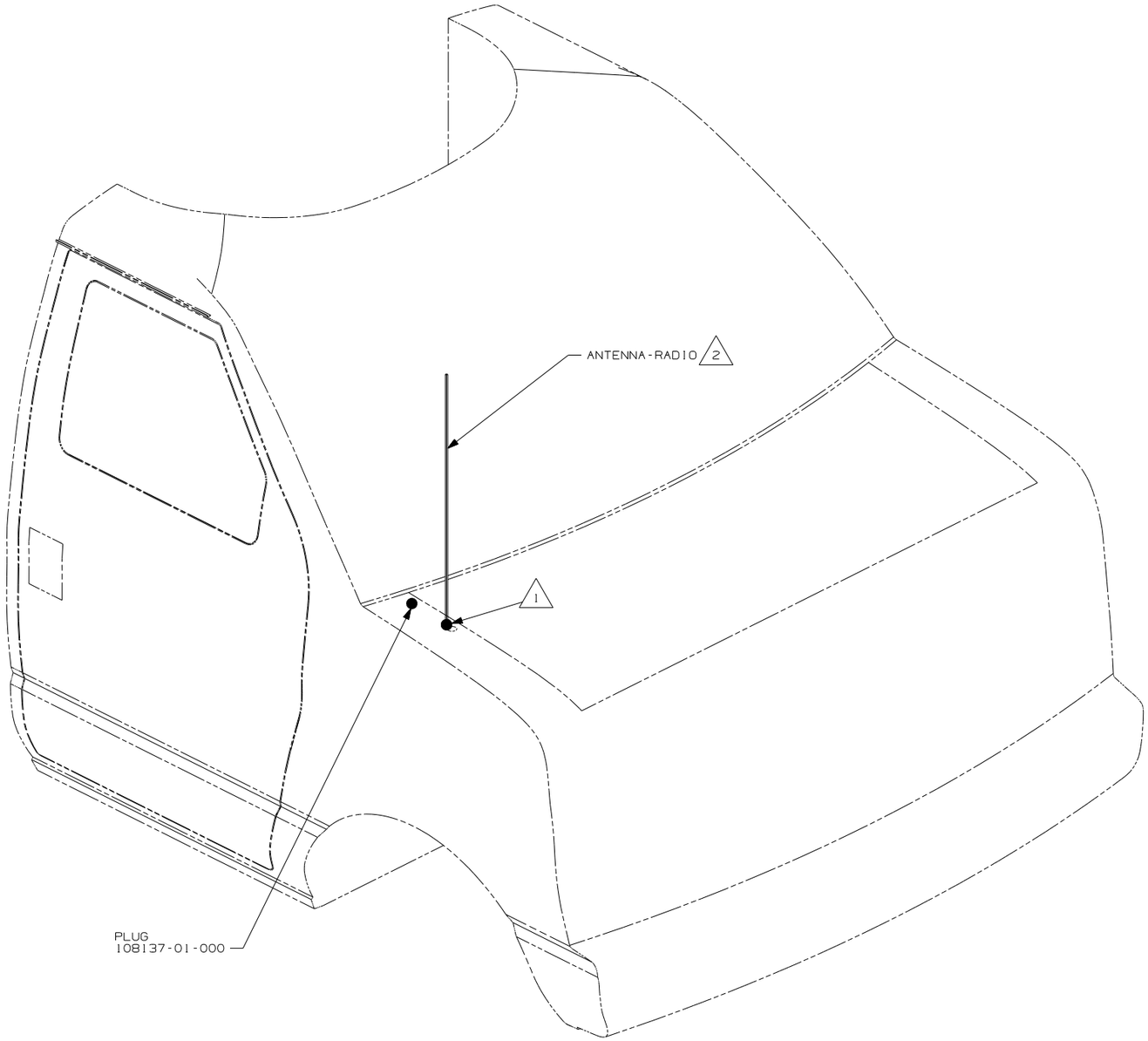

14 SEE WIRING INSTL-FRONT END FOR ADDITIONAL INFORMATION.

13 MOUNT ANTENNA SUCH THAT BASE IS SQUARE W/ REAR OF ROOF CAP & HOLE IS DIRECTLY OVER HOLE IN FIBERGLASS. SEAL HOLE IN ROOF CAP, BASE AT SCREWS.

12 TAPE CABLE EXTENSION TO CABLE ANTENNA AT CONNECTION, USE TAPE 8363-01-000.

11 USE HOLE IN BRACKET AS GUIDE TO DRILL 13 DIAMETER HOLE IN FIBERGLASS.

10 TO RADIO.

9 ATTACH ANTENNA-CB GROUND WIRE TO CAB FRAME, USE SCREW G39-08-08B.

8 SEAL AROUND ANTENNA BASE.

7 ROUTE CABLE ALONG A-POST,UNDER TRIM COVER.

6 40J CB PREP

5 MEASURED FROM REAR EDGE OF FIBERGLASS CAP.

4 SEE WIRING INSTL-FRONT END FOR LOCATION OF COAX END AND LABEL.

3 DO NOT RELOCATE ANTENNA ON SHELLS.

2 SUPPLIED WITH CHASSIS.

1 SEE FRAME ASM-CHASSIS FOR HOLE LOCATION AND SIZE.

NOTES:

FORD CHASSIS
300 SERIES
EXCEPT SHELLS

WINNEBAGO INDUSTRIES

COPYRIGHT 2005
WINNEBAGO
INDUSTRIES, INC.

DFTR	ORIG. DATE
CHKR	ALL DIMENSIONS ARE IN MILLIMETERS
P.E.	
M.E.	FIRST USED
DSNR	04 MOTORHOMES

UNSPECIFIED TOLERANCES ARE:
WHOLE DIM (X) :
ONE-PLACE (X.X) :
TWO-PLACE (X.XX) :
ANGLE :

MATERIAL:

THIRD ANGLE PROJECTION

DO NOT SCALE DRAWING

TITLE:
ANTENNA INSTL-RADIO AND CB

SHEET 1 OF 3 | PART NO 145114

REF: 1 10/31/2005

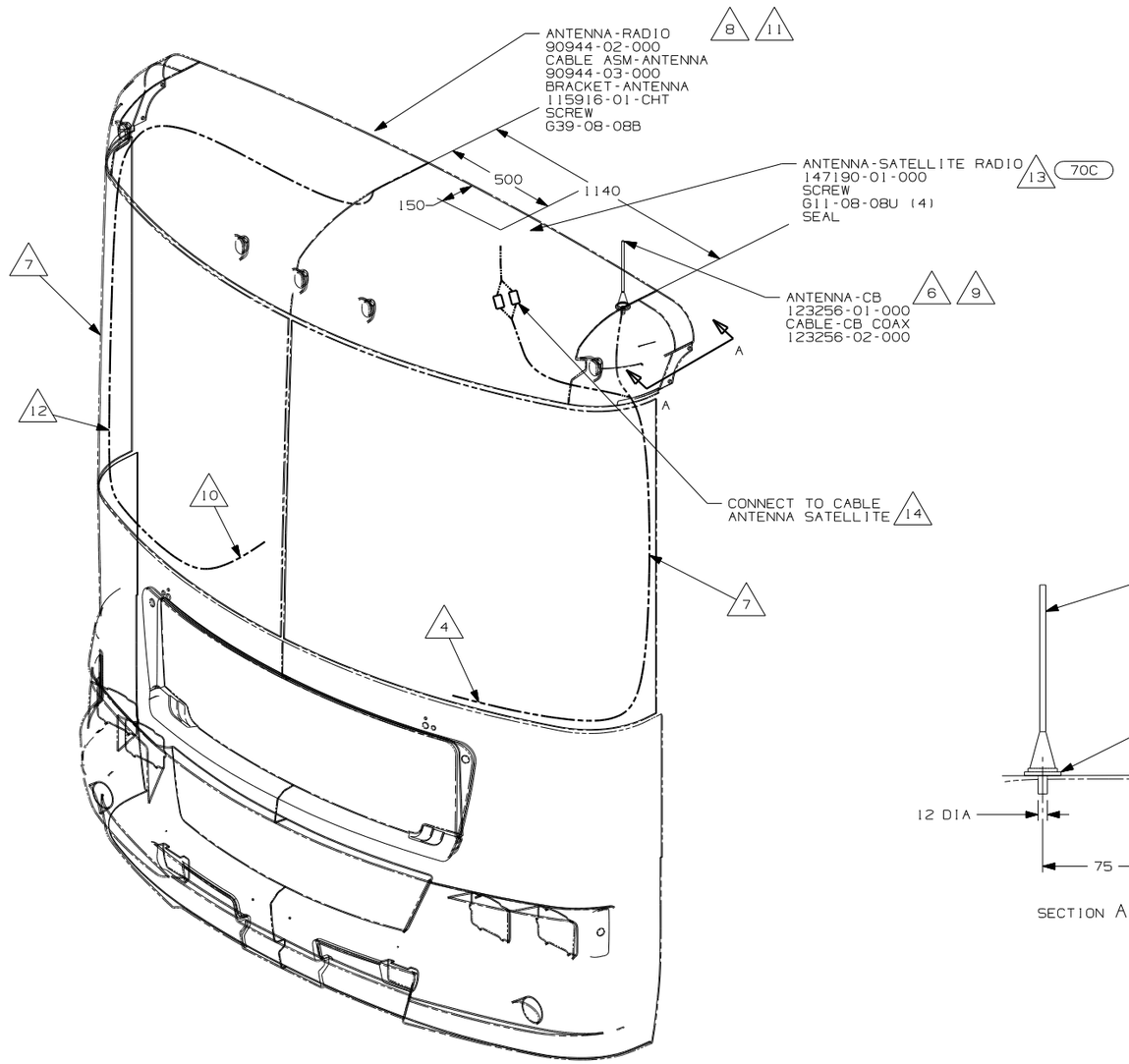

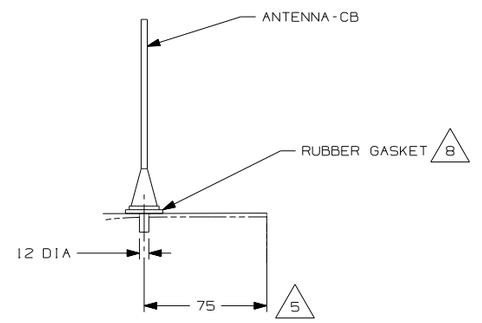

SECTION A

70C RADIO - SATELLITE

FIRST USED: D,L,F&G-SERIES,40J CB PREP	
DO NOT SCALE DRAWING	
TITLE: ANTENNA INSTL-RADIO AND CB	
SHEET 2	PART NO 145114

DWG NO 145114

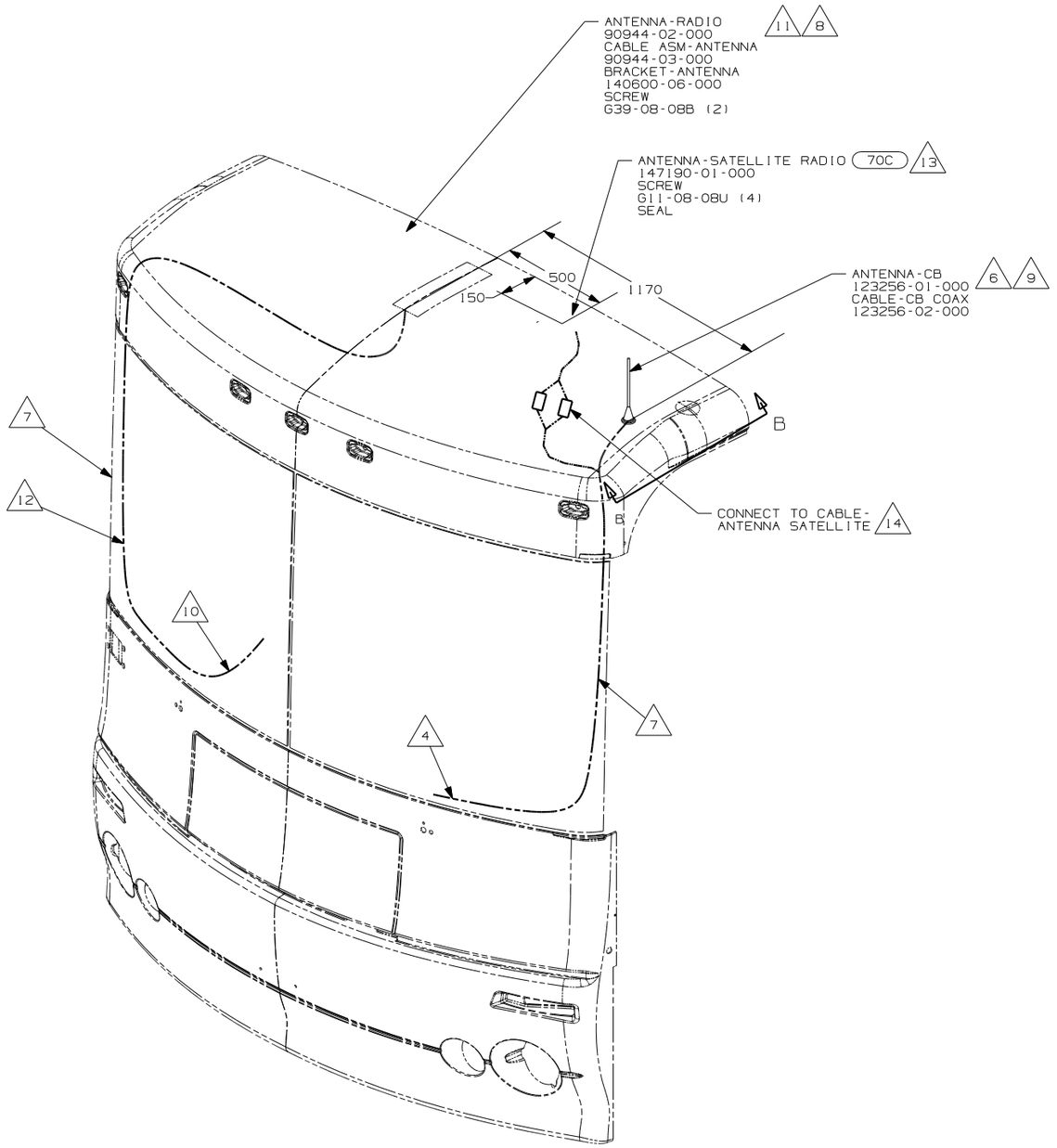

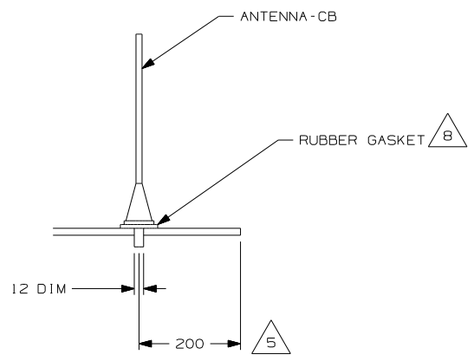

SECTION B

70C RADIO - SATELLITE

FIRST USED: P,Q & S-SERIES, 40J CB PREP	
DO NOT SCALE DRAWING	
TITLE: ANTENNA INSTL-RADIO AND CB	
SHEET 3	PART NO 145114

RELEASE	REV A	DATE	DWG NO 144953

REV	ZONE	REVISION RECORD	DATE	DFTR-ORIG

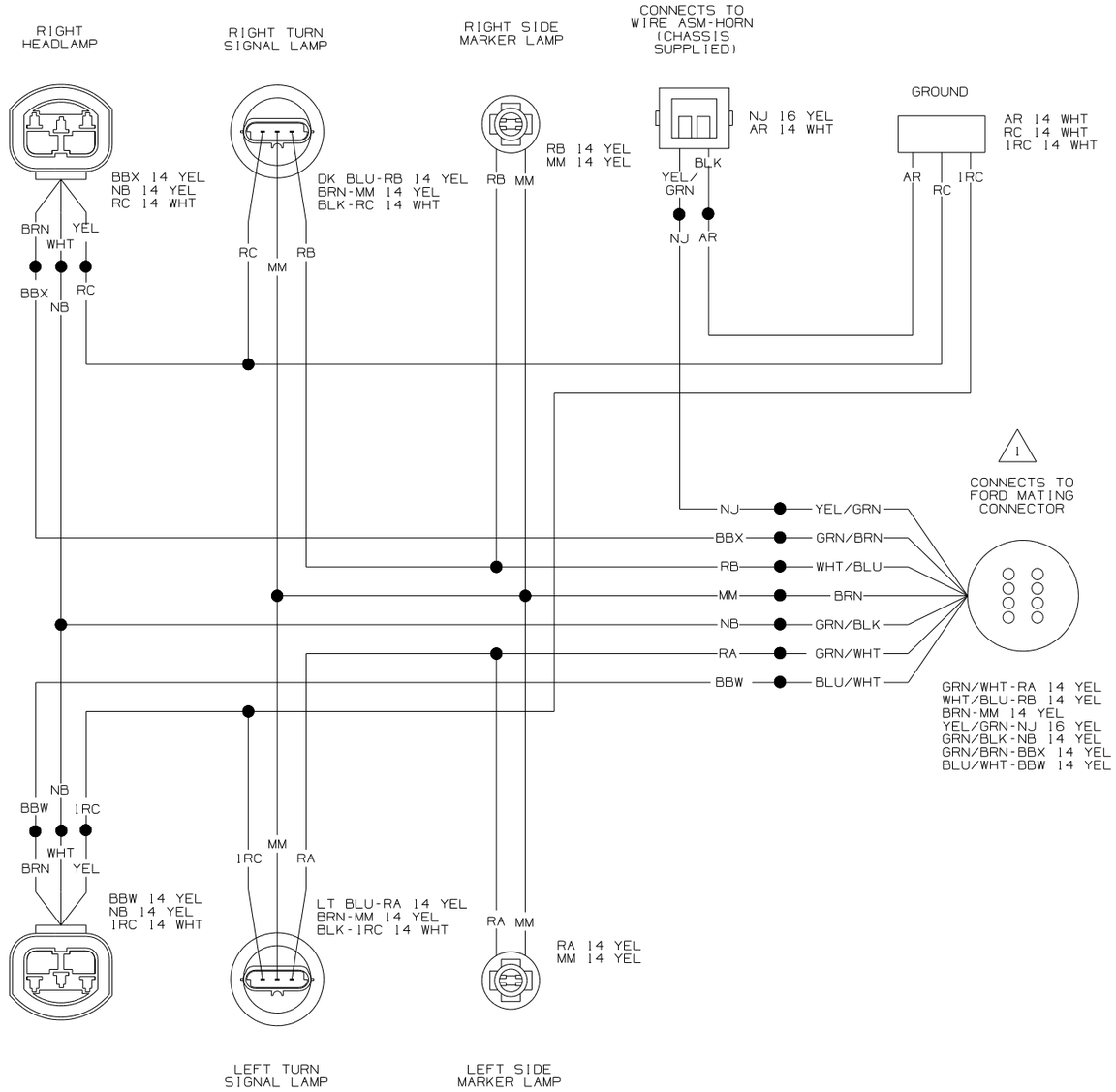

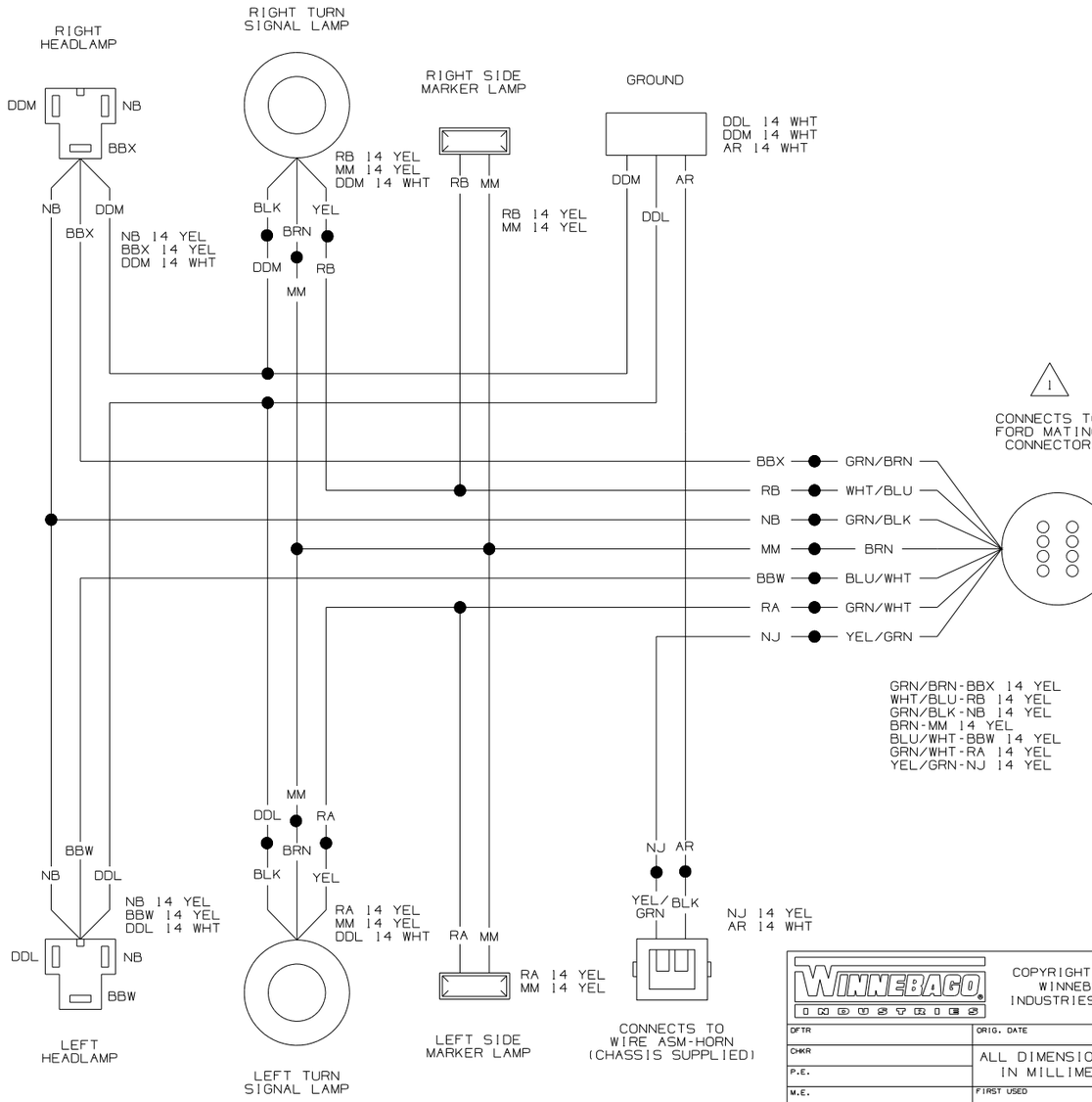

1 SEE MANUFACTURERS DIAGRAM FOR ADDITIONAL INFORMATION.

NOTES:

WIRING DIAGRAM-HEADLAMP
(WIRE ASM 126816-06-000 REV.P)
(FORD CHASSIS ONLY)
(ITASCA ONLY)

WIRING DIAGRAM-HEADLAMP
(WIRE ASM 115928-11-000 REV.V)
(FORD CHASSIS ONLY)
(WINNEBAGO ONLY)

COPYRIGHT 2002
WINNEBAGO
INDUSTRIES, INC.

DFTR	ORIG. DATE
CHKR	ALL DIMENSIONS ARE IN MILLIMETERS
P.E.	
M.E.	FIRST USED
DSNR	04 F-SERIES

UNSPECIFIED TOLERANCES ARE:
WHOLE DIM (X) ±
ONE-PLACE (X.X) ±
TWO-PLACE (X.XX) ±
ANGLE ±

MATERIAL:

THIRD ANGLE PROJECTION

DO NOT SCALE DRAWING

TITLE: WIRING DIAGRAM-AUTO LAMPS

SHEET 1 OF 5 | PART NO 144953

DWG NO 144953

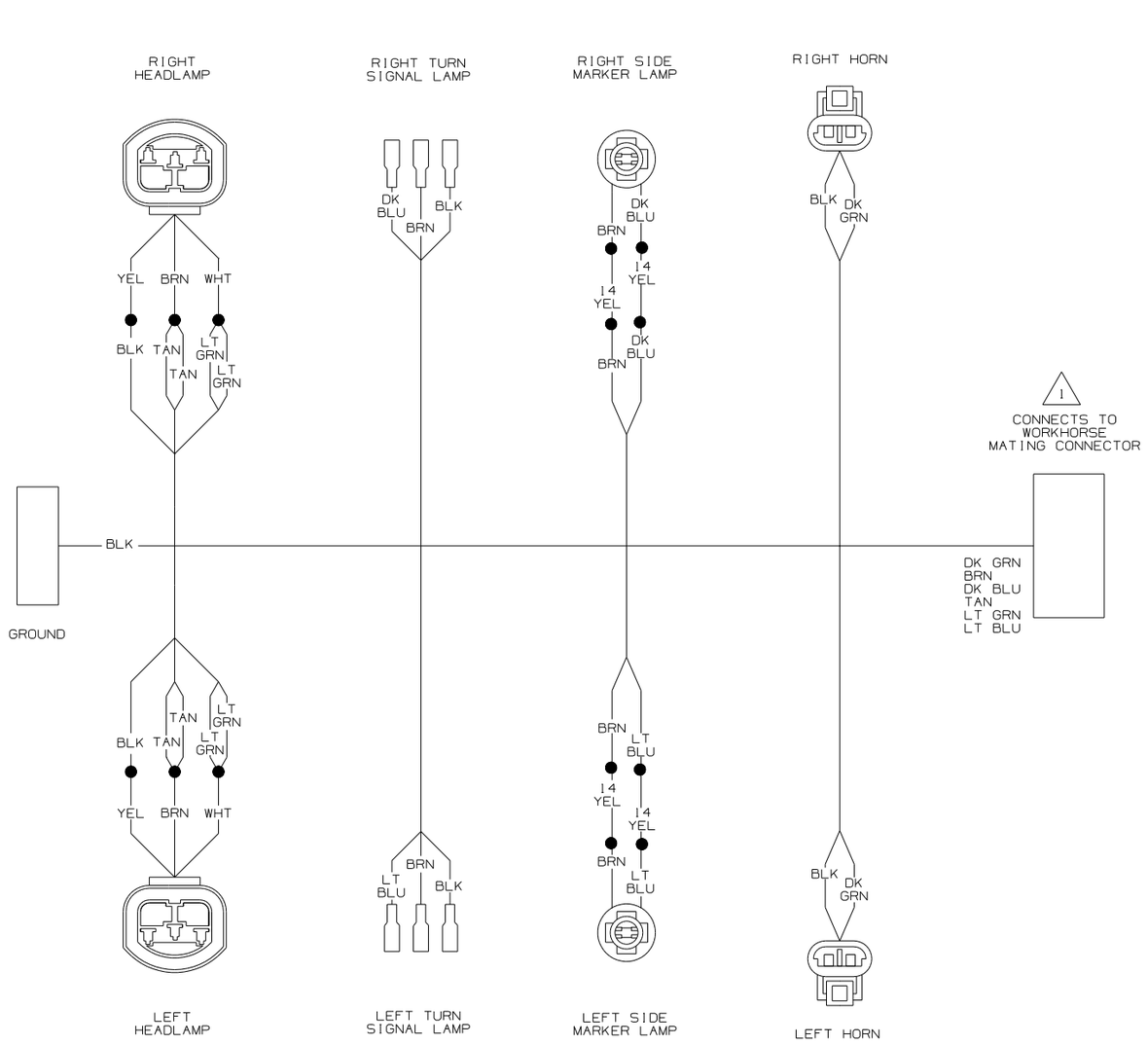

WIRING DIAGRAM-HEADLAMP
(WIRE ASM 126816-05-000 REV.P)
(WORKHORSE 2002 CHASSIS ONLY)
(ITASCA ONLY)

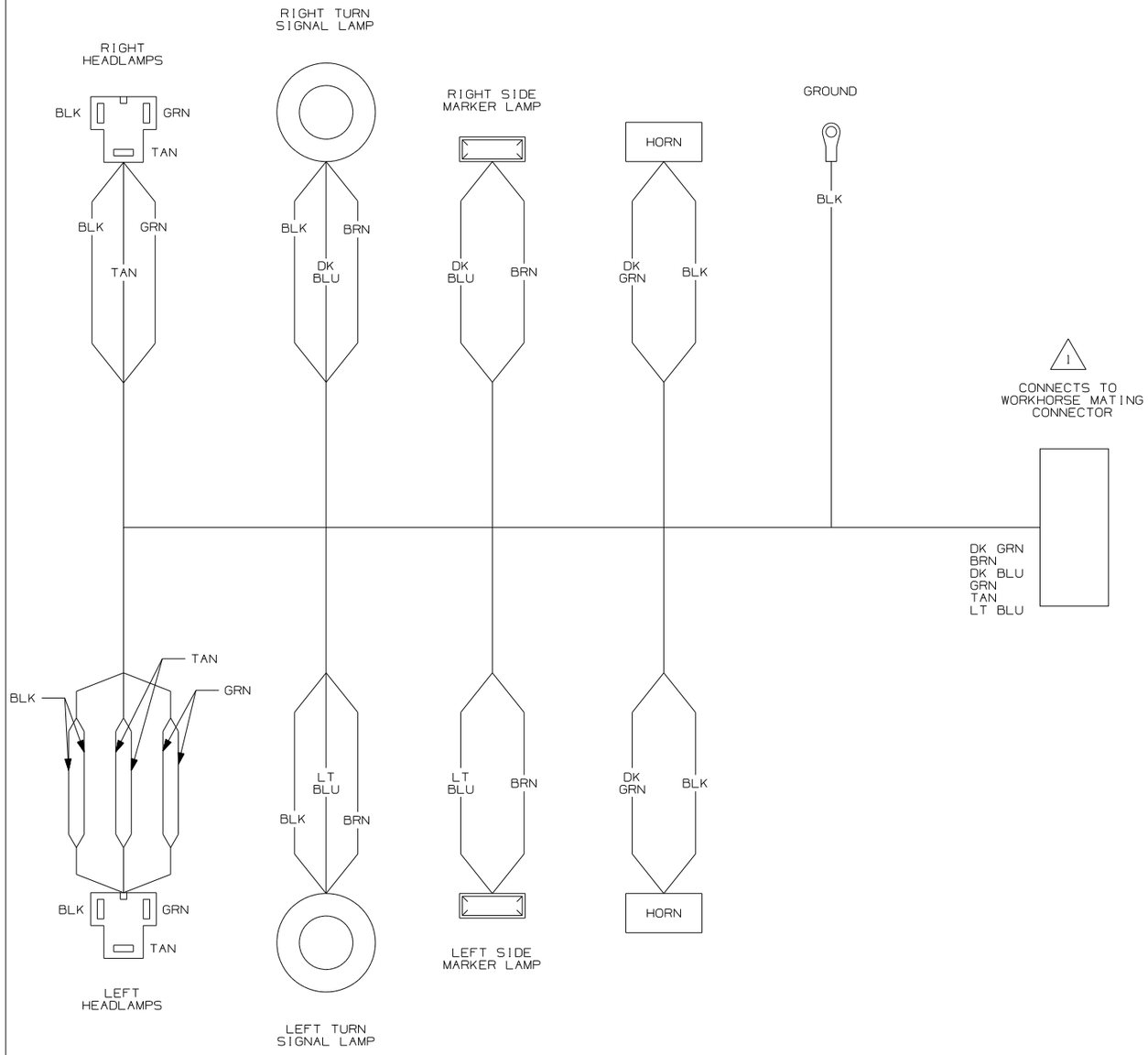

WIRING DIAGRAM-HEADLAMP
(WIRE ASM 115928-10-000 REV.V)
(WORKHORSE 2002 CHASSIS ONLY)
(WINNEBAGO ONLY)

1 SEE MANUFACTURERS DIAGRAM FOR ADDITIONAL INFORMATION.

NOTES:

FIRST USED	04 F-SERIES
	DO NOT SCALE DRAWING
TITLE:	WIRING DIAGRAM-AUTO LAMPS
SHEET 2	PART NO 144953

DWG NO 144953

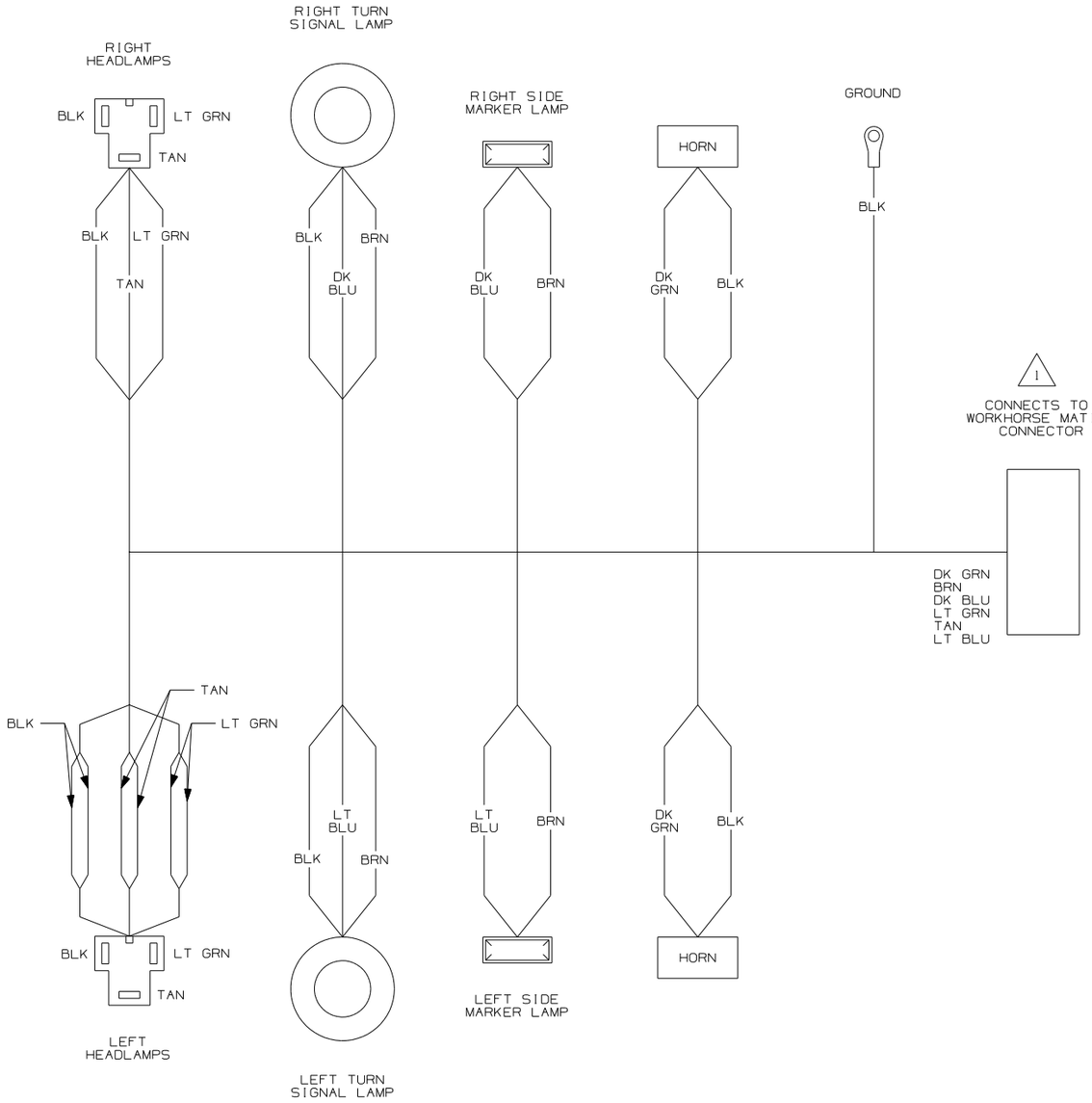

WIRING DIAGRAM-HEADLAMP
(WIRE ASM 115928-12-000 REV.V)
(WORKHORSE 2003 CHASSIS ONLY)
(WINNEBAGO ONLY)

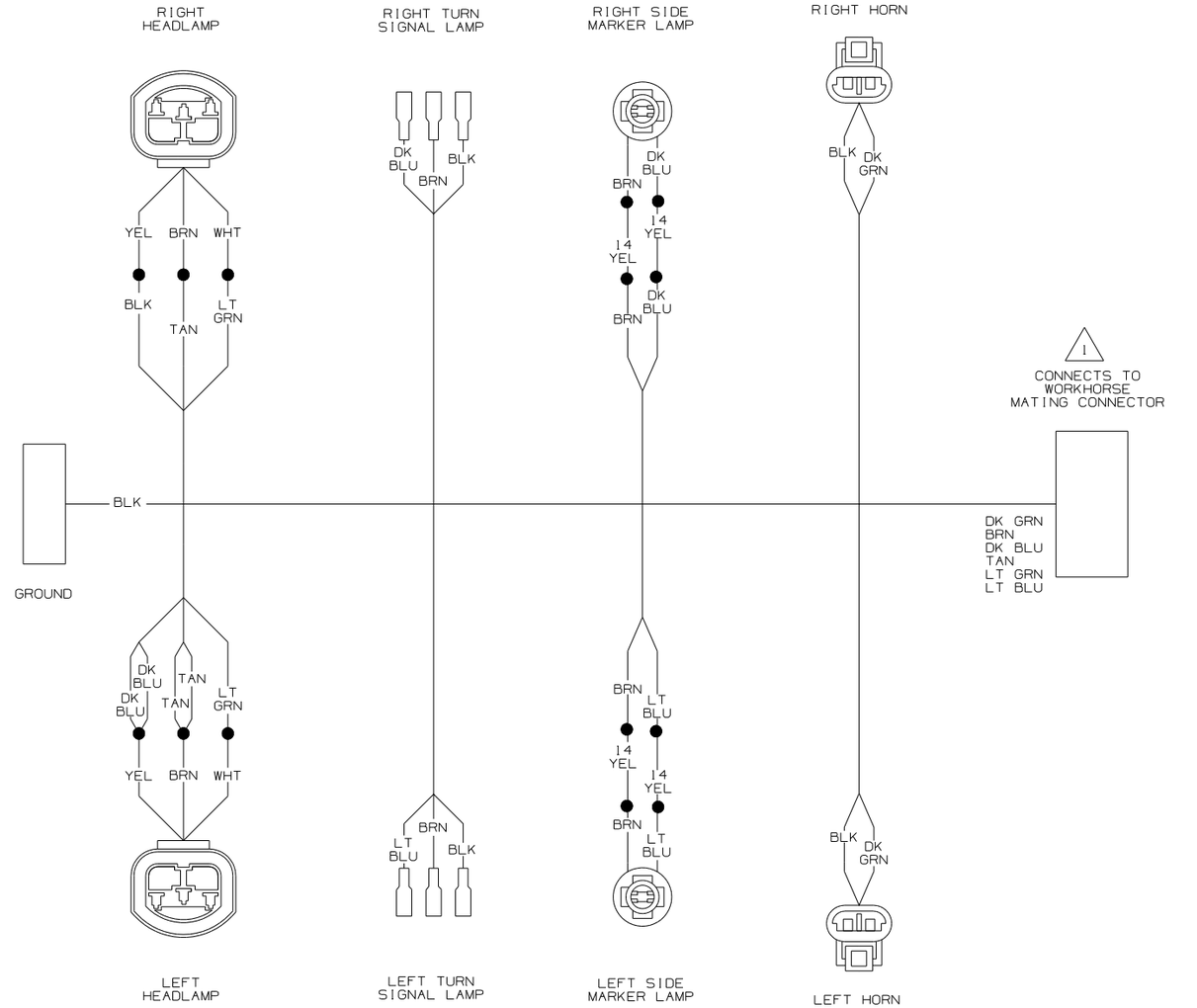

WIRING DIAGRAM-HEADLAMP
(WIRE ASM 126816-07-000 REV.P)
(WORKHORSE 2003 CHASSIS ONLY)
(ITASCA ONLY)

1 SEE MANUFACTURERS DIAGRAM FOR ADDITIONAL INFORMATION.

NOTES:

FIRST USED	04 F-SERIES
	DO NOT SCALE DRAWING
TITLE:	WIRING DIAGRAM-AUTO LAMPS
SHEET 3	PART NO 144953

DWG NO 144953

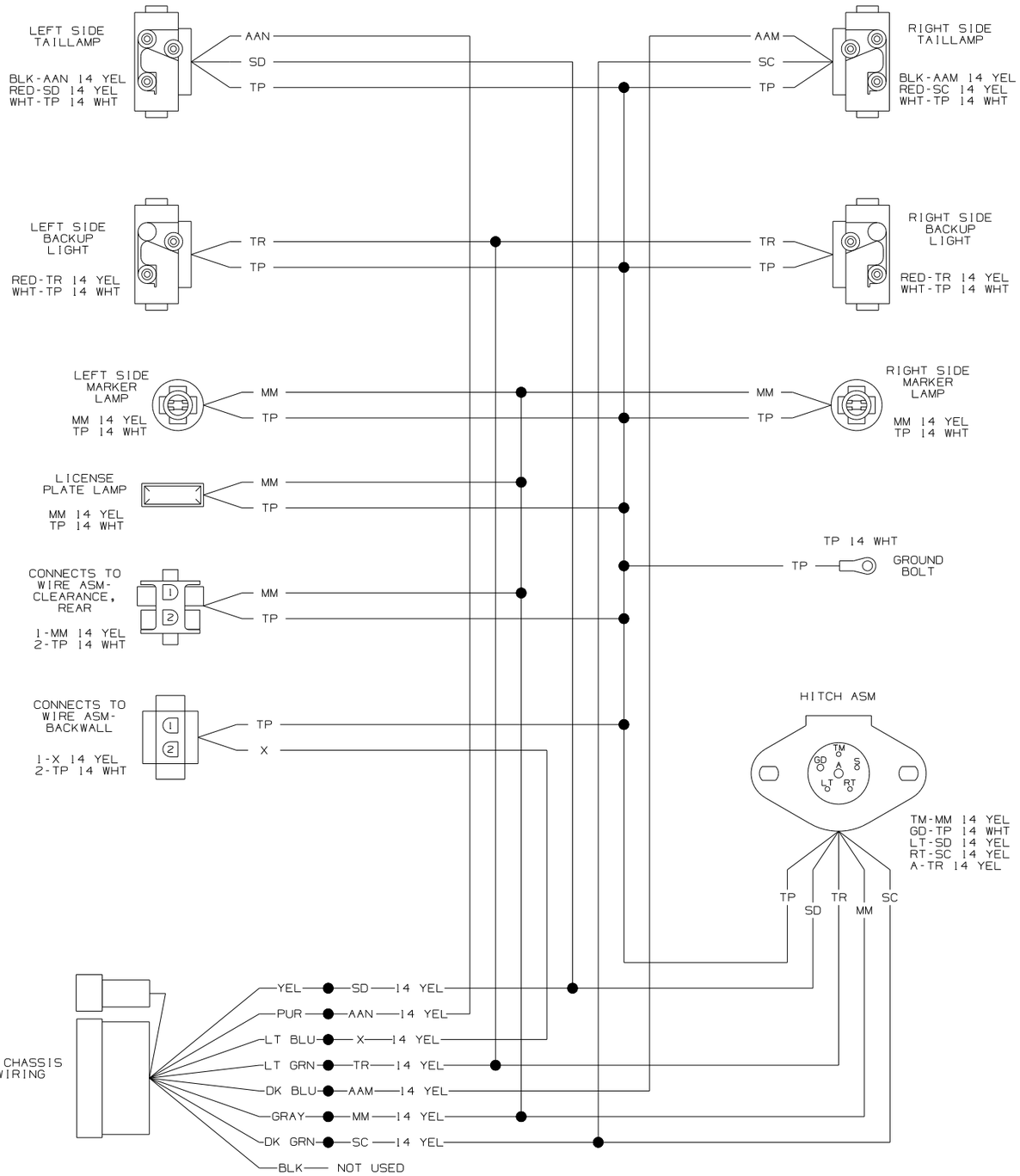

WIRING DIAGRAM-TAILLAMPS
(WIRE ASM 132730-07-000 REV.P)
(WORKHORSE CHASSIS ONLY)

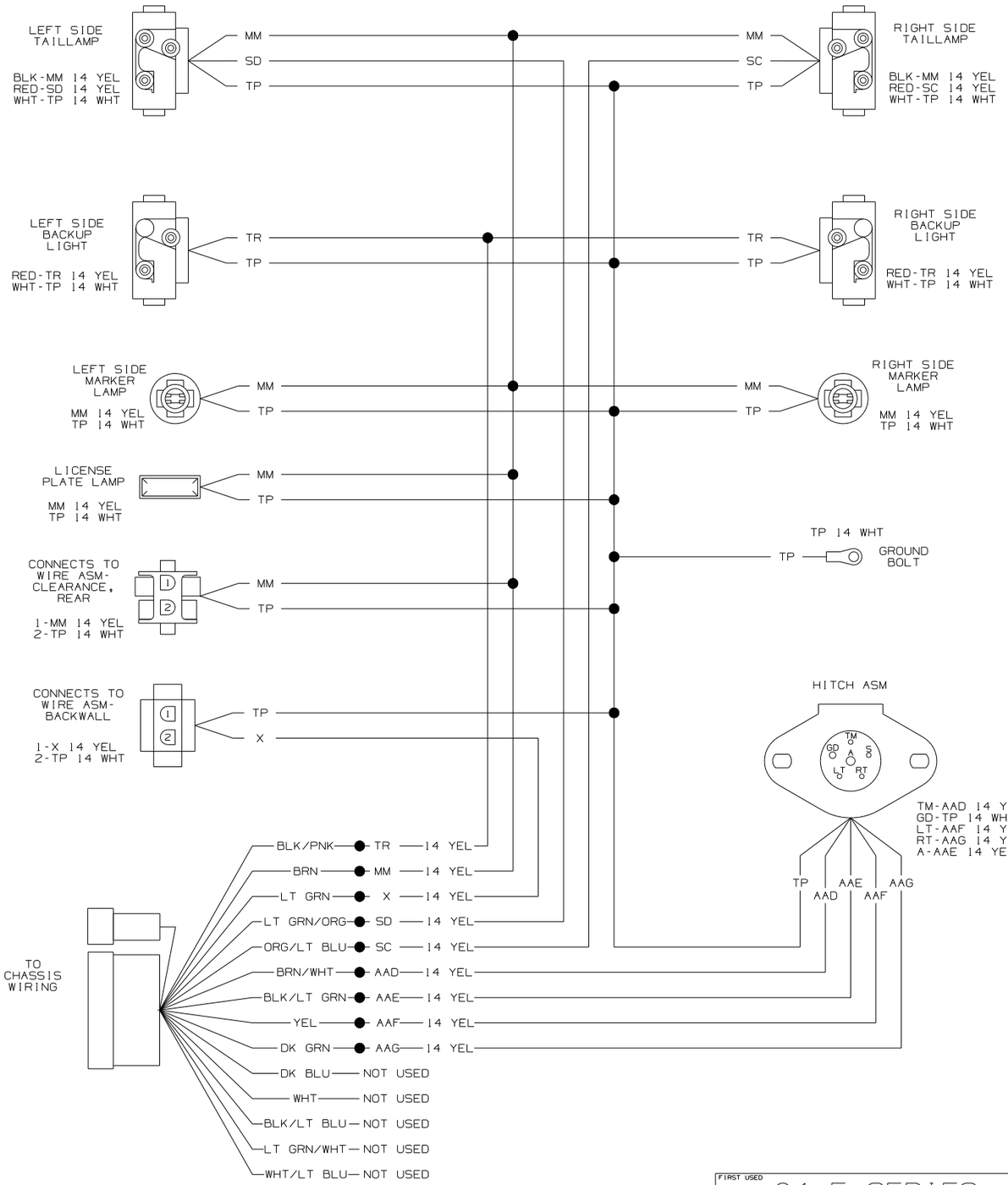

WIRING DIAGRAM-TAIL LAMPS
(WIRE ASM 132730-06-000 REV.P)
(FORD CHASSIS ONLY)

FIRST USED
04 F-SERIES
DO NOT SCALE DRAWING
TITLE:
WIRING DIAGRAM-AUTO LAMPS
SHEET 4
PART NO 144953

DWG NO 144953

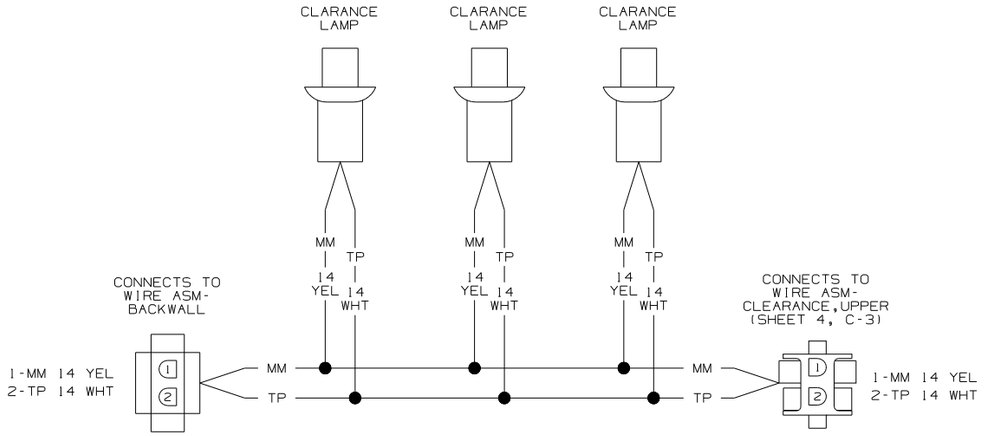

WIRING DIAGRAM-CLEARANCE,UPPER
(WIRE ASM 123176-01-000 REV.C)

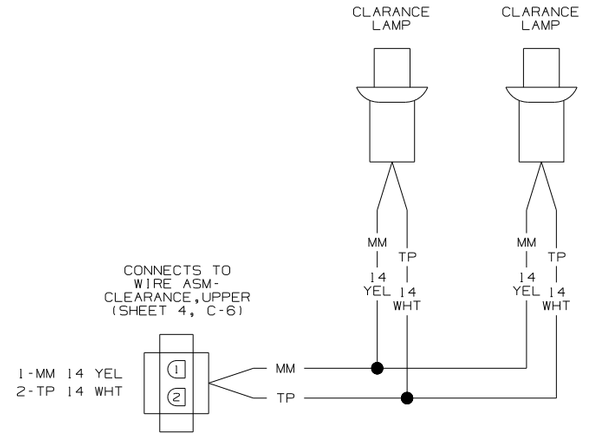

WIRING DIAGRAM-CLEARANCE,UPPER
(WIRE ASM 123176-02-000 REV.C)

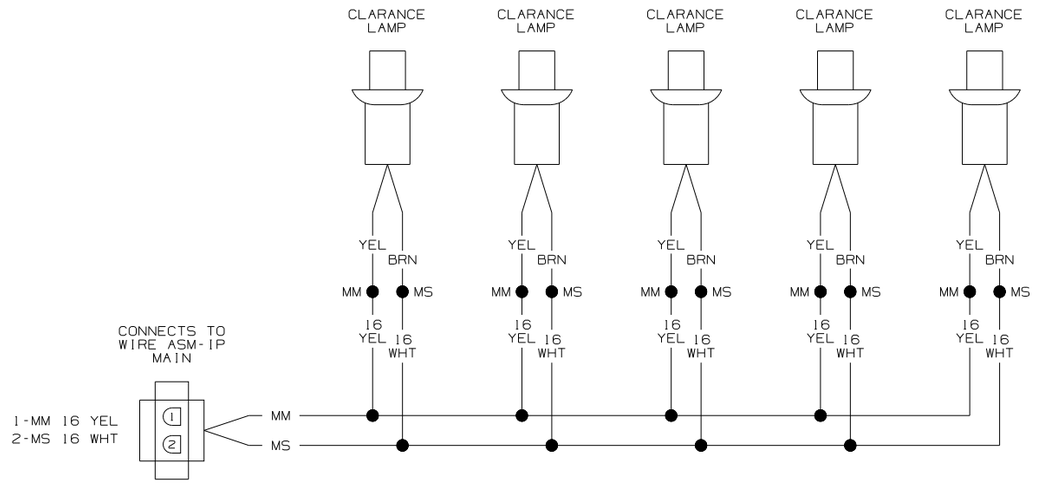

WIRING DIAGRAM-CLEARANCE LAMPS
(WIRE ASM 126486-01-000 REV.E)

FIRST USED	04 F-SERIES
	DO NOT SCALE DRAWING
TITLE:	WIRING DIAGRAM-AUTO LAMPS
SHEET 5	PART NO 144953

DOME LAMP
MK 14 YEL
MN 14 WHT

DOOR DOME LAMP SWITCH
UM 14 WHT
MN 14 WHT

CONNECTS TO EVAPORATOR A/C PRESSURE SWITCH
IFU 14 YEL
IFU 14 YEL
FU 14 YEL
PUR
RED/ TAN

MU 14 WHT
FR 14 YEL
CB PREP OPTION PROVISION

CONNECTS TO HEATER A/C CONTROLS
1-
2-
3-
4-XA 10 YEL
5-G 10 YEL
6-WY 10 WHT

CONNECTS TO FUSE PANEL (UNDER DASH POD)
MF 14 YEL
XA 10 YEL
G 10 YEL
DDB 14 YEL
TB 12 YEL
TB 12 YEL
BY 10 YEL
BY 10 YEL
LS 12 YEL
CM 10 YEL
WJ 12 YEL
WP 10 YEL
WP 10 YEL
BY 10 YEL
BY 10 YEL

PASS THROUGH STUD (LOCATED IN FIREWALL ON DRIVERS SIDE)
BY

CONNECTS TO FORD WIRE ASM-MAIN
FU 14 YEL
KE 14 YEL
MM 14 YEL
MN 14 WHT
ML 16 YEL
MK 14 YEL
LD 14 YEL
FR 14 YEL
TR 14 YEL

GRN/ RED	BRN/ LT BLU	RED/ PNK	GRN/ ORN	BLK/ LT BLU	LT GRN	BLK/ PNK	WHT/ PUR	YEL/ BLK	BRN/ RED	LT BLU/ WHT	LT BLU/ RED	ORN/ GRN	BRN	WHT/ BLU	RED/ YEL
PARK BREAK GROUND	WARNING CHIME (SEAT BELT BUCKLE SWITCH)	WARNING CHIME (DOOR JAMB SWITCH)	DOOR AJAR LAMP GROUND	GROUND DURING START	BRAKE LAMP FEED	REVERSE GEAR POWER (BACKUP SWITCH)	ACCESSORY FEED #1 ACC & RUN	RADIO FEED	BATTERY FEED	CIGARETTE LIGHTER FEED	INSTRUMENT PANEL LAMP FEED	INTERIOR LAMP SWITCH GROUND	PARK LAMPS	ACCESSORY FEED #2 RUN ONLY	A/C LOW PRESSURE CUTOUT

TR LD MK ML MM KE WP GRNDS MF DDB WJ GRND MD LS

ANTENNA WARNING LAMP
MU 14 WHT
DDN 14 YEL

ANTENNA REMINDER MODULE
DDN 14 YEL
MU 14 WHT
KE 14 YEL

CIGAR LIGHTER
KF 14 WHT
LS 14 YEL

12V OUTLET
LS 14 YEL
KF 14 WHT

CONNECTS TO INVERTER
CN CM
1-CM 14 YEL
2-CN 10 WHT

CONNECTS TO WIRE ASM-CLEARANCE FRONT
MM MS
1-MM 14 YEL
2-MS 14 WHT

GROUND
DDL GGV MS UM KF WY MC MG MU
UM 16 WHT
MU 14 WHT
MC 16 WHT
KF 12 WHT
DDL 14 WHT
GGV 14 WHT
MS 14 WHT
MG 14 WHT
WY 10 WHT

CONNECTS TO HWH WIRING
KE LD
1-KE 14 YEL
2-
3-LD 14 YEL

CONNECTS TO WIRE ASM-IP,MIRRORS (SHT 5, B-8) (LOCATED IN DRIVERS DOOR)
MD MG MN MK NR PP PR PN NS NN
1-PP 16 YEL
2-PN 16 WHT
3-NR 16 YEL
4-NN 16 YEL
5-
6-PR 16 YEL
7-NS 14 YEL
8-MG 14 WHT
9-MD 14 YEL
10-
11-MK 14 YEL
12-MN 14 WHT

CONNECTS TO LEFT MIRROR
NN NS PN NR MG
1-
2-MG 14 WHT
3-NS 14 YEL
4-NN 16 YEL
5-PN 16 YEL
6-NR 16 YEL

CONNECTS TO RIGHT MIRROR
NS PN PR PP MG
1-
2-MG 14 WHT
3-NS 14 YEL
4-PP 16 YEL
5-PN 16 YEL
6-PR 16 YEL

RELEASE | REV A | DATE | DWG NO 144984
REV | ZONE | REVISION RECORD | DATE | DFTR-ORIG

COPYRIGHT 2002 WINNEBAGO INDUSTRIES, INC.

WINNEBAGO INDUSTRIES

DFTR	ORIG. DATE
CHKR	ALL DIMENSIONS ARE IN MILLIMETERS
P.E.	
W.E.	FIRST USED
DSNR	04 F & G-SERIES

UNSPECIFIED TOLERANCES ARE:
WHOLE DIM (X) :
ONE-PLACE (X.X) :
TWO-PLACE (X.XX) :
ANGLE :
THIRD ANGLE PROJECTION

MATERIAL:

DO NOT SCALE DRAWING

TITLE: WIRING DIAGRAM-AUTO

SHEET 1 OF 5 | PART NO 144984

WIRING DIAGRAM-IP,MAIN,FD
(WIRE ASM 145215-01-000 REV.D)
(FORD CHASSIS ONLY)

F1

CONNECTS TO TV/RADIO SPEAKER SWITCHING RELAY (SHT 5, A-3) (SHT 5, B-2) (LOCATED BEHIND RADIO)

1-DP 14 YEL
2-KF 16 WHT
3-DL 16 YEL
4-DM 16 WHT
5-DJ 16 YEL
6-DK 16 YEL
7-TG 16 YEL
8-TH 16 WHT
9-TJ 16 YEL
10-TK 16 WHT
11-KX 16 YEL
12-LB 16 WHT
13-LA 16 YEL
14-LC 16 WHT
15-

DL DJ DK DM KF LA LB LC KX TK TJ TH TG DP

SPEAKER SELECT SWITCH

DP 14 YEL

DP

1-DP 14 YEL
2-CP 12 WHT
3-TG 16 YEL
4-TH 16 WHT
5-TJ 16 YEL
6-TK 16 WHT

DP TG TH TJ TK CP

CONNECTS TO INVERTER GROUND LUB

CP 12 WHT

1-CCS 16 YEL
2-

CP

CONNECTS TO DELUXE SOUND POWER FILTER

CCS

1-GT 16 YEL
2-MU 14 WHT

MU GT

CONNECTS TO WIRE ASM-REAR MONITOR

1-KE 14 YEL
2-MG 14 WHT
3-TR 14 YEL

KE MG TR

CONNECTS TO DIGITAL COMPASS

1-MK 14 YEL
2-LD 14 YEL
3-MM 14 YEL
4-MC 16 WHT

MC MM MK LD

CONNECTS TO WIRE ASM-AUX FANS (SHT 4, D-2) (LOCATED UNDER DASH POD)

1-
2-
3-LD 14 YEL

LD

GT 16 YEL
WN 10 YEL

CD PLAYER HIDEAWAY UNIT

GT WN

DL
DJ
LD
MK
ML
MM
KE
DK
WP
DM
GRNDS
TR
NA
LS
NH
DDC
GT
WN

TR
LD
MK
ML
MM
KE
WP
TB
GRNDS
MF
DDB
WJ
GRND
MD
LS

LA LB LC KX MU WN CCS KY AT AS KW KW AS AT KY

1-WN 10 YEL
2-LC 16 WHT
3-LA 16 YEL
4-CCS 16 YEL
5-AT 16 WHT
6-KY 16 YEL
7-
8-AS 16 WHT
9-KW 16 YEL
10-MU 14 WHT
11-LB 16 WHT
12-KX 16 YEL

CONNECTS TO RADIO

KW 16 YEL
AS 16 WHT
RIGHT FRONT SPEAKER

AT 16 WHT
KY 16 YEL
LEFT FRONT SPEAKER

MG

BLOWER RELAY GROUND CIRCUIT (YEL/ORG)

MG 14 WHT

TB

BLOWER MOTOR FEED CIRCUIT (BRN/ORG)

TB 12 YEL

NA NG

1-NA 14 YEL
2-NG 16 YEL

CONNECTS TO WIRE ASM-IP,POD (SHT 4, B-4) (LOCATED UNDER DASH POD)

NG MF NH MG

30-NH 14 YEL
85-NG 16 YEL
86-MG 14 WHT
87-MF 14 YEL
87A-

CONNECTS TO FOG LAMPS RELAY (UNDER DASH POD)

WJ MD LD MG

30-WJ 12 YEL
85-LD 14 YEL
86-MG 14 WHT
87-MD 14 YEL
87A-

CONNECTS TO POWER MIRRORS RELAY (UNDER DASH POD)

DDC MG KE DDB

30-DDB 14 YEL
85-KE 14 YEL
86-MG 14 WHT
87-DDC 16 YEL
87A-

CONNECTS TO REAR AUTO HEATER RELAY (UNDER DASH POD)

DWG NO 144984 S1 F2

A1-WP 10 YEL
A2-KS 14 YEL
A3-RA 14 YEL
B1-DJ 16 YEL
B2-DK 16 WHT
B3-DL 16 YEL
B4-DM 16 WHT
C1-KE 14 YEL
C2-RB 14 YEL
D1-LL 16 WHT
D2-LM 16 WHT
D3-LN 16 WHT
D4-LP 16 YEL
E1-MM 14 YEL
E2-BBN 16 YEL
F1-BBM 16 YEL
F2-CCZ 16 YEL
G1-DDA 16 YEL
G2-KKK 16 YEL
G3-LR 14 YEL
G4-NA 14 YEL
H1-KU 14 YEL
H2-NH 14 YEL
J1-AAT 16 YEL
J2-AAU 16 WHT
J3-AAW 16 YEL
J4-AAX 16 WHT
K1-HHE 16 YEL
K2-HHF 16 YEL
K3-KKL 16 YEL

CONNECTS TO
WIRE ASM-CHASSIS
(IN FLOOR ON LEFT SIDE)

LEFT MIRROR
1-RA 14 Y
2-DDL 14 WHT

RIGHT MIRROR
1-RB 14 YEL
2-DDL 14 WHT

WIRE ASM-
GPS ADAPTER
1-MK 14 YEL
2-GGV 14 WHT
3-LD 14 YEL
4-TR 14 YEL
5-GGW 16 YEL
6-ML 16 YEL

VEHICLE
SPEED
SENSOR
GGW 16 YEL

BATTERY
BOOST
SWITCH
1-LS 12 YEL
2-LR 14 YEL
3-DDC 14 YEL
4-
5-
6-
7-
8-

WIRE ASM-
IP,MIRROR
1-HHK 16 YEL
2-HHL 16 YEL
3-HHM 16 YEL
4-HHN 16 YEL
5-
6-MU 14 WHT

DRIVER
SUNVISOR
HHK 16 YEL
HHL 16 YEL

PASSENGER
SUNVISOR
HHM 16 YEL
HHN 16 YEL

AAT AAU AAW AAX LP LM LL LN BBN BBM KKK DDA CCY HHE HHF KKL KU KS NA NH RA RB DM WP DK KE MM LR DJ DL

RA DDL
RB DDL
TR ML MK LD GGV GGW
GGW
LR DDC LS

DL
DJ
LD
MK
ML
MM
KE
DK
WP
DM
GRNDS
TR
NA
LS
NH
DDC
GT
WN

MU HHN HHM HHL HHK
HHK HHL
HHM HHN

MU HHN HHM KF LS MK HA

1-MK 14 YEL
2-MU 14 WHT
3-LS 14 YEL
4-KF 14 WHT
5-HHM 16 YEL
6-HHN 16 YEL
7-HA 14 YEL
8-
9-

WIRE ASM-
SIDEWALL,FRONT

HA MU
MK 14 YEL
HA 14 YEL
MAP
LAMP SWITCH

HA AAW

AAT AAU AAW AAX

1-AAT 16 YEL
2-AAU 16 WHT
3-AAW 16 YEL
4-AAX 16 WHT

CONNECTS TO
WIRE ASM-AMPLIFIER,MTS

BBN BBM KKK DDA CCY HHE HHF KKL CCZ DR DU

CONNECTS TO
HWH WIRING
(SHT 4, B-2)
(LOCATED UNDER
LEFT DASH)

1-DR 16 YEL
2-DU 16 YEL
3-CCZ 16 YEL
4-BBM 16 YEL
5-BBN 16 YEL
6-KKK 16 YEL
7-HHE 16 YEL
8-HHF 16 YEL
9-KKL 16 YEL
10-
11-
12-
13-DDA 16 YEL
14-CCY 16 YEL
15-

DU DR CCZ CCY DDA DDA

1-DDA 16 YEL
2-CCY 16 YEL
3-DDA 16 YEL
4-DR 16 YEL
5-CCZ 16 YEL
6-DU 16 YEL
7-
8-

LP LM LL LN KU KS MC MK ML LS DDC LD GT WN

1-GT 16 YEL
2-MK 14 YEL
3-LP 16 YEL
4-LD 14 YEL
5-LS 12 YEL
6-LM 16 WHT
7-WN 10 YEL
8-LL 16 WHT
9-LN 16 WHT
10-KU 14 YEL
11-DDC 16 YEL
12-KS 14 YEL
13-
14-MC 16 WHT
15-ML 16 YEL

CONNECTS TO
WIRE ASM-IP,POD
(SHT 4, C-8)
(LOCATED UNDER
DASH POD)

3 NOT A SPLICE POINT. INDICATES ENTRY TO WIRE HARNESS.

2 GROUNDS ARE SHOWN AS A SINGLE LINE FOR EASE IN TRACING. EACH GROUND WIRE IS SEPARATE FROM GROUND BARE OR STUD TO HOUSING OR DEVICES INCLUDED ON THAT PARTICULAR GROUND PATH.

1 SEE MANUFACTURER'S DIAGRAM FOR ADDITIONAL INFORMATION.

NOTES:

DWG NO 144984 S1 F3

DWG NO 144984

MAP LAMP SWITCH
MK 14 YEL
HA 14 YEL

MAP LAMP
HA 14 YEL
MU 14 WHT

DOME LAMP
CCU 16 YEL
MN 14 WHT

DOOR DOME LAMP SWITCH
UM 16 WHT
MN 14 WHT

MU 14 WHT
LD 14 YEL
CB PREP OPTION PROVISION

CONNECTS TO HEATER A/C CONTROLS
1-
2-
3-
4-XA 10 YEL
5-G 10 YEL
6-WY 10 WHT

CONNECTS TO FUSE PANEL (UNDER DASH POD) 1
MF 14 YEL
BY 10 YEL
LS 12 YEL
CM 10 YEL
WJ 12 YEL
WP 10 YEL
WP 10 YEL
BY 10 YEL
BY 10 YEL

PASS THROUGH STUD (LOCATED IN FIREWALL ON DRIVERS SIDE)
BY 10 YEL

CONNECTS TO WH I/P CONVENIENCE CENTER 1
A-G 10 YEL
B-
C7-KE 14 YEL
C8-
D1-ML 16 YEL
D2-MM 14 YEL
D3-TR 14 YEL
D4-
D5-
D6-
D7-MN 14 WHT
D8-CCU 16 YEL
E1-LD 14 YEL
E2-
E3-MK 14 YEL
E4-
E5-
E6-XA 10 YEL

TR
LD
MK
ML
MM
KE
WP
GRNDS
MF
GRNDS
CM
WJ
MD
LS

MU
DDN
DDN
MU
KE
KF
LS
LS
KF

ANTENNA WARNING LAMP
MU 14 WHT
DDN 16 YEL

ANTENNA REMINDER MODULE
DDN 16 YEL
MU 14 WHT
KE 14 YEL

CIGAR LIGHTER
KF 12 WHT
LS 12 YEL

12V OUTLET
LS 12 YEL
KF 12 WHT

MM MS
1-MM 14 YEL
2-MS 14 WHT
CONNECTS TO WIRE ASM-CLEARANCE FRONT

DDL CP CN MS UM KF WY MC MG MU GGV
GROUND
MS 14 WHT
UM 16 WHT MG 14 WHT
MU 14 WHT WY 10 WHT
MC 16 WHT DDL 14 WHT
KF 12 WHT GGV 14 WHT

KE LD
1-KE 14 YEL
2-
3-LD 14 YEL
CONNECTS TO HWH WIRING

MD MG MN MK NR PP PR NS NN
1-PP 16 YEL
2-PN 16 WHT
3-NR 16 YEL
4-NN 16 YEL
5-
6-PR 16 YEL
7-NS 14 YEL
8-MG 14 WHT
9-MD 14 YEL
10-
11-MK 14 YEL
12-MN 14 WHT
CONNECTS TO WIRE ASM-IP,MIRRORS (SHT 5, B-8) (LOCATED IN DRIVERS DOOR)

NN NS NR MG
1-
2-MG 14 WHT
3-NS 14 YEL
4-NN 16 YEL
5-PN 16 WHT
6-NR 16 YEL
CONNECTS TO LEFT MIRROR

NS PN PR MG
1-
2-MG 14 WHT
3-NS 14 YEL
4-PP 16 YEL
5-PN 16 WHT
6-PR 16 YEL
CONNECTS TO RIGHT MIRROR

WIRING DIAGRAM-IP,MAIN,WH
(WIRE ASM 145216-01-000 REV.F)
(WORKHORSE CHASSIS ONLY)

FIRST USED 04 F & G-SERIES
DO NOT SCALE DRAWING
TITLE: WIRING DIAGRAM-AUTO
F1 SHEET 2 PART NO 144984

CONNECTS TO
TV/RADIO SPEAKER
SWITCHING RELAY
(SHT 5, A-3)
(SHT 5, B-2)
(LOCATED BEHIND RADIO)

1-DP 14 YEL
2-KF 12 WHT
3-DL 16 YEL
4-DM 16 WHT
5-DJ 16 YEL
6-DK 16 WHT
7-TG 16 YEL
8-TH 16 WHT
9-TJ 16 YEL
10-TK 16 WHT
11-KX 16 YEL
12-LB 16 WHT
13-LA 16 YEL
14-LC 16 WHT
15-

SPEAKER
SELECT
SWITCH

DP 14 YEL

1-DP 14 YEL
2-CP 12 WHT
3-TG 16 YEL
4-TH 16 WHT
5-TJ 16 YEL
6-TK 16 WHT

DL DJ DK DM KF LA LB LC KX TK TJ TH TG DP

DP TG TH TJ TK CP

DP

CONNECTS TO
DELUXE SOUND
POWER FILTER

1-CCS 16 YEL
2-

CCS

1-GT 16 YEL
2-MU 14 WHT

MU GT

CONNECTS TO
WIRE ASM-REAR MONITOR

1-KE 14 YEL
2-MG 14 WHT
3-TR 14 YEL

KE MG TR

CONNECTS TO
DIGITAL COMPASS

1-MK 14 YEL
2-LD 14 YEL
3-MM 14 YEL
4-MC 16 WHT

MC MM MK LD

CONNECTS TO
WIRE ASM-AUX FANS
(SHT 4, D-2)
(LOCATED UNDER
DASH POD)

1-
2-
3-LD 14 YEL

LD

GT 16 YEL
WN 16 YEL

CD PLAYER
HIDEAWAY UNIT

WN GT

DL
DJ
LD
MK
ML
TR
MM
KE
DK
WP
DM
GRNDS
NH
NA
LS
HA
GT
WN

TR
LD
MK
ML
MM
KE
WP
GRNDS
MF
GRNDS
CM
WJ
MD
LS

CP
CP 12 WHT

CONNECTS TO
INVERTER
GROUND LUB

LA LB LC KX MU WN CCS KY AT AS KW

1-WN 16 YEL
2-LC 16 WHT
3-LA 16 YEL
4-CCS 16 YEL
5-AT 16 WHT
6-KY 16 YEL
7-
8-AS 16 WHT
9-KW 16 YEL
10-MU 14 WHT
11-LB 16 WHT
12-KX 16 YEL

CONNECTS TO
RADIO

KW AS

KW 16 YEL
AS 16 WHT

RIGHT FRONT
SPEAKER

AT KY

AT 16 WHT
KY 16 YEL

LEFT FRONT
SPEAKER

NA NG

1-NA 14 YEL
2-NG 16 YEL

CONNECTS TO
WIRE ASM-IP,POD
(SHT 4, B-4)
(LOCATED UNDER
DASH POD)

NG NH MF MG

30-NH 14 YEL
85-NG 16 YEL
86-MG 14 WHT
87-MF 14 YEL
87A-

CONNECTS TO
FOG LAMPS
RELAY
(UNDER DASH POD)

WJ MG MD LD

30-WJ 12 YEL
85-LD 14 YEL
86-MG 14 WHT
87-MD 14 YEL
87A-

CONNECTS TO
POWER MIRRORS
RELAY
(UNDER DASH POD)

CN CM

1-CM 10 YEL
2-CN 10 WHT

CONNECTS TO
INVERTER

DWG NO 144984 S2 F2

CONNECTS TO
WIRE ASM-CHASSIS
(IN FLOOR ON LEFT SIDE)

A1-WP 10 YEL
A2-KS 14 YEL
A3-RA 14 YEL
B1-DJ 16 YEL
B2-DK 16 WHT
B3-DL 16 YEL
B4-DM 16 WHT
C1-KE 14 YEL
C2-RB 14 YEL
D1-LL 16 WHT
D2-LM 16 WHT
D3-LN 16 WHT
D4-LP 16 YEL
E1-MM 14 YEL
E2-BBN 16 YEL
F1-BBM 16 YEL
F2-KKK 16 YEL
G1-DDA 16 YEL
G2-CCY 16 YEL
G3-LR 14 YEL
G4-NA 14 YEL
H1-KU 14 YEL
H2-NH 14 YEL
J1-AAT 16 YEL
J2-AAU 16 WHT
J3-AAW 16 YEL
J4-AAX 16 WHT
K1-HHE 16 YEL
K2-HHF 16 YEL
K3-KKL 16 YEL

LEFT MIRROR
1-RA 14 YEL
2-DDL 14 WHT

RIGHT MIRROR
1-RB 14 YEL
2-DDL 14 WHT

WIRE ASM-
GPS ADAPRER
1-MK 14 YEL
2-GGV 14 WHT
3-LD 14 YEL
4-TR 14 YEL
5-GGW 16 YEL
6-ML 16 YEL

VEHICLE
SPEED
SENSOR
GGW 16 YEL

BATTERY
BOOST
SWITCH
1-LS 12 YEL
2-LR 14 YEL
3-KE 14 YEL
4-
5-
6-
7-
8-

AAT AAW LP LL BBN KKK CCY HHF KU NA RB DM DK MM DL LR
AAU AAX LM LN BBM DDA HHE KKL KS NH RA WP KE DJ LR

RA DDL
RB DDL
TR ML LD GGW
GGW GGW
LR KE LS

WIRE ASM-IP MIRRORS
LOCATED IN
DRIVERS DOOR
(G-SERIES)

1-HHK 16 YEL
2-HHL 16 YEL
3-HHM 16 YEL
4-HHN 16 YEL
5-
6-MU 14 WHT

DRIVER
SUNVISOR
HHK 16 YEL
HHL 16 WHT

PASSENGER
SUNVISOR
HHM 16 YEL
HHN 16 WHT

MU HHN HHL HHK
HHK HHL
HHM HHN

DL
DJ
LD
MK
ML
TR
MM
KE
DK
WP
DM
GRNDS
NH
NA
LS
HA
GT
WN

MU HHN HHM KF LS MK HA

1-MK 14 YEL
2-MU 14 WHT
3-LS 14 YEL
4-KF 14 WHT
5-HHM 16 YEL
6-HHN 16 YEL
7-HA 14 YEL
8-
9-

WIRE ASM-
SIDEWALL,FRONT

AAT AAW
AAU AAX

1-AAT 16 YEL
2-AAU 16 WHT
3-AAW 16 YEL
4-AAX 16 WHT

CONNECTS TO
WIRE ASM-AMPLIFIER,MTS

BBN BBM KKK DDA CCY HHE HHF KKL DU DR CCZ

CONNECTS TO
HWH WIRE ASM
(SHT 4, B-2)
(LOCATED UNDER
LEFT DASH)

1-DR 16 YEL
2-DU 16 YEL
3-CCZ 16 YEL
4-BBM 16 YEL
5-BBN 16 YEL
6-KKK 16 YEL
7-HHE 16 YEL
8-HHF 16 YEL
9-KKL 16 YEL
10-
11-
12-
13-DDA 16 YEL
14-CCY 16 YEL
15-

CCZ DU CCY DDA DDA

1-DDA 16 YEL
2-CCY 16 YEL
3-DDA 16 YEL
4-DR 16 YEL
5-CCZ 16 YEL
6-DU 16 YEL
7-
8-

LP LM LL LN KU KS MC MK ML LS KE LD GT WN

1-GT 16 YEL
2-MK 14 YEL
3-LP 16 YEL
4-LD 14 YEL
5-LS 12 YEL
6-LM 16 WHT
7-WN 16 YEL
8-LL 16 WHT
9-LN 16 WHT
10-KU 14 YEL
11-KE 14 YEL
12-KS 14 YEL
13-
14-MC 16 WHT
15-ML 16 YEL

CONNECTS TO
WIRE ASM-IP,POD
(SHT 4, C-8)
(LOCATED UNDER
DASH POD)

3 NOT A SPLICE POINT. INDICATES ENTRY TO WIRE HARNESS.

2 GROUNDS ARE SHOWN AS A SINGLE LINE FOR EASE IN TRACING. EACH GROUND WIRE IS SEPARATE FROM GROUND BARE OR STUD TO HOUSING OR DEVICES INCLUDED ON THAT PARTICULAR GROUND PATH.

1 SEE MANUFACTURER'S DIAGRAM FOR ADDITIONAL INFORMATION.

NOTES:

DWG NO 144984 S2 F3

DWG NO 144984

DOME LAMP
CCU 16 YEL
MN 14 WHT

DOOR DOME LAMP SWITCH
UM 16 WHT
MN 14 WHT

MU 14 WHT
LD 14 YEL
CB PREP OPTION PROVISION

CONNECTS TO HEATER A/C CONTROLS
1-
2-
3-
4-XA 10 YEL
5-G 10 YEL
6-WY 10 WHT

CONNECTS TO FUSE PANEL (UNDER DASH POD) 1

LS 12 YEL
CM 10 YEL
WJ 12 YEL
WP 10 YEL
WP 10 YEL
BY 10 YEL
BY 10 YEL

PASS THROUGH STUD (LOCATED IN FIREWALL ON DRIVERS SIDE)
BY 10 YEL

GRAY
BLUE
BLACK
CLEAR
GREEN
RED

FUSE PANEL 1
07 02 01 03 04 05
LD 14 YEL
XA 10 YEL
MK 14 YEL
ML 16 YEL
KE 14 YEL
G 10 YEL

GM DOME LAMP CONNECTOR 1
1-MN 14 WHT
2-CCU 16 YEL

GM RUNNING LAMP CIRCUIT (GRY HOUSING) 1
MM 14 YEL

CHEVY WIRING 1
A-TR 14 YEL
B-
C-
A B C

CCU MN UM MN MU LD WY XA G LS CM WJ WP WP BY BY BY G XA LD MK ML KE MN CCU MM TR

TR
LD
MK
ML
MM
KE
WP
WJ
MD
LS

3

MU
DDN
DDN
MU
KE
KF
LS
LS
KF

ANTENNA WARNING LAMP
MU 14 WHT
DDN 16 YEL

ANTENNA REMINDER MODULE
DDN 16 YEL
MU 14 WHT
KE 14 YEL

CIGAR LIGHTER
KF 12 WHT
LS 12 YEL

12V OUTLET
LS 12 YEL
KF 12 WHT

CN CM
1-CM 10 YEL
2-CN 10 WHT
CONNECTS TO INVERTER

MM MS
1-MM 14 YEL
2-MS 14 WHT
CONNECTS TO WIRE ASM-CLEARANCE FRONT

MU MS UM KF WY MC MG
GROUND
UM 16 WHT
MU 14 WHT
MC 16 WHT
KF 12 WHT
MS 14 WHT
MG 14 WHT
WY 10 WHT

KE LD
1-KE 14 YEL
2-
3-LD 14 YEL
CONNECTS TO HWH WIRING

MD MG MN MK NR PP PR PN NS NN
1-PP 16 YEL
2-PN 16 WHT
3-NR 16 YEL
4-NN 16 YEL
5-
6-PR 16 YEL
7-NS 14 YEL
8-MG 14 WHT
9-MD 14 YEL
10-
11-MK 14 YEL
12-MN 14 WHT
CONNECTS TO WIRE ASM-IP,MIRRORS (SHT 5, B-8) (LOCATED IN DRIVERS DOOR)

NN NS NR MG
1-
2-MG 14 WHT
3-NS 14 YEL
4-NN 16 YEL
5-PN 16 WHT
6-NR 16 YEL
CONNECTS TO LEFT MIRROR

NS PN PR MG
1-
2-MG 14 WHT
3-NS 14 YEL
4-PP 16 YEL
5-PN 16 WHT
6-PR 16 YEL
CONNECTS TO RIGHT MIRROR

WIRING DIAGRAM-IP,MAIN,WH,DSL
(WIRE ASM 145217-01-000 REV.E)
(WORKHORSE DIESEL CHASSIS ONLY)

FIRST USED 04 F & G-SERIES
DO NOT SCALE DRAWING
TITLE: WIRING DIAGRAM-AUTO
F1 SHEET 3 PART NO 144984

CONNECTS TO
TV/RADIO SPEAKER
SWITCHING RELAY
(SHT 5, A-3)
(SHT 5, B-2)
(LOCATED BEHIND RADIO)

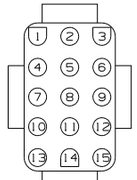

1-DP 14 YEL
2-KF 12 WHT
3-DL 16 YEL
4-DM 16 WHT
5-DJ 16 YEL
6-DK 16 WHT
7-TG 16 YEL
8-TH 16 WHT
9-TJ 16 YEL
10-TK 16 WHT
11-KX 16 YEL
12-LB 16 WHT
13-LA 16 YEL
14-LC 16 WHT
15-

BATTERY
BOOST
SWITCH

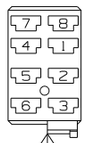

1-LS 12 YEL
2-LR 14 YEL
3-KE 14 YEL
4-
5-
6-
7-
8-

CONNECTS TO
DELUXE SOUND
POWER FILTER

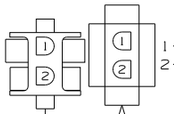

1-CCS 16 YEL
2-
1-GT 16 YEL
2-MU 14 WHT

CONNECTS TO
WIRE ASM-REAR MONITOR

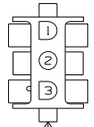

1-KE 14 YEL
2-MG 14 WHT
3-TR 14 YEL

CONNECTS TO
DIGITAL COMPASS

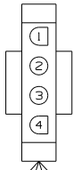

1-MK 14 YEL
2-LD 14 YEL
3-MM 14 YEL
4-MC 16 WHT

CONNECTS TO
WIRE ASM-AUX FANS
(SHT 4, D-2)
(LOCATED UNDER
DASH POD)

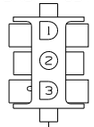

1-
2-
3-LD 14 YEL

GT 16 YEL
WN 16 YEL

CD PLAYER
HIDEAWAY UNIT

DP TJ TK TG TH DL DJ DK DM KF LA LB LC KX

DP
TJ
TK
TG
TH
LD
MK
ML
LR
MM
KE
DK
WP
DM
DL
DJ
LS
GT
WN

TR
LD
MK
ML
MM
KE
WP
WJ
MD
LS

LR KE LS
CCS MU GT
KE MG TR
MC MM MK LD
LD
LD
GT WN

3

LA LB LC KX MU WN CCS KY AT AS KW
KW AS
AT KY

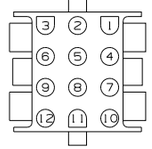

1-WN 16 YEL
2-LC 16 WHT
3-LA 16 YEL
4-CCS 16 YEL
5-AT 16 WHT
6-KY 16 YEL
7-
8-AS 16 WHT
9-KW 16 YEL
10-MU 14 WHT
11-LB 16 WHT
12-KX 16 YEL

CONNECTS TO
RADIO

KW 16 YEL
AS 16 WHT
RIGHT FRONT
SPEAKER

AT 16 WHT
KY 16 YEL
LEFT FRONT
SPEAKER

WJ LD MD MG

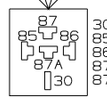

30-WJ 12 YEL
85-LD 14 YEL
86-MG 14 WHT
87-MD 14 YEL
87A-

CONNECTS TO
POWER MIRRORS
RELAY
(UNDER DASH POD)

CP CN

GROUND
STUD

DWG NO 144984 S3 F2

CONNECTS TO WIRE ASM-CHASSIS (IN FLOOR ON LEFT SIDE)

A1-WP 10 YEL
A2-KS 14 YEL
A3-
B1-DJ 16 YEL
B2-DK 16 WHT
B3-DL 16 YEL
B4-DM 16 WHT
C1-KE 14 YEL
C2-
D1-LL 16 WHT
D2-LM 16 WHT
D3-LN 16 WHT
D4-LP 16 YEL
E1-MM 14 YEL
E2-BBN 16 YEL
F1-BBM 16 YEL
F2-CCZ 16 YEL
G1-DDA 16 YEL
G2-CCY 16 YEL
G3-LR 14 YEL
G4-
H1-KU 14 YEL
H2-
J1-AAT 16 YEL
J2-AAU 16 WHT
J3-AAW 16 YEL
J4-AAX 16 WHT
K1-
K2-
K3-

CONNECTS TO INVERTER GROUND LUB

CP 12 WHT

CP

SPEAKER SELECT SWITCH

DP 14 YEL

DP

1-DP 14 YEL
2-CP 12 WHT
3-TJ 14 YEL
4-TK 14 WHT
5-TG 14 YEL
6-TH 14 WHT

CP TH TG TK TJ DP

DP
TJ
TK
TG
TH

AAT AAW LP LL BBN CCZ CCY KS DL WP KE LR
AAU AAX LM LN BBM DDA CCZ KU DJ DM DK MM

LD
MK
ML
LR
MM
KE
DK
WP
DM

3

DL
DJ

LS

GT
WN

AAT AAW
AAU AAX

1-AAT 16 YEL
2-AAU 16 WHT
3-AAW 16 YEL
4-AAX 16 WHT

CONNECTS TO WIRE ASM-AMPLIFIER,MTS

BBN CCZ CCY DU DR
BBM DDA CCZ DR

1-DR 16 YEL
2-DU 16 YEL
3-CCZ 16 YEL
4-BBM 16 YEL
5-BBN 16 YEL
6-KKK 16 YEL
7-
8-
9-
10-
11-
12-
13-DDA 16 YEL
14-CCY 16 YEL
15-

CONNECTS TO HWH WIRE ASM (SHT 4, B-2) (LOCATED UNDER LEFT DASH)

DR CCZ DDA
DU CCY DDA

1-DDA 16 YEL
2-CCY 16 YEL
3-DDY 16 YEL
4-DR 16 YEL
5-CCZ 16 YEL
6-DU 16 YEL
7-
8-

LP LL KU MC ML KE GT
LM LN KS MK LS LD WN

1-GT 16 YEL
2-MK 14 YEL
3-LP 16 YEL
4-LD 14 YEL
5-LS 12 YEL
6-LM 16 WHT
7-WN 16 YEL
8-LL 16 WHT
9-LN 16 WHT
10-KU 14 YEL
11-KE 14 YEL
12-KS 14 YEL
13-
14-MC 16 WHT
15-ML 16 YEL

CONNECTS TO WIRE ASM-IP,POD (SHT 4, C-8) (LOCATED UNDER DASH POD)

3 NOT A SPLICE POINT. INDICATES ENTRY TO WIRE HARNESS.

2 GROUNDS ARE SHOWN AS A SINGLE LINE FOR EASE IN TRACING. EACH GROUND WIRE IS SEPARATE FROM GROUND BARE OR STUD TO HOUSING OR DEVICES INCLUDED ON THAT PARTICULAR GROUND PATH.

1 SEE MANUFACTURER'S DIAGRAM FOR ADDITIONAL INFORMATION.

NOTES:

DWG NO 144984 S3 F3

DWG NO 144984

CONNECTS TO WIRE ASM-IP,MAIN (SHT 1, D-10) (SHT 2, D-10) (SHT 3, D-10) (LOCATED UNDER DASH POD)

1-
2-
3-LD 16 YEL

LD

LE 14 YEL
LF 14 YEL
XW 14 WHT

RIGHT AUX FAN

LE 14 YEL
LF 14 YEL
XW 14 WHT

LEFT AUX FAN

CONNECTS TO WIRE ASM-IP,AUX FAN (SHT 4, C-3) (LOCATED UNDER DASH POD)

1-LD 16 YEL
2-LE 14 YEL
3-LF 14 YEL
4-

LD
LE
LF

GROUND STUD

XW

XW 14 WHT

WIRING DIAGRAM-AUX FANS
(WIRE ASM 132668-01-000 REV.C)

CONNECTS TO WIRE ASM-AUX FANS (SHT 4, D-3) (LOCATED UNDER DASH POD)

1-LD 16 YEL
2-LE 14 YEL
3-LF 14 YEL
4-

LD
LE
LF

CONNECTS TO AUX FANS SWITCH

1-LE 14 YEL
2-LD 16 YEL
3-LF 14 YEL
4-
5-
6-
7-
8-

WIRING DIAGRAM-IP,AUX FANS
(WIRE ASM 132669-01-000 REV.C)

CONNECTS TO GENERATOR SWITCH

1-LM 16 WHT
2-LN 16 WHT
3-LL 16 WHT
4-
5-
6-
7-MC 16 WHT
8-LP 16 YEL

LM LN LL LP MC

CONNECTS TO RADIO POWER SWITCH

1-LD 14 YEL
2-WN 16 YEL
3-LS 12 YEL
4-MK 14 YEL
5-GT 16 YEL
6-LS 12 YEL
7-
8-

LD WN LS LS MK GT

CONNECTS TO HEATER A/C LAMP

1-MC 16 WHT
2-ML 16 YEL

MC ML

CONNECTS TO WIRE ASM-IP,MAIN (SHT 1, A-18) (SHT 2, A-18) (SHT 3, A-18) (LOCATED UNDER DASH POD)

1-GT 16 YEL
2-MK 14 YEL
3-LP 16 YEL
4-LD 14 YEL
5-LS 12 YEL
6-LM 16 WHT
7-WN 16 YEL
8-LL 16 WHT
9-LN 16 WHT
10-KU 14 YEL
11-KE/DDC 14 YEL
12-KS 14 YEL
13-
14-MC 16 WHT
15-ML 16 YEL

LM
LN
LL
LP
MC
LD
WN
LS
MK
GT
ML
KE/DDC
KU
KS

KS KU KE/DDC

1-KS 14 YEL
2-KE/DDC 14 YEL
3-KU 14 YEL
4-
5-
6-
7-
8-

CONNECTS TO REAR AUTO HEATER SWITCH

MC NG NA

1-
2-NA 14 YEL
3-NG 14 WHT
4-
5-
6-
7-MC 16 WHT
8-NG 14 WHT

CONNECTS TO FOG LAMPS SWITCH

NA NG

1-NA 14 YEL
2-NG 14 WHT

CONNECTS TO WIRE ASM-IP,MAIN (SHT 1, A-12) (SHT 2, A-12) (LOCATED UNDER DASH POD)

WIRING DIAGRAM-IP,POD
(WIRE ASM 141615-01-000 REV.A)

FIRST USED
04 F & G-SERIES

DO NOT SCALE DRAWING

TITLE:
WIRING DIAGRAM-AUTO

SHEET 4

PART NO
144984

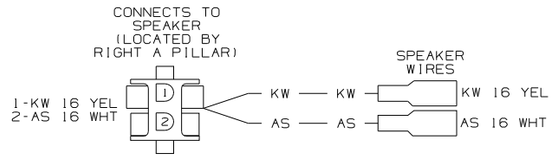

WIRING DIAGRAM-SPEAKER, ADAPTER
(WIRE ASM 124843-02-000 REV.H)

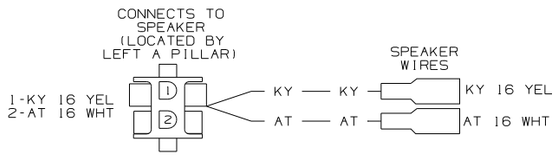

WIRING DIAGRAM-SPEAKER, ADAPTER
(WIRE ASM 124843-03-000 REV.H)

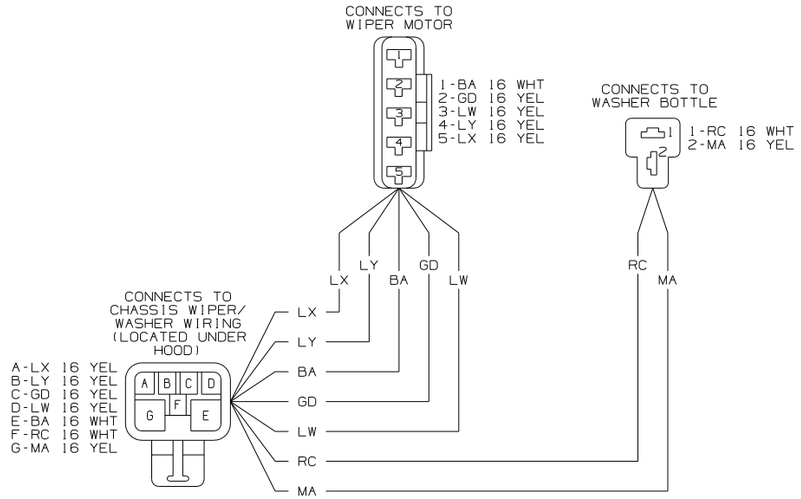

WIRING DIAGRAM-WIPER/WASHER
(WIRE ASM 126030-01-000 REV.D)
(WORKHORSE 22,000#)
(WORKHORSE 20,700#)

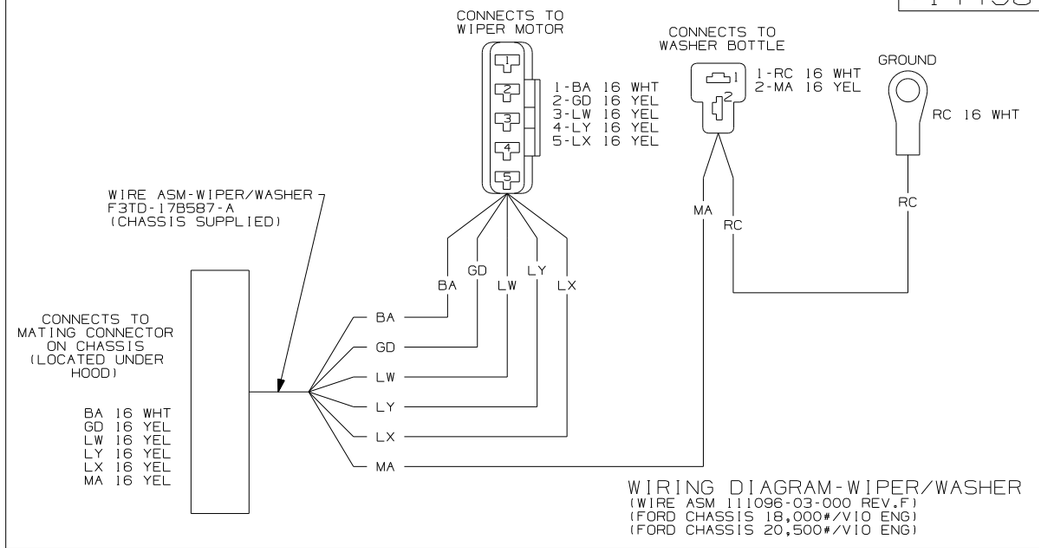

WIRING DIAGRAM-WIPER/WASHER
(WIRE ASM 111096-03-000 REV.F)
(FORD CHASSIS 18,000#/V10 ENG)
(FORD CHASSIS 20,500#/V10 ENG)

WIRING DIAGRAM-OVERDRIVE SWITCH
(WIRE ASM 137626-01-000 REV.E)
(WORKHORSE 20,700#-19.5 TIRE)

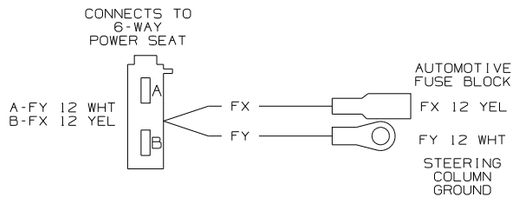

WIRING DIAGRAM-POWER DRIVER SEAT
(WIRE ASM 131279-02-000 REV.G)
(SEAT PED-6 WAY POWER DRIVER)

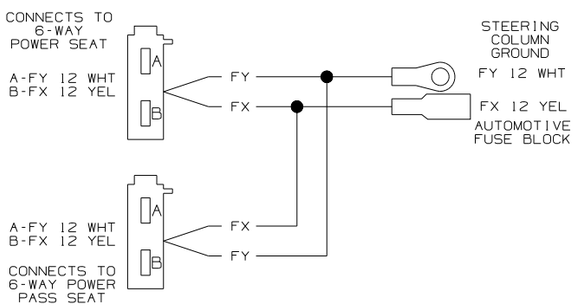

WIRING DIAGRAM-POWER DRIVER SEAT
(WIRE ASM 131279-03-000 REV.G)
(SEAT PED-6 WAY POWER DRIVER & PASS.)

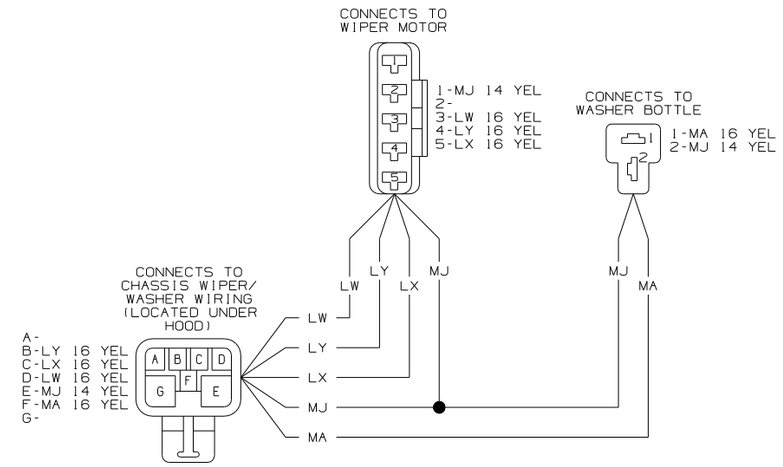

WIRING DIAGRAM-WIPER/WASHER
(WIRE ASM 113134-03-000 REV.H)
(WORKHORSE CHASSIS 18,000#)

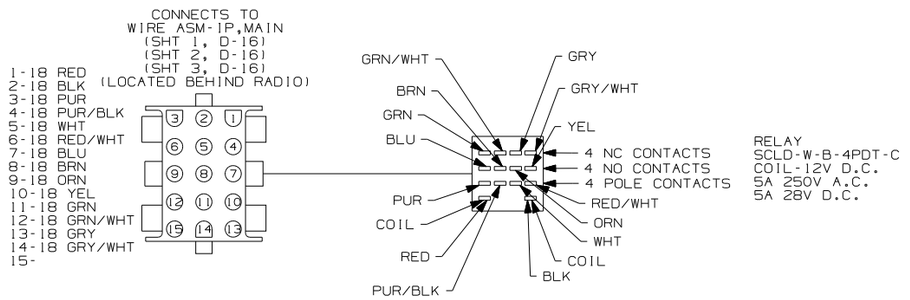

WIRING DIAGRAM-RADIO/TV SPEAKER SWITCH
(WIRE ASM 115539-01-000 REV.B)
(G-SERIES ONLY)

FIRST USED	04 F & G SERIES
	DO NOT SCALE DRAWING
TITLE:	WIRING DIAGRAM-AUTO
SHEET 5	PART NO 144984

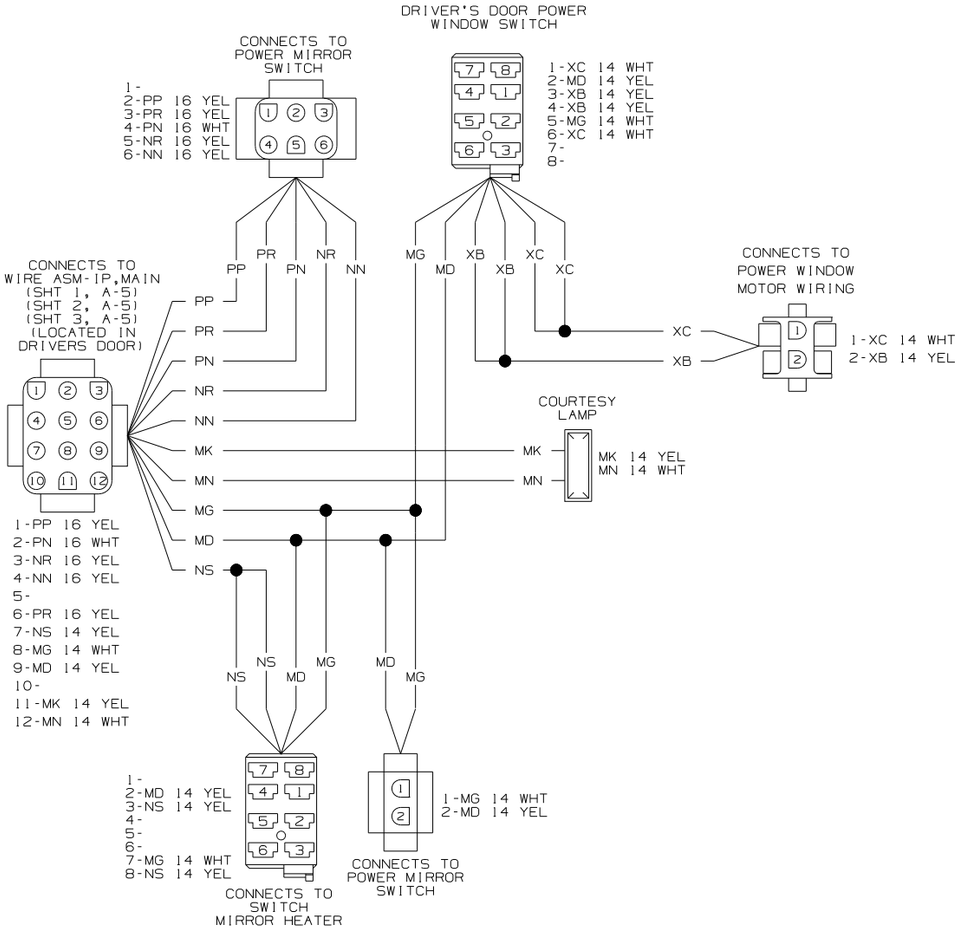

WIRING DIAGRAM-IP POWER,MIRROR
(WIRE ASM 129436-09-000 REV.X)
(F-SERIES)

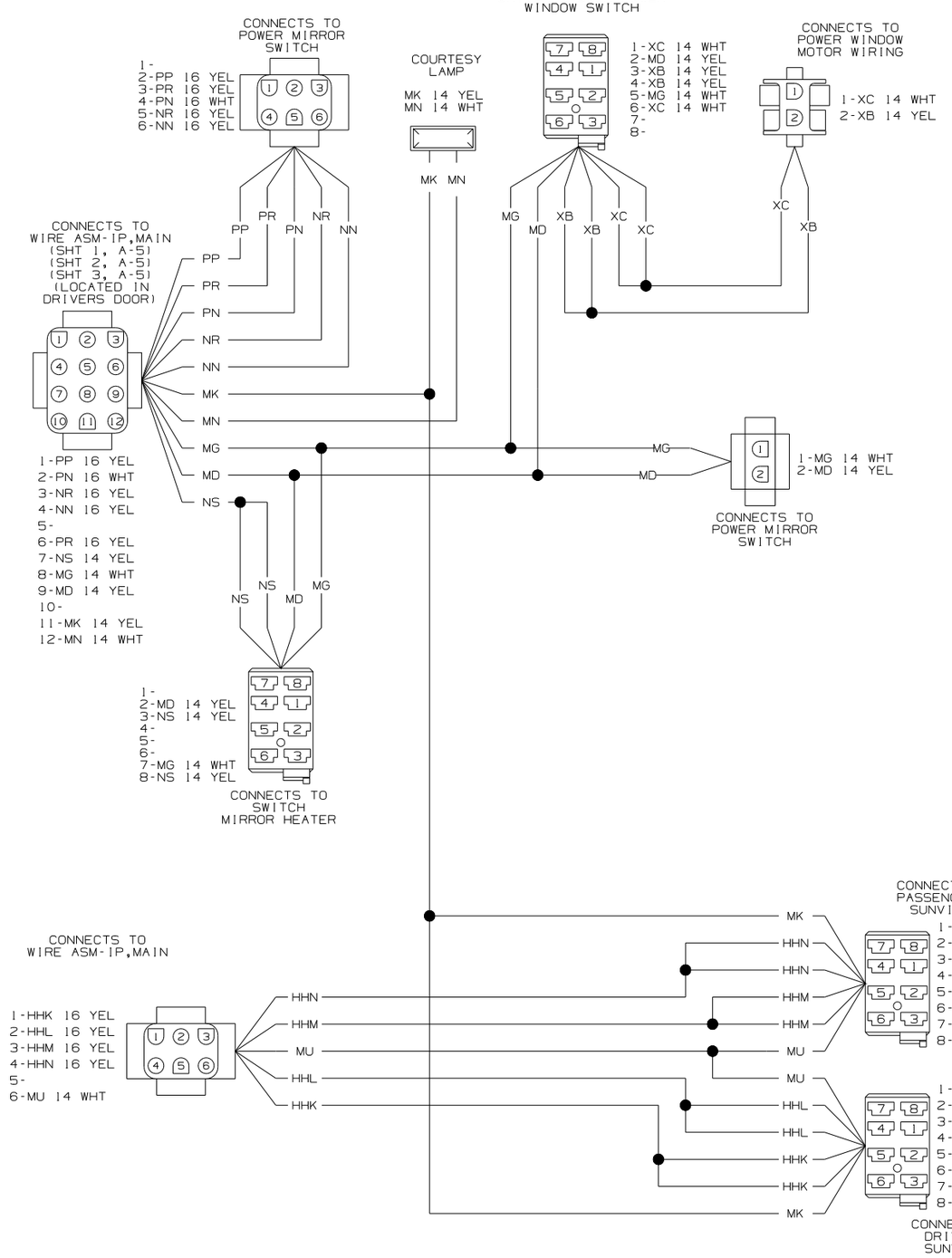

WIRING DIAGRAM-IP POWER,MIRROR
(WIRE ASM 129436-08-000 REV.X)
(G-SERIES)

DWG NO 144984

FIRST USED 04 F & G SERIES

DO NOT SCALE DRAWING

TITLE: WIRING DIAGRAM-AUTO

SHEET 6 PART NO 144984

DRAWING NO.	SHEET	SERIES
145349-01	1,3	G
145349-02	2,3	F

RELEASE	REV A	DATE	DWG NO 145349
REV	ZONE	REVISION RECORD	DATE / DFTR-ORIG

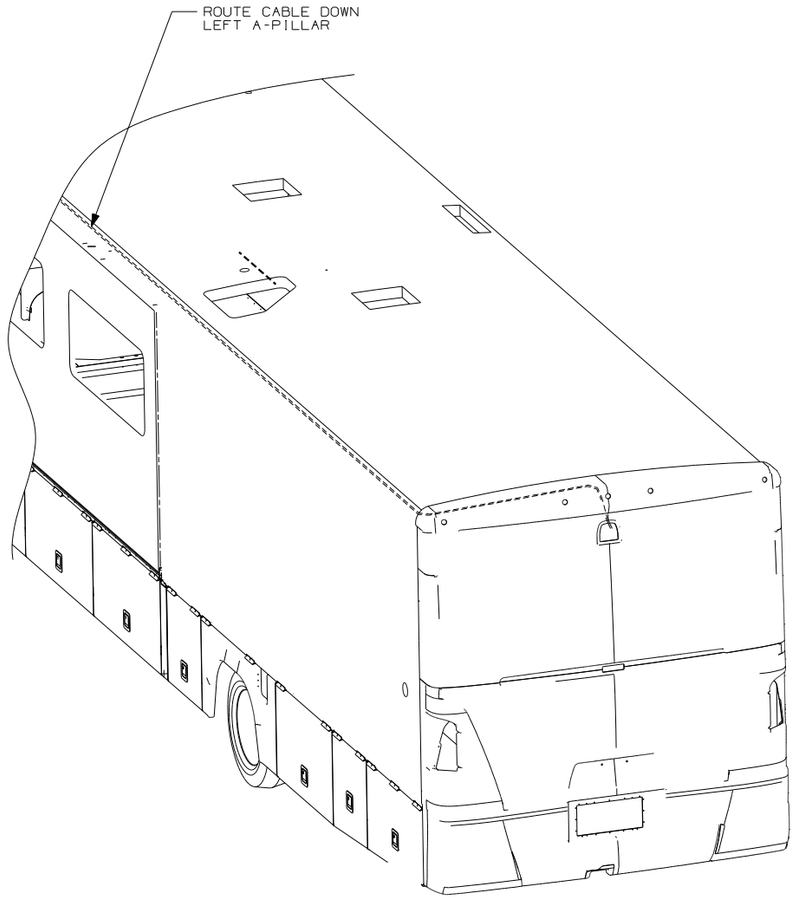

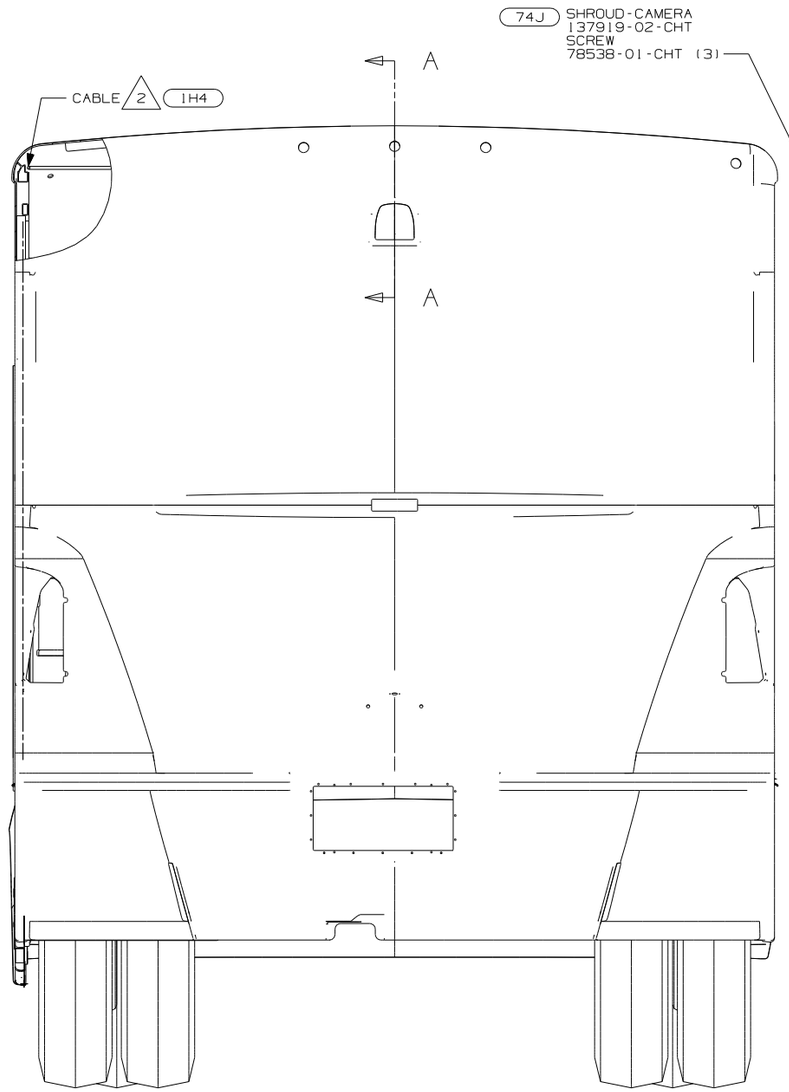

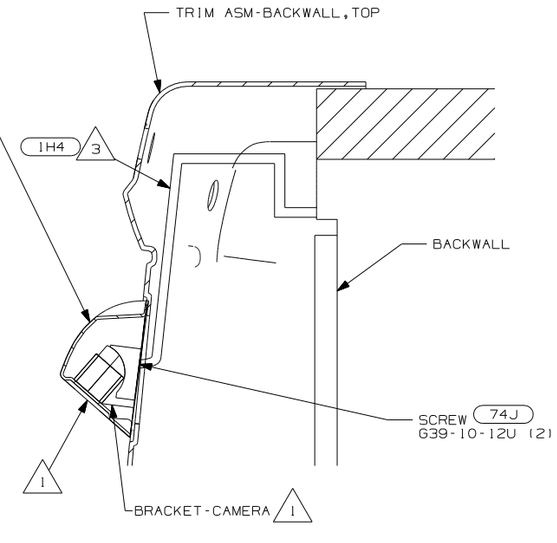

SECTION A-A

74J REARVIEW MONITOR SYSTEM
1H4 REARVIEW MONITOR-WIRE PREP
1A5 REARVIEW MONITOR SYSTEM W/O

3 END STANDARD CABLE IN THIS AREA ON UNITS WITHOUT MONITOR. 1A5 1H4

2 RUN CABLE THRU LEFT HAND COVE TO REAR OF UNIT. STANDARD ON ALL UNITS WITH 1A5 1H4 74J

1 PARTS SUPPLIED WITH CAMERA KIT P/N 143363-05-000. 74J

NOTES:

COPYRIGHT 2003
WINNEBAGO
INDUSTRIES, INC.

DFTR	ORIG. DATE
CHKR	ALL DIMENSIONS ARE IN MILLIMETERS
P.E.	
M.E.	FIRST USED
DSNR	04 F & G-SER

UNSPECIFIED TOLERANCES ARE:
WHOLE DIM (X) : 1
ONE-PLACE (X.X) : 1.5
TWO-PLACE (X.XX) : 0.50
ANGLE : 1°

MATERIAL:

THIRD ANGLE PROJECTION

DO NOT SCALE DRAWING

TITLE: MONITOR INSTL

SHEET 1 OF 3 | PART NO 145349

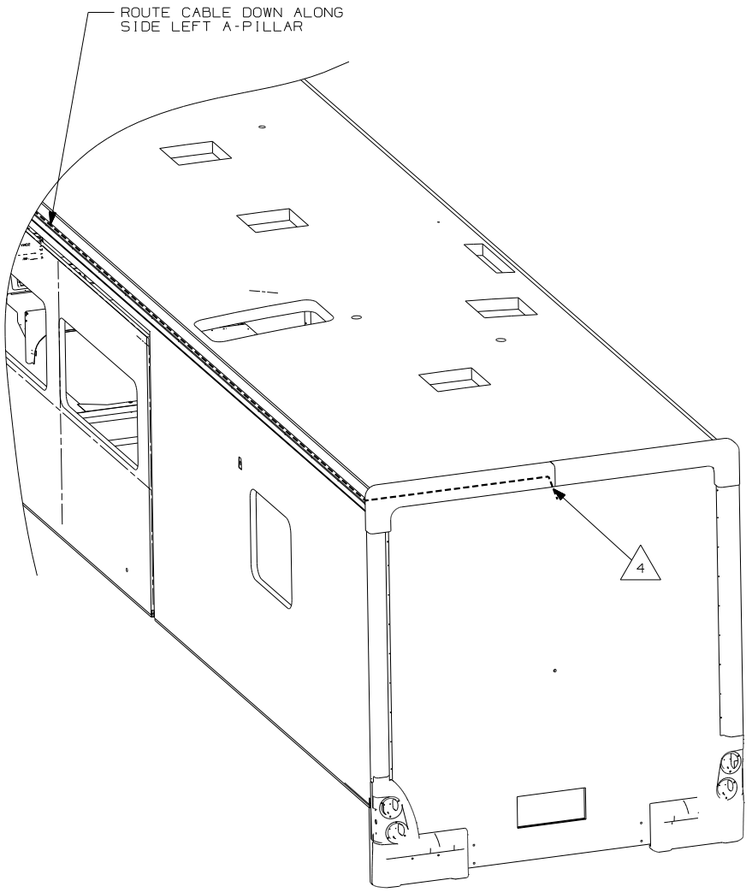

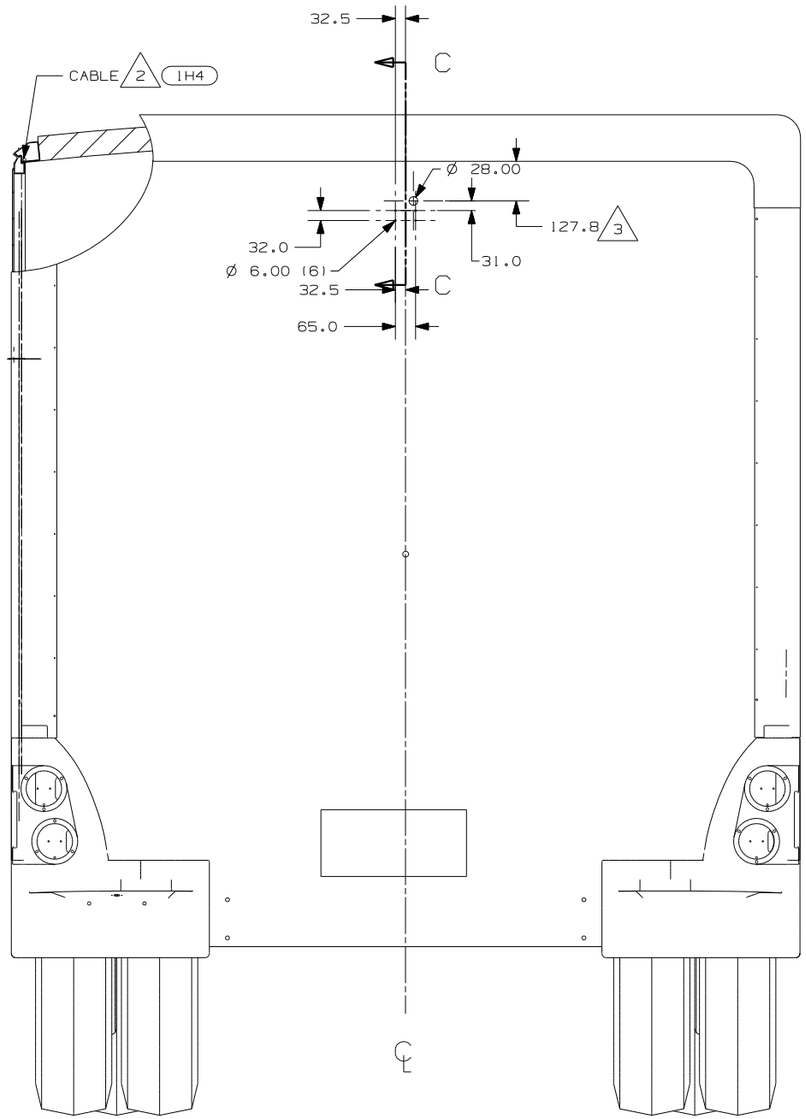

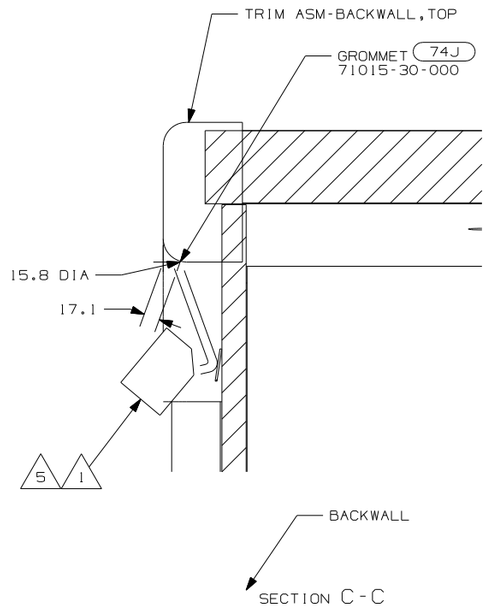

5 PARTS SUPPLIED WITH CAMERA KIT P/N 93040-09-000. (74J) WINNEBAGO

4 END CABLE IN THIS AREA ON UNITS W/O MONITOR.

3 MEASURED FROM BOTTOM BACKWALL TRIM.

2 RUN CABLE THRU LEFT HAND COVE TO REAR OF UNIT.
STANDARD ON ALL UNITS WITH (1A5) (1H4) (74J)

1 PARTS SUPPLIED WITH CAMERA KIT P/N 143363-05-000. (74J) ITASCA

NOTES:

(74J) REARVIEW MONITOR SYSTEM
(1H4) REARVIEW MONITOR-WIRE PREP
(1A5) REARVIEW MONITOR SYSTEM W/O

04 F & G-SER

MONITOR INSTL

2

74J G AND ITASCA F

74J WIRE ASM-REAR MONITOR
143545-01-000

CAMERA CABLE 1 3 1H4

TO WIRE ASM-
IP,MAIN
(LOCATED BEHIND
MONITOR)

MONITOR 2

1 WASHER
77071-01-000 (4)

1 2 WASHER (4)

1 2 LOCK-WASHER (4)

1 74J SCREW
G19-10-08B (4)

CABLE 1H4
143363-03-000 - STANDARD ON ALL G'S AND ITASCA F
93041-01-000 - STANDARD ON ALL WINNEBAGO F

74J WINNEBAGO F

WIRE ASM-SPEAKER 74J
114870-01-000

CAMERA CABLE 1 3 1H4

TO SPEAKER

74J WIRE ASM-REAR MONITOR
96717-04-000

MONITOR 4

TO WIRE ASM-
IP,MAIN
(LOCATED BEHIND
MONITOR)

1 4

WASHER
77071-01-000 (4)

1 4 WASHER (4)

1 4 LOCK-WASHER (4)

SCREW
G19-10-08B (4)

SPEAKER
98819-01-000
GRILLE
93214-01-CHT
SCREW
G13-07-12U (4)
(WINNEBAGO F ONLY)

74J REARVIEW MONITOR SYSTEM
1H4 REARVIEW MONITOR-WIRE PREP
1A5 REARVIEW MONITOR SYSTEM W/O

04 F & G-SER

4 PARTS SUPPLIED WITH MONITOR P/N 93040-10-000. 74J WINNEBAGO F

3 END CABLE IN THIS AREA ON UNITS W/O MONITOR. 1A5 1H4

2 PARTS SUPPLIED WITH MONITOR P/N 143363-01-000. 74J G AND ITASCA F

1 SEE REARVIEW MONITOR KIT INSTALLATION INSTRUCTIONS FOR MORE DETAILS.

NOTES:

MONITOR INSTL

RELEASE	REV	DATE	DWG NO
	A		144614

REV	ZONE	REVISION RECORD	DATE	DFTR·ORIG

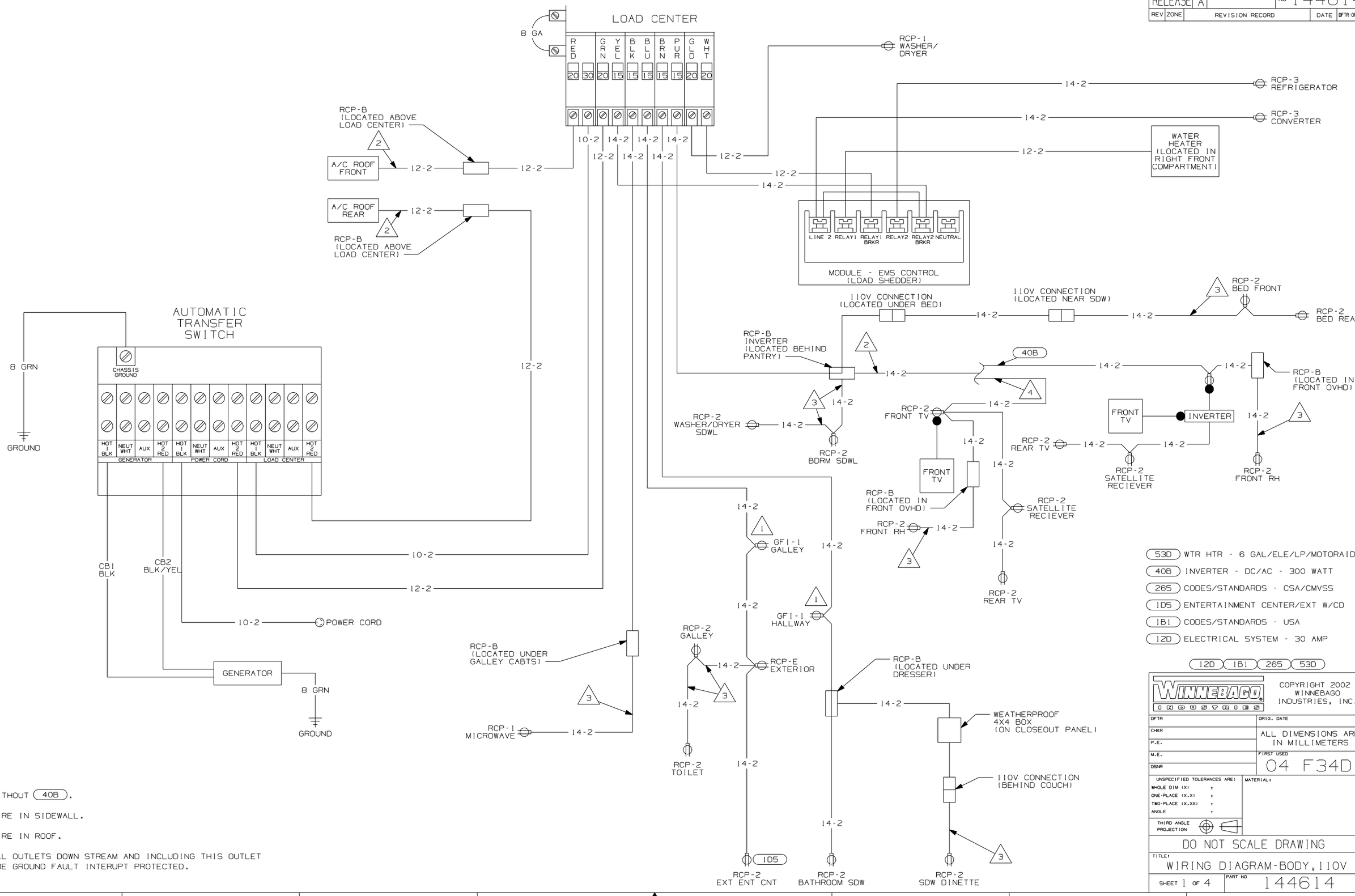

53D WTR HTR - 6 GAL/ELE/LP/MOTORAID

40B INVERTER - DC/AC - 300 WATT

265 CODES/STANDARDS - CSA/CMVSS

1D5 ENTERTAINMENT CENTER/EXT W/CD

1B1 CODES/STANDARDS - USA

12D ELECTRICAL SYSTEM - 30 AMP

12D 1B1 265 53D

4 WITHOUT 40B.

3 WIRE IN SIDEWALL.

2 WIRE IN ROOF.

1 ALL OUTLETS DOWN STREAM AND INCLUDING THIS OUTLET ARE GROUND FAULT INTERUPT PROTECTED.

NOTES:

COPYRIGHT 2002 WINNEBAGO INDUSTRIES, INC.

DFTR	ORIG. DATE
CHKR	ALL DIMENSIONS ARE IN MILLIMETERS
P.E.	
M.E.	FIRST USED 04 F34D
DSNR	

UNSPECIFIED TOLERANCES ARE:
WHOLE DIM (X) :
ONE-PLACE (X.X) :
TWO-PLACE (X.XX) :
ANGLE :

MATERIAL:

THIRD ANGLE PROJECTION

DO NOT SCALE DRAWING

TITLE: WIRING DIAGRAM-BODY, 110V

SHEET 1 OF 4 | PART NO 144614

DWG NO 144614

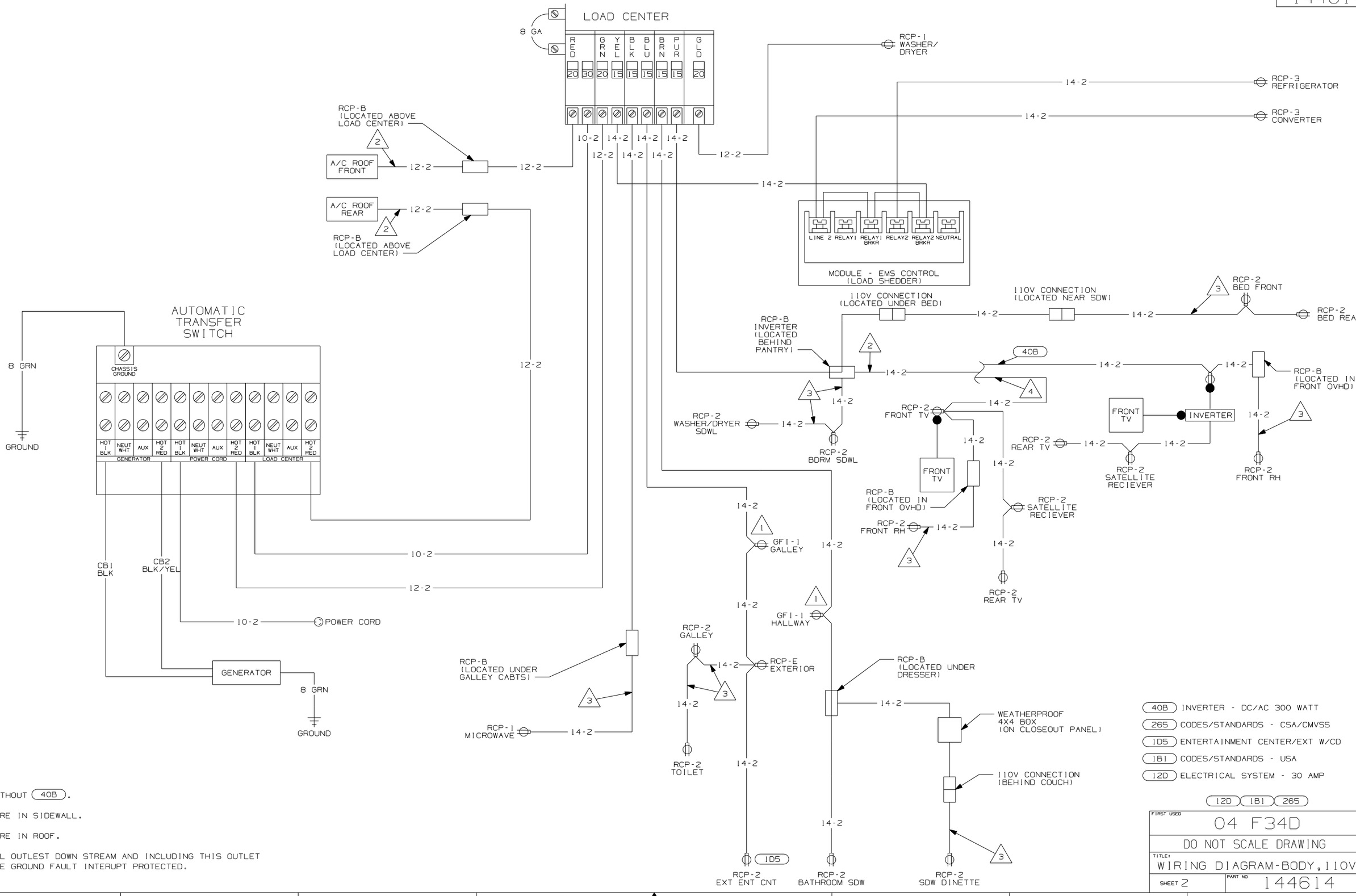

4 WITHOUT (40B).

3 WIRE IN SIDEWALL.

2 WIRE IN ROOF.

1 ALL OUTLEST DOWN STREAM AND INCLUDING THIS OUTLET ARE GROUND FAULT INTERUPT PROTECTED.

NOTES:

(40B) INVERTER - DC/AC 300 WATT

(265) CODES/STANDARDS - CSA/CMVSS

(1D5) ENTERTAINMENT CENTER/EXT W/CD

(1B1) CODES/STANDARDS - USA

(12D) ELECTRICAL SYSTEM - 30 AMP

(12D) (1B1) (265)

FIRST USED	04 F34D
	DO NOT SCALE DRAWING
TITLE:	WIRING DIAGRAM-BODY, 110V
SHEET 2	PART NO 144614

DWG NO 144614

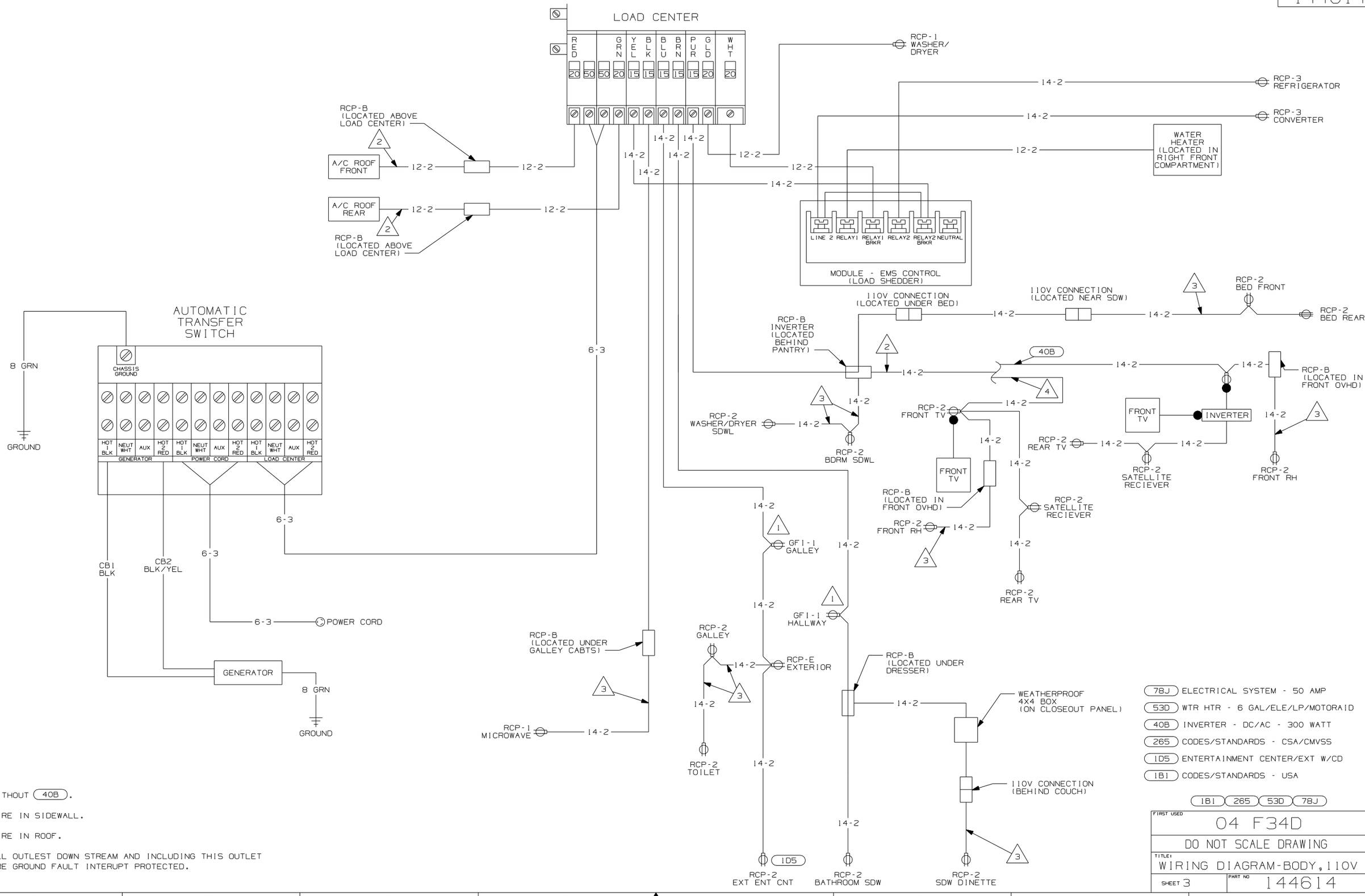

78J ELECTRICAL SYSTEM - 50 AMP
53D WTR HTR - 6 GAL/ELE/LP/MOTORAID
40B INVERTER - DC/AC - 300 WATT
265 CODES/STANDARDS - CSA/CMVSS
1D5 ENTERTAINMENT CENTER/EXT W/CD
1B1 CODES/STANDARDS - USA

1B1 265 53D 78J

4 WITHOUT (40B).
3 WIRE IN SIDEWALL.
2 WIRE IN ROOF.
1 ALL OUTLEST DOWN STREAM AND INCLUDING THIS OUTLET ARE GROUND FAULT INTERUPT PROTECTED.

NOTES:

FIRST USED	04 F34D
	DO NOT SCALE DRAWING
TITLE:	WIRING DIAGRAM-BODY, 110V
SHEET 3	PART NO 144614

DWG NO 144614

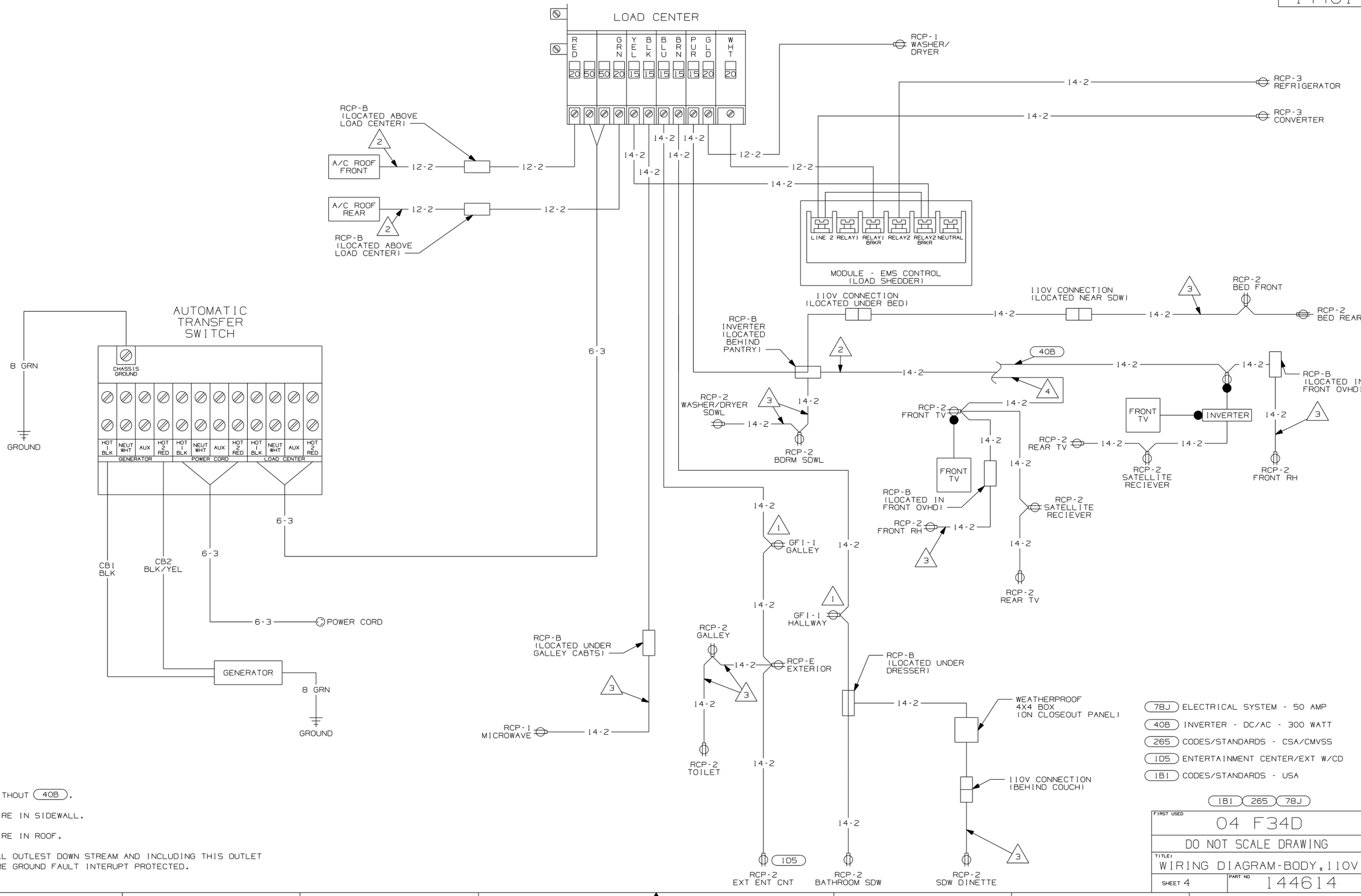

78J ELECTRICAL SYSTEM - 50 AMP
408 INVERTER - DC/AC - 300 WATT
265 CODES/STANDARDS - CSA/CMVSS
1D5 ENTERTAINMENT CENTER/EXT W/CD
1B1 CODES/STANDARDS - USA

4 WITHOUT 408.
3 WIRE IN SIDEWALL.
2 WIRE IN ROOF.
1 ALL OUTLEST DOWN STREAM AND INCLUDING THIS OUTLET ARE GROUND FAULT INTERUPT PROTECTED.

NOTES:

1B1 265 78J

FIRST USED	04 F34D
	DO NOT SCALE DRAWING
TITLE:	WIRING DIAGRAM-BODY, 110V
SHEET 4	PART NO 144614

DRAWING NO.	FEATURE
144613-01	----------
144613-11	(1B1) (12D)
144613-12	(1B1) (78J)
144613-15	(265) (12D)
144613-16	(265) (78J)

RELEASE	REV A	DATE	DWG NO 144613
REV	ZONE	REVISION RECORD	DATE / DFTR-ORIG

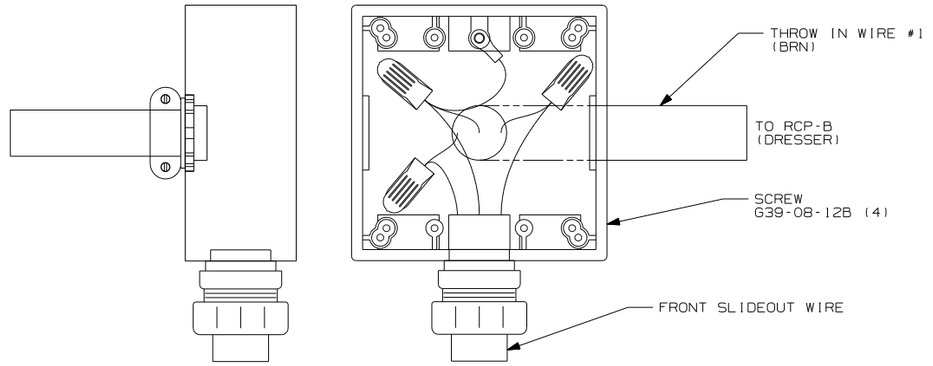

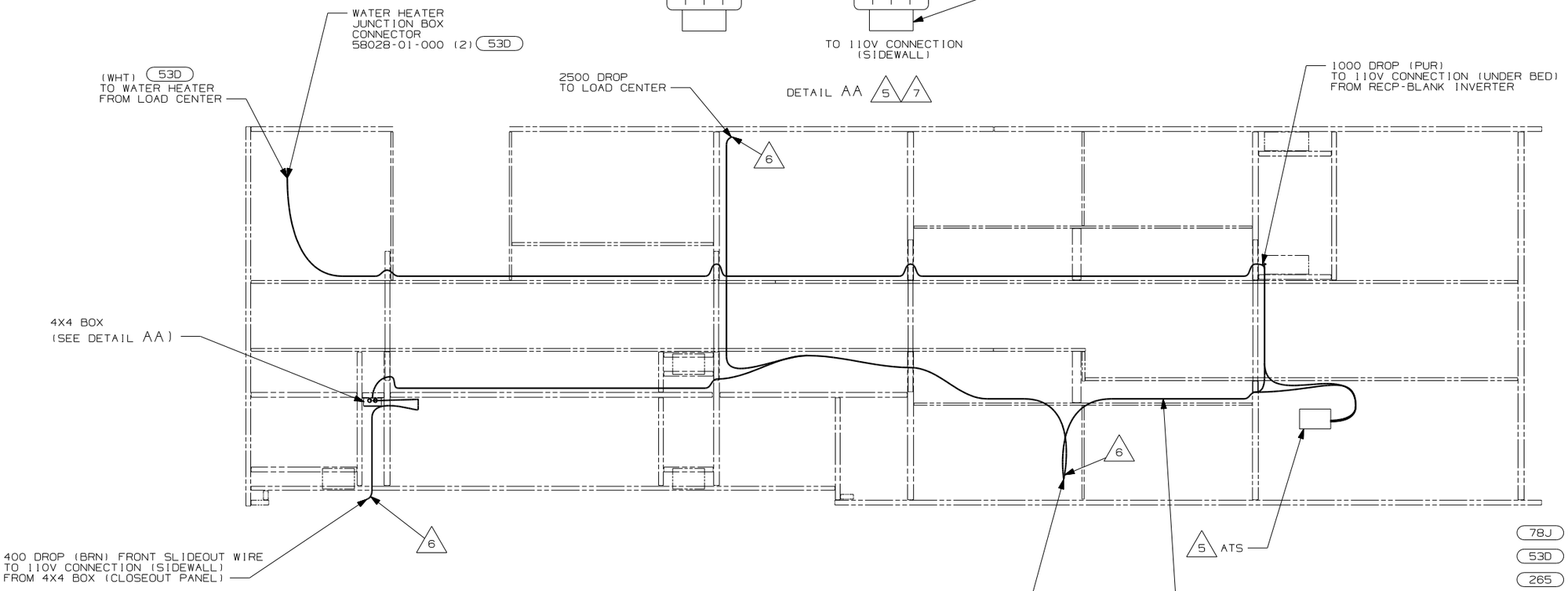

5800 DROP (BRN)
FROM LOAD CENTER
TO GFI-1 (HALLWAY)
1000 DROP (BRN) THROW IN WIRE #1
FROM 4X4 BOX (CLOSEOUT PANEL)
TO RCP-B (DRESSER)
5800 DROP (GLD)
FROM LOAD CENTER
TO RCP-1 (WASHER/DRYER)
3600 LOOP (PUR)
FROM LOAD CENTER
TO RCP-B (INVERTER)
3600 DROP (RED)
FROM LOAD CENTER
TO RCP-B (FRONT A/C)
3600 DROP (GRN) (78J)
FROM LOAD CENTER
TO RCP-B (REAR A/C)
3600 DROP (GRN-2) (12D)
FROM ATS
TO RCP-B (REAR A/C)

(78J) ELECTRICAL SYSTEM - 50 AMP
(53D) WTR HTR-6GAL/ELE/LP/MOTORAID
(265) CODES/STANDARDS - CSA/CMVSS
(1B1) CODES/STANDARDS - USA
(12D) ELECTRICAL SYSTEM - 30 AMP

(12D) (1B1) (265) (78J)

7 MOUNT 4X4 BOX ON CLOSEOUT PANEL OVER HOLE.

6 WIRE PASSES THROUGH FLOOR AT THIS POINT.

5 FOR MORE INFORMATION SEE LOAD CENTER/ATS ASM.

4. FOR MORE INFORMATION SEE WIRING DIAGRAM-BODY,110V.

3. ALL GROUND WIRE TO BE COVERED WITH TUBING 8041-02-000.

2. ALL 110V WIRE TO BE CLAMPED WITH CLAMP 10497-05-000 WITHIN 200MM OF OUTLET BOXES, USE SCREW G67-10-12B.

1. ALL WIRES TO BE SECURED WITH CLAMP 10495-01-000 OR CLIP 80734-01-000 EVERY 600MM. USE SCREW G67-10-12B UNLESS OTHERWISE SPECIFIED.

NOTES:

FOR ELECTRICAL TORQUE SPECIFICATIONS SEE DWG NO. 128783-01-000

(X-X) FOR ELECTRICAL CALLOUTS SEE DWG NO. 121339-01-000

COPYRIGHT 2002 WINNEBAGO INDUSTRIES, INC.

WINNEBAGO INDUSTRIES

DFTR	ORIG. DATE
CHKR	ALL DIMENSIONS ARE IN MILLIMETERS
P.E.	
M.E.	FIRST USED 04 F34D
DSNR	

UNSPECIFIED TOLERANCES ARE: WHOLE DIM (X) : 1; ONE-PLACE (X.X) : 1.5; TWO-PLACE (X.XX) : 0.50; ANGLE : 1°

MATERIAL:

THIRD ANGLE PROJECTION

DO NOT SCALE DRAWING

TITLE: WIRING INSTL-BODY,110V

SHEET 1 OF 4 | PART NO 144613

DWG NO 144613

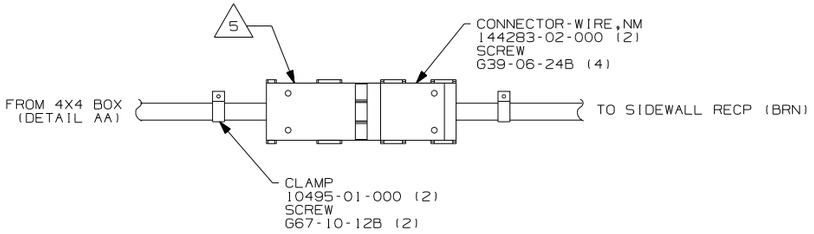

DETAIL BA

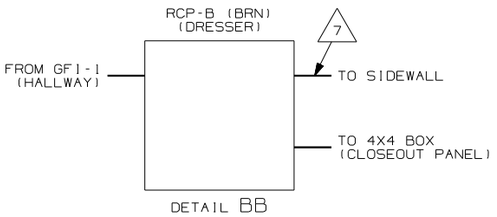

DETAIL BB

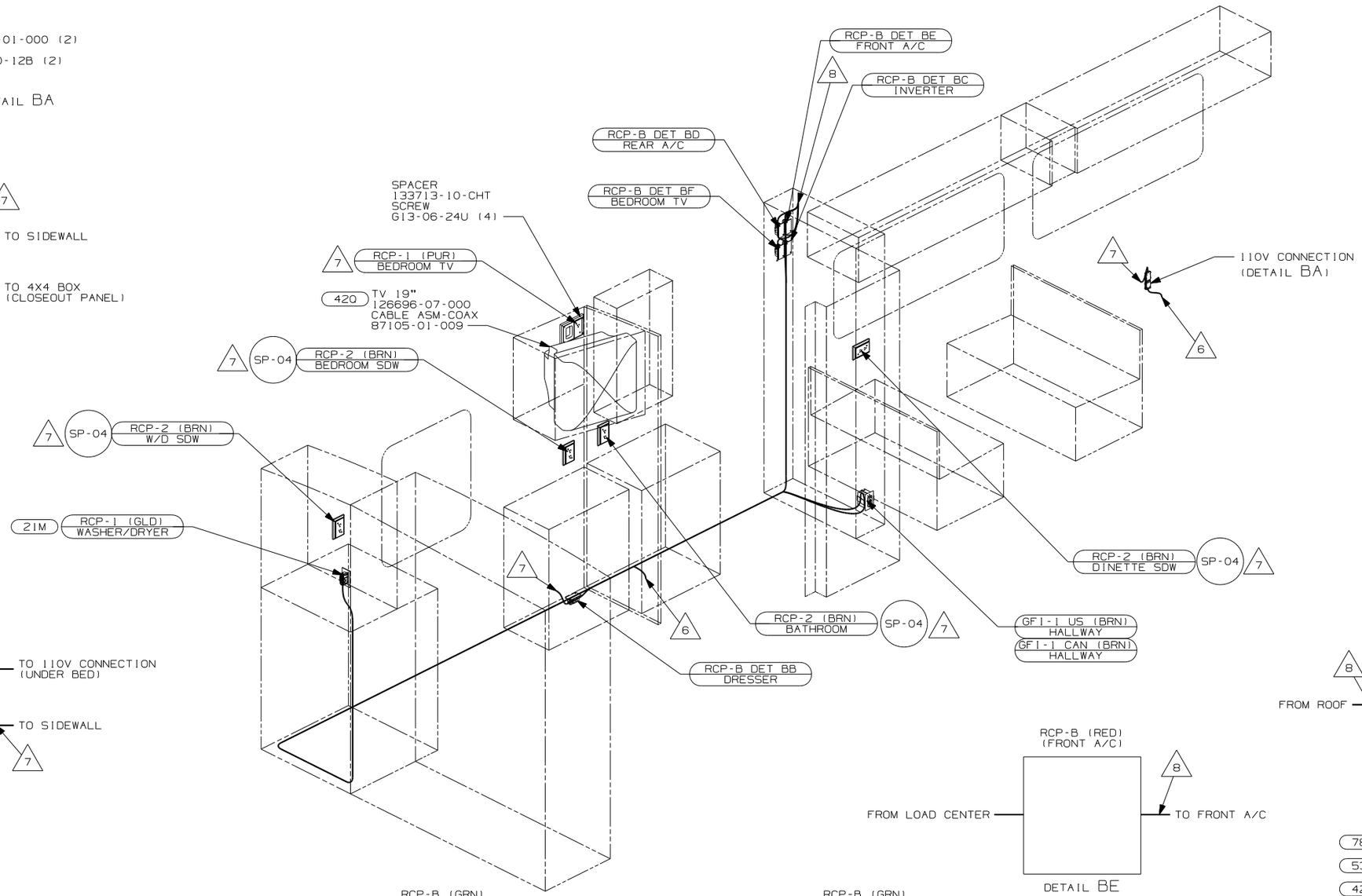

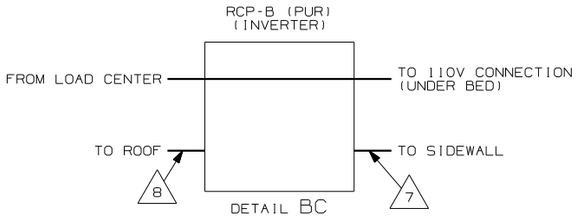

DETAIL BC

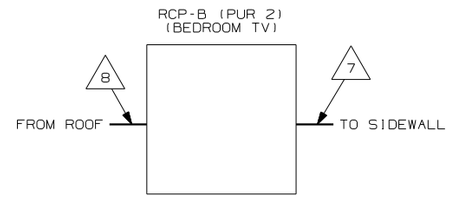

DETAIL BF

DETAIL BE

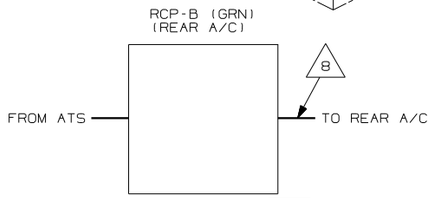

DETAIL BD (12D)

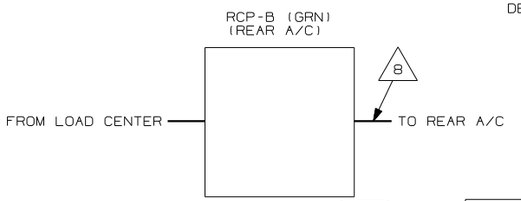

DETAIL BD (78J)

8 WIRE IN ROOF.

7 WIRE IN SIDEWALL.

6 WIRE ROUTED THROUGH FLOOR AT THIS POINT.

5 FOR MORE INFORMATION SEE LOAD CENTER/ATS ASM.

4. FOR MORE INFORMATION SEE WIRING DIAGRAM-BODY,110V.

3. ALL GROUND WIRES TO BE COVERED WITH TUBING 8041-02-000.

2. ALL 110V WIRE TO BE CLAMPED WITH CLAMP 10497-05-000 WITHIN 200MM OF OUTLET BOXES, USE SCREW G67-10-12B.

1. ALL WIRES TO BE SECURED WITH CLAMP 10495-01-000 OR CLIP 80734-01-000 EVERY 600MM. USE SCREW G67-10-12B UNLESS OTHERWISE SPECIFIED.

NOTES:

78J ELECTRICAL SYTEM - 50 AMP
53D WTR HTR-6GAL/ELE/LP/MOTORAID
420 TV - 19" COLOR W/REMOTE
265 CODES/STANDARDS - CSA/CMVSS
1B1 CODES/STANDARDS - USA
12D ELECTRICAL SYSTEM - 30 AMP

12D 1B1 265 78J

FOR ELECTRICAL TORQUE SPECIFICATIONS SEE DWG NO. 128783-01-000

X-X FOR ELECTRICAL CALLOUTS SEE DWG NO. 121339-01-000

FIRST USED 04 F34D

DO NOT SCALE DRAWING

TITLE: WIRING INSTL-BODY,110V

SHEET 2 PART NO 144613

DWG NO 144613

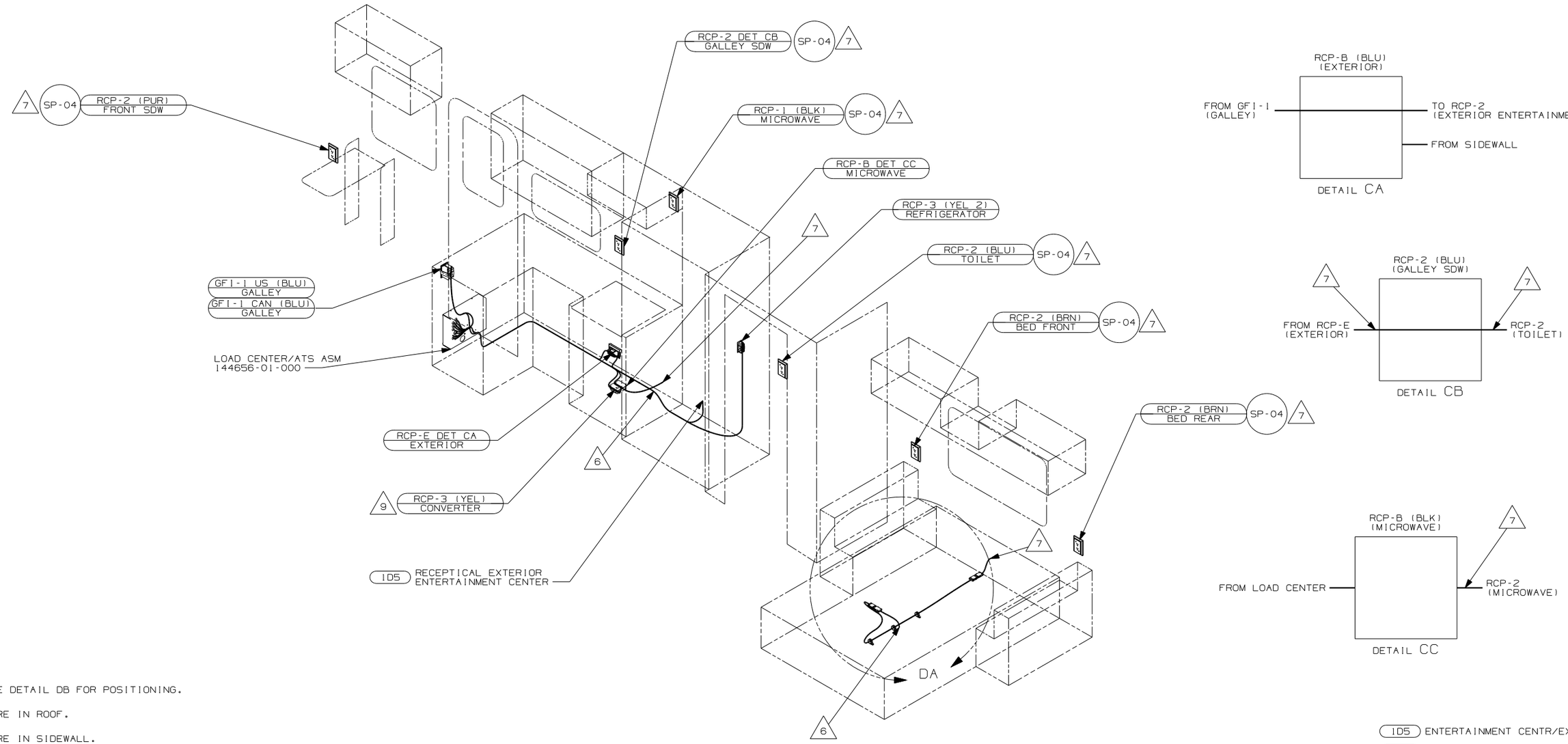

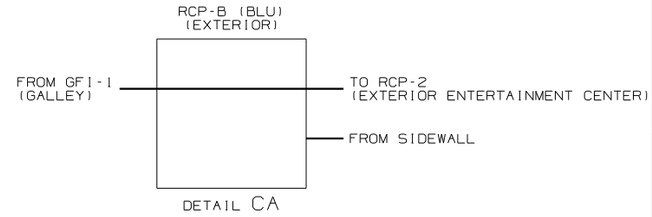

NOTES:

1. ALL WIRES TO BE SECURED WITH CLAMP 10495-01-000 OR CLIP 80734-01-000 EVERY 600MM. USE SCREW G67-10-12B UNLESS OTHERWISE SPECIFIED.
2. ALL 110V WIRE TO BE CLAMPED WITH CLAMP 10497-05-000 WITHIN 200MM OF OUTLET BOXES, USE SCREW G67-10-12B.
3. ALL GROUND WIRES TO BE COVERED WITH TUBING 8041-02-000.
4. FOR MORE INFORMATION SEE WIRING DIAGRAM-BODY,110V.

△5 FOR MORE INFORMATION SEE LOAD CENTER/ATS ASM.

△6 WIRE ROUTED THROUGH FLOOR AT THIS POINT.

△7 WIRE IN SIDEWALL.

△8 WIRE IN ROOF.

△9 SEE DETAIL DB FOR POSITIONING.

(1D5) ENTERTAINMENT CENTR/EXT W/CD
(78J) ELECTRICAL SYTEM - 50 AMP
(265) CODES/STANDARDS - CSA/CMVSS
(1B1) CODES/STANDARDS - USA
(12D) ELECTRICAL SYSTEM - 30 AMP

(12D) (1B1) (265) (78J)

FOR ELECTRICAL TORQUE SPECIFICATIONS SEE DWG NO. 128783-01-000

(X-X) FOR ELECTRICAL CALLOUTS SEE DWG NO. 121339-01-000

FIRST USED 04 F34D

DO NOT SCALE DRAWING

TITLE: WIRING INSTL-BODY,110V

SHEET 3 PART NO 144613

DWG NO 144613

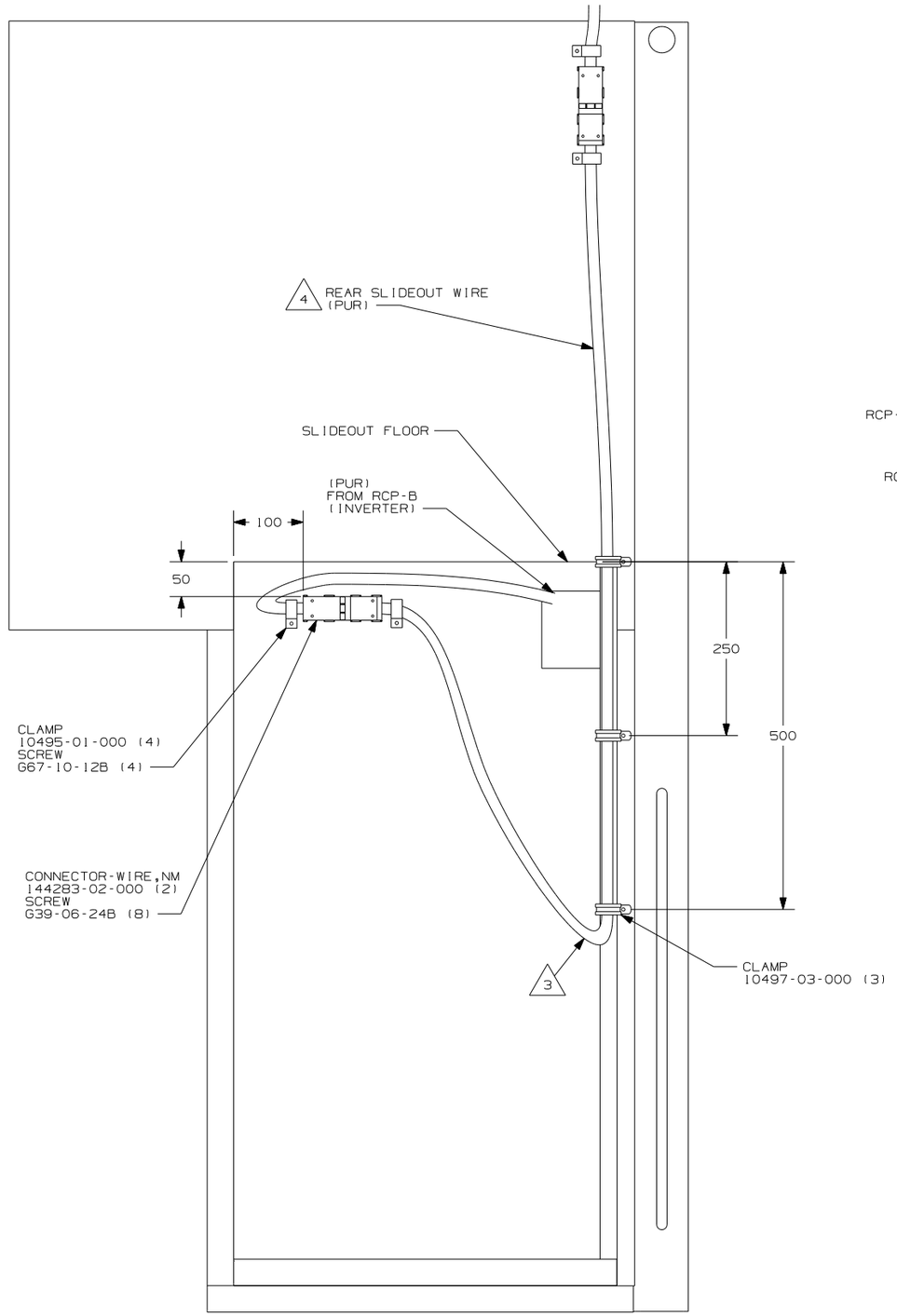

DETAIL DA

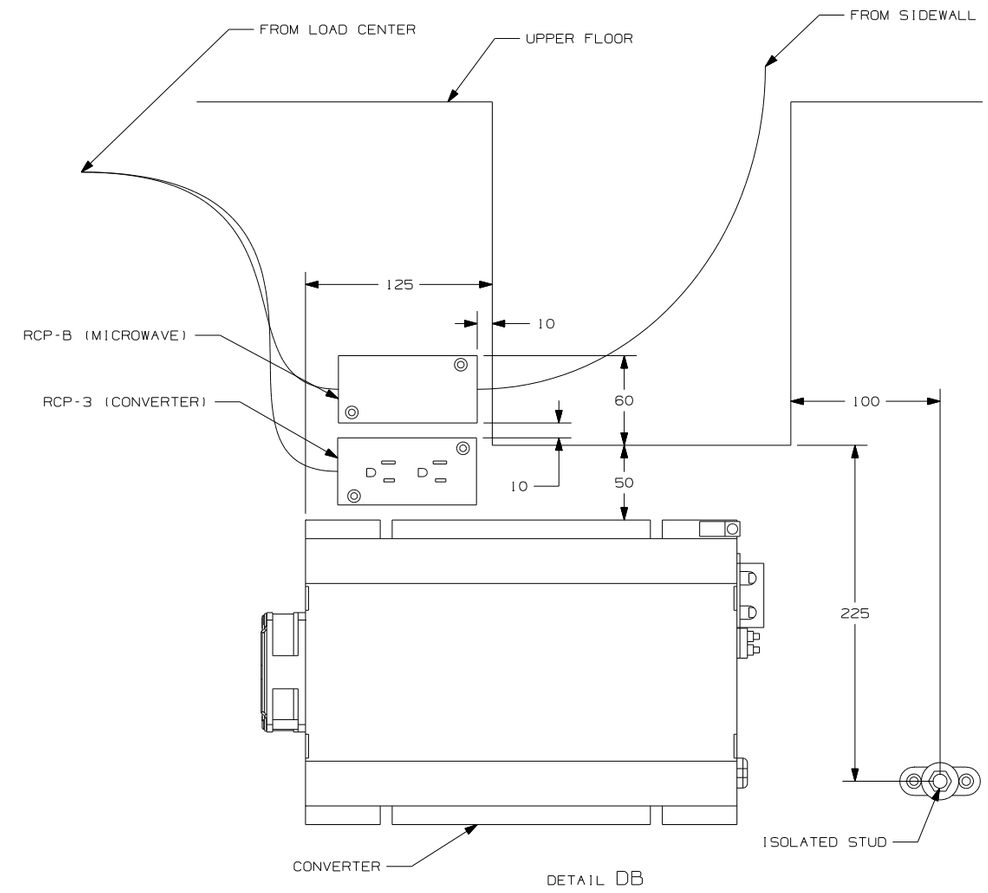

DETAIL DB

4 FOR MORE INFORMATION SEE LOAD CENTER ASM.

3 MAKE LOOP AS SMALL AS POSSIBLE WHRN SLIDEOUT IS COMPLETELY RETRACTED.

2. RUN 12V WIRE ALONG WITH SLIDEOUT WIRE.

1. WIRE MUST BE ROUTED THROUGH CLAMPS AS SHOWN.

NOTES:

78J ELECTRICAL SYTEM - 50 AMP
265 CODES/STANDARDS - CSA/CMVSS
1B1 CODES/STANDARDS - USA
12D ELECTRICAL SYSTEM - 30 AMP

12D 1B1 265 78J

FOR ELECTRICAL TORQUE SPECIFICATIONS SEE DWG NO. 128783-01-000

X-X FOR ELECTRICAL CALLOUTS SEE DWG NO. 121339-01-000

FIRST USED 04 F34D

DO NOT SCALE DRAWING

TITLE: WIRING INSTL-BODY,110V

SHEET 4 PART NO 144613

RELEASE	REV	DATE	DWG NO
	A		144615

REV	ZONE	REVISION RECORD	DATE	DFTR	ORIG

J — 6 BLK — J — ISOLATED STUD

BY — 8 BLK — BY — PASS THROUGH STUD

CONNECTS TO WIRE ASM-ELECTRICAL BOX (SHT 6, D-2) LOCATED IN STEP BOX

CONNECTS TO GENERATOR △4

A-LN 16 WHT
B-LM 16 WHT
C-LL 16 WHT
D-
E-
F-LP 16 YEL
G-
H-

LP LN LM LL

CONNECTS TO WIRE ASM-IP MAIN △5

A1-WP 10 YEL
A2-KS 14 YEL
A3-
B1-DJ 16 YEL
B2-DK 16 WHT
B3-DL 16 YEL
B4-DM 16 WHT
C1-KE 14 YEL
C2-
D1-LL 16 WHT
D2-LM 16 WHT
D3-LN 16 WHT
D4-LP 16 YEL
E1-MM 14 YEL
E2-BBN 16 YEL
F1-BBM 16 YEL
F2-KKK 16 YEL
G1-DDA 16 YEL
G2-CCY 16 YEL
G3-LR 14 YEL
G4-
H1-KU 14 YEL
H2-
J1-
J2-
J3-
J4-
K1-
K2-
K3-

LL LM LN LP WP KU KS MM DJ DK KE LR DL DM BBN BBM KKK CCY DDA

1-LH 16 YEL
2-LJ 16 YEL
3-LL 16 WHT
4-LM 16 WHT
5-LN 16 WHT
6-LP 16 YEL
7-MM 14 YEL
8-NW 14 YEL
9-WH 14 YEL
10-XU 14 YEL
11-EEC 12 YEL
12-FFD 12 YEL

CONNECTS TO WIRE ASM-COACH (SHT 2, B-32) LOCATED BELOW GALLEY CABTS

LH LL LM LN LP MM XU EEC LJ NW WH FFD

CONNECTS TO REAR AUTO HEATER

1-PA 14 WHT
2-KS 14 YEL
3-
4-KU 14 YEL

KU KS PA

PA 14 WHT
JN 14 WHT
EED 12 WHT
MP 16 WHT
MP-1 18 WX
WE 14 WHT
FM 14 WHT
MS 16 WHT

GROUND △3

PA JN EED MP MP-1 WE FM MS

CONNECTS TO WIRE ASM SIDEWALL (SHT 4, A-3) LOCATED BEHIND SOFA

1-DJ 16 YEL
2-DK 16 WHT
3-JG 14 YEL
4-JN 14 WHT
5-MM 14 YEL
6-MS 16 WHT

MS JN MM DJ DK JG

CONNECTS TO WIRE ASM ELECTRICAL BOX (SHT 5, C-4) LOCATED IN STEP BOX

1-
2-
3-ER 16 YEL
4-
5-LG 16 YEL
6-FM 14 WHT
7-LR 14 YEL
8-HS 16 YEL
9-WH 14 Y
10-KE 14 YEL
11-LH 16 YEL
12-
13-LJ 16 YEL
14-FFD 12 YEL
15-KA 12 YEL

FFD LH KA LJ KE LR WH FM HS ER LG

COMPARTMENT LAMP

NW 14 YEL
WE 14 WHT

NW WE

LG ER DJ DK HS JG DL DM BBN BBM KKK CCY DDA ES JT

CONNECTS TO WIRE ASM-COACH (SHT 2, C-24) LOCATED BELOW GALLEY CABTS

1-BBM 16 YEL
2-BBN 16 YEL
3-DDA 16 YEL
4-CCY 16 YEL
5-KKK 16 YEL
6-DJ 16 YEL
7-DK 16 WHT
8-DL 16 YEL
9-DM 16 WHT
10-ER 16 YEL
11-ES 16 YEL
12-HS 16 YEL
13-JG 14 YEL
14-JT 16 YEL
15-LG 16 YEL

△5 SEE WIRING DIAGRAM-AUTO FOR ADDITIONAL INFORMATION.

△4 SEE MANUFACTURERS DIAGRAM FOR ADDITIONAL INFORMATION.

△3 GROUNDS ARE SHOWN AS A SINGLE LINE FOR EASE IN TRACING. EACH GROUND CIRCUIT IS SEPERATE IN THE HARNESS.

[2] NOT A SPLICE POINT. INDICATES ENTRY INTO WIRING HARNESS.

1. SPLICES ARE THEORETICAL AND MAY DIFFER IN THE HARNESS.

NOTES:

WP

1-WP 10 YEL
2-

CONNECTS TO WIRE ASM ELECTRICAL BOX (SHT 5, D-4) LOCATED IN STEP BOX

XU

1-XU 14 YEL
2-

CONNECTS TO WIRE ASM-SIDEWALL LEFT (SHT 4, A-2) LOCATED BEHIND SOFA

EEC EED

1-EEC 12 YEL
2-EED 12 WHT

CONNECTS TO △4 WIRE ASM-SOFA,REST EASY (SHT 5, C-8) LOCATED BEHIND SOFA

NW WE

NW 14 YEL
WE 14 WHT

COMPARTMENT LAMP

NW WE

NW 14 YEL
WE 14 WHT

COMPARTMENT LAMP

ES KA WH KD

A-KA 12 YEL
B-WH 14 YEL
C-KD 18 WHT
D-ES 16 YEL

ELECTRIC STEP

18 WHT 18 WHT
KD MP-1

ELECTRIC STEP SWITCH

16 WHT 16 YEL
MP JT

LP TANK

WIRING DIAGRAM-CHASSIS

(WIRE ASM-144616 REV E)

COPYRIGHT 2002 WINNEBAGO INDUSTRIES, INC.

DFTR	ORIG. DATE
CHKR	ALL DIMENSIONS ARE IN MILLIMETERS
P.E.	
M.E.	FIRST USED 04 F34D
DSNR	

UNSPECIFIED TOLERANCES ARE:
WHOLE DIM (X) :
ONE-PLACE (X.X) :
TWO-PLACE (X.XX) :
ANGLE :
THIRD ANGLE PROJECTION

MATERIAL:

DO NOT SCALE DRAWING

TITLE: WIRING DIAGRAM-BODY,12V

SHEET 1 OF 5 | PART NO 144615

DWG NO 144615

CONNECTS TO WIRE ASM-SIDEWALL (SHT 4, C-7) LOCATED BELOW GALLEY CABTS.

1-DL 16 YEL
2-DM 16 WHT
3-JE 14 YEL
4-MM 14 YEL
5-MS 14 WHT
6-NE 14 WHT
7-PJ 14 YEL
8-WE 14 WHT
9-

PJ JE DM DL MM WE NE MS

CONNECTS TO WIRE ASM-SIDEWALL (SHT 4, D-8) LOCATED BELOW GALLEY CABTS.

1-FFH 12 YEL
2-FFJ 12 WHT

FFJ FFH

CONNECTS TO AWNING CONTROL BOX

1-FFD 12 YEL
2-FFE 12 WHT
3-WH 14 YEL
4-
5-FFN 12 YEL
6-
7-
8-FFJ 12 WHT
9-
10-FFR 12 YEL
11-
12-
13-FFH 12 YEL
14-
15-FFP 12 YEL

FFH FFJ WH FFD FFE FFN FFP FFR

CONNECTS TO AWNING SWITCH

1-FFR 12 YEL
2-FFP 12 YEL
3-FFN 12 YEL
4-
5-
6-
7-
8-

FFR FFP FFN

WIRE ASM-SIDEWALL H → H POWER CORD COMPARTMENT

WIRE ASM-ROOF
- RED → POWER CORD COMPARTMENT
- GRN-2 → WIRE ASM-SIDEWALL
- YEL → EXTERIOR ENTERTAINMENT CENTER

PJ
JE
M
ET
DM
JB
GND
DL
WH
MM
LP
BBJ
FFD
JA
GGS
JJ
JH

CONNECTS TO FURNACE △4

JB
JM
JJ
JH

1-JM 14 WHT
2-JJ 14 YEL
3-JB 14 YEL
4-JH 14 YEL

BBC
BBD
BBE
BBF

1-BBC 16 YEL
2-BBD 16 YEL
3-BBE 16 YEL
4-BBF 16 YEL △4

CONNECTS TO LOAD SHEDDER MONITOR PANEL

1-BBC 16 YEL
2-BBD 16 YEL
3-BBE 16 YEL
4-BBF 16 YEL

LOAD SHEDDER MONITOR PANEL

L U K

GROUND

U 8 GRN
L 6 GRN

K M

ISOLATED STUD

M 6 BLK
K 6 BLK

GGS JP DD BBH

1-DD 16 YEL
2-BBH 16 YEL
3-JP 14 WHT
4-GGS 16 YEL

CONNECTS TO REAR THERMOSTAT △4

BBH DD BBJ LP JA JA JP

1-JA 12 YEL
2-JP 14 WHT
3-
4-BBJ 16 YEL
5-DD 16 YEL
6-BBH 16 YEL
7-JA 12 YEL
8-LP 16 YEL

CONNECTS TO LOAD SHEDDER CONTROL BOARD

JA JP

1-JA 12 YEL
2-JP 14 WHT

CONNECTS TO EXTERIOR ENTERTAINMENT CENTER

ET EU

REFRIGERATOR

ET 16 YEL
EU 16 WHT

WIRING DIAGRAM-COACH

(WIRE ASM-144808 REV H)

FIRST USED	04 F34D
	DO NOT SCALE DRAWING
TITLE:	WIRING DIAGRAM-BODY, 12V
SHEET 2	PART NO 144615

F1

BEDROOM LAMP SWITCH

JD 14 YEL
PC 14 YEL

CONNECTS TO WIRE ASM-ROOF (SHT 3, C-8) LOCATED BEHIND MONITOR PANEL

1-PD 14 YEL
2-PE 14 YEL
3-PF 14 YEL
4-PL 14 YEL
5-WX 14 YEL
6-XP 16 YEL
7-XR 16 YEL
8-XS 16 YEL
9-BBJ 16 YEL
10-GGR 16 YEL
11-GGS 16 YEL
12-

LOUNGE CEILING LAMP SWITCH

PL 14 YEL
JE 14 YEL

CONNECTS TO WIRE ASM-SIDEWALL (SHT 4, A-6) LOCATED BELOW HEAD OF BED

1-JC 14 YEL
2-NC 14 WHT

12V BREAKER PANEL

WB 16 YEL
WC 14 YEL
EEC 12 YEL
JA 12 YEL
JB 14 YEL
JC 14 YEL
JD 14 YEL
JE 14 YEL
JF 14 YEL
NM 14 YEL
ET 16 YEL
JG 14 YEL
M 6 BLK

MAKEUP LAMP SWITCH

JF 14 YEL
PD 14 YEL

PORCH STEP LAMP SWITCH

WC 14 YEL
PJ 14 YEL

STEP LAMP

PJ 14 YEL
WE 14 WHT

COMPARTMENT LAMP

NW 14 YEL
WE 14 WHT

WX
WB
JE
PC
JD
JG
DM
JB
GND
DL
WH
MM
NW
EEC
LP
WC
NM
FFD
JA
PJ
M
ET
BBJ
GGS
JJ
JH

CS JJ JH XP

1-XP 16 YEL
2-JH 14 YEL
3-CS 16 WHT
4-JJ 14 YEL

CONNECTS TO FRONT THERMOSTAT 4

XR XS GGR

1-XS 16 YEL
2-XR 16 YEL
3-GGR 16 YEL
4-

CONNECTS TO FRONT THERMOSTAT 4

HHZ JJB HHY JJA

1-HHY 16 WHT
2-HHZ 16 YEL
3-JJA 16 YEL
4-JJB 16 YEL

CONNECTS TO AWNING CONTROL BOX

JJA HHY JJB HHZ

1-HHY 16 WHT
2-HHZ 16 YEL
3-JJA 16 YEL
4-JJB 16 YEL

CONNECTS TO WIRE ASM-ROOF (SHT 3, D-8) LOCATED BEHIND MONITOR PANEL

TOILET LAMP SWITCH

14 YEL PE
14 YEL JF

SHOWER LAMP SWITCH

14 YEL JF
14 YEL PF

AISLE LAMP SWITCH

14 YEL JF
14 YEL PH

AISLE LAMP

14 YEL PH
14 WHT NF

NM PM

1-NM 14 YEL
2-PM 14 WHT

CONNECTS TO WIRE ASM-RADIOS

DWG NO 144615 S2 F2

CONNECTS TO DRAINAGE COMP LAMP SWITCH

1-
2-WC 14 YEL
3-WA 14 YEL
4-
5-
6-
7-
8-

WC WA

CONNECTS TO WIRE ASM-SIDEWALL (SHT 4, D-3) LOCATED BELOW BEDROOM DESK

1-JD 14 YEL
2-ND 14 WHT
3-NM 14 YEL
4-PM 14 WHT
5-WA 14 YEL
6-WE 14 WHT

JD WA NM PM WE ND

HALL LAMP SWITCH

JD YM YN
14 14 14
YEL YEL YEL

HALL LAMP SWITCH

YN YM WX
14 14 14
YEL YEL YEL

GALLEY LAMP SWITCH

A JE
14 14
YEL YEL

CONNECTS TO LP DETECTOR △4

1-UK 16 WHT
2-
3-WB 16 YEL

UK WB

DINETTE LAMP SWITCH

XU JG
14 14
YEL YEL

WX
WB
A — JE
PC
JD
JG
DM
JB
GND — 2
DL — 2
WH — 2
MM — 2
NW — 2
EEC — 2
LP
JS
FFD
JA
XU

12 12
YEL WHT
JS JY

WATER PUMP

WE NW

1-NW 14 YEL
2-WE 14 WHT

CONNECTS TO WIRE ASM-EXTENSION (SHT 5, D-8) LOCATED BELOW BED

14 14
YEL WHT
NW WE

COMPARTMENT LAMP

14 14
YEL WHT
NW WE

COMPARTMENT LAMP

14 14
YEL WHT
WA WE

DRAINAGE COMPARTMENT LAMP

EU MS GL JM JY HT-1 KF UK NE JP JX NC ND PM WE NF CS FFE

GROUND △3

GL 16 WHT
JM 14 WHT
JY 12 WHT
HT-1 16 WHT
KF 16 WHT
UK 16 WHT
NE 14 WHT
EU 16 WHT
MS 14 WHT
JP 14 WHT
JX 14 WHT
NC 14 WHT
ND 14 WHT
PM 14 WHT
WE 14 WHT
NF 14 WHT
CS 16 WHT
FFE 12 WHT

NW WC

1-
2-WC 14 YEL
3-NW 14 YEL
4-
5-
6-
7-
8-

CONNECTS TO MASTER COMPARTMENT LAMPS SWITCH

DWG NO 144615 S2 F3

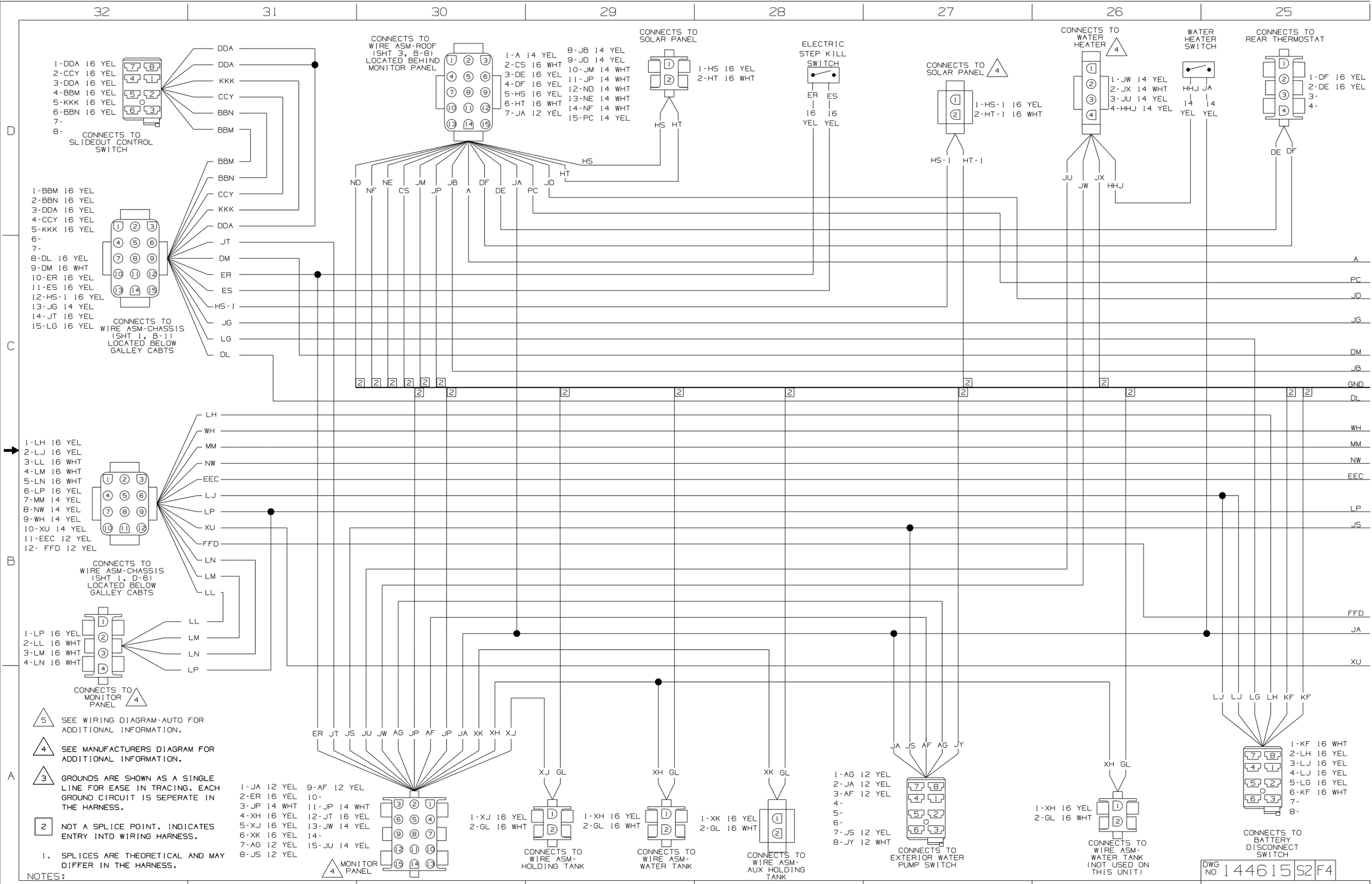
1-DDA 16 YEL
2-CCY 16 YEL
3-DDA 16 YEL
4-BBM 16 YEL
5-KKK 16 YEL
6-BBN 16 YEL
7-
8-
CONNECTS TO SLIDEOUT CONTROL SWITCH
DDA
DDA
KKK
CCY
BBN
BBM
BBM
BBN
CCY
KKK
DDA
JT
DM
ER
ES
HS-1
JG
LG
DL
1-BBM 16 YEL
2-BBN 16 YEL
3-DDA 16 YEL
4-CCY 16 YEL
5-KKK 16 YEL
6-
7-
8-DL 16 YEL
9-DM 16 WHT
10-ER 16 YEL
11-ES 16 YEL
12-HS-1 16 YEL
13-JG 14 YEL
14-JT 16 YEL
15-LG 16 YEL
CONNECTS TO WIRE ASM-CHASSIS (SHT 1, B-1) LOCATED BELOW GALLEY CABTS
CONNECTS TO WIRE ASM-ROOF (SHT 3, B-8) LOCATED BEHIND MONITOR PANEL
1-A 14 YEL
2-CS 16 WHT
3-DE 16 YEL
4-DF 16 YEL
5-HS 16 YEL
6-HT 16 WHT
7-JA 12 YEL
8-JB 14 YEL
9-JD 14 YEL
10-JM 14 WHT
11-JP 14 WHT
12-ND 14 WHT
13-NE 14 WHT
14-NF 14 WHT
15-PC 14 YEL
ND NF NE CS JM JP JB A DF DE JA PC JD HS HT
CONNECTS TO SOLAR PANEL
1-HS 16 YEL
2-HT 16 WHT
HS HT
ELECTRIC STEP KILL SWITCH
ER ES
16 16
YEL YEL
CONNECTS TO SOLAR PANEL 4
1-HS-1 16 YEL
2-HT-1 16 WHT
HS-1 HT-1
CONNECTS TO WATER HEATER 4
1-JW 14 YEL
2-JX 14 WHT
3-JU 14 YEL
4-HHJ 14 YEL
JU JW JX HHJ
WATER HEATER SWITCH
HHJ JA
14 14
YEL YEL
CONNECTS TO REAR THERMOSTAT
1-DF 16 YEL
2-DE 16 YEL
3-
4-
DE DF
A
PC
JD
JG
DM
JB
GND
DL
WH
MM
NW
EEC
LP
JS
FFD
JA
XU
LJ LJ LG LH KF KF
1-KF 16 WHT
2-LH 16 YEL
3-LJ 16 YEL
4-LJ 16 YEL
5-LG 16 YEL
6-KF 16 WHT
7-
8-
CONNECTS TO BATTERY DISCONNECT SWITCH
1-LH 16 YEL
2-LJ 16 YEL
3-LL 16 WHT
4-LM 16 WHT
5-LN 16 WHT
6-LP 16 YEL
7-MM 14 YEL
8-NW 14 YEL
9-WH 14 YEL
10-XU 14 YEL
11-EEC 12 YEL
12- FFD 12 YEL
LH WH MM NW EEC LJ LP XU FFD LN LM LL
CONNECTS TO WIRE ASM-CHASSIS (SHT 1, D-6) LOCATED BELOW GALLEY CABTS
1-LP 16 YEL
2-LL 16 WHT
3-LM 16 WHT
4-LN 16 WHT
LL LM LN LP
CONNECTS TO MONITOR PANEL 4
ER JT JS JU JW AG JP AF JP JA XK XH XJ
1-JA 12 YEL
2-ER 16 YEL
3-JP 14 WHT
4-XH 16 YEL
5-XJ 16 YEL
6-XK 16 YEL
7-AG 12 YEL
8-JS 12 YEL
9-AF 12 YEL
10-
11-JP 14 WHT
12-JT 16 YEL
13-JW 14 YEL
14-
15-JU 14 YEL
4 MONITOR PANEL
XJ GL
1-XJ 16 YEL
2-GL 16 WHT
CONNECTS TO WIRE ASM-HOLDING TANK
XH GL
1-XH 16 YEL
2-GL 16 WHT
CONNECTS TO WIRE ASM-WATER TANK
XK GL
1-XK 16 YEL
2-GL 16 WHT
CONNECTS TO WIRE ASM-AUX HOLDING TANK
JA JS AF AG JY
1-AG 12 YEL
2-JA 12 YEL
3-AF 12 YEL
4-
5-
6-
7-JS 12 YEL
8-JY 12 WHT
CONNECTS TO EXTERIOR WATER PUMP SWITCH
XH GL
1-XH 16 YEL
2-GL 16 WHT
CONNECTS TO WIRE ASM-WATER TANK (NOT USED ON THIS UNIT)
5 SEE WIRING DIAGRAM-AUTO FOR ADDITIONAL INFORMATION.
4 SEE MANUFACTURERS DIAGRAM FOR ADDITIONAL INFORMATION.
3 GROUNDS ARE SHOWN AS A SINGLE LINE FOR EASE IN TRACING. EACH GROUND CIRCUIT IS SEPERATE IN THE HARNESS.
2 NOT A SPLICE POINT. INDICATES ENTRY INTO WIRING HARNESS.
1. SPLICES ARE THEORETICAL AND MAY DIFFER IN THE HARNESS.
NOTES:
DWG NO 144615 S2 F4

DWG NO 144615

CONNECTS TO WIRE ASM-COACH RIGHT (SHT 2, A-13) LOCATED BEHIND MONITOR PANEL

1-HHY 16 WHT
2-HHZ 16 YEL
3-JJA 16 YEL
4-JJB 16 YEL

HHY — HHY
HHZ — HHZ
JJA — JJA
JJB — JJB

CONNECTS TO AWNING WIND SENSOR

1-HHY 16 WHT
2-HHZ 16 YEL
3-JJA 16 YEL
4-JJB 16 YEL

FRONT A/C

GGR 16 YEL
XS 16 YEL
XP 16 YEL
XR 16 YEL
CS 16 WHT

GGR XP XR XS CS

TOILET CEILING LAMP — PE NF — 14 YEL 14 WHT

DINETTE CEILING LAMP — A NE — 14 YEL 14 WHT

GALLEY CEILING LAMP — A NE — 14 YEL 14 WHT

LOUNGE CEILING LAMP — PL NE — 14 YEL 14 WHT

BEDROOM CEILING LAMP — PC ND — 14 YEL 14 WHT

BEDROOM CEILING LAMP — PC ND — 14 YEL 14 WHT

CONNECTS TO WIRE ASM-COACH RIGHT (SHT 2, D-15) LOCATED BEHIND MONITOR PANEL

1-PD 14 YEL
2-PE 14 YEL
3-PF 14 YEL
4-PL 14 YEL
5-WX 14 YEL
6-XP 16 YEL
7-XR 16 YEL
8-XS 16 YEL
9-BBJ 16 YEL
10-GGR 16 YEL
11-GGS 16 YEL
12-

GGR
XP
XR
XS
PE
PL
WX
PF
PD
GGS
BBJ

14 WHT — ND
14 YEL — WX
HALL CEILING LAMP

14 YEL — PD
14 WHT — NF
MAKEUP LAMP

14 WHT — NF
14 YEL — PF
SHOWER LAMP

14 WHT — ND
14 YEL — PG
14 YEL — JD
WARDROBE LAMP

14 YEL — JD
14 YEL — PG
WARDROBE LAMP SWITCH

14 WHT — ND
14 YEL — PG
14 YEL — JD
WARDROBE LAMP

CONNECTS TO WIRE ASM-COACH RIGHT (SHT 2, D-30) LOCATED BEHIND MONITOR PANEL

1-A 14 YEL
2-CS 16 WHT
3-DE 16 YEL
4-DF 16 YEL
5-HS 16 YEL
6-HT 16 WHT
7-JA 14 YEL
8-JB 14 YEL
9-JD 14 YEL
10-JM 14 WHT
11-JP 14 WHT
12-ND 14 WHT
13-NE 14 WHT
14-NF 14 WHT
15-PC 14 YEL

NE
NF
ND
A
PC
JD
JM
JB
JA
JP
HT
HS
DF
DE
CS

WIRE ASM-COACH TV ANTENNA

RED GRN BLU

SWITCHING CONTROL CENTER

CS DE DF BBJ GGS

GGS 16 YEL
BBJ 16 YEL
DE 16 YEL
DF 16 YEL
CS 16 WHT

REAR A/C

HS HT

A-HS 16 YEL
B-HT 16 WHT

SOLAR PANEL

14 WHT — JP — ANTENNA GROUND

14 WHT 14 YEL — JP JA — DIGITAL SATELLITE ELEVATION SENSOR

14 WHT 14 YEL — JP JA — SWITCHING CONTROL CENTER

14 YEL — JA — TV SPEAKER SELECTOR SWITCH

14 YEL 14 WHT — JB JM — GALLEY VENT

14 YEL 14 WHT — JB JM — BATH VENT

WIRING DIAGRAM-ROOF
(WIRE ASM 144685 REV C)

NOTES:

FIRST USED	04 F34D
DO NOT SCALE DRAWING	
TITLE:	WIRING DIAGRAM-BODY 12V
SHEET 3	PART NO 144615

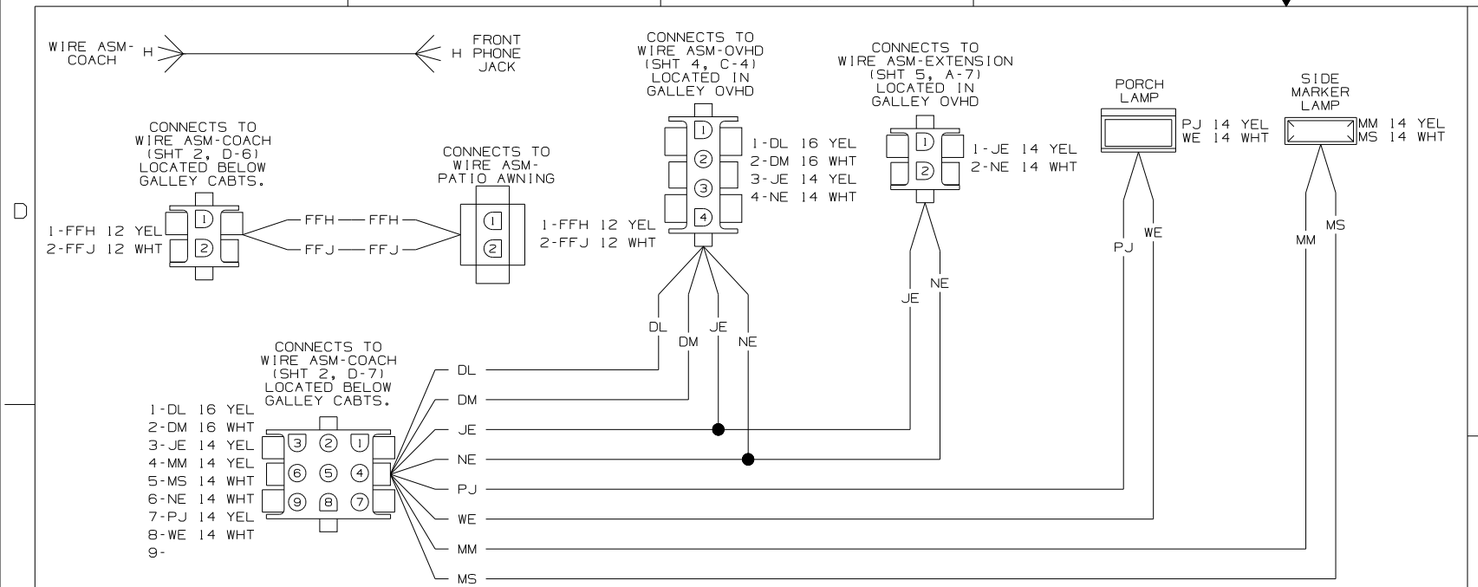

WIRING DIAGRAM SIDEWALL
(WIRE ASM 144663 REV D)

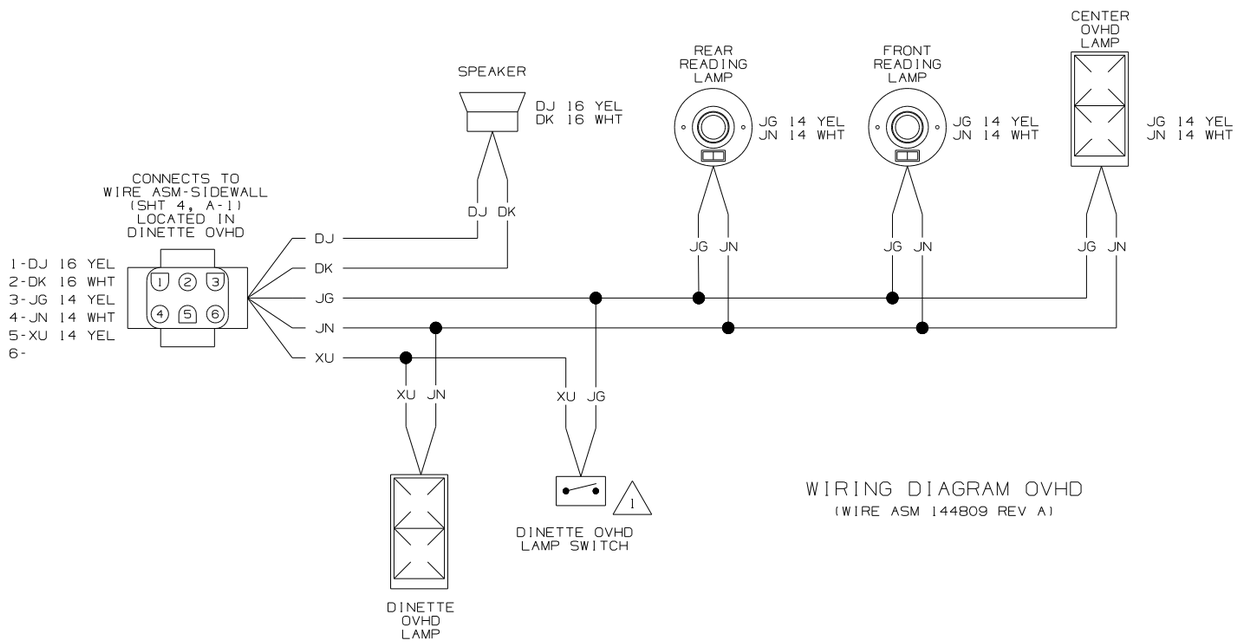

WIRING DIAGRAM OVHD
(WIRE ASM 144809 REV A)

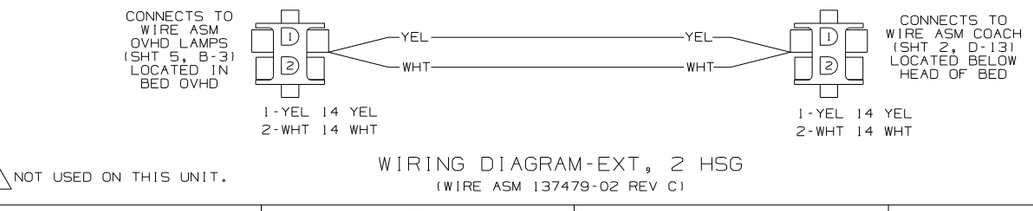

1 NOT USED ON THIS UNIT.

WIRING DIAGRAM-EXT, 2 HSG
(WIRE ASM 137479-02 REV C)

DWG NO 144615

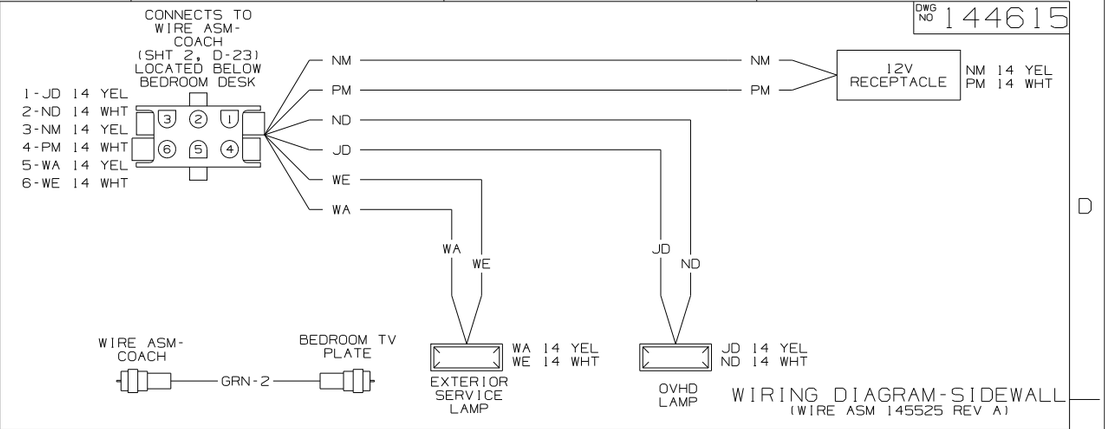

WIRING DIAGRAM-SIDEWALL
(WIRE ASM 145525 REV A)

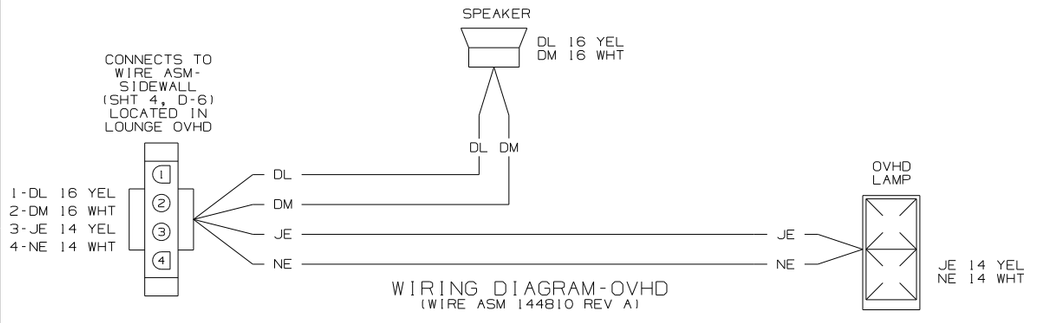

WIRING DIAGRAM-OVHD
(WIRE ASM 144810 REV A)

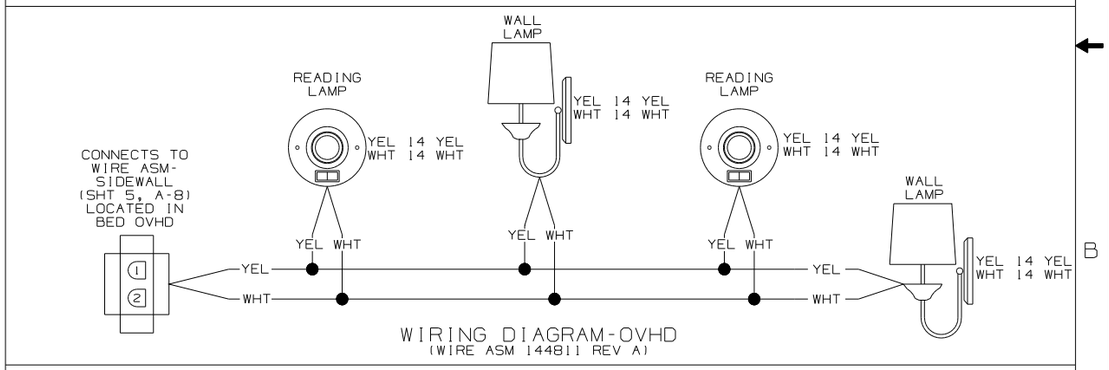

WIRING DIAGRAM-OVHD
(WIRE ASM 144811 REV A)

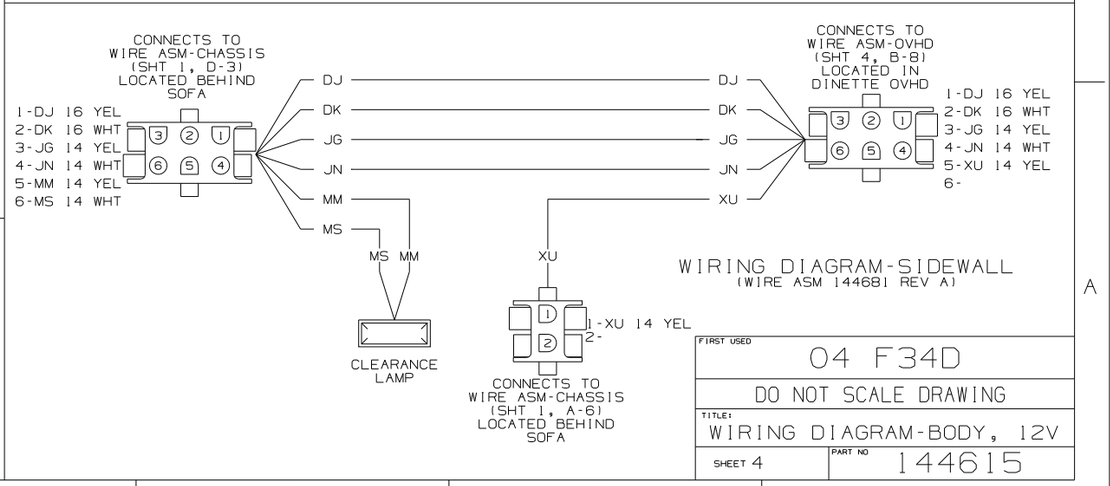

WIRING DIAGRAM-SIDEWALL
(WIRE ASM 144681 REV A)

FIRST USED	04 F34D
DO NOT SCALE DRAWING	
TITLE: WIRING DIAGRAM-BODY, 12V	
SHEET 4	PART NO 144615

DWG NO 144615

CONNECTS TO WIRE ASM-COACH (SHT 2, A-22) LOCATED BELOW BED

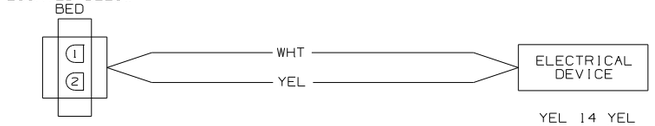

WIRING DIAGRAM-EXTENSION, 2 PIN
(WIRE ASM 133572-01 REV E)

CONNECTS TO MOTOR WIRING (LOCATED BEHIND SOFA)

CONNECTS TO REAR RECLINER SWITCH

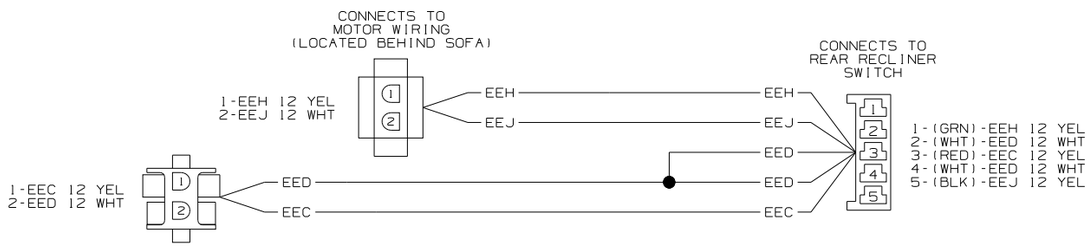

CONNECTS TO WIRE ASM-CHASSIS (SHT 1, A-5) (LOCATED BEHIND SOFA)

WIRING DIAGRAM-SOFA,SGL REST EASY
(WIRE ASM 136028-01 REV-A)

CONNECTS TO WIRE ASM-SIDEWALL (SHT 4, D-6) LOCATED IN GALLEY OVHD

WIRING DIAGRAM-EXTENSION, 2 PIN
(WIRE ASM 133572-01 REV E)

2 NOT USED

1 SEE MANUFACTURER'S DIAGRAM FOR ADDITIONA INFORMATION.

NOTES:

CONNECTS TO WIRE ASM-CHASSIS (SHT 1, D5/B5) (LOCATED IN STEP BOX)

CONNECTS TO WIRE ASM-CHASSIS (SHT 1, B16) (LOCATED IN STEP BOX)

1-WP 10 YEL
2-

CONNECTS TO WIRE ASM-CHASSIS (SHT 1,D7) (LOCATED IN STEP BOX)

1-
2-
3-ER 16 YEL
4-
5-LG 16 YEL
6-FM 16 WHT
7-LR 16 YEL
8-HS 16 YEL
9-WH 16 YEL
10-KE 16 YEL
11-LH 16 YEL
12-
13-LJ 16 YEL
14-FFD 14 YEL
15-KA 12 YEL

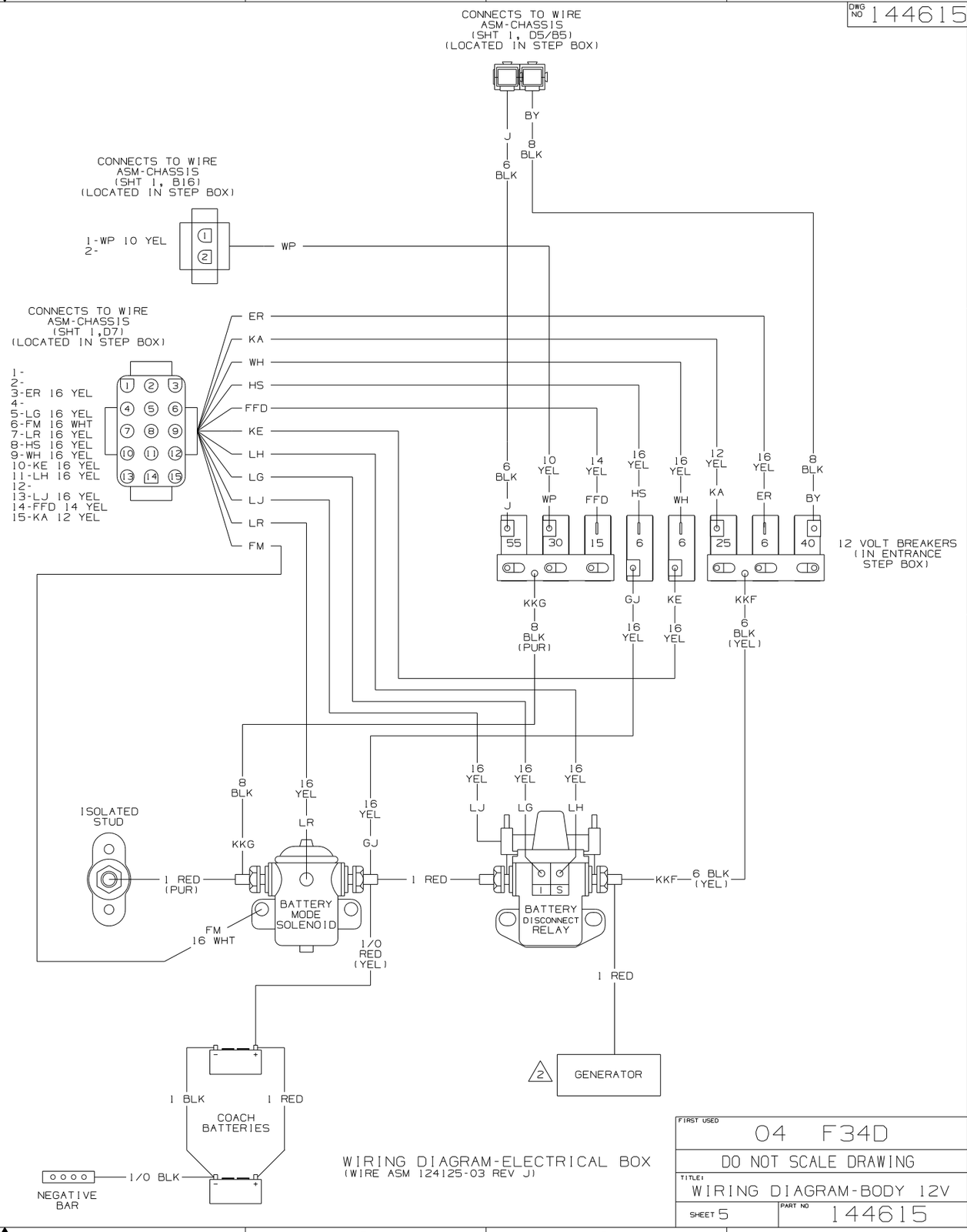

WIRING DIAGRAM-ELECTRICAL BOX
(WIRE ASM 124125-03 REV J)

FIRST USED	04 F34D
DO NOT SCALE DRAWING	
TITLE:	WIRING DIAGRAM-BODY 12V
SHEET 5	PART NO 144615

DRAWING NO.	FEATURE
144612-01	WIN
144612-02	ITA

RELEASE	REV	DATE	DWG NO
	A		144612

REV	ZONE	REVISION RECORD	DATE	DFTR-ORIG

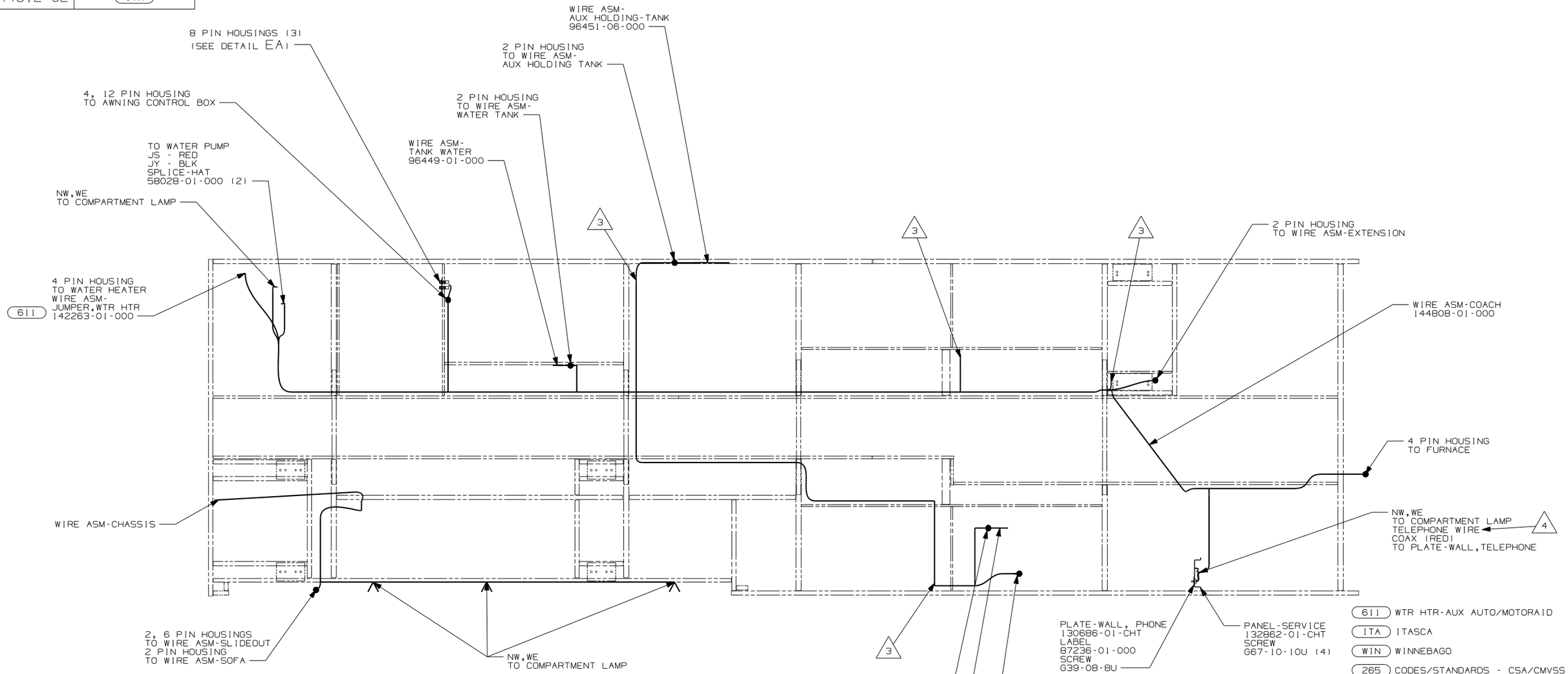

611 WTR HTR-AUX AUTO/MOTORAID

ITA ITASCA

WIN WINNEBAGO

265 CODES/STANDARDS - CSA/CMVSS

IB1 CODES/STANDARDS - USA

IB1 265

4 CONNECT TELEPHONE WIRES TO MATCHING COLORS ON PLATE-WALL, TELEPHONE.

3 WIRE PASSES THROUGH FLOOR AT THIS POINT.

2. SEE WIRING DIAGRAM-BODY,12V FOR ADDITIONAL INFORMATION.

1. ALL WIRES TO BE CLAMPED WITH CLAMP 10495-01-000 OR WIRE TIE 8343-02-000 EVERY 600MM, UNLESS OTHERWISE SPECIFIED.

NOTES:

FOR ELECTRICAL TORQUE SPECIFICATIONS SEE DWG NO. 128783-01-000

X-X FOR ELECTRICAL CALLOUTS SEE DWG NO. 121339-01-000

COPYRIGHT 2004
WINNEBAGO
INDUSTRIES, INC.

DFTR	ORIG. DATE
CHKR	ALL DIMENSIONS ARE IN MILLIMETERS
P.E.	
M.E.	FIRST USED 04 F34D
DSNR	

UNSPECIFIED TOLERANCES ARE:
WHOLE DIM (X) : 1
ONE-PLACE (X.X) : 1.5
TWO-PLACE (X.XX) : 0.50
ANGLE : 1°

MATERIAL:

THIRD ANGLE PROJECTION

DO NOT SCALE DRAWING

TITLE: WIRING INSTL-BODY,12V

SHEET 1 OF 7 | PART NO 144612

DWG NO 144612

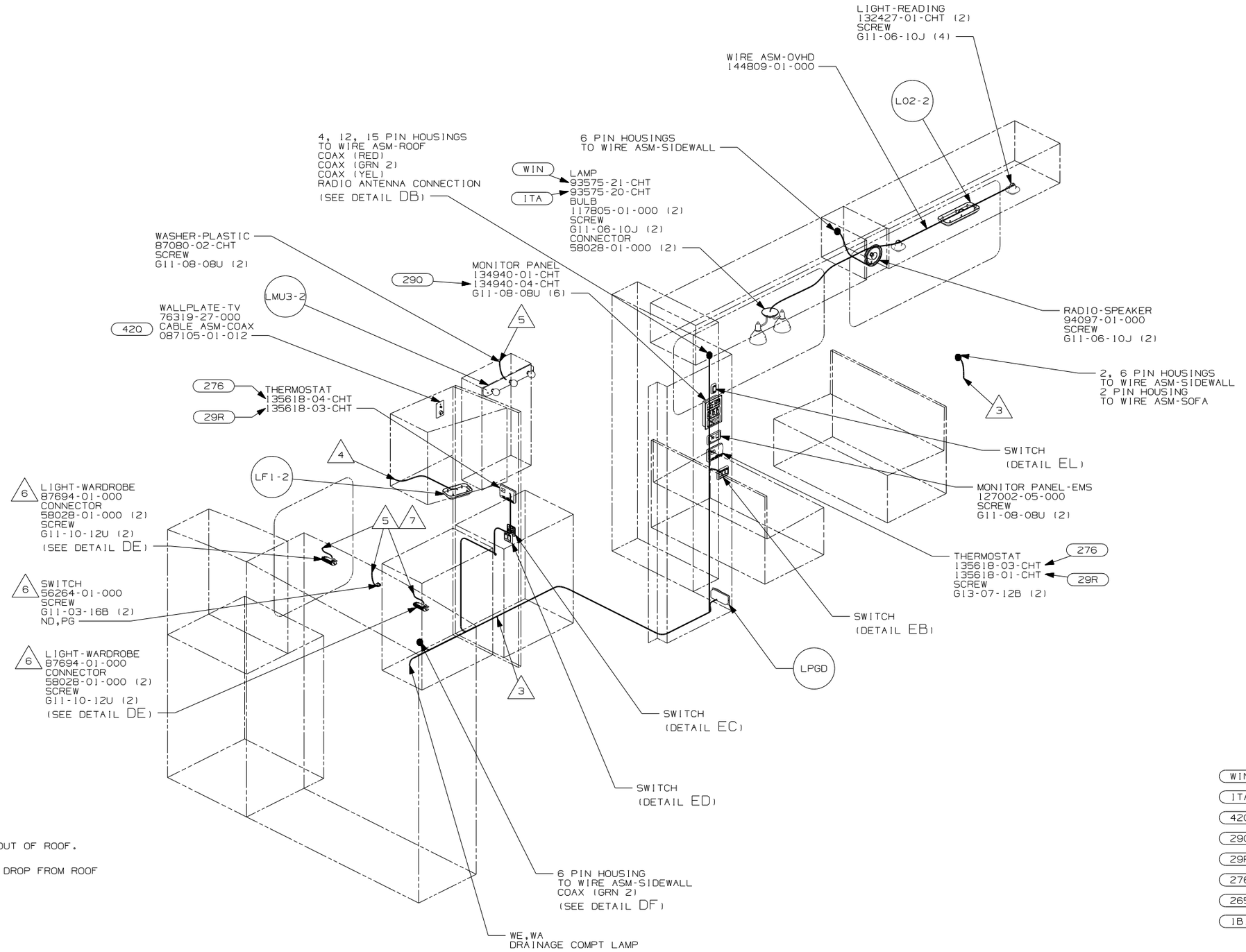

7 ADD CONDUIT 41953-07 TO WIRE OUT OF ROOF.

6 MOUNT DEVICE AS CLOSE TO WIRE DROP FROM ROOF AS POSSIBLE.

5 WIRE IN ROOF.

4 WIRE IN SIDEWALL.

3 WIRE PASSES THROUGH FLOOR AT THIS POINT.

2. SEE WIRING DIAGRAM-BODY,12V FOR ADDITIONAL INFORMATION.

1. ALL WIRES TO BE CLAMPED WITH CLAMP 10495-01-000 OR WIRE TIE 8343-02-000 EVERY 600MM, UNLESS OTHERWISE SPECIFIED.

NOTES:

WIN WINNEBAGO ONLY
ITA ITASCA ONLY
420 TV-19" COLOR
290 SOLAR PANEL - 10 WATT
29R HEAT PUMPS-2-HI EFF
276 A/C ROOF-HI EFF (2) W/EMS
265 CODES/STANDARDS - CSA/CMVSS
181 CODES/STANDARDS - USA

181 265

FOR ELECTRICAL TORQUE SPECIFICATIONS SEE DWG NO. 128783-01-000

X-X FOR ELECTRICAL CALLOUTS SEE DWG NO. 121339-01-000

FIRST USED 04 F34D

DO NOT SCALE DRAWING

TITLE: WIRING INSTL-BODY,12V

SHEET 2 PART NO 144612

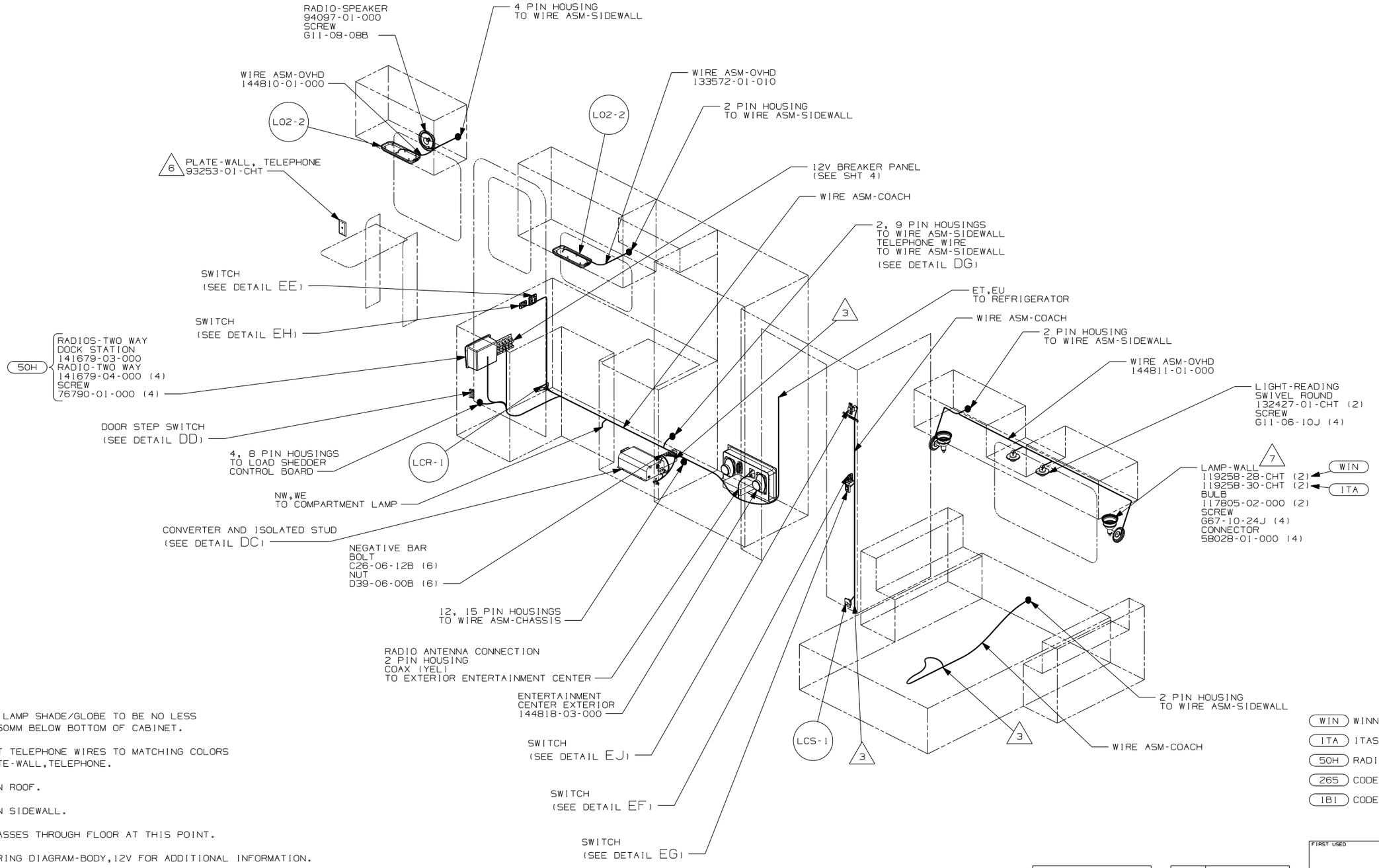

7 TOP OF LAMP SHADE/GLOBE TO BE NO LESS THEN 150MM BELOW BOTTOM OF CABINET.

6 CONNECT TELEPHONE WIRES TO MATCHING COLORS ON PLATE-WALL,TELEPHONE.

5 WIRE IN ROOF.

4 WIRE IN SIDEWALL.

3 WIRE PASSES THROUGH FLOOR AT THIS POINT.

2. SEE WIRING DIAGRAM-BODY,12V FOR ADDITIONAL INFORMATION.

1. ALL WIRES TO BE CLAMPED WITH CLAMP 10495-01-000 OR WIRE TIE 8343-02-000 EVERY 600MM, UNLESS OTHERWISE SPECIFIED.

NOTES:

FOR ELECTRICAL TORQUE SPECIFICATIONS SEE DWG NO. 128783-01-000

(X-X) FOR ELECTRICAL CALLOUTS SEE DWG NO. 121339-01-000

WIN WINNEBAGO ONLY

ITA ITASCA ONLY

50H RADIOS (4) - TWO-WAY

265 CODES/STANDARDS - CSA/CMVSS

1B1 CODES/STANDARDS - USA

1B1 265

FIRST USED 04 F34D

DO NOT SCALE DRAWING

TITLE: WIRING INSTL-BODY,12V

SHEET 3 PART NO 144612

DWG NO 144612

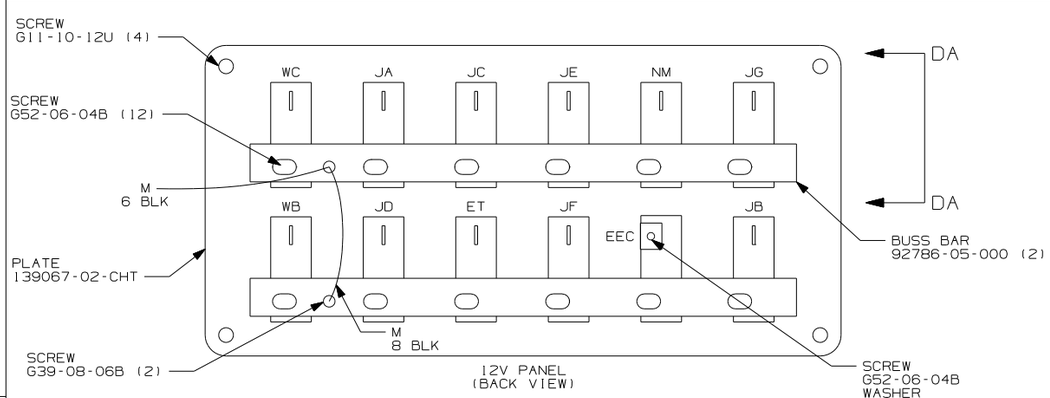

12V PANEL
(BACK VIEW)

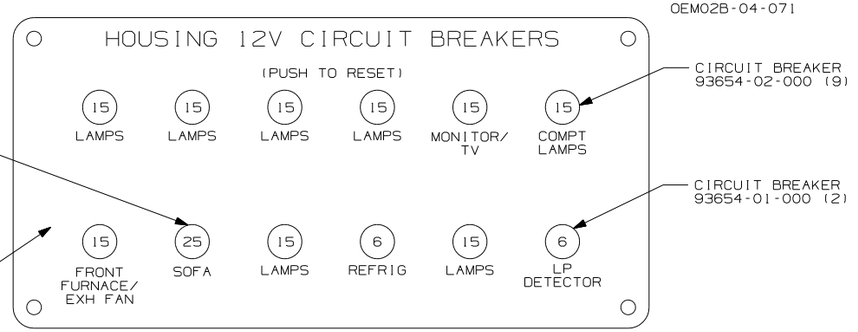

12V PANEL
(FRONT VIEW)

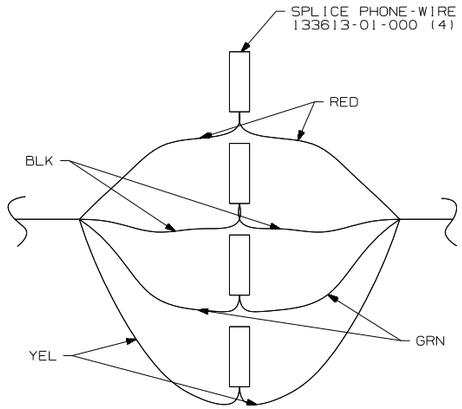

DETAIL DG

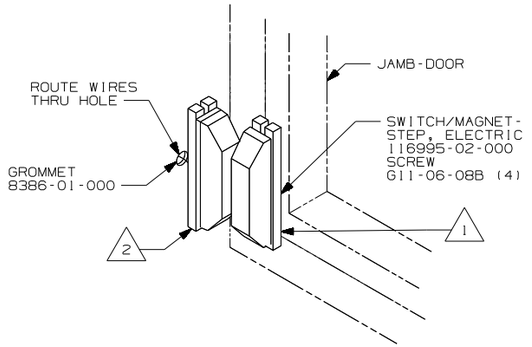

DETAIL DD

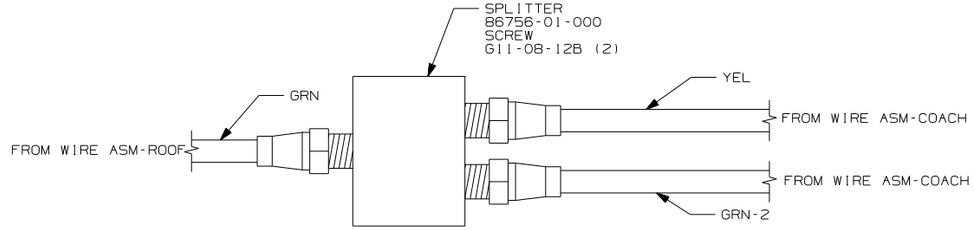

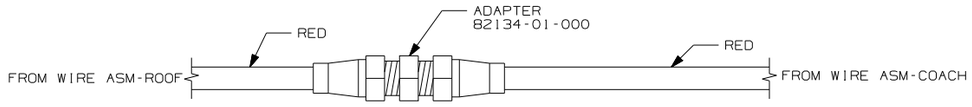

DETAIL DB

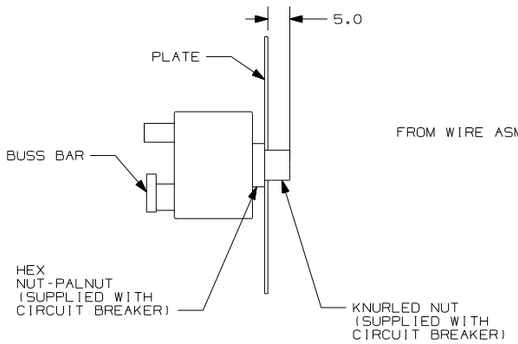

DETAIL DA

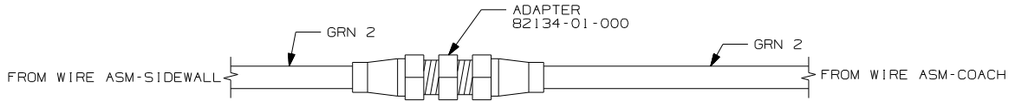

DETAIL DF

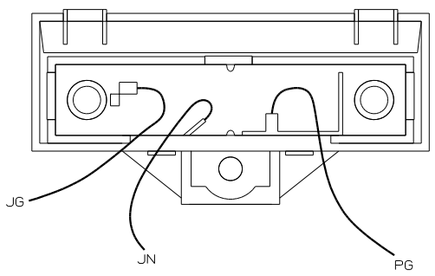

DETAIL DE

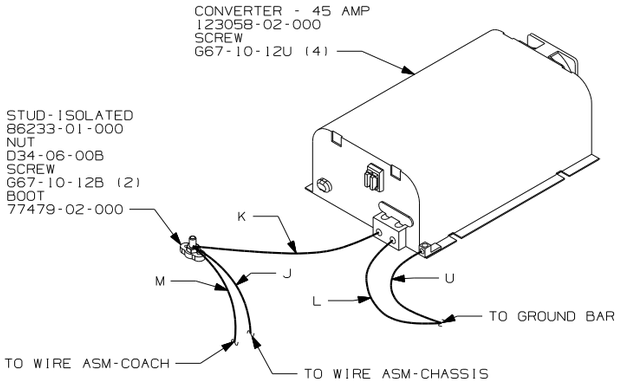

DETAIL DC 3

3 FOR POSITIONING DIMENSIONS SEE WIRING INSTL-BODY,110V SHT 4.

2 MOUNT SWITCH AND SPACER TO BLOCK ON JAMB ADJUST HEIGHT TO MATCH MAGNET.

1 MOUNT MAGNET USING PILOT HOLES IN SCREEN DOOR FRAME. MOUNT WITH MAGNET TOWARD SWITCH.

NOTES:

FOR ELECTRICAL TORQUE SPECIFICATIONS SEE DWG NO. 128783-01-000

X-X FOR ELECTRICAL CALLOUTS SEE DWG NO. 121339-01-000

265 CODES/STANDARDS - CSA/CMVSS

1B1 CODES/STANDARDS - USA

1B1 265

FIRST USED 04 F34D

DO NOT SCALE DRAWING

TITLE: WIRING INSTL-BODY,12V

SHEET 4

PART NO 144612

DWG NO 144612

SWITCH-BATTERY,DISC
108357-06-000
ACTUATOR-SWITCH
108356-11-CHT

SWITCH-MASTER COMPT
108357-01-000
ACTUATOR-SWITCH
108356-14-CHT

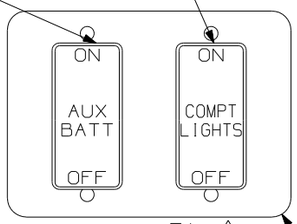

DETAIL EA (FRONT SIDE) △2

PLATE-SWITCH
98351-22-CHT
CHANNEL-HAT
135167-01-CHT
SCREW
G11-06-10U (4)

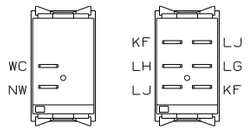

DETAIL EA (BACK SIDE) △2

SWITCH-BATTERY,DISC
108357-06-000
ACTUATOR-SWITCH
108356-11-CHT

SWITCH-MASTER COMPT
108357-01-000
ACTUATOR-SWITCH
108356-14-CHT

SWITCH-AWNING
108357-07-000
ACTUATOR
108356-12-CHT

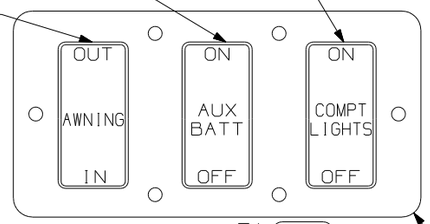

DETAIL EA (52N) (FRONT SIDE)

PLATE-SWITCH
98351-23-CHT
CHANNEL-HAT
135167-01-CHT
SCREW
G11-06-10U (6)

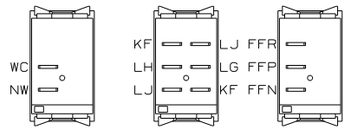

DETAIL EA (52N) (BACK SIDE)

SLIDEOUT CONTROL SWITCH
EXTEND
RETRACT

PLATE-SWITCH
144363-09-CHT
SWITCH
108357-06-CHT
ACTUATOR
108356-02-CHT
NUT
D65-08-00B (2)
LABEL
116220-01-000

WARNING
UNDERSTAND OPERATOR'S MANUAL BEFORE USING
KEEP PEOPLE AND OBSTRUCTIONS CLEAR OF
SLIDEOUT ROOM WHEN OPERATING TO AVOID
INJURY AND/OR PROPERTY DAMAGE

LABEL-WARNING
116549-01-000

DETAIL EJ (FRONT VIEW)

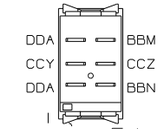

DETAIL EJ (REAR VIEW)

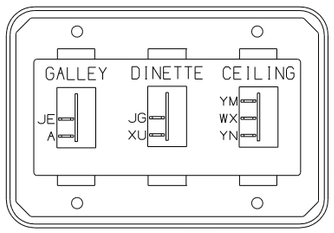

SWITCH-ROCKER
135740-01-CHT (2)
135740-02-CHT
SWITCH-BASE
135741-03-CHT
SWITCH-BEZEL
135742-27-CHT
SCREW
G11-08-08U (4)

DETAIL EB

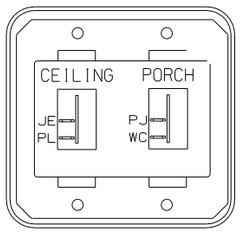

SWITCH-ROCKER
135740-01-CHT (2)
SWITCH-BASE
135741-02-CHT
SWITCH-BEZEL
135742-19-CHT
SCREW
G11-08-08U (4)

DETAIL EE

SWITCH-SERVICE LAMP
108357-01-000
ACTUATOR
108356-02-CHT

SWITCH-PUMP
108357-15-000
ACTUATOR
108356-04-CHT

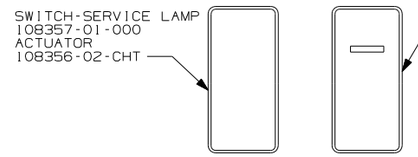

DETAIL EK (FRONT SIDE)

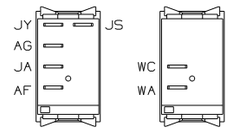

DETAIL EK (BACK SIDE)

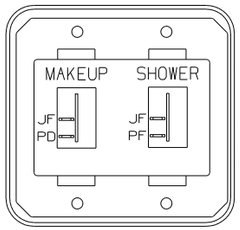

SWITCH-ROCKER
135740-01-CHT (2)
SWITCH-BASE
135741-02-CHT
SWITCH-BEZEL
135742-20-CHT
SCREW
G11-08-08U (4)

DETAIL EC

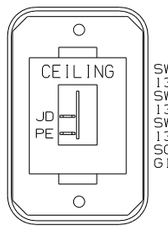

SWITCH-ROCKER
135740-01-CHT
SWITCH-BASE
135741-01-CHT
SWITCH-BEZEL
135742-07-CHT
SCREW
G11-08-08U (2)

DETAIL EF

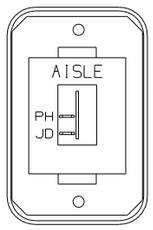

SWITCH-ROCKER
135740-01-CHT
SWITCH-BASE
135741-01-CHT
SWITCH-BEZEL
135742-06-CHT
SCREW
G11-08-08U (2)

DETAIL EG

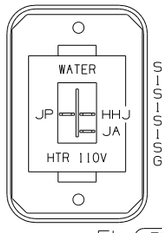

SWITCH-ROCKER
135740-06-CHT
SWITCH-BASE
135741-01-CHT
SWITCH-BEZEL
135742-35-CHT
SCREW
G11-08-08U (2)

DETAIL EL (53D)

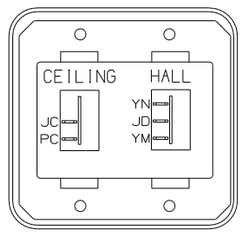

SWITCH-ROCKER
135740-01-CHT
135740-02-CHT
SWITCH-BASE
135741-02-CHT
SWITCH-BEZEL
135742-16-CHT
SCREW
G11-08-08U (4)

DETAIL ED

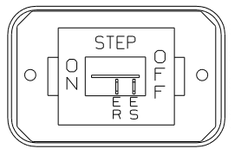

SWITCH-ROCKER
135740-01-CHT
SWITCH-BASE
135741-01-CHT
SWITCH-BEZEL
135742-11-CHT
SCREW
G11-08-08U (2)

DETAIL EH

(53D) WTR HTR-6GAL/ELE/LP/MOTORAID

(52N) AWNING - PATIO, ELECTRIC

(265) CODES/STANDARDS - CSA/CMVSS

(1B1) CODES/STANDARDS - USA

△2 WITHOUT (52N).

1. SWITCHES ARE TO BE INSTALLED AS SHOWN ON THIS DRAWING.

NOTES:

FOR ELECTRICAL TORQUE SPECIFICATIONS SEE DWG NO. 128783-01-000

(X-X) FOR ELECTRICAL CALLOUTS SEE DWG NO. 121339-01-000

(1B1) (265)

FIRST USED 04 F34D

DO NOT SCALE DRAWING

TITLE: WIRING INSTL-BODY,12V

SHEET 5

PART NO 144612

DWG NO 144612

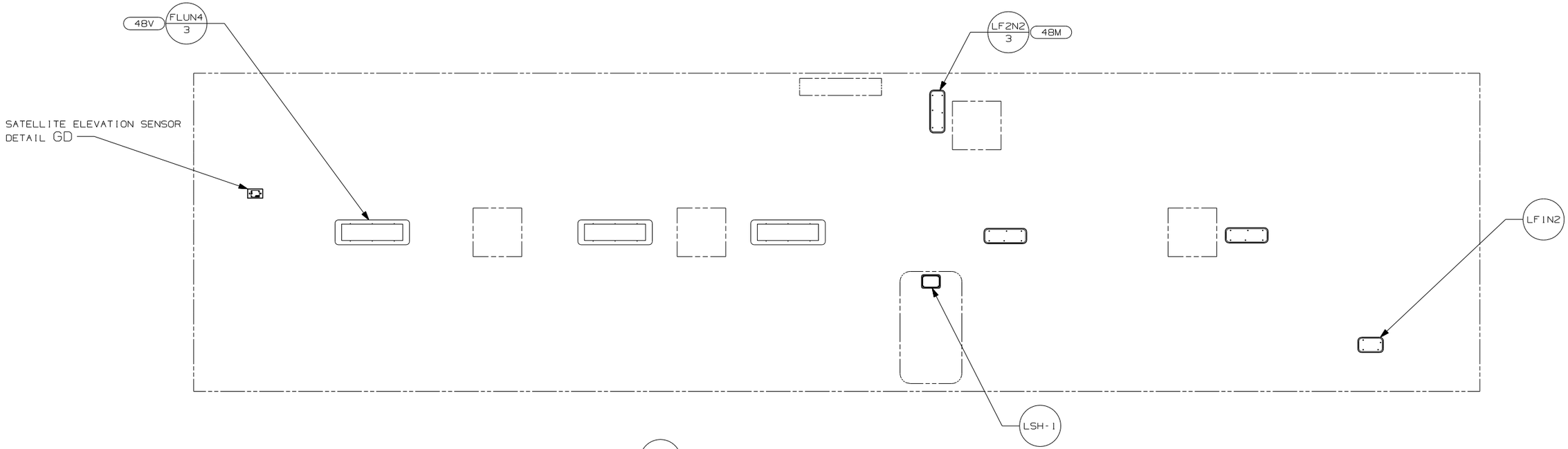

4 LAMP LOCATED IN POWER CORD COMPARTMENT.

3 LAMP LOCATED IN WATER HEATER COMPARTMENT.

2 LAMP LOCATED IN SERVICE COMPARTMENT.

1 LAMPS LOCATED IN SLIDEOUT.

NOTES:

FOR ELECTRICAL TORQUE SPECIFICATIONS SEE DWG NO. 128783-01-000

X-X FOR ELECTRICAL CALLOUTS SEE DWG NO. 121339-01-000

48V LIGHTS-FLOURESCENT

48M LIGHTS-INCANDESCENT

265 CODES/STANDARDS - CSA/CMVSS

181 CODES/STANDARDS - USA

181 265

FIRST USED 04 F34D

DO NOT SCALE DRAWING

TITLE: WIRING INSTL-BODY,12V

SHEET 6

PART NO 144612

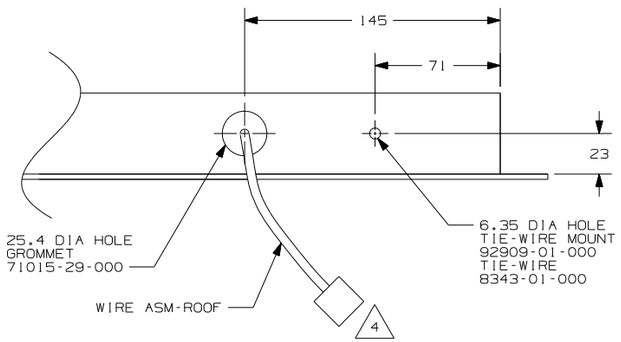

VIEW GC-GC

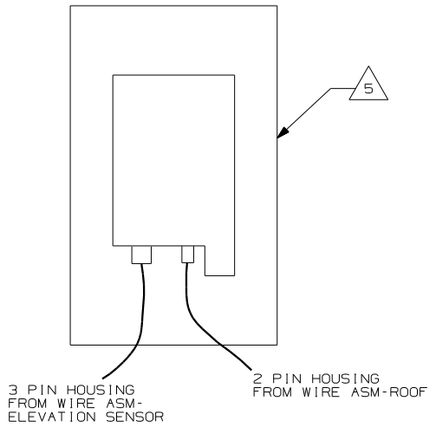

DETAIL GD

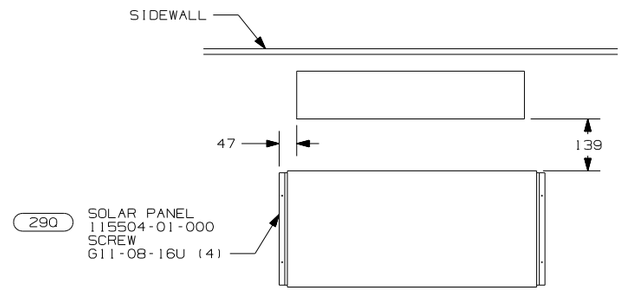

VIEW GB-GB

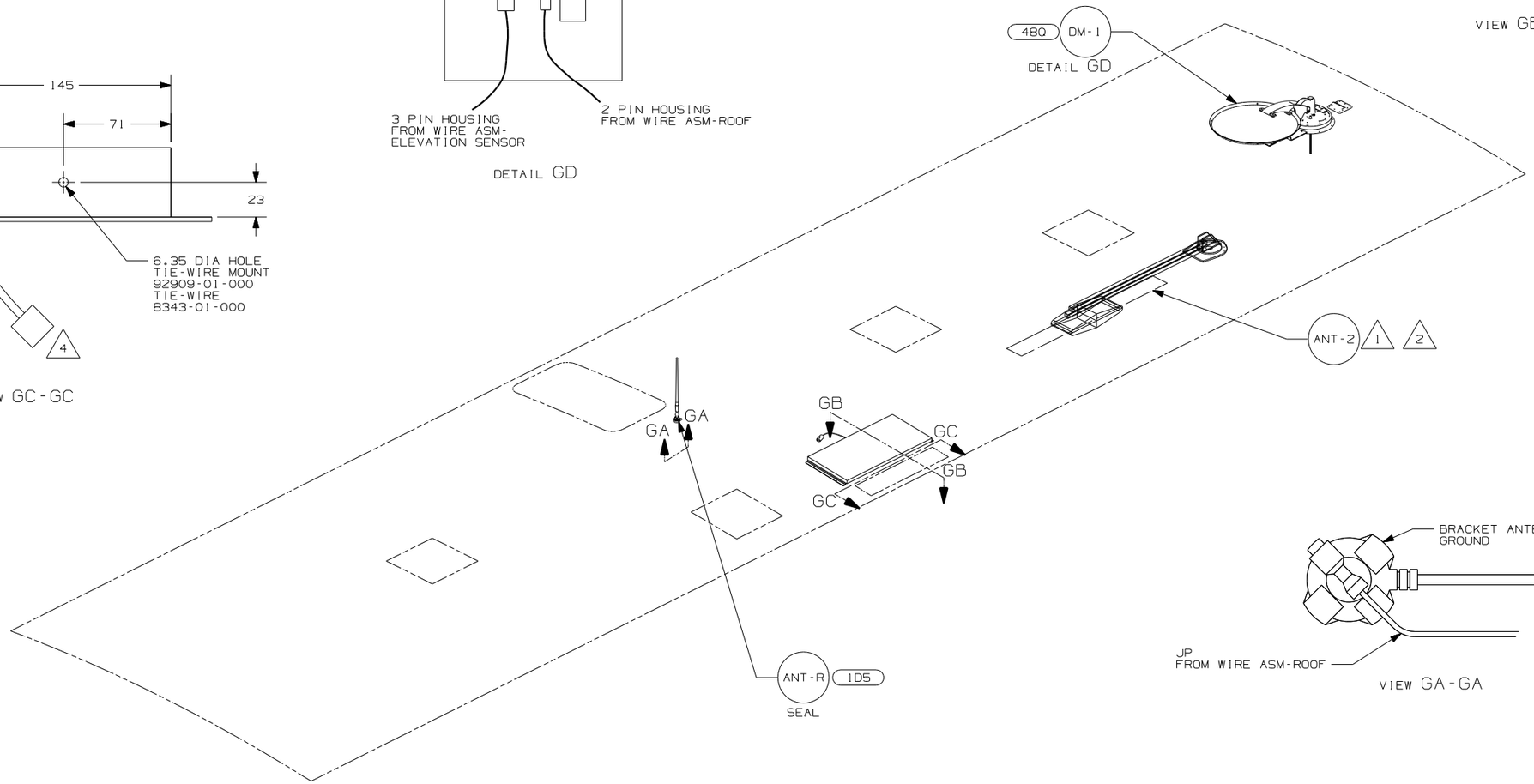

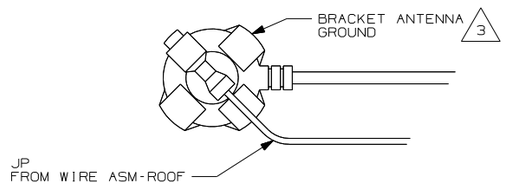

VIEW GA-GA

NOTES:

5 SENSOR SUPPLIED WITH SATELLITE ASSEMBLY.

4 FASTEN TO VENT.

3 WRAP BRACKET LEGS AROUND ANTENNA BASE.

2 ADD RUBBER BUMPERS TO ROOF UNDER EACH END OF ANTENNA TO PREVENT CONTACT WITH ROOF.

1 SEE DWG 76319-01-000 FOR INSTALLATION OF TV ANTENNA.

480 SATELLITE DISH & ELEV.SENSOR
290 SOLAR PANEL-10 WATT
1D5 ENTERTAINMENT CENTR/EXT W/CD
265 CODES/STANDARDS - CSA/CMVSS
1B1 CODES/STANDARDS - USA

1B1 265

FOR ELECTRICAL TORQUE SPECIFICATIONS SEE DWG NO. 128783-01-000

X-X FOR ELECTRICAL CALLOUTS SEE DWG NO. 121339-01-000

FIRST USED 04 F34D

DO NOT SCALE DRAWING

TITLE: WIRING INSTL-BODY,12V

SHEET 7 PART NO 144612

RELEASE	REV A	DATE	DWG NO 146761

REV	ZONE	REVISION RECORD	DATE	DFTR-ORIG

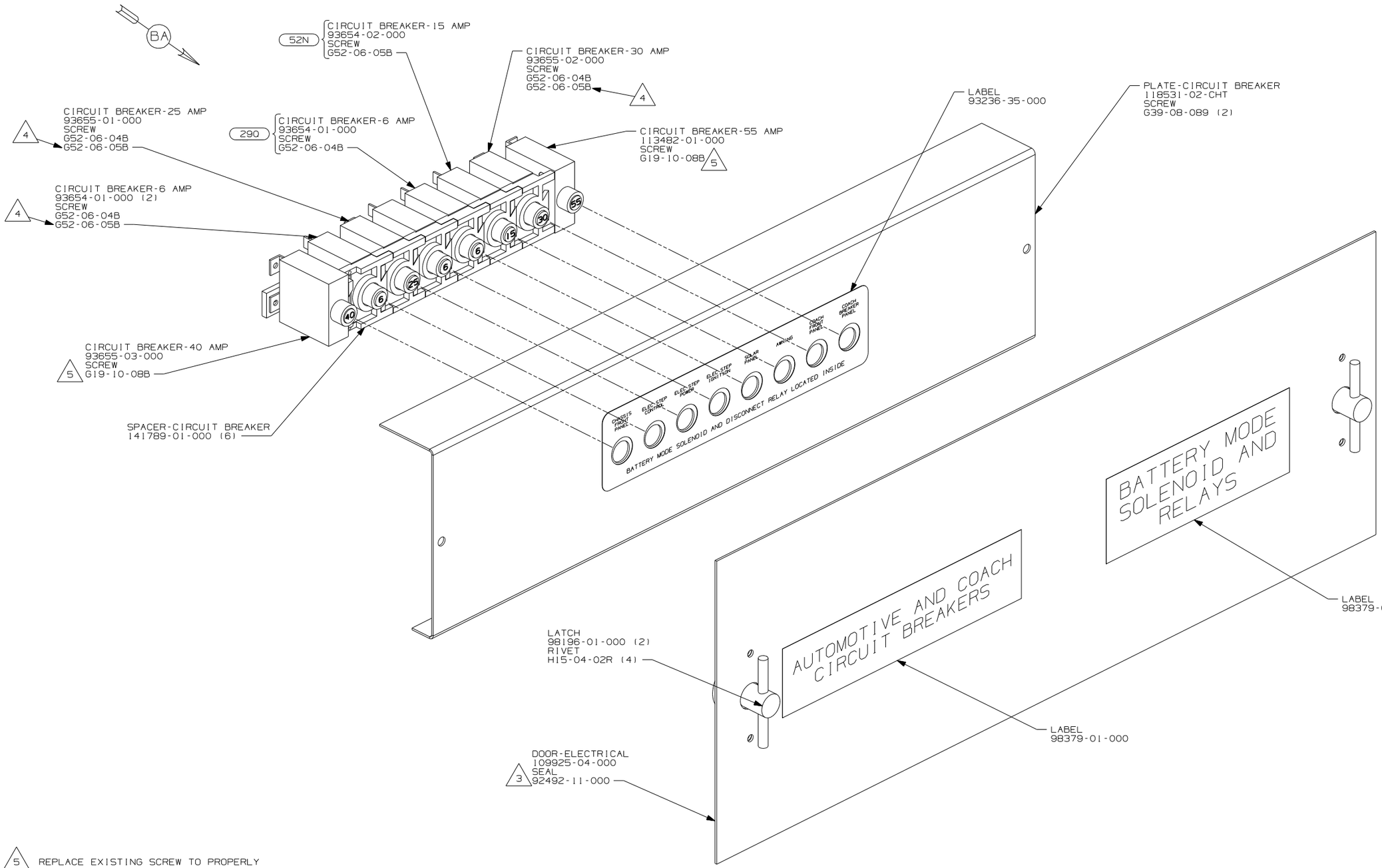

290 SOLAR PANEL-10 WATT

52N AWNING - PATIO, ELECTRIC

265 CODES/STANDARDS - CSA/CMVSS

1B1 CODES/STANDARDS - USA

1B1 265

5 REPLACE EXISTING SCREW TO PROPERLY ATTACH BREAKER TO BUSS BAR.

4 USE THE LONGER SCREW TO PROPERLY ATTACH BREAKER TO BUSS BAR.

3 PLACE AROUND ENTIRE PERIMETER OF DOOR WITH SEAM AT BOTTOM.

2. SECURE CONDUIT 41953-09, -10, -11, -13, AND -14 OVER ALL WIRES IN CONTACT WITH SHARP EDGES.

1. LEGEND: ———— WINNEBAGO: ---------- CABLE: —— —— —— CHASSIS SUPPLIED WIRING.

NOTES:

COPYRIGHT 2004 WINNEBAGO INDUSTRIES, INC.

DFTR	ORIG. DATE
CHKR	ALL DIMENSIONS ARE IN MILLIMETERS
P.E.	
M.E.	FIRST USED
DSNR	04 F & G-SERIES

UNSPECIFIED TOLERANCES ARE:
WHOLE DIM (X) ±
ONE-PLACE (X.X) ±
TWO-PLACE (X.XX) ±
ANGLE ±

THIRD ANGLE PROJECTION

MATERIAL:

DO NOT SCALE DRAWING

TITLE: CHASSIS ELECTRICAL BOX ASM

SHEET 1 OF 2 | PART NO 146761

DWG NO 146761

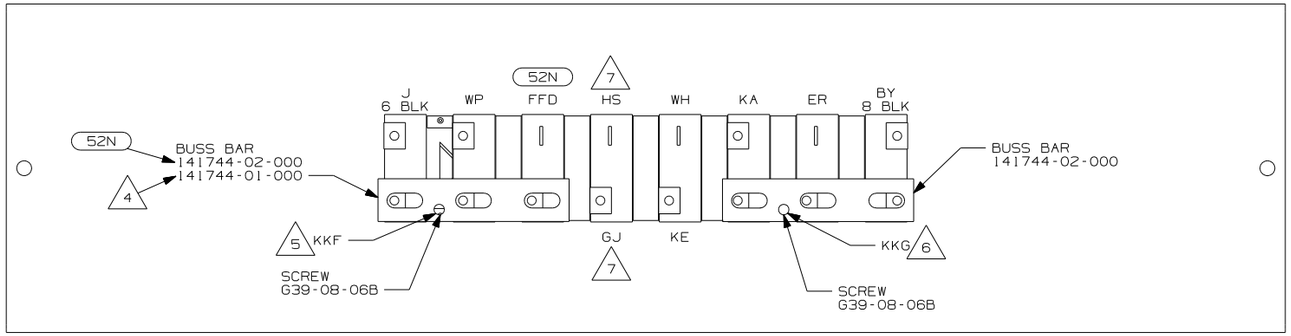

DETAIL BA

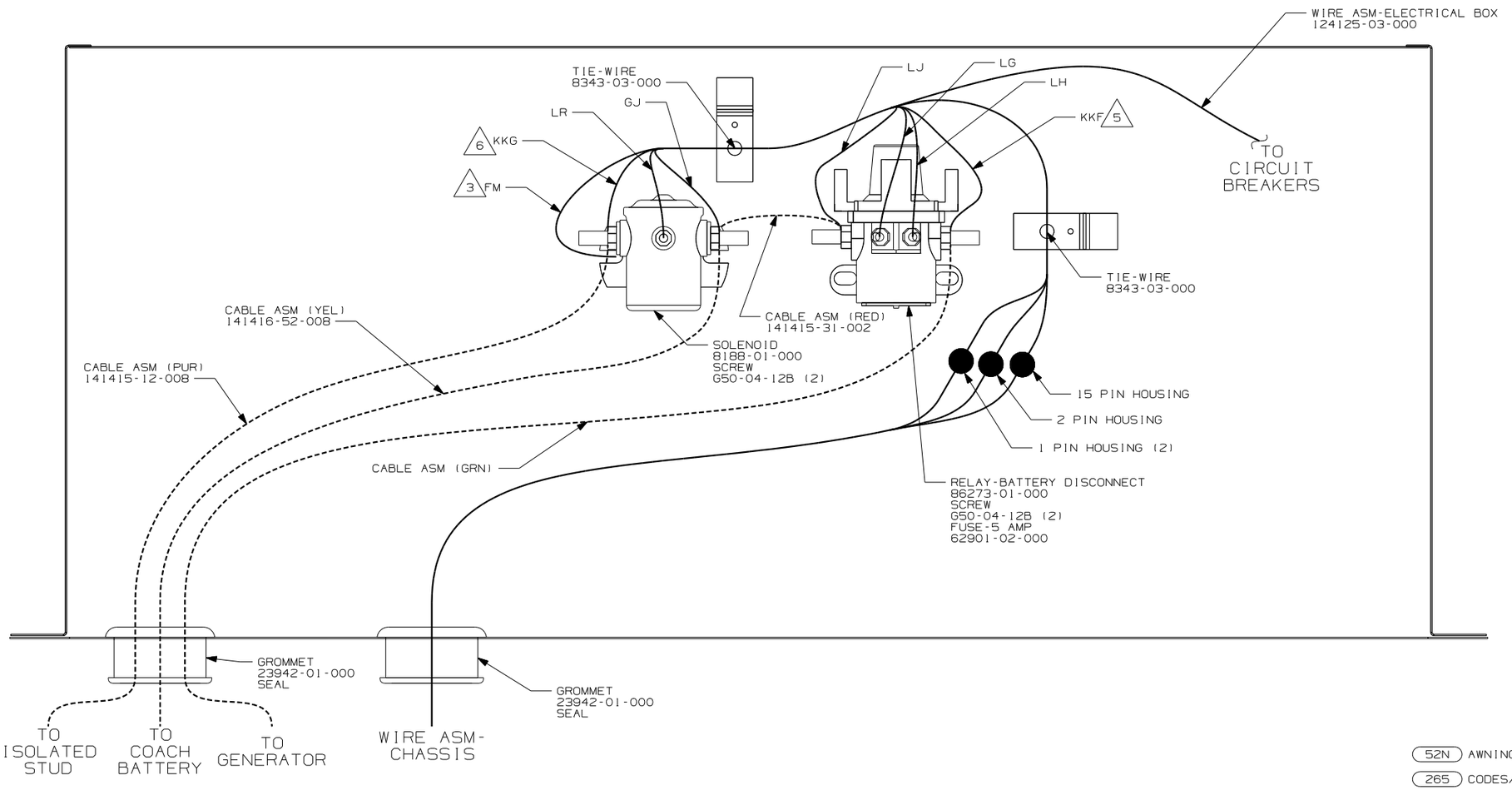

7 IF CIRCUIT IS NOT USED, TAPE BACK TO HARNESS.

6 WIRE MARKED WITH PURPLE TAPE.

5 WIRE MARKED WITH YELLOW TAPE.

4 WITHOUT (52N)

3 SECURE WITH SOLENOID MOUNTING SCREW.

2. SECURE CONDUIT 41953-09, -10, -11, -13, AND -14 OVER ALL WIRES IN CONTACT WITH SHARP EDGES.

1. LEGEND: ———— WINNEBAGO: ---------- CABLE: ———— CHASSIS SUPPLIED WIRING.

NOTES:

(52N) AWNING - PATIO, ELECTRIC

(265) CODES/STANDARDS - CSA/CMVSS

(181) CODES/STANDARDS - USA

(181) (265)

FIRST USED
04 F & G-SERIES

DO NOT SCALE DRAWING

TITLE:
CHASSIS ELECTRICAL BOX ASM

SHEET 2 | PART NO 146761

RELEASE	REV A	DATE	DWG NO 144611
REV	ZONE	REVISION RECORD	DATE	DFTR-ORIG

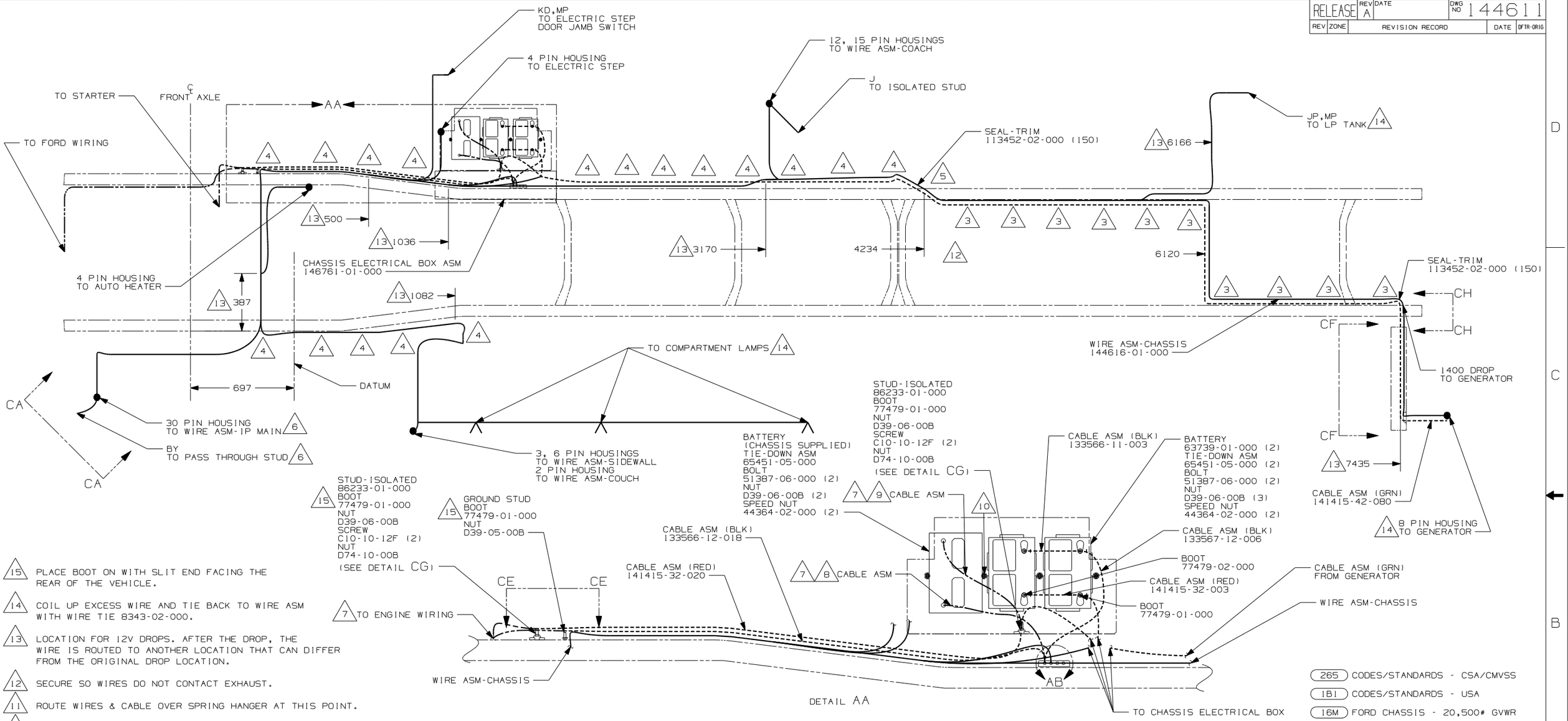

15 PLACE BOOT ON WITH SLIT END FACING THE REAR OF THE VEHICLE.

14 COIL UP EXCESS WIRE AND TIE BACK TO WIRE ASM WITH WIRE TIE 8343-02-000.

13 LOCATION FOR 12V DROPS. AFTER THE DROP, THE WIRE IS ROUTED TO ANOTHER LOCATION THAT CAN DIFFER FROM THE ORIGINAL DROP LOCATION.

12 SECURE SO WIRES DO NOT CONTACT EXHAUST.

11 ROUTE WIRES & CABLE OVER SPRING HANGER AT THIS POINT.

10 USE TWO NUTS HERE TO ACCOUNT FOR BATTERY HEIGHT DIFFERENCE.

9 LOCATE CHASSIS SUPPLIED RED WIRES TO ISOLATED STUD, CUT AND ADD TERMINALS 68070-01-000 (2) TO THE CUT ENDS.

8 LOCATE CHASSIS SUPPLIED GROUND WIRES TO GROUND STUD, CUT AND ADD TERMINALS 8348-01-000 (2) TO THE CUT ENDS.

7 SUPPLIED WITH CHASSIS.

6 SEE WIRING INSTL-FRONT END FOR ADDITIONAL INFORMATION.

5 ROUTE WIRES & CABLE INSIDE CHASSIS RAIL AT THIS POINT AND TO THE REAR.

4 CLAMP 83610-03-000, SCREW G39-08-12B.

3 CLAMP 83610-01-000, SCREW G39-08-12B.

2. SECURE CONDUIT 41953-09, -10, -11, -13, AND -14 OVER ALL WIRES IN CONTACT WITH SHARP EDGES.

1. LEGEND: ———— WINNEBAGO: ---------- CABLE: ———————— CHASSIS SUPPLIED WIRING.

NOTES:

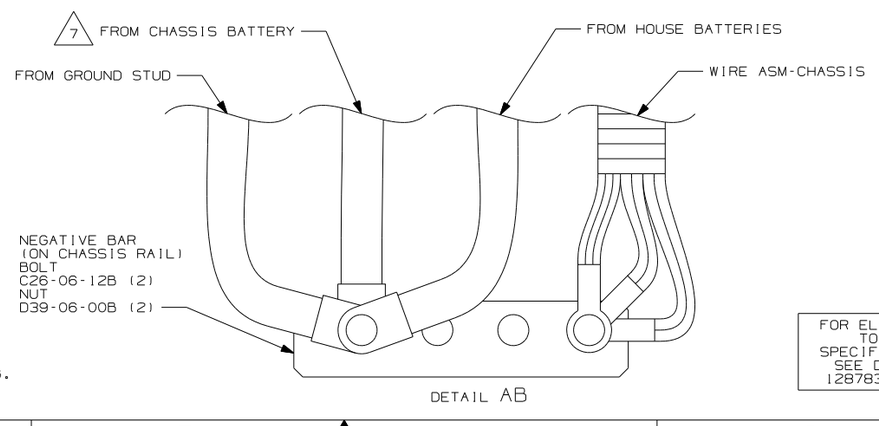

265 CODES/STANDARDS - CSA/CMVSS

1B1 CODES/STANDARDS - USA

16M FORD CHASSIS - 20,500# GVWR

16M 1B1 265

FOR ELECTRICAL TORQUE SPECIFICATIONS SEE DWG NO. 128783-01-000

X-X FOR ELECTRICAL CALLOUTS SEE DWG NO. 121339-01-000

COPYRIGHT 2003 WINNEBAGO INDUSTRIES, INC.

WINNEBAGO

DFTR	ORIG. DATE
CHKR	ALL DIMENSIONS ARE IN MILLIMETERS
P.E.	
M.E.	FIRST USED 04 F34D
DSNR	

UNSPECIFIED TOLERANCES ARE:
WHOLE DIM (X) : 1
ONE-PLACE (X.X) : 1.5
TWO-PLACE (X.XX) : 0.50
ANGLE : 1°

MATERIAL:

THIRD ANGLE PROJECTION

DO NOT SCALE DRAWING

TITLE: WIRING INSTL-CHASSIS

SHEET 1 OF 3 | PART NO 144611

DWG NO 144611

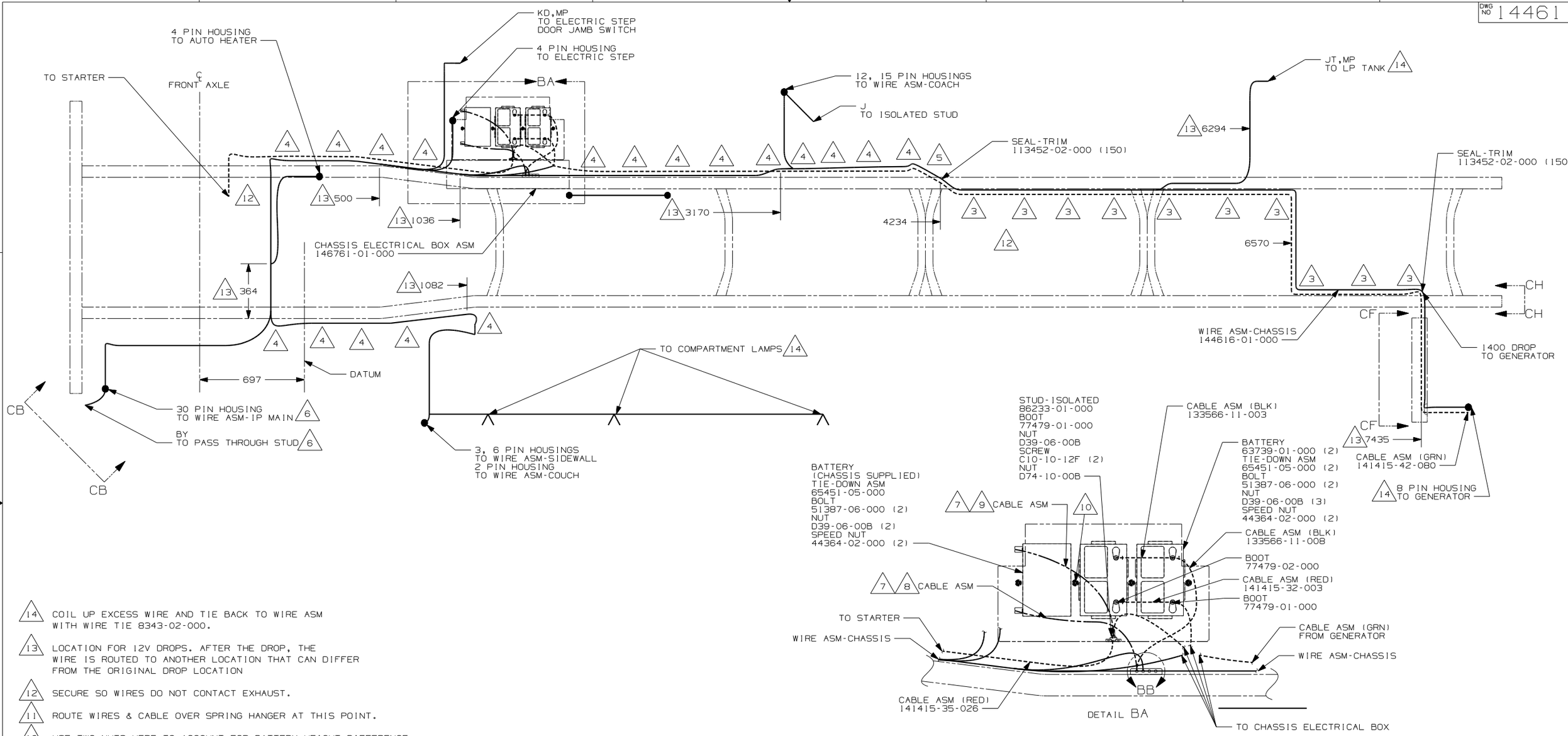

DETAIL BA

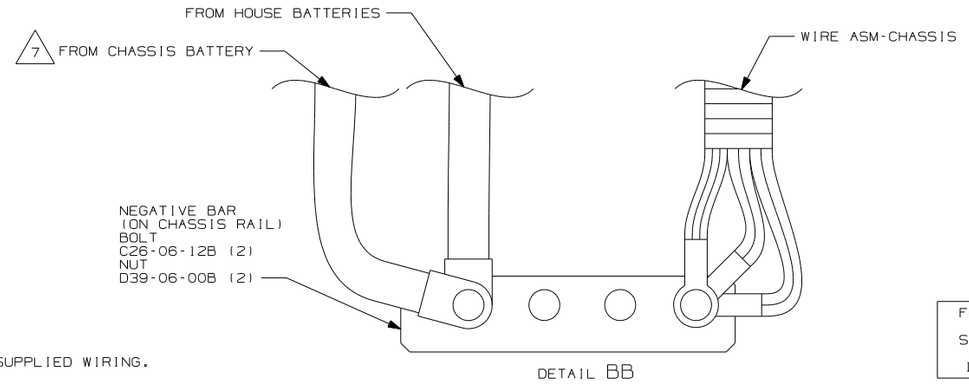

DETAIL BB

14 COIL UP EXCESS WIRE AND TIE BACK TO WIRE ASM WITH WIRE TIE 8343-02-000.

13 LOCATION FOR 12V DROPS. AFTER THE DROP, THE WIRE IS ROUTED TO ANOTHER LOCATION THAT CAN DIFFER FROM THE ORIGINAL DROP LOCATION

12 SECURE SO WIRES DO NOT CONTACT EXHAUST.

11 ROUTE WIRES & CABLE OVER SPRING HANGER AT THIS POINT.

10 USE TWO NUTS HERE TO ACCOUNT FOR BATTERY HEIGHT DIFFERENCE.

9 LOCATE CHASSIS SUPPLIED RED WIRES TO ISOLATED STUD, CUT AND ADD TERMINAL 68070-01-000 TO THE CUT END.

8 LOCATE CHASSIS SUPPLIED GROUND WIRES TO GROUND BAR, CUT AND ADD TERMINAL 8348-01-000 TO THE CUT END.

7 SUPPLIED WITH CHASSIS.

6 SEE WIRING INSTL-FRONT END FOR ADDITIONAL INFORMATION.

5 ROUTE WIRES & CABLE INSIDE CHASSIS RAIL AT THIS POINT AND TO THE REAR.

4 CLAMP 83610-03-000, SCREW G39-08-12B.

3 CLAMP 83610-01-000, SCREW G39-08-12B.

2. SECURE CONDUIT 41953-09, -10, -11, -13, AND -14 OVER ALL WIRES IN CONTACT WITH SHARP EDGES.

1. LEGEND: ———— WINNEBAGO: ---------- CABLE: —·——·—— CHASSIS SUPPLIED WIRING.

NOTES:

265 CODES/STANDARDS - CSA/CMVSS

1PN WORKHORSE CHASSIS - 20,700# GVWR

1B1 CODES/STANDARDS - USA

1B1 1PN 265

FOR ELECTRICAL TORQUE SPECIFICATIONS SEE DWG NO. 128783-01-000

X-X FOR ELECTRICAL CALLOUTS SEE DWG NO. 121339-01-000

FIRST USED	04 F34D
	DO NOT SCALE DRAWING
TITLE:	WIRING INSTL-CHASSIS
SHEET 2	PART NO 144611

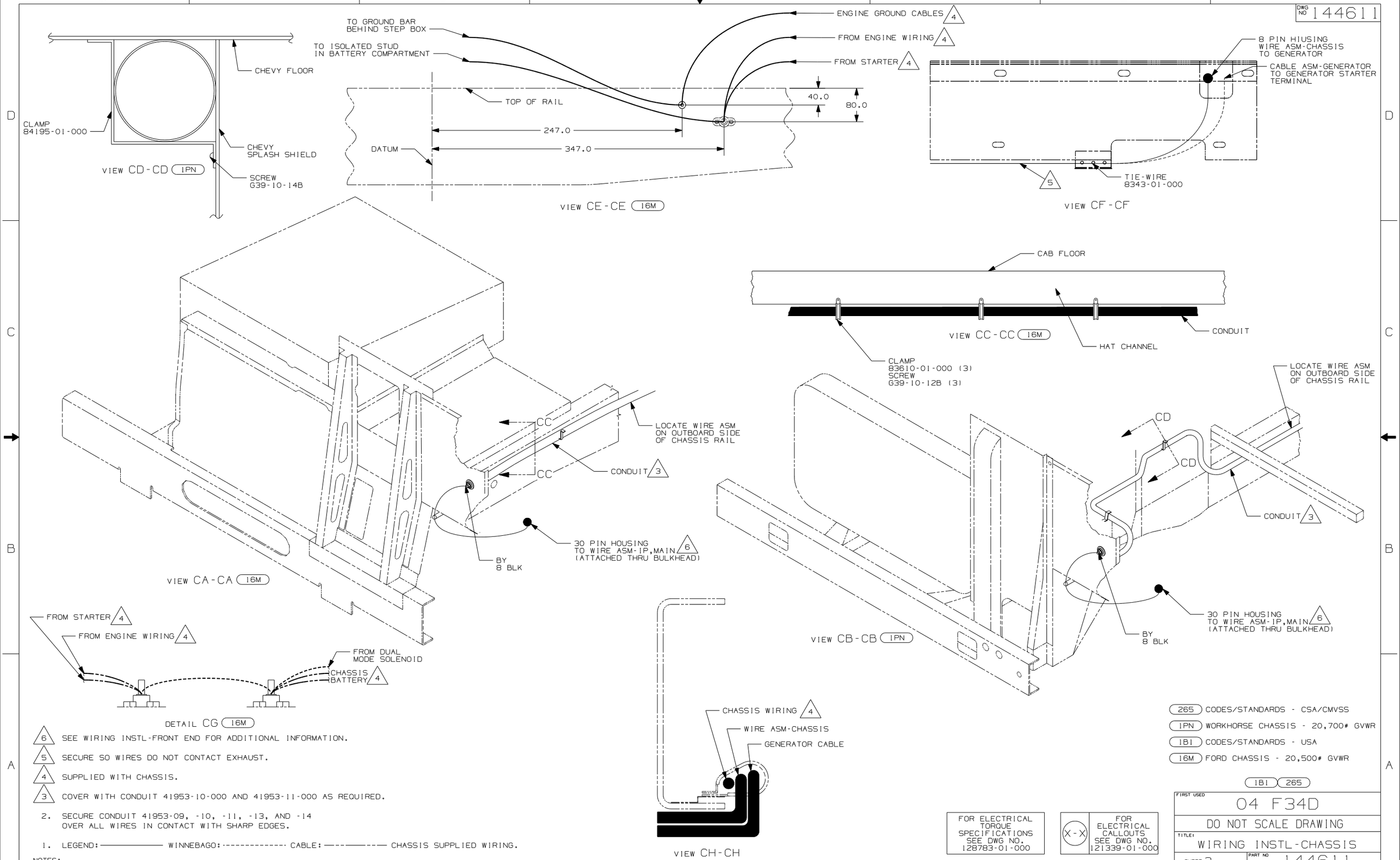
DWG NO 144611
TO GROUND BAR BEHIND STEP BOX
TO ISOLATED STUD IN BATTERY COMPARTMENT
ENGINE GROUND CABLES 4
FROM ENGINE WIRING 4
FROM STARTER 4
CHEVY FLOOR
CLAMP 84195-01-000
CHEVY SPLASH SHIELD
SCREW G39-10-14B
VIEW CD-CD 1PN
TOP OF RAIL
40.0
80.0
247.0
347.0
DATUM
VIEW CE-CE 16M
8 PIN HIUSING WIRE ASM-CHASSIS TO GENERATOR
CABLE ASM-GENERATOR TO GENERATOR STARTER TERMINAL
5
TIE-WIRE 8343-01-000
VIEW CF-CF
CAB FLOOR
CONDUIT
HAT CHANNEL
VIEW CC-CC 16M
CLAMP 83610-01-000 (3)
SCREW G39-10-12B (3)
LOCATE WIRE ASM ON OUTBOARD SIDE OF CHASSIS RAIL
CC
CC
CONDUIT 3
30 PIN HOUSING TO WIRE ASM-IP,MAIN 6 (ATTACHED THRU BULKHEAD)
BY 8 BLK
VIEW CA-CA 16M
CD
CD
CONDUIT 3
30 PIN HOUSING TO WIRE ASM-IP,MAIN 6 (ATTACHED THRU BULKHEAD)
BY 8 BLK
VIEW CB-CB 1PN
FROM STARTER 4
FROM ENGINE WIRING 4
FROM DUAL MODE SOLENOID
CHASSIS BATTERY 4
DETAIL CG 16M
CHASSIS WIRING 4
WIRE ASM-CHASSIS
GENERATOR CABLE
VIEW CH-CH
265 CODES/STANDARDS - CSA/CMVSS
1PN WORKHORSE CHASSIS - 20,700# GVWR
1B1 CODES/STANDARDS - USA
16M FORD CHASSIS - 20,500# GVWR
1B1 265
6 SEE WIRING INSTL-FRONT END FOR ADDITIONAL INFORMATION.
5 SECURE SO WIRES DO NOT CONTACT EXHAUST.
4 SUPPLIED WITH CHASSIS.
3 COVER WITH CONDUIT 41953-10-000 AND 41953-11-000 AS REQUIRED.
2. SECURE CONDUIT 41953-09, -10, -11, -13, AND -14 OVER ALL WIRES IN CONTACT WITH SHARP EDGES.
1. LEGEND: WINNEBAGO: CABLE: CHASSIS SUPPLIED WIRING.
NOTES:
FOR ELECTRICAL TORQUE SPECIFICATIONS SEE DWG NO. 128783-01-000
X-X FOR ELECTRICAL CALLOUTS SEE DWG NO. 121339-01-000
FIRST USED 04 F34D
DO NOT SCALE DRAWING
TITLE: WIRING INSTL-CHASSIS
SHEET 3
PART NO 144611

DWG NO	SHEET
145057-01	1
145057-02	2
145057-03	3
145057-04	4
145057-05	5
145057-06	6
145057-07	7
145057-08	8

RELEASE	REV A	DATE	DWG NO 145057

REV	ZONE	REVISION RECORD	DATE	DFTR-ORIG

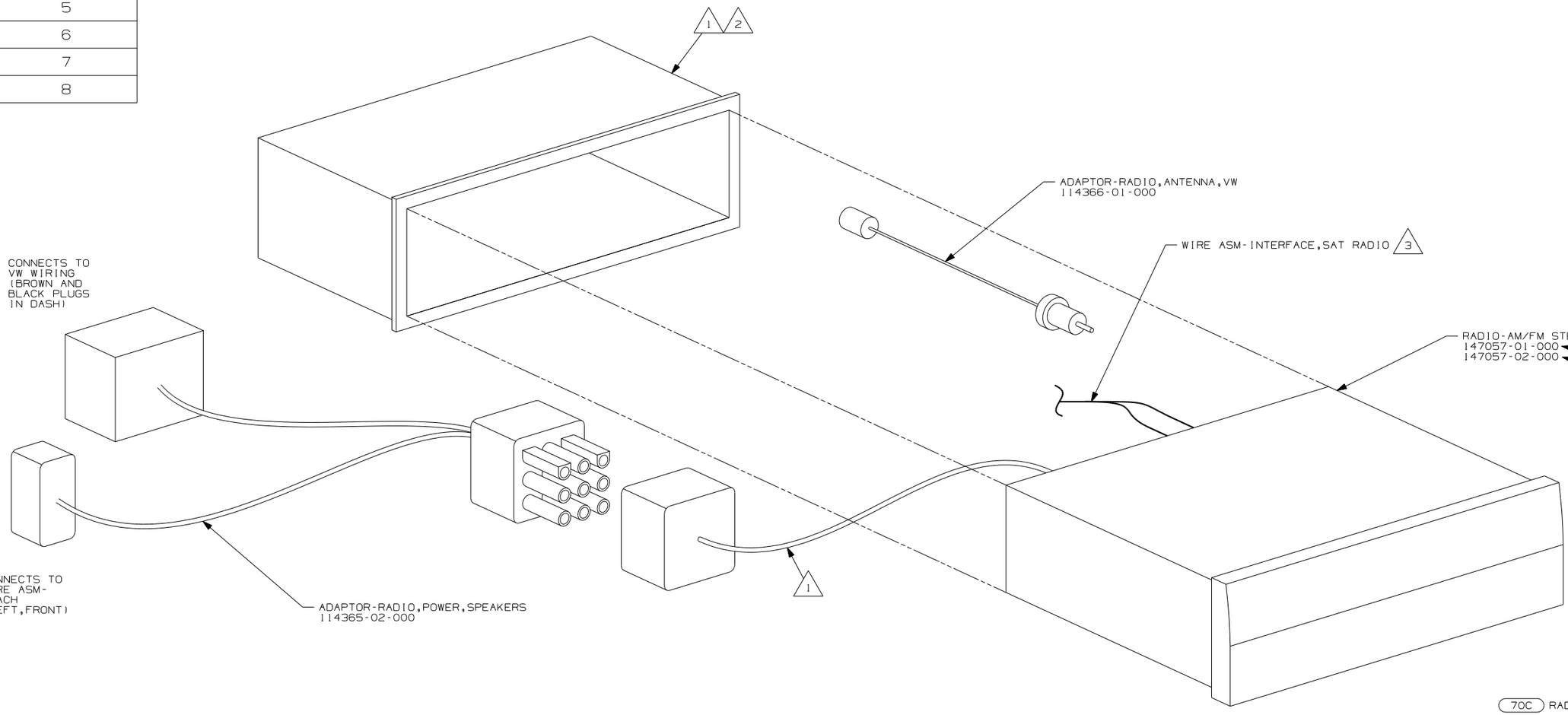

70C RADIO - SATELLITE

19V RADIO-AM/FM STEREO CD PLAYER

H-BODY, B-VAN, 200 SERIES

COPYRIGHT 2004
WINNEBAGO
INDUSTRIES, INC.

DFTR	ORIG. DATE
CHKR	ALL DIMENSIONS ARE IN MILLIMETERS
P.E.	
M.E.	FIRST USED
DSNR	04 MOTORHOMES

UNSPECIFIED TOLERANCES ARE:
WHOLE DIM (X) :
ONE-PLACE (X.X) :
TWO-PLACE (X.XX) :
ANGLE :

MATERIAL:

THIRD ANGLE PROJECTION

DO NOT SCALE DRAWING

TITLE: RADIO INSTL

SHEET 1 OF 8 | PART NO 145057

3 TO SATELLITE RECEIVER. SEE WIRING INSTL-FRONT END FOR ADDITIONAL INFORMATION.

2 BEND TABS ON ALL 4 SIDES TO SECURE MOUNTING BRACKET TO DASH OPENING.

1 SUPPLIED WITH RADIO

NOTES:

DWG NO 145057

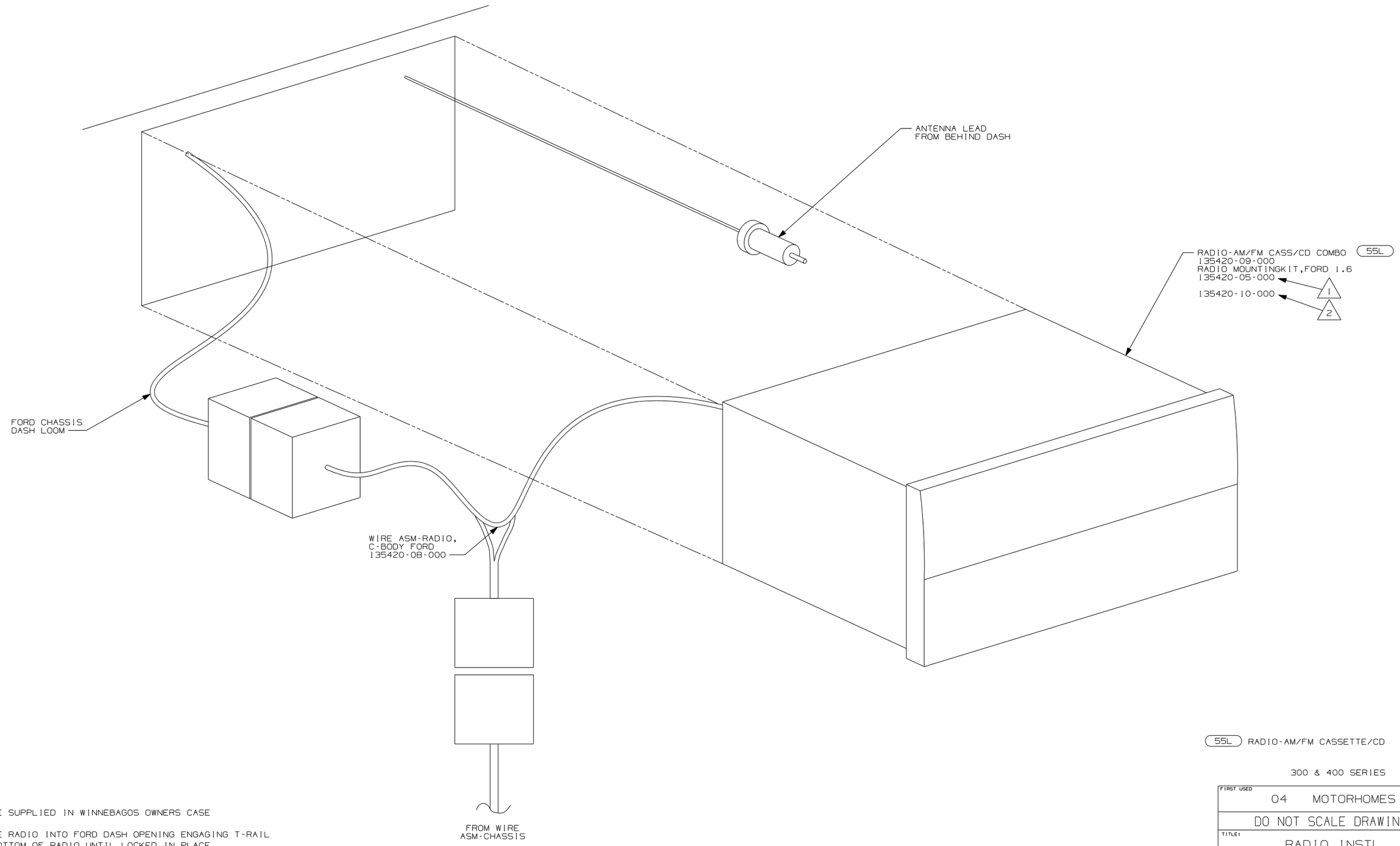

55L RADIO-AM/FM CASSETTE/CD

300 & 400 SERIES

2 TO BE SUPPLIED IN WINNEBAGOS OWNERS CASE

1 SLIDE RADIO INTO FORD DASH OPENING ENGAGING T-RAIL ON BOTTOM OF RADIO UNTIL LOCKED IN PLACE.

NOTES:

FIRST USED	04 MOTORHOMES
	DO NOT SCALE DRAWING
TITLE:	RADIO INSTL
SHEET 2	PART NO 145057

DWG NO 145057

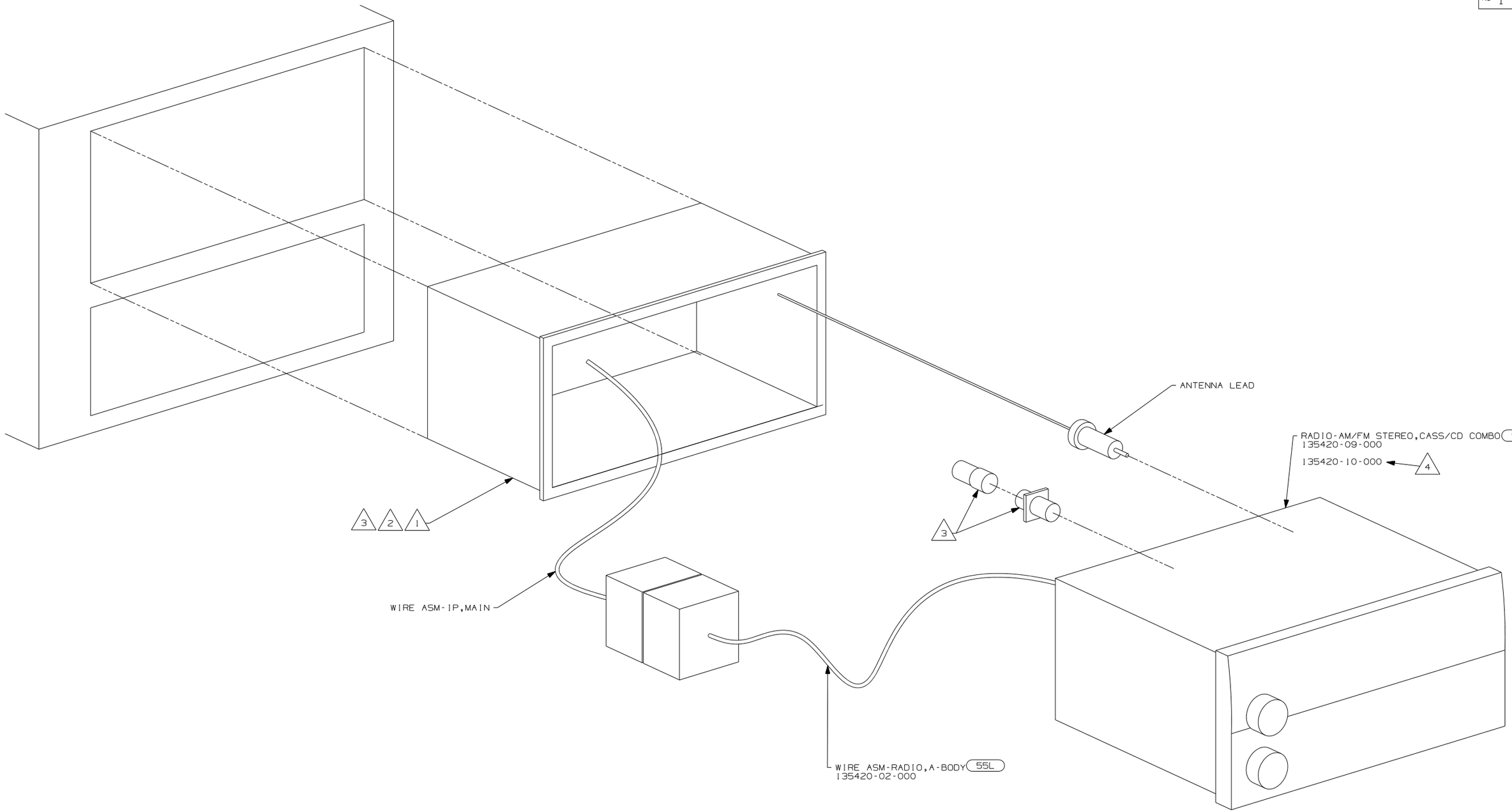

4 TO BE SUPPLIED IN WINNEBAGOS OWNERS CASE

3 SUPPLIED WITH MOUNTING KIT 135420-07-000 (55L) ONLY.

2 BEND TABS ON ALL 4 SIDES TO SECURE MOUNTING BRACKET TO DASH OPENING.

1 SUPPLIED WITH RADIO (24N) ONLY.

NOTES:

(55L) RADIO-AM/FM CASSETTE/CD

D SERIES

FIRST USED: 04 MOTORHOMES	
DO NOT SCALE DRAWING	
TITLE: RADIO INSTL	
SHEET 3	PART NO 145057

DWG NO 145057

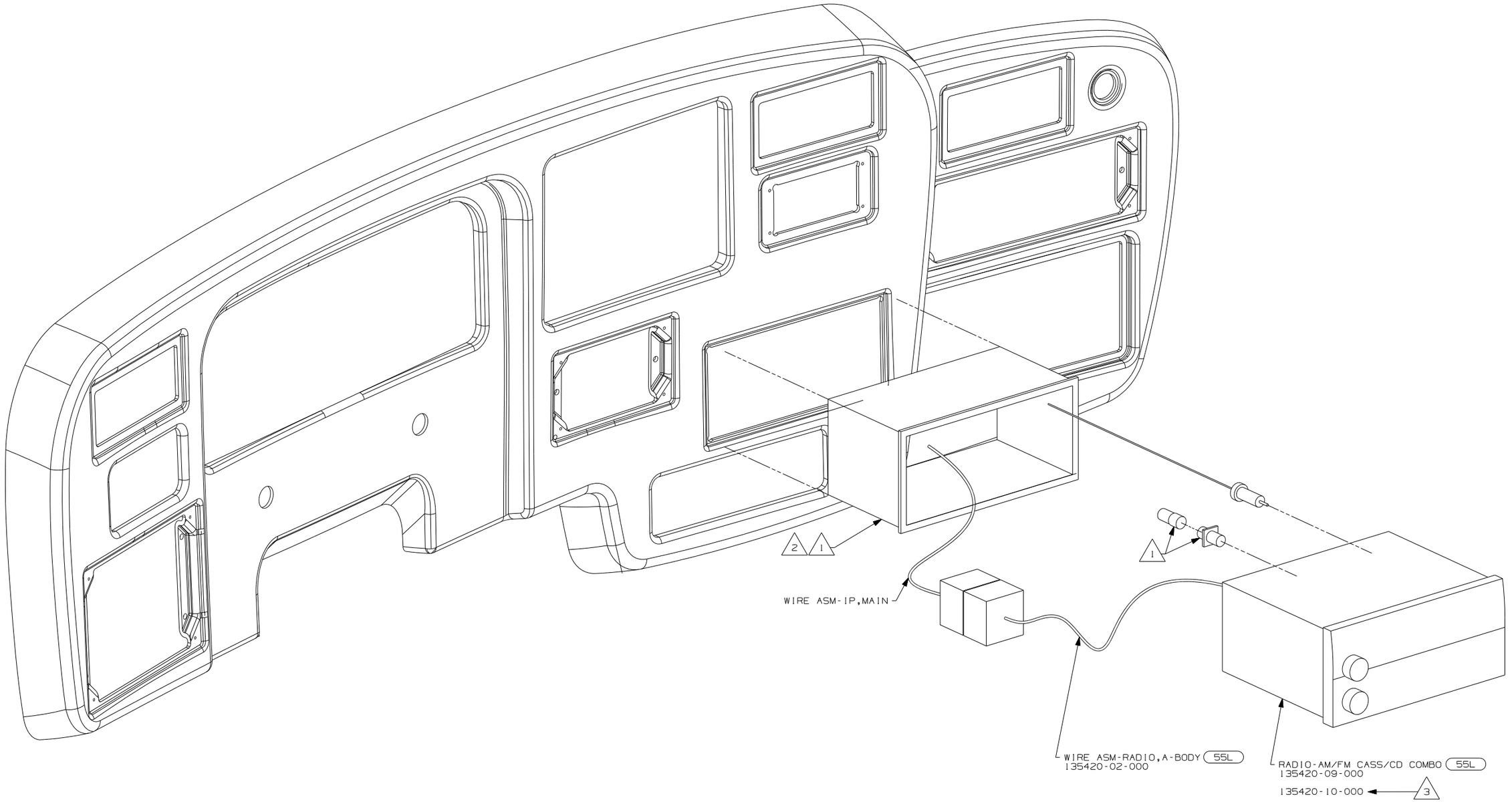

(52T) CD CHANGER-10 DISC

(55L) RADIO-AM/FM CASSETTE/CD

F & G SERIES

NOTES:

1. SUPPLIED WITH MOUNTING KIT 135420-07-000.
2. BEND TABS ON ALL 4 SIDES TO SECURE MOUNTING BRACKET TO DASH OPENING.
3. TO BE SUPPLIED IN WINNEBAGOS OWNERS CASE

FIRST USED	04 MOTORHOMES
	DO NOT SCALE DRAWING
TITLE:	RADIO INSTL
SHEET 4	PART NO 145057

DWG NO 145057

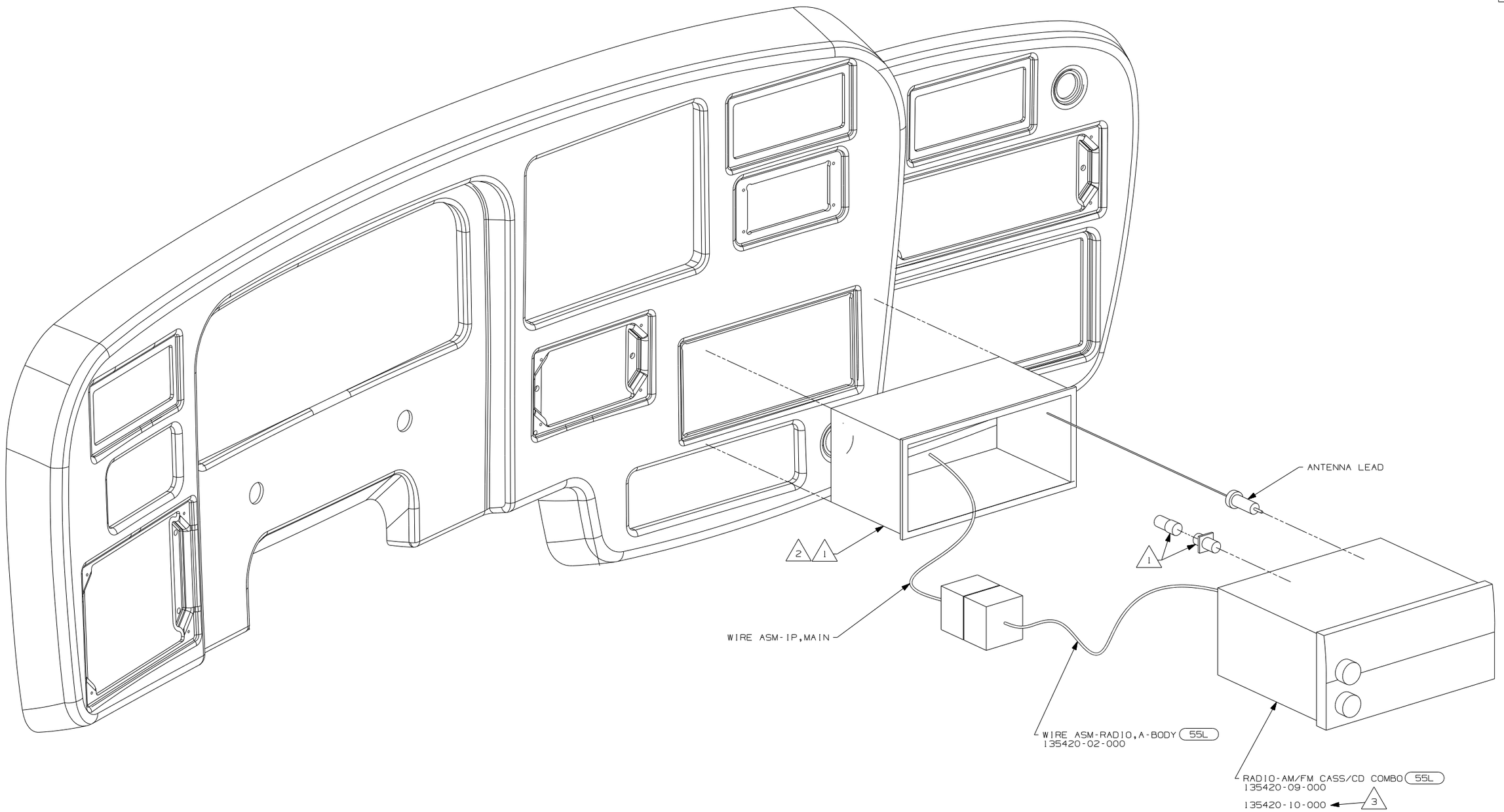

52T CD CHANGER-10 DISC

55L RADIO-AM/FM CASSETTE/CD

L SERIES

3 TO BE SUPPLIED IN WINNEBAGOS OWNERS CASE

2 BEND TABS ON ALL 4 SIDES TO SECURE MOUNTING BRACKET TO DASH OPENING.

1 SUPPLIED WITH MOUNTING KIT 135420-07-000.

NOTES:

FIRST USED	04 MOTORHOMES
	DO NOT SCALE DRAWING
TITLE:	RADIO INSTL
SHEET 5	PART NO 145057

DWG NO 145057

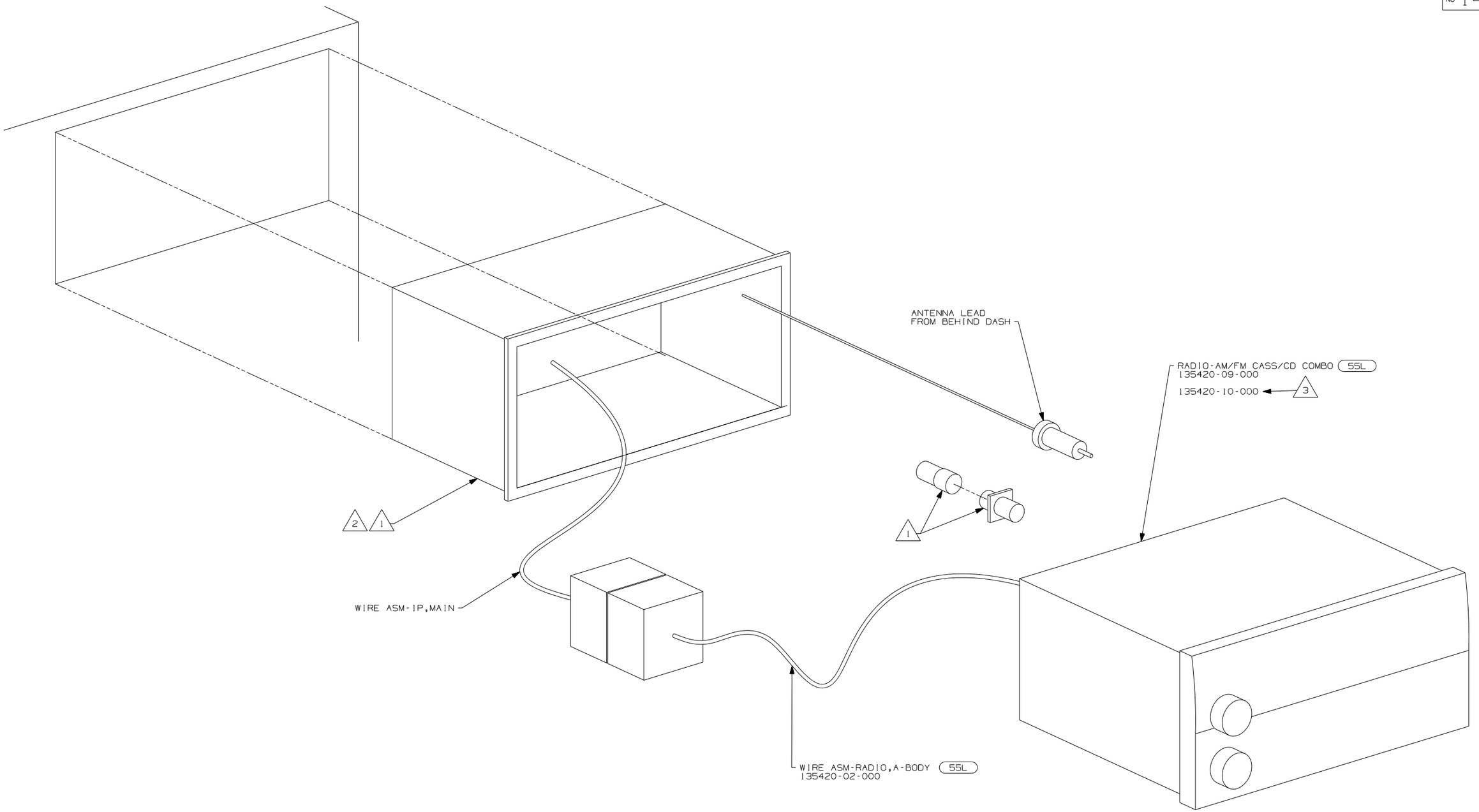

(52T) CD CHANGER-10 DISC

(55L) RADIO-AM/FM CASSETTE/CD

P SERIES

NOTES:

3. TO BE SUPPLIED IN WINNEBAGOS OWNERS CASE
2. BEND TABS ON ALL 4 SIDES TO SECURE MOUNTING BRACKET TO DASH OPENING.
1. SUPPLIED WITH MOUNTING KIT 135420-07-000.

FIRST USED	04 MOTORHOMES
	DO NOT SCALE DRAWING
TITLE:	RADIO INSTL
SHEET 6	PART NO 145057

DWG NO 145057

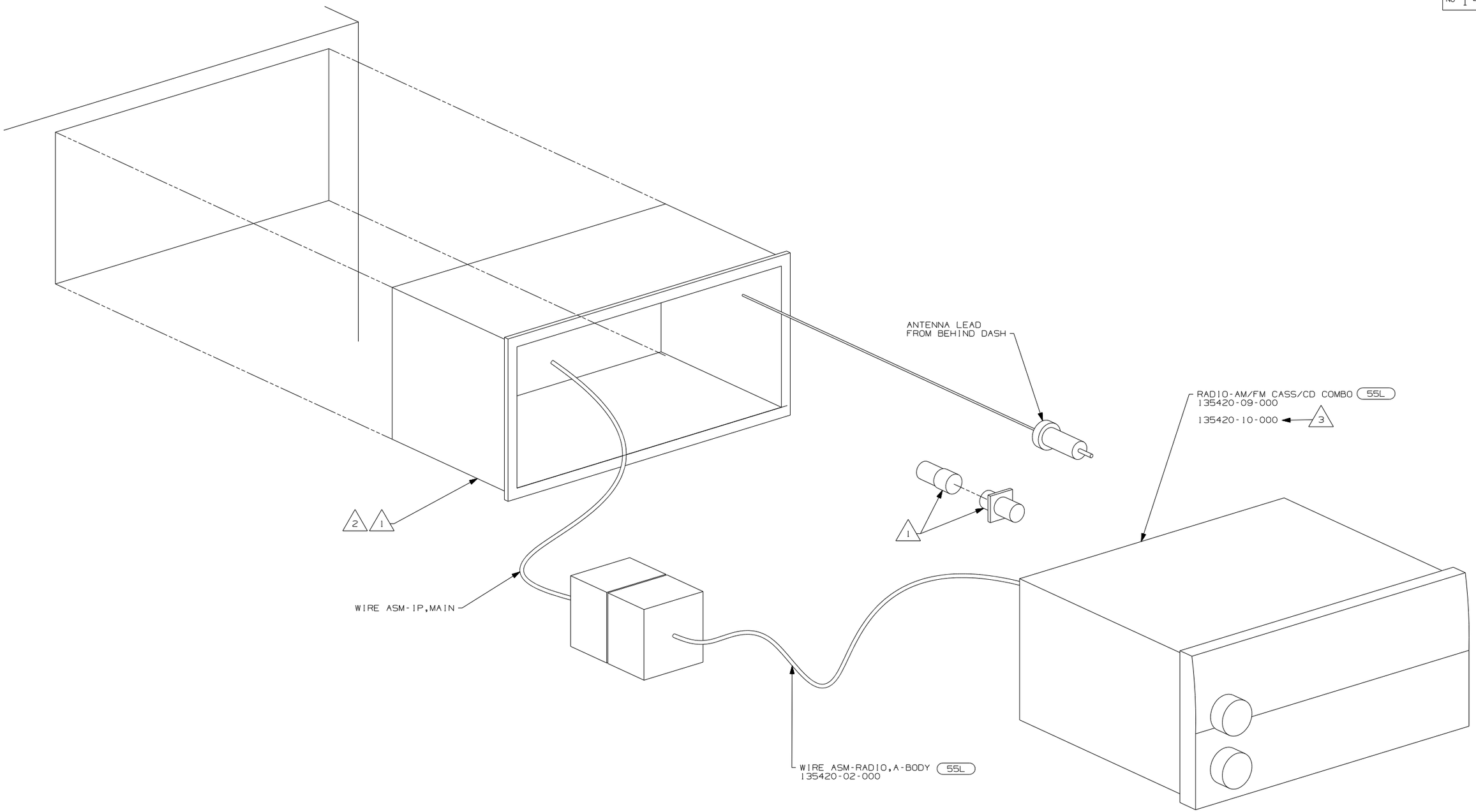

52T CD CHANGER-10 DISC

55L RADIO-AM/FM CASSETTE/CD

S SERIES

3 TO BE SUPPLIED IN WINNEBAGOS OWNERS CASE

2 BEND TABS ON ALL 4 SIDES TO SECURE MOUNTING BRACKET TO DASH OPENING.

1 SUPPLIED WITH MOUNTING KIT 135420-07-000.

NOTES:

FIRST USED	04 MOTORHOMES
	DO NOT SCALE DRAWING
TITLE:	RADIO INSTL
SHEET 7	PART NO 145057

DWG NO 145057

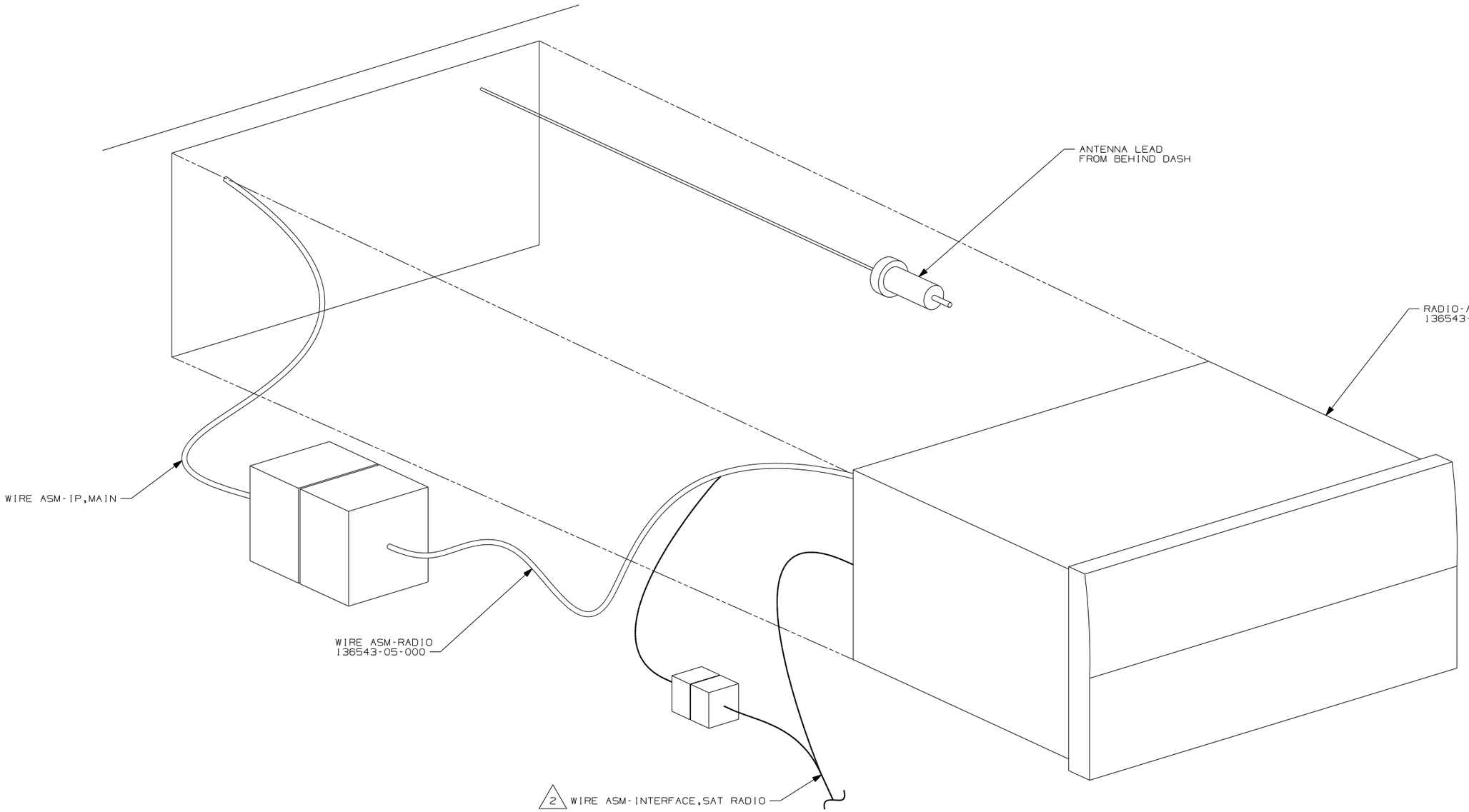

70C RADIO - SATELLITE

19V RADIO-AM/FM STEREO CD PLAYER

O SERIES

FIRST USED	04 MOTORHOMES
	DO NOT SCALE DRAWING
TITLE:	RADIO INSTL
SHEET 8	PART NO 145057

NOTES:

1. SLIDE RADIO IN DASH OPENING ENGAGING T-RAIL ON BOTTOM OF RADIO UNTIL LOCKED IN PLACE.
2. TO SATELLITE RECEIVER. SEE WIRING INSTL-FRONT END FOR ADDITIONAL INFORMATION.

DRAWING NO.	FEATURE
144951-01	WIN
144951-02	ITA

RELEASE	REV	DATE	DWG NO
	A		144951

REV	ZONE	REVISION RECORD	DATE	DFTR-ORIG

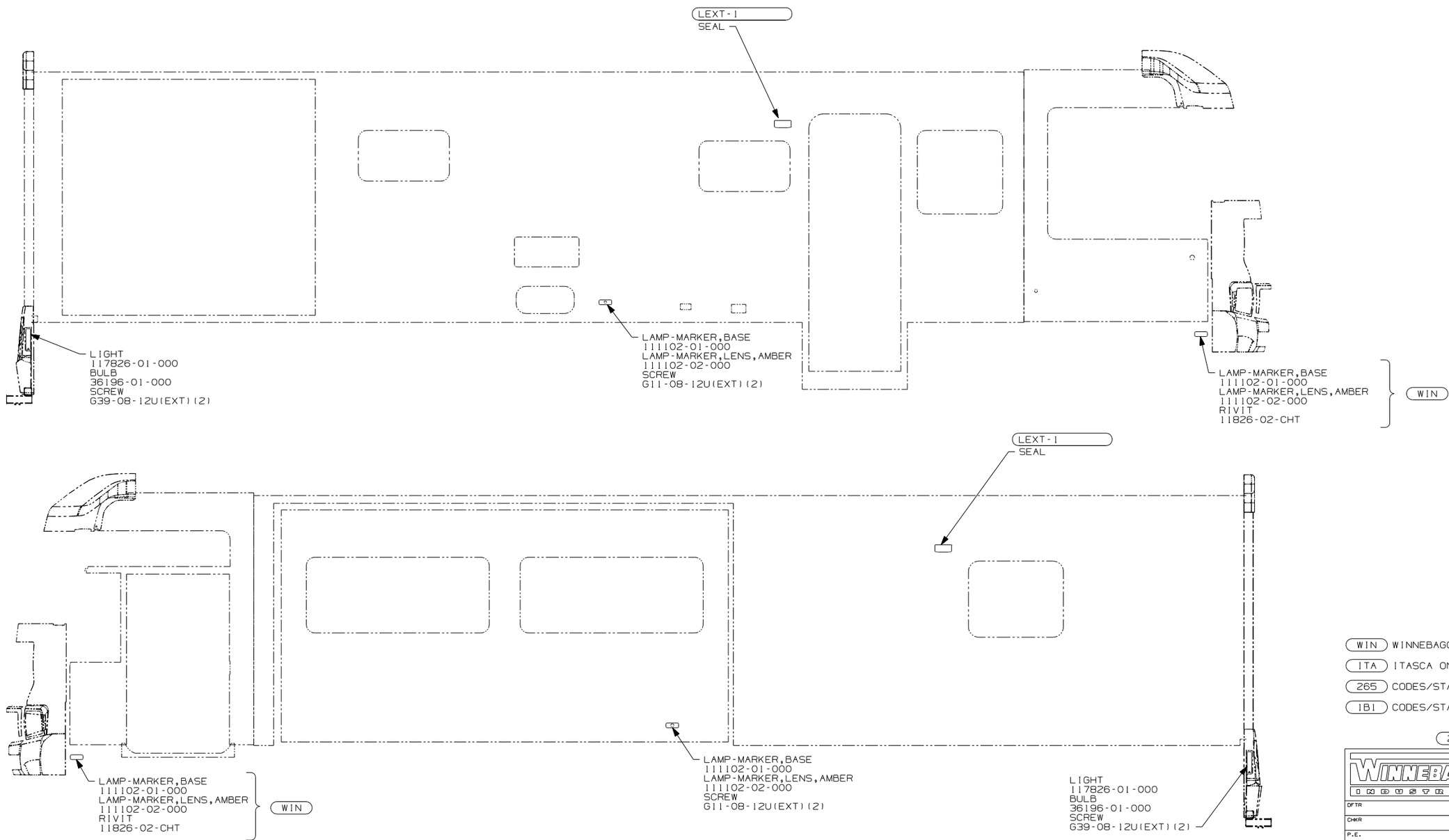

WIN WINNEBAGO ONLY

ITA ITASCA ONLY

265 CODES/STANDARDS-CSA/CMVSS

IBI CODES/STANDARDS USA

265 IBI

FOR ELECTRICAL TORQUE SPECIFICATIONS SEE DWG NO. 128783-01-000

X-X FOR ELECTRICAL CALLOUTS SEE DWG NO. 121339-01-000

WINNEBAGO INDUSTRIES

COPYRIGHT 2004 WINNEBAGO INDUSTRIES, INC.

DFTR	ORIG. DATE
CHKR	ALL DIMENSIONS ARE IN MILLIMETERS
P.E.	
M.E.	FIRST USED
DSNR	04 F-SERIES

UNSPECIFIED TOLERANCES ARE:

WHOLE DIM (X)	±	1
ONE-PLACE (X.X)	±	1.5
TWO-PLACE (X.XX)	±	0.50
ANGLE	±	1°

THIRD ANGLE PROJECTION

MATERIAL:

DO NOT SCALE DRAWING

TITLE: WIRING INSTL-EXTERIOR LAMPS

SHEET 1 OF 3

PART NO 144951

DWG NO 144951

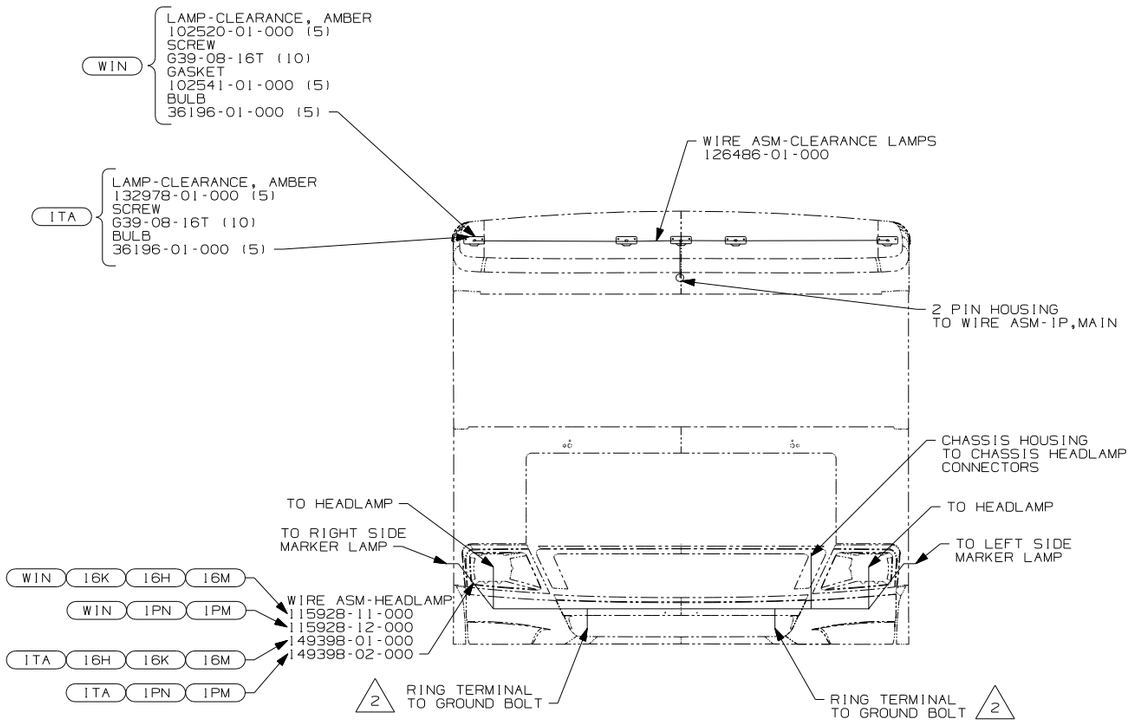

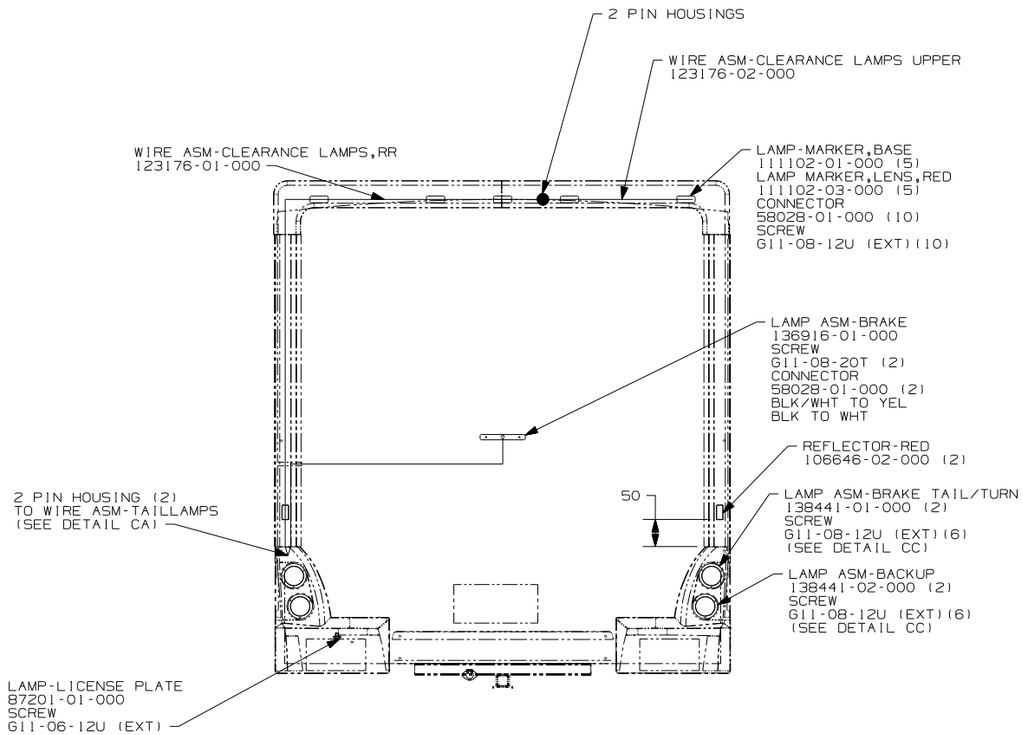

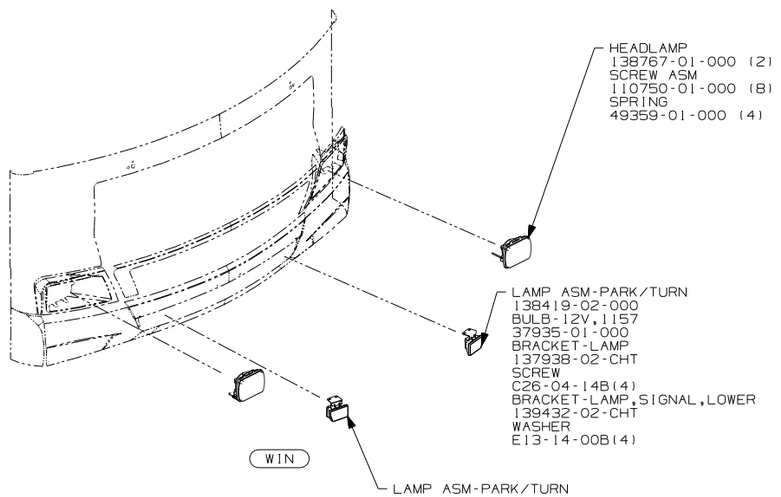

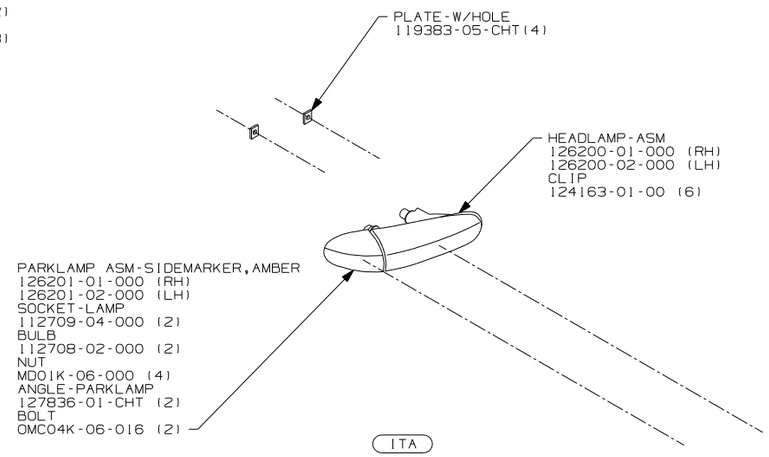

3 SECURE WIRE ASM APPROX. EVERY 450 TO BATTERY CABLES AND BRACKETS. USE TIE-WIRE 8343-01-000 OR 93147-01-000 AS APPROPRIATE.

2 CLEAN PAINT OFF METAL (BOLT) BEFORE CONNECTING GROUND TO INSURE CONTACT, ALSO MOUNT CHASSIS SUPPLIED HORN TO GROUND BOLT.

1 GAHTER ALL EXCESS WIRE AFTER MAKING ALL CONECTIONS AND BUNDLE AND SECURE WITH TIE-WIRE 8343-01-000 OR 93147-01-000.

NOTES:

WIN WINNEBAGO ONLY
ITA ITASCA ONLY
265 CODES/STANDARDS - CSA/CMVSS
1PN WORKHORSE CHASSIS - 20,700# GVWR
1PM WORKHORSE CHASSIS - 18,000# GVWR
1B1 CODES/STANDARDS - USA
16M FORD CHASSIS - 20,500# GVWR
16K FORD CHASSIS - 22,000# GVWR
16H FORD CHASSIS - 18,000# GVWR

1B1 256 ITA WIN

FOR ELECTRICAL TORQUE SPECIFICATIONS SEE DWG NO. 128783-01-000

(X-X) FOR ELECTRICAL CALLOUTS SEE DWG NO. 121339-01-000

FIRST USED 04 F-SERIES

DO NOT SCALE DRAWING

TITLE: WIRING INSTL-EXTERIOR LAMPS

SHEET 2 PART NO 144951

DWG NO 144951

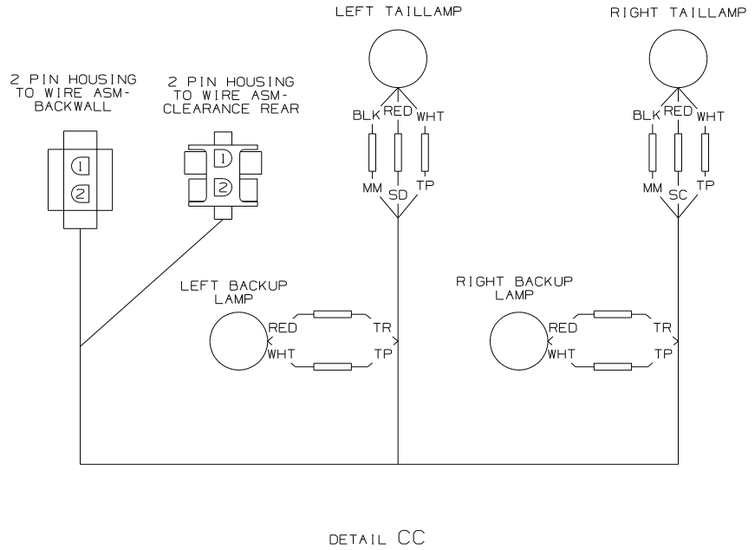

DETAIL CC

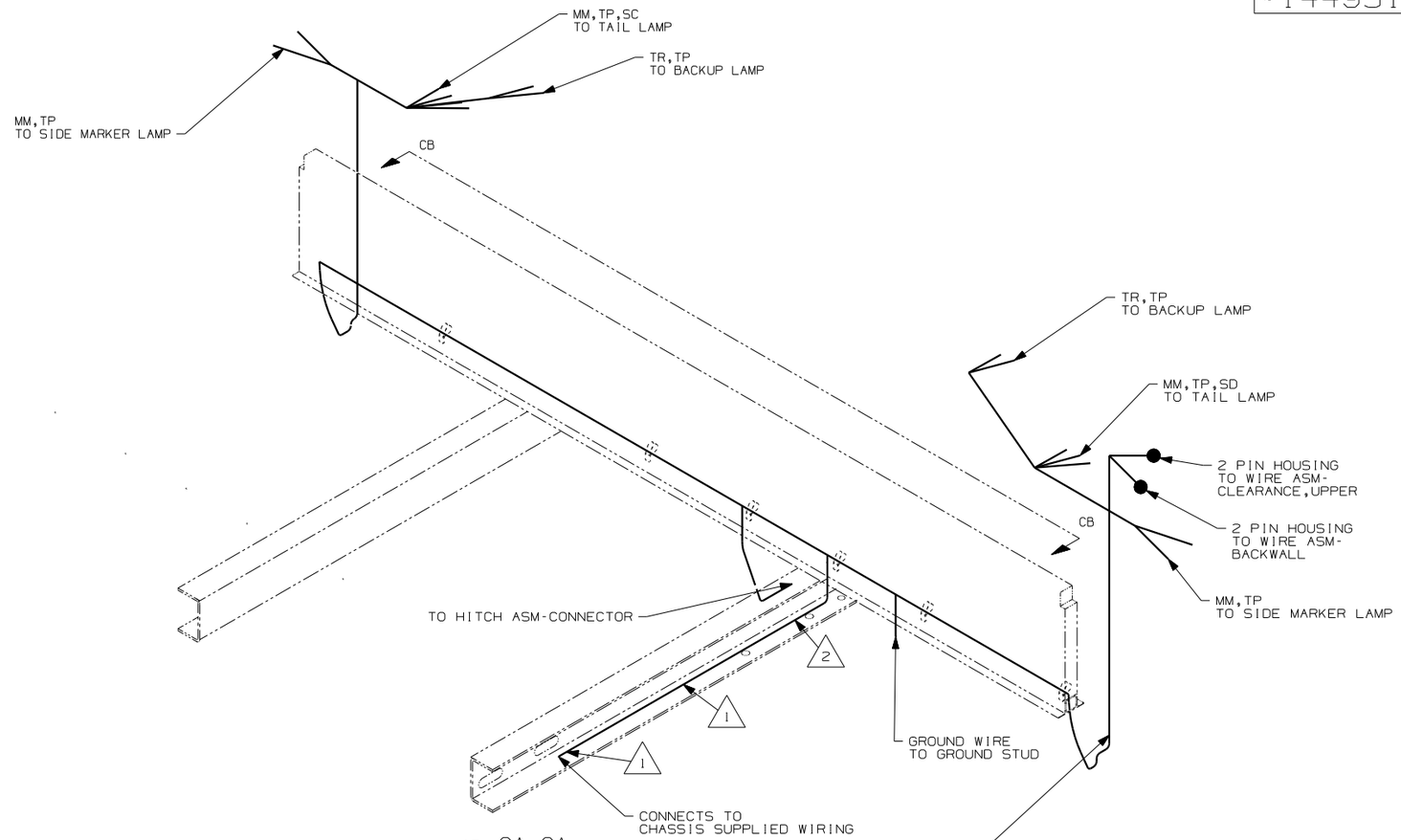

VIEW CA-CA

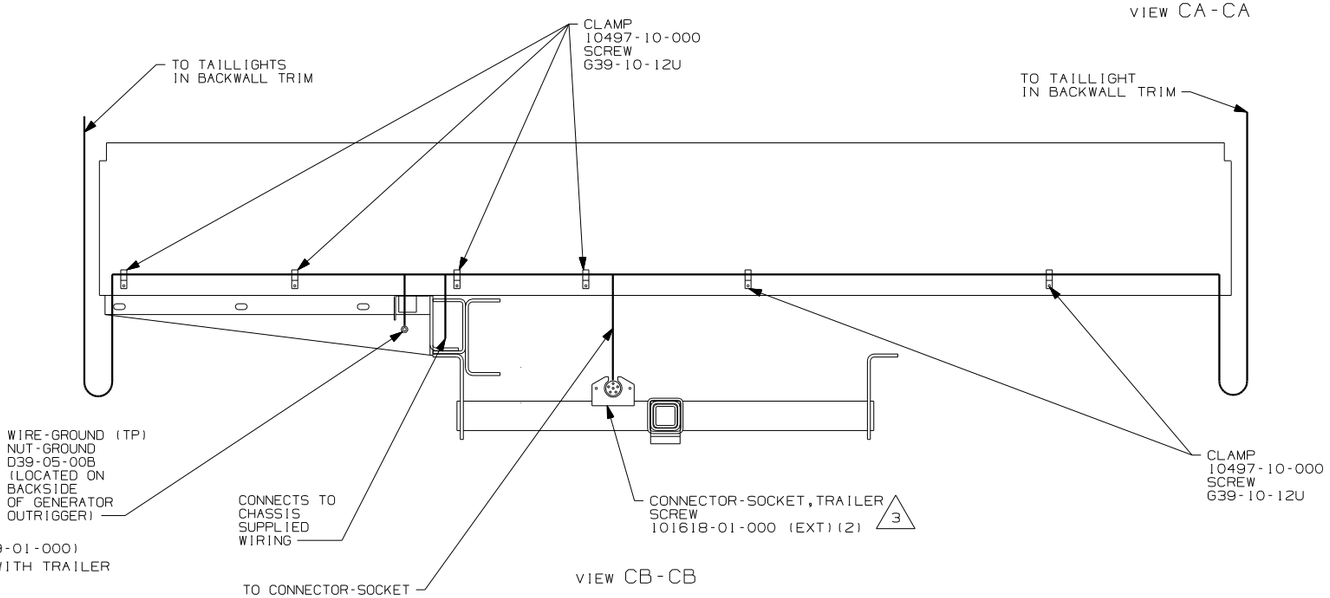

VIEW CB-CB

265 CODES/STANDARDS - CSA/CMVSS
1PN WORKHORSE CHASSIS - 20,700# GVWR
1PM WORKHORSE CHASSIS - 18,000# GVWR
1B1 CODES/STANDARDS - USA
16M FORD CHASSIS - 20,500# GVWR
16K FORD CHASSIS - 22,000# GVWR
16H FORD CHASSIS - 18,000# GVWR

1B1 265

3 CONNECTOR-PLUG, TRAILER (113589-01-000) TO BE SUPPLIED LOOSE IN COACH WITH TRAILER TOW PACKAGE.

2 WIRE TIE TO BE ROUTED ON BACK SIDE OF RISER.

1 WIRE TIE 8343-02-000 FASTEN TO FRAMW AT LEAST ONCE EVERY 600MM.

NOTES:

FIRST USED 04 F-SERIES

DO NOT SCALE DRAWING

TITLE: WIRING INSTL-EXTERIOR LAMPS

SHEET 3 PART NO 144951

DRAWING NO.	SERIES
144981-01	F
144981-02	G

RELEASE	REV	DATE	DWG NO 144981
	A		

REV	ZONE	REVISION RECORD	DATE	DFTR-ORIG

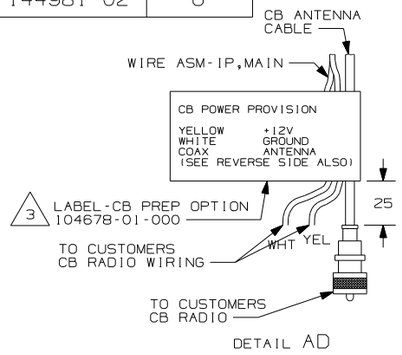

DETAIL AD

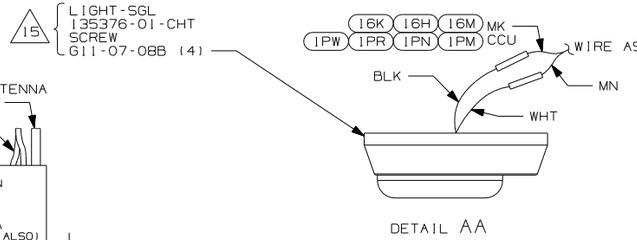

DETAIL AA

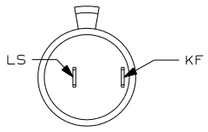

DETAIL AB

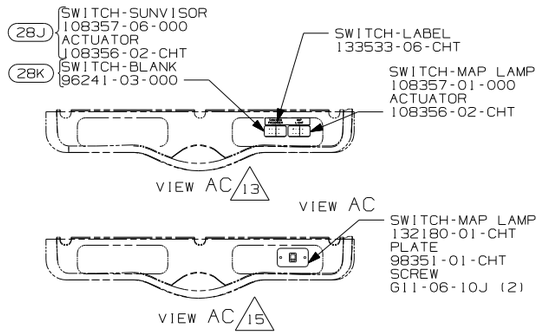

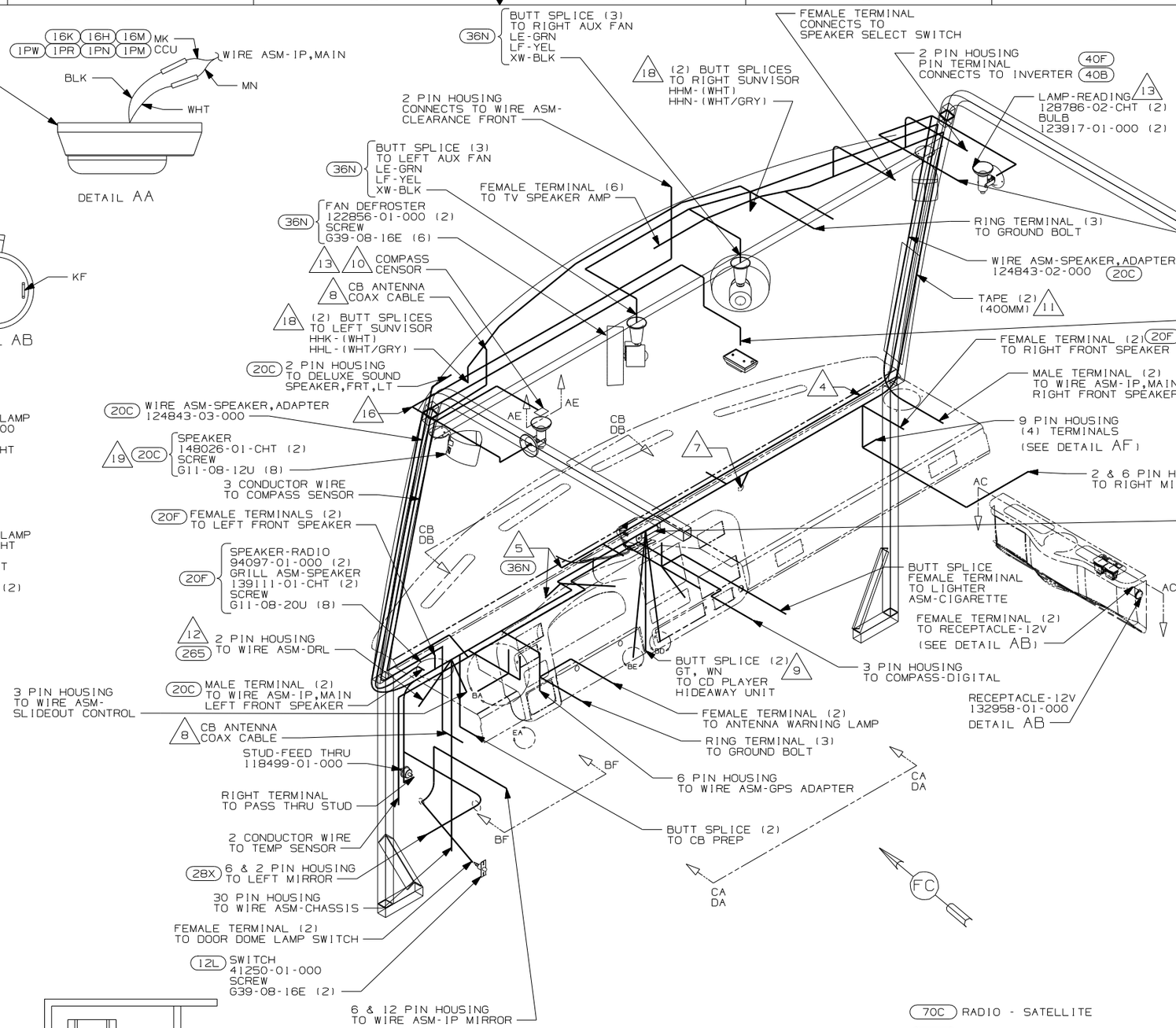

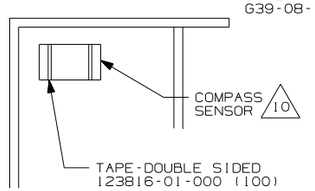

VIEW AE-AE

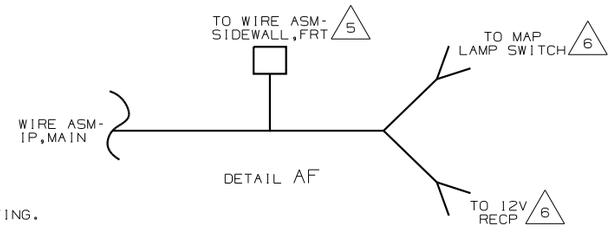

DETAIL AF

19 SPEAKER TO BE MOUNTED AT AN INWARD ANGLE 30 DEGREES FROM SIDEWALL

18 CUT VISOR WIRING TO 300mm BEFORE CONNECTING.

17 SEE WIRING INSTL-GPS FOR ADDITIONAL INFORMATION.

16 ROUTE WIRE TO CENTER DOME LAMP ON F-SERIES, ROUTE TO SIDE ON G-SERIES.

15 F SERIES ONLY.

14. CONNECT CHASSIS SUPPLIED BRN/WHT WIRE TO TERMINAL ON PARK BRAKE IF PARK BRAKE IS PRESENT. ALL STD WH CONNECT BLUE LEVELING JACK WIRE TO BROWN WIRE.

13 G SERIES ONLY.

12 SEE WIRING INSTL-DRL FOR ADDITIONAL INFORMATION.

11 USE TAPE 136748-01-000 TO SECURE WIRES IN A-POST.

10 MOUNT SENSOR WITH DOUBLE SIDED TAPE IN BOTTOM OF FRONT OVHD CABT SO THAT SENSOR FACES FORWARD AS STATED ON SENSOR LABEL.

9 SEE CD PLAYER INSTL FOR ADDITIONAL INFORMATION.

8 SEE ANTENNA INSTL-CB AND DETAIL AB.

7 ROUTE WASHER BOTTLE WIRE TOGETHER WITH HEATER CONTROL WIRES THROUGH HOLE IN STEEL ABOVE AND RIGHT OF ENGINE. USE GROMMET 23942-01-000.

6 F-SERIES ONLY. TIE BACK WITH MAIN LOOM ON G-SERIES.

5 G-SERIES ONLY. TIE BACK WITH MAIN LOOM ON F-SERIES.

4 USE WIRE TIE 93147-01-000 TO SECURE WIRE ASM-IP,MAIN.

3. FOR INFORMATION ON HWH SLIDEOUT WIRING SEE DETAIL DA.

2. FOR ADDITIONAL INFORMATION SEE WIRING INSTL-CHASSIS.

1. ONLY WINNEBAGO WIRE ASSEMBLIES ARE SHOWN FOR CLARITY.

NOTES:

40B	INVERTER-DC/AC, 300 WATT
16H	FORD CHASSIS 18,000#/V10 ENG
1PN	WORKHORSE 20,700#-19.5 TIRE
20C	SOUND SYS. DLX. W/O-SURROUND
WIN	WINNEBAGO ONLY
ITA	ITASCA ONLY
1PW	WORKHORSE 18000 DSL EXP WARR
1PM	WORKHORSE CHASSIS-18,000LB.
36N	FANS-DEFROSTER, AUXILIARY
28X	MIRRORS-EXTERIOR W/DEFROST
265	CODES/STANDARDS-CSA/CMVSS
20F	DELUXE SOUND SYSTEM-WITHOUT
16M	FORD CHASSIS 20,500#/V10 ENG
70C	RADIO - SATELLITE
28K	SUNVISORS - MANUAL (2)
28J	SUNVISORS - POWERED (2)
1PS	WORKHORSE 22,000#-19.5 TIRE
16K	FORD CHASSIS 22,000
12L	DOOR-DRIVER
1PR	WORKHORSE 22,000#

FOR ELECTRICAL TORQUE SPECIFICATIONS SEE DWG NO. 128783-01-000

X-X FOR ELECTRICAL CALLOUTS SEE DWG NO. 121339-01-000

COPYRIGHT 2004 WINNEBAGO INDUSTRIES, INC.

DFTR	ORIG. DATE
CHKR	ALL DIMENSIONS ARE IN MILLIMETERS
P.E.	
M.E.	FIRST USED
DSNR	04 F&G SERIES

UNSPECIFIED TOLERANCES ARE: WHOLE DIM (X) : ONE-PLACE (X.X) : TWO-PLACE (X.XX) : ANGLE :

MATERIAL:

THIRD ANGLE PROJECTION

DO NOT SCALE DRAWING

TITLE: WIRING INSTL-FRONT END

SHEET 1 OF 8 PART NO 144981

DWG NO 144981

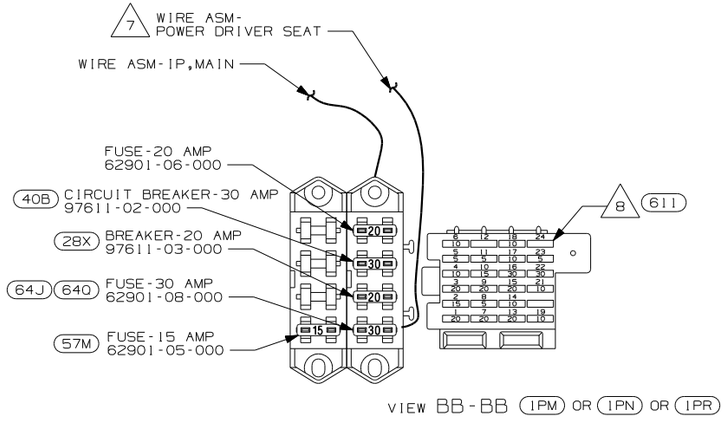

VIEW BB-BB 1PM OR 1PN OR 1PR

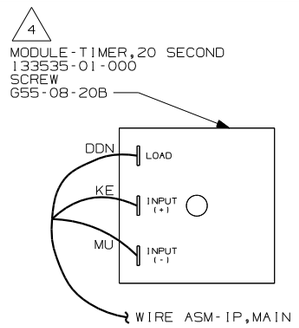

DETAIL BD

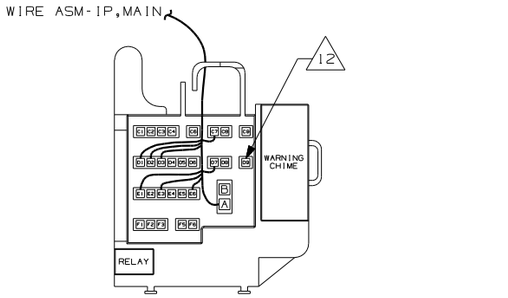

VIEW BF-BF
COURTESY CENTER 1PN OR 1PM 9 OR 1PR

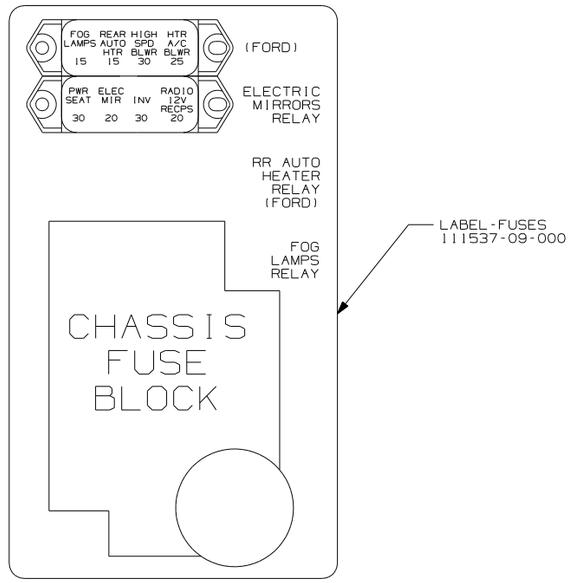

VIEW BC-BC 1PM 16M 1PN 16H 1PR 1PW

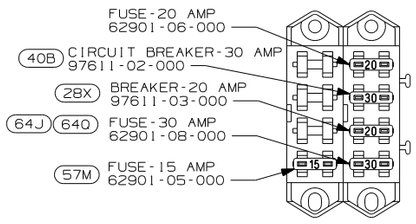

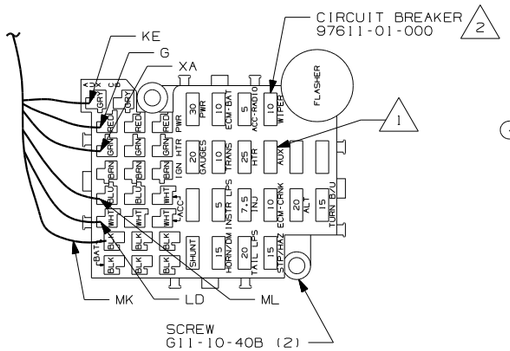

VIEW BB-BB 1PW

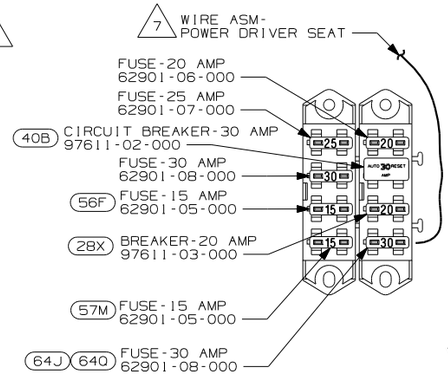

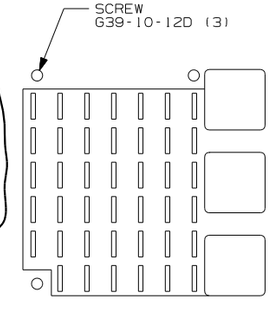

VIEW BB-BB 16M 16H

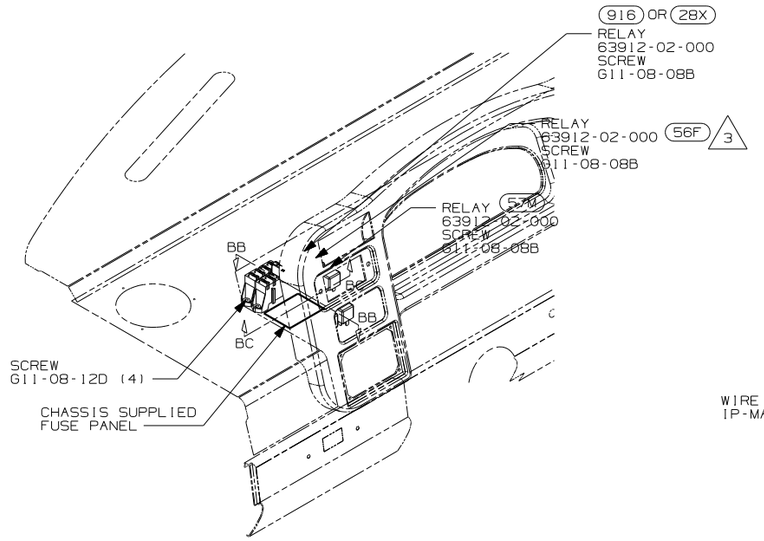

VIEW BA-BA 1PM 1PN 16M 16H 1PR

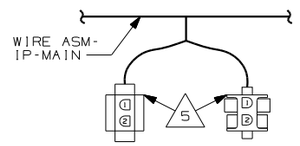

DETAIL BE 20F

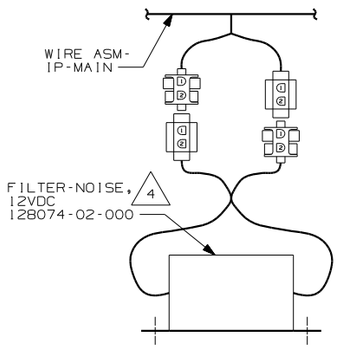

DETAIL BE 20C

12 CONNECT CHASSIS SUPPLIED CONNECTOR LABELED "SEAT BELT BYPASS" TO POSITION D9 IN CONVENIENCE CENTER.

11 G-SERIES ONLY

10 F-SERIES ONLY

9 CHASSIS SUPPLIED

8 REPLACE 5 AMP FUSE IN #24 WITH AMP FUSE 125986-05-000.

7 MOUNT TERMINAL IN FUSE BLOCK.

6 NOT USED WITH 16M & 16H

5 CONNECT HOUSINGS TOGETHER.

4 MOUNT ON TOP LEFT REAR CORNER OF PANEL-COVER,RADIATOR.

3 NOT USED WITH 1PM

2 REPLACE 30A CIRCUIT BREAKER WITH 15 AMP FUSE AND SAVE FOR USE ELSEWHERE.

1 TRIM FUSE BLOCK SO CIRCUIT BREAKER FITS PROPERLY. REPLACE 25 AMP FUSE AND SAVE FOR USE ELSEWHERE.

NOTES:

57M LAMPS-FOG
1PW WORKHORSE 18000 DSL EXP WARR
1PR WORKHORSE 22,000#
16H FORD CHASSIS 18,000#/V10 ENG
611 WTR HTR-RR AUTO/MOTORAID
1PN WORKHORSE 20,700#-19.5 TIRE
20C SOUND SYS. DLX. W/O-SURROUND
40B INVERTER-DC/AC, 300 WATT
64J SEAT PED-6-WAY DR/PASS POWER
21V SOUND SYSTEM DELUXE
20F DELUXE SOUND SYSTEM-WITHOUT
16M FORD CHASSIS 20,500#/V10 ENG
1PM WORKHORSE CHASSIS-18,000LB.
916 MIRRORS-EXTERIOR, EXPORT
640 SEAT PED-6-WAY POWER DRIVER
56F HEATER-AUXILIARY AUTOMOTIVE
28X MIRRORS-EXTERIOR W/DEFROST

FIRST USED	04 F&G SERIES
	DO NOT SCALE DRAWING
TITLE:	WIRING INSTL-FRONT END
SHEET 2	PART NO 144981

DWG NO 144981

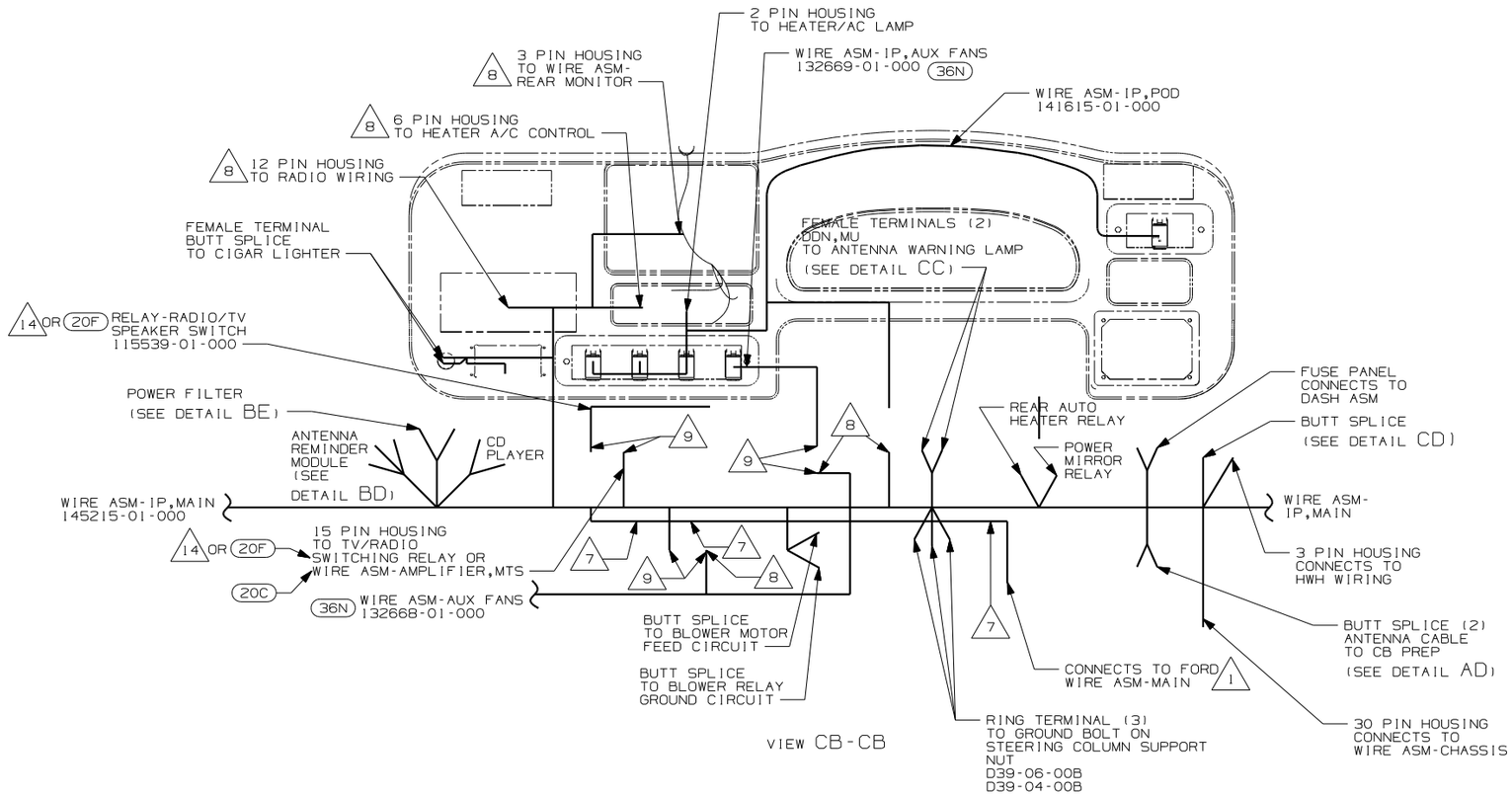

VIEW CB-CB

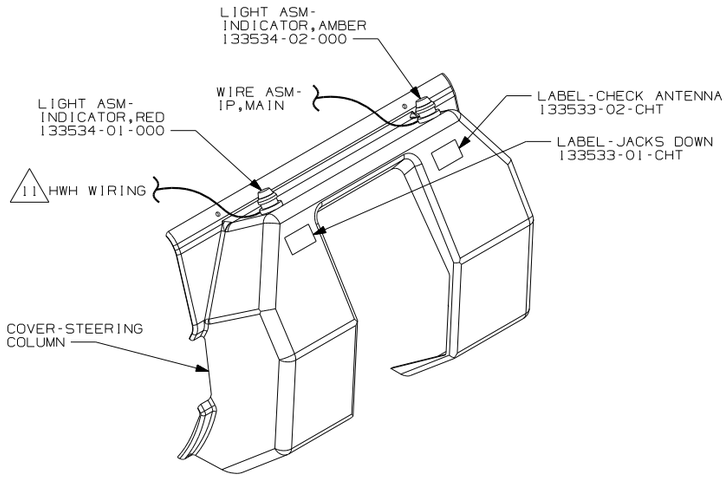

DETAIL CC

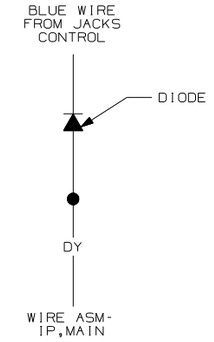

DETAIL CD

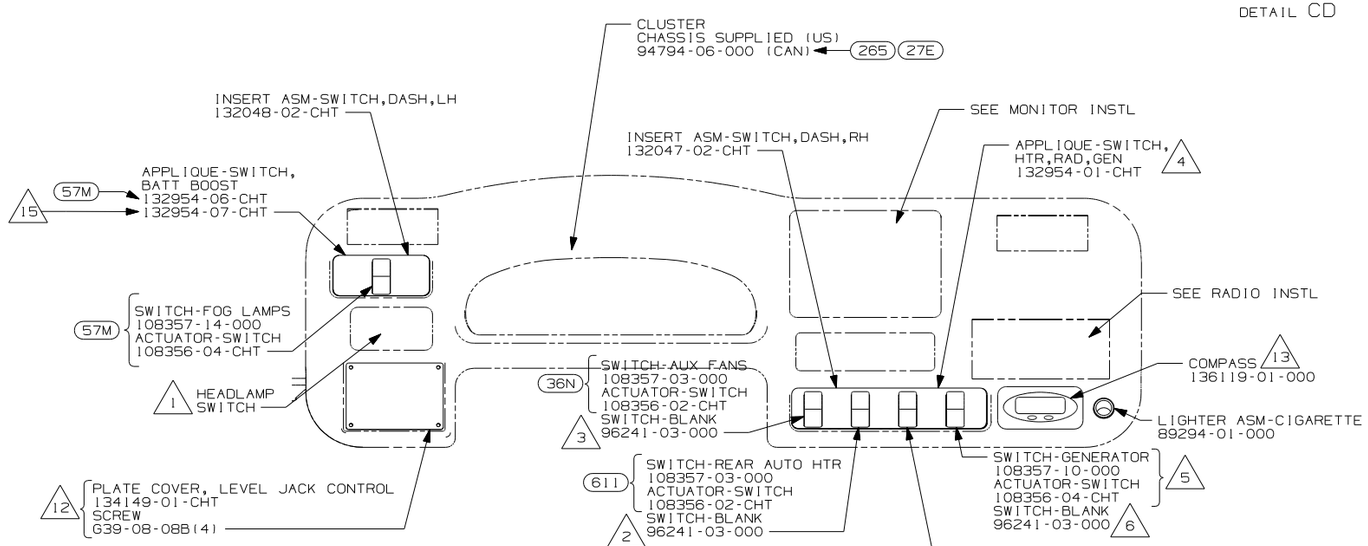

VIEW CA-CA

15 WITHOUT (57M)
14 F-SERIES ONLY
13 G-SERIES ONLY
12 FOR USE WITH (64H)
11 SEE LEVELING SYSTEM INSTL FOR ADDITIONAL INFORMATION.
10 MOUNT ON TOP LEFT REAR CORNER OF PANEL-COVER,RADIATOR.
9 CONNECT HOUSINGS TOGETHER.
8 SECURE IN DASH STEEL.
7 TIE ALONG WIRE ASM-MAIN WITH WIRE TIE 93147-01-000
6 WITHOUT GENERATOR
5 WITH GENERATOR
4 COVER CLEAR LEGEND ON BEZEL WITH FILM 77031-01-000 (W/BLANK) OR 77031-03-000 (W/OPTION).
3 WITHOUT (36N)
2 WITHOUT (611)
1 CHASSIS SUPPLIED

NOTES:

(57M) LAMPS-FOG
(16K) FORD CHASSIS 22,000
(16H) FORD CHASSIS 18,000#/V10 ENG
(265) CODES/STANDARDS-CSA/CMVSS
(20C) SOUND SYS. DLX. W/O-SURROUND
(WIN) WINNEBAGO ONLY
(ITA) ITASCA ONLY
(64H) HYDRAULIC LEVELING JACKS
(16M) FORD CHASSIS 20,500#/V10 ENG
(611) WTR HTR-RR AUTO/MOTORAID
(36N) FANS-DEFROSTER, AUXILIARY
(27E) CODES/STANDARDS-CMVSS
(20F) DELUXE SOUND SYSTEM-WITHOUT

(16H) (16M) (16K)

FIRST USED 04 F&G SERIES

DO NOT SCALE DRAWING

TITLE: WIRING INSTL-FRONT END

SHEET 3 PART NO 144981

DWG NO 144981

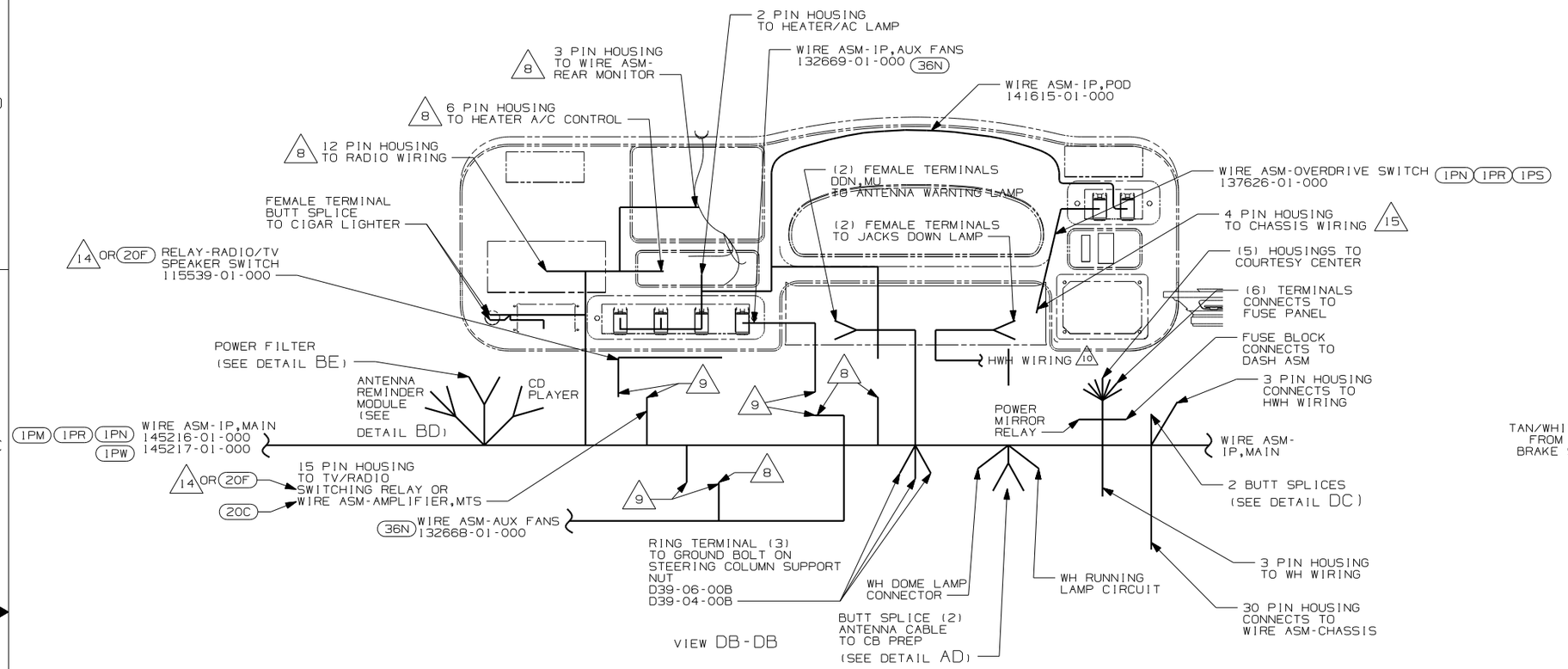

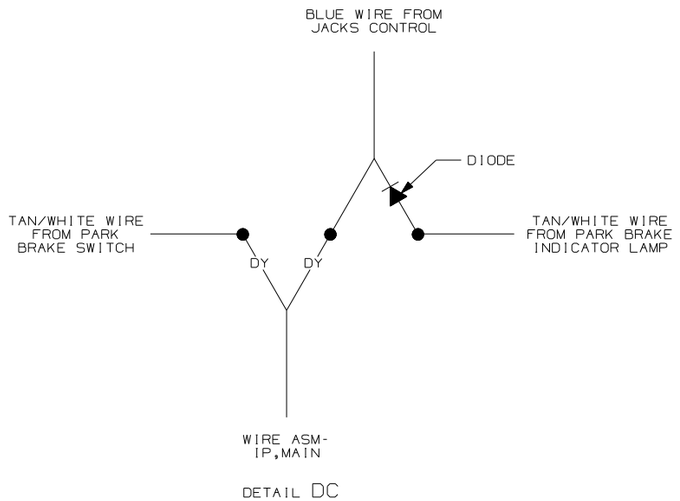

DETAIL DC

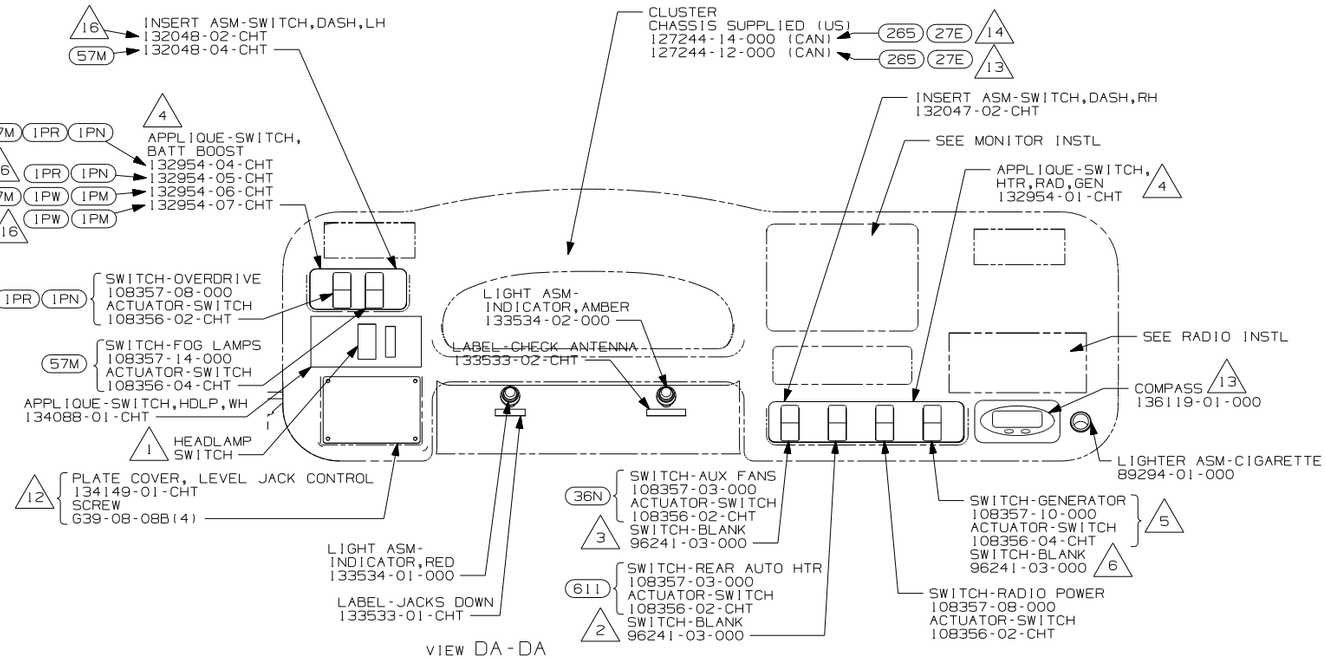

VIEW DA-DA

16 WITHOUT (57M)

15 SEND CHASSIS SUPPLIED LOOM TO WIRE PREP FOR MODIFICATIONS AS NOTED IN WIRE ASM-OVERDRIVE SWITCH.

14 F-SERIES ONLY

13 G-SERIES ONLY

12 FOR USE WITH SHELLS WITHOUT (64H)

11 MOUNT ON TOP LEFT REAR CORNER OF PANEL-COVER,RADIATOR.

10 SEE LEVELING SYSTEM INSTL FOR ADDITIONAL INFORMATION.

9 CONNECT HOUSINGS TOGETHER.

8 SECURE IN DASH STEEL.

7 TIE ALONG WIRE ASM-MAIN WITH WIRE TIE 93147-01-000.

6 WITHOUT GENERATOR

5 WITH GENERATOR

4 COVER CLEAR LEGEND ON BEZEL WITH FILM 77031-01-000 (W/BLANK) OR 77031-03-000 (W/OPTION).

3 WITHOUT (36N)

2 WITHOUT (611)

1 CHASSIS SUPPLIED

NOTES:

(1PS) WORKHORSE 22,000#-22.5 TIRE
(1PW) WORKHORSE 18000 DSL EXP WARR
(57M) LAMPS-FOG
(1PR) WORKHORSE 22,000#
(27E) CODES/STANDARDS-CMVSS
(265) CODES/STANDARDS-CSA/CMVSS
(64H) HYDRAULIC LEVELING JACKS
(20C) SOUND SYS. DLX. W/O-SURROUND
(1PM) WORKHORSE CHASSIS-18,000LB.
(611) WTR HTR-RR AUTO/MOTORAID
(36N) FANS-DEFROSTER, AUXILIARY
(1PN) WORKHORSE 20,700#-19.5 TIRE
(20F) DELUXE SOUND SYSTEM-WITHOUT

(1PW) (1PR) (1PN) (1PM)

FIRST USED 04 F&G SERIES

DO NOT SCALE DRAWING

TITLE: WIRING INSTL-FRONT END

SHEET 4 PART NO 144981

DWG NO 144981

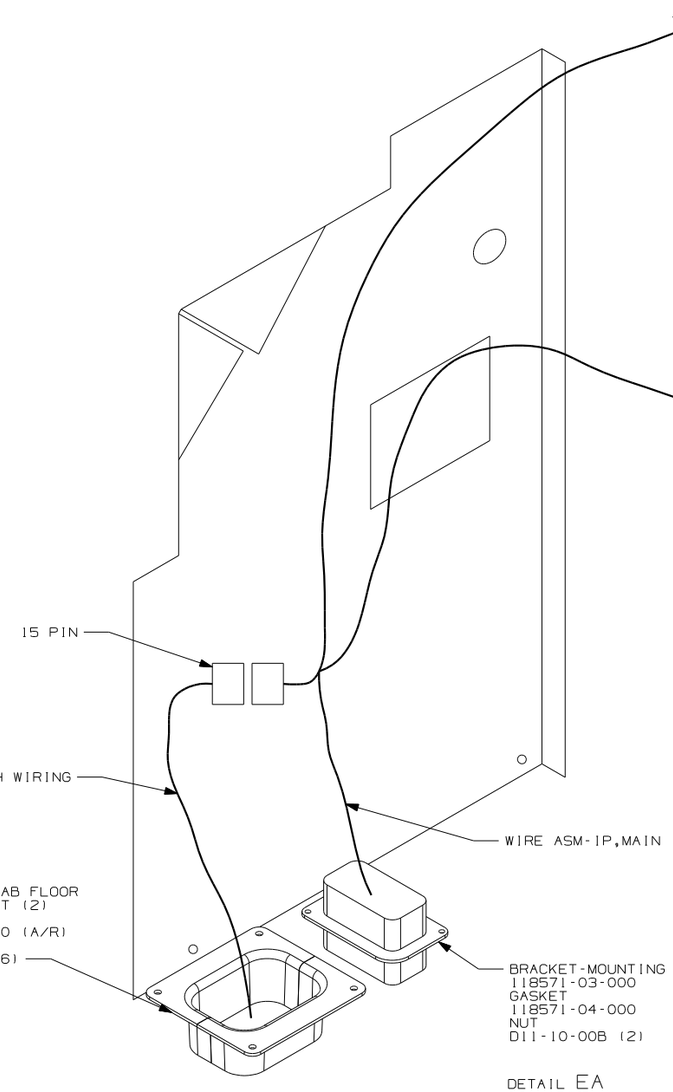

DETAIL EA
(SLIDEOUT CONTROLS)

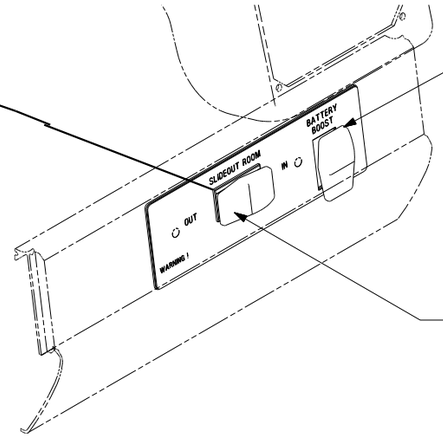

SWITCH-BATTERY BOOST
108357-09-000
ACTUATOR-SWITCH
108356-02-CHT

SWITCH-SLIDEOUT
108357-06-000 (09L) OR (1D2)
ACTUATOR-SWITCH
108356-02-CHT (1A8)
SWITCH-BLANK
96241-03-000
APPLIQUE-SWITCH
132946-03-CHT
PLATE ASM-SWITCH
132891-04-CHT
NUT-PAL,8-32
112722-01-CHT (2)

△9 △6 △5 CABLE-ANTENNA
147190-03-000
TO ANTENNA
(ROUTE UP LEFT A-PILLAR)

△9 WIRE ASM-POWER CABLE
148115-01-000
CONNECT BLK/WHT TO WN &
BLK TO MU
FROM WIRE ASM-IP,MAIN

CABLE-AUDIO △9
148114-01-000
CONNECT TO FEMALE
CONNECTORS ON
DASH RADIO

△4

GROMMET
71015-40-000

109 △8

△7 7

107

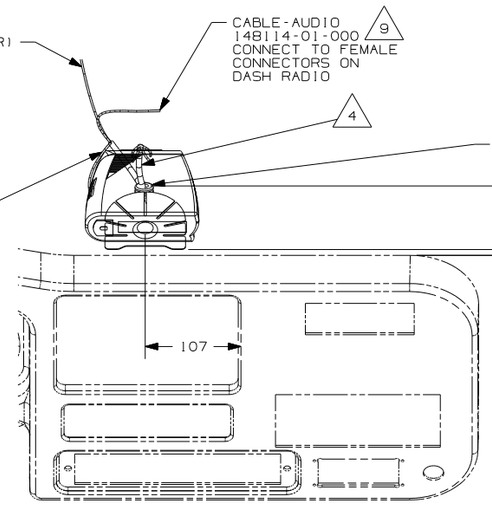

DETAIL EB (70C)

EC EC

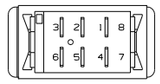

△2 △3 VIEW EB-EB
(SWITCH MOUNTING
ORIENTATION)

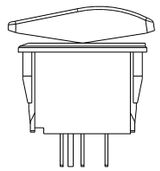

△1 △3 VIEW EC-EC
(SWITCH ACTUATOR
ORIENTATION)

△6 PLUG CABLE MARKED TERR INTO TERR INPUT
ON SATELLITE RECIEVER, PLUG CABLE MARKED
SAT INTO SAT INPUT ON SATELLITE RECIEVER.

△5 SEE ANTENNA INSTL-RADIO & CB FOR ADDITIOONAL INFORMATION.

△4 COVER WITH CONDUIT 41953-01-000 (300mm)
FROM REAR OF SATELLITE TUNER AND THRU GROMMET.

△3 SWITCH SHOWN WITHOUT WIRE ASM HOUSING CONNECTED.

△2 SAME FOR ALL SWITCHES EXCEPT GENERATOR
SWITCH AND AUX START SWITCH.

△1 SAME FOR ALL DASH SWITCHES.

NOTES:

△9 WIRES ARE ROUTED UNDER DASH BUT
SHOWN FOR CONNECTIONS.

△8 DIMENSION IS FROM BACK SIDE OF INSTRUMENT BEZEL
TO CENTER OF GROMMET.

△7 DIMENSION IS FROM BACK SIDE OF INSTRUMENT BEZEL
TO FRONT SIDE OF MOUNTING BASE.

(70C) RADIO - SATELLITE
(1A8) SLIDEOUT ROOM FRONT LEFT W/O
(1D2) SLIDEOUT ROOM-REAR RIGHTHAND
(09L) SLIDEOUT ROOM FRONT LEFT

FIRST USED 04 F&G SERIES	
DO NOT SCALE DRAWING	
TITLE: WIRING INSTL-FRONT END	
SHEET 5	PART NO 144981

DWG NO 144981

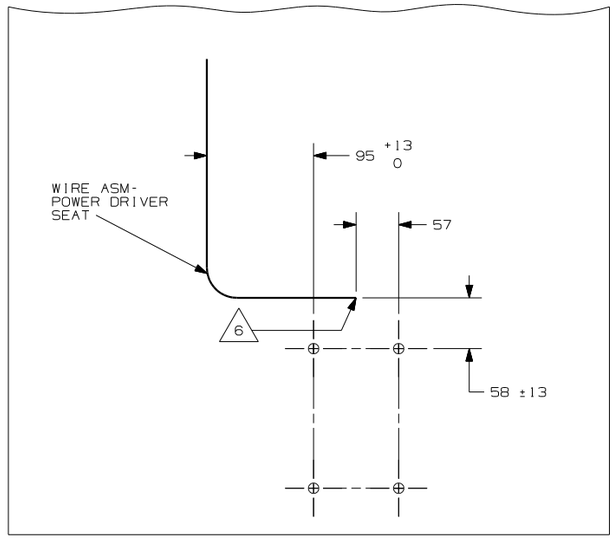

DETAIL FB (640)

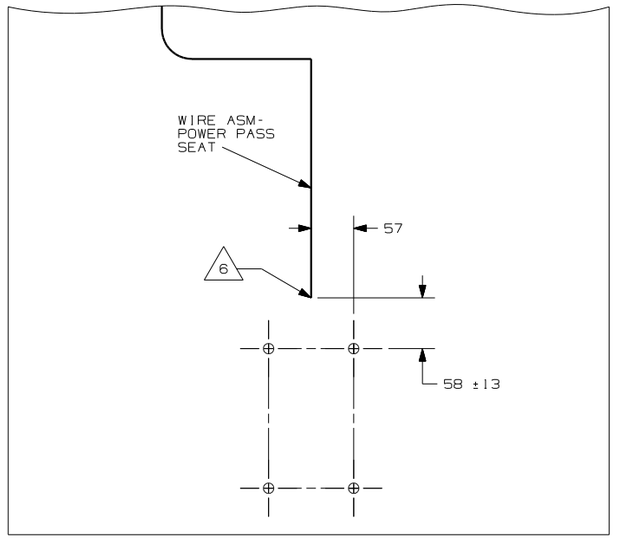

DETAIL FD (64J)

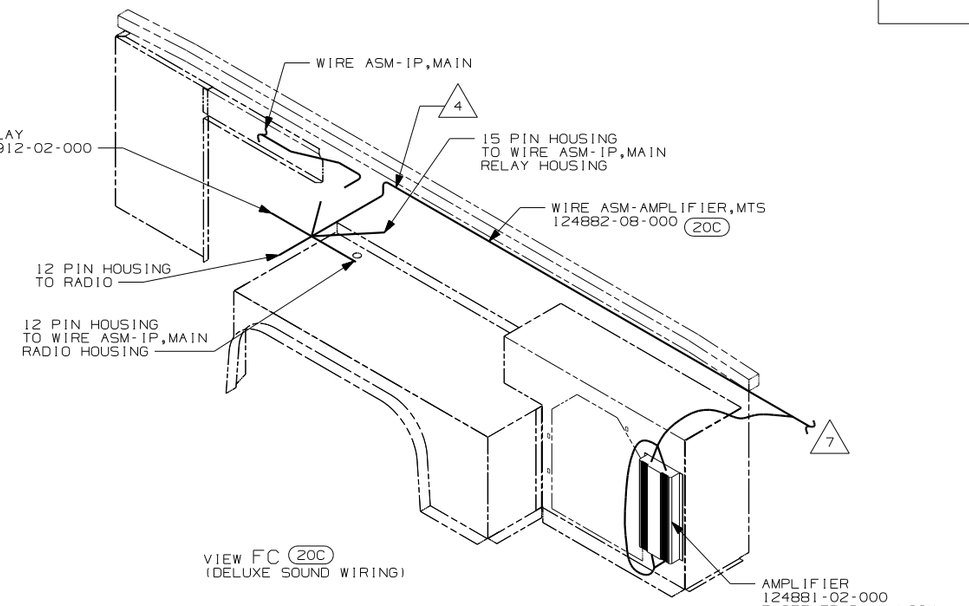

VIEW FC (20C)
(DELUXE SOUND WIRING)

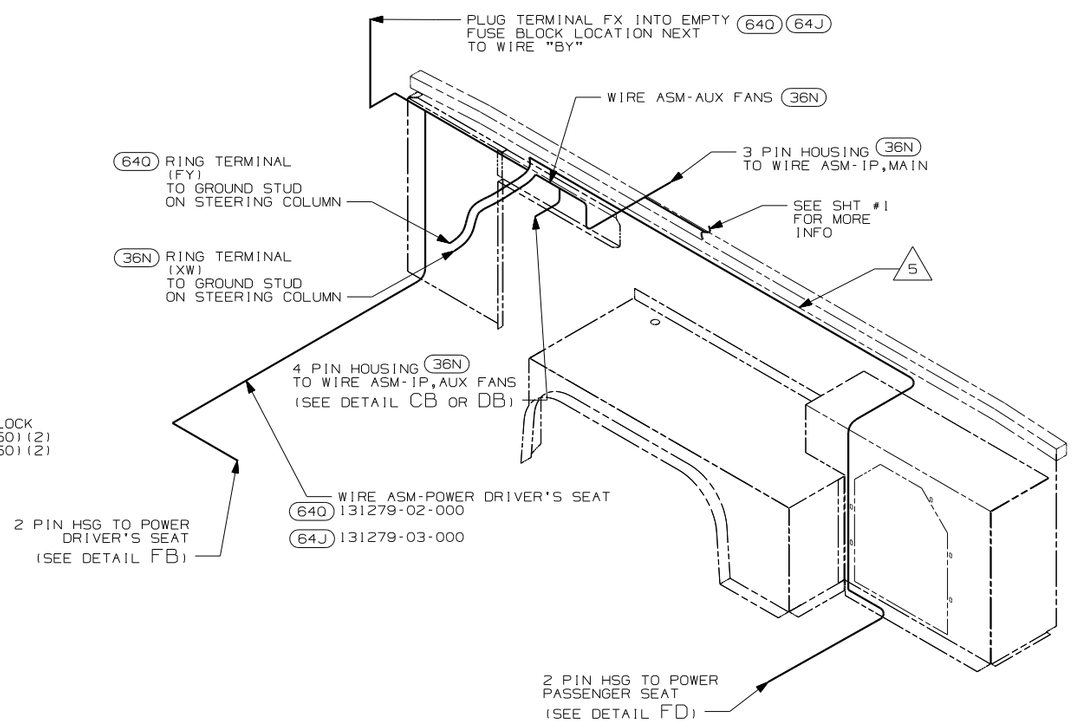

VIEW FC (36N)(640)
(AUXILIARY WIRING)

8 PLUG RCA CABLES INTO PORTS LABELED STEREO TV.

7 ROUTE RCA CABLE AND TWO PIN HOUSING UP RIGHT A-PILLAR TO TV AND CENTER CHANNEL SPACER.

6 LEAVE 675, ±50MM OF WIRE AT PEDESTAL.

5 ROUTING WITH (64J) ONLY.

4 ROUTE WITH WIRE ASM-IP,MAIN

3 EDGE OF LABEL TO HANG JUST BELOW BOTTOM OF DASH

2 USE ON SHELL W/GENERATOR.

1 USE WITH SHELLS ONLY.

NOTES:

(640) SEAT PED-6-WAY POWER DRIVER

(40J) CB RADIO PREP

(36N) FANS-DEFROSTER, AUXILIARY

(64J) SEAT PED-6-WAY DR/PASS POWER

(20C) SOUND SYS. DLX. W/O-SURROUND

FIRST USED	04 F&G SERIES
	DO NOT SCALE DRAWING
TITLE:	WIRING INSTL-FRONT END
SHEET 6	PART NO 144981

DWG NO 144981

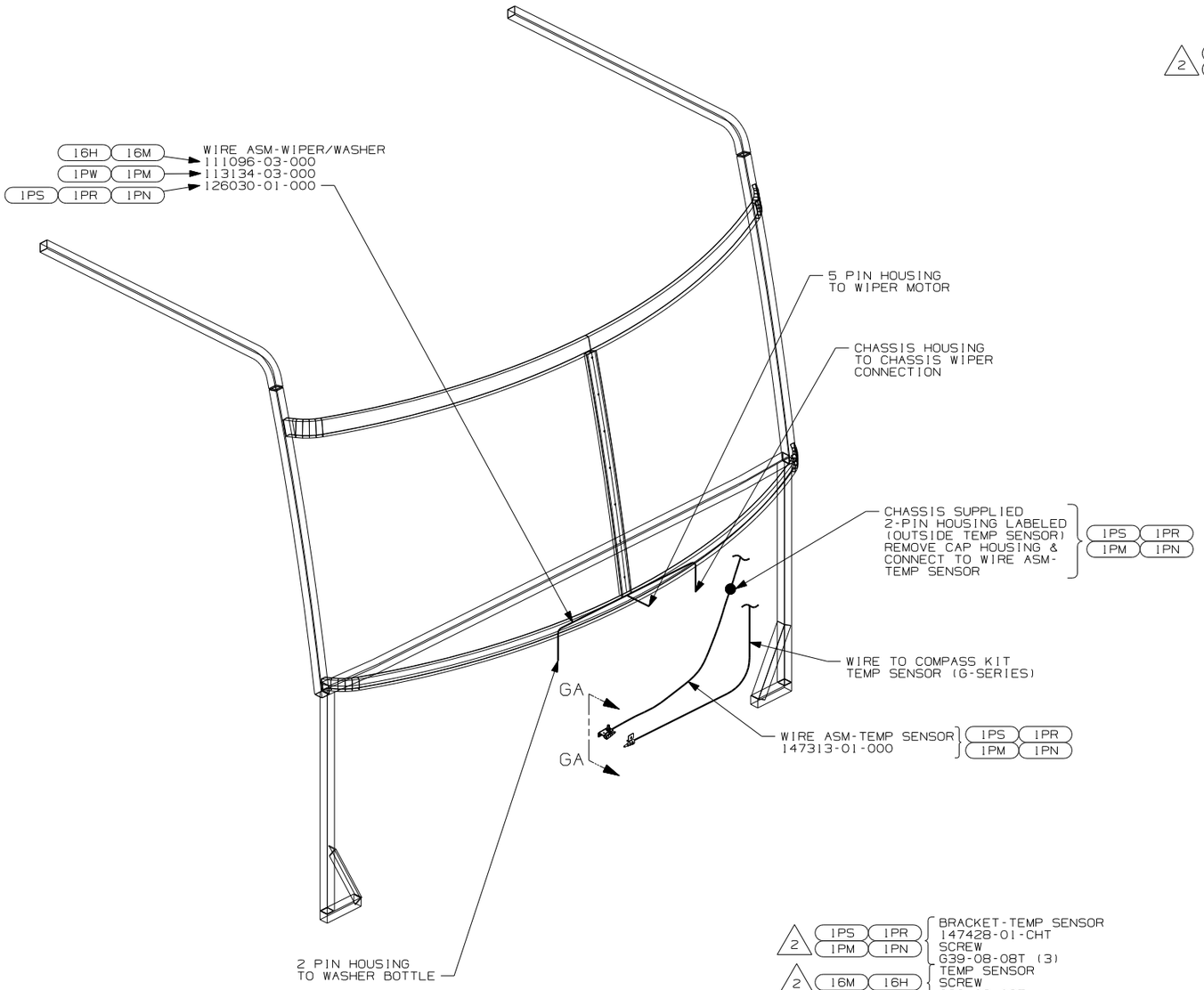

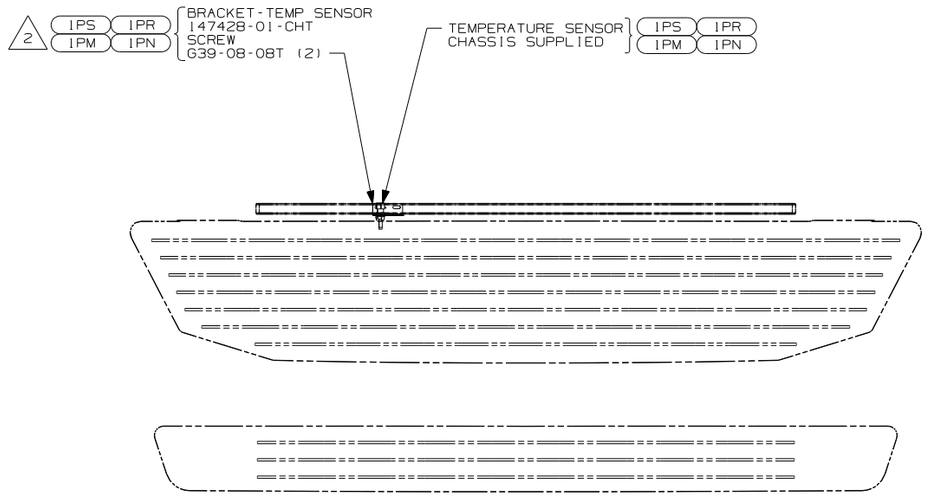

VIEW GA-GA
(F-SERIES)

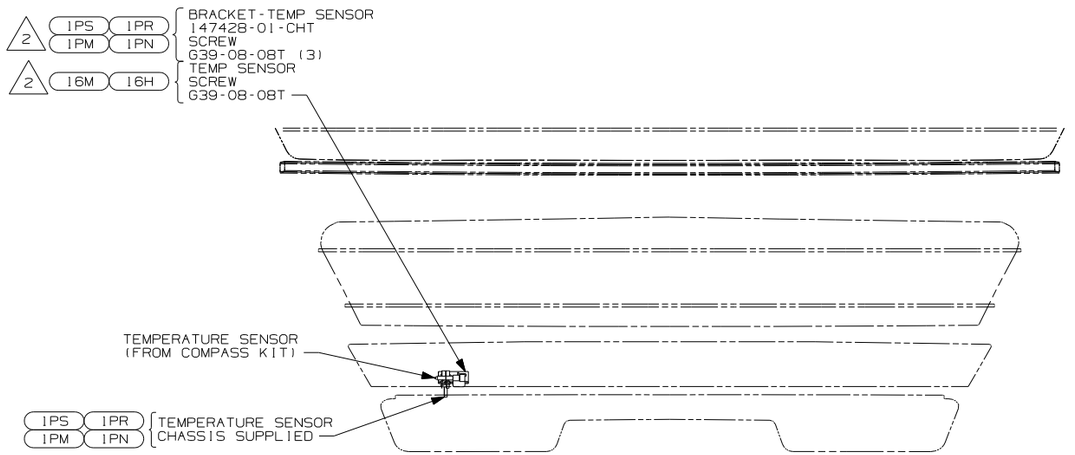

VIEW GA-GA
(G-SERIES)

WIN WINNEBAGO ONLY
1PS WORKHORSE 22,000#-22.5 TIRE
1PR WORKHORSE 22,000#-19.5 TIRE
16H FORD CHASSIS 18,000#/V10 ENG
1PN WORKHORSE 20,700#
16M FORD CHASSIS 20,500#/V10 ENG
1PM WORKHORSE CHASSIS-18,000LB.

WIN

2 MOUNT SENSOR OR SENSOR BRACKET TO HORIZONTAL TUBE ON FIBERGLASS AS SHOWN.

NOTES:

1. GATHER ALL EXCESS WIRE AFTER MAKING ALL CONNECTIONS AND BUNDLE AND SECURE WITH TIE-WIRE 8343-01-000 OR 93147-01-000.

FIRST USED 04 F&G SERIES

DO NOT SCALE DRAWING

TITLE: WIRING INSTL-FRONT END

SHEET 7 PART NO 144981

DWG NO 144981

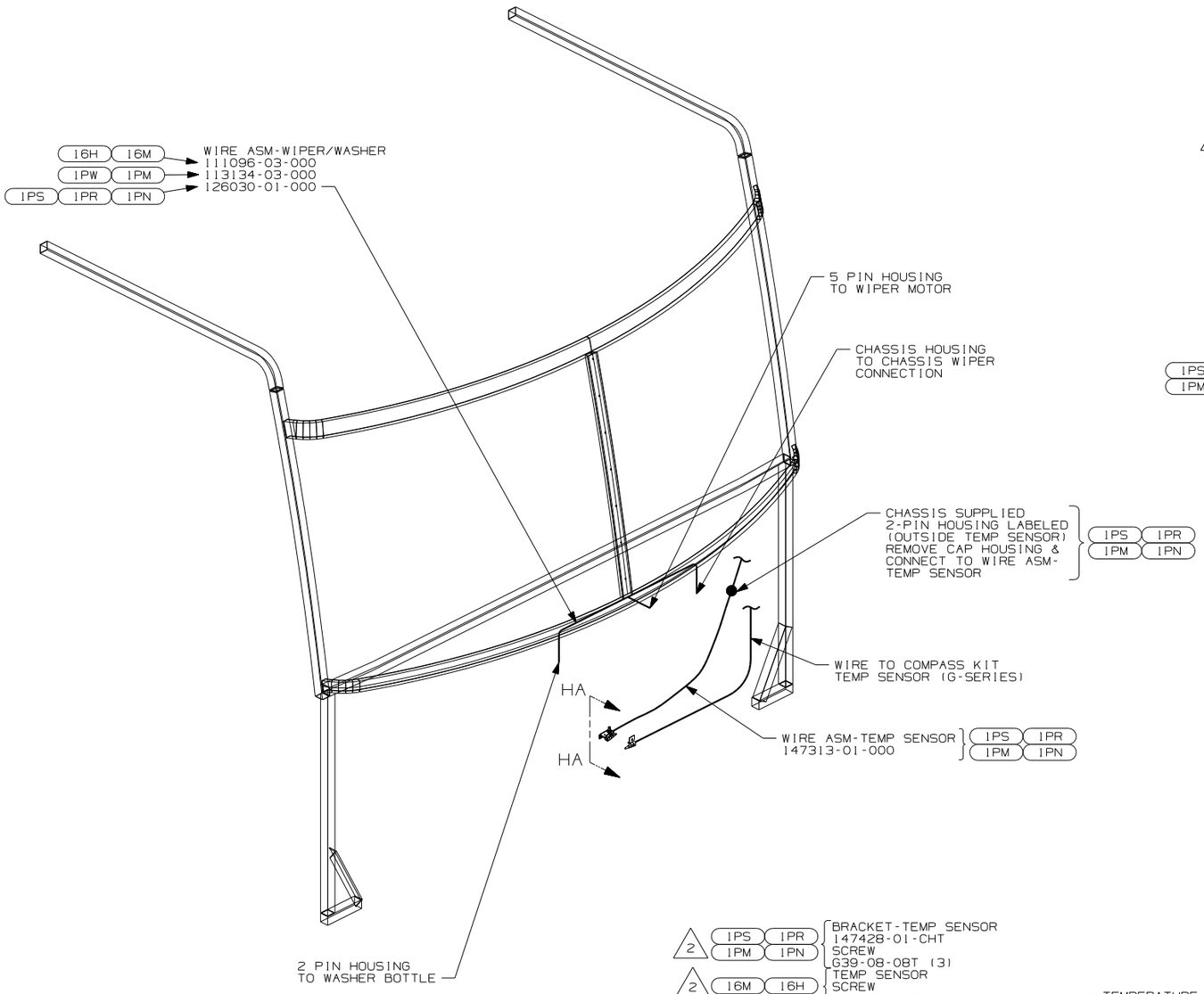

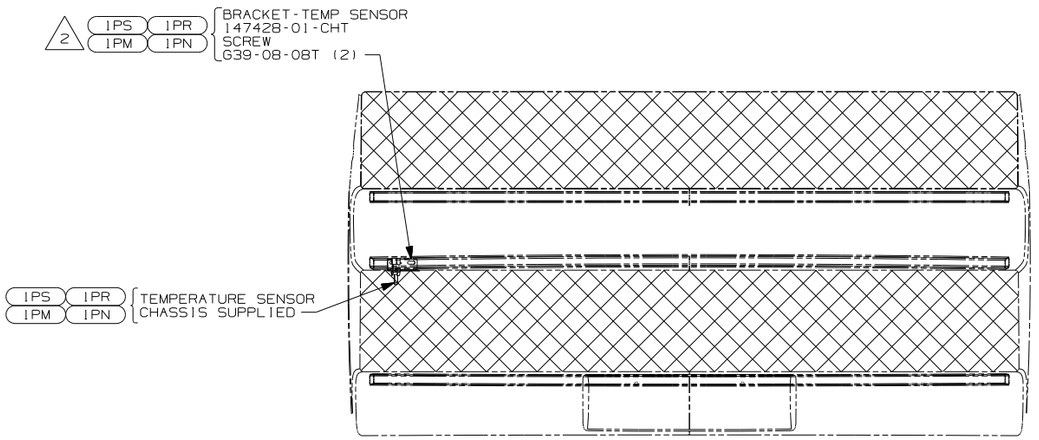

VIEW HA-HA
(F-SERIES)

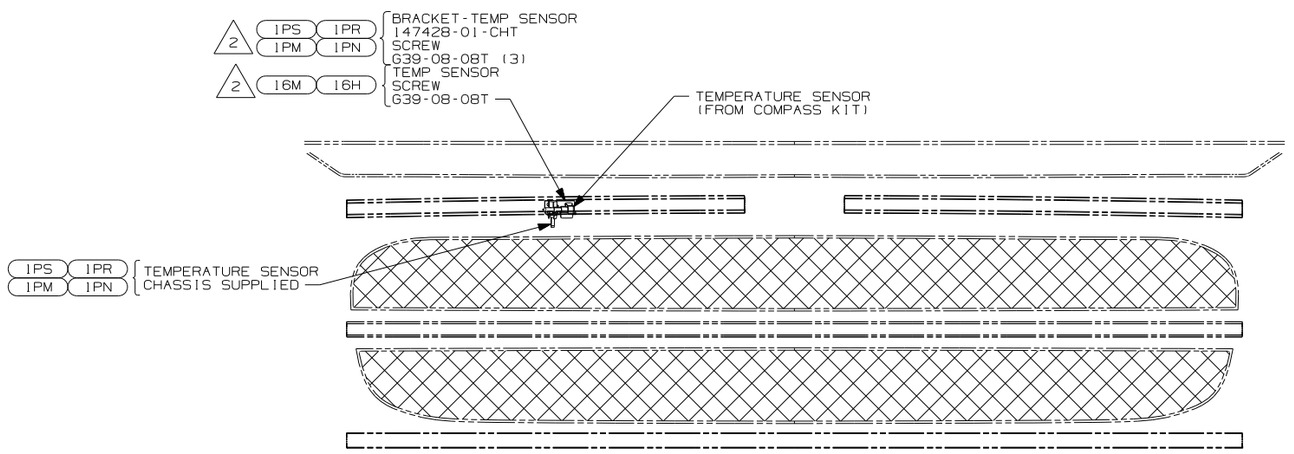

VIEW HA-HA
(G-SERIES)

1TA 1TASCA ONLY
1PS WORKHORSE 22,000#-22.5 TIRE
1PR WORKHORSE 22,000#-19.5 TIRE
16H FORD CHASSIS 18,000#/V10 ENG
1PN WORKHORSE 20,700#-19.5 TIRE
1PM WORKHORSE CHASSIS-18,000LB.
16M FORD CHASSIS 20,500#/V10 ENG

1TA

2 MOUNT SENSOR OR SENSOR BRACKET TO HORIZONTAL TUBE ON FIBERGLASS AS SHOWN.

1. GATHER ALL EXCESS WIRE AFTER MAKING ALL CONNECTIONS AND BUNDLE AND SECURE WITH TIE-WIRE 8343-01-000 OR 93147-01-000.

NOTES:

FIRST USED	04 F&G SERIES
DO NOT SCALE DRAWING	
TITLE:	WIRING INSTL-FRONT END
SHEET 8	PART NO 144981

DRAWING NO.	MODEL	SHEETS
148395-01	F-SERIES	1,3
148395-02	G-SERIES	1,3
148395-03	P-SERIES	2,3

RELEASE	REV A	DATE	DWG NO 148395
REV	ZONE	REVISION RECORD	DATE	DFTR-ORIG

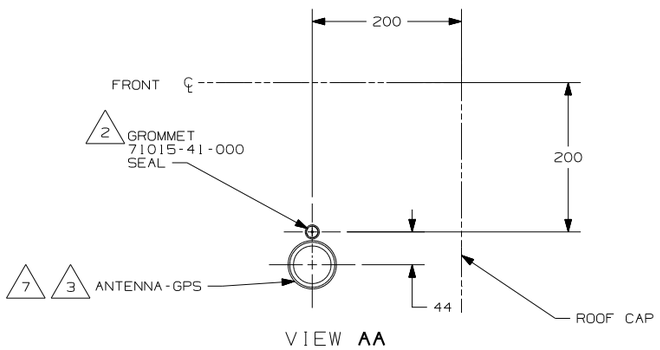

VIEW **AA**

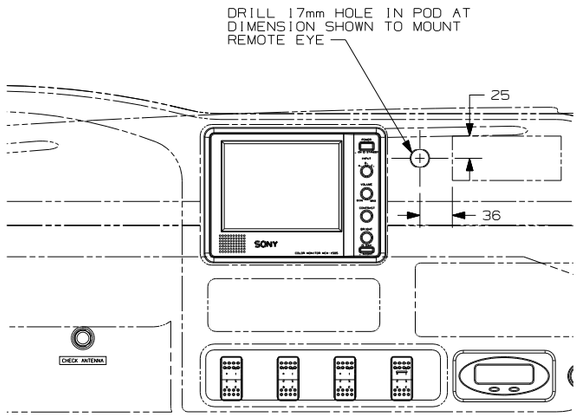

VIEW **AB**

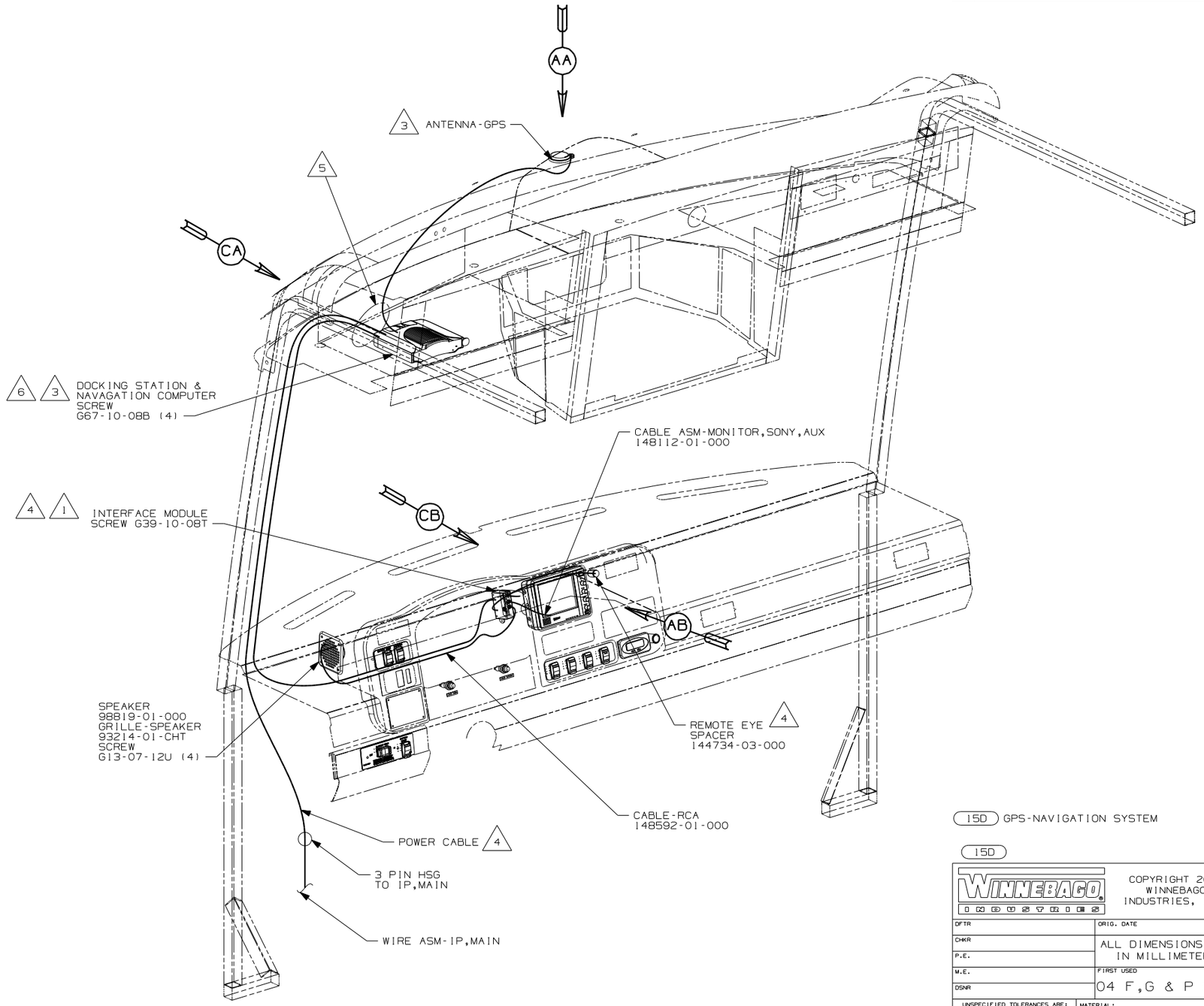

7 USE 076322-02-000 (100mm) TAPE-FOAM DBI COATED TO ATTACH ANTENNA-GPS TO ROOF.

6 DOCKING STATION MUST FACE EXACTLY STRAIGHT AHEAD AND PARALLEL WITH CENTER LINE OF COACH TO FUNCTION PROPERLY.

5 WIRES ROUTED THROUGH BACK OF OVERHEAD.

4 COMPONENT INCLUDED IN P/N 148158-02-000.

3 COMPONENT INCLUDED IN P/N 148158-01-000.

2 DRILL 15 mm HOLE IN FIBERGLASS CAP, CUT GROMMET AND SLIDE ANTENNA WIRE INTO GROMMET & SEAL.

1 MOUNT INTERFACE MODULE TO MONITOR SIDE OF STEEL BRACKET.

NOTES:

15D GPS-NAVIGATION SYSTEM

15D

COPYRIGHT 2004 WINNEBAGO INDUSTRIES, INC.

DFTR	ORIG. DATE
CHKR	ALL DIMENSIONS ARE IN MILLIMETERS
P.E.	
M.E.	FIRST USED
DSNR	04 F,G & P SER

UNSPECIFIED TOLERANCES ARE:
WHOLE DIM (X) :
ONE-PLACE (X.X) :
TWO-PLACE (X.XX) :
ANGLE :

MATERIAL:

THIRD ANGLE PROJECTION

DO NOT SCALE DRAWING

TITLE: WIRING INSTL-GPS

SHEET 1 OF 3 | PART NO 148395

REF: 1 9/14/2004

DWG NO 148395

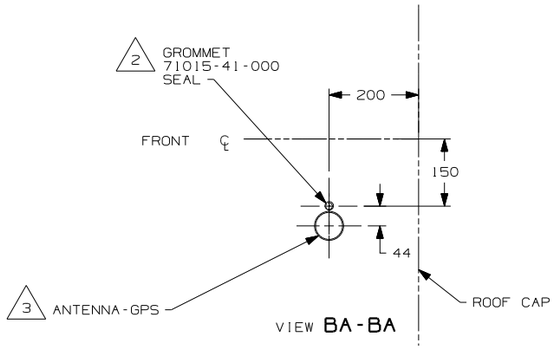

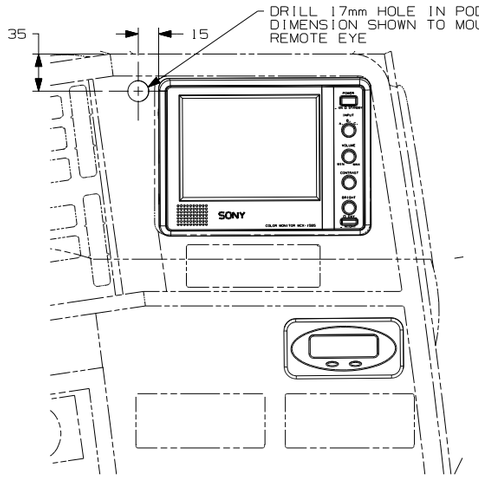

VIEW BB

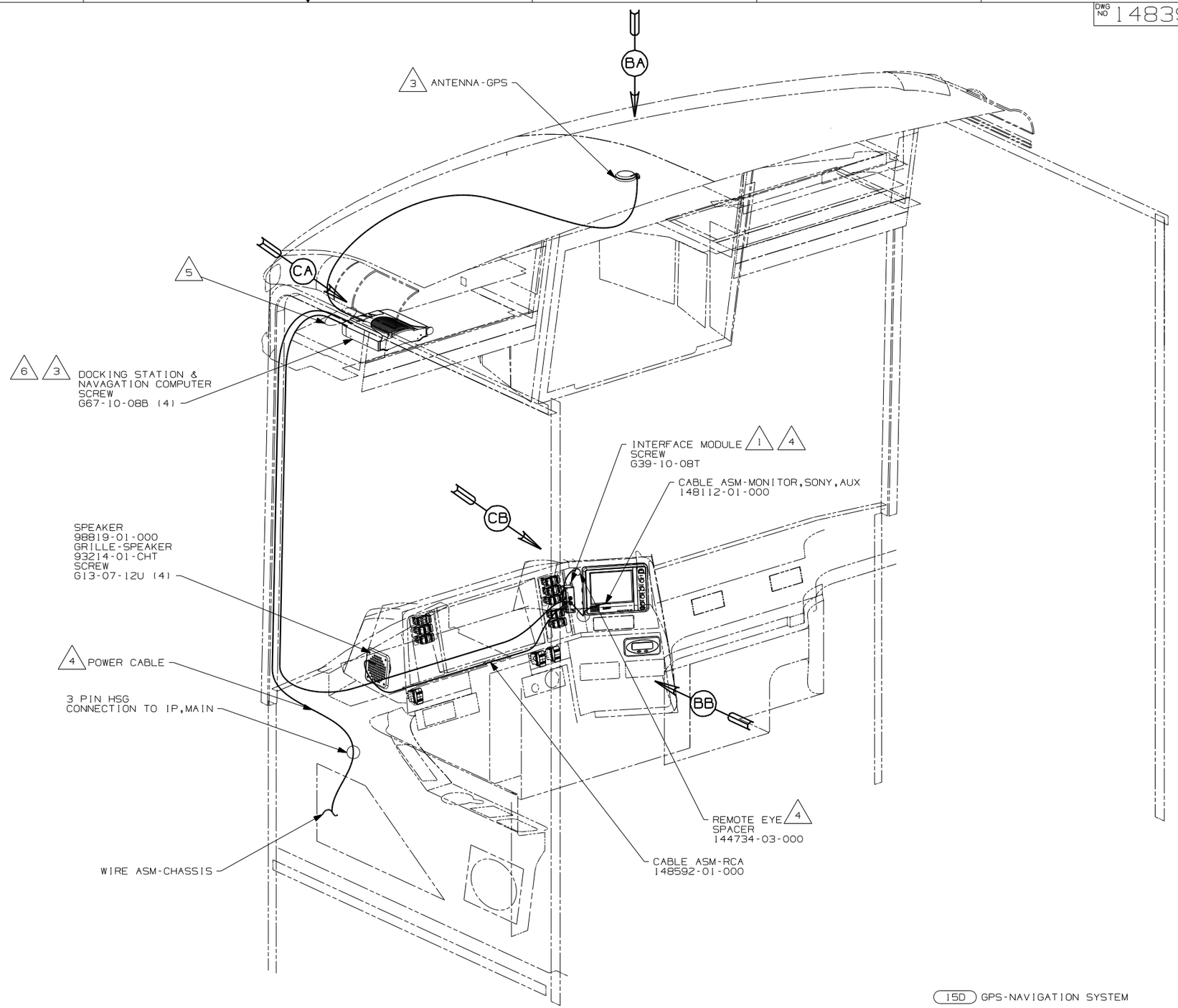

6 DOCKING STATION MUST FACE EXACTLY STRAIGHT AHEAD AND PARALLEL WITH CENTER LINE OF COACH TO FUNCTION PROPERLY.

5 WIRES ROUTED THROUGH BACK OF OVERHEAD.

4 COMPONENT INCLUDED IN P/N 148158-02-000.

3 COMPONENT INCLUDED IN P/N 148158-01-000.

2 DRILL 15 mm HOLE IN FIBERGLASS CAP, CUT GROMMET AND SLIDE ANTENNA WIRE INTO GROMMET & SEAL.

1 MOUNT INTERFACE MODULE TO MONITOR SIDE OF STEEL BRACKET.

NOTES:

15D GPS-NAVIGATION SYSTEM

15D

FIRST USED 04 P-SER

DO NOT SCALE DRAWING

TITLE: WIRING INSTL-GPS

SHEET 2 PART NO 148395

DWG NO 148395

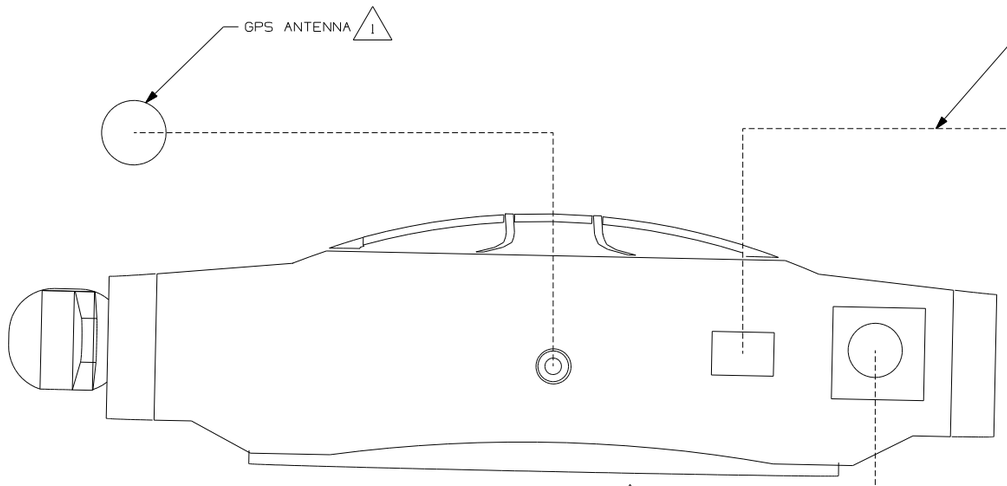

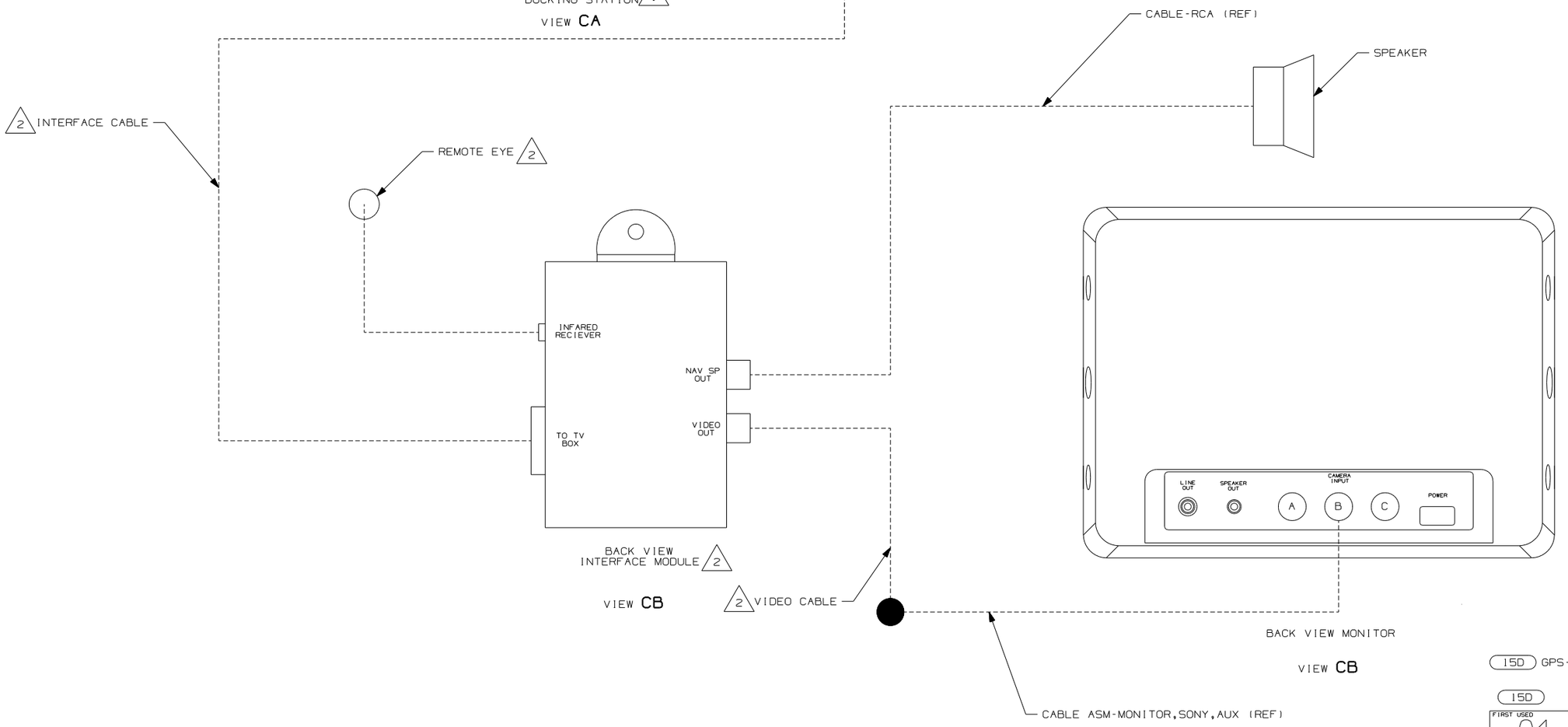

2 COMPONENT INCLUDED IN P/N 148158-02-000

1 COMPONENT INCLUDED IN P/N 148158-01-000

NOTES:

15D GPS-NAVIGATION SYSTEM

15D

FIRST USED	04 F,G & P SER
DO NOT SCALE DRAWING	
TITLE:	WIRING INSTL-GPS
SHEET 3	PART NO 148395

RELEASE	REV A	DATE	DWG NO 134940
REV	ZONE	REVISION RECORD	DATE / DFTR-ORIG

DWG NO		SHEET	WEIGHT(LBS.)
134940-01	W/GEN	1	8.90
134940-02	W/O GEN	2	-
134940-03	SWITCH,METER,HARNESS	---	-
134940-04	W/G SOLAR	3	-
134940-05	W/GEN SWIT	4	-
134940-06	W/GEN/SEN	5,6	-
134940-07	W/O GEN/SE	7,8	-
134940-08	W/G SOL/SE	9,10	-
134940-09	W/G SW/SEN	11,12	-

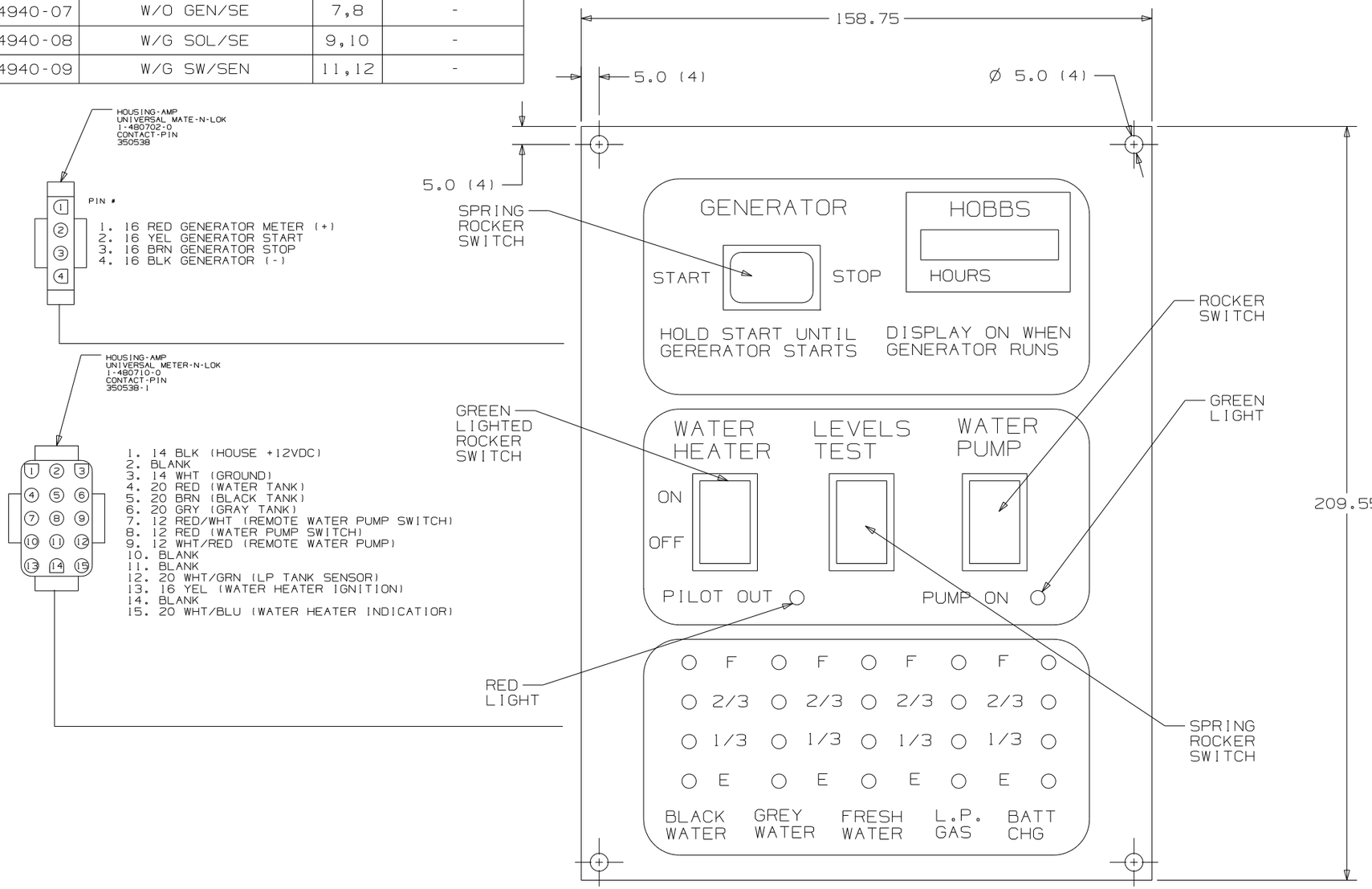

5. SWITCH RATING SHALL BE EMBOSSED ON THE SIDE OF THE 12V SWTICHES.
4. CUTOUT 130 X 192.
3. LETTERS ON MAIN HEADING TO BE 5MM HIGH.
2. BLACK PANEL WITH WHTIE GRAPHICS.
1. SUGGESTED VENDOR: VENTLINE.

NOTES:

SEE CHART
FOR COLOR VARIATIONS OF THIS PART

COPYRIGHT 2004 WINNEBAGO INDUSTRIES, INC.

DFTR	ORIG. DATE
CHKR	ALL DIMENSIONS ARE IN MILLIMETERS
P.E.	
M.E.	FIRST USED
DSNR	300 & F SER

UNSPECIFIED TOLERANCES ARE:
WHOLE DIM (X) : 1
ONE-PLACE (X.X) : 1.5
TWO-PLACE (X.XX) : 0.50
ANGLE : 1°

MATERIAL:

THIRD ANGLE PROJECTION

DO NOT SCALE DRAWING

TITLE: PANEL-MONITOR 2-TANK

SHEET 1 OF 12 | PART NO 134940

REF: 1 5/24/2004

DWG NO 134940

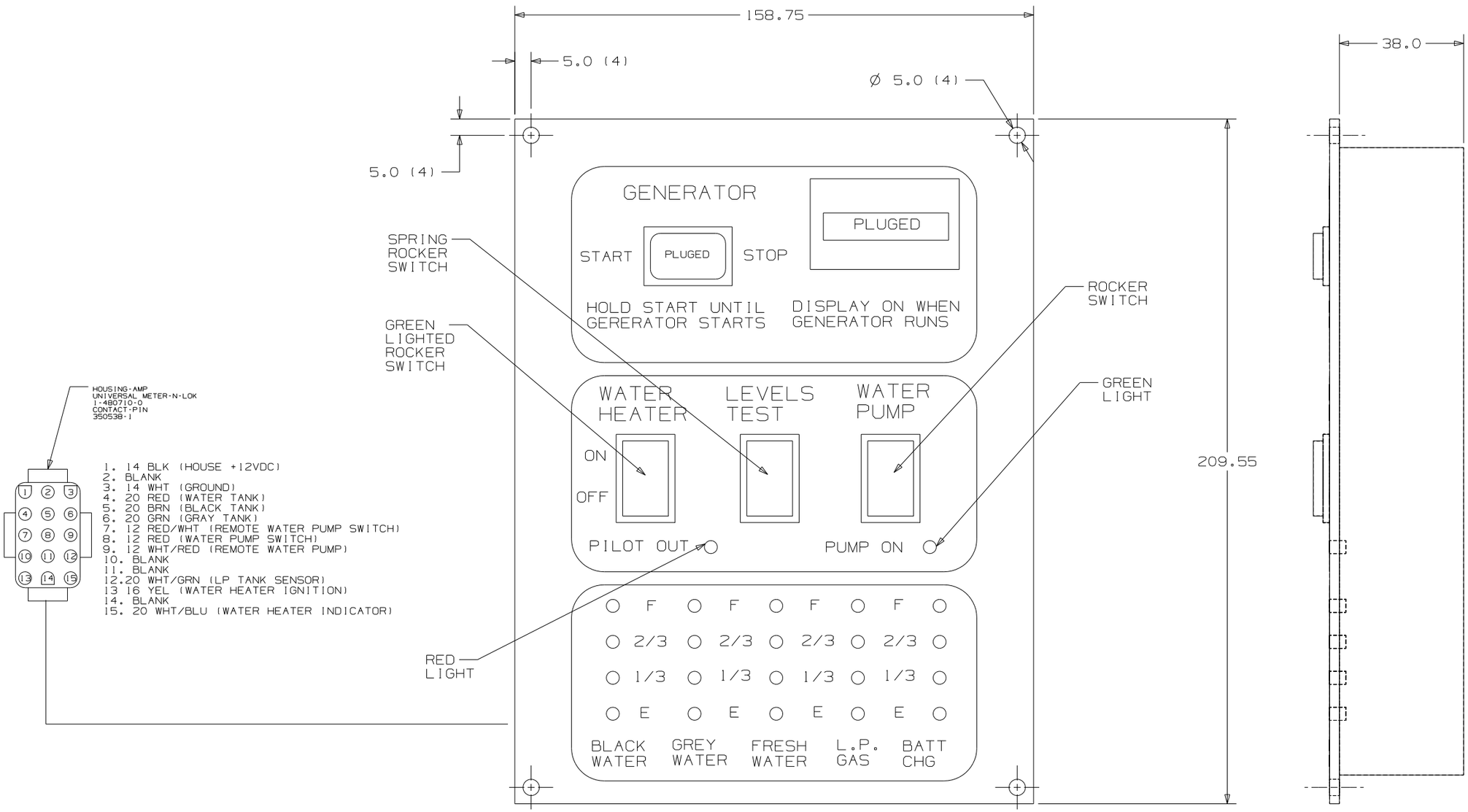

FIRST USED	300 & F SER
	DO NOT SCALE DRAWING
TITLE:	PANEL-MONITOR 2-TANK
SHEET 2	PART NO 134940

DWG NO 134940

HOUSING-AMP
(UNIVERSAL-MATE-N-LOK)
1-480698-0
PIN
350538-0

PIN #
1-16 BLK
2-16 RED

HOUSING-AMP
(UNIVERSAL-MATE-N-LOK)
1-480699-0
SOCKET
350537-1

PIN #
1-16 GRN
2-16 RED

HOUSING-AMP
UNIVERSAL MATE-N-LOK
1-480702-0
CONTACT-PIN
380538-1

PIN #
1-16 RED GENERATOR METER (+)
2-16 YEL GENERATOR START
3-16 BRN GENERATOR STOP
4-16 BLK GENERATOR (-)

HOUSING-AMP
UNIVERSAL METER-N-LOK
1-480710-0
CONTACT-PIN
350538-1

1. 14 BLK (HOUSE +12VDC)
2. BLANK
3. 14 WHT (GROUND)
4. 20 RED (WATER TANK)
5. 20 BRN (BLACK TANK)
6. 20 GRY (GRAY TANK)
7. 12 RED/WHT (REMOTE WATER PUMP SWITCH)
8. 12 RED (WATER PUMP SWITCH)
9. 12 WHT/RED (REMOTE WATER PUMP)
10. BLANK
11. BLANK
12. 20 WHT/GRN (LP TANK SENSOR)
13. 16 YEL (WATER HEATER IGNITION)
14. BLANK
15. 20 WHT/BLU (WATER HEATER INDICATOR)

SPRING ROCKER SWITCH

Ø 5.0 (4)

5.0 (4)

5.0 (4)

SOLAR CHARGING

WHEN LIT

HOLD STAT UNTIL GENERATOR STARTS

START

STOP

HOBBS

DISPLAY ON WHEN GENERATOR RUNS

GREEN LIGHTED ROCKER SWITCH

ROCKER SWITCH

GREEN LIGHT

WATER HEATER

LEVELS TEST

WATER PUMP

ON

OFF

PILOT OUT

PUMP ON

RED LIGHT

SPRING ROCKER SWITCH

F F F F

2/3 2/3 2/3 2/3

1/3 1/3 1/3 1/3

E E E E

BLACK WATER | GREY WATER | FRESH WATER | L.P. GAS | BATT CHG

209.55

158.75

38.0

FIRST USED	300 & F SER
	DO NOT SCALE DRAWING
TITLE:	PANEL-MONITOR 2-TANK
SHEET 3	PART NO 134940

DWG NO 134940

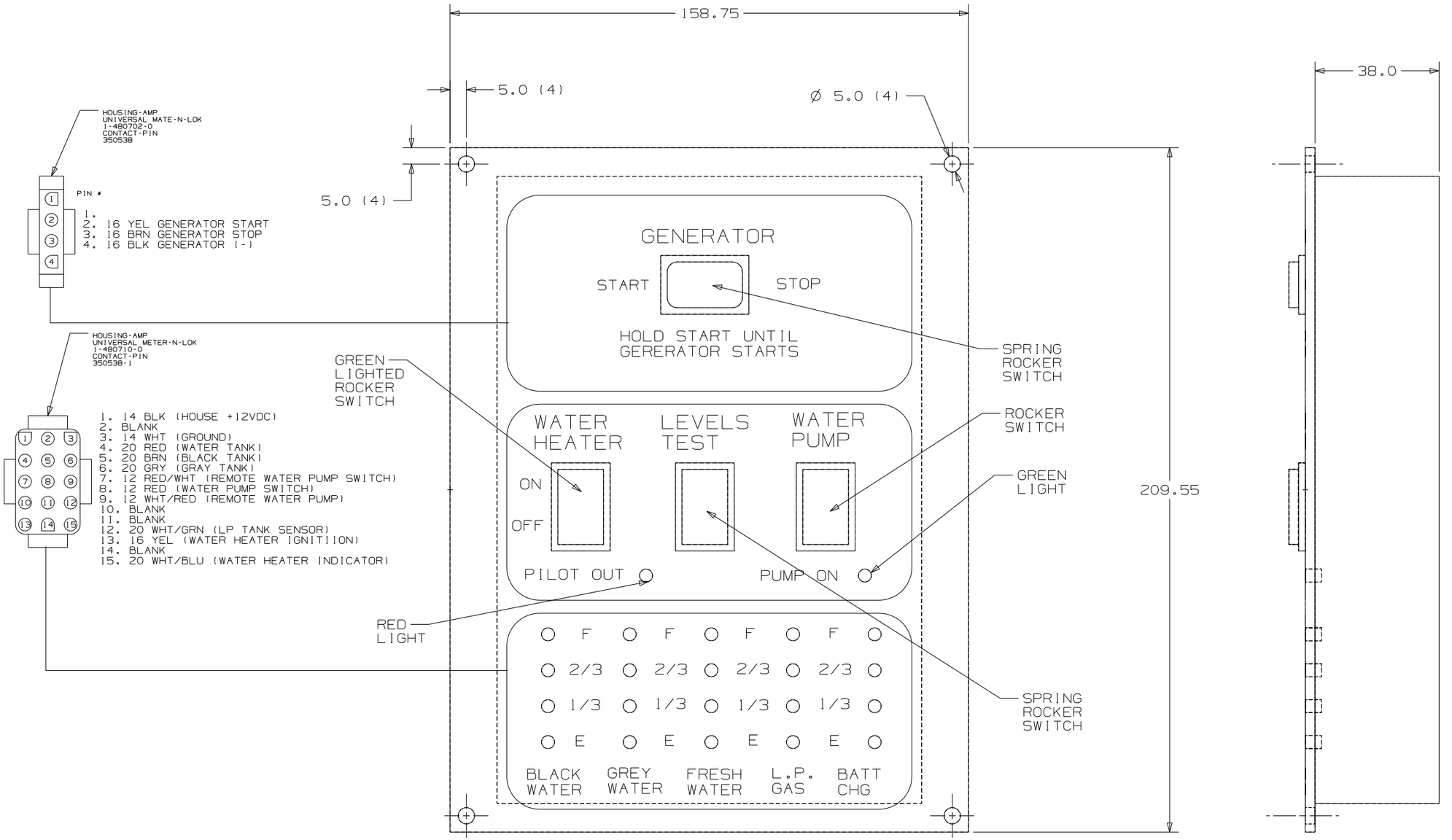

FIRST USED	300 & F SER
	DO NOT SCALE DRAWING
TITLE:	PANEL-MONITOR 2-TANK
SHEET 4	PART NO 134940

CONFIDENTIAL
THIS DOCUMENT, INCLUDING ALL INFORMATION CONTAINED HEREIN, IS THE EXCLUSIVE AND CONFIDENTIAL PROPERTY OF VENTLINE DIVISION OF TOWNS INDUSTRIES INC. THE DOCUMENT AND INFORMATION ARE NOT TO BE COPIED, REPRODUCED OR DELIVERED TO OTHERS, IN WHOLE OR IN PART, WITHOUT THE EXPRESS WRITTEN PERMISSION OF VENTLINE. THE DOCUMENT IS TO BE RETURNED PROMPTLY TO VENTLINE AFTER HAVING SERVED THE PURPOSE FOR WHICH DELIVERED.
©1995 VENTLINE DIVISION, TOWNS INDUSTRIES, INC.
All Rights Reserved, including the right to reproduce this document or any part thereof

LA1071-00 PAGE 1 OF 2

LTR.	DESCRIPTION	DATE	DWG. BY	CHK. BY
REL	RELEASED TO PURCHASING & PRODUCTION. ECN 16261	12/3/03	MPR	MPR
A	SEE SHEET 2 ECN 16381	4-6-04	RJL	RJL
A	SEE SHEET 2 ECN 16394	4-21-04	RJL	RJL

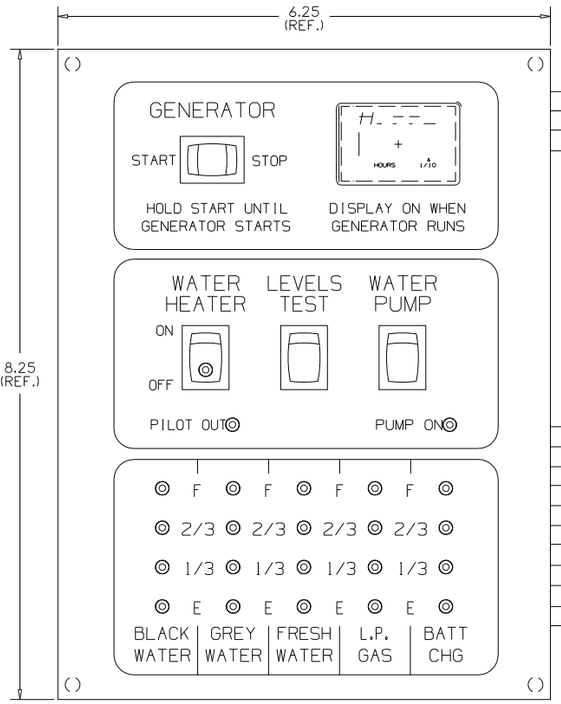

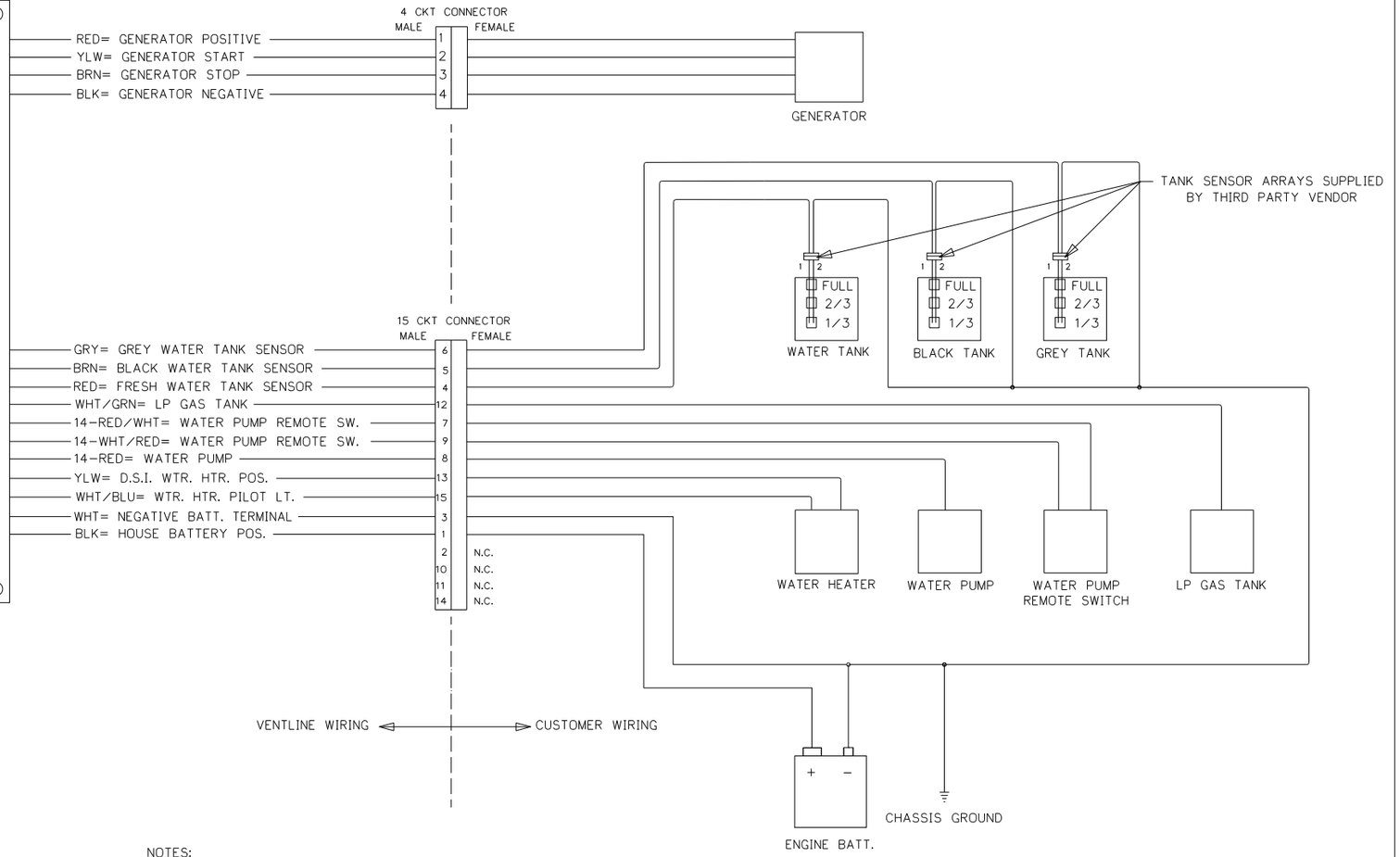

NOTES:

1. UNLESS OTHERWISE SPECIFIED ALL WIRE IS 22 AWG.
2. REF. DWG'S:
   GENERATOR HARNESS= L7751-00
   INTERNAL & SWITCH HARNESS= L7752-00
   PCB= L5131-02
   TEST HARNESS= L7753-00
   TEST BOX= L8506-00
3. ALL PIGTAILS TO BE SUPPLIED BY CUSTOMER.
4. BEFORE PACKING, SECURE HARNESS WITH VD0169-00 TIE WRAP ON RIGHT SIDE POST.

PART NO.	REQ'D	MATERIAL	DESCRIPTION	DWG SIZE

BLANK SIZE | USED ON WINNEBAGO
DRAWN DATE MPR 12/3/03 | MATERIAL SEE BOM PAGE 2 | PHILIPS IND. INC. VENTLINE DIVISION BRISTOL, INDIANA 46507
CHECKED DATE MPR 12/3/03 | NAME FUNCTION DRAWING MONITOR PANEL | SCALE: NONE
APPV'D DATE | DWG. NO. PAGE 1 OF 2 LA1071-00

ENGLISH (TOLERANCE UNLESS SPECIFIED)
0 PL.: .040 1 PL.: .020
2 PL.: .010 3 PL.: .005
FRACTIONS : 1/64

FIRST USED 05 D SEIRES
DO NOT SCALE DRAWING
TITLE: PANEL-MONITOR
SHEET 5 | PART NO 134940

CONFIDENTIAL
THIS DOCUMENT, INCLUDING ALL INFORMATION CONTAINED HEREIN, IS THE EXCLUSIVE AND CONFIDENTIAL PROPERTY OF VENTLINE DIVISION OF TOMKINS INDUSTRIES INC. THE DOCUMENT AND INFORMATION ARE NOT TO BE COPIED, REPRODUCED OR DELIVERED TO OTHERS, IN WHOLE OR IN PART, WITHOUT THE EXPRESS WRITTEN PERMISSION OF VENTLINE. THE DOCUMENT IS TO BE RETURNED PROMPTLY TO VENTLINE AFTER HAVING SERVED THE PURPOSE FOR WHICH DELIVERED.
©1995 VENTLINE DIVISION, TOMKINS INDUSTRIES, INC.
All Rights Reserved, including the right to reproduce this document or any part thereof

LTR.	DESCRIPTION	DATE	CHK. BY	CHK. BY
REL	RELEASED TO PURCHASING & PRODUCTION. ECN 16261	12/3/03	MPR	MPR
A	ADDED LABEL DETAIL ECN 16381	4-6-04	RJL	RJL
B	L5131-02 WAS L5118-02 ECN 16394	4-21-04	RJL	RJL

LA1071-00
FOR USE WITH NON-CONTACT SENSORS
(MFG DATE)

Ⓐ PRODUCT LABEL PRINTING DETAIL NO SCALE

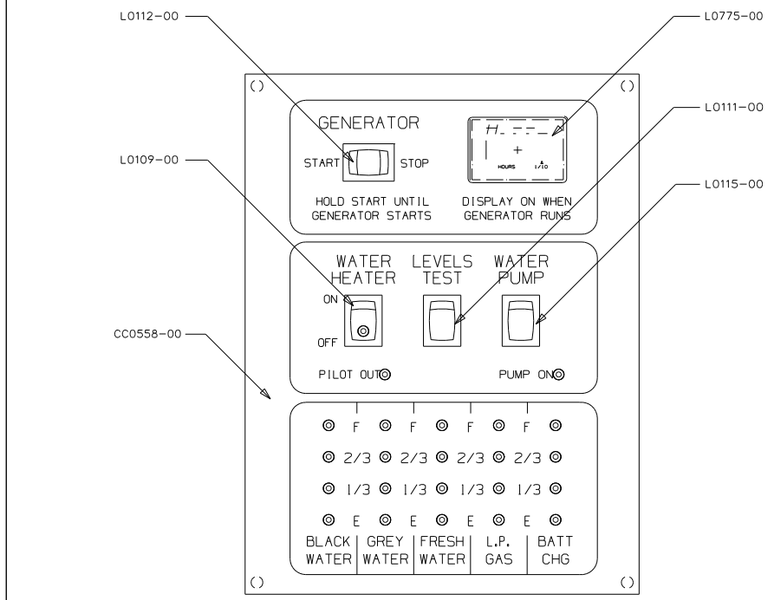

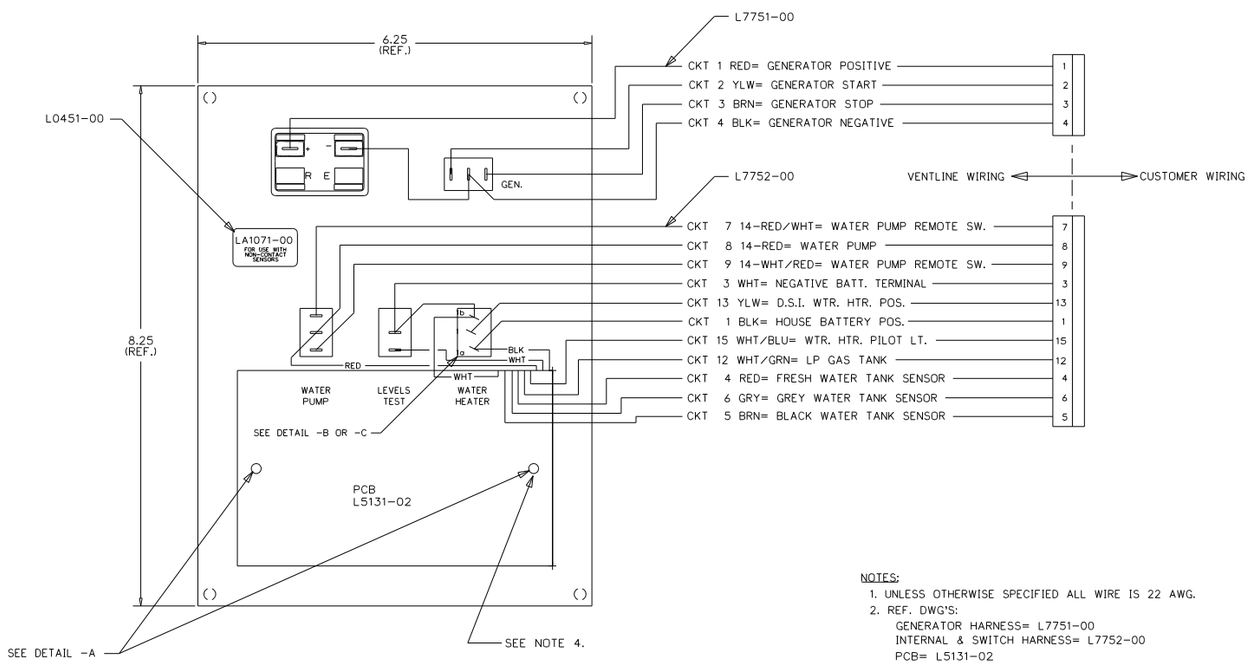

NOTES:
1. UNLESS OTHERWISE SPECIFIED ALL WIRE IS 22 AWG.
2. REF. DWG'S:
   GENERATOR HARNESS= L7751-00
   INTERNAL & SWITCH HARNESS= L7752-00
   PCB= L5131-02
   TEST HARNESS= L7753-00
   TEST BOX= L8506-00
3. ALL PIGTAILS TO BE SUPPLIED BY CUSTOMER.
4. BEFORE PACKING, SECURE HARNESS WITH VD0169-00 TIE WRAP ON RIGHT SIDE POST.

DETAIL -A
SHOWN APPROX. 2X SCALE

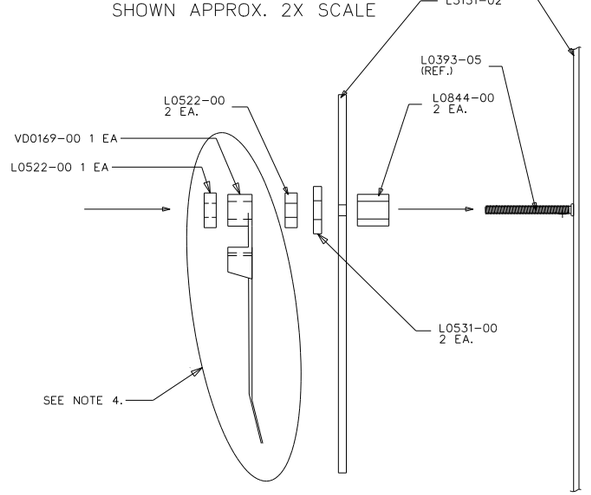

DETAIL -B
FOR L0109-00 "MARQUARDT"
SHOWN APPROX. 2X SCALE

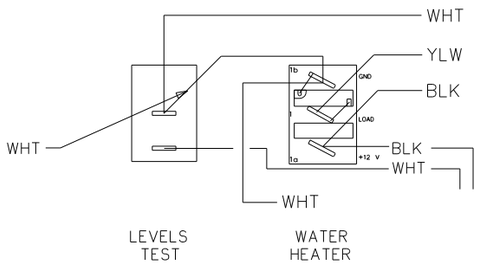

DETAIL -C
FOR L0109-00 "CARLINGSWITCH"
SHOWN APPROX. 2X SCALE

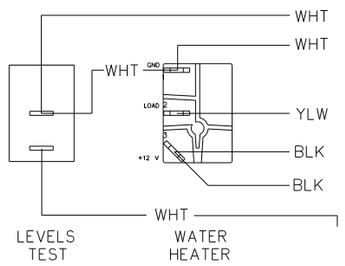

PART NO.	REQ'D	MATERIAL	DESCRIPTION	DWG SIZE
VD0169-00	1		TIE WRAP	
L7752-00	1		HARNESS, INTERNAL & SWITCH	
L7751-00	1		HARNESS, GENERATOR	
L5131-02	1		PCB	
L0775-00	1		HOBBS HOUR METER	
L0531-00	2		FIBER WASHER	
L0522-00	3		HEX NUT, 6-32	
L0451-00	1		LABEL - SEE PRINTING DETAIL ABOVE	
L0844-00	2		PCB SPACER	
L0115-00	1		SWITCH, SPDT ON-ON, BLK	
L0112-00	1		SWITCH, SPDT (ON)-OFF-(ON), BLK	
L0111-00	1		SWITCH, SPST MOM. (ON)-OFF, BLK	
L0109-00	1		SWITCH, SPST ON-OFF, BLK, GRN LT.	
CC0558-00	1		SILKSCREENED CHASSIS	

BLANK SIZE | USED ON WINNEBAGO
DRAWN MPR 11/20/03 | MATERIAL SEE BOM PAGE 2 | PHILIPS IND. INC. VENTLINE DIVISION BRISTOL, INDIANA 46507
CHECKED MPR 11/20/03 | NAME FUNCTION DRAWING, MONITOR PANEL | SCALE: NONE
APPV'D DATE | DWG. NO. LA1071-00 | PAGE 2 OF 2

ENGLISH (TOLERANCE UNLESS SPECIFIED)
0 PL.: .040 1 PL.: .020
2 PL.: .010 3 PL.: .005
FRACTIONS ±1/64

FIRST USED 05 D SEIRES
DO NOT SCALE DRAWING
TITLE: PANEL-MONITOR
SHEET 6 | PART NO 134940

CONFIDENTIAL
THIS DOCUMENT, INCLUDING ALL INFORMATION CONTAINED HEREIN, IS THE EXCLUSIVE AND CONFIDENTIAL PROPERTY OF VENTLINE DIVISION OF TOMKINS INDUSTRIES INC. THE DOCUMENT AND INFORMATION ARE NOT TO BE COPIED, REPRODUCED OR DELIVERED TO OTHERS, IN WHOLE OR IN PART, WITHOUT THE EXPRESS WRITTEN PERMISSION OF VENTLINE. THE DOCUMENT IS TO BE RETURNED PROMPTLY TO VENTLINE AFTER HAVING SERVED THE PURPOSE FOR WHICH DELIVERED.

©1995 VENTLINE DIVISION, TOMKINS INDUSTRIES, INC.
All Rights Reserved, including the right to reproduce this document or any part thereof

DWG NO 134940

LA1073-00
PAGE 1 OF 2

LTR.	DESCRIPTION	DATE	DR. BY	CK. BY
REL	RELEASED TO PURCHASING & PRODUCTION ECN 16261	12/3/03	MPR	MPR
A	SEE SHEET 2 ECN 16381	4-6-04	RJL	RJL
B	L5131-02 WAS L5118-02 ECN 16394	4-21-04	RJL	RJL

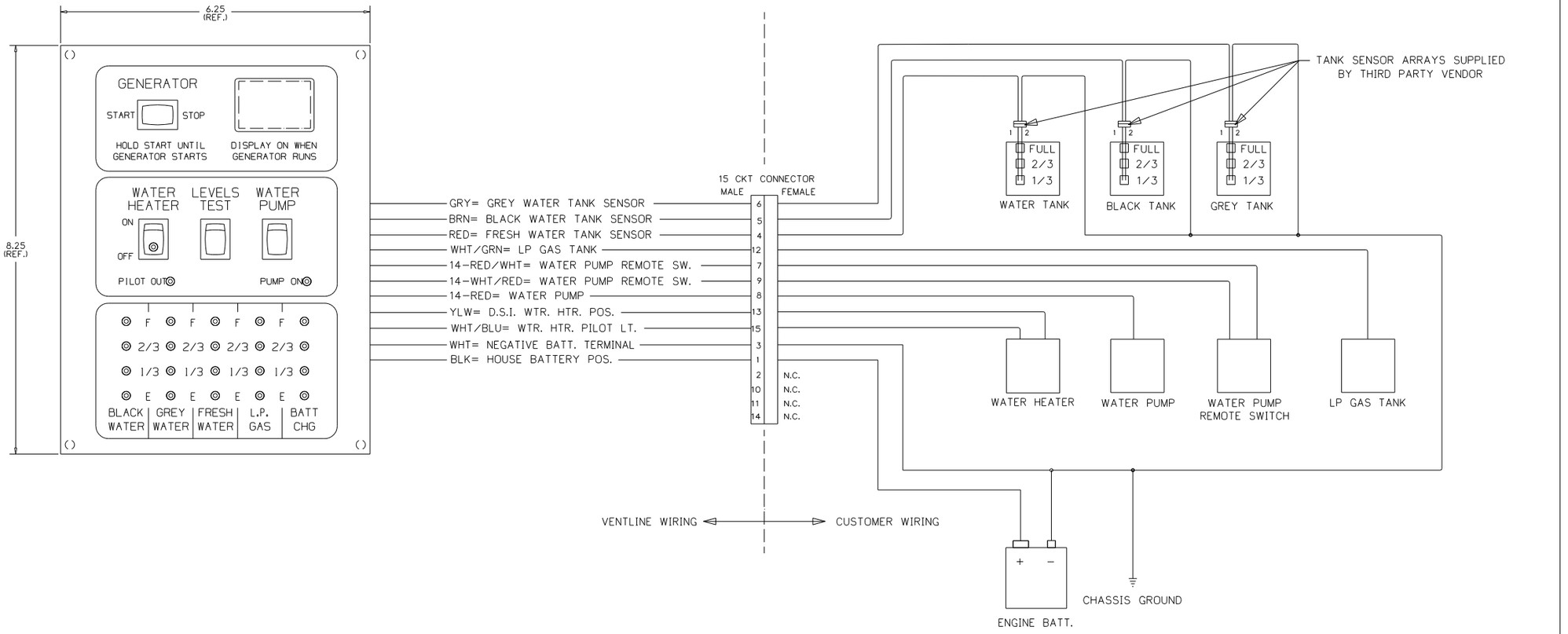

NOTES:
1. UNLESS OTHERWISE SPECIFIED ALL WIRE IS 22 AWG.
2. REF. DWG.'S:
   HARNESS, INTERNAL & SWITCH= L7752-00
   PCB= L5131-02
   HARNESS, TEST= L7753-00
   TEST BOX= L8506-00
3. ALL PIGTAILS TO BE SUPPLIED BY CUSTOMER.
4. BEFORE PACKING, SECURE HARNESS WITH VD0169-00 TIE WRAP ON RIGHT SIDE POST.

PART NO.	REQ'D	MATERIAL	DESCRIPTION	DWG SIZE

BLANK SIZE | USED ON: WINNEBAGO
DRAWN: MPR 11/21/03 | MATERIAL: SEE BOM PAGE 2
CHECKED: MPR 11/21/03 | NAME: FUNCTION DRAWING, MONITOR PANEL
APPV'D | DATE
PHILIPS IND., INC. VENTLINE DIVISION BRISTOL, INDIANA 46507
SCALE: NONE
DWG. NO. LA1073-00 PAGE 1 OF 2

ENGLISH (TOLERANCE UNLESS SPECIFIED)
0 PL.: .040 1 PL.: .020
2 PL.: .010 3 PL.: .005
FRACTIONS ±1/64

FIRST USED: 05 D SERIES
DO NOT SCALE DRAWING
TITLE: PANEL-MONITOR
SHEET 7 | PART NO 134940

CONFIDENTIAL
THIS DOCUMENT, INCLUDING ALL INFORMATION CONTAINED HEREIN, IS THE EXCLUSIVE AND CONFIDENTIAL PROPERTY OF VENTLINE DIVISION OF TOWMIN INDUSTRIES INC. THE DOCUMENT AND INFORMATION ARE NOT TO BE COPIED, REPRODUCED OR DELIVERED TO OTHERS, IN WHOLE OR IN PART, WITHOUT THE EXPRESS WRITTEN PERMISSION OF VENTLINE. THE DOCUMENT IS TO BE RETURNED PROMPTLY TO VENTLINE AFTER HAVING SERVED THE PURPOSE FOR WHICH DELIVERED.
©1995 VENTLINE DIVISION, TOWMIN INDUSTRIES, INC.
All Rights Reserved, including the right to reproduce this document or any part thereof

LA1073-00
PAGE 2 OF 2

LTR.	DESCRIPTION	DATE	DWG. BY	CHK. BY
REL	RELEASED TO PURCHASING & PRODUCTION ECN 16261	12/3/03	MPR	MPR
A	ADDED LABEL DETAIL ECN 16381	4-6-04	RJL	RJL
B	L5131-02 WAS L5118-02 ECN 16394	4-21-04	RJL	RJL

LA1073-00
FOR USE WITH NON-CONTACT SENSORS
(MFG DATE)

Ⓐ PRODUCT LABEL PRINTING DETAIL
NO SCALE

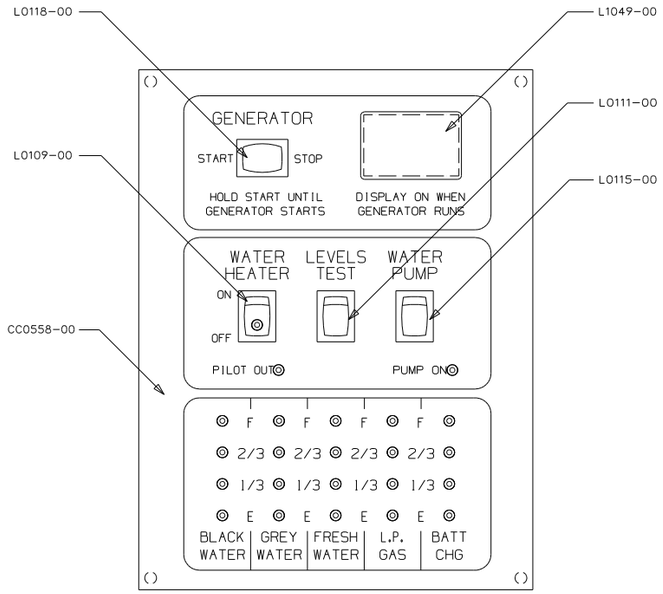

DETAIL -A
SHOWN APPROX. 2X SCALE

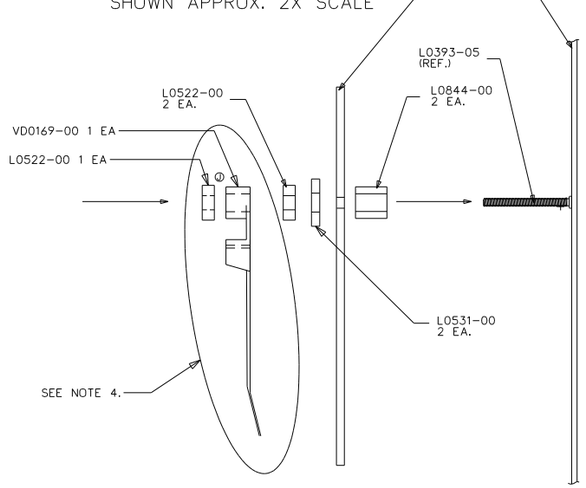

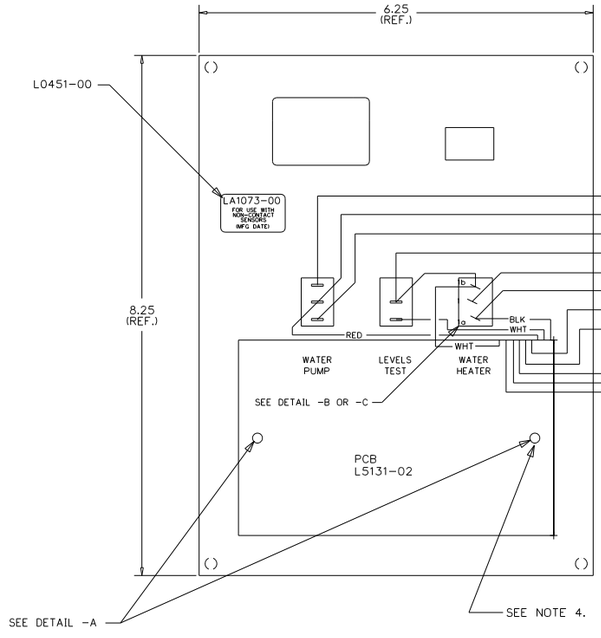

DETAIL -B
SHOWN APPROX. 2X SCALE

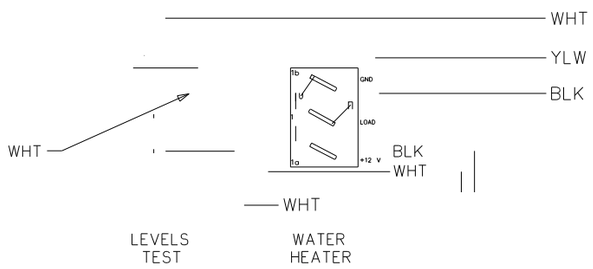

L7752-00

VENTLINE WIRING ⟷ CUSTOMER WIRING

CKT 7	14-RED/WHT= WATER PUMP REMOTE SW.	7
CKT 8	14-RED= WATER PUMP	8
CKT 9	14-WHT/RED= WATER PUMP REMOTE SW.	9
CKT 3	WHT= NEGATIVE BATT. TERMINAL	3
CKT 13	YLW= D.S.I. WTR. HTR. POS.	13
CKT 1	BLK= HOUSE BATTERY POS.	1
CKT 15	WHT/BLU= WTR. HTR. PILOT LT.	15
CKT 12	WHT/GRN= LP GAS TANK	12
CKT 4	RED= FRESH WATER TANK SENSOR	4
CKT 6	GRY= GREY WATER TANK SENSOR	6
CKT 5	BRN= BLACK WATER TANK SENSOR	5

NOTES:
1. UNLESS OTHERWISE SPECIFIED ALL WIRE IS 22 AWG.
2. REF. DWG.'S:
   HARNESS, INTERNAL & SWITCH= L7752-00
   PCB= L5131-02
   HARNESS, TEST= L7753-00
   TEST BOX= L8506-00
3. ALL PIGTAILS TO BE SUPPLIED BY CUSTOMER.
4. BEFORE PACKING, SECURE HARNESS WITH VD0169-00 TIE WRAP ON RIGHT SIDE POST.

PART NO.	REQ'D	MATERIAL	DESCRIPTION	DWG SIZE
VD0169-00	1		TIE WRAP WITH POST HOLE	
L7752-00	1		HARNESS, INTERNAL & SWITCH	
L5131-02	1		PCB	
L1049-00	1		HOLE PLUG	
L0531-00	4		FIBER WASHER	
L0522-00	3		HEX NUT, 6-32	
L0451-00	1		LABEL	
L0844-00	2		PCB SPACER	
L0118-00	1		SWITCH, DUMMY	
L0115-00	1		SWITCH, SPDT ON-ON, BLK	
L0111-00	1		SWITCH, SPST MOM. (ON)-OFF, BLK	
L0109-00	1		SWITCH, SPST ON-OFF, BLK, GRN LT.	
CC0558-00	1		SILKSCREENED CHASSIS	

BLANK SIZE | USED ON WINNEBAGO
DRAWN DATE: MPR 11/21/03 | MATERIAL: SEE BOM PAGE 2 | PHILIPS IND. INC., VENTLINE DIVISION, BRISTOL, INDIANA 46507
CHECKED DATE: MPR 11/21/03 | NAME: FUNCTION DRAWING, MONITOR PANEL | SCALE: NONE
APPV'D DATE | DWG. NO. PAGE 2 OF 2 LA1073-00

ENGLISH (TOLERANCE UNLESS SPECIFIED)
0 PL.: .040 | 1 PL.: .020
2 PL.: .010 | 3 PL.: .005
FRACTIONS ± 1/64

FIRST USED 05 D SERIES
DO NOT SCALE DRAWING
TITLE: PANEL-MONITOR
SHEET 8 | PART NO 134940

CONFIDENTIAL
THIS DOCUMENT, INCLUDING ALL INFORMATION CONTAINED HEREIN IS THE EXCLUSIVE AND CONFIDENTIAL PROPERTY OF VENTLINE DIVISION OF TOMKINS INDUSTRIES INC. THE DOCUMENT AND INFORMATION ARE NOT TO BE COPIED, REPRODUCED OR DELIVERED TO OTHERS, IN WHOLE OR IN PART, WITHOUT THE EXPRESS WRITTEN PERMISSION OF VENTLINE. THE DOCUMENT IS TO BE RETURNED PROMPTLY TO VENTLINE AFTER HAVING SERVED THE PURPOSE FOR WHICH DELIVERED.
©1995 VENTLINE DIVISION, TOMKINS INDUSTRIES, INC.
All Rights Reserved, including the right to reproduce this document or any part thereof

LA1074-00
PAGE 1 OF 2

LTR.	DESCRIPTION	DATE	DSG BY	CHK BY
REL	RELEASED TO PURCHASING & PRODUCTION. ECN 16261	12/3/03	MPR	MPR
A	SEE SHEET 2 ECN 16381	4-6-04	RJL	RJL
B	L5131-02 WAS L5118-02 ECN 16394	4-21-04	RJL	RJL

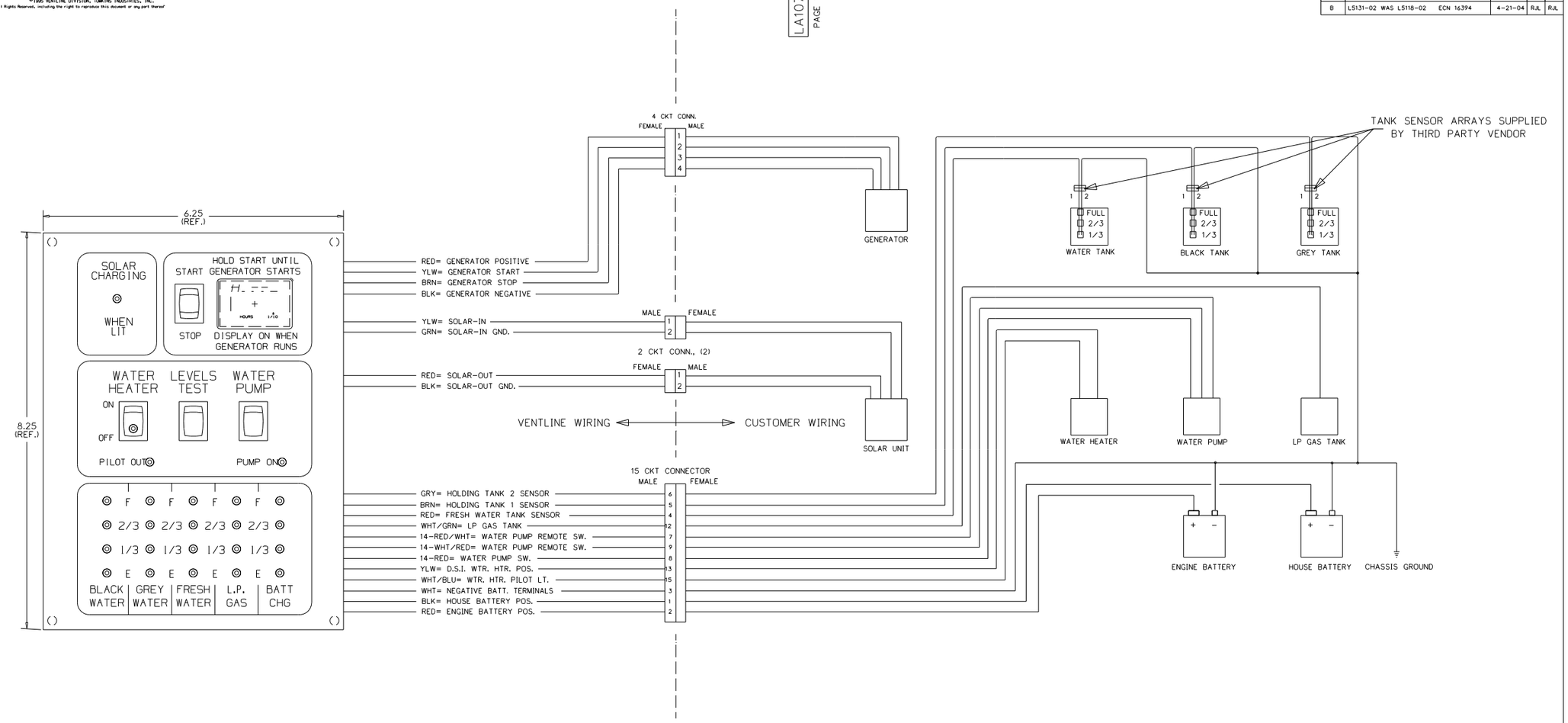

NOTES:
1. UNLESS OTHERWISE SPECIFIED ALL WIRE IS 22 AWG.
2. REF. DWG.'S:
   HARNESS, INTERNAL & SWITCH= L7752-00
   HARNESS, GEN. INTERNAL & SWITCH= L7786-00
   HARNESS, SOLAR LIGHT= L7722-00
   PCB= L5131-02
   HARNESS, TEST= L7753-00
   TEST BOX= L8506-00
3. ALL PIGTAILS TO BE SUPPLIED BY CUSTOMER.
4. BEFORE PACKING, SECURE HARNESS WITH VD0169-00 TIE WRAP ON RIGHT SIDE POST.

PART NO.	REQ'D	MATERIAL	DESCRIPTION	DWG SIZE

BLANK SIZE | USED ON: WINNEBAGO

DRAWN: MPR 11/21/03 | MATERIAL: SEE BOM PAGE 2

CHECKED: MPR 11/21/03 | APPV'D: | DATE

PHILIPS IND. INC. VENTLINE DIVISION BRISTOL, INDIANA 46507

NAME: FUNCTION DRAWING, MONITOR PANEL

SCALE: NONE

DWG. NO. PAGE 1 OF 2 LA1074-00

ENGLISH (TOLERANCE UNLESS SPECIFIED)
0 PL.: .040 1 PL.: .020
2 PL.: .010 3 PL.: .005
FRACTIONS ±1/64

FIRST USED: 05 D SERIES

DO NOT SCALE DRAWING

TITLE: PANEL-MONITOR

SHEET 9 | PART NO 134940

CONFIDENTIAL
THIS DOCUMENT, INCLUDING ALL INFORMATION CONTAINED HEREIN, IS THE EXCLUSIVE AND CONFIDENTIAL PROPERTY OF VENTLINE DIVISION OF TOMKINS INDUSTRIES INC. THE DOCUMENT AND INFORMATION ARE NOT TO BE COPIED, REPRODUCED OR DELIVERED TO OTHERS, IN WHOLE OR IN PART, WITHOUT THE EXPRESS WRITTEN PERMISSION OF VENTLINE. THE DOCUMENT IS TO BE RETURNED PROMPTLY TO VENTLINE AFTER HAVING SERVED THE PURPOSE FOR WHICH DELIVERED.
©1995 VENTLINE DIVISION, TOMKINS INDUSTRIES, INC.
All Rights Reserved, including the right to reproduce this document or any part thereof

DWG NO 134940

LA1074-00 PAGE 2 OF 2

LTR.	DESCRIPTION	DATE	CHG. BY	CHK. BY
REL.	RELEASED TO PURCHASING & PRODUCTION ECN 16261	12/3/03	MPR	MPR
A	ADDED LABEL DETAIL ECN 16381	4-6-04	RJL	RJL
B	L5131-02 WAS L5118-02 ECN 16394	4-21-04	RJL	RJL

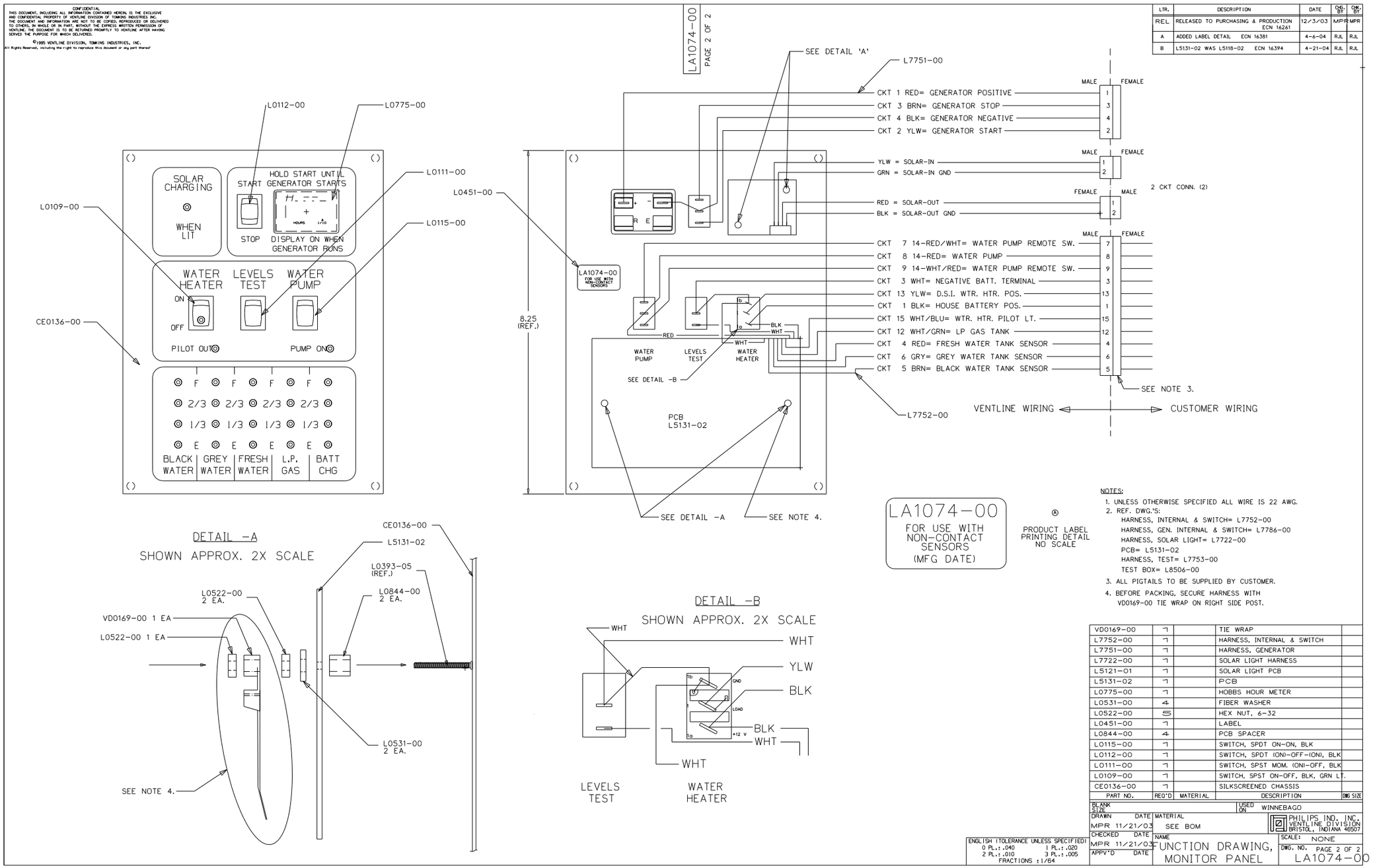

LA1074-00
FOR USE WITH NON-CONTACT SENSORS
(MFG DATE)

Ⓐ
PRODUCT LABEL PRINTING DETAIL
NO SCALE

NOTES:
1. UNLESS OTHERWISE SPECIFIED ALL WIRE IS 22 AWG.
2. REF. DWG.'S:
   HARNESS, INTERNAL & SWITCH= L7752-00
   HARNESS, GEN. INTERNAL & SWITCH= L7786-00
   HARNESS, SOLAR LIGHT= L7722-00
   PCB= L5131-02
   HARNESS, TEST= L7753-00
   TEST BOX= L8506-00
3. ALL PIGTAILS TO BE SUPPLIED BY CUSTOMER.
4. BEFORE PACKING, SECURE HARNESS WITH VD0169-00 TIE WRAP ON RIGHT SIDE POST.

PART NO.	REQ'D	MATERIAL	DESCRIPTION	DWG SIZE
VD0169-00	1		TIE WRAP	
L7752-00	1		HARNESS, INTERNAL & SWITCH	
L7751-00	1		HARNESS, GENERATOR	
L7722-00	1		SOLAR LIGHT HARNESS	
L5121-01	1		SOLAR LIGHT PCB	
L5131-02	1		PCB	
L0775-00	1		HOBBS HOUR METER	
L0531-00	4		FIBER WASHER	
L0522-00	5		HEX NUT, 6-32	
L0451-00	1		LABEL	
L0844-00	4		PCB SPACER	
L0115-00	1		SWITCH, SPDT ON-ON, BLK	
L0112-00	1		SWITCH, SPDT (ON)-OFF-(ON), BLK	
L0111-00	1		SWITCH, SPST MOM. (ON)-OFF, BLK	
L0109-00	1		SWITCH, SPST ON-OFF, BLK, GRN LT.	
CE0136-00	1		SILKSCREENED CHASSIS	

BLANK SIZE | USED ON WINNEBAGO
DRAWN DATE MPR 11/21/03 | MATERIAL SEE BOM
CHECKED DATE MPR 11/21/03
APPV'D DATE
NAME FUNCTION DRAWING, MONITOR PANEL
SCALE: NONE
DWG. NO. PAGE 2 OF 2 LA1074-00
PHILIPS IND., INC. VENTLINE DIVISION BRISTOL, INDIANA 46507

ENGLISH TOLERANCE UNLESS SPECIFIED
0 PL.: .040 1 PL.: .020
2 PL.: .010 3 PL.: .005
FRACTIONS ±1/64

FIRST USED 05 D SERIES
DO NOT SCALE DRAWING
TITLE: PANEL-MONITOR
SHEET 10 | PART NO 134940

CONFIDENTIAL
THIS DOCUMENT, INCLUDING ALL INFORMATION CONTAINED HEREIN, IS THE EXCLUSIVE AND CONFIDENTIAL PROPERTY OF VENTLINE DIVISION OF TOMKINS INDUSTRIES INC. THE DOCUMENT AND INFORMATION ARE NOT TO BE COPIED, REPRODUCED OR DELIVERED TO OTHERS, IN WHOLE OR IN PART, WITHOUT THE EXPRESS WRITTEN PERMISSION OF VENTLINE. THE DOCUMENT IS TO BE RETURNED PROMPTLY TO VENTLINE AFTER HAVING SERVED THE PURPOSE FOR WHICH DELIVERED.
©1995 VENTLINE DIVISION, TOMKINS INDUSTRIES, INC.
All Rights Reserved, including the right to reproduce this document or any part thereof

DWG NO 134940

LA1075-00
PAGE 1 OF 2

LTR.	DESCRIPTION	DATE	DWG. BY	CHK. BY
REL	RELEASED TO PURCHASING AND PRODUCTION ECN 16261	12/3/03	MPR	MPR
A	SEE SHEET 2 ECN 16381	4-6-04	RJL	RJL
B	L5131-02 WAS L5118-02 ECN 16394	4-21-04	RJL	RJL

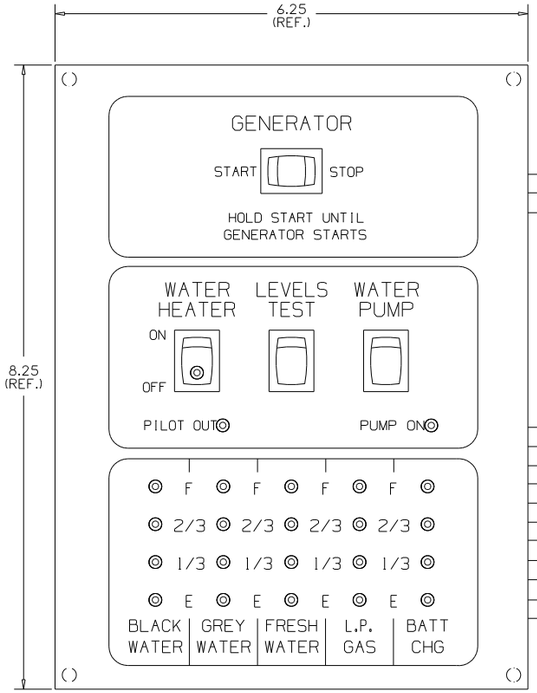

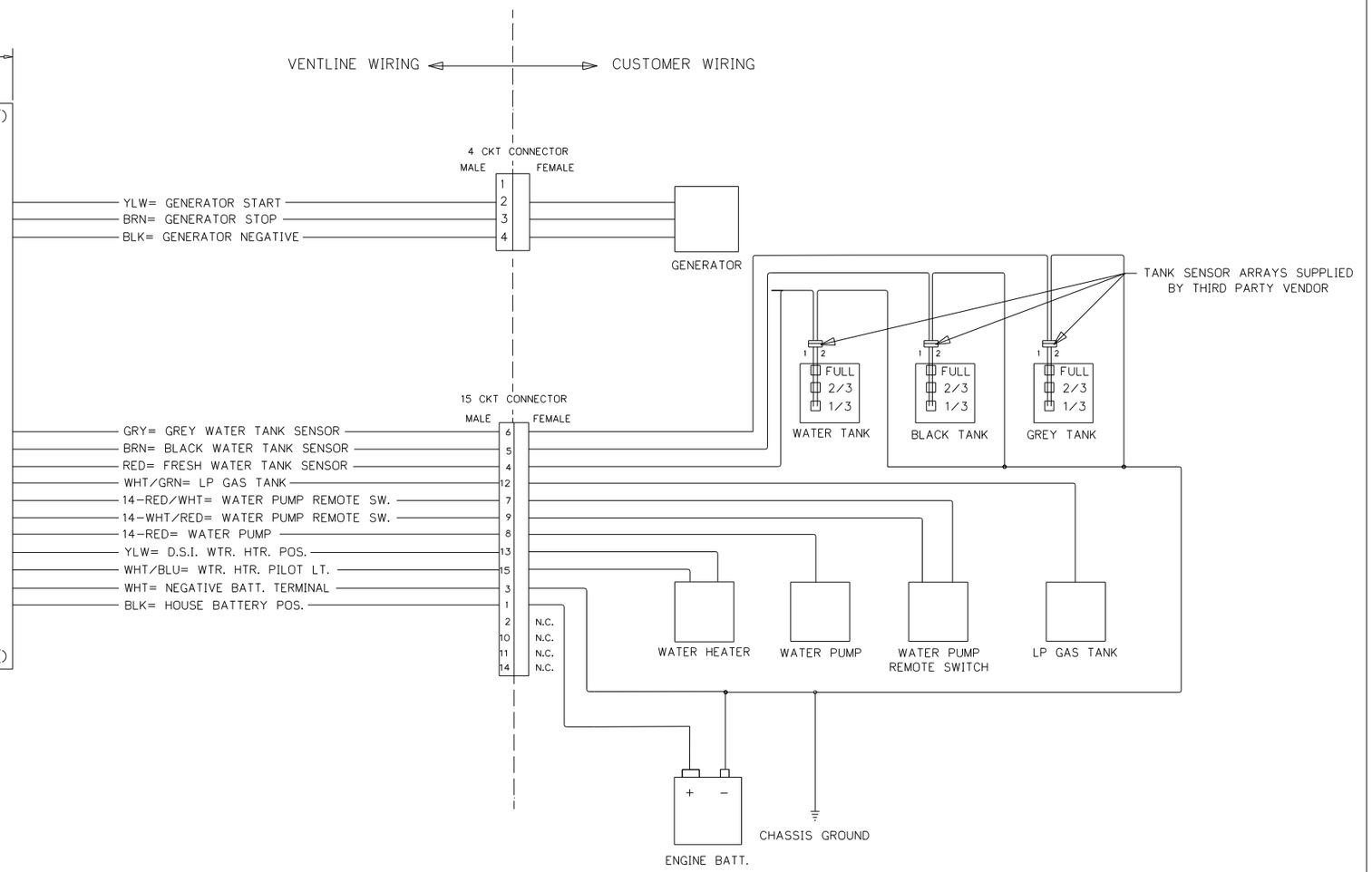

NOTES:
1. UNLESS OTHERWISE SPECIFIED ALL WIRE IS 22 AWG.
2. REF. DWG.'S:
   HARNESS, INTERNAL & SWITCH= L7752-00
   HARNESS, GEN. INTERNAL & SWITCH= L7786-00
   HARNESS, SOLAR LIGHT= L7722-00
   PCB= L5131-02
   HARNESS, TEST= L7753-00
   TEST BOX= L8506-00
3. ALL PIGTAILS TO BE SUPPLIED BY CUSTOMER.
4. BEFORE PACKING, SECURE HARNESS WITH VD0169-00 TIE WRAP ON RIGHT SIDE POST.

PART NO.	REQ'D	MATERIAL	DESCRIPTION	DWG SIZE
BLANK SIZE			USED ON WINNEBAGO	

DRAWN MPR 11/21/03 DATE
MATERIAL SEE BOM PAGE 2
CHECKED MPR 11/21/03 DATE
APPV'D DATE
PHILIPS IND. INC. VENTLINE DIVISION BRISTOL, INDIANA 46507
NAME FUNCTION DRAWING, MONITOR PANEL
SCALE: NONE
DWG. NO. PAGE 1 OF 2 LA1075-00

ENGLISH (TOLERANCE UNLESS SPECIFIED)
0 PL.: .040 1 PL.: .020
2 PL.: .010 3 PL.: .005
FRACTIONS ±1/64

FIRST USED 06 500 SERIES

DO NOT SCALE DRAWING

TITLE: PANEL-MONITOR

SHEET 1 1 PART NO 134940

CONFIDENTIAL
THIS DOCUMENT, INCLUDING ALL INFORMATION CONTAINED HEREIN, IS THE EXCLUSIVE AND CONFIDENTIAL PROPERTY OF VENTLINE DIVISION OF TOMKINS INDUSTRIES INC. THE DOCUMENT AND INFORMATION ARE NOT TO BE COPIED, REPRODUCED OR DELIVERED TO OTHERS, IN WHOLE OR IN PART, WITHOUT THE EXPRESS WRITTEN PERMISSION OF VENTLINE. THE DOCUMENT IS TO BE RETURNED PROMPTLY TO VENTLINE AFTER HAVING SERVED THE PURPOSE FOR WHICH DELIVERED.
©1995 VENTLINE DIVISION, TOMKINS INDUSTRIES, INC.,
All Rights Reserved, including the right to reproduce this document or any part thereof

LA1075-00
PAGE 2 OF 2

LTR.	DESCRIPTION	DATE	CHG. BY	CHK. BY
REL	RELEASED TO PURCHASING AND PRODUCTION ECN 16261	12/3/03	MPR	MPR
A	ADDED LABEL DETAIL ECN 16381	4-6-04	RJL	RJL
B	L5131-02 WAS L5118-02 ECN 16394	4-21-04	RJL	RJL

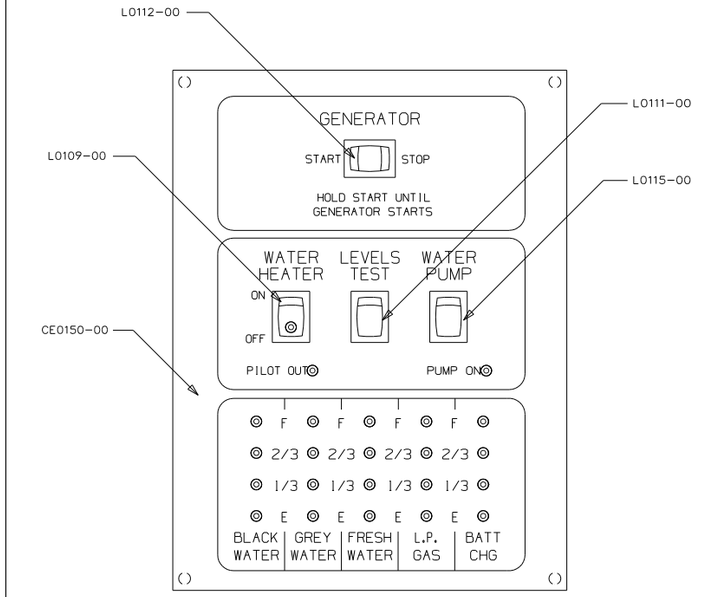

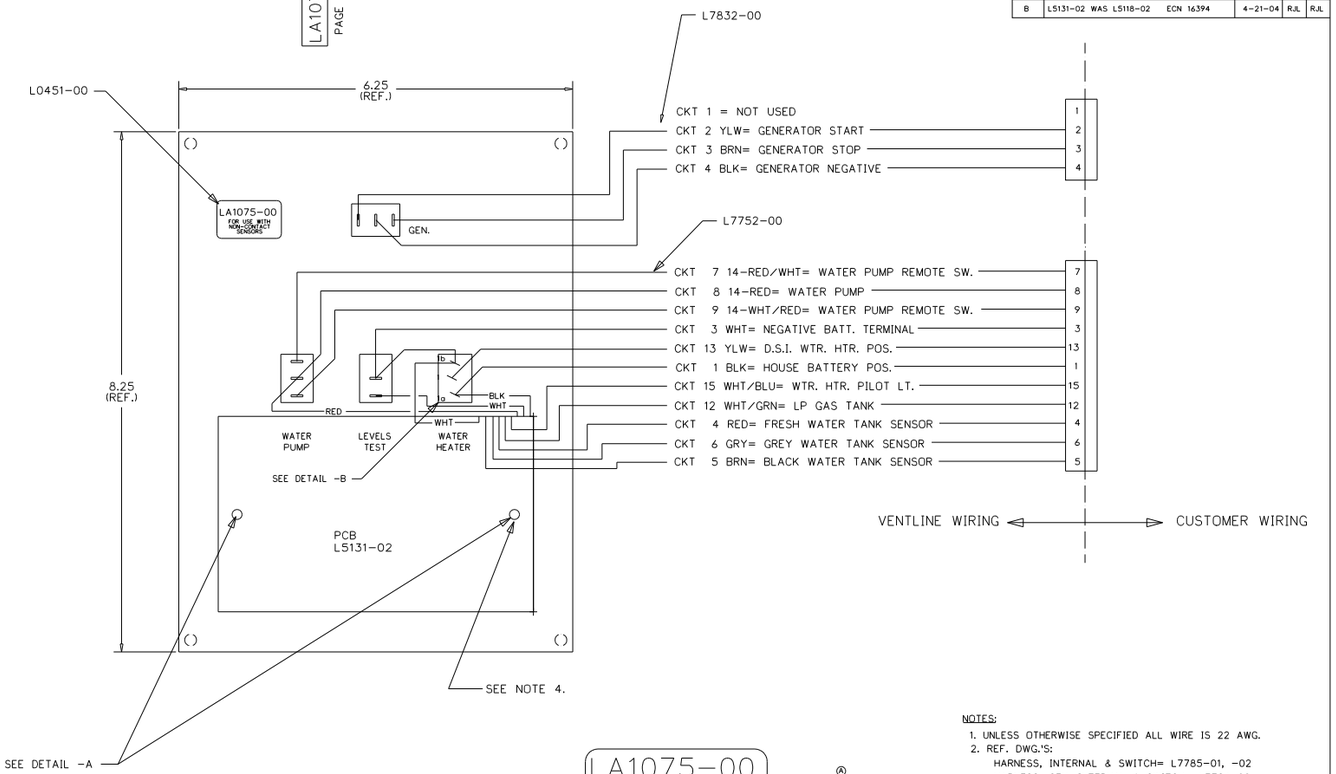

DETAIL -A
SHOWN APPROX. 2X SCALE

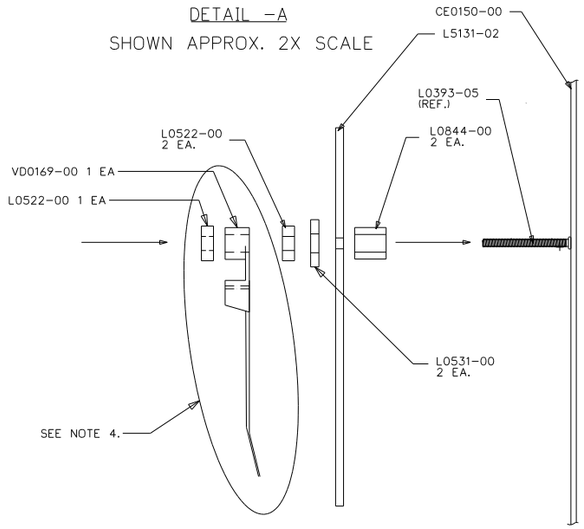

DETAIL -B
SHOWN APPROX. 2X SCALE

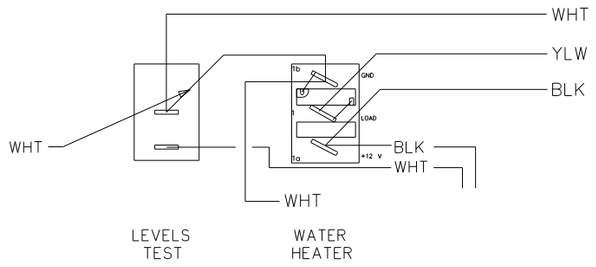

LA1075-00
FOR USE WITH NON-CONTACT SENSORS
(MFG DATE)

Ⓐ PRODUCT LABEL PRINTING DETAIL NO SCALE

NOTES:
1. UNLESS OTHERWISE SPECIFIED ALL WIRE IS 22 AWG.
2. REF. DWG.'S:
   HARNESS, INTERNAL & SWITCH= L7785-01, -02
   HARNESS, GEN. INTERNAL & SWITCH= L7786-00
   PCB= L5131-02
   HARNESS, TEST= L8012-00
   TEST BOX= L8506-00
3. ALL PIGTAILS TO BE SUPPLIED BY CUSTOMER.
4. BEFORE PACKING, SECURE HARNESS WITH VD0169-00 TIE WRAP ON RIGHT SIDE POST.

PART NO.	REQ'D	MATERIAL	DESCRIPTION	DWG SIZE
VD0169-00	1		TIE WRAP	
L7752-00	1		HARNESS, INTERNAL & SWITCH	
L7832-00	1		HARNESS, GENERATOR	
L5131-02	1		PCB	
L0531-00	2		FIBER WASHER	
L0522-00	3		HEX NUT, 6-32	
L0451-00	1		LABEL	
L0844-00	2		PCB SPACER	
L0115-00	1		SWITCH, SPDT ON-ON, BLK	
L0112-00	1		SWITCH, SPDT (ON)-OFF-(ON), BLK	
L0111-00	1		SWITCH, SPST MOM. (ON)-OFF, BLK	
L0109-00	1		SWITCH, SPST ON-OFF, BLK, GRN LT.	
CE0150-00	1		SILKSCREENED CHASSIS	

BLANK SIZE | USED ON WINNEBAGO
DRAWN MPR 11/21/03 | MATERIAL SEE BOM
CHECKED MPR 11/21/03 | NAME FUNCTION DRAWING, MONITOR PANEL
APPV'D DATE
PHILIPS IND., INC. VENTLINE DIVISION BRISTOL, INDIANA 46507
SCALE: NONE
DWG. NO. PAGE 2 OF 2 LA1075-00

ENGLISH (TOLERANCE UNLESS SPECIFIED)
0 PL.: .040 | 1 PL.: .020
2 PL.: .010 | 3 PL.: .005
FRACTIONS ± 1/64

FIRST USED 06 500 SERIES
DO NOT SCALE DRAWING
TITLE: PANEL-MONITOR
SHEET 12 | PART NO 134940

RELEASE	REV A	DATE	DWG NO 110664
REV	ZONE	REVISION RECORD	DATE	DFTR-ORIG

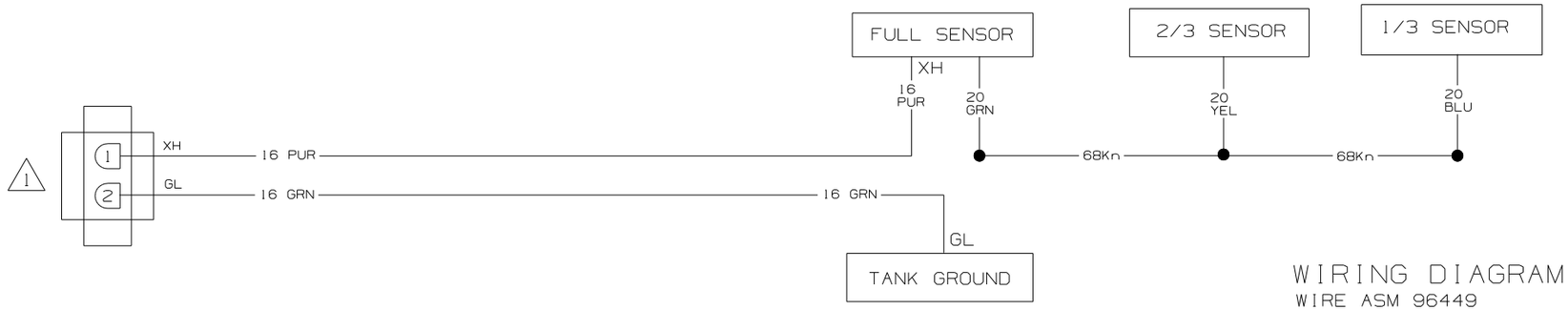

WIRING DIAGRAM-TANK, WATER
WIRE ASM 96449

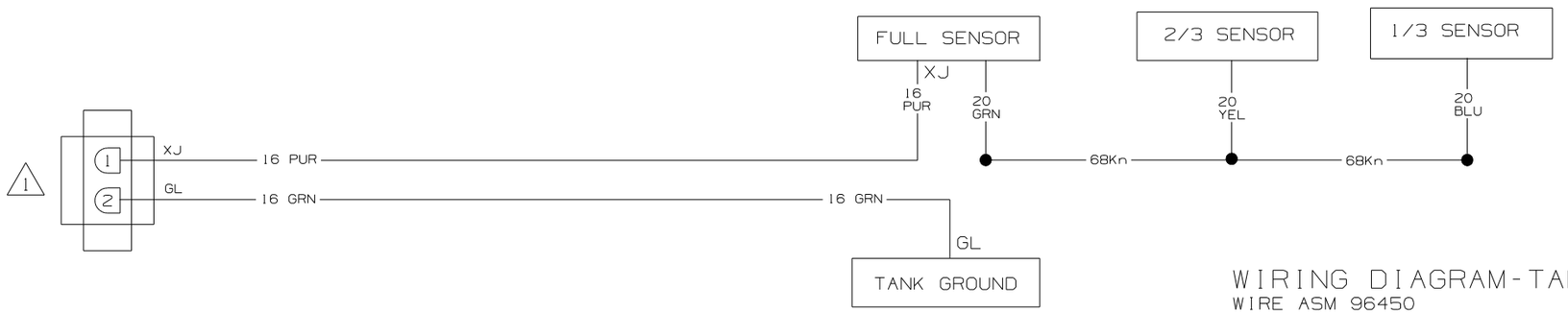

WIRING DIAGRAM-TANK, MAIN HOLDING
WIRE ASM 96450

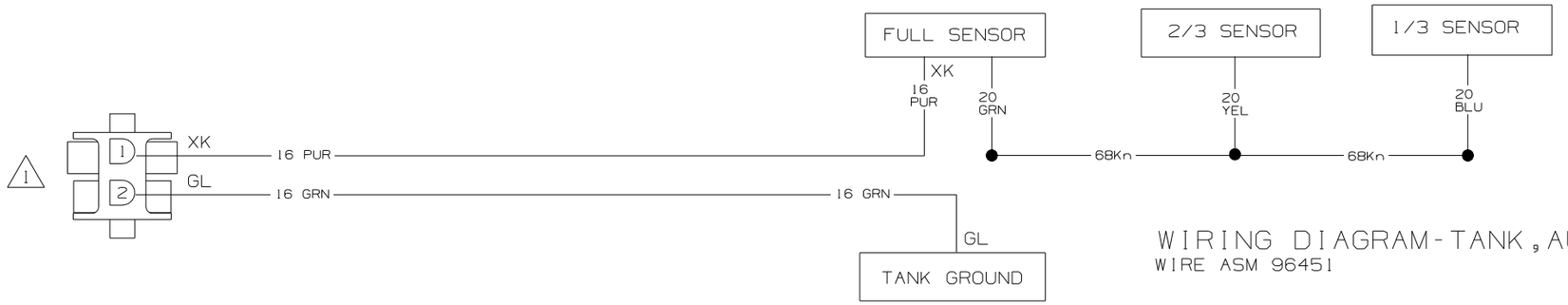

WIRING DIAGRAM-TANK, AUX HOLDING
WIRE ASM 96451

COPYRIGHT 2002
WINNEBAGO
INDUSTRIES, INC.

DFTR	ORIG. DATE
CHKR	ALL DIMENSIONS ARE IN MILLIMETERS
P.E.	
M.E.	FIRST USED
DSNR	03 SERIES

UNSPECIFIED TOLERANCES ARE:
WHOLE DIM (X) :
ONE-PLACE (X.X) :
TWO-PLACE (X.XX) :
ANGLE :
THIRD ANGLE PROJECTION

MATERIAL:

DO NOT SCALE DRAWING

TITLE: WIRING DIAGRAM-HOLDING TANKS

SHEET 1 OF 1 | PART NO 110664

1. SEE WIRING DIAGRAM-BODY FOR ADDITIONAL INFORMATION.

NOTES:

RELEASE	REV A	DATE	DWG NO 110138

REV	ZONE	REVISION RECORD	DATE	DFTR-ORIG

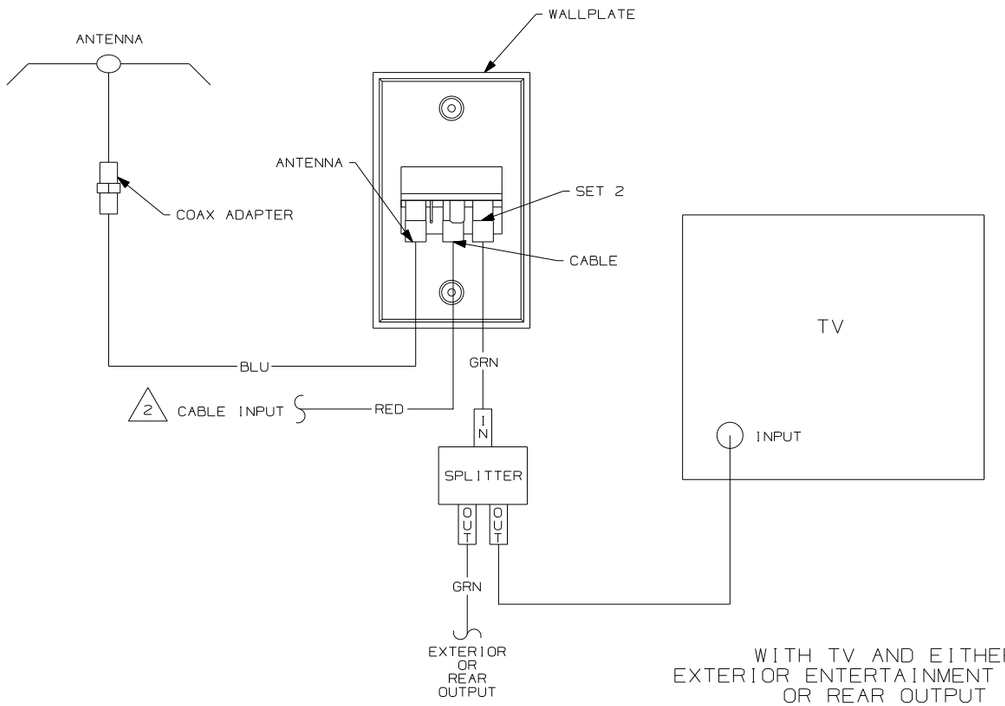

WITH TV AND EITHER
EXTERIOR ENTERTAINMENT CENTER
OR REAR OUTPUT

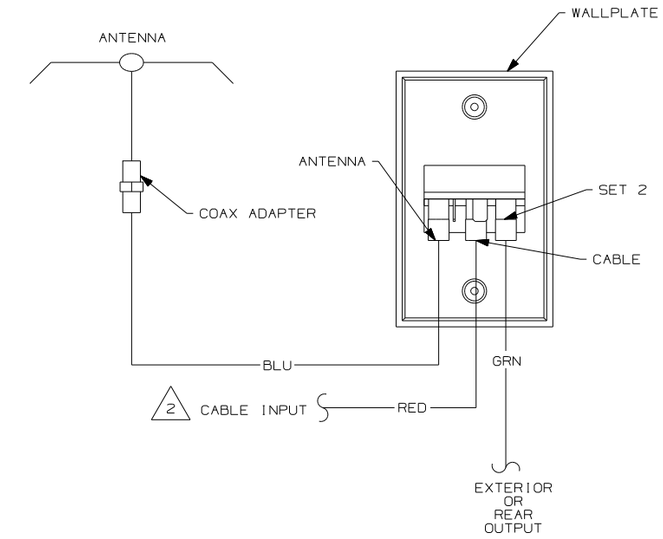

WITH EITHER EXTERIOR ENTERTAINMENT CENTER
OR REAR OUTPUT

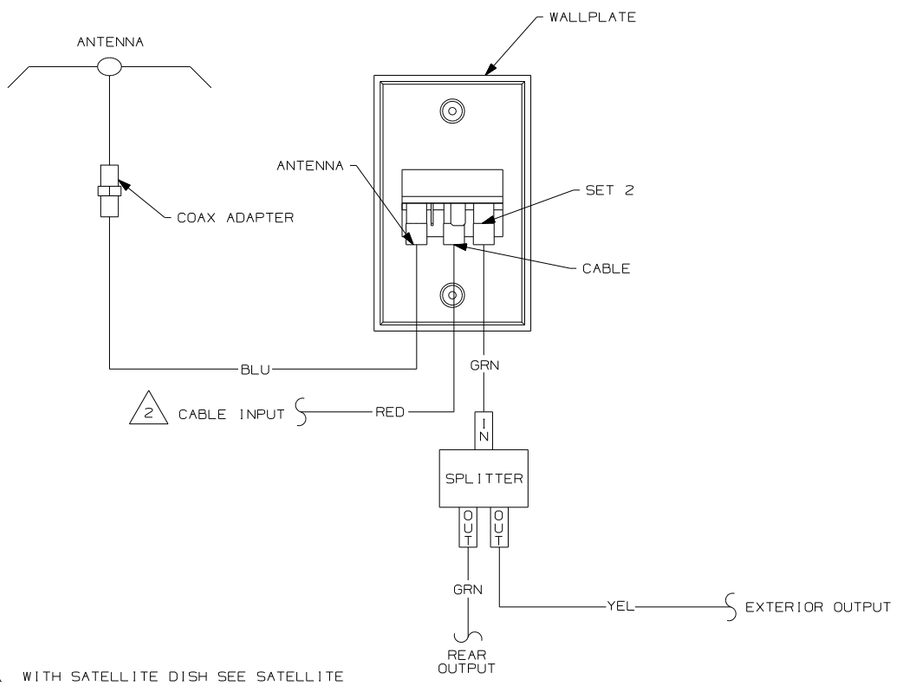

WITH EXTERIOR ENTERTAINMENT CENTER
AND REAR OUTPUT

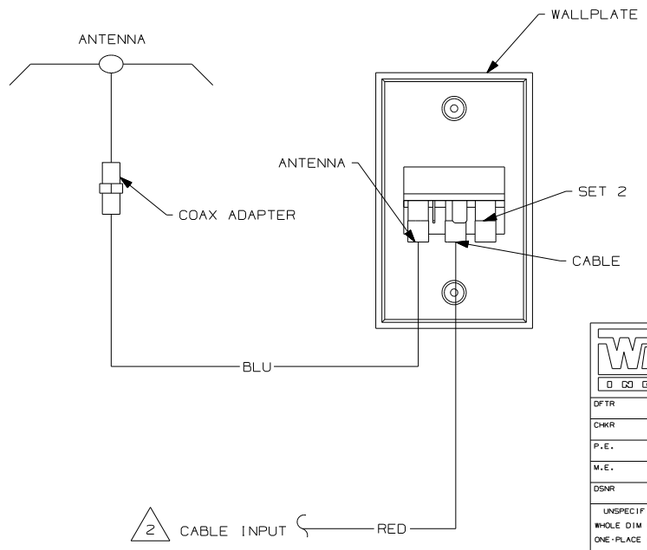

WITHOUT EITHER EXTERIOR ENTERTAINMENT CENTER
OR REAR OUTPUT

NOTES:

2 WITH SATELLITE DISH SEE SATELLITE DISH VIEW SHT 2 BOTTOM LEFT.

1 COLOR INDICATES IDENTIFICATION TAPE.

COPYRIGHT 2002
WINNEBAGO
INDUSTRIES, INC.

DFTR	ORIG. DATE
CHKR	ALL DIMENSIONS ARE IN MILLIMETERS
P.E.	
M.E.	FIRST USED
DSNR	93 MOTORHAMES

UNSPECIFIED TOLERANCES ARE:
WHOLE DIM (X) :
ONE-PLACE (X.X) :
TWO-PLACE (X.XX) :
ANGLE :
THIRD ANGLE PROJECTION

MATERIAL:

DO NOT SCALE DRAWING

TITLE: WIRING DIAGRAM-TV COAX

SHEET 1 OF 2 | PART NO 110138

REF: 1 04/29/03

DWG NO 110138

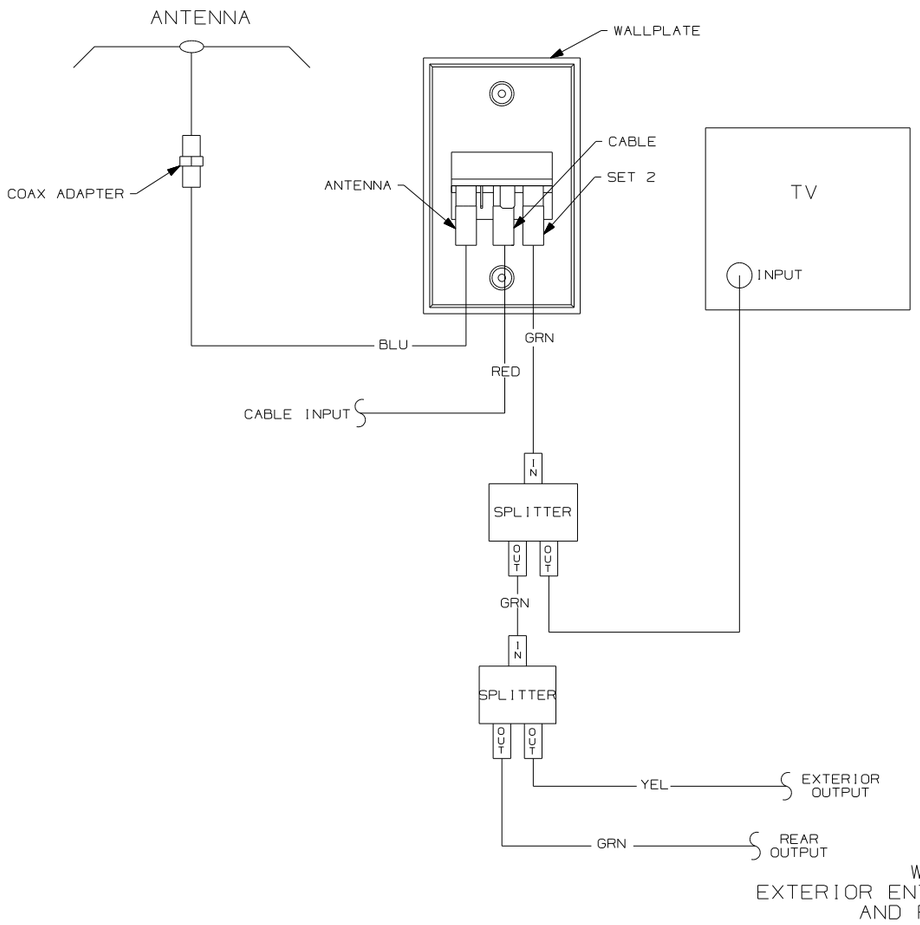

WITH TV,
EXTERIOR ENTERTAINMENT CENTER
AND REAR OUTPUT

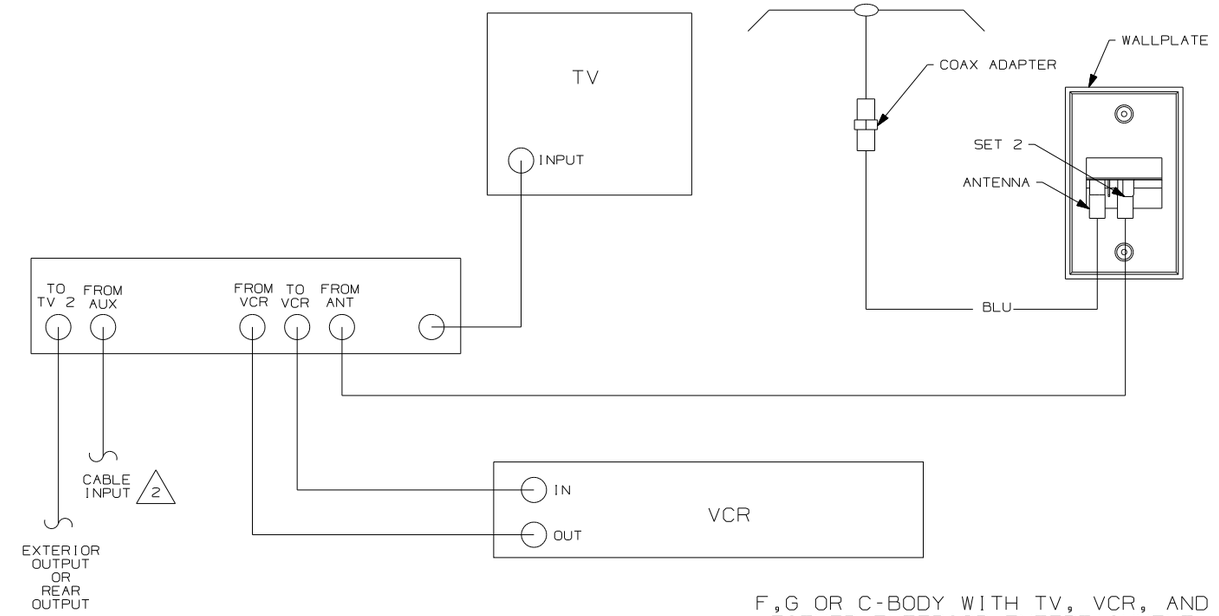

F,G OR C-BODY WITH TV, VCR, AND
EITHER EXTERIOR ENTERTAINMENT
CENTER OR REAR OUTPUT

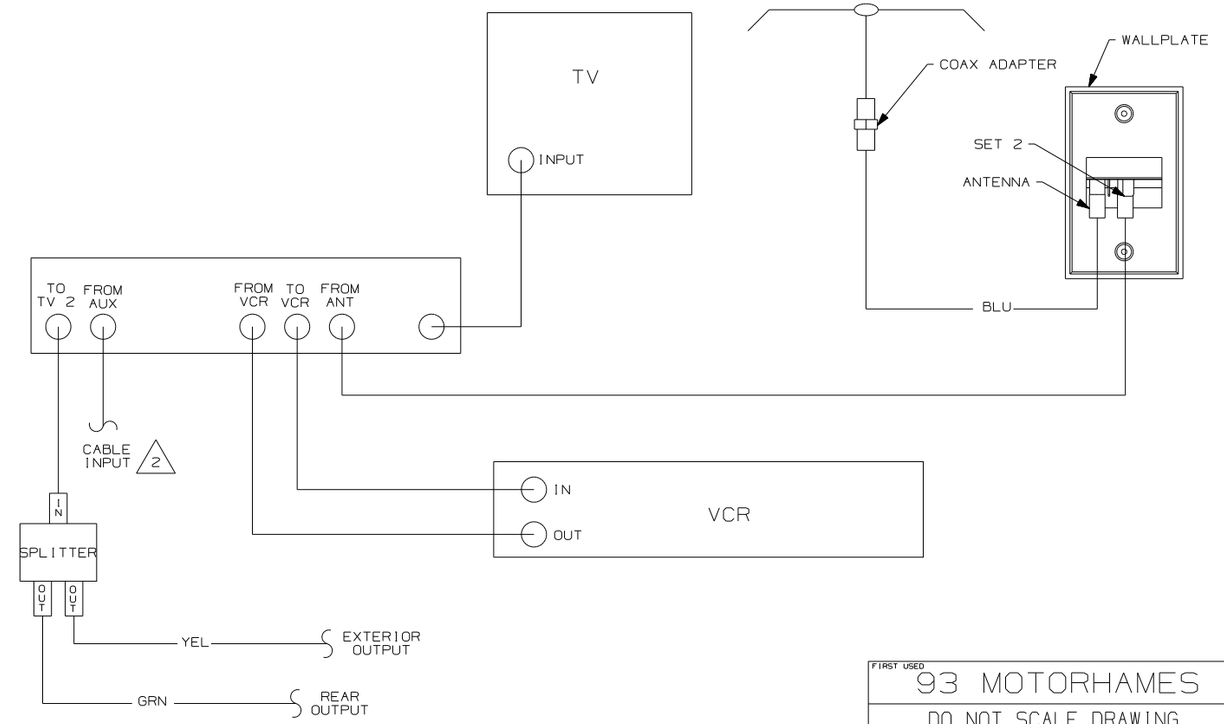

N,M OR P-SERIES WITH TV AND VCR OR
F,G OR C-BODY WITH TV, VCR, EXTERIOR
ENTERTAINMENT CENTER AND REAR OUTPUT

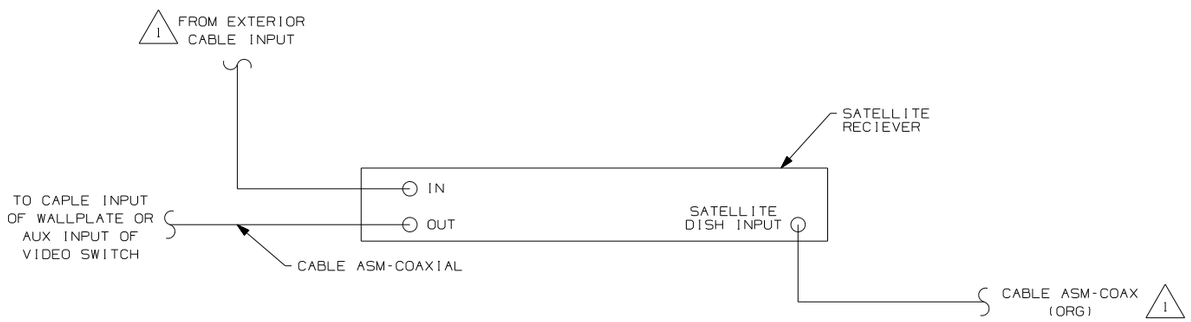

2 WITH SATELLITE DISH SEE SATELLITE DISH VIEW BOTTOM LEFT.

1 CONNECT TV COAX TO JACK ON FRONT OF WALLPLATE.

NOTES:

FIRST USED	93 MOTORHAMES
	DO NOT SCALE DRAWING
TITLE:	WIRING DIAGRAM-TV COAX
SHEET 2	PART NO 110138

DRAWING NO.	SHEET	UNIT
144832-01	1,7,8	D
144832-02	2,8	F
144832-03	3,8	G
144832-04	---	L
144832-05	4,8	P
144832-06	5,8	S
144832-07	6,9	Q

RELEASE	REV A	DATE	DWG NO 144832
REV	ZONE	REVISION RECORD	DATE / DFTR-ORIG

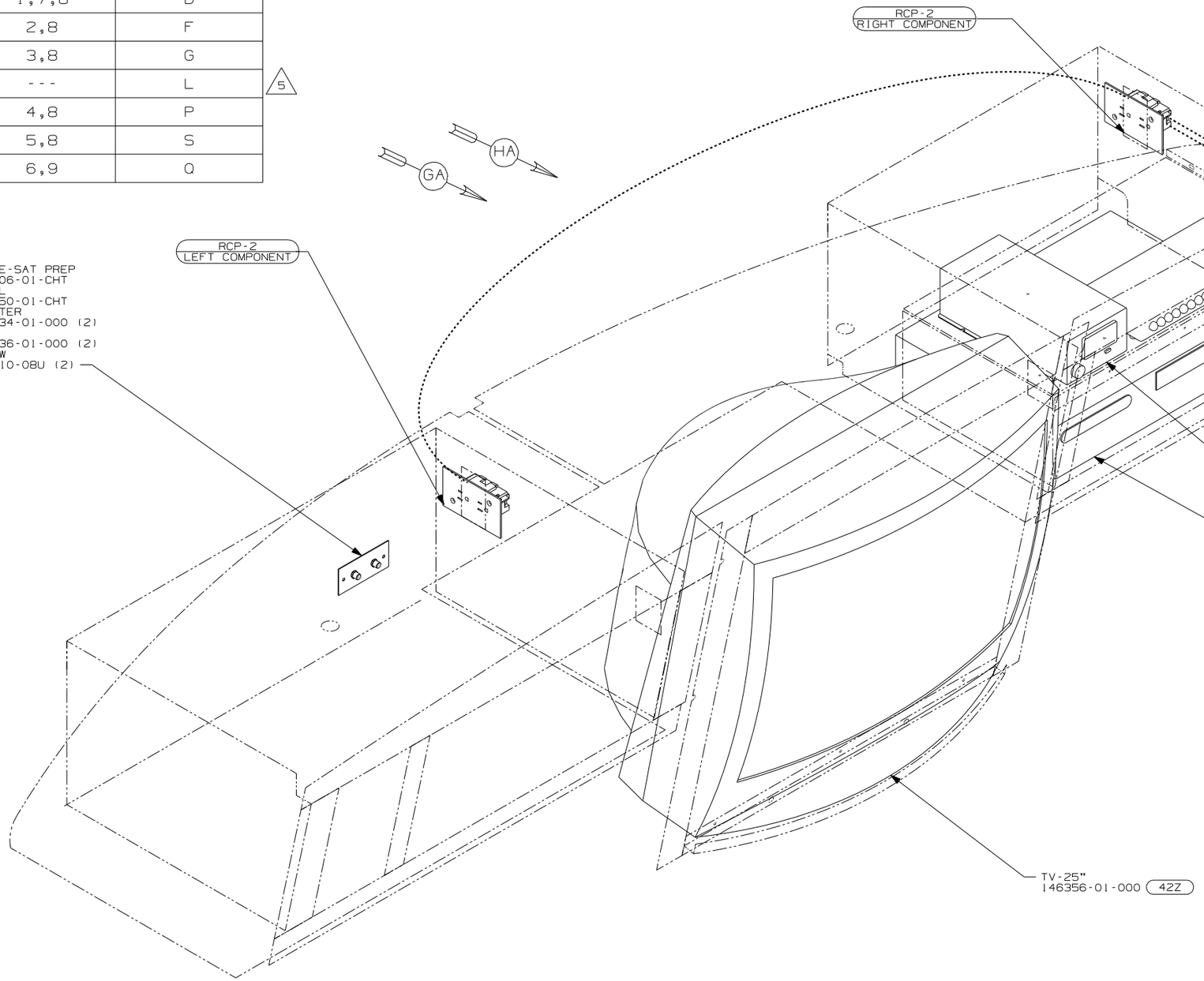

5 FRONT TV OPTION NOT AVAILABLE ON L-SERIES.

4 WHEN THE INVERTER IS USED IN CONJUNCTION WITH VINYL COVERED PANEL REMOVE FABRIC FROM HOLES SUPPLIED IN DIELECTRIC PANEL FOR VENTILATION.

3. WHERE WIRES PASS THROUGH HOLES IN STEEL AND NOT OTHERWISE PROTECTED, USE GROMMET 92908-02-000.

2. ALL WIRES TO BE SECURED WITH CLAMP 10495-01-000 OR CLIP 80734-01-000 EVERY 600MM. USE SCREW G39-10-12B UNLESS OTHERWISE SPECIFIED.

1. 110V WIRES TO BE SECURED WITH CLAMP 10497-05-000 & SCREW G39-10-12B OR TIE-WIRE MOUNT 92909-01-000 & TIE-WIRE 8343-03-000 WITHIN 200MM OF OUTLET BOXES.

NOTES:

(25G) DVD/VCR,STEREO,W/REMOTE
(193) TV ANTENNA-AMPLIFIED SYSTEM
(42Z) TV-25" COLOR STEREO
(40F) INVERTER-DC/AC-130 WATT
(1JC) TV-13" W/VIDEO SELECTION SYS
(265) CODES/STANDARDS-CSA/CMVSS
(1B1) CODES/STANDARDS-USA

04 D-SERIES

FOR ELECTRICAL CALLOUTS SEE DWG NO. 121339-01-000

COPYRIGHT 2004 WINNEBAGO INDUSTRIES, INC.

DFTR	ORIG. DATE
CHKR	ALL DIMENSIONS ARE IN MILLIMETERS
P.E.	
M.E.	FIRST USED
DSNR	04 A-BODIES

UNSPECIFIED TOLERANCES ARE:
WHOLE DIM (X) :
ONE-PLACE (X.X) :
TWO-PLACE (X.XX) :
ANGLE :
THIRD ANGLE PROJECTION

MATERIAL:

DO NOT SCALE DRAWING

TITLE: WIRING INSTL-TV/VCR,FRONT

SHEET 1 OF 9 | PART NO 144832

DWG NO 144832

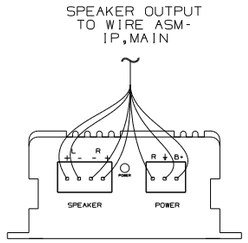

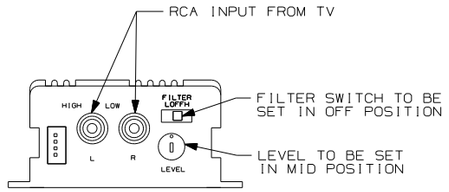

DETAIL BD

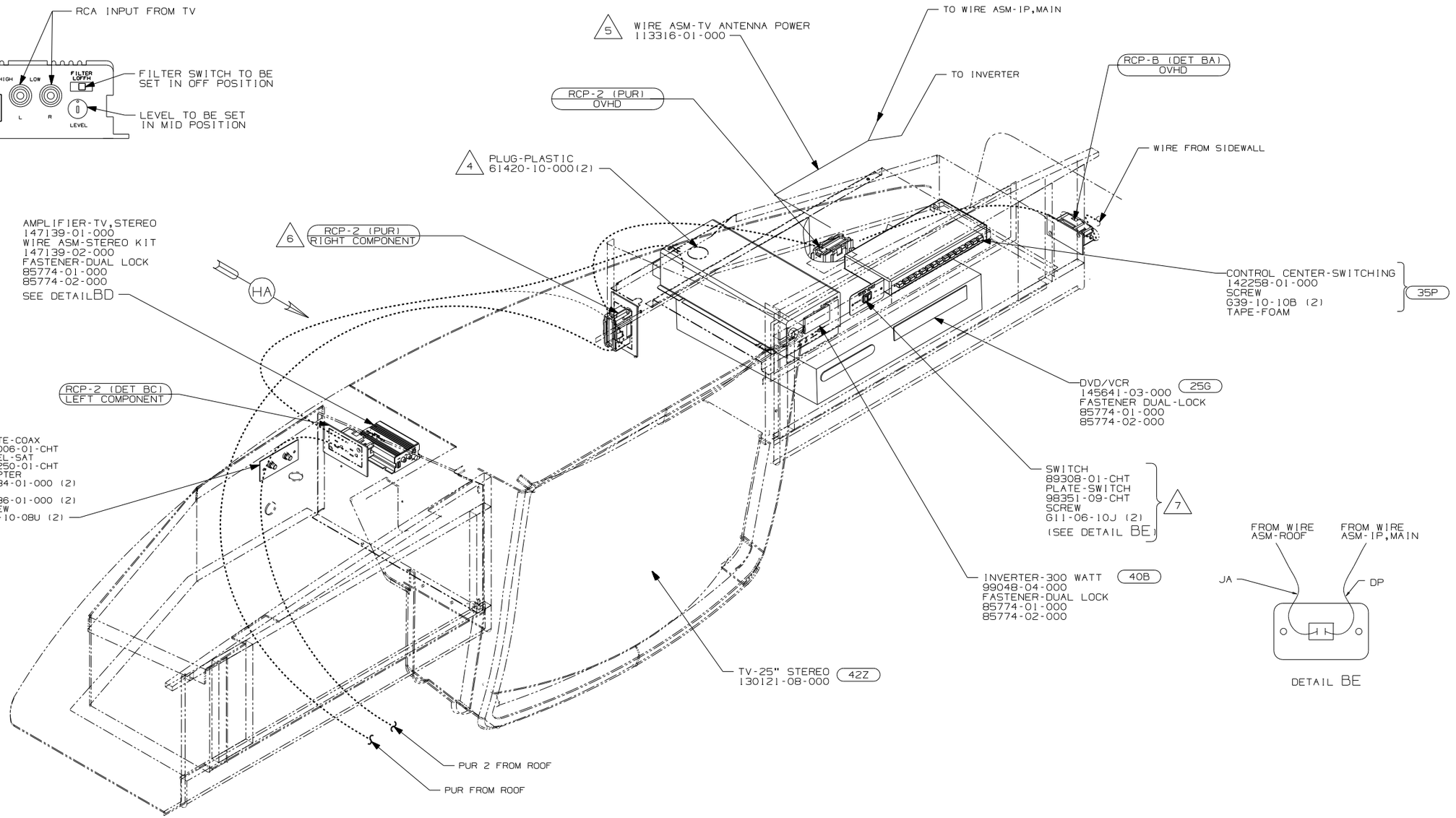

DETAIL BE

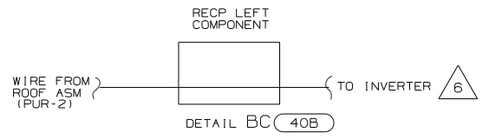

DETAIL BC (40B)

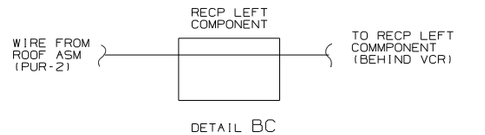

DETAIL BC

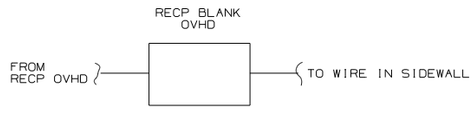

DETAIL BA

7 REMOVE VINYL FROM CUTOUT AT INSTALLATION.

6 CONNECT PURPLE-2 TO INVERTER WITH FEATURE (40B)

5 FOR USE WITH SHELLS ONLY.

4 SLIT AS NEEDED TO RUN WIRES.

3. WHERE WIRES PASS THROUGH HOLES IN STEEL AND NOT OTHERWISE PROTECTED, USE GROMMET 92908-02-000.

2. ALL WIRES TO BE SECURED WITH CLAMP 10495-01-000 OR CLIP 80734-01-000 EVERY 600MM. USE SCREW G39-10-12B UNLESS OTHERWISE SPECIFIED.

1. 110V WIRES TO BE SECURED WITH CLAMP 10497-05-000 & SCREW G39-10-12B OR TIE-WIRE MOUNT 92909-01-000 & TIE-WIRE 8343-03-000 WITHIN 200MM OF OUTLET BOXES.

NOTES:

(42Z) TV-25" COLOR STEREO

(40B) INVERTER-DC/AC, 300 WATT

(35P) VIDEO SELECTION SYSTEM

(25G) DVD/VCR,STEREO,W/REMOTE

04 F-SERIES

FIRST USED 04 A-BODIES

DO NOT SCALE DRAWING

TITLE: WIRING INSTL-TV/VCR,FRONT

SHEET 2 PART NO 144832

(X-X) FOR DETAIL CALLOUTS SEE DWG NO. 130375-01-000

DWG NO 144832

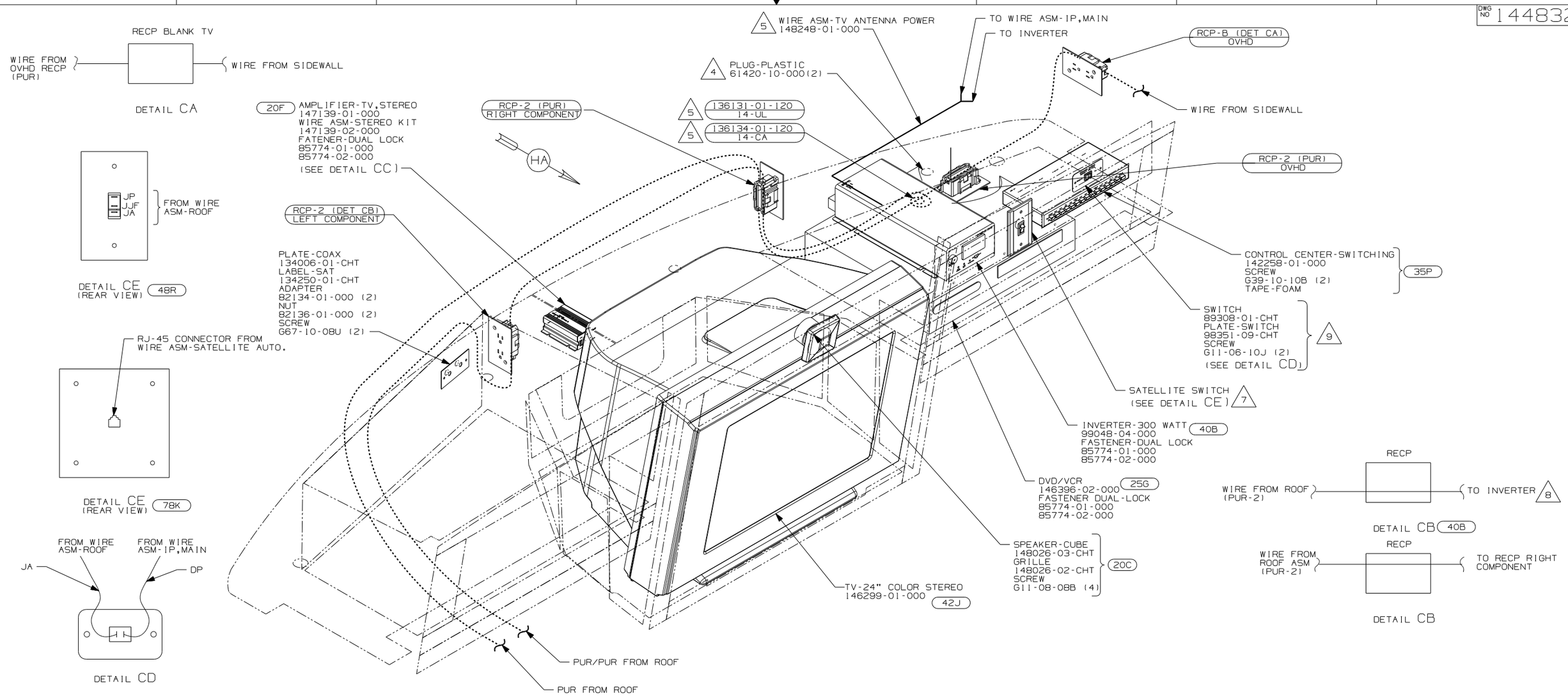

9 REMOVE VINYL FROM CUTOUT AT INSTALLATION.

8 CONNECT PURPLE-2 TO INVERTER WITH FEATURE 40B

7 SWITCH SUPPLIED WITH SATELLITE DISH, SEE WIRING INSTL-BODY,12V FOR ADDITIONAL INFORMATION.

6 NOT USED WITH FEATURE 20C

5 FOR USE WITH SHELLS ONLY.

4 SLIT AS NEEDED TO RUN WIRES.

3. WHERE WIRES PASS THROUGH HOLES IN STEEL AND NOT OTHERWISE PROTECTED, USE GROMMET 92908-02-000.

2. ALL WIRES TO BE SECURED WITH CLAMP 10495-01-000 OR CLIP 80734-01-000 EVERY 600MM. USE SCREW G39-10-12B UNLESS OTHERWISE SPECIFIED.

1. 110V WIRES TO BE SECURED WITH CLAMP 10497-05-000 & SCREW G39-10-12B OR TIE-WIRE MOUNT 92909-01-000 & TIE-WIRE 8343-03-000 WITHIN 200MM OF OUTLET BOXES.

NOTES:

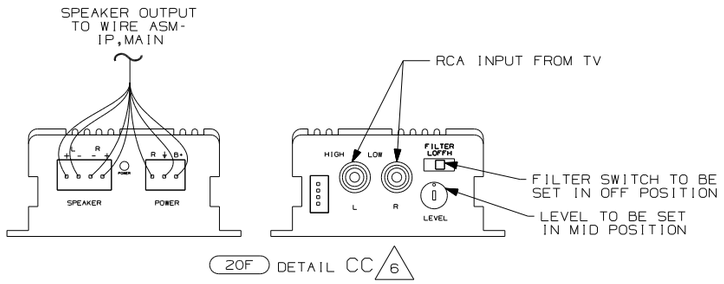

20F DETAIL CC 6

X-X FOR ELECTRICAL CALLOUTS SEE DWG NO. 121339-01-000

78K SATELLITE DISH-AUTOMATIC
48R SAT SYS IN-MOTION W/O RCVR
42J TV-24" COLOR,STEREO W/REMOTE
40B INVERTER-DC/AC, 300 WATT
35P VIDEO SELECTION SYSTEM
25G DVD/VCR,STEREO,W/REMOTE
20F DELUXE SOUND SYSTEM-WITHOUT
20C SOUND SYS. DLX. W/O-SURROUND

04 G-SERIES

FIRST USED 04 A-BODIES

DO NOT SCALE DRAWING

TITLE: WIRING INSTL-TV/VCR,FRONT

SHEET 3 PART NO 144832

DWG NO 144832

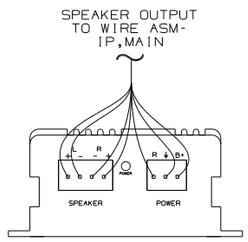

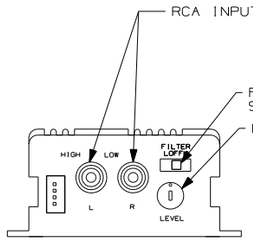

20F DETAIL DA △5

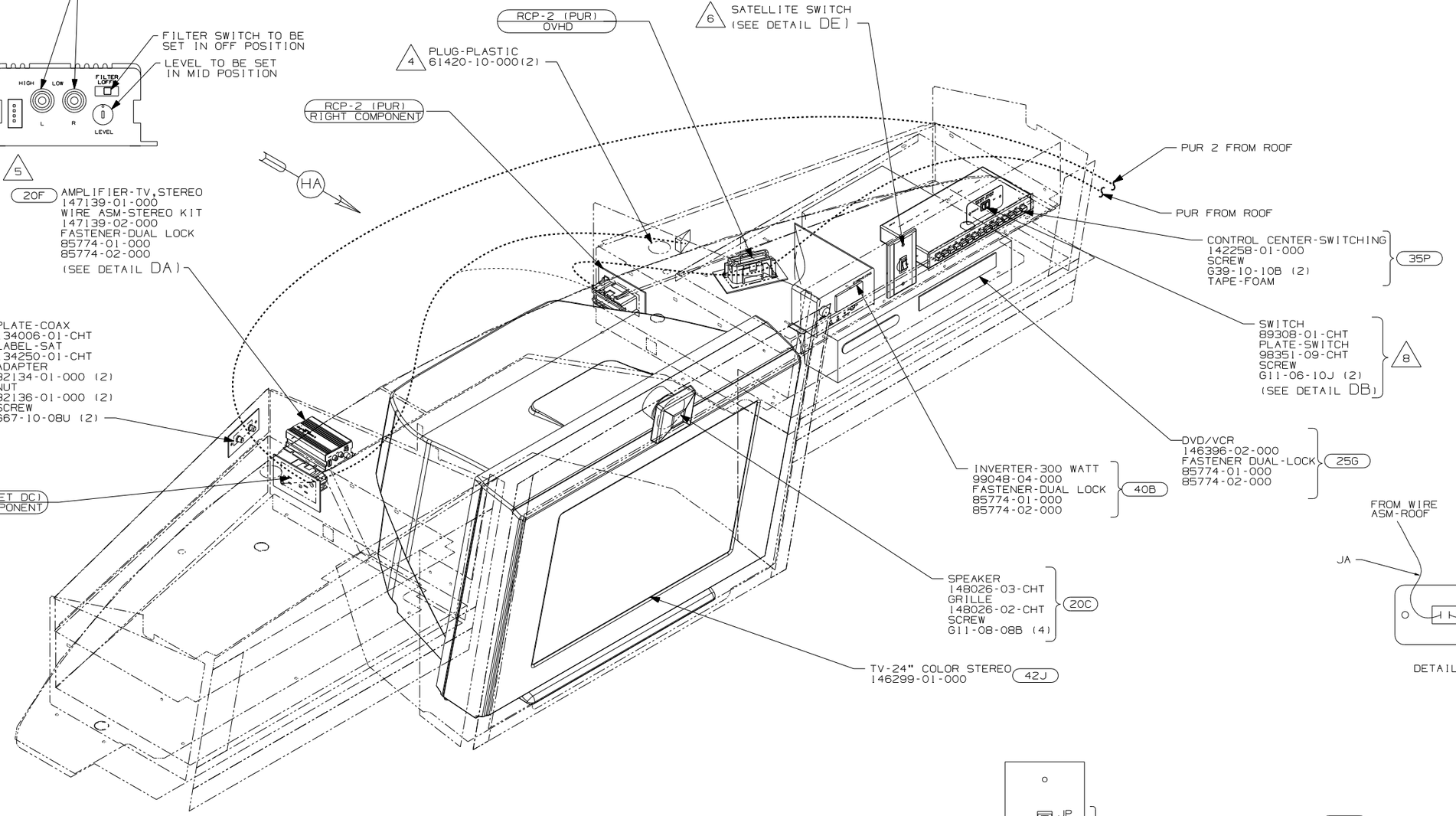

20F AMPLIFIER-TV,STEREO
147139-01-000
WIRE ASM-STEREO KIT
147139-02-000
FASTENER-DUAL LOCK
85774-01-000
85774-02-000
(SEE DETAIL DA)

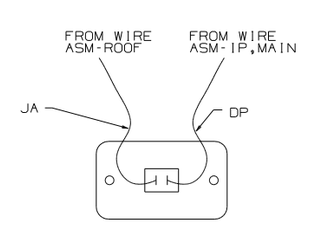

DETAIL DB

△8 REMOVE VINYL FROM CUTOUT AT INSTALLATION.

△7 CONNECT PURPLE-2 TO INVERTER WITH FEATURE (40B)

△6 SWITCH SUPPLIED WITH SATELLITE DISH, SEE WIRING INSTL-BODY,12V FOR ADDITIONAL INFORMATION.

△5 NOT USED WITH FEATURE (20C)

△4 SLIT AS NEEDED TO RUN WIRES.

3. WHERE WIRES PASS THROUGH HOLES IN STEEL AND NOT OTHERWISE PROTECTED, USE GROMMET 92908-02-000.

2. ALL WIRES TO BE SECURED WITH CLAMP 10495-01-000 OR CLIP 80734-01-000 EVERY 600MM. USE SCREW G39-10-12B UNLESS OTHERWISE SPECIFIED.

1. 110V WIRES TO BE SECURED WITH CLAMP 10497-05-000 & SCREW G39-10-12B OR TIE-WIRE MOUNT 92909-01-000 & TIE-WIRE 8343-03-000 WITHIN 200MM OF OUTLET BOXES.

NOTES:

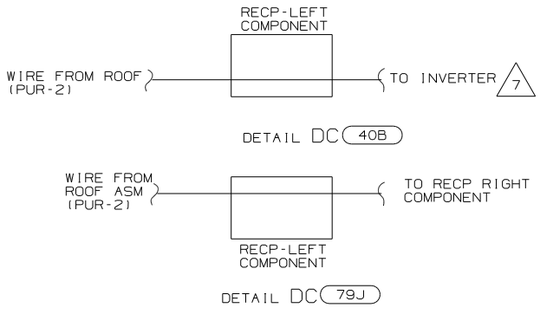

DETAIL DC (40B)

DETAIL DC (79J)

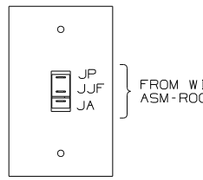

DETAIL DE
(REAR VIEW) (48R)

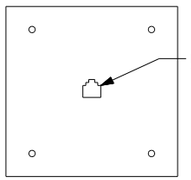

DETAIL DE
(REAR VIEW) (78K)

(79J) INVERTER/CHARGER-1,500 WATT
(78K) SATELLITE DISH-AUTOMATIC
(48R) SAT SYS IN-MOTION W/O RCVR
(42J) TV-24" COLOR,STEREO W/REMOTE
(40B) INVERTER-DC/AC, 300 WATT
(35P) VIDEO SELECTION SYSTEM
(25G) DVD/VCR,STEREO,W/REMOTE
(20F) DELUXE SOUND SYSTEM-WITHOUT
(20C) SOUND SYS. DLX. W/O-SURROUND

04 P-SERIES

FIRST USED	04 A-BODIES
	DO NOT SCALE DRAWING
TITLE:	WIRING INSTL-TV/VCR,FRONT
SHEET 4	PART NO 144832

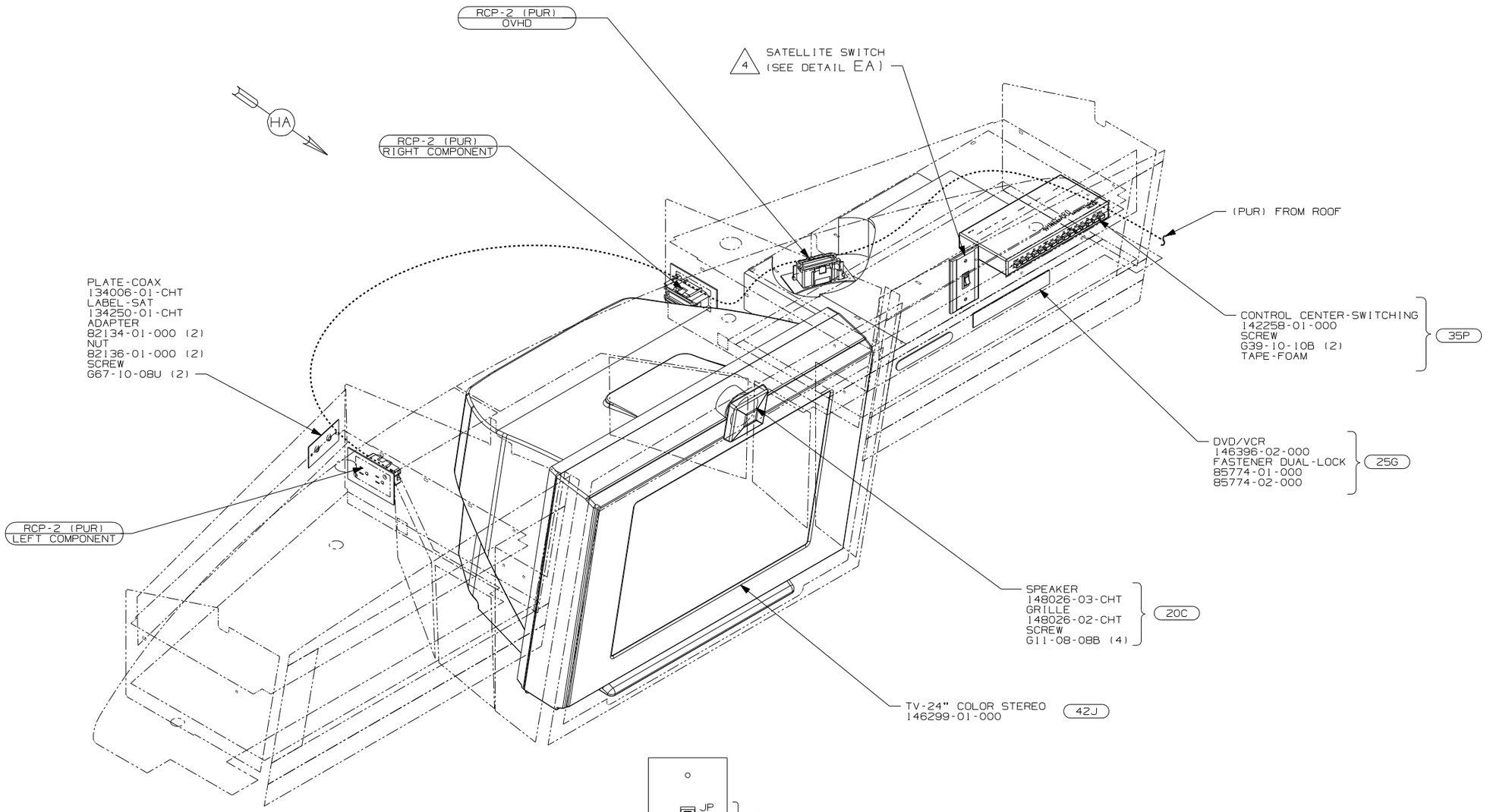

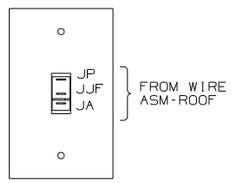

DETAIL EA
(REAR VIEW) 48R

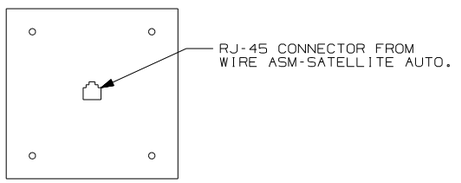

DETAIL EA
(REAR VIEW) 78K

78K SATELLITE DISH-AUTOMATIC
48R SAT SYS IN-MOTION W/O RCVR
42J TV-24" COLOR,STEREO W/REMOTE
35P VIDEO SELECTION SYSTEM
25G DVD/VCR,STEREO,W/REMOTE
20C SOUND SYS. DLX. W/O-SURROUND

NOTES:

1. 110V WIRES TO BE SECURED WITH CLAMP 10497-05-000 & SCREW G39-10-12B OR TIE-WIRE MOUNT 92909-01-000 & TIE-WIRE 8343-03-000 WITHIN 200MM OF OUTLET BOXES.

2. ALL WIRES TO BE SECURED WITH CLAMP 10495-01-000 OR CLIP 80734-01-000 EVERY 600MM. USE SCREW G39-10-12B UNLESS OTHERWISE SPECIFIED.

3. WHERE WIRES PASS THROUGH HOLES IN STEEL AND NOT OTHERWISE PROTECTED, USE GROMMET 92908-02-000.

4 SWITCH SUPPLIED WITH SATELLITE DISH, SEE WIRING INSTL-BODY,12V FOR ADDITIONAL INFORMATION.

04 S-SERIES

FIRST USED 04 A-BODIES

DO NOT SCALE DRAWING

TITLE: WIRING INSTL-TV/VCR,FRONT

SHEET 5 PART NO 144832

DWG NO 144832

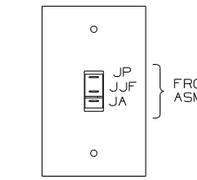

DETAIL FB (REAR VIEW) (48R)

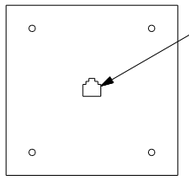

DETAIL FB (REAR VIEW) (78K)

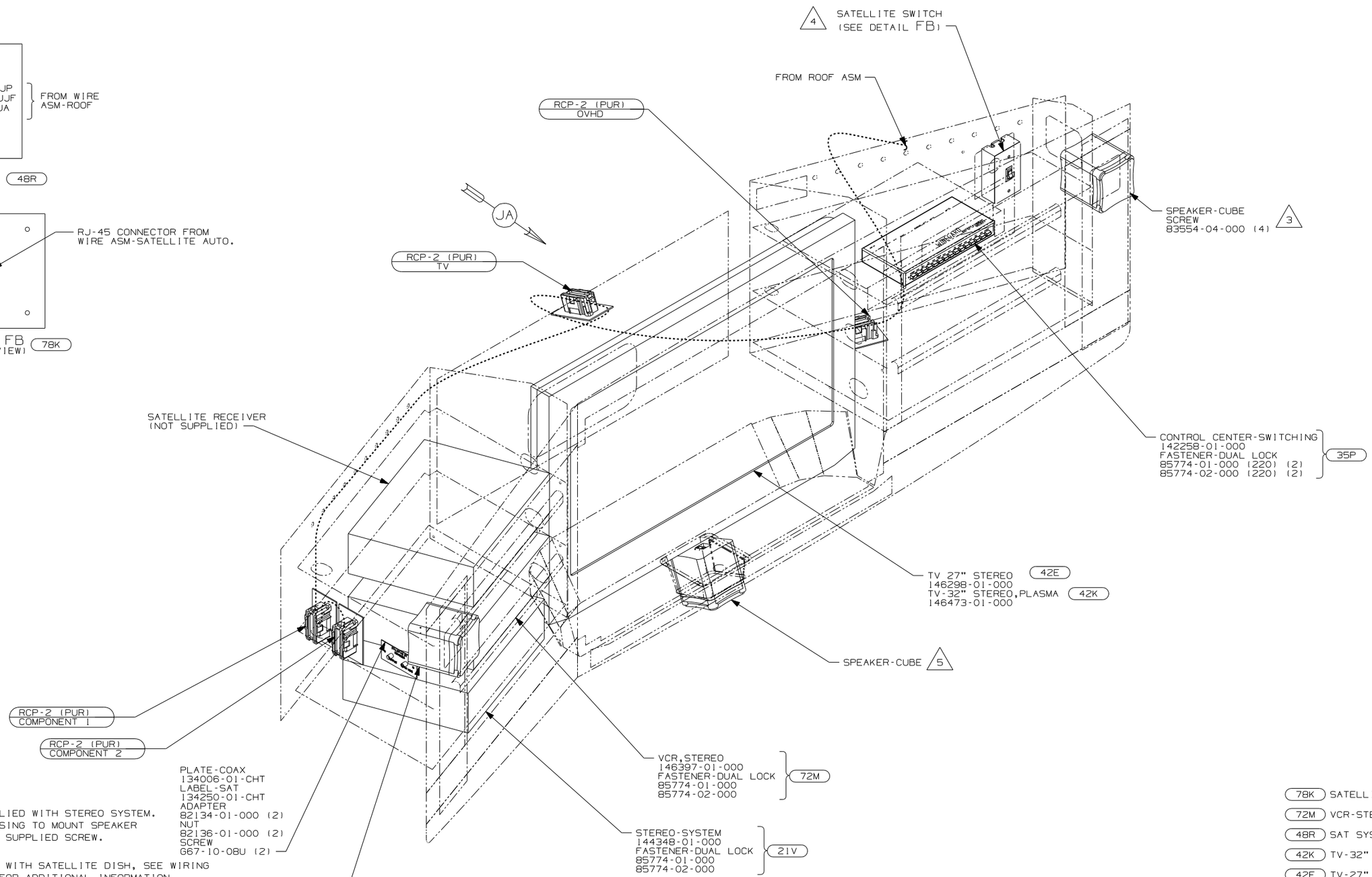

5 SPEAKER IS SUPPLIED WITH STEREO SYSTEM. REMOVE REAR HOUSING TO MOUNT SPEAKER IN CABINET WITH SUPPLIED SCREW.

4 SWITCH SUPPLIED WITH SATELLITE DISH, SEE WIRING INSTL-BODY,12V FOR ADDITIONAL INFORMATION.

3 SPEAKER IS SUPPLIED WITH STEREO SYSTEM. REMOVE REAR HOUSING TO MOUNT SPEAKER IN CABINET WITH SCREWS CALLED OUT.

3 SPEAKER-CUBE SCREW 83554-04-000 (4)

2. ALL WIRES TO BE SECURED WITH CLAMP 10495-01-000 OR CLIP 80734-01-000 EVERY 600MM. USE SCREW G39-10-12B UNLESS OTHERWISE SPECIFIED.

1. 110V WIRES TO BE SECURED WITH CLAMP 10497-05-000 & SCREW G39-10-12B OR TIE-WIRE MOUNT 92909-01-000 & TIE-WIRE 8343-03-000 WITHIN 200MM OF OUTLET BOXES.

NOTES:

(78K) SATELLITE DISH-AUTOMATIC
(72M) VCR-STEREO
(48R) SAT SYS IN-MOTION W/O RCVR
(42K) TV-32" COLOR,STEREO W/REMOTE
(42E) TV-27" COLOR,STEREO W/REMOTE
(35P) VIDEO SELECTION SYSTEM
(21V) SOUND SYSTEM DELUXE

04 Q-SERIES ADVANTAGE

FIRST USED 04 A-BODIES	
DO NOT SCALE DRAWING	
TITLE: WIRING INSTL-TV/VCR,FRONT	
SHEET 6	PART NO 144832

DWG NO 144832

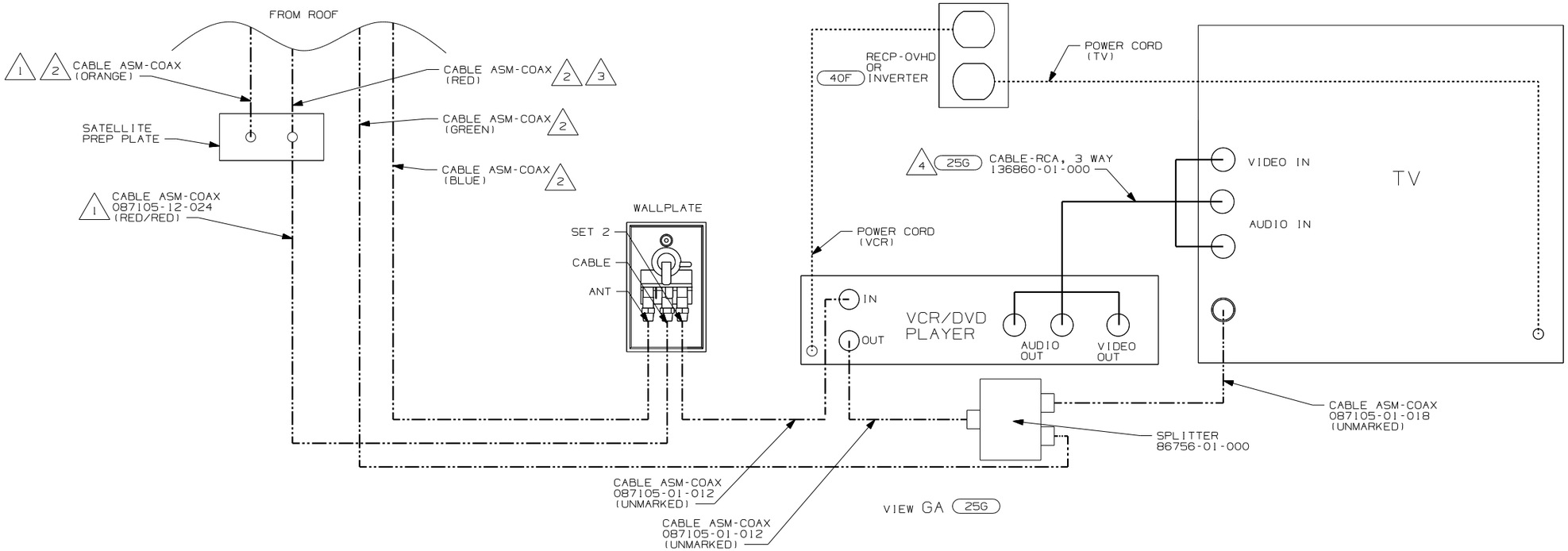

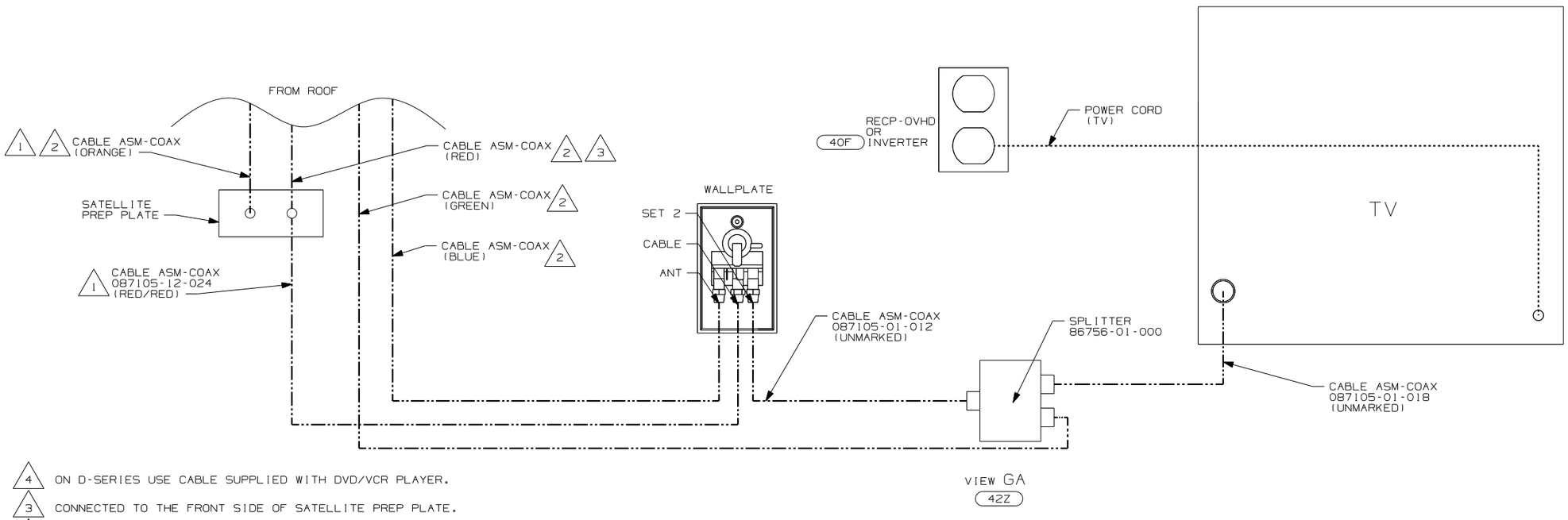

4 ON D-SERIES USE CABLE SUPPLIED WITH DVD/VCR PLAYER.

3 CONNECTED TO THE FRONT SIDE OF SATELLITE PREP PLATE.

2 CABLE ROUTED IN ROOF.

1 CONNECTED TO THE REAR SIDE OF SATELLITE PREP PLATE.

NOTES:

42Z TV-25" COLOR STEREO

40F INVERTER-DC/AC-130 WATT

25G DVD/VCR,STEREO,W/REMOTE

1JC TV-13" W/VIDEO SELECTION SYS

WITHOUT 1JC

FIRST USED	04 A-BODIES
DO NOT SCALE DRAWING	
TITLE: WIRING INSTL-TV/VCR,FRONT	
SHEET 7	PART NO 144832

DWG NO 144832

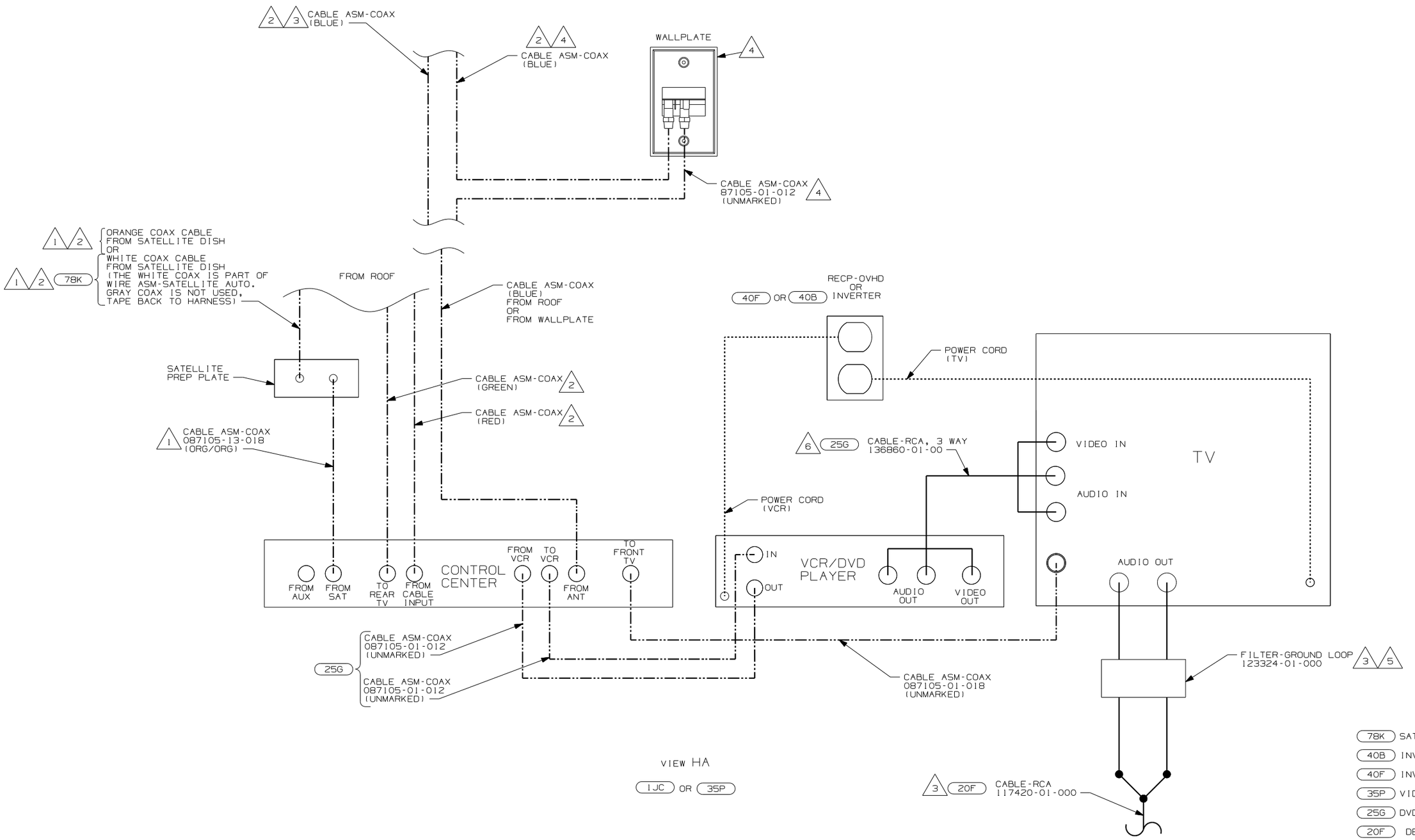

78K SATELLITE DISH-AUTOMATIC
40B INVERTER-DC/AC, 300 WATT
40F INVERTER-DC/AC-130 WATT
35P VIDEO SELECTION SYSTEM
25G DVD/VCR,STEREO,W/REMOTE
20F DELUXE SOUND SYSTEM-WITHOUT
20C SOUND SYS. DLX. W/Q-SURROUND
1JC TV-13" W/VIDEO SELECTION SYS

6 ON D-SERIES USE CABLE SUPPLIED WITH DVD/VCR PLAYER.
5 USED ON F-SERIES ONLY. SUPPLIED WITH TV ON G,P,S.
4 D-SERIES ONLY
3 NOT USED ON THE D-SERIES.
2 CABLE ROUTED IN ROOF.
1 CONNECTED TO THE REAR SIDE OF SATELLITE PREP PLATE.

FIRST USED	04 A-BODIES
	DO NOT SCALE DRAWING
TITLE:	WIRING INSTL-TV/VCR,FRONT
SHEET 8	PART NO 144832

DWG NO 144832

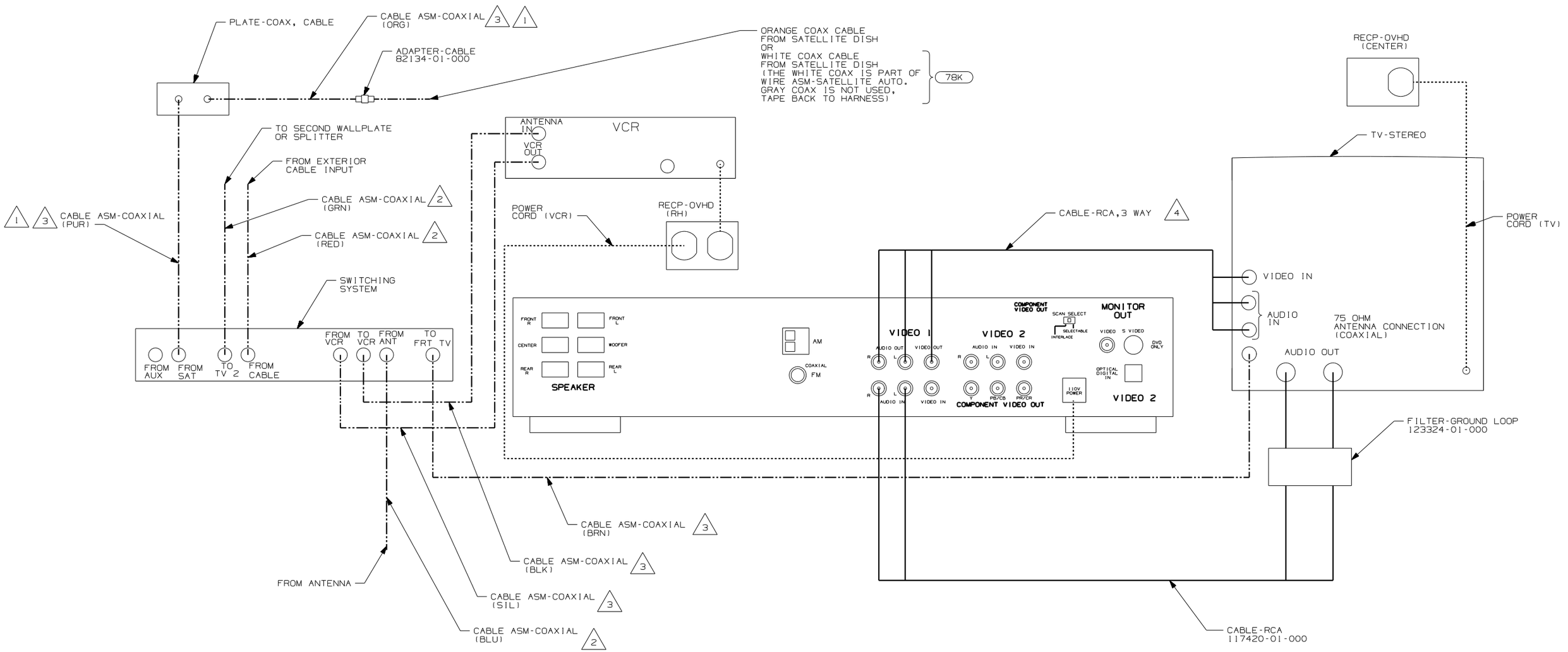

VIEW JA

78K SATELLITE DISH-AUTOMATIC

4 SUPPLIED WITH DVD PLAYER

3 CABLE IS PART OF WIRE ASM-COAX,FRONT ENT CTR 136766-01-00

2 CABLE ROUTED IN ROOF.

1 CONNECTED TO THE REAR SIDE OF SATELLITE PREP PLATE.

FIRST USED	04 A-BODIES
DO NOT SCALE DRAWING	
TITLE: WIRING INSTL-TV/VCR,FRONT	
SHEET 9	PART NO 144832

RELEASE	REV	DATE	DWG NO
	A		121339

REV	ZONE	REVISION RECORD	DATE	DFTR-ORIG

CG --- SCREW G13-07-12U WAS G13-08-10U ON LSH-3 05/17/07 3677-2245

TERMINALS

NO.	PART NUMBER	DESCRIPTION
B-1	50003-01	TERMINAL-PIN, 16-14 GA,.156 DIA
B-2	50004-01	TERMINAL-RECP, 16-14 GA,.156 DIA
B-11	50003-02	TERMINAL-PIN, 16-14 GA,.180 DIA
B-12	50004-02	TERMINAL-RECP, 16-14 GA,.180 DIA
WP-1	106950-01	TERMINAL-PIN, 16-14 GA
WP-2	106950-02	TERMINAL-PIN, 10-12 GA
WP-3	106950-03	TERMINAL-PIN, 8 GA
R-1	35416-01	TERMINAL-RING, #10 STD, 8 GA
R-2	35416-02	TERMINAL-RING, #10 STD, 6 GA
R-3	35416-03	TERMINAL-RING, #10 STD, 10-12 GA
R-4	35416-04	TERMINAL-RING, #10 STD, 14-16 GA
R-5	37018-01	TERMINAL-RING, 5/16 STD, 12-10 GA
R-6	102777-01	TERMINAL-RING, #6 STD, 14-16 GA
R-7	102777-02	TERMINAL-RING, #6 STD, 10-12 GA
R-8	102777-03	TERMINAL-RING, #6 STD, 8 GA
R-9	33787-01	TERMINAL-RING, #10 STD, 14 GA
R-60	8325-01	TERMINAL-RING, 1/4 STD, 14-16 GA
R-61	8326-01	TERMINAL-RING, 3/8 STD, 14-16 GA
R-62	8327-01	TERMINAL-RING, #10 STD, 14-16 GA
R-63	8328-01	TERMINAL-RING, #10 STD, 10-12 GA
R-64	8328-02	TERMINAL-RING, 3/8 STD, 10-12 GA
R-65	8329-01	TERMINAL-RING, 3/8 STD, 8 GA
R-66	8331-01	TERMINAL-RING, 3/8 STD, 4 GA
R-67	8332-01	TERMINAL-RING, 1/4 STD, 6 GA
R-68	8332-02	TERMINAL-RING, 1/4 STD, 10 GA
R-69	8350-01	TERMINAL-RING, 3/8 STD, 6 GA
R-70	99275-02	TERMINAL-RING, 7/16 STD, 8 GA
R-71	101397-01	TERMINAL-RING, #10 STD, 14-16 GA
R-91	88791-01	TERMINAL-RING, 3/8, 90°, 1/0 GA
R-92	88791-02	TERMINAL-RING, 3/8, 90°, 2 GA
R-93	8348-01	TERMINAL-RING, 3/8 STD, 2 GA
R-94	99275-01	TERMINAL-RING, 7/16 STD, 1/0 GA
RF-51	7944-01	TERMINAL-SPADE, 12-10 GA, #8 STUD
RF-52	7945-01	TERMINAL-SPADE, 18-14 GA, #8 STUD
TR-1	47443-01	TERMINAL-RECP, 16-14 GA,.25, INS
TR-2	47443-02	TERMINAL-RECP, 12-10 GA,.25, INS
TR-3	47443-05	TERMINAL-RECP, 22-18 GA,.25, INS
TR-11	47443-03	TERMINAL-RECP, 16-14 GA,.19, INS
TR-12	47443-04	TERMINAL-RECP, 16-14 GA,.11, INS
TR-21	80015-01	TERMINAL-RECP, 22-18 GA,.250, 90 DEG FOR USE WITH TAB THICKNESS .032
TR-22	80015-02	TERMINAL-RECP, 16-14 GA,.187, 90 DEG FOR USE WITH TAB THICKNESS .032
TR-23	80015-03	TERMINAL-RECP, 16-14 GA,.250, 90 DEG FOR USE WITH TAB THICKNESS .032
TR-24	80015-04	TERMINAL-RECP, 16-14 GA,.187, 90 DEG FOR USE WITH TAB THICKNESS .020
TR-51	7940-01	TERMINAL-RECP, 16-12 GA,.25, UNINS
TR-52	23809-01	TERMINAL-RECP, 16-14 GA,.19, UNINS
TR-53	23809-02	TERMINAL-RECP, 18-20 GA,.25, UNINS
TR-54	49270-01	TERMINAL-RECP, 18-20 GA,.19, UNINS
TR-55	7940-02	TERMINAL-RECP, 10 GA, .25, UNINS
TT-1	85745-02	TERMINAL-TAB, 16-14 GA,.25, INS
TT-2	85745-03	TERMINAL-TAB, 10-12 GA,.25, INS
TT-11	85745-04	TERMINAL-TAB, 18-22 GA,.19, INS
TT-51	7942-01	TERMINAL-TAB, 16-14 GA,.25, UNINS
TT-52	7943-01	TERMINAL-TAB, 14-10 GA,.25, UNINS
MF6-1	129236-01	TERMINAL-FEM, M/P, 630, 10-12
MF6-2	129236-02	TERMINAL-FEM, M/P, 630, 14-16

SPLICES

NO.	PART NUMBER	DESCRIPTION
BS-1	31876-01	SPLICE-BUTT, 16-14 GA, BLUE
BS-2	31876-02	SPLICE-BUTT, 12-10 GA, YELLOW
BS-3	31876-03	SPLICE-BUTT, 22-18 GA, RED
BS-SB	100070-01	SPLICE-BUTT, 14-16 GA, SHRINK,BLUE
BS-RB	112823-01	SPLICE-BUTT, 14-22 GA, REDUCER
S-1	7946-01	SPLICE, 1-6 MM²
S-2	23808-01	SPLICE, 6-9 MM²
I-2	7956-02	SHRINK WRAP .375 DIA
I-5	7956-05	SHRINK WRAP .25 DIA
SH-1	58028-01	SPLICE-HAT
S-10	101173-01	SPLICE-BARREL, 26300 CMA

NO.	PART NUMBER	DESCRIPTION
SP-1	90986-02	PLUG ASM-ELECTRIC STEP
SP-2	142524-01-000	HOUSING-4 PIN
	098261-01-000	SOCKET-CONNECTOR
	098262-07-000	SEAL-CONNECTOR
	098261-02-000 (3)	SOCKET-CONNECTOR
	098262-01-000 (3)	SEAL-CONNECTOR
HR-1	63910-01	HOUSING-RELAY
MP-8	125323-02	HOUSING-PIN, 8 CAVITY
MP-10	125323-01	HOUSING-PIN, 10 CAVITY
MPP	125324-01	TERMINAL-MALE, M/P, 150
CAV-1	125325-01	SEAL-CAVITY, 150-SERIES M/P
CON-3	98262-03	SEAL-CONNECTOR
LS-8	125323-03	LOCK-SECONDARY 8 POSITION
LS-10	125323-04	LOCK-SECONDARY 10 POSITION
H-8	108355-01	HOUSING-SWITCH, 8 POSITION
H-12	108355-02	HOUSING-SWITCH, 12 POSITION

NO.	PART NUMBER	DESCRIPTION
GEN-1	125323-02-000	HOUSING-8 POSN, MALE ,150 SERIES
	125324-01-000 (4)	TERMINAL-MALE, M/P, 150
	098262-03-000 (4)	SEAL-CONNECTOR
	125325-01-000 (4)	SEAL-CAVITY, 150 SERIES M/P
	125323-03-000	LOCK-SECONDARY 8 POSITION
GEN-2	125323-01-000	HOUSING-10 POSN, MALE ,150 SERIES
	125324-01-000 (5)	TERMINAL-MALE, M/P, 150
	098262-03-000 (5)	SEAL-CONNECTOR
	125325-01-000 (5)	SEAL-CAVITY, 150 SERIES M/P
	125323-04-000	LOCK-SECONDARY 10 POSITION

HOUSINGS AND TERMINALS

NO.	PART NUMBER	DESCRIPTION
HS-2	88474-10	HOUSING-SOCKET, 2 CAVITY
HS-3	88474-09	HOUSING-SOCKET, 3 CAVITY
HS-4	88474-08	HOUSING-SOCKET, 4 CAVITY
HS-5	88474-07	HOUSING-SOCKET, 5 CAVITY
HS-6	88474-06	HOUSING-SOCKET, 6 CAVITY
HS-7	88474-05	HOUSING-SOCKET, 6 CAVITY-IN LINE
HS-9	88474-03	HOUSING-SOCKET, 9 CAVITY
HS-12	88474-01	HOUSING-SOCKET, 12 CAVITY
HS-15	88474-02	HOUSING-SOCKET, 15 CAVITY
HS-2-R	88474-12	HOUSING-SOCKET, 2 CAVITY-RED
HP-2	88473-10	HOUSING-PIN, 2 CAVITY
HP-3	88473-09	HOUSING-PIN, 3 CAVITY
HP-4	88473-08	HOUSING-PIN, 4 CAVITY
HP-5	88473-07	HOUSING-PIN, 5 CAVITY
HP-6	88473-06	HOUSING-PIN, 6 CAVITY
HP-7	88473-05	HOUSING-PIN, 6 CAVITY-IN LINE
HP-8	88473-04	HOUSING-PIN, 8 CAVITY-IN LINE
HP-9	88473-03	HOUSING-PIN, 9 CAVITY
HP-12	88473-01	HOUSING-PIN, 12 CAVITY
HP-15	88473-02	HOUSING-PIN, 15 CAVITY
HP-2-R	88473-15	HOUSING-PIN, 2 CAVITY-RED
HP-3-B	88473-12	HOUSING-PIN, 3 CAVITY-BLUE
HP-3-G	88473-13	HOUSING-PIN, 3 CAVITY-GREEN
HP-3-R	88473-14	HOUSING-PIN, 3 CAVITY-RED
TS-1	88476-01	SOCKET-CONNECTOR, 20-14 GA
TS-2	88476-02	SOCKET-CONNECTOR, 12-10 GA
TP-1	88475-01	PIN-CONNECTOR, 20-14 GA
TP-2	88475-02	PIN-CONNECTOR, 12-10 GA
HS2HA	137208-01	HOUSING-SOCKET, 2 CAVITY-HIGH AMP
HP2HA	137207-01	HOUSING-PIN, 2 CAVITY-HIGH AMP
TS-HA	137210-01	SOCKET-CONNECTOR, 10AWG HIGH AMP
TP-HA	137209-01	PIN-CONNECTOR, 10AWG HIGH AMP
H-HA	104100-01	HOUSING, 1 CAVITY 75 AMP
T-HA	104100-03	TERMINAL 10 AWG - 6 AWG 75 AMP

BALLOON CALLOUT LEGEND

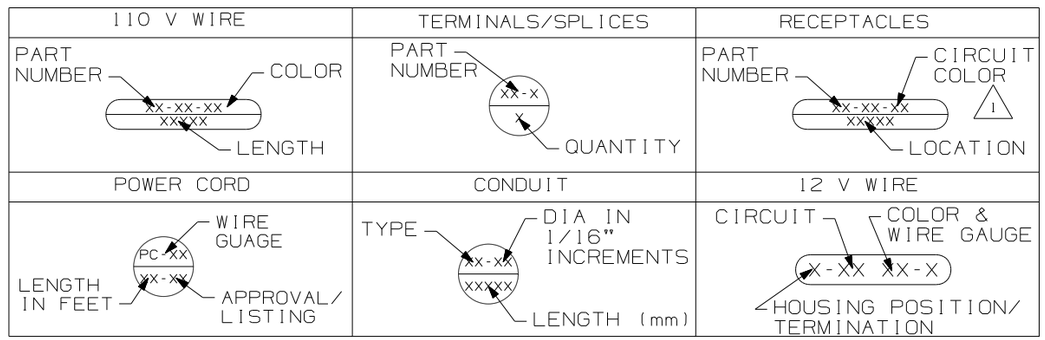

1 FOR RECP-BLANK, DET-X DENOTES DETAIL VIEW.

2 CONTACT WIRE PREP PRIOR TO USING FOR TOOLING PURPOSES.

NOTES:

COPYRIGHT 2006 WINNEBAGO INDUSTRIES, INC.

DFTR	ORIG. DATE
CHKR	ALL DIMENSIONS ARE IN MILLIMETERS
P.E.	
M.E.	FIRST USED 96 MH'S
DSNR	

UNSPECIFIED TOLERANCES ARE: WHOLE DIM (X) : ONE-PLACE (X.X) : TWO-PLACE (X.XX) : ANGLE :

MATERIAL:

THIRD ANGLE PROJECTION

DO NOT SCALE DRAWING

TITLE: PART LISTING-ELECTRICAL

SHEET 1 OF 7 | PART NO 121339 | REV

DWG NO 121339

WIRE-SINGLE INS CONDUCTOR, STRANDED

NO.	PART NUMBER	DESCRIPTION
18-W 18-Y	156658-01 156658-02	WIRE, 18 GA. WHITE, PVC WIRE, 18 GA. YELLOW, PVC
16-Y 16-W	89360-01 89360-02	WIRE, 16 GA. YELLOW, PVC WIRE, 16 GA. WHITE, PVC
14-Y 14-W	48554-02 48554-04	WIRE, 14 GA. YELLOW, PVC WIRE, 14 GA. WHITE, PVC
12-Y 12-W	48555-02 48555-04	WIRE, 12 GA. YELLOW, PVC WIRE, 12 GA. WHITE, PVC
10-Y 10-W	8000-03 8000-05	WIRE, 10 GA. YELLOW, PVC WIRE, 10 GA. WHITE, PVC
8-B 8-G	8005-01 8005-03	WIRE, 8 GA. BLACK, PVC WIRE, 8 GA. GREEN, PVC
6-B 6-G	70065-01 70065-03	WIRE, 6 GA. BLACK, PVC WIRE, 6 GA. GREEN, PVC
18-WX 18-YX	121015-01 121015-02	WIRE, 18 GA. WHITE, XLPE WIRE, 18 GA. YELLOW, XLPE
16-YX 16-WX	116675-01 116675-02	WIRE, 16 GA. YELLOW, XLPE WIRE, 16 GA. WHITE, XLPE
14-YX 14-WX	98586-01 98586-02	WIRE, 14 GA. YELLOW, XLPE WIRE, 14 GA. WHITE, XLPE
12-YX 12-WX	98609-01 98609-02	WIRE, 12 GA. YELLOW, XLPE WIRE, 12 GA. WHITE, XLPE
10-YX 10-WX	116676-03 116676-04	WIRE, 10 GA. YELLOW, XLPE WIRE, 10 GA. WHITE, XLPE
8-BX 8-GX	116674-01 116674-02	WIRE, 8 GA. BLACK, XLPE WIRE, 8 GA. GREEN, XLPE
6-BX 6-GX	116687-01 116687-02	WIRE, 6 GA. BLACK, XLPE WIRE, 6 GA. GREEN, XLPE

WIRE-NM SHEATHED CABLE

NO.	PART NUMBER	DESCRIPTION
14 UL	8027-01-000	WIRE 14-2 ROMEX W/GROUND (UL)
14 CA	8023-02-000	WIRE 14-2 ROMEX W/GROUND (CAN)
12 UL	8026-01-000	WIRE 12-2 ROMEX W/GROUND (UL)
12 CA	8023-01-000	WIRE 12-2 ROMEX W/GROUND (CAN)
12-3 UL	8026-03-000	WIRE 12-3 ROMEX W/GROUND (UL)
12-3 CA	8023-03-000	WIRE 12-3 ROMEX W/GROUND (CAN)
10 UL	8022-01-000	WIRE 10-2 ROMEX W/GROUND (UL)
10 CA	24743-01-000	WIRE 10-2 ROMEX W/GROUND (CAN)
6-3 UL	108914-01-000	WIRE 6-3 ROMEX W/GROUND (UL)
6-3 CA	113136-01-000	WIRE 6-3 ROMEX W/GROUND (CAN)
6-2 UL	108914-02-000	WIRE 6-2 ROMEX W/GROUND (UL)
4-3 UL	128375-01-000	WIRE 4-3 ROMEX W/GROUND (UL)
4-3 CA	128375-01-000	WIRE 4-3 ROMEX W/GROUND (CAN)

CONDUIT

NO.	PART NUMBER	DESCRIPTION	TEMP.
C-4	41953-07-000	CONDUIT-CONVOLUTE,SLIT .25"ID	194°F
C-6	41953-06-000	CONDUIT-CONVOLUTE,SLIT .38"ID	194°F
C-8	41953-01-000	CONDUIT-CONVOLUTE,SLIT .50"ID	194°F
C-10	41953-02-000	CONDUIT-CONVOLUTE,SLIT .63"ID	194°F
C-16	41953-03-000	CONDUIT-CONVOLUTE,SLIT 1.0"ID	194°F
C-24	41953-08-000	CONDUIT-CONVOLUTE,SLIT 1.5"ID	194°F
C-32	41953-15-000	CONDUIT-CONVOLUTE,SLIT 2.0"ID	194°F
CX-8	41953-09-000	CONDUIT-CONVOLUTE,SLIT .50"ID	239°F
CX-12	41953-10-000	CONDUIT-CONVOLUTE,SLIT .75"ID	239°F
CX-16	41953-11-000	CONDUIT-CONVOLUTE,SLIT 1.0"ID	239°F
CX-20	41953-13-000	CONDUIT-CONVOLUTE,SLIT 1.25"ID	239°F
CX-24	41953-14-000	CONDUIT-CONVOLUTE,SLIT 1.50"ID	239°F
CX-32	41953-16-000	CONDUIT-CONVOLUTE,SLIT 2.0"ID	239°F
CN-10	41953-05-000	CONDUIT-CONVOLUTE,NOT SLIT .63"ID	194°F
CN-16	41953-12-000	CONDUIT-CONVOLUTE,NOT SLIT 1.0"ID	194°F

POWER CORDS

NO.	PART NUMBER	DESCRIPTION
PC-10/28	8054-01-000	POWER CORD 10 GA, 30 AMP, 28 FT. (UL/CA)
PC-10/35	8054-02-000	POWER CORD 10 GA, 30 AMP, 35 FT. (UL/CA)
PC-10/30-CA	8052-01-000	SUPERCEEDED BY 8054-01-000
PC-6/36	108934-01-000	POWER CORD 6 GA, 50 AMP, 36 FT. (UL/CA)
PC-6/36-FX	108934-02-000	POWER CORD 6 GA, 50 AMP, 36 FT. (UL/CSA) SUPERFLEX
PC-6/36-CA	113096-01-000	SUPERCEEDED BY 108934-02-000

BATTERY CABLE LEGEND

COLOR	DESCRIPTION
PURPLE	CHASSIS BATTERY TO SOLENOID
BLUE	HYDRAULIC JACKS PUMP
RED	BATTERY TO STARTER
GREEN	BATTERY TO GENERATOR
YELLOW	COACH BATTERY TO SOLENOID

RECEPTACLES

NO.	PART NUMBER	DESCRIPTION
RCP-1	86738-02-CHT	RECEPTACLE-SINGLE, FLUSH MOUNT
RCP-2	86738-01-CHT	RECEPTACLE-DOUBLE, FLUSH MOUNT
RCP-3	58707-01-000	RECEPTACLE-SINGLE, SURFACE MOUNT
RCP-4	157360-01-000	RECEPTACLE-SINGLE,SURFACE MOUNT,20A
RCP-5	160984-01-CHT	RECEPTACLE-SINGLE,FLUSH MOUNT,20A
RCP-B	58707-02-000	RECEPTACLE-BLANK, JUNCTION
RCP-E	131826-01-CHT	INCLUDES COVER & GASKET

CIRCUIT COLOR LEGEND

110V CIRCUIT	WIRE COLOR	COAXIAL CIRCUIT
A/C CIRCUIT 1	RED	CABLE INPUT W/O SPLITTER
A/C CIRCUIT 2	GRN	REAR TV W/O SPLITTER
GENERAL RECPS 1	BLU	ANTENNA
GENERAL RECPS 2	BRN	FRONT TV
GENERAL RECPS 3	PUR	VCR INPUT
GENERAL RECPS 4	GRY	
REFRIGERATOR/ CONVERTER	YEL	EXT ENT CTR
MICROWAVE	BLK	AUX INPUT
WATER HEATER	WHT	
WASHER/DRYER	GLD	
DISHWASHER	SIL	
	ORG	SATELLITE PLATE INPUT
	ORG/ORG	SATELLITE PLATE OUTPUT
	RED/RED	CABLE INPUT W/SPLITTER
	GRN/GRN	REAR TV W/SPLITTER
	PUR/PUR	VCR OUTPUT

FIRST USED 96 MH'S

DO NOT SCALE DRAWING

TITLE: PART LISTING-ELECTRICAL

SHEET 2 | PART NO 121339 | REV

DWG NO 121339

LAMP ASM-PACKAGE,PANCAKE

NO	PART NUMBER	DESCRIPTION
LF1-1	LAMP 98024-01-CHT SCREW G11-08-16U (4) CONNECTOR 58028-01-000 (2)	LAMP ASM, FROSTED LENS, 1 BULB W/SWITCH PROGRESSIVE DYNAMICS INC.
LF2-1	LAMP 98024-03-CHT SCREW G11-08-16U (6) CONNECTOR 58028-01-000 (2)	LAMP ASM, FROSTED LENS, 2 BULB W/SWITCH PROGRESSIVE DYNAMICS INC.
LO1-1	LAMP 98024-05-CHT SCREW G11-08-16U (4) CONNECTOR 58028-01-000 (2)	LAMP ASM, OPTI CLEAR LENS, 1 BULB W/SWITCH PROGRESSIVE DYNAMICS INC.
LO2-1	LAMP 98024-06-CHT SCREW G11-08-16U (6) CONNECTOR 58028-01-000 (2)	LAMP ASM, OPTI CLEAR LENS, 2 BULB W/SWITCH PROGRESSIVE DYNAMICS INC.
LF1N1	LAMP 98024-07-CHT SCREW G11-08-16U (4) CONNECTOR 58028-01-000 (2)	LAMP ASM, FROSTED LENS, 1 BULB W/O SWITCH PROGRESSIVE DYNAMICS INC.
LF2N1	LAMP 98024-08-CHT SCREW G11-08-16U (6) CONNECTOR 58028-01-000 (2)	LAMP ASM, FROSTED LENS, 2 BULB W/O SWITCH PROGRESSIVE DYNAMICS INC.
LFSN1	LAMP 98024-09-CHT SCREW G11-08-16U (6) CONNECTOR 58028-01-000 (2)	LAMP ASM, SINGLE FROSTED LENS, 2 BULB W/O SWITCH PROGRESSIVE DYNAMICS INC.

LAMP ASM-PACKAGE,HALOGEN

NO	PART NUMBER	DESCRIPTION
HAL	LAMP 123775-01-CHT SCREW (SUPPLIED) CONNECTOR 58028-01-000 (2)	LAMP ASM-HALOGEN, READING 1 BULB
HAL-S	LAMP 123775-01-CHT SPACER 123775-02-CHT SCREW G13-06-16U (3) CONNECTOR 58028-01-000 (2)	LAMP ASM-HALOGEN, READING WITH 3/4" SPACER 1 BULB

LAMP ASM-PACKAGE,PANCAKE

NO	PART NUMBER	DESCRIPTION
LF1-2	LAMP 13741 7-01-CHT SCREW G11-08-16U (4) CONNECTOR 58028-01-000 (2)	LAMP ASM, FROSTED LENS, 1 BULB W/SWITCH PROGRESSIVE DYNAMICS INC.
LF2-2	LAMP 13741 7-04-CHT SCREW G11-08-16U (6) CONNECTOR 58028-01-000 (2)	LAMP ASM, FROSTED LENS, 2 BULB W/SWITCH PROGRESSIVE DYNAMICS INC.
LO1-2	LAMP 13741 7-02-CHT SCREW G11-08-16U (4) CONNECTOR 58028-01-000 (2)	LAMP ASM, OPTI CLEAR LENS, 1 BULB W/SWITCH PROGRESSIVE DYNAMICS INC.
LO2-2	LAMP 13741 7-05-CHT SCREW G11-08-16U (6) CONNECTOR 58028-01-000 (2)	LAMP ASM, OPTI CLEAR LENS, 2 BULB W/SWITCH PROGRESSIVE DYNAMICS INC.
LF1N2	LAMP 13741 7-03-CHT SCREW G11-08-16U (4) CONNECTOR 58028-01-000 (2)	LAMP ASM, FROSTED LENS, 1 BULB W/O SWITCH PROGRESSIVE DYNAMICS INC.
LFSN2	LAMP 13741 7-06-CHT SCREW G11-08-16U (6) CONNECTOR 58028-01-000 (2)	LAMP ASM, SINGLE FROSTED LENS, 2 BULB W/O SWITCH PROGRESSIVE DYNAMICS INC.

LAMP ASM-PACKAGE,PORCH

NO	PART NUMBER	DESCRIPTION
LEXT-1	LAMP 97917-01-CHT SCREW G67-10-129 (4) CONNECTOR 58028-01-000 (2)	LAMP ASM-PORCH, SURFACE MOUNT BARGMAN
LEXT- 2UL	LAMP 8089-01-000 SCREW G68-06-10E (2) CONNECTOR 58028-01-000 (2)	LAMP ASM-PORCH, RECESSED UL LIST JRV PROD
LEXT- 2CA	LAMP 8089-02-000 SCREW G68-06-10E (2) CONNECTOR 58028-01-000 (2)	LAMP ASM-PORCH, RECESSED CAN LIST JRV PROD

LEGEND

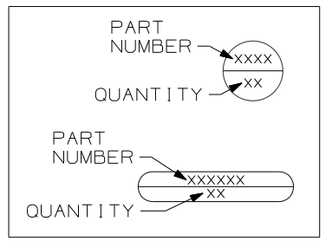

FIRST USED 96 MH'S

DO NOT SCALE DRAWING

TITLE: PART LISTING-ELECTRICAL

SHEET 3 | PART NO 121339 | REV

DWG NO 121339

LAMP ASM-PACKAGE,FLUORESCENT

NO	PART NUMBER	DESCRIPTION
FLU-1	LAMP 91936-02-CHT SCREW G11-08-12U (4) CONNECTOR 58028-01-000 (2)	LAMP ASM-FLUORESCENT 12" 2 BULB W/SWITCH THIN-LITE
FLU-2	LAMP 91936-01-CHT SCREW G11-08-12U (4) CONNECTOR 58028-01-000 (2)	LAMP ASM-FLUORESCENT 18" 2 BULB W/SWITCH THIN-LITE
FLU-3	LAMP 127327-01-CHT SCREW G11-08-12U (2) CONNECTOR 58028-01-000 (2)	LAMP ASM-FLUORESCENT 18" 1-12" BULB W/SWITCH THIN-LITE
FLU-4	LAMP 130338-01-CHT SCREW G11-08-12U (4) CONNECTOR 58028-01-000 (2)	LAMP ASM-FLUORESCENT 18" 2 BULB SURFACE MOUNT W/SWITCH THIN-LITE
FLU-5	LAMP 153464-02-CHT SCREW G11-08-12U (4) CONNECTOR 58028-01-000 (2)	LAMP ASM-FLUORESCENT 12" 2 BULB W/SWITCH COOL WHITE BULB THIN-LITE CUTOUT-122 X 336
FLU-6	LAMP 130338-02-CHT SCREW G11-08-12U (4) CONNECTOR 58028-01-000 (2)	LAMP ASM-FLUORESCENT 18" 2 BULB SURFACE MOUNT WARM WHITE BULB W/SWITCH THIN-LITE
FLU-7	LAMP 153464-05-CHT SCREW G11-08-12U (4) CONNECTOR 58028-01-000 (2)	LAMP ASM-FLUORESCENT 12" 2 BULB W/SWITCH WARM WHITE BULB THIN-LITE CUTOUT-122 X 336
FLUN1	LAMP 91936-04-CHT SCREW G11-08-12U (4) CONNECTOR 58028-01-000 (2)	LAMP ASM-FLUORESCENT 12" 2 BULB W/O SWITCH THIN-LITE
FLUN2	LAMP 91936-03-CHT SCREW G11-08-12U (4) CONNECTOR 58028-01-000 (2)	LAMP ASM-FLUORESCENT 18" 2 BULB W/O SWITCH THIN-LITE
FLUN3	LAMP 153464-01-CHT SCREW G11-08-12U (4) CONNECTOR 58028-01-000 (2)	LAMP ASM-FLUORESCENT 12" 2 BULB W/O SWITCH COOL WHITE BULB THIN-LITE CUTOUT-122 X 336

LAMP ASM-PACKAGE,FLUORESCENT

NO	PART NUMBER	DESCRIPTION
FLUN4	LAMP 153464-03-CHT SCREW G11-08-12U (6) CONNECTOR 58028-01-000 (2)	LAMP ASM-FLUORESCENT 18" 2 BULB W/O SWITCH COOL WHITE BULB THIN-LITE CUTOUT-122 X 480
FLUN5	LAMP 153464-06-CHT SCREW G11-08-12U (6) CONNECTOR 58028-01-000 (2)	LAMP ASM-FLUORESCENT 18" 2 BULB W/O SWITCH WARM WHITE BULB THIN-LITE CUTOUT-122 X 480
FLUN6	LAMP 153464-04-CHT SCREW G11-08-12U (6) CONNECTOR 58028-01-000 (2)	LAMP ASM-FLUORESCENT 12" 2 BULB W/O SWITCH WARM WHITE BULB THIN-LITE CUTOUT-122 X 336

LAMP ASM-PACKAGE,MAKEUP LAMP

NO	PART NUMBER	DESCRIPTION
LMU3-1	LAMP 110235-01-CHT SCREW W/SPACER (SUPPLIED) CONNECTOR 58028-01-000 (2)	LAMP ASM-MAKEUP (W/O MIRROR) 3 BULB (SUPPLIED) PROGRESSIVE DYNAMICS
LMM3-2	LAMP 123774-03-CHT SCREW (SUPPLIED) BULB 123918-01-000 (3) CONNECTOR 58028-01-000 (2)	LAMP ASM-MAKEUP (W/MIRROR) 3 BULB GUSTOFSON
LMU3-2	LAMP 138116-01-CHT SCREW (SUPPLIED) BULB 123918-01-000 (3) CONNECTOR 58028-01-000 (2)	LAMP ASM-MAKEUP (W/O MIRROR) 3 BULB GUSTOFSON
LMU3-3	LAMP 162446-01-CHT SCREW (SUPPLIED) BULB 123918-01-000 (3) CONNECTOR 58028-01-000 (2)	LAMP ASM-MAKEUP (W/O MIRROR) 3 BULB GUSTOFSON
LMU4-1	LAMP 110235-02-CHT SCREW G11-08-16U (2) CONNECTOR 58028-01-000 (2)	LAMP ASM-MAKEUP (W/O MIRROR) 4 BULB PROGRESSIVE DYNAMICS
LMU4-2	LAMP 138116-02-CHT SCREW (SUPPLIED) BULB 123918-01-000 (4) CONNECTOR 58028-01-000 (2)	LAMP ASM-MAKEUP (W/O MIRROR) 4 BULB GUSTOFSON
LMU4-3	LAMP 162446-02-CHT SCREW (SUPPLIED) BULB 123918-01-000 (4) CONNECTOR 58028-01-000 (2)	LAMP ASM-MAKEUP (W/O MIRROR) 4 BULB GUSTOFSON
LMM4-2	LAMP 123774-01-CHT SCREW G11-08-16U (2) BULB 123918-01-000 (4) CONNECTOR 58028-01-000 (2)	LAMP ASM-MAKEUP (W/MIRROR) 4 BULB GUSTOFSON

LAMP ASM-PACKAGE,OTHER

NO	PART NUMBER	DESCRIPTION
LSH-1	LAMP 121935-01-CHT SCREW G11-08-16U (4) CONNECTOR 58028-01-000 (2)	LAMP ASM-SHOWER PROGRESSIVE DYNAMICS INC.
LSH-2	LAMP 164039-01-CHT SCREW G11-08-16U (3) CONNECTOR 58028-01-000 (2)	LIGHT-DOME,SHOWER
LSH-3	LAMP 164040-01-CHT SCREW G13-07-12U (3) CONNECTOR 58028-01-000 (2)	LIGHT-DOME,SHOWER GLASS
LCR-1	LAMP 61424-01-000 SCREW G11-08-12U (4) CONNECTOR 58028-01-000 (2)	LAMP ASM-COURTESY,AISLE RAMCO (RECTANGULAR)
LCS-1	LAMP 108354-01-CHT SCREW G11-08-12U (4) CONNECTOR 58028-01-000 (2)	LAMP ASM-COURTESY,AISLE ITC MARINE (SQUARE)
READ-1	LIGHT-READING 132427-01-CHT SCREW SUPPLIED W/ LIGHT CLIP-U 141395-02-CHT (2) CONNECTOR 58028-01-000 (2)	LIGHT-READING,SWIVEL,ROUND 1 BULB
READ-2	LIGHT-READING 128786-02-CHT SCREW G11-08-16J (2) BULB 123917-01-000 CONNECTOR 58028-01-000 (2)	LIGHT,READING,SWIVEL

LEGEND

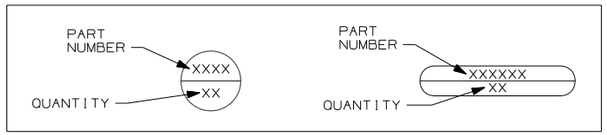

FIRST USED 96 MH'S

DO NOT SCALE DRAWING

TITLE: PART LISTING-ELECTRICAL

SHEET 4 | PART NO 121339 | REV

DWG NO 121339

ANTENNA ASM-PACKAGE

NO	PART NUMBER	DESCRIPTION
ANT-1	ANTENNA 76319-24-000 HARDWARE-INTERIOR 76319-25-000 BUMPER 69726-02-000 (2) CLIP 80734-02-000	ROOF MOUNT TV ANTENNA ASM 25.5" MAST 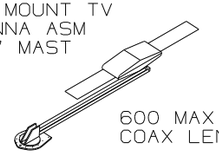 600 MAX COAX LENGTH
ANT-2	ANTENNA 76319-23-000 HARDWARE-INTERIOR 76319-25-000 BUMPER 69726-02-000 (2) ADAPTER SUPPLIED W/ANTENNA	ROOF MOUNT TV ANTENNA ASM 44.5" MAST 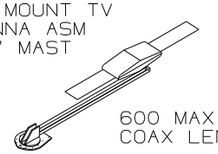 600 MAX COAX LENGTH
ANT-2W	ANTENNA 76319-23-000 HARDWARE-INTERIOR 76319-25-000 BUMPER 69726-02-000 (2) ADAPTER SUPPLIED W/ANTENNA WEDGE 76319-26-000	ROOF MOUNT TV ANTENNA ASM 44.5" MAST 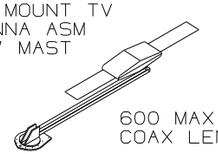 600 MAX COAX LENGTH
ANTA-1	ANTENNA 158270-01-CHT BUMPER 69726-02-000 (2) ADAPTER SUPPLIED W/ANTENNA	ROOF MOUNT TV ANTENNA ASM AUTOMATIC 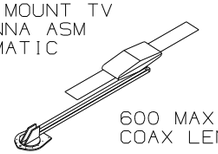 600 MAX COAX LENGTH
ANT-3	ANTENNA-TV ROOF MNT,ROUND 132935-01-000 PLATE-ROOF, CABLE ENTRY 146488-01-000 SCREW G67-10-129 (10) CABLE ASM-COAX 87105-01-006 ADAPTER 82134-01-000	ROOF MOUNT OMNI- DIRECTIONAL ANTENNA MOUNTING SCREWS SUPPLIED WITH ANTENNA 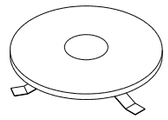

SENSORS

NO	PART NUMBER	DESCRIPTION
LPGD	LP GAS DETECTOR 150138-01-CHT SCREW G68-06-10U (2)	DETECTOR-LP GAS 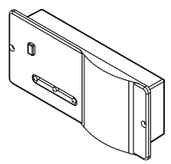

PANELS

NO	PART NUMBER	DESCRIPTION
SOLAR	PANEL-SOLAR 10 WATT 151647-01-000 SCREW G11-08-12U (4)	SOLAR PANEL 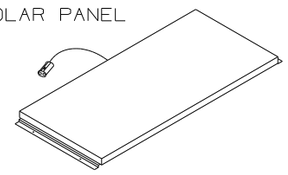

ANTENNA ASM-PACKAGE

ANTEXT-1	CABLE ASM-EXTENS 77069-02-000	RADIO ANTENNA CABLE EXTENSION 2400MM USABLE LENGTH
ANTKIT-1	ADAPTER-PLATE 76319-06-000 SCREW G11-08-08T (6) CLIP-WIRE 80734-02-000 SCREW G11-08-08T	PLATE ASM-ADAPTERS CABLE ROOF MOUNTING PLATE W/ CABLE-CABLE ADAPTER, FITTINGS, AND CABLE RETAINING CLIP 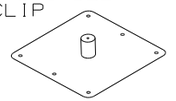
ANT-R	ANTENNA-RADIO 90944-01-000 EXTENDER-SHAFT ANTENNA 109889-04-000 BRACKET-ANTENNA GROUND 147741-01-CHT	ROOF MOUNT RADIO ANTENNA
ANTEXT-2	CABLE ASM-EXTENS 77069-03-000	RADIO ANTENNA CABLE EXTENSION 6600 MM USABLE LENGTH

SATELLITE DISH INSTL

NO	PART NUMBER	DESCRIPTION
DM-1	SATELLITE DISH 137135-02-000 SCREW G67-10-12B (8) PLATE & BRACKET (SUPPLIED) SCREW G67-10-12B (10)	SATELLITE DISH ANTENNA ASM MANUAL SETUP 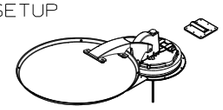
DA-1	SATELLITE DISH 163598-01-CHT PLATE-ROOF,CABLE ENTRY QUAD 146488-03-000 SCREW G67-10-12U (8) (FOR PLATE) SCREW G39-10-12U (12) (FOR SATELLITE DISH)	SATELLITE DISH ANTENNA ASM AUTOMATIC SETUP 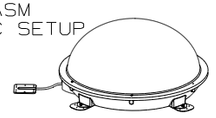
DI-1	SATELLITE DISH 154474-04-CHT SCREW G39-10-12B (12) PLATE 146488-01-000 SCREW G67-10-12B (10)	SATELLITE DISH ANTENNA ASM IN MOTION SETUP 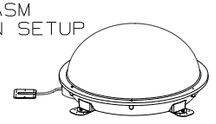

SATELLITE DISH INSTL

NO	PART NUMBER	DESCRIPTION
DA-2	SATELLITE DISH 163598-01-CHT PLATE-ROOF,CABLE ENTRY QUAD 146488-03-000 CABLE ASM-COAX 9" 163598-04-000 ADAPTOR-CABLE TO CABLE 82134-01-000 SCREW G67-10-12U (8) (FOR PLATE) SCREW G39-10-12U (12) (FOR SATELLITE DISH)	SATELLITE DISH ANTENNA ASM AUTOMATIC SETUP 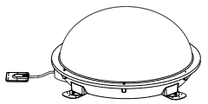
DI-2	SATELLITE DISH 154474-04-CHT PLATE-ROOF,CABLE ENTRY QUAD 146488-03-000 CABLE ASM-COAX 9" 163598-04-000 ADAPTOR-CABLE TO CABLE 82134-01-000 SCREW G67-10-12U (8) (FOR PLATE) SCREW G39-10-12U (12) (FOR SATELLITE DISH)	SATELLITE DISH ANTENNA ASM AUTOMATIC SETUP 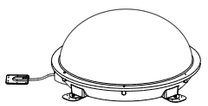
DM-2	SATELLITE DISH 137135-05-000 PLATE-ROOF,ENTRY (SUPPLIED WITH SATELLITE DISH) SCREW G67-10-12U (8) (FOR ROOF PLATE) SCREW G67-10-12U (10) (FOR SATELLITE DISH)	SATELLITE DISH ANTENNA ASM MANUAL SETUP 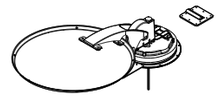

LEGEND

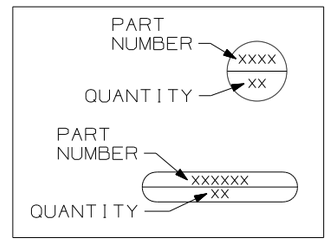

FIRST USED	96 MH'S
	DO NOT SCALE DRAWING
TITLE:	PART LISTING-ELECTRICAL
SHEET 5	PART NO 121339 REV

DWG NO 121339

RECEPTACLE PACKAGE-GFI

NO	PART NUMBER	DESCRIPTION
GFI US	RECEPTACLE 163319-01-CHT BOX 91910-02-000 WIRE-BONDING 133678-03-000 SCREW G13-07-12B (4) CONNECTOR 8313-01-000 TUBING-VINYL 8041-02-000 (300MM) 1	GFI RECEPTACLE WITH COVER AND BOX FOR US APPLICATION 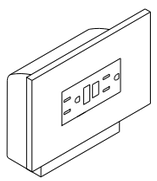
GFI CAN	RECEPTACLE 163319-01-CHT BOX 91910-01-000 WIRE-BONDING 133678-03-000 SCREW G13-07-12B (4) CONNECTOR 8313-01-000 TUBING-VINYL 8041-02-000 (300MM) 1	GFI RECEPTACLE WITH COVER AND BOX FOR CANADA APPLICATION 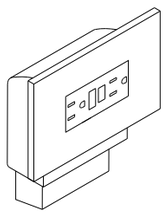

RECEPTACLE PACKAGE-GFI

NO	PART NUMBER	DESCRIPTION
GFI-1 US	RECEPTACLE 163319-01-CHT BOX 133070-01-000 WIRE-BONDING 133678-03-000 SCREW G13-07-12B (4) CONNECTOR 8313-01-000 TUBING-VINYL 8041-02-000 (300MM) 1	GFI RECEPTACLE WITH COVER AND BOX FOR US APPLICATION 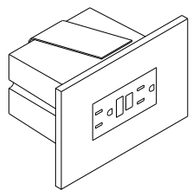
GFI-1 CAN	RECEPTACLE 163319-01-CHT BOX 133070-02-000 WIRE-BONDING 133678-03-000 SCREW G13-07-12B (4) CONNECTOR 8313-01-000 TUBING-VINYL 8041-02-000 (300MM) 1	GFI RECEPTACLE WITH COVER AND BOX FOR CANADA APPLICATION 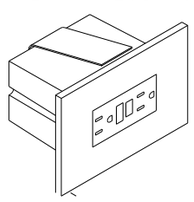

SPACERS

NO	PART NUMBER	DESCRIPTION
SP-01	SPACER 102568-01-XXX	STANDARD 110V RECEPTACLE SPACER (WOOD,VYL RAP,OG) 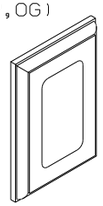
SP-02	SPACER 102568-02-XXX	WOOD SPACER FOR CEILING MOUNTED A/C PREP BOX (US) (WOOD,VYL RAP,OG) 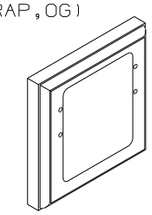
SP-03	SPACER 102568-03-XXX	WOOD SPACER FOR CEILING MOUNTED A/C PREP BOX (CANADA) (WOOD,VYL RAP,OG) 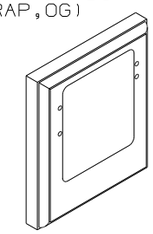
SP-04	SPACER 133713-01-CHT	STANDARD 110V RECEPTACLE SPACER (WOOD,VYL RAP,BEV) 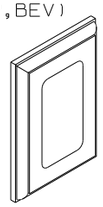
SP-05	SPACER 133713-20-XXX	STANDARD 110V RECEPTACLE SPACER (WOOD,BEV) 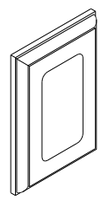
SP-21	SPACER 126052-01-XXX	WOOD SPACER FOR 1 - 110V RECEPTACLE AND 1 - REAR TV (12V) JACK (WOOD,BEV) 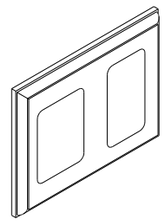

LEGEND

MISC.	SPACER
PART NUMBER → XXXX LISTING → XXX	XXXX → PART NUMBER

1 APPLY TUBING TO BARE GROUND WIRES.

NOTES:

FIRST USED 96 MH'S

DO NOT SCALE DRAWING

TITLE: PART LISTING-ELECTRICAL

SHEET 6 | PART NO 121339 | REV

DWG NO 121339

PREP-A/C,RECESSED (W/OUT FACTORY A/C)

NO	PART NUMBER	DESCRIPTION
PREP A/C-US	BOX 91910-02-000 COVER 84099-02-CHT LABEL 91243-01-000 SCREW G13-07-12B (4) CONNECTOR 8313-01-000 (3)	BOX AND EQUIPMENT USED FOR A/C PREP (W/OUT FACTORY A/C). US APPLICATION (RECESSED IN ROOF) 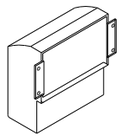
PREP A/C-CAN	BOX 91910-01-000 COVER 84099-02-CHT LABEL 91243-01-000 SCREW G13-07-12B (4) CONNECTOR 8313-01-000 (3)	BOX AND EQUIPMENT USED FOR A/C PREP (W/OUT FACTORY A/C). CANADA APPLICATION (RECESSED IN ROOF) 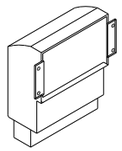

CONNECTION BOX-POWER CORD

NO	PART NUMBER	DESCRIPTION
J-PC 30 J-PC 30-US J-PC 30-CA	BOX 8289-01-000 COVER 8294-01-000 SCREW G67-10-10B (2) WIRE ASM-GROUND 133678-02-000 CONNECTOR 8314-01-000 (3) SCREW-GRND 103291-01-000 CONNECTOR 8356-02-000 CONNECTOR (PC) 8355-01-000	CONNECTION BOX IN POWER CORD COMPT FOR POWER CORD (US & CA APPLICATION) 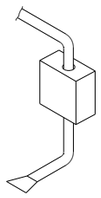

CONNECTION BOX-GENERATOR RECEPTACLE

NO	PART NUMBER	DESCRIPTION
J-RCP 30 J-RCP 30-US J-RCP 30-CA	BOX 8289-01-000 RECEPTACLE 24924-02-000 COVER 69238-01-000 SCREW G67-10-10B (2) WIRE ASM-GROUND 133678-02-000 133678-04-000 SCREW-GRND 103291-01-000 CONNECTOR 8314-01-000 TUBING-VINYL 8041-02-000 (1) (150MM)	CONNECTION BOX IN POWER CORD COMPT FOR THE GENERATOR RECEPTACLE (US & CA APPLICATION) 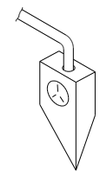

CONNECTION BOX, GENERATOR SERVICE FEED

NO	PART NUMBER	DESCRIPTION
J-GEN 30 J-GEN 30-US J-GEN 30-CA	BOX 8289-01-000 COVER 8294-01-000 SCREW G67-10-10B (2) WIRE ASM-GROUND 133678-02-000 WIRE NUT-GREY 8314-01-000 (3) SCREW-GRND 103291-01-000 CONNECTOR-WIRE 8356-01-000	BOX AND EQUIPMENT USED FOR CONNECTING THE GENERATOR LEADS TO THE SERVICE ENTRANCE WIRES (US & CA APPLICATION) 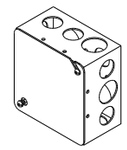

PREP-A/C,SURFACE (W/OUT FACTORY A/C)

NO	PART NUMBER	DESCRIPTION
PREP SURF	BOX 93603-01-000 COVER 53337-01-000 LABEL 91243-01-000 SCREW-GRND 103291-01-000 WIRE-BONDING 8019-01-000 SCREW G11-08-12B (2) TERMINAL 8328-01-000 CONNECTOR 8313-01-000 (2) CONNECTOR 8311-01-000	SURFACE MOUNT, US AND CANADA, BOX AND EQUIPMENT FOR A/C PREP (W/OUT FACTORY A/C). TYPICALLY LOCATED ON OVERHEAD CABINET INNER WALL OR ON CEILING. 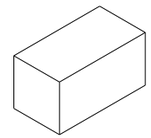

LEGEND

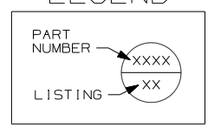

(1) APPLY TUBING TO BARE GROUND WIRES.

NOTES:

FIRST USED 96 MH'S

DO NOT SCALE DRAWING

TITLE: PART LISTING-ELECTRICAL

SHEET 7 | PART NO 121339 | REV

WIRE IDENTIFICATION CHART

CODE/COLOR	FROM:	TO:
A 14 YEL	GALLEY CEILING LAMP SWITCH	GALLEY CEILING LAMP
B 12 YEL	OVERCURRENT PROTECTION (30A BREAKER TYPICAL)	POWER PASSENGER SEAT ("BUDDY SEAT")
C 12 WHT	POWER PASSENGER SEAT	GROUND
D 14 YEL	SHOWER OVHD LAMP SWITCH SEE WIRE PF, START OF 97	SHOWER OVHD LAMP
E 095038-01-	PHONE INPUT JACK	REAR PHONE JACK
F 095038-01-	PHONE INPUT JACK	EXTERIOR PHONE JACK
G 12/ 10 YEL	OVERCURRENT PROTECTION (30A BREAKER TYPICAL)	HIGH SPEED HEATER FAN (USE 10 IF OVER 6' RUN)
H 095038-01-	PHONE INPUT JACK	FRONT PHONE JACK
J 6 BLK	OVERCURRENT PROTECTION (45 OR 55A BREAKER TYP)	COACH 12V PANEL/ CONVERTER BATTERY CHARGE
K 6 BLK	OVERCURRENT PROTECTION (45 OR 55A BREAKER TYP)	COACH 12V PANEL
L 6 GRN	CONVERTER 45 OR 55 AMP	GROUND
M 6 BLK	OVERCURRENT PROTECTION (45 OR 50A BREAKER)	CONVERTER BATTERY CHARGE
N 10 WHT	REFRIGERATOR	GROUND
P 10YEL(BLK)	OVERCURRENT PROTECTION (20A FUSE TYPICAL)	REFRIGERATOR (3 WAY)
R 8 GRN	REFRIGERATOR CHASSIS	GROUND
S 8 OR 6 GRN	GROUND BAR (LEFT SIDE)	CHASSIS GROUND
T 8 OR 6 GRN	GROUND BAR (RIGHT SIDE)	CHASSIS GROUND
U 6 GRN	CONVERTER CHASSIS	GROUND
W 8 GRN	- GROUND STUD	- GROUND STUD

WIRE IDENTIFICATION CHART

CODE/COLOR	FROM:	TO:
X 14 YEL	- CHASSIS BRAKE LAMP CIRCUIT	- CENTER MOUNT BRAKE LAMP
Y 16 YEL	VOLUME CONTROL	RADIO/TV SPEAKER
Z 6 BLK	OVERCURRENT PROTECTION (45 OR 55A BREAKER TYP)	COACH 12V PANEL
AA 16 WHT	SERVICE ENGINE SOON LAMP	VEHICLE SERVICE ENGINE SOON LAMP CIRCUIT
AB 16 WHT	WATER TANK LEVEL SENSORS	GROUND
AC 16 WHT	MAIN HOLDING TANK SENSORS (BLACK WATER)	GROUND
AD 16 WHT	AUXILIARY HOLDING TANK #1 (GRAY WATER)	GROUND
AE 16 WHT	AUXILIARY HOLDING TANK #2 (GRAY WATER)	GROUND
AF 12 YEL	WATER PUMP SWITCH #1	MONITOR PANEL WATER PUMP SWITCH
AG 12 YEL	WATER PUMP SWITCH #1	MONITOR PANEL WATER PUMP SWITCH
AH 14 YEL	OVERCURRENT PROTECTION (10A FUSE TYPICAL)	BRAKE LAMP SWITCH WARNING LAMP (IGNITION RUN/START FED)
AJ 12 WHT	CHASSIS GROUND	BODY GROUND
AK 12 WHT	CHASSIS GROUND	BODY GROUND
AL 12 YEL	HEATER CONTROL (LOW SPEED)	BLOWER MOTOR (LOW SPEED)
AM 12YEL(WHT)	HEATER CONTROL (MEDIUM/LOW SPEED)	BLOWER MOTOR (MEDIUM/LOW SPEED)
AN 12 YEL	HEATER CONTROL (MEDIUM/HIGH SPEED)	BLOWER MOTOR (MEDIUM/HIGH SPEED)
AP 14 YEL	IGNITION SWITCH ACCESSORY FEED	OVERCURRENT PROTECTION (15A FUSE TYPICAL)
AR 14 WHT	HORN, FOG LAMPS	GROUND
AS 18 WHT	DASH RADIO	RIGHT FRONT SPEAKER (NEGATIVE)

WIRE IDENTIFICATION CHART

CODE/COLOR	FROM:	TO:
AT 18 WHT	DASH RADIO	LEFT FRONT SPEAKER (NEGATIVE)
AU 16 YEL	OVERCURRENT PROTECTION (15A BREAKER TYPICAL)	FRONT CARGO LAMP SWITCH (IGNITION ACCESSORY FED)
AW 16 YEL	FRONT CARGO LAMP SWITCH	REAR CARGO LAMP SWITCH
AX 16 YEL	FRONT CARGO LAMP SWITCH	REAR CARGO LAMP SWITCH
AY 16 YEL	REAR CARGO LAMP SWITCH	CARGO LAMPS
BA 14 WHT	WINDSHIELD WIPER MOTOR	GROUND
BB 16 YEL	OVERCURRENT PROTECTION (6A BREAKER TYPICAL)	INSTRUMENT PANEL GAUGES (IGNITION ACCESSORY FED)
BC 14 WHT	INDICATOR LAMPS	GROUND
BD 14 YEL	OVERCURRENT PROTECTION (10A FUSE TYPICAL)	BRAKE LAMP SWITCH
BE 12 WHT	BLOWER MOTOR	GROUND
BF 14 WHT	WASHER BOTTLE PUMP/HORN	GROUND
BG 14 YEL	FUEL SENDER	FUEL GAUGE
BH 14 YEL	RUN ONLY POWER RELAY	ENGINE WIRING
BJ 16 YEL	OVERCURRENT PROTECTION (10A FUSE TYPICAL)	ENGINE WIRING (IGNITION RUN/START FED)
BK 14 YEL	OVERCURRENT PROTECTION (10A FUSE TYPICAL)	HORN RELAY FEED
BL 16 WHT	CIGAR LIGHTER	GROUND
BM 16 YEL	CHASSIS BATTERY POWER	CIGAR LIGHTER
BN 16 YEL	ACCESSORY POWER	SPOTLAMP
BP 14 WHT	POWER MIRROR	GROUND

WIRE IDENTIFICATION CHART

CODE/COLOR	FROM:	TO:
BR 14 YEL	POWER MIRROR (RIGHT SIDE)	POWER MIRROR CONTROL SWITCH
BS 14 YEL	POWER MIRROR HEAT SWITCH	POWER MIRRORS
BT 14 YEL	POWER MIRROR (LEFT SIDE)	POWER MIRROR CONTROL SWITCH
BU 14 YEL	RUN ONLY POWER	POWER MIRROR HEAT/ CONTROL SWITCHES
BW 12 YEL	IGNITION SWITCH	ACCESSORY CIRCUIT FEED
BX 12YEL(ORN)	IGNITION SWITCH RUN ONLY SOURCE	GENERAL(TURN, BACK UP,DASH IGNITION CIRCUIT,ETC)
BY 12YEL/8BLK	OVERCURRENT PROTECTION (16GA FUSELINK)(8GA PASSTHRU)	CHASSIS BATTERY SOURCE(AUTO AC BLOWER,POWER DRIVER SEAT,ETC)
CA 12 YEL	OVERCURRENT PROTECTION (16GA FUSELINK TYPICAL)	CHASSIS BATTERY SOURCE
CB 12 YEL	IGNITION SWITCH START SOURCE	START CIRCUIT SOURCE
CC 16 YEL	ALTERNATOR	ALTERNATOR WARNING LAMP
CD 16 YEL	OIL PRESSURE WARNING SENDER	OIL PRESSURE WARNING LAMP
CE 16 YEL	WATER TEMPERATURE WARNING SENDER	WATER TEMPERATURE WARNING LAMP
CF 14 YEL	REAR TV JACK	POWER FEED SWITCH
CG 14 YEL	CLUTCH/NEUTRAL SWITCH	START ISOLATION RELAY
CH 14 YEL	START RELAY	ENGINE WIRING
CJ 14 YEL	WINDSHIELD WIPER/WASHER CONTROL SWITCH	WINDSHIELD WASHER PUMP
CK 16 YEL	TELEVISION	SPEAKER (POSITIVE)
CL 16 WHT	TELEVISION	SPEAKER (NEGATIVE)
CM 10 YEL	OVERCURRENT PROTECTION (15A BREAKER TYPICAL)	INVERTER FEED

WIRE IDENTIFICATION CHART

CODE/COLOR	FROM:	TO:
CN 10 WHT	INVERTER	GROUND
CP 12 WHT	INVERTER CHASSIS	GROUND
CR 16 WHT	VEHICLE CHECK ENGINE LAMP CIRCUIT	CHECK ENGINE LAMP
CS 16 WHT	REMOTE THERMOSTAT (RC TERM/ORG EXPORT AIR)	GROUND
CT 16 YEL	DAYTIME RUNNING LAMP MODULE OUTPUT(PIN 30)	LOW BEAM HEADLAMP CIRCUIT
CU 16 YEL	DAYTIME RUNNING LAMP MODULE ENABLE(PIN 85)	RUN/START CIRCUIT
CW 14 YEL	DAYTIME RUNNING LAMP MODULE POWER(PIN 87A)	CHASSIS BATTERY POWER
CX 16 WHT	DAYTIME RUNNING LAMP MODULE GROUND(PIN 87)	GROUND
CY 16 YEL	DAYTIME RUNNING LAMP MODULE HIGH BEAM DISABLE(PIN 86)	HIGH BEAM HEADLAMP CIRCUIT
DA 12 YEL	SHOWER SUMP SYSTEM PUMP SWITCH	SHOWER SUMP SYSTEM PUMP
DB 12 WHT	SHOWER SUMP SYSTEM PUMP	GROUND
DC 16 YEL	REAR ROOF AIR CONDITIONER EXHAUST CIRCUIT	THERMOSTAT
DD 16 YEL	REAR ROOF AIR CONDITIONER COOL CIRCUIT	THERMOSTAT (Y TERM-EXPORT AIR/YEL)
DE 16 YEL	REAR ROOF AIR CONDITIONER HIGH SPEED FAN CIRCUIT	THERMOSTAT (H TERM-EXPORT AIR/BLU)
DF 16 YEL	REAR ROOF AIR CONDITIONER LOW SPEED FAN CIRCUIT	THERMOSTAT (G TERM-EXPORT AIR/RED)
DG 12YEL(GRY)	IGNITION SWITCH	ACCESSORY/RUN FEED
DH 14 YEL	EMERGENCY SHUTDOWN GAUGE	FUEL SOLENOID (DIESEL ENGINE)
DJ 16 YEL	TV/RADIO SPEAKER SWITCHING RELAY OUTPUT	LEFT REAR SPEAKER POSITIVE
DK 16 WHT	TV/RADIO SPEAKER SWITCHING RELAY OUTPUT	LEFT REAR SPEAKER NEGATIVE

WIRE IDENTIFICATION CHART

CODE/COLOR	FROM:	TO:
DL 16 YEL	TV/RADIO SPEAKER SWITCHING RELAY OUTPUT	RIGHT REAR SPEAKER POSITIVE
DM 16 WHT	TV/RADIO SPEAKER SWITCHING RELAY OUTPUT	RIGHT REAR SPEAKER NEGATIVE
DN 10 YEL	BATTERY DISCONNECT RELAY	CIRCUIT BREAKER SLIDEOUT ROOM CIRCUIT BRKR
DP 14 YEL	TV/RADIO SPEAKER FEED SELECT SWITCH	TV/RADIO SPEAKER SWITCHING RELAY COIL INPUT OR AMPLIFIER
DR 16 YEL	HWH WIRING OR KWIKEE FRONT SLIDE MODULE	SLIDEOUT SWITCH (ROOM ONE EXTEND)
DS 16 WHT	CONTROL MODULE (FRONT SLIDE)(GROUND)	SLIDEOUT SWITCH (FRONT SLIDEOUT)
DT 16 YEL	SLIDEOUT ROOM RELAY (PIN 30)	SLIDEOUT ROOM CONTROL SWITCH
DU 16 YEL	HWH WIRING OR KWIKEE FRONT SLIDE MODULE	SLIDEOUT SWITCH (ROOM ONE RETRACT)
DW 16 WHT	SLIDEOUT ROOM SWITCH (G) (SWITCHED GROUND TO PUMP)	HWH WIRING (SWITCHED GROUND TO PUMP)
DX 16 WHT	HWH WIRING (G) (GROUND)	SLIDEOUT ROOM SWITCH (GROUND)
DY 16 WHT	HWH WIRING (G) (JACK SENSE; SWITCHED GROUND)	SLIDEOUT ROOM RELAY (JACK SENSE; SWITCHED GROUND)
EA 16 YEL	HWH WIRING (G) (ACCESSORY POWER)	SLIDEOUT ROOM RELAY (ACCESSORY POWER)
EB 16 YEL	SLIDEOUT ROOM RELAY (G) (SWITCHED ACCESSORY POWER)	FRT/RR SLIDEOUT ROOM SWITCH (SWITCHED EXTEND/RETRACT PWR)
EC 10 YEL	CHASSIS BATTERY POWER SOURCE (BATTERY MODE SOLENOID POST)	THRU FUSE TO AMP SOURCE SELECT RELAY(PIN 87)(OPTION 21V,95 Q)
ED 10 YEL	COACH BATTERY POWER SOURCE (BATTERY MODE SOLENOID POST)	THRU FUSE TO AMP SOURCE SELECT RELAY(PIN 87A)(OPTION 21V,95Q)
EE 16 YEL	AIR RIDE SUSPENSION LEFT DOWN SWITCH POSITION	AIR RIDE SUSPENSION LEFT HEIGHT CONTROL BOX
EF 16 YEL	AIR RIDE SUSPENSION LEFT UP SWITCH POSITION	AIR RIDE SUSPENSION LEFT HEIGHT CONTROL BOX
EG 16 WHT	AIR RIDE SUSPENSION WIRE ASM GROUND	AIR RIDE SUSPENSION CONTROL LAMP GROUNDS
EH 16 YEL	AIR RIDE SUSPENSION RIGHT DOWN SWITCH POSITION	AIR RIDE SUSPENSION RIGHT HEIGHT CONTROL BOX

WIRE IDENTIFICATION CHART

CODE/COLOR	FROM:	TO:
EJ 16 YEL	AIR RIDE SUSPENSION RIGHT UP SWITCH POSITION	AIR RIDE SUSPENSION RIGHT HEIGHT CONTROL BOX
EK 16 YEL	AIR RIDE SUSPENSION AUTO MODE SWITCH POSITION	AIR RIDE SUSPENSION HEIGHT CONTROL BOXES
EL 16 YEL	RUN ONLY POWER	AIR RIDE SUSPENSION AUTO/MANUAL MODE SWITCH
EM 16 YEL	AIR RIDE SUSPENSION COMPRESSOR	COMPRESSOR ON WARNING LAMP
EN 16 YEL	AIR RIDE SUSPENSION MANUAL MODE SWITCH POSITION	LEVEL CONTROL SWITCHES AND INDICATOR LAMP
EP 14 YEL	OVERCURRENT PROTECTION (15A BREAKER TYPICAL)	SPOTLAMP
ER 16 YEL	OVERCURRENT PROTECTION (6A BREAKER TYPICAL)	ELECTRIC STEP KILL SWITCH
ES 16 YEL	ELECTRIC STEP KILL SWITCH	ELECTRIC STEP
ET 16 YEL	OVERCURRENT PROTECTION (6A BREAKER TYPICAL)	REFRIGERATOR (2 WAY)
EU 16 WHT	REFRIGERATOR (2 WAY)	GROUND
EW 14 YEL	FUEL HEATER SWITCH	FUEL HEATER (DIESEL ENGINE)
EX 14 YEL	TELEVISION POWER SWITCH	TELEVISION WALL PLATE
EY 12YELLTBLU	OVERCURRENT PROTECTION (16GA FUSELINK TYPICAL)	IGNITION SWITCH FEED #2
FA 14 YEL	DRIVER'S DOOR PASSENGER SIDE POWER WINDOW SWITCH(DOWN,PIN2)	PASSENGER'S POWER WINDOW SWITCH(PIN 2)
FB 14 YEL	DRIVER'S DOOR PASSENGER SIDE POWER WINDOW SWITCH(UP,PIN 4)	PASSENGER'S POWER WINDOW SWITCH(PIN 4)
FC 14 YEL	PASSENGER'S DOOR POWER WINDOW SWITCH(DOWN,PIN 1)	PASSENGER'S DOOR POWER WINDOW MOTOR(DOWN)
FD 14 YEL	PASSENGER'S DOOR POWER WINDOW SWITCH(UP,PIN 5)	PASSENGER'S DOOR POWER WINDOW MOTOR(UP)
FG 10 YEL	AMPLIFIER POWER SOURCE SELECT RELAY (PIN 30)	AMPLIFIER POWER FEED (DELUXE SOUND SYSTEM,95 LUXOR)
FH 10 WHT	AMPLIFIER (DELUXE SOUND SYSTEM,95 LUXOR)	GROUND

WIRE IDENTIFICATION CHART

CODE/COLOR	FROM:	TO:
FJ 12 YEL	WATER PUMP SWITCH #2 (THREE SWITCH SYSTEM)	WATER PUMP SWITCH #1 (THREE SWITCH SYSTEM)
FK 12 YEL	WATER PUMP SWITCH #2 (THREE SWITCH SYSTEM)	WATER PUMP SWITCH #1 (THREE SWITCH SYSTEM)
FL 14 YEL	SECOND PORCH LAMP SWITCH	SECOND PORCH LAMP
FM 14 WHT	SOLENOID MOUNTING BOLT	GROUND
FN 16 YEL	SOURCE SELECTOR SWITCH (DELUXE SOUND SYSTEM,95 LUXOR)	AMP & EQUALIZER REMOTE TRIGGER (DELUXE SOUND SYSTEM,95 LUXOR)
FP 16 YEL	EXHAUST BRAKE SWITCH (DIESEL PUSHER CHASSIS)	CHASSIS EXHAUST BRAKE HARNESS & BRAKE ON DASH INDICATOR LAMP
FR 14 YEL	FORD RUN/ACCESSORY IGNITON CIRCUIT(WHT/PUR,10A FUSED)	DOCKING LAMPS, RELAY TRIGGER, REAR MONITOR CAMERA FEED
FS 14 YEL	DOCKING LAMPS RELAY(PIN 87)	DOCKING LAMPS
FT 14 WHT	DOCKING LAMPS	GROUND
FU 14 YEL	AUTOMOTIVE AIR WIRING	FORD A/C COMPRESSOR CLUTCH SWITCH CIRCUIT
FW 14 YEL	DOCKING LAMPS SWITCH	DOCKING LAMPS RELAY(PIN 30)
FX 12 YEL	OVERCURRENT PROTECTION (30A BRKR OR FUSE)	POWER DRIVER SEAT (I.E.,6 WAY)
FY 12 WHT	POWER DRIVER SEAT (I.E.,6 WAY)	GROUND
GA 14 YEL	WATER SYSTEM WINTERIZATION SWITCH	WINTERIZATION VALVE
GB 14 YEL	WATER HEATER BYPASS SWITCH	WATER HEATER BYPASS VALVE
GC 16 YEL	SLIDEOUT ROOM SPDT SWITCH (M) (SWITCHED WIRE)	HWH WIRING (SWITCHED WIRE)
GD 16 YEL	WIPER CONTROL MODULE	WIPER MOTOR (S TERMINAL)
GE 16 YEL	SWITCHED DOME LAMP FEED	DOME LAMP
GF 16 WHT	COMMON REAR CHANNEL SPEAKER RETURN	REAR SPEAKERS

WIRE IDENTIFICATION CHART

CODE/COLOR	FROM:	TO:
GG 16 YEL	RADIO REMOTE TRIGGER (DELUXE SOUND OPTION)	SOURCE SELECTOR SWITCH (LUXOR)
GH 14 WHT	GLOW PLUG WAIT LAMP (DIESEL ENGINE)	ENGINE SENDER
GJ 16 YEL	COACH BATTERY POWER (UPSTREAM OF DISCONNECT)	LP DETECTOR AND/OR SOLAR PANEL WIRING OVERCURRENT PROTECTION
GK 14 YEL	AIR HORN SWITCH	CHASSIS HORN
GL 16 WHT	WATER/HOLDING TANKS LEVEL SENSORS	GROUND
GM 16 YEL	JET AIR RIDE SUSPENSION PRESSURE SENSORS	CHECK REAR AIR SUSPENSION DASH WARNING LAMP
GN 16 YEL	REAR TV SPEAKER OUTPUT (POSITIVE)	REAR TV SPEAKER (POSITIVE)
GP 16 WHT	REAR TV SPEAKER OUTPUT (NEGATIVE)	REAR TV SPEAKER (NEGATIVE)
GR 14 YEL	THERMOSTATICALLY CONTROLLED ROOF VENT (SEND)	THERMOSTAT (RETURN)
GS 14 YEL	THERMOSTATICALLY CONTROLLED ROOF VENT (RETURN)	THERMOSTAT (RETURN)
GT 16 YEL	RADIO POWER SWITCH (MEMORY FEED)	RADIO (MEMORY FEED)
GU 16 YEL	DEFOG MODULE OUTPUT	DEFOG RELAY, INDICATOR LAMP
GW 16 WHT	DEFOG SWITCH ON/OFF	DEFOG MODULE ON/OFF
GX 16/12 WHT	STEP COVER SWITCH (REF AAA-16/KA-12)	GROUND
GY 12 YEL	DEFOG RELAY	DEFOG UNIT
HA 14 YEL	READING LAMPS SWITCH (93 VANS)	READING LAMPS
HB 14 YEL	"MOOD" LAMPS SWITCH (93 VANS)	"MOOD" LAMPS
HC 14 YEL	12V POWER SOURCE (93 VANS)	OVERCURRENT PROTECTION (15A FUSE TYPICAL)
HD 14 YEL	SOFA SLIDE MOTOR POSITIVE (94 VANS)	SOFA MONOPLEX CONTROLLER

WIRE IDENTIFICATION CHART

CODE/COLOR	FROM:	TO:
HE 14 WHT	SOFA SLIDE MOTOR NEGATIVE (94 VANS)	SOFA MONOPLEX CONTROLLER
HF 14 YEL	SOFA RECLINE MOTOR POSITIVE (94 VANS)	SOFA MONOPLEX CONTROLLER
HG 14 WHT	SOFA RECLINE MOTOR NEGATIVE (94 VANS)	SOFA MONOPLEX CONTROLLER
HH 16 YEL	SOFA MONOPLEX SWITCH (94 VANS)	SOFA MONOPLEX CONTROLLER
HJ 16 WHT	SOFA MONOPLEX SWITCH (94 VANS)	GROUND
HK 14 WHT	SOFA MONOPLEX CONTROLLER (94 VANS)	GROUND
HL 14 YEL	FLOOD LAMP SWITCH (94 VANS)	FLOOD LAMP
HM 16 YEL	REAR TV SPEAKER OUTPUT (POSITIVE)	REAR TV SPEAKER (POSITIVE)
HN 16 WHT	REAR TV SPEAKER OUTPUT (NEGATIVE)	REAR TV SPEAKER (NEGATIVE)
HP 16 YEL	OVERCURRENT PROTECTION (94 VANS)	REAR AC
HR 14 YEL	SWITCH (94 1200 MODEL VAN)	12VOLT RECEPTACLE
HS 16 YEL	SOLAR PANEL (1HS INDICATOR TO BATTERY)	COACH BATTERY THRU OVERCURRENT PROTECTION
HT 16 WHT	SOLAR PANEL (1HT INDICATOR TO GROUND)	GROUND
HU 16 YEL	GENERATOR SWITCH (LED)	GENERATOR (POSITIVE SIGNAL)
HW 16 YEL	LICENSE PLATE LAMP FEED	LICENSE PLATE LAMP
HX 16 YEL	CHASSIS CLEARANCE LAMP CRT #2	CLEARANCE/MARKER LAMPS
HY 12 WHT	DEFOG UNIT	GROUND
JA 14 YEL	OVERCURRENT PROTECTION (15A FUSE/BREAKER TYPICAL)	WATER PUMP,MONITOR PANEL,ETC ("CLEAN CIRCUIT",REF JP)
JB 14 YEL	OVERCURRENT PROTECTION (15A FUSE/BREAKER TYPICAL)	FURNACE, ROOF VENT,ETC (REF JM)

WIRE IDENTIFICATION CHART

CODE/COLOR	FROM:	TO:
JC 14 YEL	OVERCURRENT PROTECTION (15A FUSE/BREAKER TYPICAL)	COACH LIGHTING, ETC CIRCUIT #1 (REF NC)
JD 14 YEL	OVERCURRENT PROTECTION (15A FUSE/BREAKER TYPICAL)	COACH LIGHTING, ETC CIRCUIT #2 (REF ND)
JE 14 YEL	OVERCURRENT PROTECTION (15A FUSE/BREAKER TYPICAL)	COACH LIGHTING, ETC CIRCUIT #3 (REF NE)
JF 14 YEL	OVERCURRENT PROTECTION (15A FUSE/BREAKER TYPICAL)	COACH LIGHTING, ETC CIRCUIT #4 (REF NF)
JG 14 YEL	OVERCURRENT PROTECTION (15A FUSE/BREAKER TYPICAL)	COACH LIGHTING, ETC(ALT CLEAN) CIRCUIT #5 (REF JN)
JH 14 YEL	MAIN FURNACE (12V POWER)	MAIN FURNACE THERMOSTAT
JJ 14 YEL	MAIN FURNACE (HEAT)	MAIN FURNACE THERMOSTAT
JK 14 YEL	AUXILIARY FURNACE	AUXILIARY FURNACE THERMOSTAT
JL 14 YEL	AUXILIARY FURNACE	AUXILIARY FURNACE THERMOSTAT
JM 14 WHT	MAIN FURNACE	GROUND
JN 14 WHT	COACH LIGHTING CIRCUIT #5 (REF JG)	GROUND(ALTERNATE CLEAN CIRCUIT FOR LINEAR CONVERTER)
JP 14 WHT	"CLEAN CIRCUIT" DEVICES (REF JA)	GROUND
JR 16 YEL	MONITOR PANEL	LP TANK #2 LEVEL SENSOR
JS 12 YEL	MONITOR PANEL WATER PUMP SWITCH	WATER PUMP
JT 16 YEL	MONITOR PANEL	LP TANK #1 LEVEL SENSOR
JU 14 YEL	MONITOR PANEL WATER HEATER SWITCH	WATER HEATER (BLU)
JW 14 YEL	MONITOR PANEL WATER HEATER SWITCH	WATER HEATER (BRN)
JX 14 WHT	WATER HEATER	GROUND
JY 12 WHT	WATER PUMP	GROUND

WIRE IDENTIFICATION CHART

CODE/COLOR	FROM:	TO:
KA 12 YEL	OVERCURRENT PROTECTION (25A BREAKER TYPICAL)	ELECTRIC STEP BATTERY POWER
KB 10 YEL	OVERCURRENT PROTECTION (25A BREAKER TYPICAL)	ELECTRIC STEP KILL SWITCH (OLD STEP WIRING STYLE)
KC 10 YEL	ELECTRIC STEP KILL SWITCH (OLD STEP WIRING STYLE)	ELECTRIC STEP
KD 18 WHT	ELECTRIC STEP DOOR JAMB SWITCH	ELECTRIC STEP
KE 14 YEL	RUN ONLY POWER SOURCE	GENERAL PURPOSE(RELAY TRIGGER, REAR AUTO HTR,DRL,MONITOR,ETC)
KF 16 WHT	COACH BATTERY DISCONNECT RELAY SWITCH	GROUND
KG 14 YEL	POWER LIFT VENT (BLU)	POWER LIFT SWITCH(UP)
KH 14 YEL	POWER LIFT VENT (RED)	POWER LIFT SWITCH(DOWN)
KJ 14 YEL	POWER LIFT VENT (BLK)	FAN SWITCH
KK 18 YEL	REAR STEREO	RIGHT SPEAKER (POSITIVE)
KL 18 WHT	REAR STEREO	RIGHT SPEAKER (NEGATIVE)
KM 14 YEL	POWER LIFT VENT LAMP	LAMP SWITCH
KN 18 YEL	REAR STEREO	LEFT SPEAKER (POSITIVE)
KP 18 WHT	REAR STEREO	LEFT SPEAKER (NEGATIVE)
KR 14 WHT	REAR STEREO ANTENNA	GROUND
KS 14 YEL	REAR AUTO HEATER SWITCH (HIGH SPEED)	REAR AUTO HEATER
KT 14 YEL	REAR AUTO HEATER SWITCH (MEDIUM SPEED)	REAR AUTO HEATER
KU 14 YEL	REAR AUTO HEATER SWITCH (LOW SPEED)	REAR AUTO HEATER
KW 18 YEL	DASH RADIO	RIGHT FRONT SPEAKER (POSITIVE)

WIRE IDENTIFICATION CHART

CODE/COLOR	FROM:	TO:
KX 18 YEL	DASH RADIO	RIGHT REAR SPEAKER (POSITIVE)
KY 18 YEL	DASH RADIO	LEFT FRONT SPEAKER (POSITIVE)
LA 18 YEL	DASH RADIO	LEFT REAR SPEAKER (POSITIVE)
LB 18 WHT	DASH RADIO	RIGHT REAR SPEAKER (NEGATIVE)
LC 18 WHT	DASH RADIO	LEFT REAR SPEAKER (NEGATIVE)
LD 14 YEL	IGNITION SWITCH ACCESSORY POWER SOURCE	GENERAL PURPOSE(AUX FANS,RELAY TRIGGER,ETC.)
LE 14 YEL	AUXILIARY DEFROST FANS SWITCH (HIGH SPEED)	AUXILIARY DEFROST FANS (BLK)
LF 14 YEL	AUXILIARY DEFROST FANS SWITCH (LOW SPEED)	AUXILIARY DEFROST FANS (RED)
LG 16 YEL	COACH BATTERY DISCONNECT RELAY (TERMINAL I)	COACH BATTERY DISCONNECT RELAY SWITCH
LH 16 YEL	COACH BATTERY DISCONNECT RELAY (TERMINAL S)	COACH BATTERY DISCONNECT RELAY SWITCH
LJ 16 YEL	COACH BATTERY DISCONNECT RELAY BATTERY SIDE FUSE FEED	COACH BATTERY DISCONNECT RELAY SWITCH
LK 16 YEL	COACH BATTERY DISCONNECT RELAY LOAD SIDE FUSE FEED	COACH BATTERY DISCONNECT RELAY SWITCH/INDICATOR LAMP
LL 16 WHT	GENERATOR SWITCH (START)	GENERATOR (RED)
LM 16 WHT	GENERATOR SWITCH (STOP)	GENERATOR (ORN)
LN 16 WHT	GENERATOR SWITCH/INDICATOR (GROUND)	GENERATOR (GRN)
LP 16 YEL	GENERATOR SWITCH/INDICATOR (RUN)	GENERATOR (BLU)
LR 14 YEL	BATTERY MODE SWITCH (AUX START SWITCH)	BATTERY MODE SOLENOID (AUX START SOLENOID)
LS 12 YEL	OVERCURRENT PROTECTION 20A BREAKER TYPICAL,COACH FEED	GENERAL PURPOSE(BATTERY MODE, RADIO POWER,BATTERY CONDITION)
LT 16 YEL	BATTERY CONDITION SWITCH	VOLTMETER (POWER FEED)

WIRE IDENTIFICATION CHART

CODE/COLOR	FROM:	TO:
LU 14 YEL	CHASSIS BRAKE LAMP CIRCUIT	VEHICLE BRAKES, TAG AXLE CONTROL MODULE,ETC.
LW 14 YEL	WIPER CONTROL MODULE (PARK)	WINDSHIELD WIPER MOTOR (FRONT)
LX 14 YEL	WIPER CONTROL MODULE (LOW SPEED)	WINDSHIELD WIPER MOTOR (FRONT)
LY 14 YEL	WIPER CONTROL MODULE (HIGH SPEED)	WINDSHIELD WIPER MOTOR (FRONT)
MA 14 YEL	WIPER CONTROL MODULE (WASHER BOTTLE PUMP)	WINDSHIELD WASHER BOTTLE PUMP (FRONT)
MB 14 YEL	CHASSIS WINDSHIELD WIPER FEED CIRCUIT	OVERCURRENT PROTECTION (6A BREAKER TYPICAL)
MC 16 WHT	INSTRUMENT PANEL LAMPS	GROUND
MD 14 YEL	OVERCURRENT PROTECTION (15A BREAKER TYPICAL)	REMOTE MIRROR RELAY/POWER WINDOW FEED
ME 14 YEL	OVERCURRENT PROTECTION (15A BREAKER TYPICAL)	AIR HORN RELAY FEED/ MARKER LAMPS RELAY FEED
MF 14 YEL	OVERCURRENT PROTECTION (15A BREAKER TYPICAL)	FOG LAMP RELAY FEED/ SPOT LAMP FEED
MG 14 WHT	GENERAL PURPOSE(RELAYS,DASH DEVICES,ETC.)	GROUND
MH 16 WHT	CHASSIS CHOKE LAMP INDICATOR CIRCUIT	CHOKE LAMP
MJ 14 YEL	CHASSIS WINDSHIELD WIPER FEED CIRCUIT	WIPER CONTROL MODULE (POWER FEED)
MK 14 YEL	CHASSIS BATTERY POWER FEED CIRCUIT	GENERAL PURPOSE(CIGAR LIGHTER, DOME/COURTESY LAMPS,ETC)
ML 16 YEL	CHASSIS INSTRUMENT PANEL LAMPS FEED CIRCUIT	INSTRUMENT PANEL LAMPS
MM 14 YEL	CHASSIS CLEARANCE LAMP CRT #1 (BRN TYPICAL)	CLEARANCE/MARKER LAMPS
MN 14 WHT	DOME LAMP SWITCHED GROUND	DOME LAMP SWITCH(DOOR JAMB, INSTRUMENT PANEL SWITCH,ETC)
MP 18/16 WHT	ELEC STEP DOOR JAMB SWITCH, LP TANK SENDER, ETC	GROUND
MR 14 YEL	REAR WINDOW WIPER SWITCH (LOW SPEED)	REAR WINDOW WIPER MOTOR (LOW SPEED)

WIRE IDENTIFICATION CHART

CODE/COLOR	FROM:	TO:
MS 14 WHT	CLEARANCE/MARKER LAMPS	GROUND
MT 8 WHT	ELECTRIC STEP	GROUND
MU 14 WHT	GENERAL PURPOSE(CIGAR LIGHTER, DOME LAMPS,12 V OUTLETS,ETC)	GROUND
MW 16 YEL	VEHICLE CHECK ENGINE LAMP CIRCUIT	CHECK ENGINE LAMP
MX 16 YEL	WINDSHIELD WIPER SWITCH	WIPER RELAY
MY 14 YEL	VEHICLE HEADLAMP FEED CIRCUIT	DIMMER MODULE
NA 14 YEL	VEHICLE HEADLAMP LOW BEAM CIRCUIT	DIMMER MODULE
NB 14 YEL	VEHICLE HEADLAMP HIGH BEAM CIRCUIT	DIMMER MODULE
NC 14 WHT	COACH LIGHTING CIRCUIT #1 (REF JC)	GROUND
ND 14 WHT	COACH LIGHTING CIRCUIT #2 (REF JD)	GROUND
NE 14 WHT	COACH LIGHTING CIRCUIT #3 (REF JE)	GROUND
NF 14 WHT	COACH LIGHTING CIRCUIT #4 (REF JF)	GROUND
NG 16 YEL	FOG LAMPS SWITCH	FOG LAMPS RELAY
NH 14 YEL	FOG LAMPS RELAY	FOG LAMPS
NJ 16 YEL	CHASSIS HORN FEED CIRCUIT	AIR HORN SWITCH
NK 14 YEL	AIR HORN SWITCH	AIR HORN AIR TANK AIR RELEASE VALVE
NL 14 YEL	AR HORN RELAY	AIR HORN AIR COMPRESSOR
NM 14 YEL	OVERCURRENT PROTECTION (15A FUSE TYPICAL)	COACH LIGHTING CIRCUIT #6 (REF PM)
NN 16 YEL	LEFT POWER MIRROR MOTOR (HORIZONTAL CONTROL,YEL)	POWER MIRROR CONTROL SWITCH

WIRE IDENTIFICATION CHART

CODE/COLOR	FROM:	TO:
NR 16 YEL	LEFT POWER MIRROR (VERTICAL CONTROL, WHT)	POWER MIRROR CONTROL SWITCH
NS 14 YEL	POWER MIRROR HEATER SWITCH	POWER MIRRORS (RED)
NT 14 YEL	POWER MIRROR RELAY	POWER MIRROR CONTROL SWITCH
NU 14 YEL	AISLE LAMPS SWITCH #1	AISLE LAMPS SWITCH #2
NW 14 YEL	FRONT COMPARTMENT LAMPS SWITCH	COMPARTMENT LAMPS
NX 14 YEL	INTERSTATE COMMERCE COMMITTEE COURTESY BLINK SWITCH	CLEARANCE LAMPS
NY 14 YEL	AISLE LAMPS SWITCH #1	AISLE LAMPS SWITCH #2
PA 14 WHT	REAR AUTO HEATER	GROUND
PB 14 WHT	REAR WINDOW WIPER MOTOR	GROUND
PC 14 YEL	BEDROOM CEILING LAMP SWITCH	BEDROOM CEILING LAMP
PD 14 YEL	MAKE UP LAMP #1 SWITCH	MAKE UP LAMP #1
PE 14 YEL	BATH CEILING LAMP SWITCH	BATH CEILING LAMP
PF 14 YEL	SHOWER LAMP SWITCH WIRE D WAS FIRST USED ON C'S	SHOWER LAMP
PG 14 YEL	WARDROBE LAMP SWITCH	WARDROBE LAMP
PH 14 YEL	AISLE LAMPS SWITCH	AISLE LAMPS
PJ 14 YEL	PORCH LAMP SWITCH	PORCH LAMP
PK 14 YEL	STRIP LAMP SWITCH	STRIP LAMP
PL 14 YEL	FRONT CEILING LAMP SWITCH	FRONT CEILING LAMP
PM 14 WHT	COACH LIGHTING CIRCUIT #6 (REF NM)	GROUND

WIRE IDENTIFICATION CHART

CODE/COLOR	FROM:	TO:
PN 16 WHT	RIGHT POWER MIRROR (COMMON,BLK)	POWER MIRROR CONTROL SWITCH
PP 16 YEL	RIGHT POWER MIRROR (HORIZONTAL CONTROL,YEL)	POWER MIRROR CONTROL SWITCH
PR 16 YEL	RIGHT POWER MIRROR (VERTICAL CONTROL,WHT)	POWER MIRROR CONTROL SWITCH
PS 14 YEL	MAP LAMP SWITCH	MAP LAMP
PT 14 YEL	BEVERAGE TRAY LAMP SWITCH	BEVERAGE TRAY LAMP
PU 14 YEL	DUMP LAMP SWITCH	DUMP LAMP
PW 14 YEL	OVERCURRENT PROTECTION (15A BREAKER TYPICAL)	POWER DOOR LOCK/UNLOCK RELAY (PIN 30)
PX 16 YEL	POWER DOOR LOCK SWITCH (LOCK) (PIN 1)	POWER DOOR LOCK RELAY (PIN 86)
PY 16 YEL	POWER DOOR LOCK SWITCH (UNLOCK) (PIN 5)	POWER DOOR UNLOCK RELAY (PIN 86)
RA 14 YEL	VEHICLE LEFT FRONT TURN SIGNAL CIRCUIT	LEFT FRONT TURN SIGNAL/MARKER LAMP
RB 14 YEL	VEHICLE RIGHT FRONT TURN SIGNAL CIRCUIT	RIGHT FRONT TURN SIGNAL/MARKER LAMP
RC 14 WHT	FRONT AUTOMOTIVE LAMPS(TURN, MARKER,ETC)	GROUND
RD 14 YEL	OVERCURRENT PROTECTION (15 A FUSE TYPICAL)	HAZARD FLASHER, HORN RELAY
RE 12 YEL	RADIATOR FAN RELAY#1 (COMMON)	RADIATOR FAN #1
RF 12 YEL	RADIATOR FAN RELAY #2 (COMMON)	RADIATOR FAN #2
RG 14 WHT	RADIATOR FAN THERMOSTAT SWITCH	RADIATOR FAN RELAYS (COILS,TRIGGER)
RH 12YEL(BLK)	OVERCURRENT PROTECTION (25A BREAKER TYPICAL)	RADIATOR FAN RELAY #1 (NORMALLY OPEN)
RJ 12YEL(BLK)	OVERCURRENT PROTECTION (25A BREAKER TYPICAL)	RADIATOR FAN RELAY #2 (NORMALLY OPEN)
RK 12 WHT	RADIATOR FAN #1	GROUND

WIRE IDENTIFICATION CHART

CODE/COLOR	FROM:	TO:
RL 12 WHT	RADIATOR FAN #2	GROUND
RM 14 WHT	VEHICLE IGNITION SWITCH GROUND DURING START CIRCUIT	BULB CHECK(LOW TAG AIR,PARK BRAKE,ETC)
RN 14 YEL	AUTOMOTIVE AIR CONDITIONER THERMOSTAT CUTOFF SWITCH	AUTOMOTIVE AIR CONDITIONER COMPRESSOR CLUTCH
RP 14 YEL	AUTOMOTIVE AIR CONDITIONER COOLANT FAN CONTROL	COOLANT FAN RELAY
RR 14 YEL	BRAKE LAMP SWITCH	TURN SIGNAL SWITCH
RS 14 YEL	HEADLAMP SWITCH INSTRUMENT PANEL LAMP FEED SWITCH	OVERCURRENT PROTECTION (5A FUSE TYPICAL)
RT 14 YEL	HORN RELAY (COMMON)	HORN
RU 14 YEL	HORN RELAY (COIL)	HORN SWITCH
RW 14 YEL	HAZARD FLASHER	TURN SIGNAL SWITCH
RX 14 YEL	EUL WARNING LAMP	EUL MODULE
RY 14 WHT	INSTRUMENT CLUSTER/ EUL MODULE	GROUND
SA 14 YEL	ENGINE WATER TEMPERATURE SENDER	ENGINE WATER TEMPERATURE GAUGE
SB 14 YEL	ENGINE OIL PRESSURE SENDER	ENGINE OIL PRESSURE GAUGE
SC 14 YEL	VEHICLE RIGHT REAR TURN SIGNAL/BRAKE LAMP CIRCUIT	RIGHT REAR TURN SIGNAL/ BRAKE LAMPS
SD 14 YEL	VEHICLE LEFT REAR TURN SIGNAL/BRAKE LAMP CIRCUIT	LEFT REAR TURN SIGNAL/ BRAKE LAMPS
SE 16YEL(WHT)	SPEED SENSOR (TWISTED PAIR)	SPEEDOMETER AND SPEED CONTROL MODULE
SF 16WHT(BLK)	SPEED SENSOR (TWISTED PAIR)	SPEEDOMETER AND SPEED CONTROL MODULE
SG 14 YEL	IGNITION SWITCH START FEED	GENERAL(NEUTRAL SAFETY SWITCH, FUEL PUMP RELAY COIL,ETC)
SH 14 YEL	IGNITION SWITCH RUN/START FEED	GENERAL(IGNITION COIL RELAY NORMALLY OPEN CONTACT,ETC)

WIRE IDENTIFICATION CHART

CODE/COLOR	FROM:	TO:
SJ 12YEL(BLK)	OVERCURRENT PROTECTION (16GA FUSELINK TYPICAL)	CHASSIS BATTERY FEED
SK 12YEL(WHT)	OVERCURRENT PROTECTION (16GA FUSELINK TYPICAL)	CHASSIS BATTERY HEADLAMP SWITCH FEED #1
SL 12YEL(BLU)	OVERCURRENT PROTECTION (16GA FUSELINK TYPICAL)	CHASSIS BATTERY IGNITION SWITCH FEED #1
SM 12YEL(BLK)	OVERCURRENT PROTECTION (16GA FUSELINK TYPICAL)	RADIATOR FAN #1 CIRCUIT BREAKER FEED
SN 12YEL(BLK)	OVERCURRENT PROTECTION (16GA FUSELINK TYPICAL)	RADIATOR FAN #2 CIRCUIT BREAKER FEED
SP 14 YEL	HEADLAMP SWITCH MARKER CIRCUIT FEED	OVERCURRENT PROTECTION (15A FUSE TYPICAL)
SR 12YEL(BRN)	IGNITION SWITCH RUN ONLY FEED	OVERCURRENT PROTECTION (15A FUSE TYPICAL)
SS 12YEL(WHT)	IGNITION SWITCH ACCESSORY FEED	OVERCURRENT PROTECTION (15A FUSE TYPICAL)
ST 14 YEL	OVERCURRENT PROTECTION (15A FUSE TYPICAL)	TURNS/BACK UP CIRCUIT FEED
SU	STARTER SOLENOID BATTERY TERMINAL	ALTERNATOR BATTERY TERMINAL
SW 14 YEL	TURN SIGNAL FLASHER	TURN SIGNAL SWITCH
SX 14 YEL	REAR WINDOW WASHER SWITCH	REAR WINDOW WASHER BOTTLE PUMP
SY 14 YEL	IGNITION COIL	TACHOMETER
TA 14 YEL	OVERCURRENT PROTECTION (15A FUSE TYPICAL)	IGNITION RUN ONLY GENERAL FEED (RADIATOR FAN RELAY COIL,ETC)
TB 12 YEL	OVERCURRENT PROTECTION (25A FUSE TYPICAL)	IGNITION RUN ONLY GENERAL FEED (AUTO AC BLOWER(NOT HIGH),ETC)
TC 14 YEL	OVERCURRENT PROTECTION (15A FUSE TYPICAL)	IGNITION RUN ONLY GENERAL FEED (DOOR LOCKS,REAR WIPER,ETC.)
TD 14 YEL	OVERCURRENT PROTECTION (15A FUSE TYPICAL)	CHASSIS BATTERY GENERAL FEED
TE 16 WHT	GENERATOR	GENERATOR LOW OIL INDICATOR LAMP
TF 16 YEL	GENERATOR	GENERATOR LOW OIL INDICATOR LAMP

WIRE IDENTIFICATION CHART

CODE/COLOR	FROM:	TO:
TG 16 YEL	TELEVISION	SPEAKER RIGHT (POSITIVE)
TH 16 WHT	TELEVISION	SPEAKER RIGHT (NEGATIVE)
TJ 16 YEL	TELEVISION	SPEAKER LEFT (POSITIVE)
TK 16 WHT	TELEVISION	SPEAKER LEFT (NEGATIVE)
TL 16 YEL	FRONT RIGHT TV SPEAKER NEGATIVE,SERIES CONNECTION	FRONT LEFT TV SPEAKER POSITIVE,SERIES CONNECTION
TM 16 WHT	STEP COVER SWITCH	STEP COVER SOLENOID MOVES STEP OUT
TN 14 YEL	STARTER SOLENOID BATTERY TERMINAL	ALTERNATOR REGULATOR
TP 14 WHT	REAR AUTOMOTIVE LAMPS(TURN, MARKER,ETC)	GROUND
TR 14 YEL	VEHICLE BACK UP CIRCUIT FEED	BACK UP LAMPS
TS 14 YEL	STARTER SOLENOID (I TERMINAL)	ENGINE WIRING (IGNITION MODULE)
TT 14 YEL	NEUTRAL SAFETY SWITCH	STARTER SOLENOID (S TERMINAL)
TU 14 WHT	IGNITION COIL RELAY (COIL)	GROUND
TW 14 YEL	IGNITION SWITCH START/RUN FEED	IGNITION COIL
TX 14 YEL	IGNITION COIL RELAY (COMMON)	IGNITION COIL
TY 14 YEL	ALTERNATOR (T TERMINAL)	CHOKE HEATER
UA 14 YEL	FUEL PUMP FUSE	OIL PRESSURE CUTOUT SWITCH/ FUEL PUMP RELAY(NO),ETC
UB 14 YEL	INERTIA SWITCH (FUEL PUMP SHUTOFF)	FUEL PUMP RELAY (NORMALLY CLOSED)
UC 14 YEL	FUEL PUMP RELAY (COMMON)	FUEL PUMP
UD 16 WHT	FUEL GAUGE	FUEL SENDER

WIRE IDENTIFICATION CHART

CODE/COLOR	FROM:	TO:
UE 14 YEL	INERTIA SWITCH (FUEL PUMP SHUTOFF)	OIL PRESSURE CUTOFF SWITCH
UF 14 WHT	FUEL PUMP	GROUND
UG 14 WHT	FUEL PUMP RELAY (COIL)	GROUND
UH 16 YEL	LP DETECTOR (SHUTOFF SYSTEM,YEL)	LP SAFETY VALVE
UJ 16 YEL	LP DETECTOR (SHUTOFF SYSTEM,YEL)	LP SAFETY SWITCH
UK 16 WHT	LP DETECTOR (BLK)(REF WB)	GROUND
UL 16 WHT	EUL LAMP	EUL MODULE
UM 16 WHT	DOOR JAMB DOME LAMP SWITCH	GROUND
UN 16 WHT	SEAT BELT LAMP	EUL MODULE
UP 16 YEL	SEAT BELT LAMP	SEAT BELT BUZZER
UR 16 WHT	PARK BRAKE SWITCH	PARK BRAKE LAMP
US 16 YEL	OVERCURRENT PROTECTION (6A BREAKER TYPICAL)	COACH BATTERY FEED TO BATTERY CONDITION SWITCH
UT 14 YEL	DOOR JAMB DOME LAMP SWITCH (SWITCH POSITIVE)	DOME LAMP
UU 16 YEL	WATER HEATER	VACUUM VALVE SOLENOID
UW 16 WHT	VACUUM VALVE SOLENOID	GROUND
UX 16 YEL	LP DETECTOR #2 (SHUTOFF SYSTEM,YEL)	LP SAFETY VALVE
UY 16 YEL	LP DETECTOR #2 (SHUTOFF SYSTEM,YEL)	LP SAFETY VALVE
WA 14 YEL	EXTERIOR SERVICE LAMP SWITCH	EXTERIOR SERVICE LAMP
WB 16 YEL	OVERCURRENT PROTECTION (6A BREAKER TYPICAL)	LP DETECTOR (REF UK)

WIRE IDENTIFICATION CHART

CODE/COLOR	FROM:	TO:
WC 14 YEL	DDVRCURRENT PROTECTION (15A BREAKER TYPICAL)	COMPARTMENT LAMPS (REF WE)
WD 14 WHT	AISLE LAMPS	GROUND
WE 14 WHT	COMPARTMENT LAMPS (REF WC)	GROUND
WF 12YEL(WHT)	OVERCURRENT PROTECTION (30A BREAKER TYPICAL)	PARK BRAKE COMPRESSOR SOENOID
WG 12YEL(BLK)	OVERCURRENT PROTECTION (30A BREAKER TYPICAL)	IGNITION RELAY
WH 14 YEL	OVERCURRENT PROTECTION (15A BREAKER TYPICAL)	IGNITION SWITCH RUN ONLY FEED
WJ 12 YEL	OVERCURRENT PROTECTION (20A BREAKER TYPICAL)	IGNITION SWITCH ACCESSORY FEED RELAY
WK 14 YEL	OVERCURRENT PROTECTION (15A BREAKER TYPICAL)	IGNITION SWITCH ACCESSORY FEED
WL 14 YEL	POWER DOOR LOCK RELAY (PIN 30)	POWER DOOR LOCK MOTOR(S) (LOCK)
WM 14 WHT	POWER DOOR UNLOCK RELAY (PIN 30)	POWER DOOR LOCK MOTOR(S) (UNLOCK)
WN 16 YEL	RADIO POWER SWITCH (ACCESSORY POWER)	DASH RADIO (ACCESSORY POWER)
WP 10 YEL	OVERCURRENT PROTECTION (25A BREAKER TYPICAL)	FRONT PANEL LOADS(INVERTER, RADIO)(96 M-SERIES)
WR 14 YEL	OVERCURRENT PROTENTION (15A BREAKER TYPICAL)	POWER SEAT LIFT SWITCH
WS 14 WHT	POWER SEAT LIFT SWITCH	GROUND
WT 14 YEL	POWER SEAT LIFT SWITCH (UP)	MOTOR (POSITIVE UP)
WU 14 WHT	POWER SEAT LIFT SWITCH (DOWN)	MOTOR (POSITIVE DOWN)
WW 14 WHT	SPOT LAMP SWITCH	GROUND
WX 14 YEL	HALLWAY CEILING LAMP SWITCH	HALLWAY CEILING LAMP
WY 10 WHT	AUTOMOTIVE AIR CONDITIONER MOTOR	GROUND

WIRE IDENTIFICATION CHART

CODE/COLOR	FROM:	TO:
XA 12/10 YEL	VEHICLE AUTOMOTIVE AIR FEED CIRCUIT	AUTOMOTIVE AIR CONDITIONER BLOWER (USE 10 IF OVER 6')
XB 14 YEL	DRIVER'S DOOR POWER WINDOW SWITCH(PIN 5)	DRIVER'S DOOR POWER WINDOW MOTOR(POSITIVE UP)
XC 14 WHT	DRIVER'S DOOR POWER WINDOW SWITCH(PIN 1)	DRIVER'S DOOR POWER WINDOW MOTOR(POSITIVE DOWN)
XD 16 WHT	MONITOR PANEL	HOLDING TANK LEVEL SENSOR (FULL)
XE 16 WHT	MONITOR PANEL	HOLDING TANK LEVEL SENSOR (3/4)
XF 16 WHT	MONITOR PANEL	HOLDING TANK LEVEL SENSOR (1/2)
XG 16 WHT	MONITOR PANEL	HOLDING TANK LEVEL SENSOR (1/4)
XH 16 YEL	MONITOR PANEL	WATER TANK LEVEL SENSOR
XJ 16 YEL	MONITOR PANEL	BLACK HOLDING LEVEL SENSOR (MAIN TANK)
XK 16 YEL	MONITOR PANEL	GRAY AUXILIARY HOLDING TANK #1 LEVEL SENSOR (AUX TANK #1)
XL 16 YEL	MONITOR PANEL	GRAY AUXILIARY HOLDING TANK #2 LEVEL SENSOR (AUX TANK #2)
XM 14 YEL	OVERCURRENT PROTECTION (18GA FUSELINK TYPICAL)	IGNITION START RELAY
XN 16 YEL	FRONT ROOF AIR CONDITIONER (EXHAUST)	THERMOSTAT (EX TERMINAL)
XP 16 YEL	FRONT ROOF AIR CONDITIONER (COOL)	THERMOSTAT (Y TERMINAL)(Y EXPORT AIR)
XR 16 YEL	FRONT ROOF AIR CONDITIONER (HIGH SPEED BLOWER)	THERMOSTAT (GH TERMINAL)(H EXPORT AIR)
XS 16 YEL	FRONT ROOF AIR CONDITIONER (LOW SPEED BLOWER)	THERMOSTAT (GL TERMINAL)(G EXPORT AIR)
XT 14 YEL	IGNITION START RELAY #1 (NORMALLY CLOSED CONTACT)	IGNITION START RELAY #2 (COMMON CONTACT)
XU 14 YEL	DINETTE OVHD LAMP SWITCH	DINETTE OVHD LAMP
XW 14 WHT	IGNITION SWITCH ACCESSORY FEED RELAY CIRCUIT	GROUND

WIRE IDENTIFICATION CHART

CODE/COLOR	FROM:	TO:
XX 14 YEL	GALLEY LAMP SWITCH	GALLEY LAMP
XY 14 YEL	MAKE UP LAMP #2 SWITCH	MAKE UP LAMP #2
YA 14 YEL	TAG AXLE PRESSURE CONTROL SWITCH	COMPRESSOR SOLENOID/ SOLENOID AIR VALVE
YB 14 WHT	LOW AIR PRESSURE SWITCH	GROUND
YC 10YEL(BLU)	OVERCURRENT PROTECTION (30A BREAKER TYPICAL)	TAG AXLE COMPRESSOR SOLENOID
YD 14 WHT	TAG AXLE MOUNTING PLATE SCREW	GROUND
YE 10 WHT	TAG AXLE COMPRESSOR	GROUND
YF 12 WHT	TAG AXLE BRAKE CONTROL MODULE/BRAKE MAGNET	GROUND
YG 12YEL(BLK)	OVERCURRENT PROTECTION (20A BREAKER TYPICAL)	TAG AXLE BRAKE CONTROL MODULE
YH 12YEL(BLU)	TAG AXLE BRAKE CONTROL MODULE	TAG AXLE BRAKE MAGNET
YJ 10YEL(WHT)	TAG AXLE COMPRESSOR SOLENOID	TAG AXLE COMPRESSOR
YK 14 YEL	BEDROOM CEILING LAMP SWITCH#1 (2 SWITCH SYSTEM)	BEDROOM CEILING LAMP SWITCH #2 (2 SWITCH SYSTEM)
YL 14 YEL	BEDROOM CEILING LAMP SWITCH #1 (2 SWITCH SYSTEM)	BEDROOM CEILING LAMP SWITCH #2 (2 SWITCH SYSTEM)
YM 14 YEL	HALLWAY CEILING LAMP SWITCH #1 (2 SWITCH SYSTEM)	HALLWAY CEILING LAMP SWITCH #2 (2 SWITCH SYSTEM)
YN 14 YEL	HALLWAY CEILING LAMP SWITCH #1 (2 SWITCH SYSTEM)	HALLWAY CEILING LAMP SWITCH #2 (2 SWITCH SYSTEM)
YP 14 YEL	VALANCE LAMP SWITCH #1 (3 WAY SWITCH)	VALANCE LAMP SWITCH #2 (3 WAY SWITCH)
YR 14 YEL	VALANCE LAMP SWITCH #1 (3 WAY SWITCH)	VALANCE LAMP SWITCH #2 (3 WAY SWITCH)
YS 14 YEL	VALANCE LAMP SWITCH	VALANCE LAMP
YT 14 YEL	FRONT VALANCE LAMP SWITCH	FRONT VALANCE LAMP

WIRE IDENTIFICATION CHART

CODE/COLOR	FROM:	TO:
YU 14 YEL	REAR VALANCE LAMP SWITCH	REAR VALANCE LAMP
YW 14 WHT	DOOR BELL SWITCH	DOOR BELL
YX 14 YEL	IGNITION SWITCH RUN/START FEED	ALTERNATOR WARNING LAMP
YY 14 YEL	ALTERNATOR VOLTAGE REGULATOR	ALTERNATOR WARNING LAMP
AAA 16 WHT	STEP COVER SWITCH (REF GX)	STEP COVER SOLENOID MOVES STEP IN
AAB 14 YEL	DINETTE READING LAMPS	DINETTE READING LAMP SWITCH
AAC 14 YEL	LOUNGE READING LAMPS	LOUNGE READING LAMP SWITCH
AAD 14 YEL	FORD CHASSIS TRAILER MARKER LAMP CIRCUIT (BR/WHT)	TRAILER CONNECTOR SOCKET MARKER LAMPS
AAE 14 YEL	FORD CHASSIS TRAILER BACKUP LAMP CIRCUIT (BLK/LT GRN)	TRAILER CONNECTOR SOCKET BACKUP LAMPS
AAF 14 YEL	FORD CHASSIS TRAILER LEFT TURN/BRAKE LAMP CIRCUIT (YEL)	TRAILER CONNECTOR SOCKET LEFT TURN/BRAKE LAMP
AAG 14 YEL	FORD CHASSIS TRAILER RIGHT TURN/BRAKE LAMP CIRCUIT (DKG)	TRAILER CONNECTOR SOCKET RIGHT TURN/BRAKE LAMP
AAH 14 YEL	BATH-VENT,POWER	BATH-VENT, THERMOSTAT
AAJ 14 YEL	BATH-VENT,POWER	BATH-VENT, THERMOSTAT
AAK 16 WHT	SWITCH-WATER PUMP (MULTIPLEX SYSTEM)	LATCHING RELAY (WITH 4 OR MORE SWITCHES)
AAL 16 WHT	SWITCH-WATER PUMP (MULTIPLEX SYSTEM)	GROUND
AAM 14 YEL	CHASSIS SUPPLIED WIRE ASM (DARK BLUE)(GM)	RIGHT TAIL LAMP PARK (WIE)
AAN 14 YEL	CHASSIS SUPPLIED WIRE ASM (PURPLE) (GM)	LEFT TAIL LAMP PARK (WIE)
AAP 10 YEL	55 AMP BREAKER JUMPER WIRE	30 AMP BREAKER
AAR 14 YEL	TV/RADIO SPEAKER FEED SELECTOR SWITCH	TV SPEAKER AMPLIFIER

WIRE IDENTIFICATION CHART

CODE/COLOR	FROM:	TO:
AAS 16 YEL	SPEAKER (NEGATIVE) SPEAKERS IN SERIES	SPEAKER (POSITIVE)
AAT 16 YEL	AMPLIFIER POSITIVE OUT (AAU NEGATIVE)	FRONT WOOFER (WITH DELUXE SOUND SYSTEM)
AAU 16 WHT	AMPLIFIER NEGATIVE OUT (AAT POSITIVE)	FRONT WOOFER (WITH DELUXE SOUND SYSTEM)
AAW 16 YEL	AMPLIFIER POSITIVE OUT (AAX NEGATIVE)	REAR WOOFER (WITH DELUXE SOUND SYSTEM)
AAX 16 WHT	AMPLIFIER NEGATIVE OUT (AAW POSITIVE)	REAR WOOFER (WITH DELUXE SOUND SYSTEM)
AAY 12 YEL	SLIDEOUT ROOM CONTROL SWITCH (RAM #1)	SLIDEOUT DRIVE MOTOR LEAD #1
AAZ 12 YEL	SLIDEOUT ROOM CONTROL SWITCH (RAM #1)	SLIDEOUT DRIVE MOTOR LEAD #2
BBA 16 WHT	SLIDEOUT WIRING (PARK BRAKE SW)(SWITCHED GRD)	SLIDEOUT ROOM RELAY (GROUND TERMINAL)
BBB 16 YEL	SLIDEOUT ROOM CIRCUIT BREAKER (6 AMP)	SLIDEOUT ROOM RELAY (PIN 86 & 87)
BBC 16 YEL	LOAD SHEDDER MONITOR PANEL (RED WIRE)	LOAD SHEDDER CONTROL BOARD (RED WIRE)
BBD 16 YEL	LOAD SHEDDER MONITOR PANEL (BLUE WIRE)	LOAD SHEDDER CONTROL BOARD (BLUE WIRE)
BBE 16 YEL	LOAD SHEDDER MONITOR PANEL (BLACK WIRE)	LOAD SHEDDER CONTROL BOARD (BLACK WIRE)
BBF 16 YEL	LOAD SHEDDER MONITOR PANEL (GRAY WIRE)	LOAD SHEDDER CONTROL BOARD (GRAY WIRE)
BBG 14 YEL	DINETTE CEILING LAMP SWITCH	DINETTE CEILING LAMP
BBH 16 YEL	REAR COMPRESSOR SIGNAL REAR THERMOSTAT	LOAD SHEDDER CONTROL BOARD
BBJ 16 YEL	LOAD SHEDDER CONTROL BOARD	REAR A/C (COOL)
BBK 12 WHT	JET AIR/TAG AXLE WIRING	GROUND, CHASSIS
BBL 14 YEL	OVHD SWITCH	OVHD HALOGEN LAMPS
BBM 16 YEL	SLIDEOUT ROOM SWITCH (ROOM TWO EXTEND)	HWH WIRING (ROOM TWO EXTEND)

WIRE IDENTIFICATION CHART

CODE/COLOR	FROM:	TO:
BBN 16 YEL	SLIDEOUT ROOM SWITCH (ROOM TWO RETRACT)	HWH WIRING (ROOM TWO RETRACT)
BBP 14 YEL	ICC COURTESY BLINK SWITCH	ICC COURTESY BLINK RELAY
BBR 14 YEL	ICC COURTESY BLINK RELAY	CLEARANCE LAMPS
BBS 14 YEL	CHASSIS FUSE PANEL	ICC COURTESY BLINK RELAY
BBT 14 YEL	DOCKING LAMP SWITCH TRIGGER RELAY	DOCKING LAMP SWITCH
BBU 12 YEL	DOCKING LAMP CIRCUIT BREAKER	DOCKING LAMP RELAY
BBW 14 YEL	VEHICLE LEFT HEADLAMP LOW BEAM CIRCUIT	LEFT LOW BEAM LAMP
BBX 14 YEL	VEHICLE RIGHT HEADLAMP LOW BEAM CIRCUIT	RIGHT LOW BEAM LAMP
BBY 14 YEL	SWITCH-MONITOR PANEL (IN EXT. WATER CENTER)	EXTERIOR MONITOR PANEL (IN EXT. WATER CENTER)
BBZ 14 YEL	OVERCURRENT PROTECTION (15A FUSE/BREAKER TYPICAL)	AUXILIARY FURNACE (CCA)
CCA 14 WHT	AUXILIARY FURNACE	GROUND
CCB 16 YEL	EXTERIOR MONITOR PANEL	WATER TANK LEVEL SENSOR
CCC 16 YEL	EXTERIOR MONITOR PANEL	MAIN HOLDING TANK LEVEL SENSOR
CCD 16 YEL	EXTERIOR MONITOR PANEL	AUX HOLDING TANK LEVEL SENSOR
CCE 14 YEL	COMPARTMENT LAMP SWITCH	COMPARTMENT LAMP
CCF 14 YEL	COMPARTMENT LAMP SWITCH	COMPARTMENT LAMP
CCG 14 YEL	COMPARTMENT LAMP SWITCH	COMPARTMENT LAMP
CCH 14 YEL	COMPARTMENT LAMP SWITCH	COMPARTMENT LAMP
CCJ 14 YEL	COMPARTMENT LAMP SWITCH	COMPARTMENT LAMP

WIRE IDENTIFICATION CHART

CODE/COLOR	FROM:	TO:
CCK 14 YEL	COMPARTMENT LAMP SWITCH	COMPARTMENT LAMP
CCL 14 YEL	COMPARTMENT LAMP SWITCH	COMPARTMENT LAMP
CCM 14 YEL	COMPARTMENT LAMP SWITCH	COMPARTMENT LAMP
CCN 16 YEL	THERMOSTATE LOW SPEED FAN SIGNAL	CENTRAL AIR AND LOAD SHEDDER
CCP 16 YEL	LOAD SHEDDER COMPRESSOR TWO CONTROL RELAY	CENTRAL A/C COMPRESSOR TWO
CCR 14 YEL	SWITCH-MONITOR PANEL (IN EXT. WATER CENTER)	EXTERIOR MONITOR PANEL (IN EXT. WATER CENTER)
CCS 16 YEL	NOISE FILTER	RADIO POWER INPUT
CCT 16 YEL	REAR RIGHT TV SPEAKER NEGATIVE,SERIES CONNECTION	REAR LEFT TV SPEAKER POSITIVE,SERIES CONNECTION
CCU 16 YEL	GM DOME LAMP POWER	DOME LAMP
CCW 12 YEL	DUAL MODE SOLENOID (CHASSIS SIDE)	FUSE HOLDER (30 AMP)
CCX 16 YEL	ORG WIRE ON AIR COMPRESSOR	AIR PRESSURE SWITCH ON AIR TANK
CCY 16 YEL	HWH WIRING (BATTERY POWER)	SLIDEOUT ROOM SWITCH (POSITIVE)
CCZ 16 YEL	HWH WIRING (SWITCHED BATTERY POWER)	SLIDEOUT ROOM #1 SWITCH (POSITIVE)
DDA 16 YEL	HWH WIRING (PUMP RELAY CONTROL)	SLIDEOUT ROOM SWITCH (POSITIVE)
DDB 14 YEL	REAR AUTO HEATER CIRCUIT BREAKER	REAR AUTO HEATER RELAY (POWER)
DDC 14 YEL	REAR AUTO HEATER RELAY (SWITCHED POWER)	REAR AUTO HEATER SWITCH (COMMON TERMINAL)
DDD 14 YEL	MODULE-CHARGE CONTROL RELAY OUTPUT	AUX-START SOLENOID RELAY
DDE 14 YEL	AUX-START SOLENOID RELAY	AUX-START SOLENOID
DDF 10 YEL	HEATER BLOWER CIRCUIT BREAKER	HEATER BLOWER RELAY

WIRE IDENTIFICATION CHART

CODE/COLOR	FROM:	TO:
DDG 10 YEL	CIRCUIT BREAKER BUSS BAR	CHASSIS BATTERY FEED CIRCUIT BREAKER
DDH 14 YEL	FREIGHTLINER RUN ONLY TRIGGER CIRCUIT	HEATER BLOWER RELAY
DDJ 16 WHT	CHASSIS PARKING BRAKE TRIGGER CIRCUIT	LEVELING SYSTEM PARKING BRAKE SENSOR WIRE
DDK 16 YEL	HWH WIRING (PUMP RELAY CONTROL)	REAR SLIDEOUT ROOM SWITCH (POSITIVE)
DDL 14 WHT	FRONT LEFT AUTOMOTIVE LAMPS	GROUND
DDM 14 WHT	FRONT RIGHT AUTOMOTIVE LAMPS	GROUND
DDN 16 YEL	TIMER MODULE	CHECK ANTENNA LIGHT
DDP 12 YEL	OVERCURRENT PROTECTION (20A BREAKER TYPICAL)	INVERTER FEED (INVERTER NUMBER 2)
DDR 12 WHT	INVERTER (INVERTER NUMBER 2)	GROUND
DDS 12 WHT	INVERTER CHASSIS (INVERTER NUMBER 2)	GROUND
DDT 12 YEL	POWER COMPT DOOR LOCK RELAY (RIGHT SIDE)	POWER COMPT DOOR LOCK MOTOR(S) (RIGHT SIDE)
DDU 12 WHT	POWER COMPT DOOR UNLOCK RELAY (RIGHT SIDE)	POWER COMPT LOCK MOTOR(S) (UNLOCK) (RIGHT SIDE)
DDV 12 YEL	POWER COMPT DOOR LOCK RELAY (LEFT SIDE)	POWER COMPT LOCK MOTOR(S) (LOCK) (LEFT SIDE)
DDW 12 WHT	POWER COMPT DOOR UNLOCK RELAY (LEFT SIDE)	POWER COMPT LOCK MOTOR(S) (UNLOCK) (LEFT SIDE)
DDX 12 YEL	OVERCURRENT PROTECTION (20A BREAKER TYPICAL)	POWER COMPT DOOR LOCK/ UNLOCK RELAY (RIGHT SIDE)
DDY 12 YEL	OVERCURRENT PROTECTION (20A BREAKER TYPICAL)	POWER COMPT DOOR LOCK/ UNLOCK RELAY (LEFT SIDE)
DDZ 12 YEL	POWER COMPT DOOR LOCK SWITCH (LOCK) (PIN 1)	POWER COMPT DOOR LOCK RELAY (PIN 86)
EEA 12 WHT	POWER COMPT DOOR LOCK SWITCH (UNLOCK) (PIN 5)	POWER COMPT DOOR UNLOCK RELAY (PIN 86)
EEB 12 WHT	POWER COMPT DOOR LOCK RELAYS (LEFT SIDE)	GROUND

WIRE IDENTIFICATION CHART

CODE/COLOR	FROM:	TO:
EEC 12 YEL	25 AMP BREAKER IN 12 VOLT PANEL	SOFA RECLINER SWITCH SOFA 4-WAY RECLINER
EED 12 WHT	SOFA RECLINER SWITCH SOFA 4-WAY RECLINER	GROUND
EEE 14 YEL	OVERCURRENT PROTECTION (15A BREAKER TYPICAL)	12V POWER JACK
EEF 14 WHT	12V POWER JACK	GROUND
EEG 12 WHT	POWER COMPT DOOR LOCK RELAYS (RIGHT SIDE)	GROUND
EEH 12 YEL	SOFA RECLINER SWITCH EXTEND	SOFA RECLINER MOTOR SOFA 4-WAY
EEJ 12 YEL	SOFA RECLINER SWITCH RETRACT	SOFA RECLINER MOTOR SOFA 4-WAY
EEK 18 YEL	AUDIO AMPLIFIER	LH FRT SPKR (+)
EEL 18 WHT	AUDIO AMPLIFIER	LH FRT SPKR (-)
EEM 18 YEL	AUDIO AMPLIFIER	RH FRT SPKR (+)
EEN 18 WHT	AUDIO AMPLIFIER	RH FRT SPKR (-)
EEP 18 YEL	AUDIO AMPLIFIER	LH RR SPKR (+)
EER 18 WHT	AUDIO AMPLIFIER	LH RR SPKR (-)
EES 18 YEL	AUDIO AMPLIFIER	RH RR SPKR (+)
EET 18 WHT	AUDIO AMPLIFIER	RH RR SPKR (-)
EEU 18 YEL	AUDIO AMPLIFIER	CTR CHANNEL SPKR (+)
EEW 18 WHT	AUDIO AMPLIFIER	CTR CHANNEL SPKR (-)
EEX 12/10 YEL	PASSENGER AUTO A/C FEED CIRCUIT	PASSENGER AUTO A/C BLOWER (USE 10 IF OVER 6')
EEY 10 WHT	PASSENGER AUTO A/C MOTOR	GROUND

WIRE IDENTIFICATION CHART

CODE/COLOR	FROM:	TO:
EEZ 12/10 YEL	OVERCURRENT PROTECTION (30A BREAKER TYPICAL)	PASSENGER HI-SPEED HEATER FAN (USER 10 IF OVER 6')
FFA 10 YEL	PASSENGER HEATER BLOWER CIRCUIT BREAKER	PASSENGER HEATER BLOWER RELAY
FFB 10 YEL	OVERCURRENT PORTECTION (30A BREAKER TYPICAL)	POWER LOUNGE CHAIR
FFC 10 WHT	POWER LOUNGE CHAIR	GROUND
FFD 12 YEL	OVERCURRENT PROTECTION (30A BREAKER TYPICAL)	AWNING CONTROL BOX (12V POSITIVE)
FFE 12 WHT	AWNING CONTROL BOX	GROUND
FFF 12 YEL	AWNING CONTROL BOX	DOOR AWNING (MOTOR POSITIVE)
FFG 12 WHT	DOOR AWNING (MOTOR GROUND)	AWNING CONTROL BOX
FFH 12 YEL	AWNING CONTROL BOX	PATIO AWNING (MOTOR POSITIVE)
FFJ 12 WHT	PATIO AWNING (MOTOR GROUND)	AWNING CONTROL BOX
FFK 16 YEL	AWNING CONTROL BOX	DOOR AWNING SWITCH (EXTEND)
FFL 16 YEL	DOOR AWNING SWITCH (COMMON)	AWNING CONTROL BOX
FFM 16 YEL	AWNING CONTROL BOX	DOOR AWNING SWITCH (RETRACT)
FFN 16 YEL	AWNING CONTROL BOX	PATIO AWNING SWITCH (EXTEND)
FFP 16 YEL	PATIO AWNING SWITCH (COMMON)	AWNING CONTOL BOX
FFR 16 YEL	AWNING CONTOL BOX	PATIO AWNING SWITCH (RETRACT)
FFS 14 WHT	RELAY (PIN 30)	AWNING CONTROL BOX
FFT 14 WHT	PATIO AWNING SWITCH	AWNING CONTROL BOX
FFU 16 YEL	AWNING SELECTOR SWITCH (DOOR AWNING)	AWNING CONTROL SWITCH (DOOR AWNING)

WIRE IDENTIFICATION CHART

CODE/COLOR	FROM:	TO:
FFV 16 YEL	AWNING SELECTOR SWITCH (PATIO AWNING)	AWNING CONTROL SWITCH (PATIO AWNING)
FFW 14 YEL	LOUNGE LAMPS SWITCH #1	LOUNGE LAMPS SWITCH #2
FFX 14 YEL	LOUNGE LAMPS SWITCH #1	LOUNGE LAMPS SWITCH #2
FFY 14 YEL	CEILING FAN SWITCH	CEILING FAN
FFZ 14 YEL	OVERCURRENT PROTECTION (15A FUSE/BREAKER TYPICAL)	COACH LIGHTING,ETC CIRCUIT #7 (REF GGA)
GGA 14 WHT	COACH LIGHTING (REF-FFZ)	GROUND
GGB 14 YEL	POWER LIFT VENT	POWER LIFT SWITCH (UP)
GGC 14 YEL	POWER LIFT VENT	POWER LIFT SWITCH (DOWN)
GGD 16 YEL	CONTROL MODULE (LEFT FRONT SLIDE)(STOP)	SLIDEOUT SWITCH (LEFT FRONT SLIDE)
GGE 16 YEL	CONTROL MODULE (LEFT FRONT SLIDE)(GREEN LED)	SLIDEOUT SWITCH (LEFT FRONT SLIDE)
GGF 16 YEL	CONTROL MODULE (LEFT FRONT SLIDE)(RED LED)	SLIDEOUT SWITCH (LEFT FRONT SLIDE)
GGG 16 YEL	CONTROL MODULE (LEFT FRONT SLIDE)(SIGNAL)	LEFT FRONT SLIDE,FRONT RAM (ENCODER)
GGH 16 YEL	CONTROL MODULE (LEFT FRONT SLIDE)(+)	LEFT FRONT SLIDE,FRONT RAM (ENCODER)
GGJ 16 WHT	CONTROL MODULE (LEFT FRONT SLIDE)(-)	LEFT FRONT SLIDE,FRONT RAM (ENCODER)
GGK 16 YEL	CONTROL MODULE (LEFT FRONT SLIDE)(SIGNAL)	LEFT FRONT SLIDE,REAR RAM (ENCODER)
GGL 16 YEL	CONTROL MODULE (LEFT FRONT SLIDE)(+)	LEFT FRONT SLIDE,REAR RAM (ENCODER)
GGM 16 WHT	CONTROL MODULE (LEFT FRONT SLIDE)(-)	LEFT FRONT SLIDE,REAR RAM (ENCODER)
GGN 12 YEL	CONTROL MODULE (RAM #2)	SLIDEOUT ACTUATOR DRIVE LEAD #1
GGP 12 YEL	CONTROL MODULE (RAM #2)	SLIDEOUT ACTUATOR DRIVE LEAD #2

WIRE IDENTIFICATION CHART

CODE/COLOR	FROM:	TO:
GGR 16 YEL	FRONT ROOF HEAT PUMP	THERMOSTAT (W TERMINAL)
GGS 16 YEL	REAR ROOF HEAT PUMP	THERMOSTAT (W TERMINAL)
GGT 12 YEL	SOFA RECLINER SWITCH EXTEND	SOFA RECLINER MOTOR SOFA 4-WAY
GGU 12 YEL	SOFA RECLINER SWITCH RETRACT	SOFA RECLINER MOTOR SOFA 4-WAY
GGV 14 WHT	GPS (BLACK WIRE)	GROUND
GGW 16 YEL	GPS (GREEN/WHITE WIRE)	VEHICLE SPEED SENSOR (CHASSIS SUPPLIED)
GGX 14 YEL	10 OHM RESISTOR *	BEDROOM CEILING FAN (LOW SPEED)
GGY 14 YEL	BATHROOM VENT SWITCH	BATHROOM VENT
GGZ 14 YEL	BEDROOM VENT SWITCH	BEDROOM VENT
HHA 14 YEL	OVERCURRENT PROTECTION (15A FUSE/BREAKER TYPICAL)	COACH VENTS/LAMPS (REF HHB)
HHB 14 WHT	COACH VENTS/LAMPS (REF HHA)	GROUND
HHC 12 YEL	STEP COVER SWITCH	STEP COVER MOTOR (+)RETRACT,(-)EXTEND
HHD 12 YEL	STEP COVER SWITCH	STEP COVER MOTOR (-)EXTEND,(+)RETRACT
HHE 16 YEL	SLIDEOUT ROOM SWITCH (ROOM THREE EXTEND)	HWH WIRING (ROOM THREE EXTEND)
HHF 16 YEL	SLIDEOUT ROOM SWITCH (ROOM THREE RETRACT)	HWH WIRING (ROOM THREE RETRACT)
HHG 16 YEL	SLIDEOUT ROOM SWITCH (ROOM FOUR EXTEND)	HWH WIRING (ROOM FOUR EXTEND)
HHH 16 YEL	SLIDEOUT ROOM SWITCH (ROOM FOUR RETRACT)	SLIDEOUT ROOM SWITCH (ROOM FOUR RETRACT)
HHJ 14 YEL	110V WATER HEATER TRIGGER SWITCH	WATER HEATER RELAY
HHK 14 YEL	DRIVER'S POWER SUNVISOR SWITCH	DRIVER'S POWER SUNVISOR

WIRE IDENTIFICATION CHART

CODE/COLOR	FROM:	TO:
HHL 14 YEL	DRIVER'S POWER SUNVISOR SWITCH	DRIVER'S POWER SUNVISOR
HHM 14 YEL	PASS POWER SUNVISOR SWITCH	PASS POWER SUNVISOR
HHN 14 YEL	PASS POWER SUNVISOR SWITCH	PASS POWER SUNVISOR
HHP 14 YEL	HOT WATER HEAT CONTROL BOARD (F1)	ZONE 1 FAN SPEED SWITCH
HHR 14 YEL	ZONE 1 FAN SPEED SWITCH	ZONE 1 HEATER FAN
HHS 16 YEL	HOT WATER HEAT CONTROL BOARD (TC)	ZONE 2 & 3 THERMOSTAT
HHT 16 YEL	HOT WATER HEAT CONTROL BOARD (T2)	ZONE 2 THERMOSTAT
HHU 14 YEL	HOT WATER HEAT CONTROL BOARD (F2)	ZONE 2 FAN SPEED SWITCH
HHV 14 YEL	ZONE 2 FAN SPEED SWITCH	ZONE 2 HEATER FAN
HHW 16 YEL	HOT WATER HEAT CONTROL BOARD (T3)	ZONE 3 THERMOSTAT
HHX 14 YEL	HOT WATER HEAT CONTROL BOARD (F3)	ZONE 3 HEATER FAN
HHY 16 WHT	AWNING CONTROL BOX	WIND SENSOR (NEGATIVE)
HHZ 16 YEL	AWNING CONTROL BOX	WIND SENSOR (POSITIVE)
JJA 16 YEL	AWNING CONTROL BOX	WIND SENSOR TEMPERATURE OUTPUT
JJB 16 YEL	AWNING CONTROL BOX	WIND SENSOR SPEED OUTPUT
JJC 14 YEL	ENGINE HEATER CIRCULATING PUMP SWITCH	HOT WATER HEAT CONTROL PANEL (BLU/BLK WIRE)
JJD 10 YEL	OVERCURRENT PROTECTION (25 FUSE TYPICAL)	HOT WATER HEAT CONTROL BOARD
JJE 10 WHT	HOT WATER HEAT CONTROL BOARD	GROUND
JJF 14 YEL	SATELLITE POWER SWITCH	SATELLITE-AUTO SEEK

WIRE IDENTIFICATION CHART

CODE/COLOR	FROM:	TO:
JJG 12 YEL	OVERCURRENT PROTECTION (20 AMP BREAKER TYPICAL)	SLIDEOUT ROOM CONTROL SWITCH (RAM #3)
JJH 12 WHT	SLIDEOUT ROOM CONTROL SWITCH (RAM #3)	GROUND
JJJ 12 YEL	SLIDEOUT ROOM CONTROL SWITCH (RAM #3)	SLIDEOUT DRIVE MOTOR LEAD #1
JJK 12 YEL	SLIDEOUT ROOM CONTROL SWITCH (RAM #3)	SLIDEOUT DRIVE MOTOR LEAD #2
JJL 12 YEL	OVERCURRENT PROTECTION (20 AMP BREAKER TYPICAL)	SLIDEOUT ROOM CONTROL SWITCH (RAM #2)
JJM 16 YEL	HWH WIRING (SWITCHED BATTERY POWER)	SLIDEOUT ROOM SWITCH #2 (SWITCHED EXTEND/RETRACT PWR)
JJN 16 YEL	HWH WIRING (SWITCHED BATTERY POWER)	SLIDEOUT ROOM SWITCH #3 (SWITCHED EXTEND/RETRACT PWR)
JJP 16 YEL	HWH WIRING (SWITCHED BATTERY POWER)	SLIDEOUT ROOM SWITCH #4 (SWITCHED EXTEND/RETRACT PWR)
JJR 16 YEL	REMOTE SWITCH (EXTEND)	PATIO AWNING CONTROL MODULE (RELAY POSITION 87A,EXTEND)
JJS 12 YEL	REMOTE SWITCH	DOOR AWNING CONTROL RELAY (RELAY POSITION 87A,EXTEND)
JJT 14 YEL	OVERCURRENT PROTECTION (15A FUSE/BREAKER TYPICAL)	COACH 12V RECEPTACLES (REF JJU)
JJU 14 WHT	COACH 12V RECEPTACLES (REF JJT)	GROUND
JJV 14 YEL	MONITOR PANEL LAMP SWITCH	MONITOR PANEL LAMP
JJW 14 YEL	RUN ONLY POWER BREAKER	RUN ONLY POWER RELAY
JJX 14 YEL	RUN ONLY POWER RELAY	GENERAL PURPOSE (RUN ONLY FEED)
JJY 14 YEL	RUN/ACC POWER #1 BREAKER	RUN/ACC POWER #1 RELAY
JJZ 14 YEL	RUN/ACC POWER #1 RELAY (REF LLD)	GENERAL PURPOSE (RUN/ACC FEED #1)
KKA 14 YEL	RUN/ACC POWER #2 BREAKER	RUN/ACC POWER #2 RELAY
KKB 14 YEL	RUN/ACC POWER #2 RELAY (REF LLE)	GENERAL PURPOSE (RUN/ACC FEED #2)

WIRE IDENTIFICATION CHART

CODE/COLOR	FROM:	TO:
KKC 12 YEL	POWER SEAT RELAY	POWER SEAT (HEATER)
KKD 16 YEL	CONFIRMATION EMERGENCY SHUT OFF SWITCH (IN COACH)	EMERGENCY SHUT OFF SWITCH (ON REMOTE FILL BRACKET)
KKE 16 YEL	EMERGENCY SHUT OFF SWITCH (ON REMOTE FILL BRACKET)	EMERGENCY SHUT OFF SOLENOID (ON LP TANK)
KKF 6 BLK	BATTERY DISCONNECT RELAY	COACH BUSS BAR
KKG 8 BLK	BATTERY MODE SOLENOID	CHASSIS BUSS BAR
KKH 14 YEL	EXTERIOR SERVICE LAMP SWITCH #1	EXTERIOR SERVICE LAMP SWITCH #2
KKJ 14 YEL	EXTERIOR SERVICE LAMP SWITCH #1	EXTERIOR SERVICE LAMP SWITCH #2
KKK 16 YEL	HWH WIRING (SWITCHED BATTERY POWER)	SLIDEOUT ROOM #2 SWITCH (POSITIVE)
KKL 16 YEL	HWH WIRING (SWITCHED BATTERY POWER)	SLIDEOUT ROOM #3 SWITCH (POSITIVE)
KKM 16 YEL	HWH WIRING (SWITCHED BATTERY POWER)	SLIDEOUT ROOM #4 SWITCH (POSITIVE)
KKN 14 YEL	KEYLESS ENTRY PORCH LIGHT OUTPUT	PORCH/STEP/MAP LAMP
KKP 14 YEL	LOUNGE CEILING ROPE LAMP SWITCH (CIRCUIT #1)	LOUNGE CEILING ROPE LAMP (REF CIRCUIT SSZ)
KKR 14 YEL	BEDROOM CEILING ROPE LAMP SWITCH	BEDROOM CEILING ROPE LAMP
KKS 14 YEL	BEDROOM VALANCE LAMP SWITCH	BEDROOM VALANCE LAMP
KKT 14 YEL	BEDROOM "MOOD" LAMP SWITCH	BEDROOM "MOOD" LAMP
KKU 16 YEL	REAR TV SPEAKER OUTPUT (RIGHT POSITIVE)	RIGHT SPEAKER (POSITIVE)
KKV 16 WHT	REAR TV SPEAKER OUTPUT (RIGHT NEGATIVE)	RIGHT SPEAKER (NEGATIVE)
KKW 16 YEL	REAR TV SPEAKER OUTPUT (LEFT POSITIVE)	LEFT SPEAKER (POSITIVE)
KKX 16 WHT	REAR TV SPEAKER OUTPUT (LEFT NEGATIVE)	LEFT SPEAKER (NEGATIVE)

WIRE IDENTIFICATION CHART

CODE/COLOR	FROM:	TO:
KKY 14 YEL	OVERCURRENT PROTECTION (15A FUSE/BREAKER TYPICAL)	COACH LIGHTING,ETC CIRCUIT #8 (REF KKZ)
KKZ 14 WHT	COACH LIGHTING (REF KKY)	GROUND
LLA 14 YEL	OVERCURRENT PROTECTION (15A FUSE/BREAKER TYPICAL)	COACH LIGHTING,ETC CIRCUIT #9 (REF LLB)
LLB 14 WHT	COACH LIGHTING (REF LLA)	GROUND
LLC 14 YEL	SEAT HEATER BREAKER (15 AMP BREAKER TYPICAL)	SEAT HEATER RELAY POSITION 30
LLD 14 WHT	RUN/ACC FEED #1 (REF JJZ)	GROUND
LLE 14 WHT	RUN/ACC FEED #2 (REF KKB)	GROUND
LLF 14 YEL	DOME LAMP RELAY	DOME LAMP
LLG 10/12 YEL	TRAILER BRAKE SIGNAL (OUTPUT FROM CONTROLLER)	TRAILER CONNECTOR (ELECTRIC BRAKES)
LLH 14 WHT	RUN ONLY GROUND SOURCE (CHASSIS SUPPLIED)	AUX START RELAY
LLJ 14 YEL	AUX START RELAY (RUN ONLY POWER)	AUX START SWITCH
LLK 10 YEL	CHASSIS BREAKER PANEL (LH FRT SLIDE)(FRT RAM)	CONTROL MODULE (LH FRT SLIDE)
LLL 10 WHT	CHASSIS GROUND BAR (LH FRT SLIDE)(FRT RAM)	CONTROL MODULE (LH FRT SLIDE)
LLM 10 YEL	CHASSIS BREAKER PANEL (LH FRT SLIDE)(REAR RAM)	CONTROL MODULE (LH FRT SLIDE)
LLN 10 WHT	CHASSIS GROUND BAR (LH FRT SLIDE)(REAR RAM)	CONTROL MODULE (LH FRT SLIDE)
LLP 10 YEL	CHASSIS BREAKER PANEL (REAR SLIDE RAM)	CONTROL MODULE (REAR SLIDE)
LLR 10 WHT	CHASSIS GROUND BAR (REAR SLIDE RAM)	CONTROL MODULE (REAR SLIDE)
LLS 10 YEL	CONTROL MODULE (LEFT FRONT SLIDE)	LT FRT SLIDE FRT RAM (MOTOR DRIVE LINE)
LLT 10 YEL	CONTROL MODULE (LEFT FRONT SLIDE)	LT FRT SLIDE FRT RAM (MOTOR DRIVE LINE)

WIRE IDENTIFICATION CHART

CODE/COLOR	FROM:	TO:
LLU 10 YEL	CONTROL MODULE (LEFT FRONT SLIDE)	LT FRT SLIDE RR RAM (MOTOR DRIVE LINE)
LLV 10 YEL	CONTROL MODULE (REAR SLIDE)	REAR SLIDEOUT RAM (MOTOR DRIVE LINE)
LLW 10 YEL	CONTROL MODULE (LEFT FRONT SLIDE)	LT FRT SLIDE RR RAM (MOTOR DRIVE LINE)
LLX 10 YEL	CONTROL MODULE (REAR SLIDE)	REAR SLIDEOUT RAM (MOTOR DRIVE LINE)
LLY 16 WHT	CONTROL MODULE (REAR SLIDE)(GROUND)	SLIDEOUT SWITCH (REAR SLIDEOUT)
LLZ 16 YEL	CONTROL MODULE (REAR SLIDE)(RETRACT)	SLIDEOUT SWITCH (REAR SLIDEOUT)
MMA 16 YEL	CONTROL MODULE (REAR SLIDE)(STOP)	SLIDEOUT SWITCH (REAR SLIDEOUT)
MMB 16 YEL	CONTROL MODULE (REAR SLIDE)(GREEN LED)	SLIDEOUT SWITCH (REAR SLIDEOUT)
MMC 16 YEL	CONTROL MODULE (REAR SLIDE)(EXTEND)	SLIDEOUT SWITCH (REAR SLIDEOUT)
MMD 16 YEL	CONTROL MODULE (REAR SLIDE)(RED LED)	SLIDEOUT SWITCH (REAR SLIDEOUT)
MME 10 YEL	CHASSIS SIDE OF SOLENOID (FRT LT/REAR SLIDE RAMS)	BREAKER PANEL BUSS BAR (FRT LT/REAR SLIDE RAMS)
MMF 10 YEL	CHASSIS SIDE OF SOLENOID (FRT RT SLIDE RAMS)	BREAKER PANEL BUSS BAR (FRT RT SLIDE RAMS)
MMG 10 YEL	CHASSIS SIDE OF SOLENOID (REAR SLIDE RAM)	BREAKER PANEL (REAR SLIDE RAM)
MMH 16 YEL	OVERCURRENT PROTECTION (6 AMP BREAKER TYPICAL)	POWER SUNVISOR SWITCH
MMJ 16 WHT	GROUND	POWER SUNVISOR SWITCH
MMK 16 YEL	BEDROOM STEREO (LEFT SPEAKER REF)	CROSS OVER BOX (POSITIVE)
MML 16 WHT	BEDROOM STEREO (LEFT SPEAKER REF)	CROSS OVER BOX (NEGATIVE)
MMM 16 YEL	BEDROOM STEREO (RIGHT SPEAKER REF)	CROSS OVER BOX (POSITIVE
MMN 16 WHT	BEDROOM STEREO (RT/WOOFER SPKER REF)	CROSS OVER BOX (NEGATIVE)

WIRE IDENTIFICATION CHART

CODE/COLOR	FROM:	TO:
MMP 16 YEL	CROSS OVER COIL (POSITIVE)	SUBWOOFER (BEDROOM)
MMR 14 YEL	CHASSIS TOW MARKER LAMPS CIRCUIT	TRAILER CONNECTOR (TAIL/MARKER LAMPS)
MMS 12 YEL	+12V	PASSENGER AC/HEATER CONTROLS
MMT 12 YEL	PASSENGER FAN SWITCH (LOW SPEED)	PASSENGER FAN
MMU 12 YEL	PASSENGER FAN SWITCH (MED SPEED)	PASSENGER FAN
MMV 12 YEL	PASSENGER FAN SWITCH (HIGH SPEED)	PASSENGER FAN
MMW 16 YEL	+12V	PASSENGER CONTROL PANEL LAMPS
MMX 16 WHT	PASSENGER CONTROL PANEL LAMPS	GROUND
MMY 16 WHT	PASSENGER TEMP AND VENT CONTROL	GROUND
MMZ 12 YEL	SLIDEOUT ROOM CONTROL SWITCH (RAM #1)	SLIDEOUT DRIVE MOTOR LEAD #1
NNA 12 YEL	SLIDEOUT ROOM CONTROL SWITCH (RAM #1)	SLIDEOUT DRIVE MOTOR LEAD #2
NNB 16 YEL	CONTROL MODULE (FRONT SLIDE) (SIGNAL)	FRONT SLIDE FRONT RAM (ENCODER)
NNC 16 YEL	CONTROL MODULE (FRONT SLIDE) (+)	FRONT SLIDE FRONT RAM (ENCODER)
NND 16 WHT	CONTROL MODULE (FRONT SLIDE) (-)	FRONT SLIDE FRONT RAM (ENCODER)
NNE 16 YEL	CONTROL MODULE (FRONT SLIDE) (SIGNAL)	FRONT SLIDE REAR RAM (ENCODER)
NNF 16 YEL	CONTROL MODULE (FRONT SLIDE) (+)	FRONT SLIDE REAR RAM (ENCODER)
NNG 16 WHT	CONTROL MODULE (FRONT SLIDE) (-)	FRONT SLIDE REAR RAM (ENCODER)
NNH 12 YEL	CONTROL MODULE (RAM #2)	SLIDEOUT ACTURATOR DRIVE LEAD #1
NNJ 12 YEL	CONTROL MODULE (RAM #2)	SLIDEOUT ACTURATOR DRIVE LEAD #2

WIRE IDENTIFICATION CHART

CODE/COLOR	FROM:	TO:
NNK 16 YEL	KEYLESS ENTRY TOUCH PAD SIGNAL	ENTRANCE DOOR TOUCH PAD
NNL 16 YEL	PASSENGER TEMP CONTROL (CONTROL OUT)	PASSENGER AC/HEATER
NNM 16 YEL	PASSENGER VENT CONTROL (CONTROL OUT)	PASSENGER VENT
NNN 16 YEL	CONTROL MODULE (RIGHT FRONT SLIDE)(STOP)	SLIDEOUT SWITCH (RIGHT FRONT SLIDE)
NNP 16 YEL	CONTROL MODULE (RIGHT FRONT SLIDE)(GREEN LED)	SLIDEOUT SWITCH (RIGHT FRONT SLIDE)
NNR 16 YEL	CONTROL MODULE (RIGHT FRONT SLIDE)(RED LED)	SLIDEOUT SWITCH (RIGHT FRONT SLIDE)
NNS 16 WHT	CONTROL MODULE (RIGHT FRONT SLIDE)(GROUND)	SLIDEOUT SWITCH (RIGHT FRONT SLIDEOUT)
NNT 16 YEL	CONTROL MODULE (RIGHT FRONT SLIDE)(SIGNAL)	RIGHT FRONT SLIDE,FRONT RAM (ENCODER)
NNU 16 YEL	CONTROL MODULE (RIGHT FRONT SLIDE)(+)	RIGHT FRONT SLIDE,FRONT RAM (ENCODER)
NNV 16 WHT	CONTROL MODULE (RIGHT FRONT SLIDE)(-)	RIGHT FRONT SLIDE,FRONT RAM (ENCODER)
NNW 16 YEL	CONTROL MODULE (RIGHT FRONT SLIDE)(SIGNAL)	RIGHT FRONT SLIDE,REAR RAM (ENCODER)
NNX 16 YEL	CONTROL MODULE (RIGHT FRONT SLIDE)(+)	RIGHT FRONT SLIDE,REAR RAM (ENCODER)
NNY 16 WHT	CONTROL MODULE (RIGHT FRONT SLIDE)(-)	RIGHT FRONT SLIDE,REAR RAM (ENCODER)
NNZ 10 YEL	CHASSIS BREAKER PANEL (RH FRT SLIDE)(FRT RAM)	CONTROL MODULE (RIGHT FRONT SLIDE)
PPA 10 WHT	CHASSIS GROUND BAR (RH FRT SLIDE)(FRT RAM)	CONTROL MODULE (RIGHT FRONT SLIDE)
PPB 10 YEL	CHASSIS BREAKER PANEL (RH FRT SLIDE)(REAR RAM)	CONTROL MODULE (RIGHT FRONT SLIDE)
PPC 10 WHT	CHASSIS GROUND BAR (RH FRT SLIDE)(REAR RAM)	CONTROL MODULE (RIGHT FRONT SLIDE)
PPD 10 YEL	CONTROL MODULE (RIGHT FRONT SLIDE)	RH FRT SLIDE FRT RAM (MOTOR DRIVE LINE)
PPE 10 YEL	CONTROL MODULE (RIGHT FRONT SLIDE)	RH FRT SLIDE FRT RAM (MOTOR DRIVE LINE)

WIRE IDENTIFICATION CHART

CODE/COLOR	FROM:	TO:
PPF 10 YEL	CONTROL MODULE (RIGHT FRONT SLIDE)	RH FRT SLIDE RR RAM (MOTOR DRIVE LINE)
PPG 10 YEL	CONTROL MODULE (RIGHT FRONT SLIDE)	RH FRT SLIDE RR RAM (MOTOR DRIVE LINE)
PPH 14 YEL	CHASSIS CLEARANCE LAMPS CRT #2 (REF MM)	CLEARANCE/MARKER LAMPS
PPJ 14 YEL	PASSENGER SUNVISOR SWITCH DRIVER'S SIDE	PASSENGER SUNVISOR SWITCH PASSENGER'S SIDE
PPK 14 YEL	PASSENGER SUNVISOR SWITCH DRIVER'S SIDE	PASSENGER SUNVISOR SWITCH PASSENGER'S SIDE
PPL 14 YEL	DASH RADIO ACCESSORY POWER	TV/RADIO SPEAKER SELECTOR SWITCH
PPM 12 YEL	OVERCURRENT PROTECTION (15A BREAKER TYPICAL)	LEFT FRONT SLIDEOUT LOCK SWITCH
PPN 12 WHT	LEFT FRONT SLIDEOUT LOCK SWITCH (REF PPM)	GROUND
PPP 12 YEL	OVERCURRENT PROTECTION (15A BREAKER TYPICAL)	RIGHT FRONT SLIDEOUT LOCK SWITCH
PPR 12 WHT	RIGHT FRONT SLIDEOUT LOCK SWITCH (REF PPP)	GROUND
PPS 12 YEL	LEFT FRONT SLIDEOUT LOCK SWITCH	LEFT FRONT SLIDEOUT LOCK MOTOR
PPT 12 YEL	LEFT FRONT SLIDEOUT LOCK SWITCH	LEFT FRONT SLIDEOUT LOCK MOTOR
PPU 12 YEL	RIGHT FRONT SLIDEOUT LOCK SWITCH	RIGHT FRONT SLIDEOUT LOCK MOTOR
PPV 12 YEL	RIGHT FRONT SLIDEOUT LOCK SWITCH	RIGHT FRONT SLIDEOUT LOCK MOTOR
PPW 14 YEL	SLIDEOUT LOCK SWITCH W/SLIDEOUT SWITCH #1 IN DASH	SLIDEOUT ROOM #1 SWITCH (POSITIVE)
PPX 14 YEL	SLIDEOUT LOCK SWITCH W/SLIDEOUT SWITCH #3 IN DASH	SLIDEOUT ROOM #3 SWITCH (POSITIVE)
PPY 14 YEL	SLIDEOUT LOCK SWITCH W/SLIDEOUT SWITCH #4 IN DASH	SLIDEOUT ROOM #4 SWITCH (POSITIVE)
PPZ 12 YEL	CHASSIS SUPPLIED WIRING	TRAILER TOW BATTERY FEED (7 WAY TOW CONNECTOR)
RRA 14 YEL	GENERAL SWITCH	GENERAL LAMP

WIRE IDENTIFICATION CHART

CODE/COLOR	FROM:	TO:
RRB 14 YEL	GENERAL SWITCH	GENERAL LAMP
RRC 14 YEL	GENERAL SWITCH	GENERAL LAMP
RRD 14 YEL	GALLEY CEILING FAN SWITCH	GALLEY CEILING FAN
RRE 14 YEL	10 OHM RESISTOR	LOUNGE CEILING FAN (LOW SPEED)
RRF 14 YEL	BEDROOM READING LAMP SWITCH	BEDROOM READING LAMP
RRG 14 YEL	BEDROOM READING LAMP SWITCH #1 (2 SWITCH SYSTEM)	BEDROOM READING LAMP SWITCH #2 (2 SWITCH SYSTEM)
RRH 14 YEL	BEDROOM READING LAMP SWITCH #1 (2 SWITCH SYSTEM)	BEDROOM READING LAMP SWITCH #2 (2 SWITCH SYSTEM)
RRJ 12 WHT	SEVEN PIN CONNECTOR (TRAILER CONNECTOR)	GROUND
RRK 16 YEL	2ND GALLEY HOLDING TANK	SELECTOR SWITCH
RRL 16 YEL	HOLDING TANK SELECTOR SWITCH	MONITOR PANEL
RRM 14 YEL	CENTER POWER SUNVISOR SWITCH	CENTER SUNVISOR
RRN 14 YEL	CENTER POWER SUNVISOR SWITCH	CENTER SUNVISOR
RRP 16 YEL	THERMOSTAT (LOW STAGE)	FURNACE (LOW STAGE)
RRR 16 YEL	THERMOSTAT (HIGH STAGE)	FURNACE (HIGH STAGE)
RRS 16 YEL	SLIDEOUT LOCK SWITCH (#1)	SLIDEOUT LOCK SWITCH (#2)
RRT 16 YEL	AWNING CONTROL BOX (LOCATED IN HOUSING PIN 1)	DOOR AWNING LIMIT SWITCH (LOCATED IN HOUSING PIN 1)
RRU 16 WHT	AWNING CONTROL BOX (LOCATED IN HOUSING PIN 2)	DOOR AWNING LIMIT SWITCH (LOCATED IN HOUSING PIN 2)
RRV 14 YEL	VIDEO CAMERA SWITCHER	MONITOR
RRW 14 YEL	LOCKOUT POSITIONING SWITCH	FIREPLACE LOCKOUT RECP

WIRE IDENTIFICATION CHART

CODE/COLOR	FROM:	TO:
RRX 10 YEL	12V BREAKER PANEL (30 AMP TYPICAL)	SMART FUSE BLOCK (POSITIVE)
RRY 18 YEL	SMART FUSE BLOCK (COMMUNICATION BUS)	SMART FUSE SWITCH PANEL
RRZ 18 WHT	SMART FUSE BLOCK (COMMUNICATION GROUND)	SMART FUSE SWITCH PANEL
SSA 14 WHT	FRONT LEFT SLIDE LOCK (INDICATOR OUTPUT-GROUND)	FRONT LEFT LOCK SWITCH LED
SSB 14 WHT	FRONT RIGHT SLIDE LOCK (INDICATOR OUTPUT-GROUND)	FRONT RIGHT LOCK SWITCH LED
SSC 14 YEL	JACK CONTROL PANEL (LEVEL)	REMOTE AUTO LEVEL SWITCH
SSD 14 YEL	JACK CONTROL PANEL (STORE)	REMOTE AUTO LEVEL SWITCH
SSE 14 YEL	JACK CONTROL PANEL (COMMON)	REMOTE AUTO LEVEL SWITCH (+)HWH (-)KWIKEE
SSF 14 YEL	JACK CONTROL PANEL (INDICATOR LED)	REMOTE AUTO LEVEL SWITCH (-)HWH (+)KWIKEE
SSG 18 YEL	TRANSFORMER	AUTO GENERATOR START MONITOR PANEL
SSH 18 WHT	TRANSFORMER	AUTO GENERATOR START MONITOR PANEL
SSJ 10 YEL	BRAKE CONTROLLER POWER (30-AMP BREAKER TYPICAL)	BRAKE CONTROLLER (POWER INPUT)
SSK 14 WHT	BRAKE CONTROLLER (GROUND)	GROUND
SSL 14 YEL	CHASSIS REAR LAMP WIRING (LEFT TURN ONLY)	LEFT TURN SIGNAL *NOT COMBO TURN/BRAKE*
SSM 14 YEL	CHASSIS REAR LAMP WIRING (RIGHT TURN ONLY)	RIGHT TURN SIGNAL *NOT COMBO TURN/BRAKE*
SSN 18 WHT	FRONT RIGHT SLIDEOUT LOCK END SWITCH (FROM NNS)	CONTROL MODULE (RIGHT FRONT SLIDE)(GROUND)
SSP 18 WHT	LEFT FRONT SLIDEOUT LOCK END SWITCH (FROM DS)	CONTROL MODULE (LEFT FRONT SLIDE)(GROUND)
SSR 16 YEL	EXTERIOR HOLDING TANK SELECTOR SWITCH	EXTERIOR MONITOR PANEL
SSS 16 YEL	EXTERIOR HOLDING TANK SELECTOR SWITCH	2ND GALLEY HOLDING TANK

WIRE IDENTIFICATION CHART

CODE/COLOR	FROM:	TO:
SST 14 YEL	GALLEY LAMP SWITCH #1	GALLEY LAMP SWITCH #2
SSU 14 YEL	GALLEY LAMP SWITCH #1	GALLEY LAMP SWITCH #2
SSV 14 YEL	BATH CEILING LAMP SWITCH #1 (2 SWITCH SYSTEM)	BATH CEILING LAMP SWITCH #2 (2 SWITCH SYSTEM)
SSW 14 YEL	BATH CEILING LAMP SWITCH #1 (2 SWITCH SYSTEM)	BATH CEILING LAMP SWITCH #2 (2 SWITCH SYSTEM)
SSX 12 YEL	DOOR AWNING SWITCH	DOOR AWNING CONTROL RELAY (RELAY POSITION 87A EXTEND)
SSY 12 WHT	DOOR AWNING SWITCH	DOOR AWNING LIMIT SWITCH
SSZ 14 YEL	LOUNGE CEILING ROPE LAMP SWITCH (CIRCUIT #2)	LOUNGE CEILING ROPE LAMP (REF CIRCUIT KKP)
TTA 14 YEL	LEVELING SYSTEM CONTROLS	INDICATOR LAMP/ALARM (POSITIVE)
TTB 14 WHT	LEVELING SYSTEM CONTROLS	INDICATOR LAMP/ALARM (NEGATIVE)
TTC 10 YEL	CHASSIS BATTERY	SLIDEOUT LOCK BREAKER
TTD 14 YEL	VEHICLE LEFT HEADLAMP HI BEAM CIRCUIT	LEFT HI BEAM LAMP
TTE 14 YEL	RELAY	RIGHT DOCKING LAMP
TTF 14 YEL	RELAY	LEFT DOCKING LAMP
TTG 18 YEL	FRONT THERMOSTAT (MAIN)	REMOTE SENSOR
TTH 18 YEL	FRONT THERMOSTAT (MAIN)	REMOTE SENSOR
TTJ 14 YEL	BRAKE LAMP CIRCUIT BREAKER	BRAKE LAMP RELAY
TTK 14 YEL	RIGHT TURNLAMP CIRCUIT BREAKER	RIGHT TURN LAMP RELAY
TTL 14 YEL	LEFT TURN LAMP CIRCUIT BREAKER	LEFT TURN LAMP RELAY
TTM 14 YEL	BACKUP LAMP CIRCUIT BREAKER	BACKUP LAMP RELAY

WIRE IDENTIFICATION CHART

CODE/COLOR	FROM:	TO:
TTN 14 YEL	PARK LAMP CIRCUIT BREAKER	PARK LAMP RELAY
TTP 12 YEL	AWNING CONTROL BOX	PATIO AWNING #2 (MOTOR POSITIVE)
TTR 12 WHT	AWNING CONTROL BOX	PATIO AWNING #2 (MOTOR GROUND)
TTS 16 YEL	AWNING CONTROL BOX	PATIO AWNING #2 (SWITCH EXTEND)
TTT 16 YEL	AWNING CONTROL BOX	PATIO AWNING #2 (SWITCH COMMON)
TTU 16 YEL	AWNING CONTROL BOX	PATIO AWNING #2 (SWITCH RETRACT)
TTV 16 YEL	AWNING CONTROL BOX	WIND SENSOR #2 (POSITIVE)
TTW 16 YEL	AWNING CONTROL BOX	WIND SENSOR #2 (NEGATIVE)
TTX 16 YEL	AWNING CONTROL BOX	WIND SENSOR #2 (SPEED OUTPUT)
TTY 18 YEL	CHASSIS BATT DISCONNECT RELAY (TERMINAL I)	CHASSIS BATT DISCONNECT SWITCH
TTZ 18 YEL	CHASSIS BATT DISCONNECT RELAY (TERMINAL S)	CHASSIS BATT DISCONNECT SWITCH
UUA 18 YEL	CHASSIS BATT DISCONNECT RELAY LOAD SIDE FUSE FEED	CHASSIS BATT DISCONNECT SWITCH INDICATOR LAMP
UUB 18 YEL	CHASSIS BATT DISCONNECT RELAY BATTERY SIDE FUSE FEED	CHASSIS BATT DISCONNECT SWITCH
UUC 18 WHT	CHASSIS BATT DISCONNECT SWITCH	GROUND
UUD 12 YEL	RIGHT REAR SLIDEOUT LOCK SWITCH	RIGHT REAR SLIDEOUT LOCK MOTOR
UUE 12 YEL	RIGHT REAR SLIDEOUT LOCK SWITCH	RIGHT REAR SLIDEOUT LOCK MOTOR