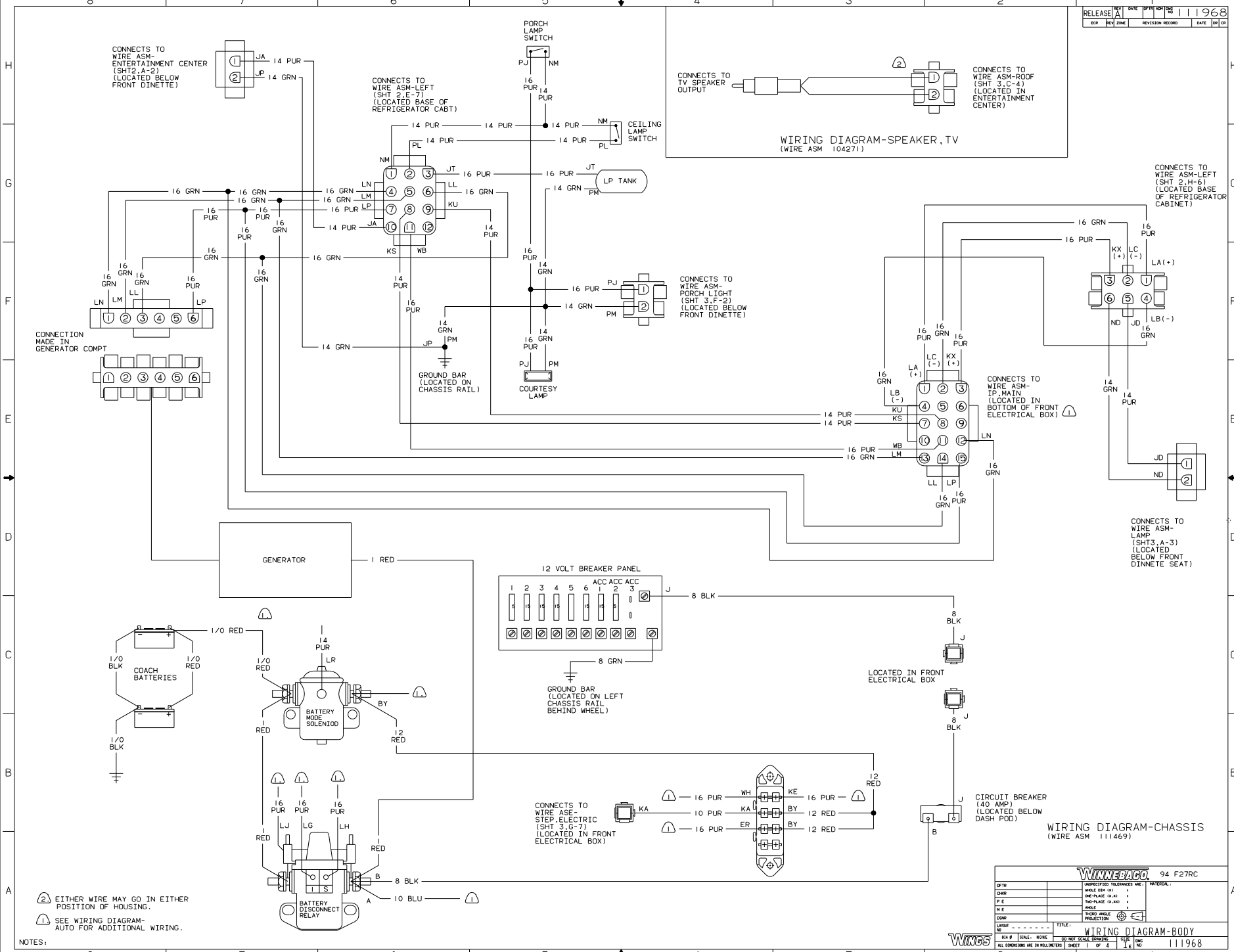

Copyright 2009 Winnebago Industries, Inc.

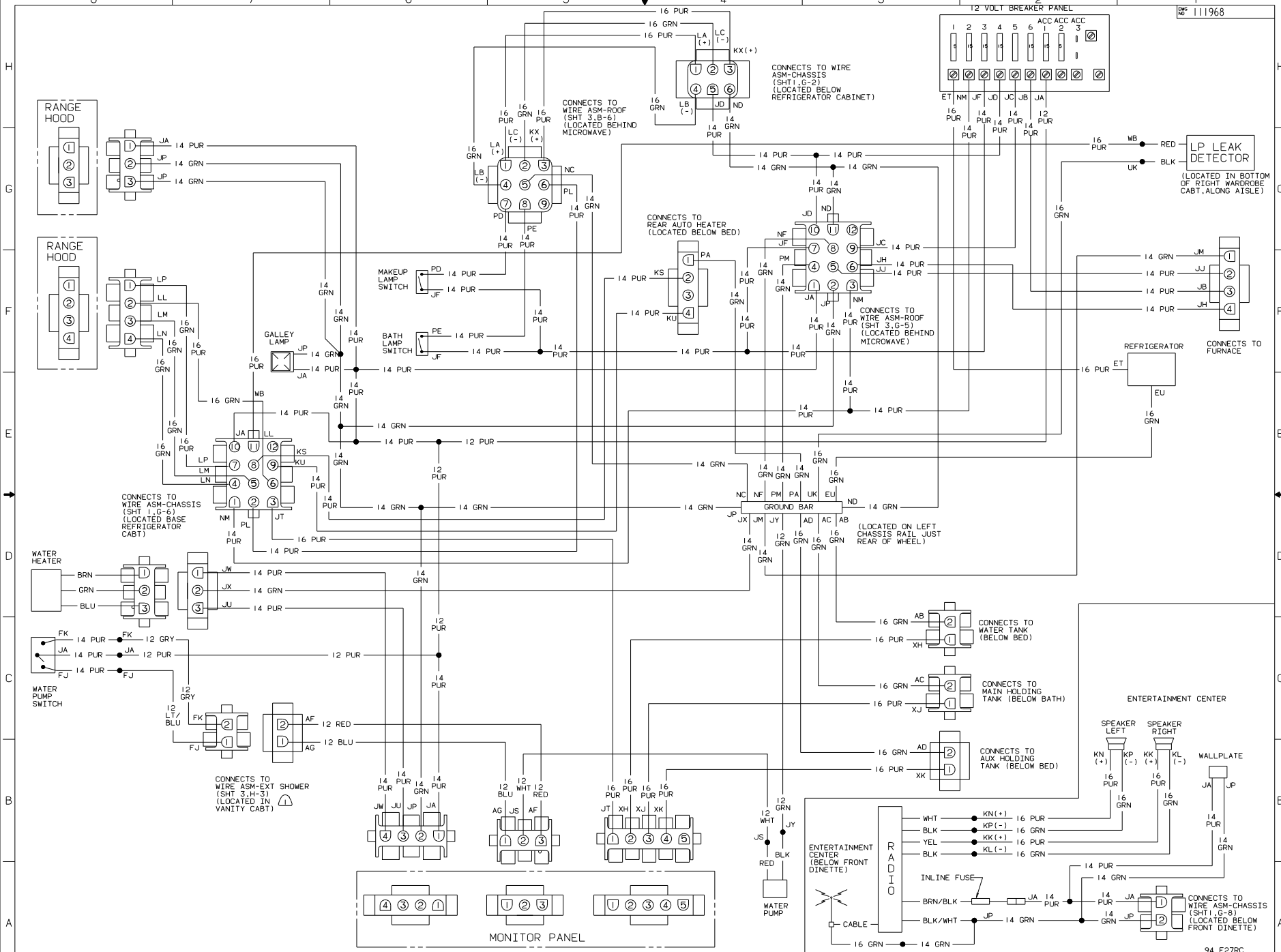

Copyright 2009 Winnebago Industries, Inc.

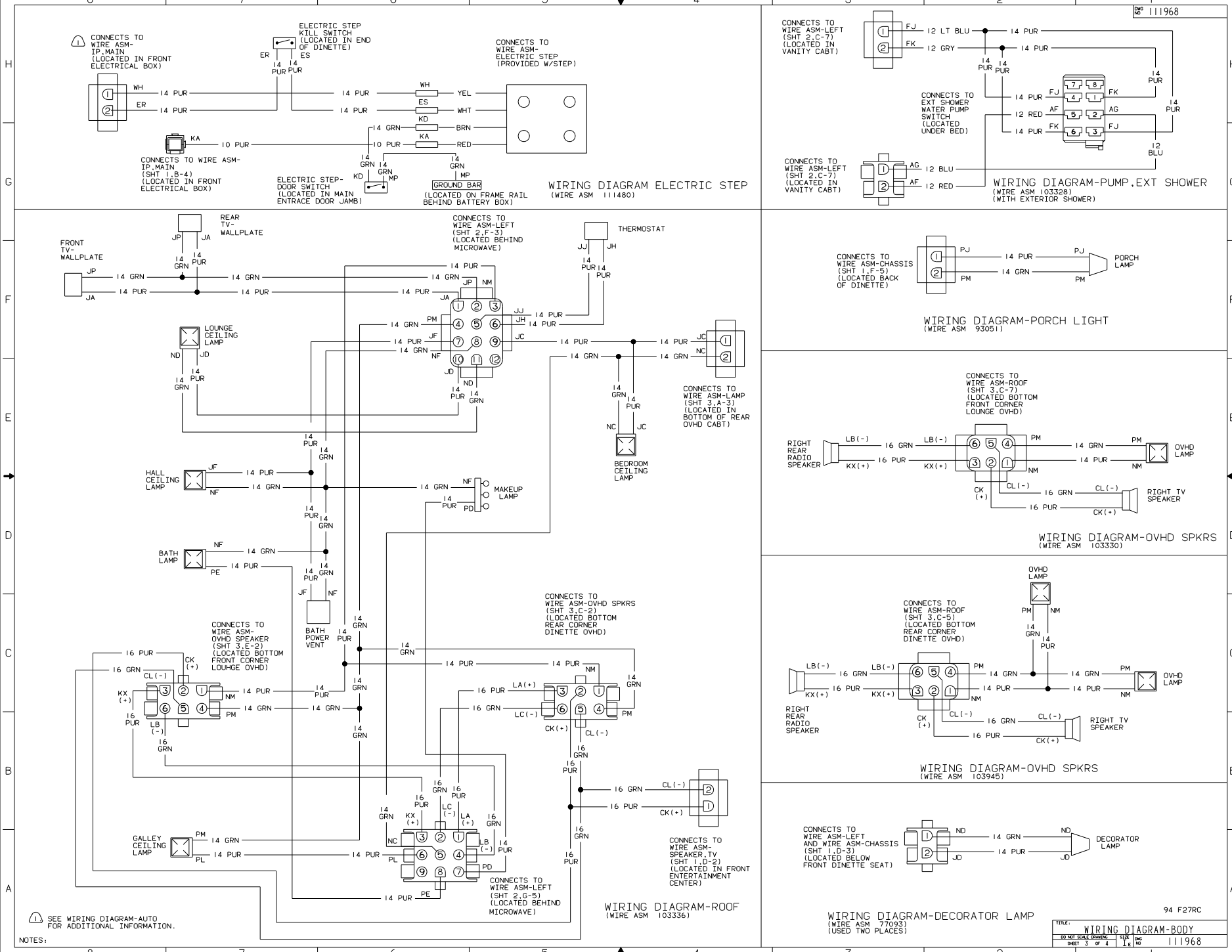

Copyright 2009 Winnebago Industries, Inc.

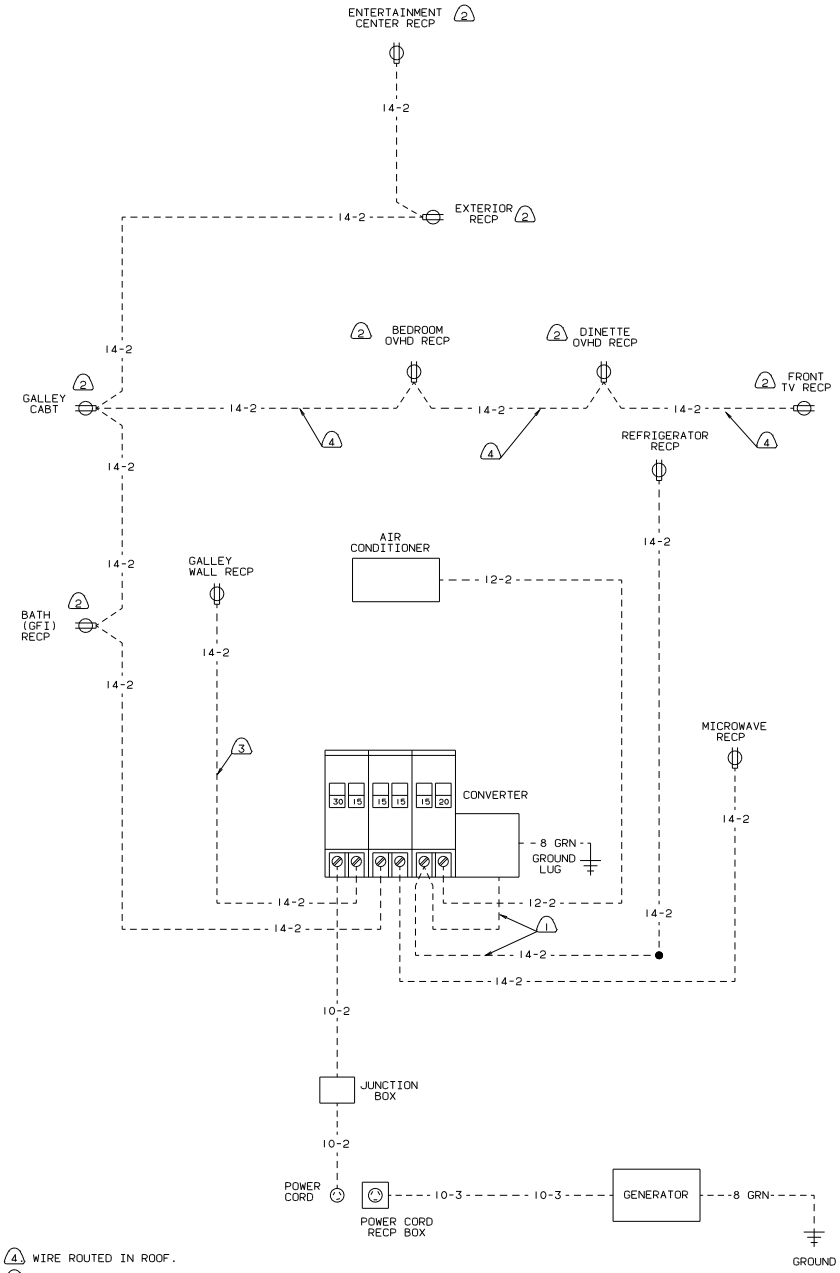

(CAN 110V WIRING)

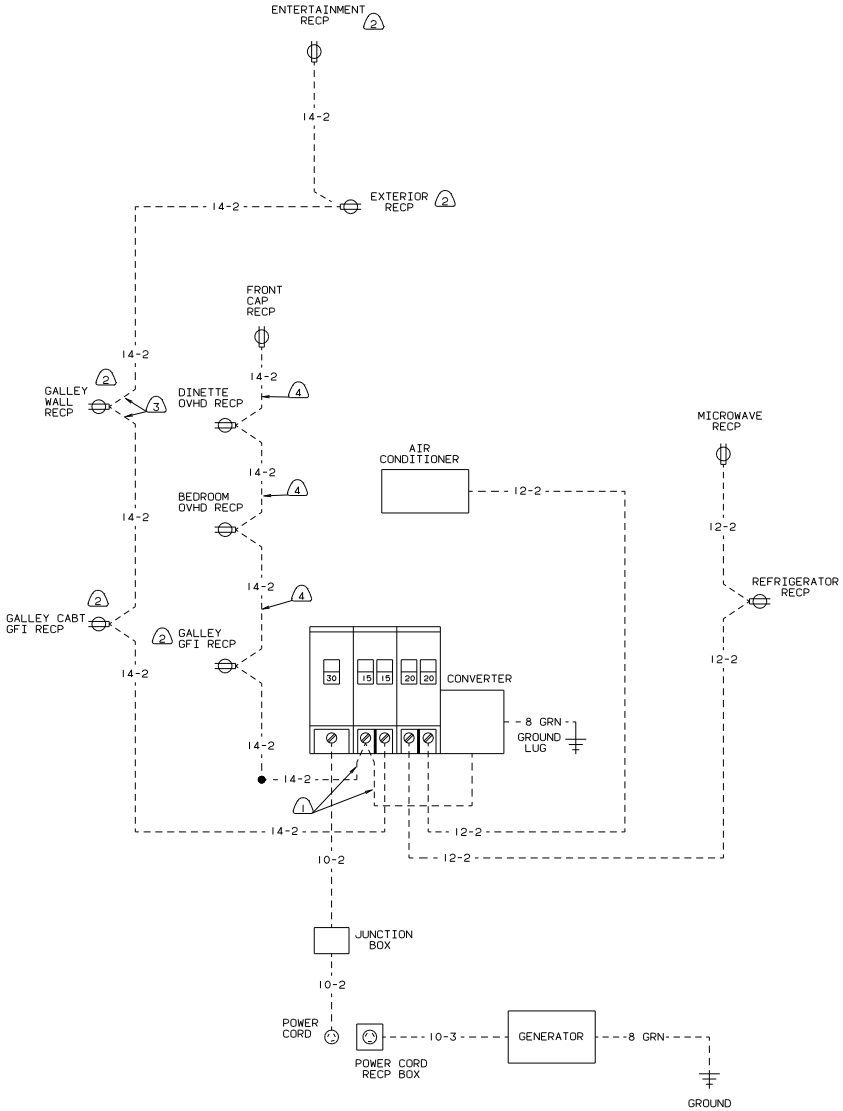

(US 110V WIRING)

4 WIRE ROUTED IN ROOF.
3 WIRE ROUTED IN SIDEWALL.
2 PROTECTED BY GROUND FAULT INTERRUPTER RECP.
1 LEAD SUPPLIED WITH CONVERTER.

NOTES:

94 F27RC

TITLE: WIRING DIAGRAM-BODY

DO NOT SCALE DRAWING | SHEET 4 OF 4 | SIZE Ie | DWG NO 111968

Copyright 2009 Winnebago Industries, Inc.