RELEASE	REV	DATE	DFTR	ADM	DWG NO
	A				110896

ECR	REV	ZONE	REVISION RECORD	DATE	DR	CR

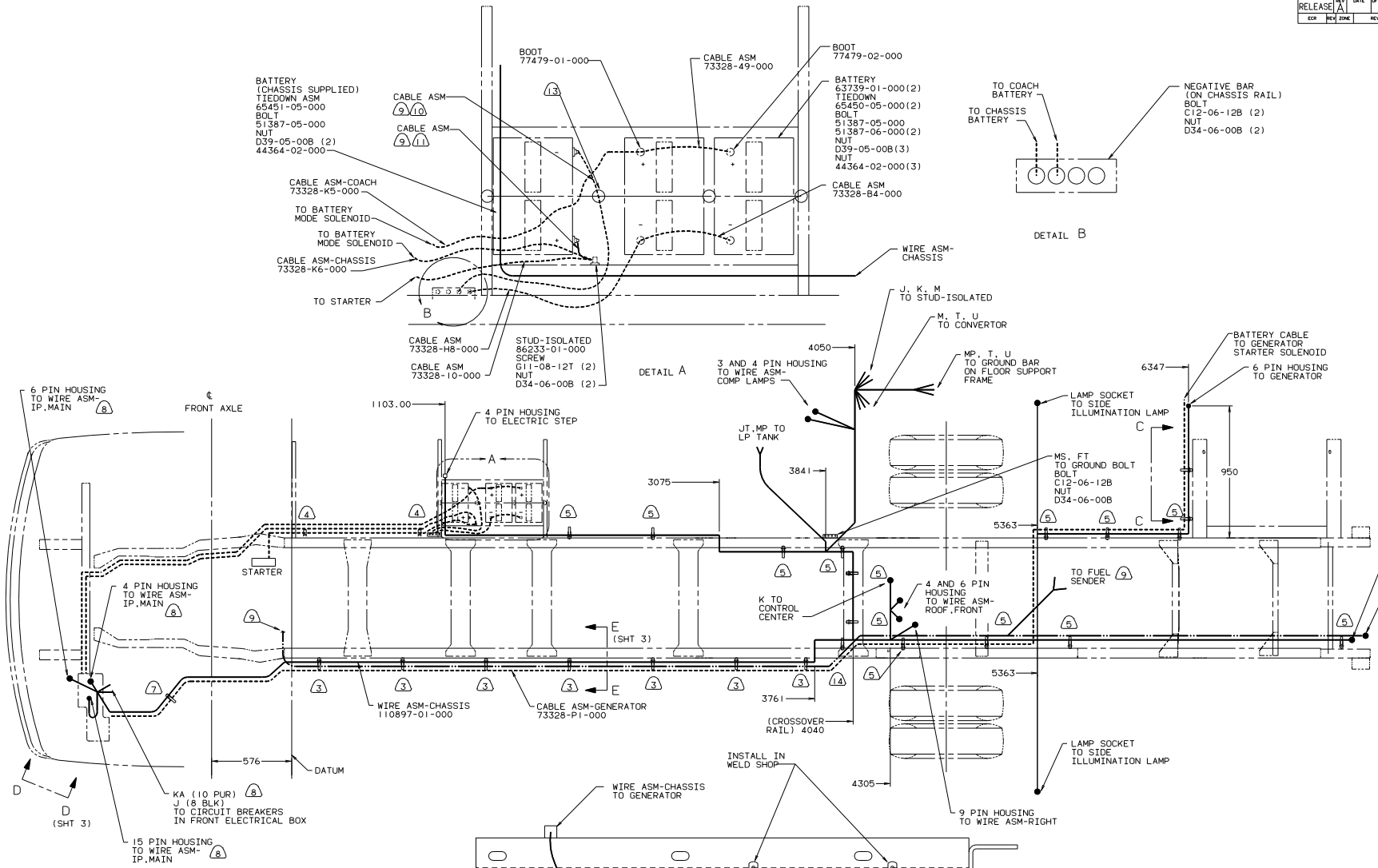

13 USE TWO NUTS HERE TO ACCOUNT FOR BATTERY HEIGHT DIFFERENCE.

12 ROUTE CABLES THRU CHASSIS RAIL IN THIS AREA. FOLLOW ORIGINAL CABLE PATHS INSIDE RAIL.

11 TRIM CABLE TO 400MM, ADD TERMINAL 8348-01-000.

10 TRIM CABLE TO 600MM, ADD TERMINAL 8348-01-000.

9 SUPPLIED WITH CHASSIS.

8 SEE WIRING INSTL-FRONT END FOR WIRING CONNECTIONS.

7 COVER WITH CONDUIT-41953-10-000 & 41953-11-000 AS REQUIRED.

6 SECURE SO WIRES DO NOT CONTACT EXHAUST.

5 CLAMP 10497-03-000, SCREW G11-10-16B.

4 CLAMP 83609-01-000, SCREW G11-10-16B.

3 CLAMP 83610-01-000, SCREW G11-10-16B.

2. SECURE CONDUIT 41953-01-000, 41953-02-000 AND 41953-03-000 OVER ALL WIRES IN CONTACT WITH SHARP EDGES.

1. LEGEND: ——— WINNEBAGO WIRING, ----- CABLE, — — — — GM WIRING.

NOTES:

14 ROUTE CABLES OVER CHASSIS RAIL IN THIS AREA, FOLLOW ORIGINAL CABLE PATHS INSIDE RAIL.

GM

WINNEBAGO 94 M31RQ

DFTR		UNSPECIFIED TOLERANCES ARE: WHOLE DIM (X) ± 3.0 ONE-PLACE (X.X) ± TWO-PLACE (X.XX) ± ANGLE ± THIRD ANGLE PROJECTION
CHKR		
P E		
M E		
DSNR		

MATERIAL:

LAYOUT NO - - - - - - - - TITLE: WIRING INSTL-CHASSIS

DIA Ø | SCALE: NONE | DO NOT SCALE DRAWING | SIZE 1E | DWG NO 110896

ALL DIMENSIONS ARE IN MILLIMETERS | SHEET 1 OF 3

REF 104245

Copyright 2009 Winnebago Industries, Inc.

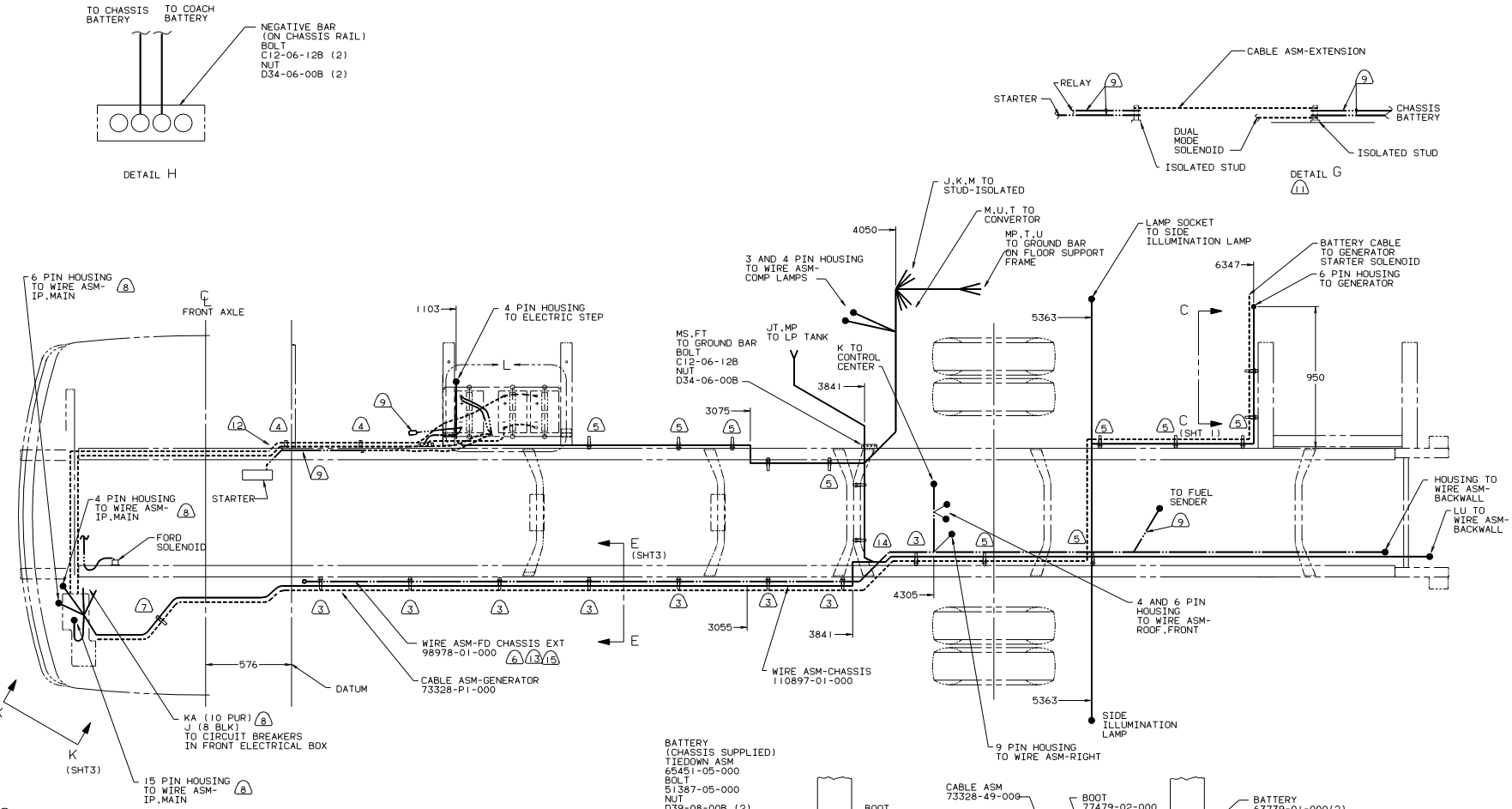

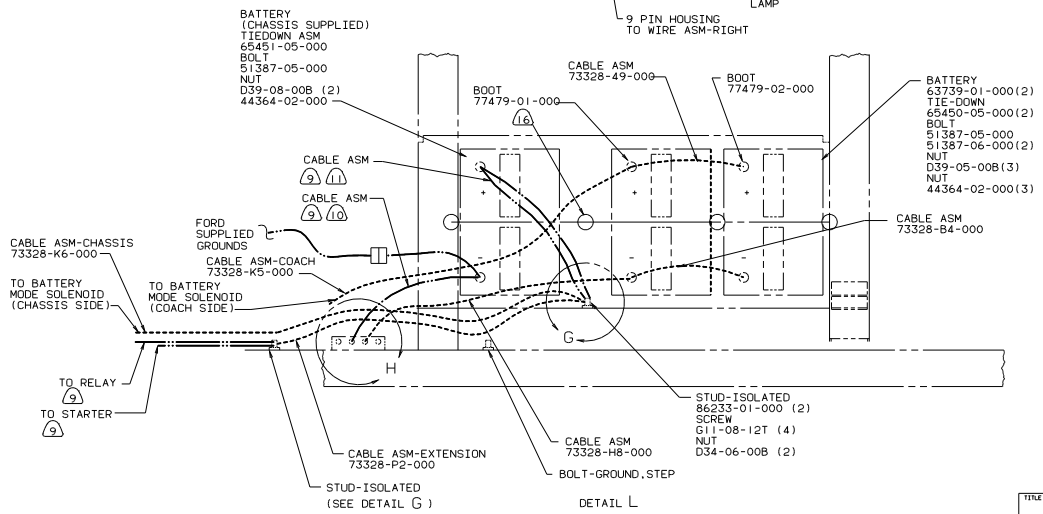

(16) USE TWO NUTS HERE TO ACCOUNT FOR BATTERY HEIGHT DIFFERENCE.

(15) USE ON 93 FORD CHASSIS ONLY.

(14) **ROUTE CABLES OVER CHASSIS RAIL IN THIS AREA. FOLLOW** ORIGINAL CABLE PATHS INSIDE RAIL.

(13) USE WIRE ASM-EXTENSION WITH EXTENDED CHASSIS ONLY.

(12) ROUTE CABLES THRU CHASSIS RAIL IN THIS AREA. FOLLOW ORIGINAL CABLE PATHS INSIDE RAIL.

(11) CUT 4 & 6 GA CABLES 500MM FROM BATTERY TERMINAL. ADD TERMINALS 8331-01-000 (2) TO 4 GA & 8330-01-000 (2) TO 6 GA CABLES.CONNECT ALL 4 TERMINALS TO ISOLATED STUD AS SHOWN IN DETAIL G. DO NOT CUT 14 GA RED WIRE.

(10) TRIM CABLE TO 600MM, ADD TERMINAL 8348-01-000.

(9) SUPPLIED WITH CHASSIS.

(8) SEE WIRING INSTL-FRONT END FOR WIRING CONNECTIONS.

(7) COVER WITH CONDUIT-41953-10-000 & 41953-11-000 AS REQUIRED.

(6) DISCONNECT EXISTING CHASSIS WIRE ASM NEAR TRANSMISSION AND INSERT WIRE ASM-FD CHASSSIS EXT.

(5) CLAMP 10497-03-000, SCREW G11-10-16B.

(4) CLAMP 83609-01-000, SCREW G11-10-16B.

(3) CLAMP 83610-01-000, SCREW G11-10-16B.

2. SECURE CONDUIT 41953-01-000, 41953-02-000 AND 41953-03-000 OVER ALL WIRES IN CONTACT WITH SHARP EDGES.

1. LEGEND: ——— WINNEBAGO WIRING, ----- CABLE, — — — — FORD WIRING.

NOTES:

FORD
94 M31RQ

TITLE: WIRING INSTL-CHASSIS

DO NOT SCALE DRAWING | SHEET 2 OF 3 | SIZE Ie | DWG NO 110896

Copyright 2009 Winnebago Industries, Inc.

DWG NO 110896

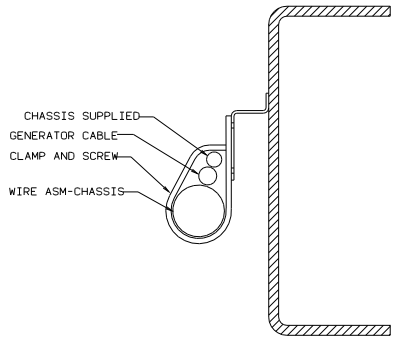

VIEW E-E

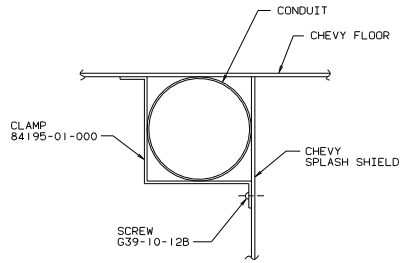

VIEW N-N
(3 PLCS)

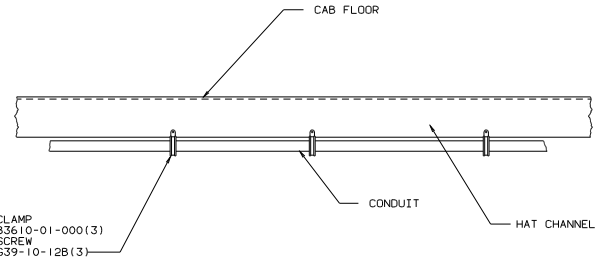

VIEW M-M

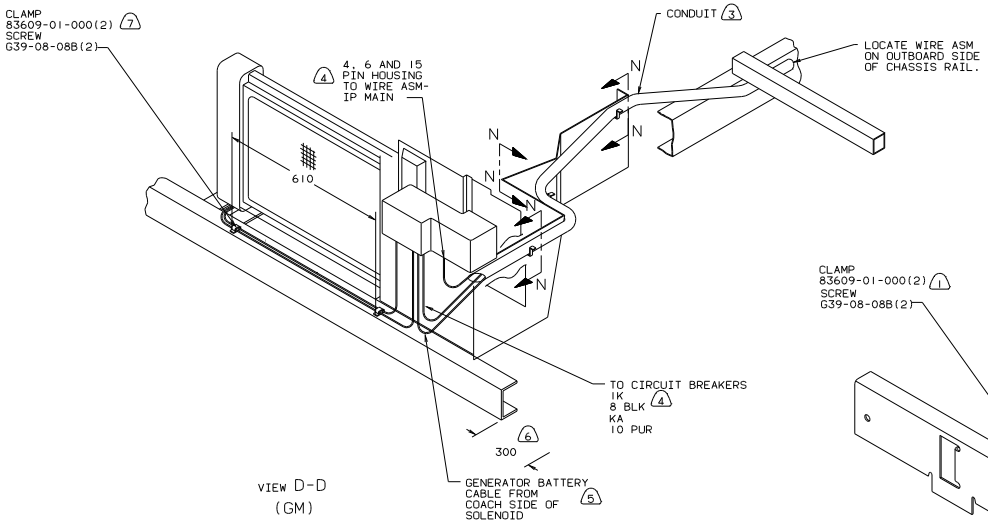

VIEW D-D
(GM)

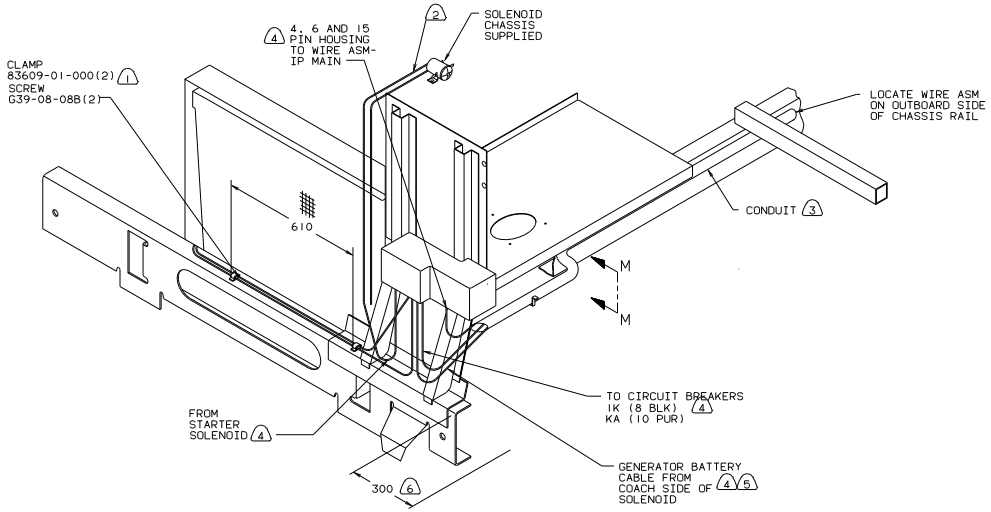

VIEW K-K
(FORD)

NOTES:

1. SPACE CLAMPS APPROX. 600 APART.
2. SUPPLIED WITH CHASSIS.
3. COVER WITH CONDUIT 41953-10-000 AND 41953-11-000 AS REQUIRED.
4. FOR ADDITIONAL INFORMATION SEE WIRING INSTALLATION FRONT END.
5. CONNECT CABLES TO COACH SIDE OF BATTERY DISCONNECT WHEN BATTERY DISCONNECT IS USED.
6. LAY BATTERY AND GENERATOR CABLES TO THIS DIMENSION FROM END OF CROSSMEMBER TO START INSTALLATION.

94 M31RQ

TITLE: WIRING INSTL-CHASSIS		
DO NOT SCALE DRAWING SHEET 3 OF 3	SIZE 1e	DWG NO 110896

Copyright 2009 Winnebago Industries, Inc.