SHEET	------
1	REGULAR
2	TOYE

RELEASE	REV	DATE	OPTN	ADM	DWG NO
	A				107658

ECR	REV	ZONE	REVISION RECORD	DATE	DR	CK

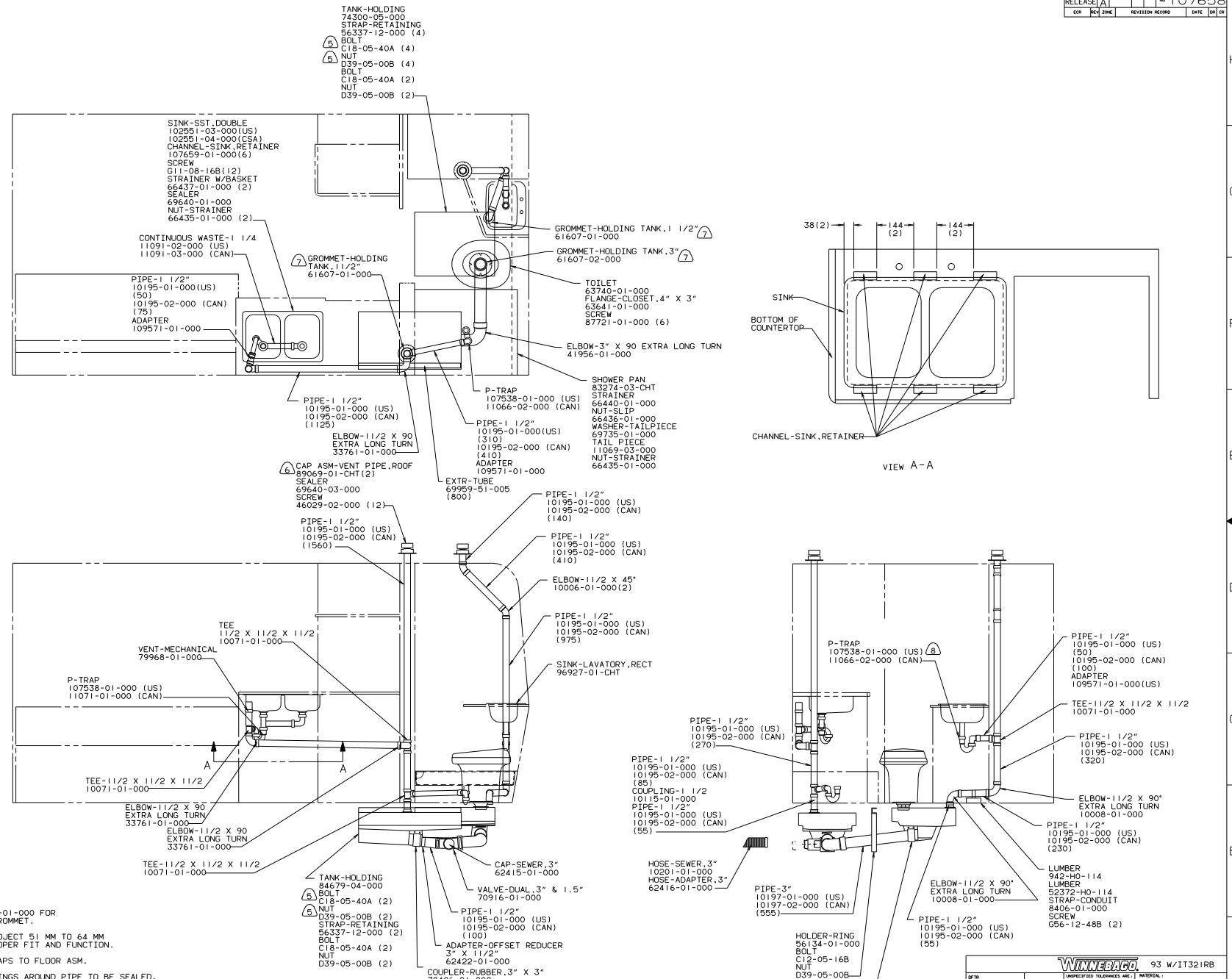

(7) SEE DRAWING 61607-01-000 FOR INSTALLATION OF GROMMET.

(6) VENT PIPE MUST PROJECT 51 MM TO 64 MM ABOVE ROOF FOR PROPER FIT AND FUNCTION.

(5) USED TO MOUNT STRAPS TO FLOOR ASM.

4. ALL EXTERIOR OPENINGS AROUND PIPE TO BE SEALED.
3. ALL PIPE AND FITTINGS TO BE ASSEMBLED WITH SOLVENT 4020-01-000.
2. SLOPE OF TRAP ARM MUST BE 21 PER METER.
1. SLOPE OF HORIZONTAL PIPING TO BE 10 PER METER MINIMUM.

NOTES:

WINNEBAGO. 93 W/IT321RB

		UNSPECIFIED TOLERANCES ARE:	MATERIAL:
DFTR		WHOLE DIM (X) ± 1.5	
CHKR		ONE-PLACE (X.X) ±	
P E		TWO-PLACE (X.XX) ±	
M E		ANGLE ±	
DSNR		THIRD ANGLE PROJECTION	

LAYOUT NO 321RB0 — TITLE: DRAINAGE SYSTEM INSTL

DIA Ø | SCALE: 0.1 | DO NOT SCALE DRAWING | SIZE I | DWG NO 107658

ALL DIMENSIONS ARE IN MILLIMETERS | SHEET 1 OF 2

WINGS

Copyright 2009 Winnebago Industries, Inc.

REF: 100084

DWG NO 107658

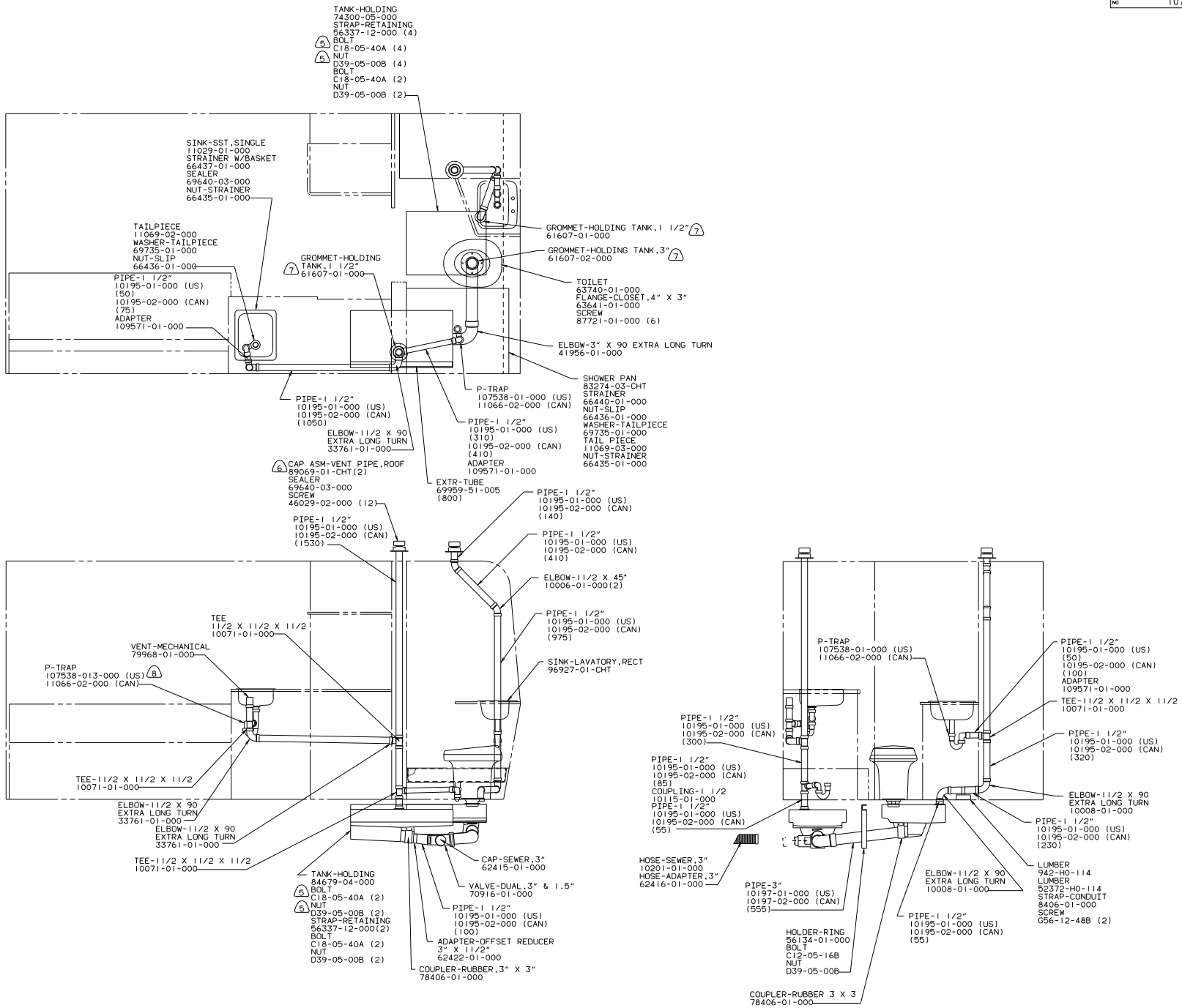

TITLE: DRAINAGE SYSTEM INSTL

DO NOT SCALE DRAWING | SIZE 1e | DWG NO 107658

SHEET 2 OF 2

Copyright 2009 Winnebago Industries, Inc.

RELEASE	REV A	DATE	DFTR	ADM	DWG NO 107632
ECR	REV	ZONE	REVISION RECORD	DATE	DR	CK

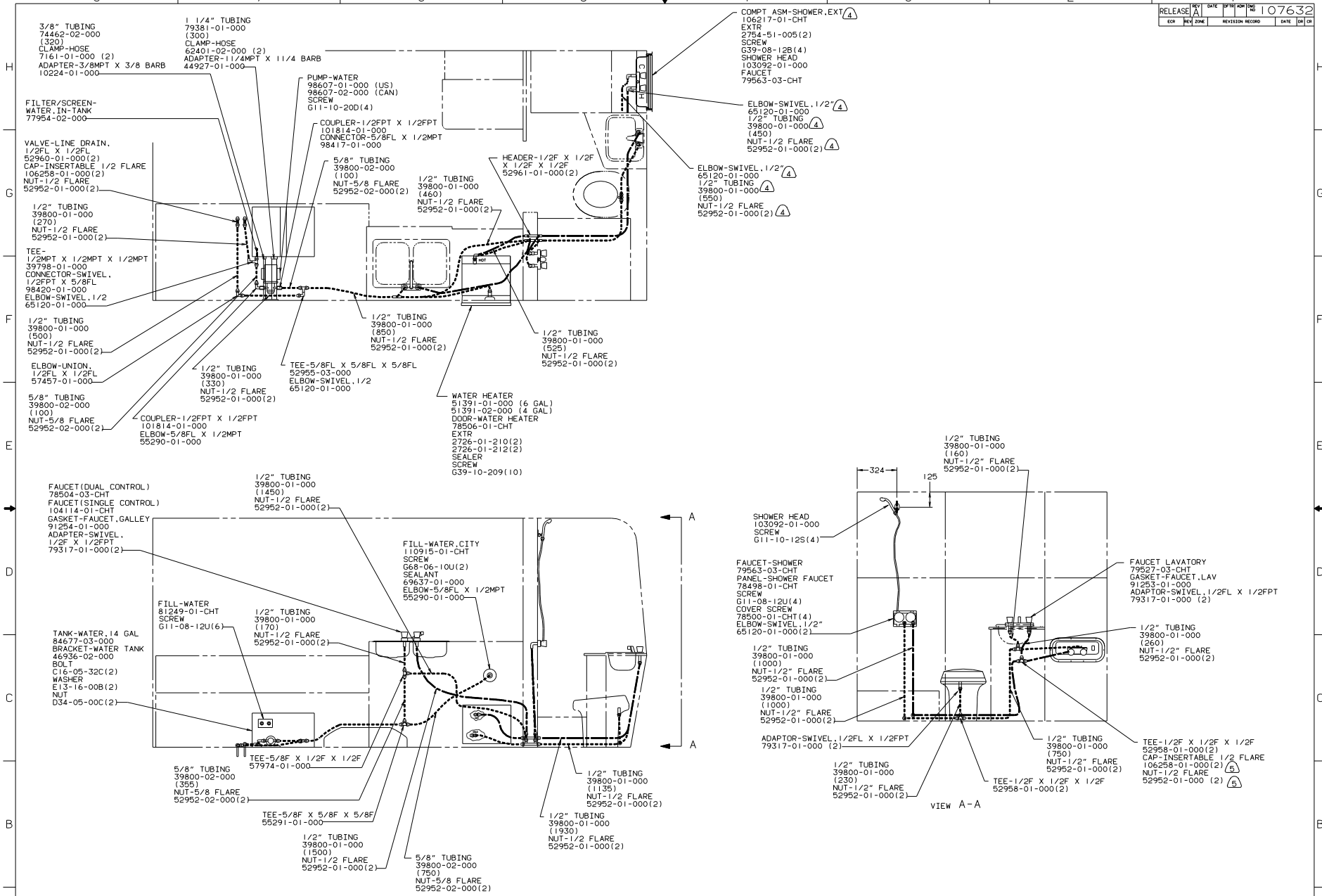

(5) USE WITHOUT EXTERIOR SHOWER.

(4) USE WITH EXTERIOR SHOWER.

3. ALL TUBING TO BE SECURED AT 1200 INTERVALS MAXIMUM WITH CLAMP 10495-01-000 AND SCREW G67-10-12B.

2. PLASTIC FITTINGS TO BE SEALED WITH SEALANT 84456-01-000.

1. TUBING TO BE INSTALLED WITH SUFFICENT SLOPE TO PROVIDE DRAINAGE TO NEAREST VALVE.

NOTES:

LEGEND

HOT LINES
COLD LINES

WINNEBAGO. 93 W/IT321RB

DFTR	UNSPECIFIED TOLERANCES ARE:	MATERIAL:	
CHKR	WHOLE DIM (X) ± 1.5		
P E	ONE-PLACE (X.X) ±		
M E	TWO-PLACE (X.XX) ±		
DSNR	ANGLE ±		
	THIRD ANGLE PROJECTION		

LAYOUT NO 321RB0 | TITLE: WATER SYSTEM INSTL

DIA Ø | SCALE: NONE | DO NOT SCALE DRAWING | SIZE I E | DWG NO 107632

ALL DIMENSIONS ARE IN MILLIMETERS | SHEET | OF 1

WINGS

Copyright 2009 Winnebago Industries, Inc.

REF: 100142