REV	DATE	DFTR	ACM	DWG NO
				96942

ECR	REV	ZONE	REVISION RECORD	DATE	DR	CH

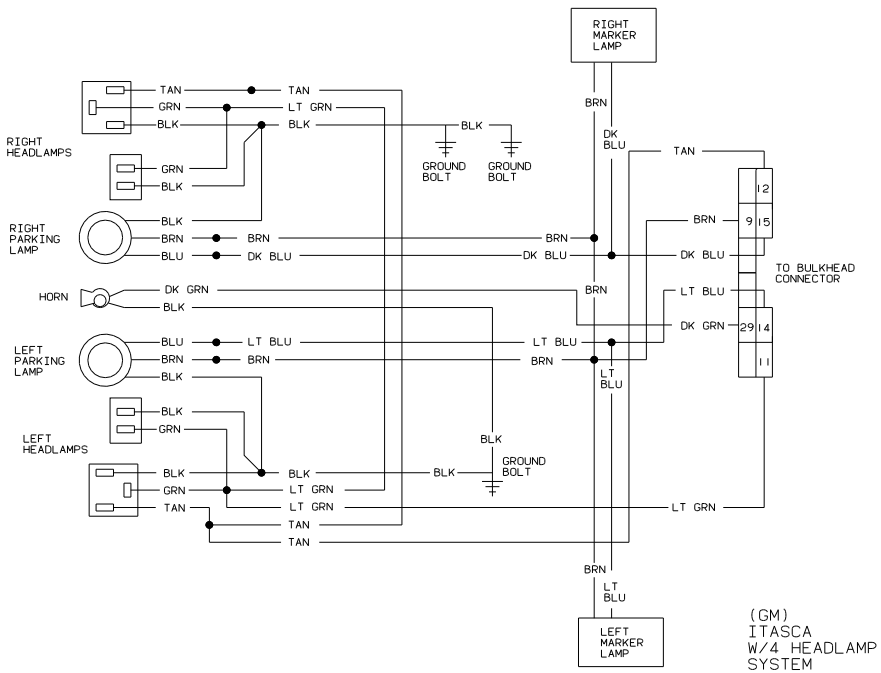

(GM)
ITASCA
W/4 HEADLAMP
SYSTEM

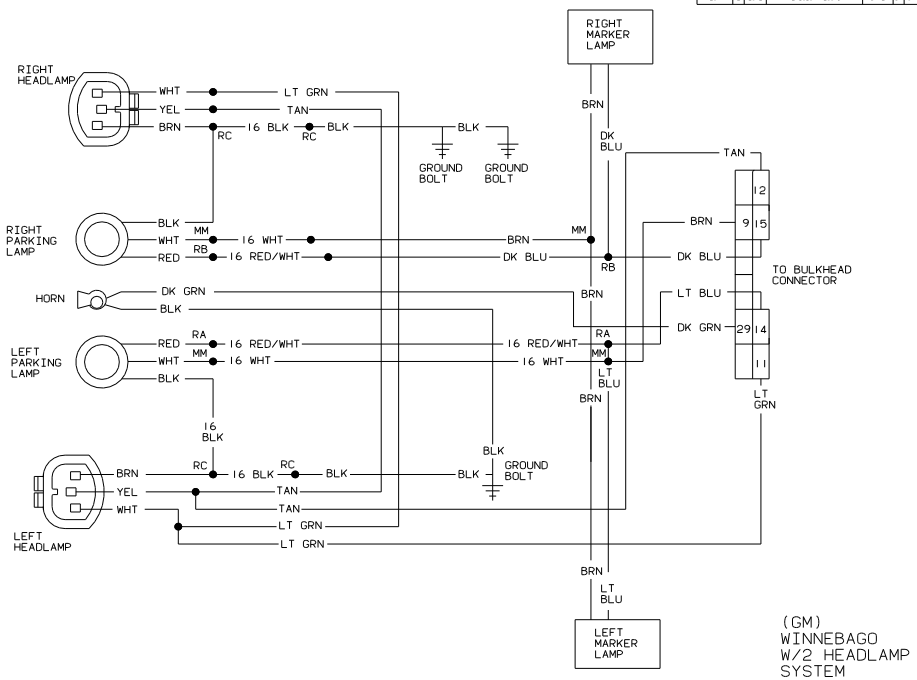

(GM)
WINNEBAGO
W/2 HEADLAMP
SYSTEM

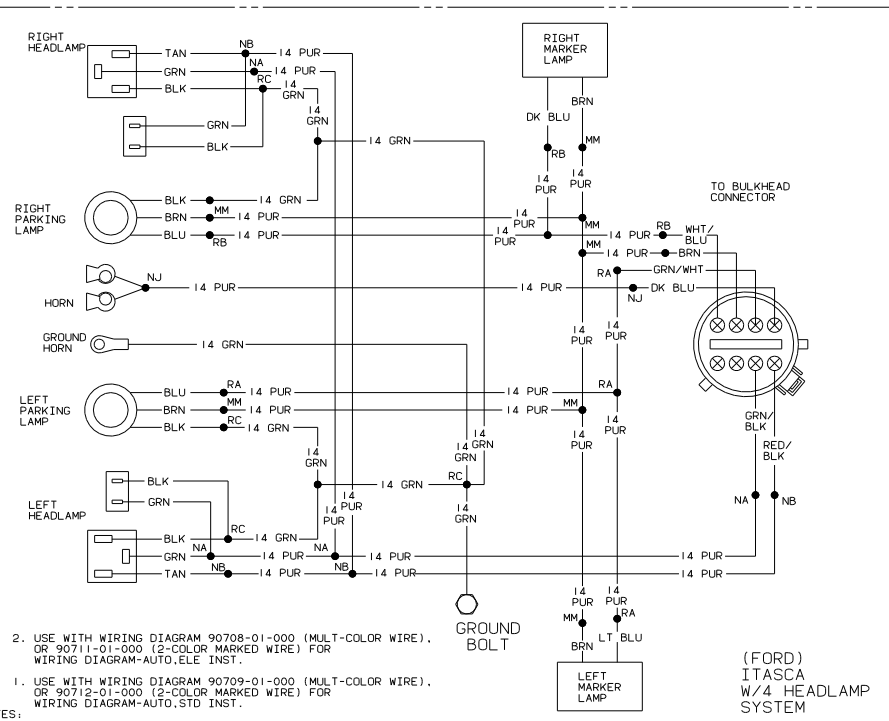

2. USE WITH WIRING DIAGRAM 90708-01-000 (MULT-COLOR WIRE), OR 90711-01-000 (2-COLOR MARKED WIRE) FOR WIRING DIAGRAM-AUTO.ELE INST.

1. USE WITH WIRING DIAGRAM 90709-01-000 (MULT-COLOR WIRE), OR 90712-01-000 (2-COLOR MARKED WIRE) FOR WIRING DIAGRAM-AUTO.STD INST.

NOTES:

(FORD)
ITASCA
W/4 HEADLAMP
SYSTEM

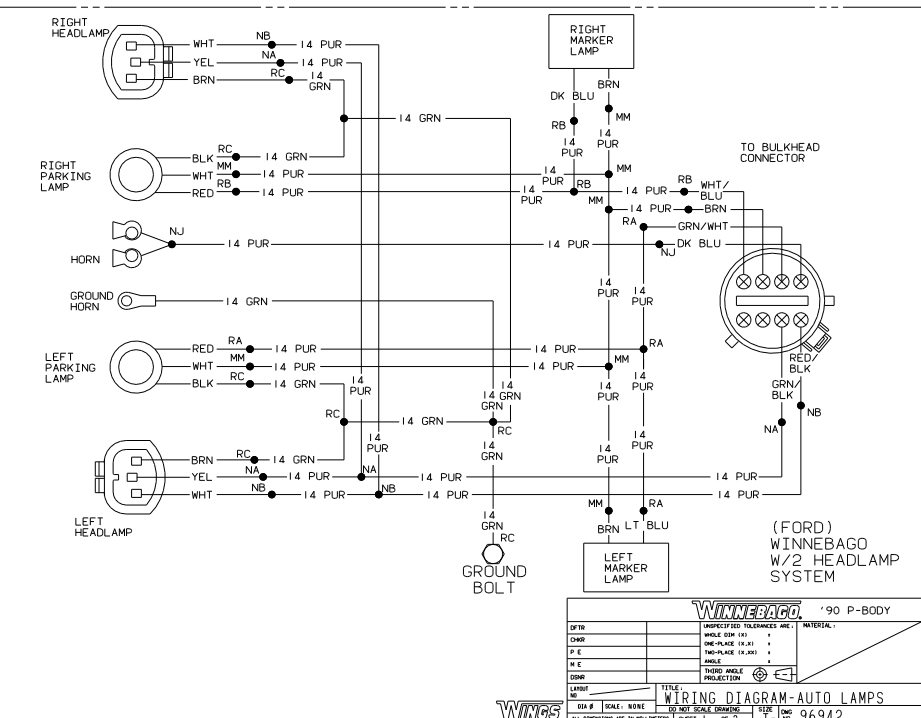

(FORD)
WINNEBAGO
W/2 HEADLAMP
SYSTEM

WINNEBAGO '90 P-BODY

DFTR	UNSPECIFIED TOLERANCES ARE:	MATERIAL:
CHKR	WHOLE DIM (X) ±	
P E	ONE-PLACE (X.X) ±	
M E	TWO-PLACE (X.XX) ±	
	ANGLE ±	
DSNR	THIRD ANGLE PROJECTION	
LAYOUT NO	TITLE: WIRING DIAGRAM-AUTO LAMPS	
DIA Ø / SCALE: NONE	DO NOT SCALE DRAWING	SIZE: I	DWG NO: 96942
ALL DIMENSIONS ARE IN MILLIMETERS	SHEET 1 OF 2	

WINGS

Copyright 2009 Winnebago Industries, Inc.

DWG NO 96942

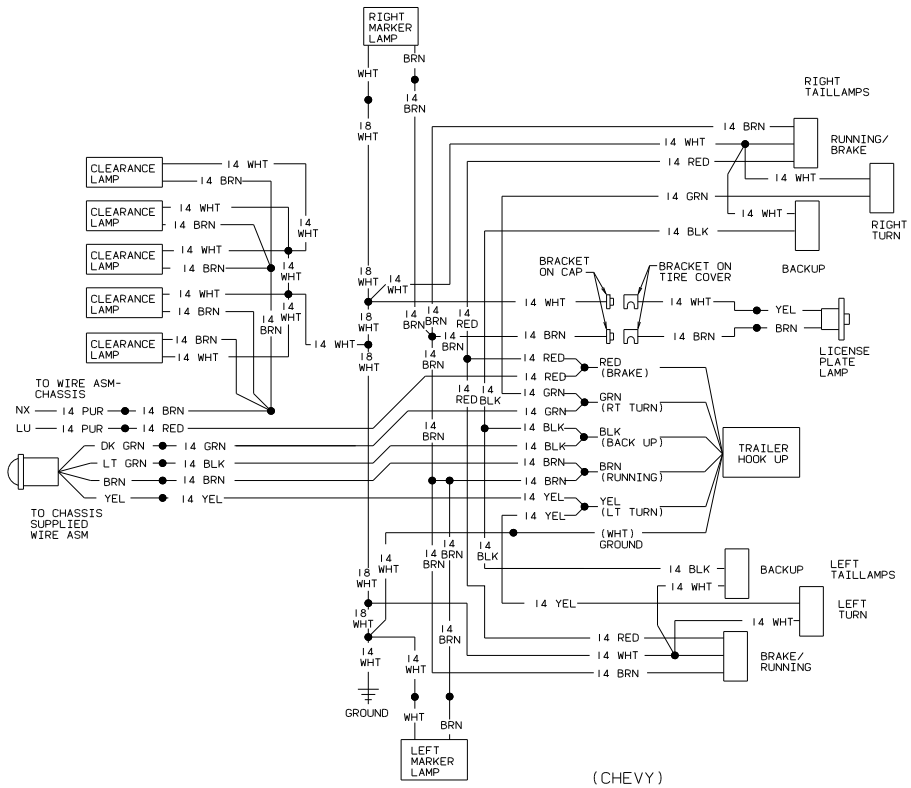

(CHEVY)
WITH REAR CAP

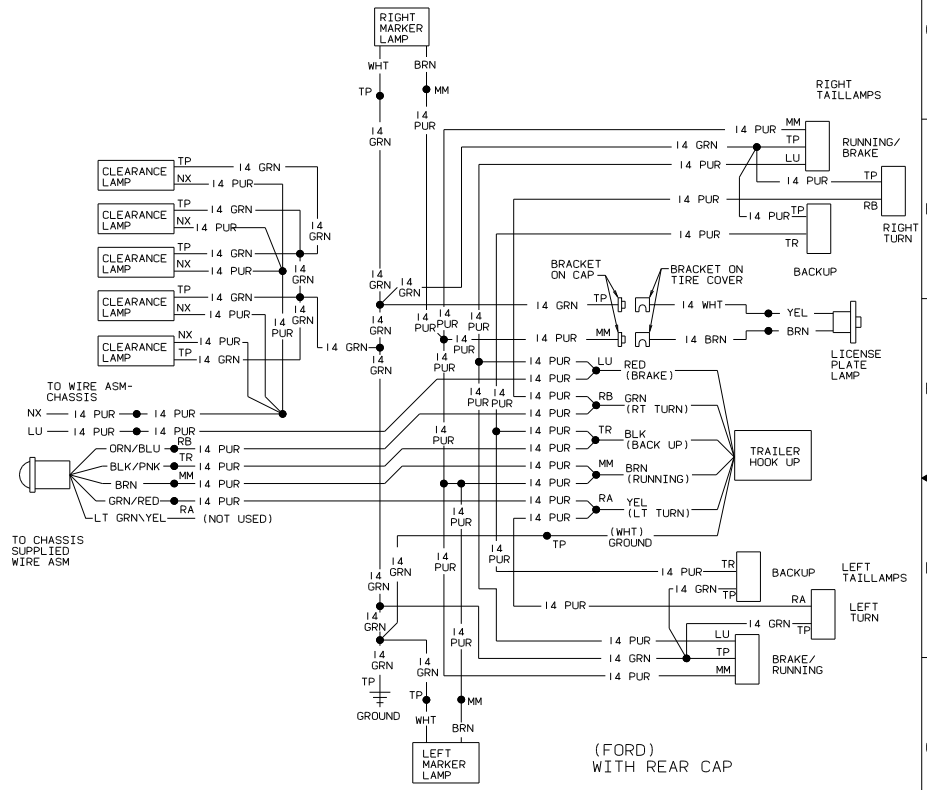

(FORD)
WITH REAR CAP

TITLE: WIRING DIAGRAM-AUTO LAMPS
DO NOT SCALE DRAWING
SHEET 2 OF 2
SIZE 1E
DWG NO 96942

Copyright 2009 Winnebago Industries, Inc.