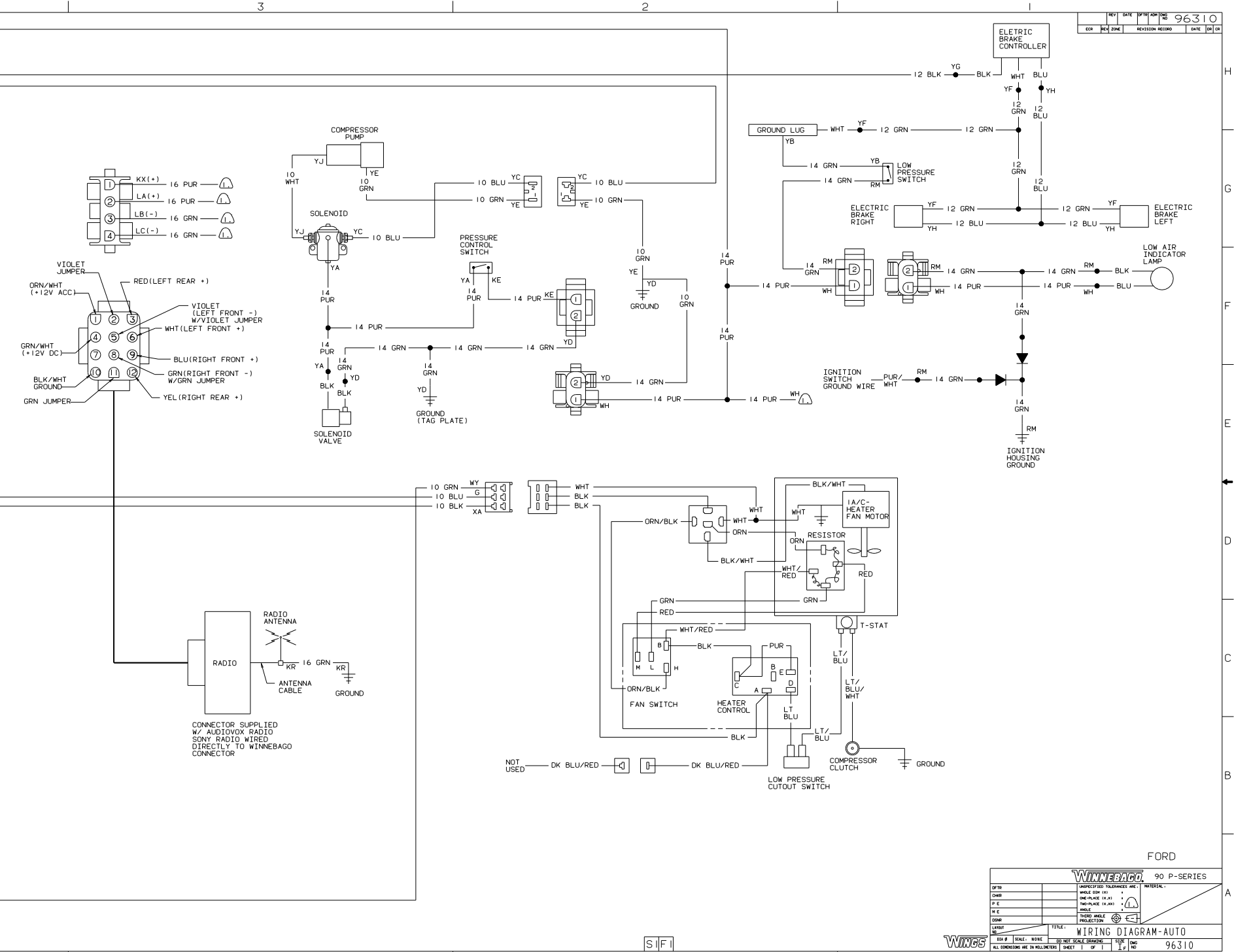

Copyright 2009 Winnebago Industries, Inc.

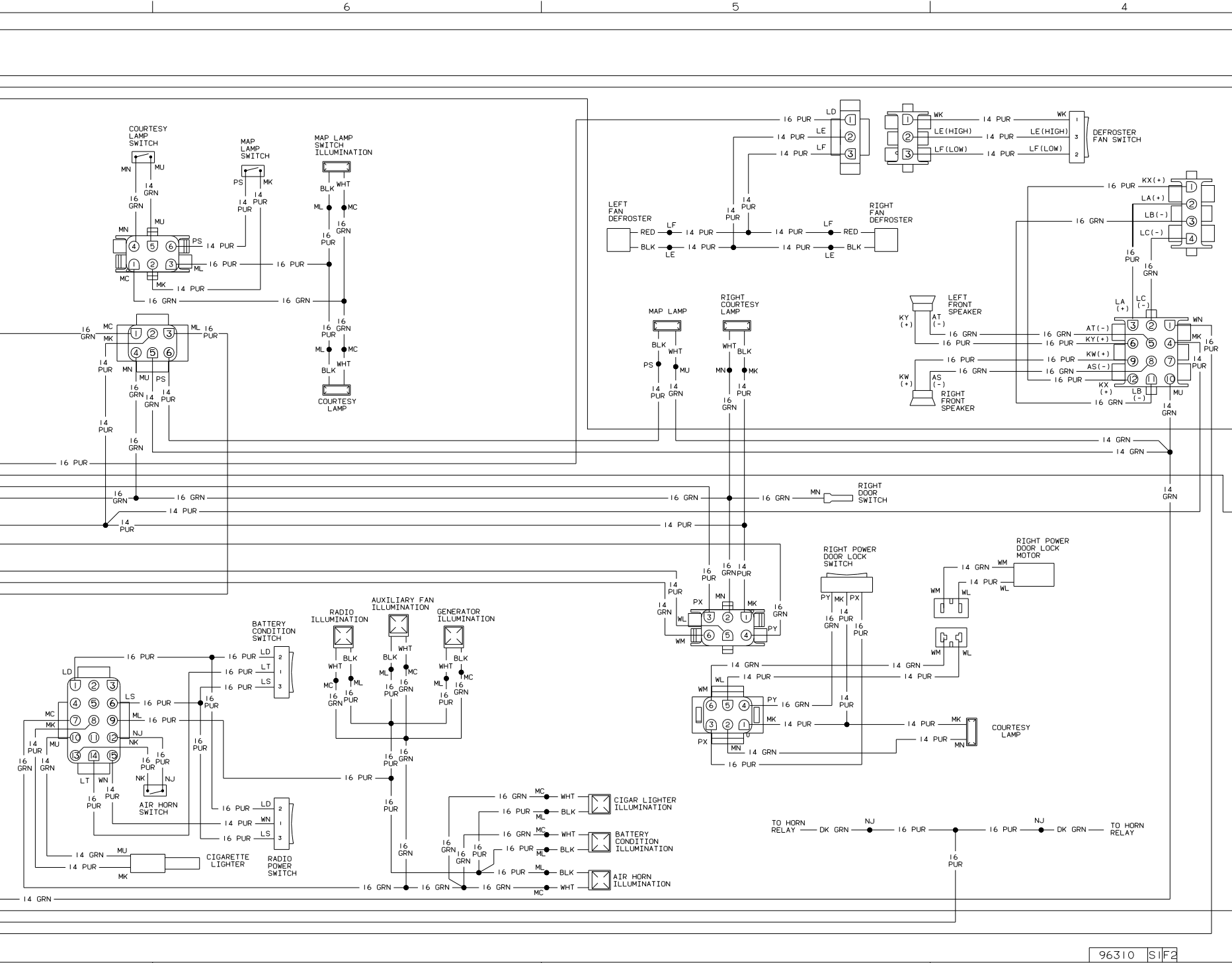

96310 S1F2

Copyright 2009 Winnebago Industries, Inc.

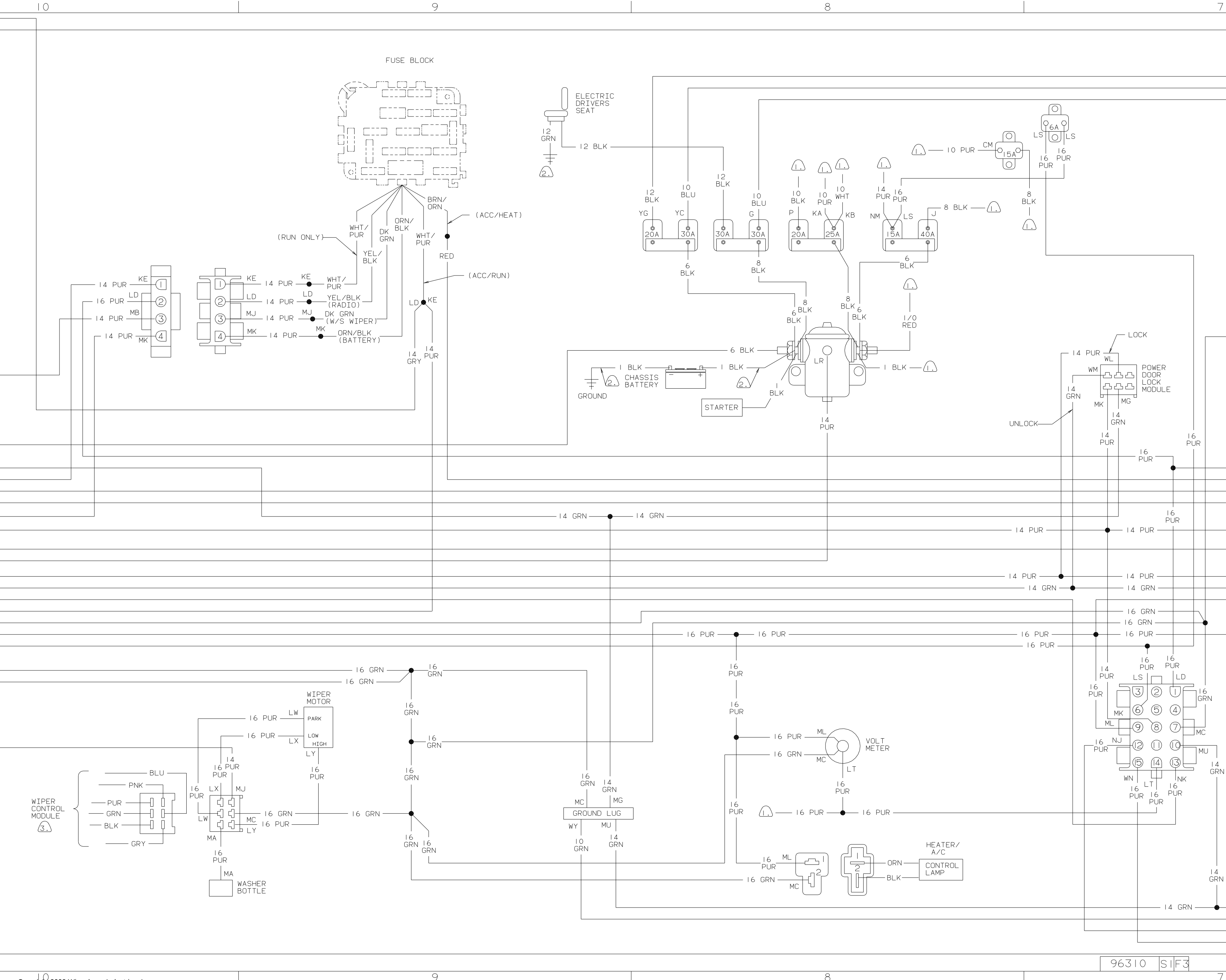

Copyright 2009 Winnebago Industries, Inc.

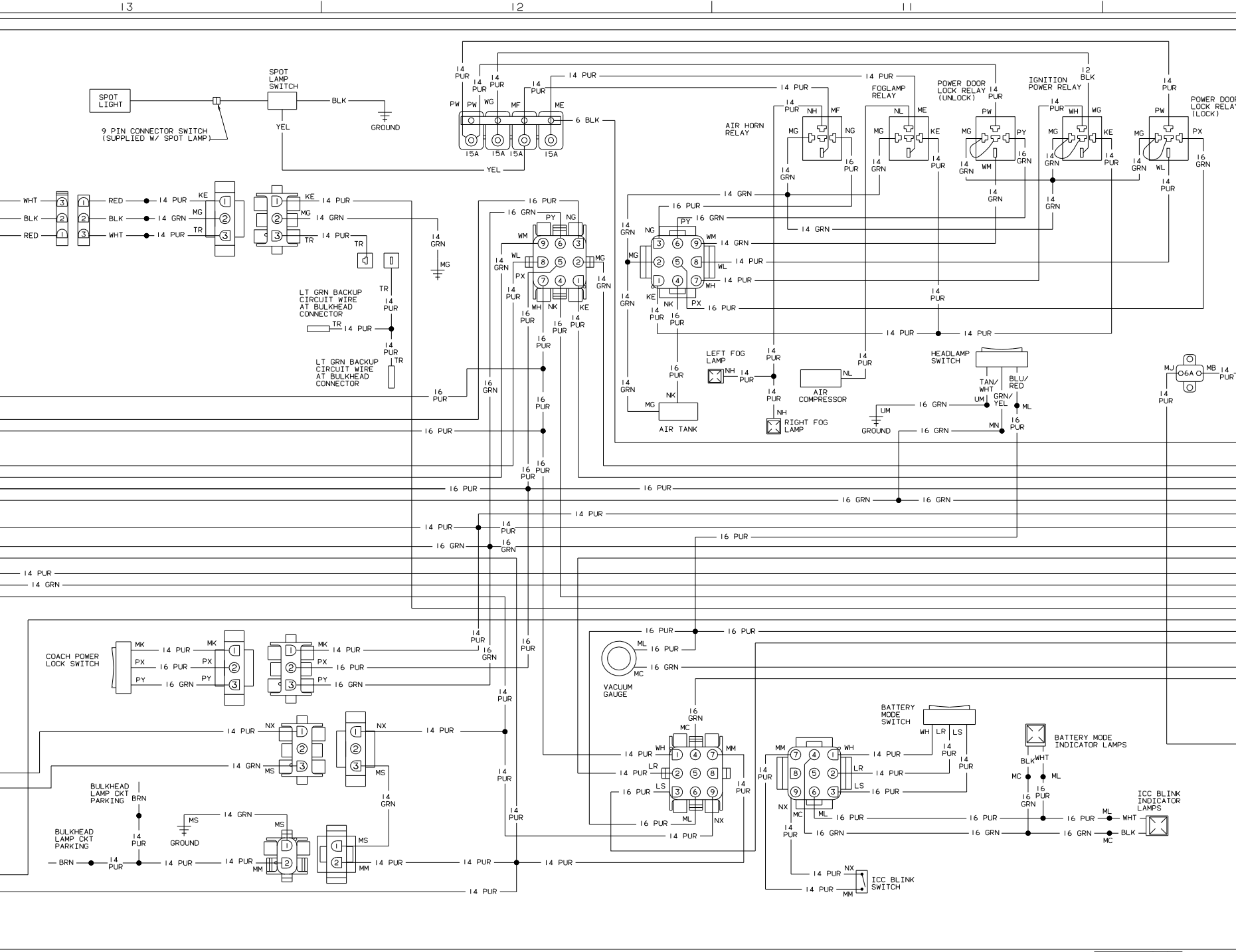

Copyright 2009 Winnebago Industries, Inc.

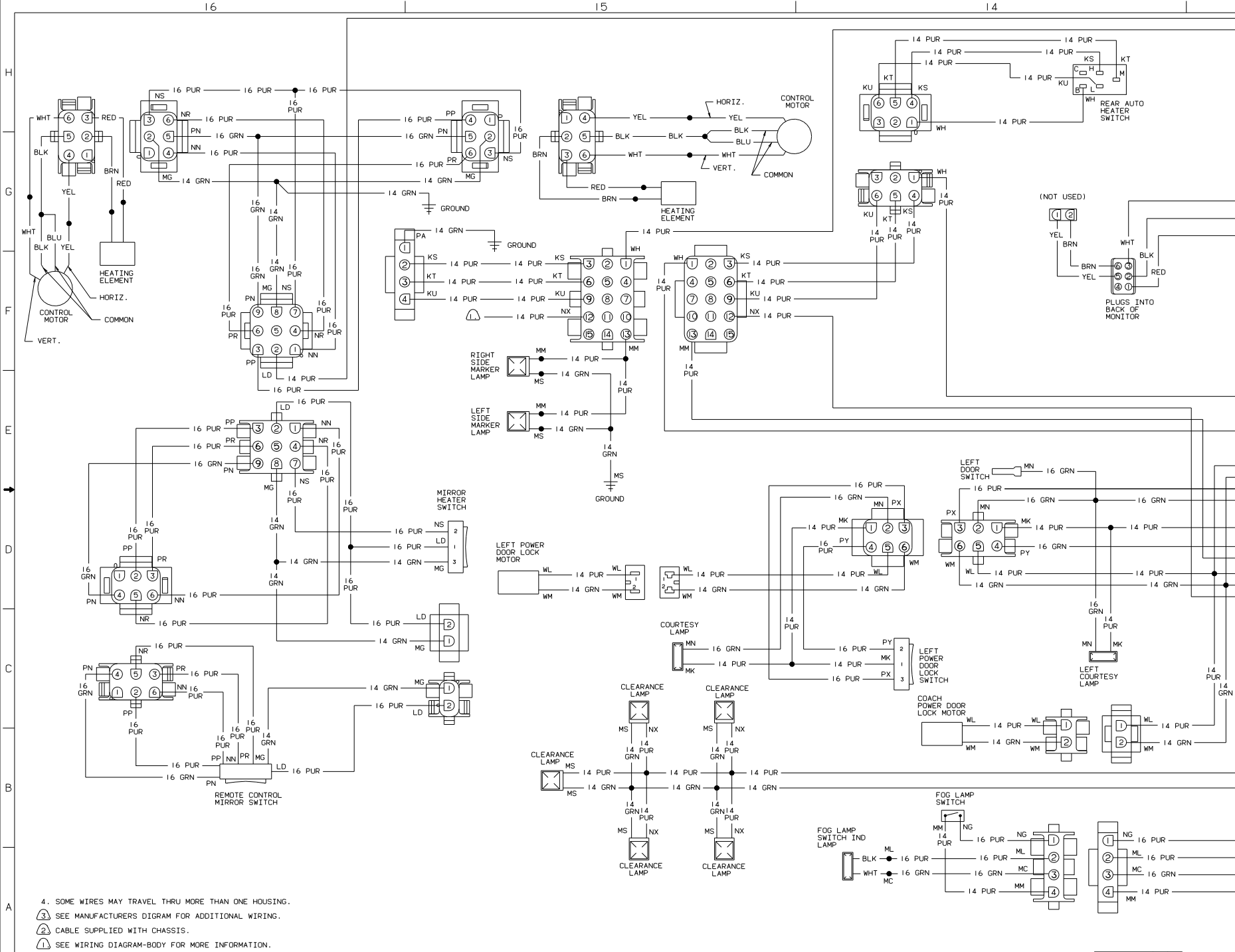

4. SOME WIRES MAY TRAVEL THRU MORE THAN ONE HOUSING.
3. SEE MANUFACTURERS DIGRAM FOR ADDITIONAL WIRING.
2. CABLE SUPPLIED WITH CHASSIS.
1. SEE WIRING DIAGRAM-BODY FOR MORE INFORMATION.

NOTES:

96310 S1F5

Copyright 2009 Winnebago Industries, Inc.